AUTHENTICATED
U.S. GOVERNMENT
INFORMATION
GPO

Federal Register

1–13–00 Thursday
Vol. 65 No. 9 Jan. 13, 2000
Pages 2017–2280

The **FEDERAL REGISTER** is published daily, Monday through Friday, except official holidays, by the Office of the Federal Register, National Archives and Records Administration, Washington, DC 20408, under the Federal Register Act (44 U.S.C. Ch. 15) and the regulations of the Administrative Committee of the Federal Register (1 CFR Ch. I). The Superintendent of Documents, U.S. Government Printing Office, Washington, DC 20402 is the exclusive distributor of the official edition.

The **Federal Register** provides a uniform system for making available to the public regulations and legal notices issued by Federal agencies. These include Presidential proclamations and Executive Orders, Federal agency documents having general applicability and legal effect, documents required to be published by act of Congress, and other Federal agency documents of public interest.

Documents are on file for public inspection in the Office of the Federal Register the day before they are published, unless the issuing agency requests earlier filing. For a list of documents currently on file for public inspection, see http://www.nara.gov/fedreg.

The seal of the National Archives and Records Administration authenticates the Federal Register as the official serial publication established under the Federal Register Act. Under 44 U.S.C. 1507, the contents of the **Federal Register** shall be judicially noticed.

The **Federal Register** is published in paper and on 24x microfiche. It is also available online at no charge as one of the databases on GPO Access, a service of the U.S. Government Printing Office.

The online edition of the **Federal Register** is issued under the authority of the Administrative Committee of the Federal Register as the official legal equivalent of the paper and microfiche editions (44 U.S.C. 4101 and 1 CFR 5.10). It is updated by 6 a.m. each day the **Federal Register** is published and it includes both text and graphics from Volume 59, Number 1 (January 2, 1994) forward.

GPO Access users can choose to retrieve online **Federal Register** documents as TEXT (ASCII text, graphics omitted), PDF (Adobe Portable Document Format, including full text and all graphics), or SUMMARY (abbreviated text) files. Users should carefully check retrieved material to ensure that documents were properly downloaded.

On the World Wide Web, connect to the **Federal Register** at http://www.access.gpo.gov/nara. Those without World Wide Web access can also connect with a local WAIS client, by Telnet to swais.access.gpo.gov, or by dialing (202) 512-1661 with a computer and modem. When using Telnet or modem, type swais, then log in as guest with no password.

For more information about GPO Access, contact the GPO Access User Support Team by E-mail at gpoaccess@gpo.gov; by fax at (202) 512–1262; or call (202) 512–1530 or 1–888–293–6498 (toll free) between 7 a.m. and 5 p.m. Eastern time, Monday–Friday, except Federal holidays.

The annual subscription price for the **Federal Register** paper edition is $555, or $607 for a combined **Federal Register,** Federal Register Index and List of CFR Sections Affected (LSA) subscription; the microfiche edition of the **Federal Register** including the Federal Register Index and LSA is $220. Six month subscriptions are available for one-half the annual rate. The charge for individual copies in paper form is $8.00 for each issue, or $8.00 for each group of pages as actually bound; or $1.50 for each issue in microfiche form. All prices include regular domestic postage and handling. International customers please add 25% for foreign handling. Remit check or money order, made payable to the Superintendent of Documents, or charge to your GPO Deposit Account, VISA, MasterCard or Discover. Mail to: New Orders, Superintendent of Documents, P.O. Box 371954, Pittsburgh, PA 15250–7954.

There are no restrictions on the republication of material appearing in the **Federal Register.**

How To Cite This Publication: Use the volume number and the page number. Example: 65 FR 12345.

SUBSCRIPTIONS AND COPIES

PUBLIC	
Subscriptions:	
Paper or fiche	**202–512–1800**
Assistance with public subscriptions	**512–1806**
General online information	**202–512–1530; 1–888–293–6498**
Single copies/back copies:	
Paper or fiche	**512–1800**
Assistance with public single copies	**512–1803**
FEDERAL AGENCIES	
Subscriptions:	
Paper or fiche	**523–5243**
Assistance with Federal agency subscriptions	**523–5243**

Printed on recycled paper.

Contents

Federal Register

Vol. 65, No. 9

Thursday, January 13, 2000

Agriculture Department
See Forest Service
NOTICES
Meetings:
21st Century Production Agriculture Commission, 2111

Architectural and Transportation Barriers Compliance Board
NOTICES
Meetings:
Passenger Vessel Access Advisory Committee, 2112

Census Bureau
NOTICES
Surveys, determinations, etc.:
Retail trade; annual, 2112–2113
Service industries; annual, 2113–2114
Trade; annual, 2114

Centers for Disease Control and Prevention
NOTICES
Grants and cooperative agreements; availability, etc.:
Human immunodeficiency virus (HIV)—
Community-based organizations; prevention projects, 2178–2185
Meetings:
Disease, Disability, and Injury Prevention and Control Special Emphasis Panels, 2185

Coast Guard
RULES
Drawbridge operations:
Mississippi River, IA and IL, 2035–2039
PROPOSED RULES
Regattas and marine parades, anchorage regulations, and ports and waterways safety:
OPSAIL 2000, San Juan, PR; exclusion areas, 2095–2097

Commerce Department
See Census Bureau
See Economic Development Administration
See International Trade Administration
See National Oceanic and Atmospheric Administration

Copyright Office, Library of Congress
NOTICES
Copyright Arbitration Royalty Panel:
Digital performance right in sound and ephemeral recordings; voluntary negotiation period initiation, 2194–2195

Defense Department
RULES
Acquisition regulations:
Institutions of higher education; Federal contracts and grants, 2056–2057
Manufacturing Technology Program, 2057–2058
Paid advertisements, 2055–2056
Utility privatization, 2058–2059
PROPOSED RULES
Acquisition regulations:
Production surveillance and reporting, 2109–2110
Transportation acquisition policy, 2104–2109
Civilian health and medical program of uniformed services (CHAMPUS):
TRICARE program—
Claimcheck denials; appeals process establishment, 2085–2095
Federal Acquisition Regulation (FAR):
Liquidated damages, 2271–2276

Economic Development Administration
RULES
Economic Development Administration Reform Act of 1998; implementation; correction, 2017

Education Department
NOTICES
Meetings:
Indian Education National Advisory Council, 2141–2142

Employment and Training Administration
PROPOSED RULES
Birth and adoption unemployment compensation, 2080–2081

Energy Department
See Energy Efficiency and Renewable Energy Office
See Federal Energy Regulatory Commission
NOTICES
Floodplain and wetlands protection; environmental review determinations; availability, etc.:
Weldon Spring Site, MO—
Groundwater interceptor trench construction, 2142–2143
Grants and cooperative agreements; availability, etc.:
University photovoltaic research, education, and collaboration, 2143
Uranium and thorium; active processing sites; reimbursement for costs of remedial action, 2143–2144
Meetings:
Environmental Management Site-Specific Advisory Board—
Oak Ridge Reservation, TN, 2144–2145

Energy Efficiency and Renewable Energy Office
RULES
Energy conservation:
Commercial and industrial equipment, energy efficiency program—
Electric motors; test procedures, labeling, and certification requirements; correction, 2227
PROPOSED RULES
Consumer products; energy conservation program:
Dishwashers; test procedures, 2077

Environmental Protection Agency
RULES
Air pollution control:
Interstate ozone transport reduction—
Nitrogen oxides budget trading program; Section 126 petitions; findings of significant contribution and rulemaking; stay extended, 2039–2042

Air quality implementation plans; approval and promulgation; various States:
California, 2052–2055, 2046–2048
Delaware, 2048–2052
West Virginia, 2042–2046
NOTICES
Agency information collection activities:
Proposed collection; comment request, 2162–2163
Meetings:
Voluntary Children's Health Chemical Testing Program; stakeholder involvement process, 2163–2164
Toxic and hazardous substances control:
Chemical testing—
Section 21 petition receipt, 2164–2165
Water pollution; discharge of pollutants (NPDES):
Texas; ready-mixed concrete plants, concrete products plants, and associated facilities; general permit, 2165–2176

Executive Office of the President
See Presidential Documents

Federal Aviation Administration
RULES
Airmen certification:
Pilots, flight instructors, and ground instructors outside U.S.; licensing and training; comments disposition, 2022–2023
Airworthiness directives:
Bombardier, 2019–2022
Eurocopter Deutschland GMBH, 2017–2019
Standard instrument approach procedures, 2023–2026
PROPOSED RULES
Air carrier certification and operations:
Antidrug program and alcohol misuse prevention program for employees of foreign air carriers engaged in specified aviation activities; withdrawn, 2079–2080
Air traffic operating and flight rules, etc.:
Automatic pressure altitude reporting (Mode C) transponders; suspension of certain aircraft operations from requirement; withdrawn, 2077–2079
NOTICES
Meetings:
RTCA, Inc., 2221–2222

Federal Communications Commission
PROPOSED RULES
Radio services, special:
Fixed microwave services—
Multiple address systems; 932/941 MHz band allocations; applications dismissal; correction, 2097–2104
NOTICES
Meetings:
Public Safety National Coordination Committee, 2176–2177

Federal Election Commission
NOTICES
Meetings; Sunshine Act, 2177

Federal Energy Regulatory Commission
NOTICES
Electric rate and corporate regulation filings:
Lake Worth Generation L.L.C. et al., 2151–2156
La Paloma Generating Trust Ltd. et al., 2149–2151
Public Service Electric & Gas Co. et al., 2156–2161
Environmental statements; notice of intent:
Algonquin Gas Transmission Corp., 2161–2162
National Register of Historic Places:
Programmatic agreement for managing properties; restricted service list—
USGen New England, Inc.; correction, 2228
Applications, hearings, determinations, etc.:
Central New York Oil & Gas Co., LLC, 2145–2146
CNG Transmission Corp., 2146
Columbia Gas Transmission Corp., 2147
Dauphin Island Gathering Partners, 2147
Eastern Shore Natural Gas Co., 2148
Pacific Gas & Electric Co., 2148
Tennessee Gas Pipeline Co., 2148–2149

Federal Highway Administration
NOTICES
Meetings:
Highway motor fuel reporting reassessment; workshops, 2222

Federal Maritime Commission
NOTICES
Agreements filed, etc., 2177
Freight forwarder licenses:
ENC New York, Inc., et al., 2177
Investigations, hearings, petitions, etc.:
Port of Houston Authority, 2177–2178

Federal Railroad Administration
PROPOSED RULES
Railroad safety:
Locomotive horns use at highway-rail grade crossings; requirement for sounding, 2229–2270
NOTICES
Exemption petitions, etc.:
National Railroad Passenger Corp. (AMTRAK), 2223

Federal Reserve System
NOTICES
Banks and bank holding companies:
Change in bank control, 2178

Financial Management Service
See Fiscal Service

Fiscal Service
RULES
Bonds and notes, U.S. Treasury:
Savings bonds; regulations governing agencies for issue, 2034–2035
NOTICES
Surety companies acceptable on Federal bonds:
British American Insurance Co., 2225
Seneca Insurance Co., Inc., 2226

Fish and Wildlife Service
NOTICES
Endangered and threatened species permit applications, 2188–2189
Environmental statements; availability, etc.:
Incidental take permits—
Bastrop County, TX; Houston toad, 2189
Pipeline right-of-way applications:
Mississippi, 2189–2190

Forest Service
NOTICES
Environmental statements; notice of intent:
Custer National Forest, MT, 2111–2112
White Mountain National Forest, NH, 2112

General Services Administration
PROPOSED RULES
Federal Acquisition Regulation (FAR):
Liquidated damages, 2271–2276

Geological Survey
NOTICES
Agency information collection activities:
Proposed collection; comment request, 2190

Health and Human Services Department
See Centers for Disease Control and Prevention
See Health Care Financing Administration
See Substance Abuse and Mental Health Services Administration

Health Care Financing Administration
NOTICES
Agency information collection activities:
Submission for OMB review; comment request, 2186–2187

Interior Department
See Fish and Wildlife Service
See Geological Survey
See Land Management Bureau
See Minerals Management Service

Internal Revenue Service
RULES
Income taxes:
Hyperinflationary, nonfunctional currency transactions and notional principal contracts; taxation of gain or loss, 2026–2030
Procedure and administration:
Tax exempt organizations; private foundation public disclosure requirements, 2030–2034
PROPOSED RULES
Income taxes:
Hyperinflationary currency; definition, 2084–2085
Partnership debt allocation, 2081–2084
NOTICES
Agency information collection activities:
Proposed collection; comment request; correction, 2228

International Trade Administration
NOTICES
Antidumping:
Industrial nitrocellulose from—
Korea, 2115–2116
Stainless steel butt-weld pipe fittings from—
Taiwan, 2116–2139
Stainless steel wire rod from—
Korea, 2139–2140
Antidumping and countervailing duties:
Administrative review requests, 2114–2115
Showcase exhibition of exported U.S. products and services at ITA headquarters, 2140

Justice Department
See Justice Programs Office

Justice Programs Office
NOTICES
Agency information collection activities:
Proposed collection; comment request, 2193

Labor Department
See Employment and Training Administration
NOTICES
North American Agreement on Labor Cooperation:
Association of Flight Attendants, AFL-CIO, and Association of Flight Attendants of Mexico; Submission No. 9901 review, 2193–2194

Land Management Bureau
NOTICES
Closure of public lands:
Oregon, 2190–2191
Resource management plans, etc.:
Billings Resource Area, Pryor Mountain Wild Horse Range, MT; herd area management plan, 2191

Library of Congress
See Copyright Office, Library of Congress

Maritime Administration
NOTICES
Agency information collection activities:
Submission for OMB review; comment request, 2223–2224
Committees; establishment, renewal, termination, etc.:
Marine Transportation System National Advisory Council, 2224

Minerals Management Service
NOTICES
Outer Continental Shelf operations:
Gulf of Mexico—
Leasing maps and official protraction diagrams, 2191–2193

National Aeronautics and Space Administration
PROPOSED RULES
Federal Acquisition Regulation (FAR):
Liquidated damages, 2271–2276
NOTICES
Meetings:
Advisory Council
Life and Microgravity Sciences and Applications Advisory Committee, 2195–2196
Minority Business Resource Advisory Committee, 2196

National Highway Traffic Safety Administration
RULES
Anthropomorphic test devices;
Occupant crash protection
Hybrid III test dummies; 6-year-old child dummy; design and performance specifications, 2059–2075

National Oceanic and Atmospheric Administration
RULES
Fishery conservation and management:
Atlantic highly migratory species—
Atlantic bluefin tuna, 2075–2076
NOTICES
Meetings:
Western Pacific Fishery Management Council, 2140–2141

National Science Foundation
NOTICES
Meetings:
Alan T. Waterman Award Committee, 2196
Biological Sciences Special Emphasis Panel, 2196–2197
Computing-Communications Research Special Emphasis Panel, 2197
Electrical and Communications Systems Special Emphasis Panel, 2197–2198
Graduate Education Special Emphasis Panel, 2198
Mathematical Sciences Special Emphasis Panel, 2198–2199

Nuclear Regulatory Commission
NOTICES
Environmental statements; availability, etc.:
FirstEnergy Nuclear Operating Co., 2201–2203
Meetings:
Reactor Safeguards Advisory Committee, 2204
Applications, hearings, determinations, etc.:
Indiana Michigan Power Co., 2199–2200
Virginia Electric & Power Co., 2201

Presidential Documents
ADMINISTRATIVE ORDERS
Defense, national; exports of high-performance computers and transfers of militarily sensitive technology (Memorandum of January 5, 2000), 2277–2279

Public Debt Bureau
See Fiscal Service

Public Health Service
See Centers for Disease Control and Prevention
See Substance Abuse and Mental Health Services Administration

Securities and Exchange Commission
NOTICES
Agency information collection activities:
Proposed collection; comment request, 2204–2205
Self-regulatory organizations; proposed rule changes:
Chicago Stock Exchange, Inc., 2205–2207
National Association of Securities Dealers, Inc., 2207–2215
Philadelphia Stock Exchange, Inc., 2215–2218
Stock Clearing Corp. of Philadelphia, 2218–2220

State Department
NOTICES
Munitions export licenses; suspension, revocation, etc.:
China National Aero-Technology Import & Export Corp. et al., 2220–2221

Substance Abuse and Mental Health Services Administration
NOTICES
Agency information collection activities:
Proposed collection; comment request, 2187–2188

Surface Transportation Board
NOTICES
Motor carriers:
Control exemptions—
RailAmerica, Inc., 2224

Transportation Department
See Coast Guard
See Federal Aviation Administration
See Federal Highway Administration
See Federal Railroad Administration
See Maritime Administration
See National Highway Traffic Safety Administration
See Surface Transportation Board

Treasury Department
See Fiscal Service
See Internal Revenue Service
NOTICES
Meetings:
Customs Service Commercial Operations Advisory Committee, 2224–2225

Separate Parts In This Issue

Part II
Department of Transportation, Federal Railroad Administration, 2229–2270

Part III
Department of Defense, General Services Administration, National Aeronautics and Space Administration, 2271–2276

Part IV
The President, 2277–2279

Reader Aids
Consult the Reader Aids section at the end of this issue for phone numbers, online resources, finding aids, reminders, and notice of recently enacted public laws.

CFR PARTS AFFECTED IN THIS ISSUE

A cumulative list of the parts affected this month can be found in the Reader Aids section at the end of this issue.

3 CFR

Administration Orders:

Memorandums:

January 5, 2000.....2279

10 CFR

431.....2227

Proposed Rules:

430.....2077

13 CFR

305.....2017

14 CFR

39 (2 documents) 2017, 2019

61.....2022

67.....2022

97 (2 documents) 2023, 2025

141.....2022

142.....2022

Proposed Rules:

91.....2077

121.....2079

129.....2079

20 CFR

Proposed Rules:

604.....2080

26 CFR

1.....2026

301.....2030

602.....2030

Proposed Rules:

1 (2 documents) 2081, 2084

31 CFR

317.....2034

32 CFR

Proposed Rules:

199.....2085

33 CFR

117 (3 documents) 2035, 2036, 2038

Proposed Rules:

100.....2095

110.....2095

165.....2095

40 CFR

52 (5 documents) 2039, 2042, 2046, 2048, 2052

47 CFR

Proposed Rules:

1.....2097

22.....2097

101.....2097

48 CFR

205.....2055

209.....2056

235.....2057

241.....2058

243.....2056

252.....2056

253.....2055

Proposed Rules:

11.....2272

22.....2272

36.....2272

49.....2272

52.....2272

212.....2104

242 (2 documents) 2104, 2109

247.....2104

252.....2104

253.....2109

49 CFR

572.....2059

Proposed Rules:

222.....2230

229.....2230

50 CFR

635.....2075

Rules and Regulations

Federal Register

Vol. 65, No. 9

Thursday, January 13, 2000

This section of the FEDERAL REGISTER contains regulatory documents having general applicability and legal effect, most of which are keyed to and codified in the Code of Federal Regulations, which is published under 50 titles pursuant to 44 U.S.C. 1510.

The Code of Federal Regulations is sold by the Superintendent of Documents. Prices of new books are listed in the first FEDERAL REGISTER issue of each week.

DEPARTMENT OF COMMERCE

Economic Development Administration

13 CFR Part 305

[Docket No. 990106003–0009–04]

RIN 0610–AA56

Economic Development Administration Regulations: Revision To Implement Economic Development Reform Act of 1998

AGENCY: Economic Development Administration (EDA), Commerce.

ACTION: Final rule; correction.

SUMMARY: The Economic Development Administration (EDA) published in the **Federal Register** of December 14, 1999, a final rule to implement its new authorizing legislation. Inadvertently, the preamble and the rule are inconsistent and the rule needs to be corrected to state explicitly that the appendix to 13 CFR part 305, published in EDA's interim-final rule in the **Federal Register** of February 3, 1999, has been removed. This document corrects the inconsistency by explicitly removing the appendix to 13 CFR part 305.

DATES: Effective on December 14, 1999.

FOR FURTHER INFORMATION CONTACT: Edward M. Levin, Chief Counsel, Telephone Number 202–482–4687, fax 202–482–5671, e-mail *elevin@doc.gov*

SUPPLEMENTARY INFORMATION: EDA published in the **Federal Register** of December 14, 1999, (64 FR 69867) a final rule to implement its new authorizing legislation, the Public Works and Economic Development Administration Reform Act of 1998, Pub. L. 105–393. Inadvertently, the preamble and the rule itself, are inconsistent: the preamble at 64 FR 69870 states that the appendix to part 305 is removed; the body of the final rule does not explicitly remove the appendix to 13 CFR part 305, published as EDA's interim-final rule in the **Federal Register** on February 3, 1999, (64 FR 5347). This document corrects the inconsistency by explicitly removing the appendix to 13 CFR part 305 published in the interim-final rule published on February 3, 1999.

Need for Correction

Accordingly, 13 CFR part 305 is corrected by making the following correcting amendment.

1. The authority citation for part 305 continues to read as follows:

Authority: 42 U.S.C. 3211; Department of Commerce Organization Order 10–4.

Appendix A to Part 305—[Removed]

2. Appendix A to part 305 is removed.

Dated: January 7, 2000.

Chester J. Straub, Jr.,

Acting Assistant Secretary for Economic Development.

[FR Doc. 00–793 Filed 1–12–00; 8:45 am]

BILLING CODE 3510–24–M

DEPARTMENT OF TRANSPORTATION

Federal Aviation Administration

14 CFR Part 39

[Docket No. 99–SW–60–AD; Amendment 39–11509; AD 2000–01–11]

RIN 2120–AA64

Airworthiness Directives; Eurocopter Deutschland GMBH Model MBB–BK 117 Helicopters

AGENCY: Federal Aviation Administration, DOT.

ACTION: Final rule; request for comments.

SUMMARY: This amendment supersedes an existing emergency priority letter airworthiness directive (AD), applicable to Eurocopter Deutschland GMBH (ECD) Model MBB–BK 117 helicopters, that currently requires, before further flight, creating a component log card or equivalent record and determining the age and number of flights on the tension-torsion (TT) strap. The AD also requires inspecting and removing, as necessary, certain unairworthy TT straps. This amendment requires the same actions as the emergency priority letter AD but clarifies the compliance requirements specified in the emergency priority letter AD. This amendment is prompted by an accident in which a main rotor blade (blade) separated from a helicopter due to fatigue failure of a TT strap. The actions specified by this AD are intended to prevent failure of a TT strap, loss of a blade, and subsequent loss of control of the helicopter.

DATES: Effective January 28, 2000. The incorporation by reference of certain publications listed in the regulations is approved by the Director of the Federal Register as of January 28, 2000.

Comments for inclusion in the Rules Docket must be received on or before March 13, 2000.

ADDRESSES: Submit comments in triplicate to the Federal Aviation Administration (FAA), Office of the Regional Counsel, Southwest Region, Attention: Rules Docket No. 99–SW–60–AD, 2601 Meacham Blvd., Room 663, Fort Worth, Texas 76137.

The service information referenced in this AD may be obtained from American Eurocopter Corporation, 2701 Forum Drive, Grand Prairie, Texas 75053–4005, telephone (972) 641–3460, fax (972) 641–3527. This information may be examined at the FAA, Office of the Regional Counsel, Southwest Region, 2601 Meacham Blvd., Room 663, Fort Worth, Texas 76137; or at the Office of the Federal Register, 800 North Capitol Street, NW., suite 700, Washington, DC.

FOR FURTHER INFORMATION CONTACT: Charles Harrison, Aerospace Engineer, FAA, Rotorcraft Directorate, Rotorcraft Standards Staff, 2601 Meacham Blvd., Fort Worth, Texas 76137, telephone (817) 222–5128, fax (817) 222–5961.

SUPPLEMENTARY INFORMATION: On August 6, 1999, the FAA issued Emergency Priority Letter AD 99–17–07, applicable to ECD Model MBB–BK 117 helicopters, which requires, before further flight, creating a component log card or equivalent record and determining the calendar age and number of flights on the TT strap. The AD also requires inspecting and removing, as necessary, certain unairworthy TT straps. Certain TT straps are not eligible for installation until they are re-identified. That action was prompted by an accident in which a blade separated from an ECD Model MBB–BK–117 helicopter resulting in three fatalities. The cause of the blade separation was a TT strap rupture within the main rotor head. The cause of the TT strap rupture remains under

investigation. That condition, if not corrected, could result in failure of a TT strap, loss of a blade, and subsequent loss of control of the helicopter.

Since the issuance of that emergency priority letter AD, the FAA has received several requests for clarification of the terms ''calendar year'' and ''calendar age.'' To clarify the required compliance times, the FAA has converted years to months and has removed the terms ''calendar year'' and ''calendar age'' from the AD.

The FAA has reviewed ECD Alert Service Bulletin MBB–BK 117 No. ASB–MBB–BK 117–10–120, Revision 1, dated August 31, 1999 (ASB). The ASB describes procedures for determining the total accumulated installation time and number of flights on the TT strap. The ASB specifies inspecting each TT strap and replacing any unairworthy TT strap with an airworthy TT strap. The Luftfahrt-Bundesamt (LBA), which is the airworthiness authority for the Federal Republic of Germany, classified that ASB as mandatory and issued AD 1999–284, dated August 6, 1999, applicable to all ECD Model MBB–BK 117 helicopters.

Since an unsafe condition has been identified that is likely to exist or develop on other ECD Model MBB–BK 117 helicopters of the same type design, this AD supersedes Emergency Priority Letter AD 99–17–07 to require, before further flight, creating a component log card or equivalent record and determining the age and number of flights on each TT strap. The AD also requires inspecting and removing, as necessary, any unairworthy TT straps. Certain TT straps are not eligible for installation until they are reidentified. The actions must be accomplished in accordance with the ASB described previously. The short compliance time involved is required because the previously described critical unsafe condition can adversely affect the structural integrity of the helicopter. Therefore, creating a component log card or equivalent record, determining the age and number of flights on each TT strap, and inspecting and removing, as necessary, any unairworthy TT straps are required prior to further flight, and this AD must be issued immediately.

Since a situation exists that requires the immediate adoption of this regulation, it is found that notice and opportunity for prior public comment hereon are impracticable, and that good cause exists for making this amendment effective in less than 30 days.

The FAA estimates that 127 helicopters of U.S. registry will be affected by this AD, that it will take approximately 1 work hour per helicopter to inspect the 4 TT straps on each helicopter, 15 work hours per helicopter to remove and replace the 4 TT straps, if necessary, and the average labor rate is $60 per work hour. Required parts will cost approximately $2,600 per TT strap ($10,400 per helicopter). Based on these figures, the total cost impact of the AD on U.S. operators is estimated to be $1,442,720; $7,620 to inspect each helicopter once and $1,435,100 to remove and replace the 4 TT straps on all helicopters.

Comments Invited

Although this action is in the form of a final rule that involves requirements affecting flight safety and, thus, was not preceded by notice and an opportunity for public comment, comments are invited on this rule. Interested persons are invited to comment on this rule by submitting such written data, views, or arguments as they may desire. Communications should identify the Rules Docket number and be submitted in triplicate to the address specified under the caption **ADDRESSES.** All communications received on or before the closing date for comments will be considered, and this rule may be amended in light of the comments received. Factual information that supports the commenter's ideas and suggestions is extremely helpful in evaluating the effectiveness of the AD action and determining whether additional rulemaking action would be needed.

Comments are specifically invited on the overall regulatory, economic, environmental, and energy aspects of the rule that might suggest a need to modify the rule. All comments submitted will be available, both before and after the closing date for comments, in the Rules Docket for examination by interested persons. A report that summarizes each FAA-public contact concerned with the substance of this AD will be filed in the Rules Docket.

Commenters wishing the FAA to acknowledge receipt of their comments submitted in response to this rule must submit a self-addressed, stamped postcard on which the following statement is made: ''Comments to Docket No. 99–SW–60–AD.'' The postcard will be date stamped and returned to the commenter.

The regulations adopted herein will not have a substantial direct effect on the States, on the relationship between the national Government and the States, or on the distribution of power and responsibilities among the various levels of government. Therefore, it is determined that this final rule does not have federalism implications under Executive Order 13132.

The FAA has determined that this regulation is an emergency regulation that must be issued immediately to correct an unsafe condition in aircraft, and that it is not a ''significant regulatory action'' under Executive Order 12866. It has been determined further that this action involves an emergency regulation under DOT Regulatory Policies and Procedures (44 FR 11034, February 26, 1979). If it is determined that this emergency regulation otherwise would be significant under DOT Regulatory Policies and Procedures, a final regulatory evaluation will be prepared and placed in the Rules Docket. A copy of it, if filed, may be obtained from the Rules Docket at the location provided under the caption **ADDRESSES.**

List of Subjects in 14 CFR Part 39

Air transportation, Aircraft, Aviation safety, Incorporation by reference, Safety.

Adoption of the Amendment

Accordingly, pursuant to the authority delegated to me by the Administrator, the Federal Aviation Administration amends part 39 of the Federal Aviation Regulations (14 CFR part 39) as follows:

PART 39—AIRWORTHINESS DIRECTIVES

1. The authority citation for part 39 continues to read as follows:

Authority: 49 U.S.C. 106(g), 40113, 44701.

§ 39.13 [Amended]

2. Section 39.13 is amended by adding a new airworthiness directive (AD) to read as follows:

AD 2000–01–11 Eurocopter Deutschland GMBH: Amendment 39–11509. Docket No. 99–SW–60–AD. Supersedes Emergency Priority Letter AD 99–17–07, Docket No. 99–SW–49–AD.

Applicability: Model MBB–BK 117 A–1, A–3, A–4, B–1, B–2, and C–1 helicopters, certificated in any category.

Note 1: This AD applies to each helicopter identified in the preceding applicability provision, regardless of whether it has been otherwise modified, altered, or repaired in the area subject to the requirements of this AD. For helicopters that have been modified, altered, or repaired so that the performance of the requirements of this AD is affected, the owner/operator must request approval for an alternative method of compliance in accordance with paragraph (f) of this AD. The request should include an assessment of the effect of the modification, alteration, or repair on the unsafe condition addressed by this AD; and, if the unsafe condition has not been

eliminated, the request should include specific proposed actions to address it.

Compliance: Required as indicated, unless accomplished previously.

To prevent main rotor blade (blade) separation due to failure of a tension-torsion (TT) strap, accomplish the following:

(a) Before further flight,

(1) Create a component log card or equivalent record for each TT strap.

(2) Review the history of the helicopter and each TT strap. Determine the age since initial installation on any helicopter (age) and the number of flights on each TT strap. Enter both the age and the number of flights for each TT strap on the component log card or equivalent record. Where the number of flights is unknown, multiply the number of hours time-in-service (TIS) by 5 to determine the number of flights.

(3) If the number of flights and age cannot be determined, remove the TT strap from service.

(4) Remove any TT strap from service that has either accumulated 25,000 or more flights or is equal to or greater than 180 months of age.

(b) When a TT strap age is equal to or greater than 120 months and less than 180 months and the number of flights on the TT straps are less than 25,000, inspect the TT strap in accordance with paragraph 2.B.2 of the ''Accomplishment Instructions,'' Eurocopter Deutschland GMBH Alert Service Bulletin MBB–BK 117 No. ASB–MBB–BK 117–10–120 (ASB), Revision 1, dated August 31, 1999, according to the following:

(1) If the age is greater than or equal to 120 months but less than 132 months and has less than 22,000 flights, inspect the TT strap within the next 6 weeks. If the number of flights equals or exceeds 22,000, inspect the TT strap before further flight.

(2) If the age is greater than or equal to 132 months but less than 144 months and has less than 19,000 flights, inspect the TT strap within the next 5 weeks. If the number of flights equals or exceeds 19,000, inspect the TT strap before further flight.

(3) If the age is greater than or equal to 144 months but less than 156 months and has less than 16,000 flights, inspect the TT strap within the next 4 weeks. If the number of flights equals or exceeds 16,000, inspect the TT strap before further flight.

(4) If the age is greater than or equal to 156 months but less than 168 months and has less than 13,000 flights, inspect the TT strap within the next 3 weeks. If the number of flights equals or exceeds 13,000, inspect the TT strap before further flight.

(5) If the age is greater than or equal to 168 months but less than 180 months and has less than 10,000 flights, inspect the TT strap within the next 2 weeks. If the number of flights equals or exceeds 10,000, inspect the TT strap before further flight.

Remove any TT strap from service before exceeding the allowable number of flights or 180 months, whichever occurs first.

(c) If a defect is found as a result of the inspection, remove the TT strap from service prior to further flight.

(d) If no defect is found as a result of the inspection in paragraph (b), a maximum of 500 flights is permitted on a one-time basis before the TT strap must be replaced, provided the limits of paragraphs (a)(4) and (b) are not exceeded.

(e) TT straps, part number (P/N) 2604067 or J17322–1, are not eligible for installation. Prior to installation, P/N 2604067 or J17322–1 must be re-identified according to paragraph 2.B.1 of the ''Accomplishment Instructions'' of the ASB, Revision 1, dated August 31, 1999.

(f) An alternative method of compliance or adjustment of the compliance time that provides an acceptable level of safety may be used if approved by the Manager, Regulations Group, FAA. Operators shall submit their requests through an FAA Principal Maintenance Inspector, who may concur or comment and then send it to the Manager, Regulations Group.

Note 2: Information concerning the existence of approved alternative methods of compliance with this AD, if any, may be obtained from the Regulations Group.

(g) Special flight permits may be issued for up to five flights in accordance with sections 21.197 and 21.199 of the Federal Aviation Regulations (14 CFR 21.197 and 21.199) to operate the helicopter to a location where the requirements of this AD can be accomplished.

(h) The inspections and re-identification of TT straps shall be done in accordance with the ''Accomplishment Instructions,'' paragraph 2.B.1 and 2.B.2, of Eurocopter Deutschland GMBH Alert Service Bulletin MBB–BK 117 No. ASB–MBB–BK 117–10–120, Revision 1, dated August 31, 1999. This incorporation by reference was approved by the Director of the Federal Register in accordance with 5 U.S.C. 552(a) and 1 CFR part 51. Copies may be obtained from American Eurocopter Corporation, 2701 Forum Drive, Grand Prairie, Texas 75053–4005, telephone (972) 641–3460, fax (972) 641–3527. Copies may be inspected at the FAA, Office of the Regional Counsel, Southwest Region, 2601 Meacham Blvd., Room 663, Fort Worth, Texas; or at the Office of the Federal Register, 800 North Capitol Street, NW., suite 700, Washington, DC.

(i) This amendment becomes effective on January 28, 2000.

Note 3: The subject of this AD is addressed in Luftfahrt-Bundesamt (LBA), Federal Republic of Germany, AD 1999–284, dated August 6, 1999.

Issued in Fort Worth, Texas, on January 5, 2000.

Henry A. Armstrong,

Manager, Rotorcraft Directorate, Aircraft Certification Service.

[FR Doc. 00–721 Filed 1–12–00; 8:45 am]

BILLING CODE 4910–13–P

DEPARTMENT OF TRANSPORTATION

Federal Aviation Administration

14 CFR Part 39

[Docket No. 98–NM–192–AD; Amendment 39–11510; AD 2000–01–12]

RIN 2120–AA64

Airworthiness Directives; Bombardier Model CL–600–2B19 (Regional Jet Series 100) Series Airplanes

AGENCY: Federal Aviation Administration, DOT.

ACTION: Final rule.

SUMMARY: This amendment supersedes an existing airworthiness directive (AD), applicable to certain Bombardier Model CL–600–2B19 (Regional Jet Series 100 and 200) series airplanes, that currently requires repetitive inspections to detect cracks of a certain bulkhead web of the fuselage at certain locations, and repair, if necessary. This amendment revises the repetitive inspection intervals for certain airplanes, and requires modification or repair, as applicable. This amendment is prompted by the development of a modification that will adequately address the identified unsafe condition. The actions specified by this AD are intended to detect and correct fatigue cracking, which could result in uncontrolled depressurization of the airplane and/or reduced structural integrity of the fuselage.

DATES: Effective February 17, 2000.

The incorporation by reference of certain publications listed in the regulations is approved by the Director of the Federal Register as of February 17, 2000.

ADDRESSES: The service information referenced in this AD may be obtained from Bombardier, Inc., Canadair, Aerospace Group, P.O. Box 6087, Station Centre-ville, Montreal, Quebec H3C 3G9, Canada. This information may be examined at the Federal Aviation Administration (FAA), Transport Airplane Directorate, Rules Docket, 1601 Lind Avenue, SW., Renton, Washington; or at the FAA, Engine and Propeller Directorate, New York Aircraft Certification Office, 10 Fifth Street, Third Floor, Valley Stream, New York; or at the Office of the Federal Register, 800 North Capitol Street, NW., suite 700, Washington, DC.

FOR FURTHER INFORMATION CONTACT: George Duckett, Aerospace Engineer, Airframe and Propulsion Branch, ANE–171, FAA, Engine and Propeller Directorate, New York Aircraft Certification Office, 10 Fifth Street, Third Floor, Valley Stream, New York

11581; telephone (516) 256–7525; fax (516) 568–2716.

SUPPLEMENTARY INFORMATION: A proposal to amend part 39 of the Federal Aviation Regulations (14 CFR part 39) by superseding AD 97–14–11, amendment 39–10082 (62 FR 38206, July 17, 1997), which is applicable to certain Bombardier Model CL–600–2B19 (Regional Jet Series 100 and 200) series airplanes, was published in the **Federal Register** on November 9, 1999 (64 FR 61039). The action proposed to continue to require repetitive inspections to detect cracks of a certain bulkhead web of the fuselage at certain locations, and repair, if necessary. The action also proposed to revise the repetitive inspection intervals for certain airplanes, and require modification or repair, as applicable.

Comments

Interested persons have been afforded an opportunity to participate in the making of this amendment. Due consideration has been given to the single comment received.

The commenter supports the proposed rule.

Change to Service Bulletin Citation

The FAA has revised paragraphs (a) and (b) and NOTE 4 of the final rule to correctly specify that Appendix 2 is included in Canadair Regional Jet Service Bulletin 601R–53–047. This appendix was incorrectly associated with Canadair Regional Jet Alert Service Bulletin A601R–53–045 in the proposed rule.

Conclusion

After careful review of the available data, including the comment noted above, the FAA has determined that air safety and the public interest require the adoption of the rule with the change described previously. The FAA has determined that this change will neither increase the economic burden on any operator nor increase the scope of the AD.

Cost Impact

There are approximately 77 airplanes of U.S. registry that will be affected by this AD.

The inspection that is currently required by AD 97–14–11 takes approximately 2 work hours per airplane to accomplish, at an average labor rate of $60 per work hour. Based on these figures, the cost impact of the currently required inspection on U.S. operators is estimated to be $9,960, or $120 per airplane, per inspection cycle.

The repair that is required by this AD will take approximately 300 work hours per airplane to accomplish, at an average labor rate of $60 per work hour. Required parts will cost approximately $1,828. Based on these figures, the cost impact of the repair on U.S. operators is estimated to be $19,828 per airplane.

The modification that is required by this AD will take approximately 212 work hours per airplane to accomplish, at an average labor rate of $60 per work hour. Required parts will cost approximately $935. Based on these figures, the cost impact of the modification on U.S. operators is estimated to be $13,655 per airplane.

The cost impact figures discussed above are based on assumptions that no operator has yet accomplished any of the requirements of this AD, and that no operator would accomplish those actions in the future if this AD were not adopted. However, the FAA has been advised that the manufacturer has committed previously to its customers that it will bear the labor costs associated with the repair and modification associated with accomplishing the actions required by this AD. Additionally, the manufacturer has indicated that warranty remedies may be available to defer the cost of the replacement parts also associated with accomplishing the actions required by this AD.

Regulatory Impact

The regulations adopted herein will not have a substantial direct effect on the States, on the relationship between the national Government and the States, or on the distribution of power and responsibilities among the various levels of government. Therefore, it is determined that this final rule does not have federalism implications under Executive Order 13132.

For the reasons discussed above, I certify that this action (1) is not a ''significant regulatory action'' under Executive Order 12866; (2) is not a ''significant rule'' under DOT Regulatory Policies and Procedures (44 FR 11034, February 26, 1979); and (3) will not have a significant economic impact, positive or negative, on a substantial number of small entities under the criteria of the Regulatory Flexibility Act. A final evaluation has been prepared for this action and it is contained in the Rules Docket. A copy of it may be obtained from the Rules Docket at the location provided under the caption **ADDRESSES**.

List of Subjects in 14 CFR Part 39

Air transportation, Aircraft, Aviation safety, Incorporation by reference, Safety.

Adoption of the Amendment

Accordingly, pursuant to the authority delegated to me by the Administrator, the Federal Aviation Administration amends part 39 of the Federal Aviation Regulations (14 CFR part 39) as follows:

PART 39—AIRWORTHINESS DIRECTIVES

1. The authority citation for part 39 continues to read as follows:

Authority: 49 U.S.C. 106(g), 40113, 44701.

§ 39.13 [Amended]

2. Section 39.13 is amended by removing amendment 39–10082 (62 FR 38206, July 17, 1997), and by adding a new airworthiness directive (AD), amendment 39–11510, to read as follows:

2000–01–12 Bombardier, Inc. (Formerly Canadair): Amendment 39–11510. Docket No.98–NM–192–AD. Supersedes AD 97–14–11, Amendment 39–10082.

Applicability: Model CL–600–2B19 (Regional Jet Series 100) series airplanes, serial numbers 7003 through 7185 inclusive; certificated in any category; except those airplanes on which Canadair Regional Jet Service Bulletin 601R–53–046, Revision 'B,' dated December 22, 1997, or Canadair Regional Jet Service Bulletin 601R–53–047, Revision 'D,' including Appendix 1 and Appendix 2, dated December 22, 1997, has been accomplished.

Note 1: This AD applies to each airplane identified in the preceding applicability provision, regardless of whether it has been modified, altered, or repaired in the area subject to the requirements of this AD. For airplanes that have been modified, altered, or repaired so that the performance of the requirements of this AD is affected, the owner/operator must request approval for an alternative method of compliance in accordance with paragraph (d)(1) of this AD. The request should include an assessment of the effect of the modification, alteration, or repair on the unsafe condition addressed by this AD; and, if the unsafe condition has not been eliminated, the request should include specific proposed actions to address it.

Compliance: Required as indicated, unless accomplished previously.

To detect and correct fatigue cracking in the underfloor pressure bulkhead of the fuselage, which could result in uncontrolled depressurization of the airplane and/or reduced structural integrity of the fuselage, accomplish the following:

Detailed Visual Inspections

(a) Perform a detailed visual inspection to detect cracks at FS409+128 of the bulkhead web drawing number 601R32208–123 of the fuselage, in accordance withCanadair Regional Jet Alert Service Bulletin A601R–53–045, Revision 'D,' includingAppendix 1, dated December 22, 1997, at the time specified in paragraph (a)(1) or (a)(2) of this AD, as applicable, until accomplishment of paragraph (b) or (c) of this AD, as applicable.

(1) For airplanes that have accomplished a detailed visual inspection in accordance with AD 97–14–11 prior to the effective date of this AD: Perform a subsequent detailed visual inspection prior to the accumulation of 1,000 total flight hours, or within 100 flight hours after the immediately preceding inspection accomplished in accordance with AD 97–14–11, whichever occurs later. Thereafter, repeat the inspection at intervals not to exceed 100 flight hours.

(2) For airplanes that have not accomplished a detailed visual inspection in accordance with AD 97–14–11 prior to the effective date of this AD: Perform a detailed visual inspection within 20 flight hours after the effective date of this AD. Perform a subsequent detailed visual inspection prior to the accumulation of 1,000 total flight hours, or within 100 flight hours after accomplishment of the immediately preceding inspection, whichever occurs later. Thereafter, repeat the inspection at intervals not to exceed 100 flight hours.

Note 2: For the purposes of this AD, a detailed visual inspection is defined as: ''An intensive visual examination of a specific structural area, system, installation, or assembly to detect damage, failure, or irregularity. Available lighting is normally supplemented with a direct source of good lighting at intensity deemed appropriate by the inspector. Inspection aids such as mirror, magnifying lenses, etc. may be used. Surface cleaning and elaborate access procedures may be required.''

Note 3: Accomplishment of the inspection required by paragraph (a) of thisAD, prior to the effective date of this AD in accordance with Canadair Regional Jet AlertService Bulletin A601R–53–045, dated June 25, 1997; Revision 'A,' includingAppendix 1, dated June 26, 1997; Revision 'B,' including Appendix 1, dated June 27,1997; or Revision 'C,' including Appendix 1, dated July 2, 1997; is considered acceptable for compliance with the applicable action specified by this AD.

Modification

(b) For any airplane on which no cracking has been detected during any inspection required by paragraph (a) of this AD: Within 9 months after the effective date of this AD, modify FS409+128 of the bulkhead web drawing number 601R32208–123 of the fuselage in accordance with Canadair Regional Jet Service Bulletin 601R–53–047, Revision 'D,' including Appendix 1 and Appendix 2, dated December 22, 1997. Accomplishment of this modification terminates the requirements of this AD.

Note 4: Any modification accomplished prior to the effective date of this AD in accordance with Canadair Regional Jet Service Bulletin 601R–53–047, including Appendix 1 and Appendix 2, dated July 18, 1997; Revision 'A,' including Appendix 1 and Appendix 2, dated July 31, 1997; Revision 'B,' including Appendix 1 and Appendix 2, dated August 22, 1997; or Revision 'C,' including Appendix 1 and Appendix 2, dated October 7, 1997; is considered acceptable for compliance with the applicable actions required by this AD.

Repair

(c) For any airplane on which any cracking is detected during any inspection required by paragraph (a) of this AD: Prior to further flight, determine the extent of the cracking as specified in Part A of paragraph 2.B. of the Accomplishment Instructions of Canadair Regional Jet Alert Service Bulletin A601R–53–045, Revision 'D,' including Appendix 1, dated December 22, 1997, and accomplish the requirements of paragraph (c)(1) or (c)(2), as applicable.

(1) If the cracking is within the limits specified by Part A of paragraph 2.B. of the Accomplishment Instructions of the alert service bulletin, accomplish the requirements of paragraphs (c)(1)(i) and (c)(1)(ii) of this AD at the time specified in those paragraphs.

(i) Repeat the detailed visual inspection required by paragraph (a) of this AD thereafter at intervals not to exceed 100 flight hours; and

(ii) Within 6 months after the effective date of this AD, or within 3 months after the initial date the crack was detected, whichever occurs later: Repair the affected area in accordance with Canadair Regional Jet Service Bulletin 601R–53–046, Revision 'B,' dated December 22, 1997. Accomplishment of this repair terminates the requirements of this AD.

Note 5: Any repair accomplished prior to the effective date of this AD in accordance with Canadair Regional Jet Service Bulletin 601R–53–046, dated June 27, 1997, or Revision 'A,' dated July 2, 1997, is considered acceptable for compliance with the applicable actions specified by this AD.

(2) If the cracking is outside the limits specified by Part A of the Accomplishment Instructions of the alert service bulletin, prior to further flight, perform a high frequency eddy current (HFEC) inspection to detect cracks of the forward side of the web of fuselage FS409+128 bulkhead web drawing number 601R32208–123, along the upper edge of the horizontal angle part number 601R32208–73, in accordance with Part B of paragraph 2.B. of the Accomplishment Instructions of the alert service bulletin.

(i) If, during any HFEC inspection required by paragraph (c)(2) of this AD, any cracking is detected that is within the limits specified by Part B of paragraph 2.B. of the Accomplishment Instructions of the alert service bulletin, accomplish the requirements of paragraphs (c)(2)(i)(A) and (c)(2)(i)(B) of this AD at the times specified in those paragraphs.

(A) Repeat the HFEC inspection required by paragraph (c)(2) of this AD thereafter at intervals not to exceed 50 flight hours, and repeat the detailed visual inspection required by paragraph (a) of this AD thereafter at interval not to exceed 100 flight hours; and

(B) Within 6 months after the effective date of this AD, or within 3 months after the initial date the crack was detected, whichever occurs later: Repair the affected area in accordance with Canadair Regional Jet Service Bulletin 601R–53–046, Revision 'B,' dated December 22, 1997. Accomplishment of this repair terminates the requirements of this AD.

(ii) If, during any HFEC inspection required by paragraph (c)(2) of this AD, any cracking is detected that is outside the limits specified by Part B of paragraph 2.B. of the Accomplishment Instructions of the alert service bulletin, prior to further flight, determine the extent of the cracking as specified in paragraph 1.D. (''Compliance'') of Canadair Regional Jet Service Bulletin 601R–53–046, Revision 'B,' dated December 22, 1997, and accomplish the requirements of paragraph (c)(2)(ii)(A) or (c)(2)(ii)(B) of this AD, as applicable.

(A) If the cracking is within the limits specified by paragraph 1.D. (''Compliance'') of the service bulletin, prior to further flight, repair in accordance with the service bulletin. Accomplishment of this repair terminates the requirements of this AD.

(B) If the cracking is outside the limits specified by paragraph 1.D. (''Compliance'') of the service bulletin, prior to further flight, repair in accordance with a method approved by the Manager, New York Aircraft Certification Office (ACO).

Alternative Methods of Compliance

(d)(1) An alternative method of compliance or adjustment of the compliance time that provides an acceptable level of safety may be used if approved by the Manager, New York ACO. Operators shall submit their requests through an appropriate FAA Principal Maintenance Inspector, who may add comments and then send it to the Manager, New York ACO.

(2) Alternative methods of compliance, approved previously in accordance with AD 97–14–11, amendment 39–10082, are approved as alternative methods of compliance for this AD.

Note 6: Information concerning the existence of approved alternative methods of compliance with this AD, if any, may be obtained from the New York ACO.

Special Flight Permits

(e) Special flight permits may be issued in accordance with sections §§ 21.197 and 21.199 of the Federal Aviation Regulations (14 CFR 21.197 and 21.199) to operate the airplane to a location where the requirements of this AD can be accomplished.

Incorporation by Reference

(f) Except as provided by paragraph (c)(2)(ii)(B) of this AD, the actions shall be done in accordance with Canadair Regional Jet Alert Service Bulletin A601R–53–045, Revision 'D,' including Appendix 1, dated December 22, 1997; Canadair Regional Jet Service Bulletin 601R–53–047, Revision 'D,' including Appendix 1 and Appendix 2, dated December 22, 1997; and Canadair Regional Jet Service Bulletin 601R–53–046, Revision 'B,' dated December 22, 1997; as applicable. This incorporation by reference was approved by the Director of the Federal Register in accordance with 5 U.S.C. 552(a) and 1 CFR part 51. Copies may be obtained from Bombardier, Inc., Canadair, Aerospace Group, P.O. Box 6087, Station Centre-ville, Montreal, Quebec H3C 3G9, Canada. Copies may be inspected at the FAA, Transport Airplane Directorate, 1601 Lind Avenue, SW., Renton, Washington; or at the FAA, Engine and Propeller Directorate, New York Aircraft Certification Office, 10 Fifth Street,

Third Floor, Valley Stream, New York; or at the Office of the Federal Register, 800 North Capitol Street, NW., suite 700, Washington, DC.

Note 7: The subject of this AD is addressed in Canadian airworthiness directive CF–97–11R2, dated December 22, 1997.

(g) This amendment becomes effective on February 17, 2000.

Issued in Renton, Washington, on January 6, 2000.

Donald L. Riggin,

Acting Manager, Transport Airplane Directorate, Aircraft Certification Service.

[FR Doc. 00–720 Filed 1–12–00; 8:45 am]

BILLING CODE 4910–13–P

DEPARTMENT OF TRANSPORTATION

Federal Aviation Administration

14 CFR Parts 61, 67, 141, and 142

[Docket No. FAA–1998–4518–1; Amendment Nos. 61–105, 67–18, 141–11, & 142–3]

RIN 2120–AG66

Licensing and Training of Pilots, Flight Instructors, and Ground Instructors Outside the United States

AGENCY: Federal Aviation Administration (FAA), DOT.

ACTION: Disposition of comments on final rule.

SUMMARY: This document is a summary and disposition of comments received on a final rule published by the Federal Aviation Administration (FAA) on October 5, 1998. That final rule removed language from Title 14 of the Code of Federal Regulations that restricted the licensing of foreign persons outside of the United States and that restricted the operation of pilot schools and training centers that are located outside of the United States.

ADDRESSES: The complete docket for the final rule titled ''Licensing and Training of Pilots, Flight Instructors, and Ground Instructors Outside the United States'' may be examined at the U.S. Department of Transportation Dockets, Docket No. FAA–98–4518, 400 Seventh Street, SW, Washington, DC 20591, in Room Plaza 401 between 10:00 a.m. and 5:00 p.m. weekdays except Federal holidays.

FOR FURTHER INFORMATION CONTACT: Warren Robbins, Certification Branch (AFS–840), General Aviation and Commercial Division, Flight Standards Service, Federal Aviation Administration, 800 Independence Avenue, SW., Washington, DC 20591; telephone (202) 267–8196.

SUPPLEMENTARY INFORMATION:

Background

On October 5, 1998, the FAA published a final rule titled ''Licensing and Training of Pilots, Flight Instructors, and Ground Instructors Outside the United States'' (63 FR 53531). That final rule removed language from the FAA regulations that restricted the licensing of foreign pilots, flight instructors, and ground instructors outside of the United States. In addition, that final rule removed language from the FAA regulations that restricted the operation of pilot schools and training centers located outside of the United States. The FAA concluded that the restrictive language should be removed after it determined that the administrative concerns for the restrictive language were no longer applicable and after the restrictive language was identified during harmonization efforts between the FAA and the European Joint Aviation Authorities (JAA) as an obstruction to harmonization. The FAA determined that a failure to remove the restrictive language on licensing and training could be detrimental to FAA pilot schools and training centers seeking to train students from JAA member States. Further, the FAA removed the restrictive language as part of a commitment to reducing restrictions that are not safety driven.

This document addresses comments received on the above final rule.

Discussion of Comments

The FAA received three comments on the final rule title ''Licensing and Training of Pilots, Flight Instructors, and Ground Instructors Outside the United States'' (the final rule). The three comments were from the Air Line Pilots Association (ALPA), Battle Creek Unlimited, Inc. (BCU), and the International Brotherhood of Teamsters Airline Division (IBT). ALPA and BCU support the final rule citing harmonization with the JAA and free trade. IBT opposes the final rule for the four reasons discussed below.

IBT Comment—First, IBT objects to the process by which the final rule was adopted, stating that there seems to be insufficient reason and a lack of urgency to issue the final rule without prior notice.

FAA Response—At the time of this rulemaking the FAA was facing the imminent implementation of new JAA regulations for European countries regarding flight crew licensing. The new JAA regulations included language that would restrict pilot training in the United States and would not permit the conversion of FAA pilot certificates to JAA pilot licenses absent an arrangement (e.g. Bilateral Aviation Safety Agreement (BASA)). As a result, U.S. pilot schools and training centers that seek to continue to train foreign students from the JAA member states, both inside and outside of the U.S., could face economic losses. The JAA indicated that it might remove the restrictive language in the JAA regulations if the FAA removed the restrictive language in the FAA regulations. Accordingly, the FAA had to act expeditiously in order to implement a rule that would encourage a more favorable treatment of FAA pilot certificates and the training received at FAA pilot schools and training centers. After a review of the restrictive language in the FAA regulations, its original intent and purpose, the FAA determined that the restrictive language was no longer needed and its removal would have no unfavorable impact on U.S. pilots, pilot schools, or training organizations. Therefore, the FAA adopted the final rule without prior notice as it was determined to be unnecessary and impracticable.

On February 26, 1999, in response to the final rule, the JAA issued a Notice of Proposed Amendment (NPA) No. 10 that proposed, among other things, to remove some of the restrictions on pilot training outside of JAA member states. While the FAA cannot say whether NPA No. 10 will be adopted, this is a positive sign and the FAA stands ready to work with the JAA.

IBT Comment—Second, IBT raises concerns that the final rule ''appears not to ensure that in application the FAA would restrict the licensing of foreign pilots to the organizations and countries discussed.'' IBT is concerned that the FAA will lose its ability to monitor and control the quality of training.

FAA Response—The final rule removes restrictive language concerning the licensing of foreign persons outside of the United States and the operation of U.S. pilot schools and training centers located outside of the United States. IBT is correct that the removal of the above restrictive language does not apply only to the licensing of pilots and the operation of U.S. pilot schools and training centers in JAA member states. The FAA may choose to allow the certification of pilots or the operation of U.S. training organizations anywhere. Regardless of the location, the certification of U.S. pilots, or training organizations providing training to pilots outside of the United States, requires approval from the FAA and oversight by the FAA to ensure quality control of licensing and training.

IBT Comment—Third, IBT states that United States citizens potentially are disadvantaged through the loss of employment resulting from the operation of U.S. registered aircraft by foreign nationals because the rule appears to enhance the ability of operators to hire, train, and employ foreign flight deck crewmembers.

FAA Response—The final rule does not address interchange of crewmembers or code sharing arrangements. As a result, the comment is outside of the purview of the rule.

IBT Comment—Finally, IBT asserts that the FAA acted out of economic and administrative considerations as opposed to correcting perceived operational and safety problems.

FAA Response—The FAA agrees that the implementation of the final rule removes an economic and administrative burden from non-U.S. citizen certificate applicants and from pilot training organizations outside of the United States. The FAA disagrees, however, that any operational or safety problems were overlooked with the adoption of the final rule. The restrictive language in the FAA regulations was placed there because of administrative concerns of the FAA that are no longer applicable. The restrictive language was not placed in the FAA regulations to address safety concerns. It is the FAA's commitment to reduce restrictions in our regulations that are not safety driven and to further harmonize our regulations with our European neighbors. As a result, the FAA adopted the final rule.

Conclusion

After consideration of the comments submitted in response to the final rule, the FAA has determined that no further rulemaking action is necessary. Amendment Numbers 61–105, 67–18, 141–11, and 142–3 remain in effect as adopted.

Issued in Washington, DC, January 10, 2000.

L. Nicholas Lacey,

Director, Flight Standards Service.

[FR Doc. 00–863 Filed 1–12–00; 8:45 am]

BILLING CODE 4910–13–M

DEPARTMENT OF TRANSPORTATION

Federal Aviation Administration

14 CFR Part 97

[Docket No. 29896; Amdt. No. 1969]

Standard Instrument Approach Procedures; Miscellaneous Amendments

AGENCY: Federal Aviation Administration (FAA), DOT.

ACTION: Final rule.

SUMMARY: This amendment establishes, amends, suspends, or revokes Standard Instrument Approach Procedures (SIAPs) for operations at certain airports. These regulatory actions are needed because of changes occurring in the National Airspace System, such as the commissioning of new navigational facilities, addition of new obstacles, or changes in air traffic requirements. These changes are designed to provide safe and efficient use of the navigable airspace and to promote safe flight operations under instrument flight rules at the affected airports.

DATES: An effective date for each SIAP is specified in the amendatory provisions.

Incorporation by reference-approved by the Director of the Federal Register on December 31, 1980, and reapproved as of January 1, 1982.

ADDRESSES: Availability of matter incorporated by reference in the amendment is as follows:

For Examination—

1. FAA Rules Docket, FAA Headquarters Building, 800 Independence Avenue, SW., Washington, DC 20591;
2. The FAA Regional Office of the region in which affected airport is located; or
3. The Flight Inspection Area Office which originated the SIAP.

For Purchase—Individual SIAP copies may be obtained from:

1. FAA Public Inquiry Center (APA–200), FAA Headquarters Building, 800 Independence Avenue, SW., Washington, DC 20591; or
2. The FAA Regional Office of the region in which the affected airport is located.

By Subscription—Copies of all SIAPs, mailed once every 2 weeks, are for sale by the Superintendent of Documents, U.S. Government Printing Office, Washington, DC 20402.

FOR FURTHER INFORMATION CONTACT: Donald P. Pate, Flight Procedure Standards Branch (AMCAFS–420), Flight Technologies and Programs Division, Flight Standards Service, Federal Aviation Administration, Mike Monroney Aeronautical Center, 6500 South MacArthur Blvd., Oklahoma City, OK 73169 (Mail Address: P.O. Box 25082 Oklahoma City, OK 73125) telephone: (405) 954–4164.

SUPPLEMENTARY INFORMATION: This amendment to part 97 of the Federal Aviation Regulations (14 CFR part 97) establishes, amends, suspends, or revokes Standard Instrument Approach Procedures (SIAPs). The complete regulatory description on each SIAP is contained in the appropriate FAA Form 8260 and the National Flight Data Center (FDC)/Permanent (P) Notices to Airmen (NOTAM) which are incorporated by reference in the amendment under 5 U.S.C. 552(a), 1 CFR part 51, and § 97.20 of the Federal Aviation's Regulations (FAR). Materials incorporated by reference are available for examination or purchase as stated above.

The large number of SIAPs, their complex nature, and the need for a special format make their verbatim publication in the **Federal Register** expensive and impractical. Further, airmen do not use the regulatory text of the SIAPs, but refer to their graphic depiction of charts printed by publishers of aeronautical materials. Thus, the advantages of incorporation by reference are realized and publication of the complete description of each SIAP contained in FAA form documents is unnecessary. The provisions of this amendment state the affected CFR (and FAR) sections, with the types and effective dates of the SIAPs. This amendment also identifies the airport, its location, the procedure identification and the amendment number.

The Rule

This amendment to part 97 of the Federal Aviation Regulations (14 CFR part 97) establishes, amends, suspends, or revokes SIAPs. For safety and timeliness of change considerations, this amendment incorporates only specific changes contained in the content of the following FDC/P NOTAMs for each SIAP. The SIAP information in some previously designated FDC/Temporary (FDC/T) NOTAMs is of such duration as to be permanent. With conversion to FDC/P NOTAMs, the respective FDC/T NOTAMs have been canceled.

The FDC/P NOTAMs for the SIAPs contained in this amendment are based on the criteria contained in the U.S. Standard for Terminal Instrument Procedures (TERPS). In developing these chart changes to SIAPs by FDC/P NOTAMs, the TERPS criteria were

applied to only these specific conditions existing at the affected airports. All SIAP amendments in this rule have been previously issued by the FAA in a National Flight Data Center (FDC) Notice to Airmen (NOTAM) as an emergency action of immediate flight safety relating directly to published aeronautical charts. The circumstances which created the need for all these SIAP amendments requires making them effective in less than 30 days.

Further, the SIAPs contained in this amendment are based on the criteria contained in the TERPS. Because of the close and immediate relationship between these SIAPs and safety in air commerce, I find that notice and public procedure before adopting these SIAPs are impracticable and contrary to the public interest and, where applicable, that good cause exists for making these SIAPs effective in less than 30 days.

Conclusion

The FAA has determined that this regulation only involves an established body of technical regulations for which frequent and routine amendments are necessary to keep them operationally current. It, therefore—(1) is not a ''significant regulatory action'' under Executive Order 12866; (2) is not a ''significant rule'' under DOT Regulatory Policies and Procedures (44 FR 11034; February 26, 1979); and (3) does not warrant preparation of a regulatory evaluation as the anticipated impact is so minimal. For the same reason, the FAA certifies that this amendment will not have a significant economic impact on a substantial number of small entities under the criteria of the Regulatory Flexibility Act.

List of Subjects in 14 CFR Part 97

Air traffic control, Airports, Navigation (air).

Issued in Washington, DC on January 7, 2000.

L. Nicholas Lacey,

Director, Flight Standards Service.

Adoption of the Amendment

Accordingly, pursuant to the authority delegated to me, part 97 of the Federal Aviation Regulations (14 CFR part 97) is amended by establishing, amending, suspending, or revoking Standard Instrument Approach Procedures, effective at 0901 UTC on the dates specified, as follows:

PART 97—STANDARD INSTRUMENT APPROACH PROCEDURES

1. The authority citation for part 97 is revised to read as follows:

Authority: 49 U.S.C. 40103, 40113, 40120, 44701; 49 U.S.C. 106(g); and 14 CFR 11.49(b)(2).

2. Part 97 is amended to read as follows:

§§ 97.23, 97.25, 97.27, 97.29, 97.31, 97.33, 97.35 [Amended]

By amending: § 97.23 VOR, VOR/DME, VOR or TACAN, and VOR/DME or TACAN; § 97.25 LOC, LOC/DME, LDA, LDA/DME, SDF, SDF/DME; § 97.27 NDB, NDB/DME; § 97.29 ILS, ILS/DME, ISMLS, MLS, MLS/DME, MLS/RNAV; § 97.31 RADAR SIAPs; § 97.33 RNAV SIAPs; and § 97.35 COPTER SIAPs, identified as follows:

Effective Upon Publication

FDC date	State	City	Airport	FDC No.	SIAP
01/03/00	MI	Pontiac	***Temporary*** Oakland County Intl	0/0069	LOC BC Rwy 27L, Orig...
01/04/00	IA	Jefferson City	Jefferson City Muni	0/0095	GPS Rwy 32, Orig...
01/04/00	IA	Jefferson City	Jefferson City Muni	0/0096	GPS Rwy 14, Orig...
01/04/00	LA	Lake Charles	Lake Charles Regional	0/0104	ILS Rwy 15, Amdt 19...
01/04/00	LA	Lake Charles	Lake Charles Regional	0/0105	NDB or GPS Rwy 15, Amdt 18...
01/04/00	MI	Lansing	Capital City	0/0106	VOR or GPS Rwy 6 Amdt 24...
01/04/00	TX	Alpine	Alpine-Casparis Muni	0/0108	NDB Rwy 19, Amdt 5...
01/04/00	TX	Alpine	Alpine-Casparis Muni	0/0109	GPS Rwy 19, Orig...
12/20/99	CA	Eureka	Murray Field	9/0193	GPS Rwy 11 Orig...
12/20/99	CA	Eureka	Murray Field	9/0193	GPS Rwy 11 Orig...
12/20/99	CA	Eureka	Murray Field	9/0199	VOR/DME RNAV Rwy 11 Amdt 6...
12/20/99	CA	Eureka	Murray Field	9/0199	VOR/DME RNAV Rwy 11 Amdt 6...
12/22/99	ME	Bangor	Bangor Intl	9/0014	NDB Rwy 33 Amdt 5...
12/22/99	ND	Grand Forks	Grand Forks Intl	9/9985	VOR or GPS Rwy 35L Amdt 6A...
12/24/99	PA	Pittsburgh	Allegheny County	9/0028	ILS Rwy 10 Amdt 3B...
12/27/99	PA	Washington	Washington County	9/0062	LOC Rwy 27 Amdt 1A...
12/27/99	PA	Washington	Washington County	9/0063	NDB or GPS Rwy 27 Orig-B...
12/27/99	PA	Washington	Washington County	9/0064	GPS Rwy 9 Orig-A...
12/30/99	TX	Dallas-Fort Worth	Dallas-Fort Worth Intl	9/0126	ILS Rwy 36R, Amdt 3...
12/30/99	TX	Dallas-Fort Worth	Dallas-Fort Worth Intl	9/0127	ILS Rwy 36L, Amdt 6...
12/30/99	TX	Dallas-Fort Worth	Dallas-Fort Worth Intl	9/0128	ILS Rwy 35R, Amdt 1...
12/30/99	TX	Dallas-Fort Worth	Dallas-Fort Worth Intl	9/0130	ILS Rwy 35L, Amdt 2...
12/30/99	TX	Dallas-Fort Worth	Dallas-Fort Worth Intl	9/0131	ILS Rwy 35C, Amdt 6B...
12/30/99	TX	Dallas-Fort Worth	Dallas-Fort Worth Intl	9/0132	ILS Rwy 18R, Amdt 5A...
12/30/99	TX	Dallas-Fort Worth	Dallas-Fort Worth Intl	9/0133	ILS Rwy 18L, Amdt 17...
12/30/99	TX	Dallas-Fort Worth	Dallas-Fort Worth Intl	9/0134	ILS Rwy 17L, Amdt 1...
12/30/99	TX	Dallas-Fort Worth	Dallas-Fort Worth Intl	9/0135	ILS Rwy 17C, Amdt 7...
12/30/99	TX	Dallas-Fort Worth	Dallas-Fort Worth Intl	9/0136	ILS Rwy 13R, Amdt 5A...
12/30/99	TX	Dallas-Fort Worth	Dallas-Fort Worth Intl	9/0137	Converging ILS Rwy 36R, Amdt 1B...
12/30/99	TX	Dallas-Fort Worth	Dallas-Fort Worth Intl	9/0138	Converging ILS Rwy 36L, Amdt 3B...
12/30/99	TX	Dallas-Fort Worth	Dallas-Fort Worth Intl	9/0139	Converging ILS Rwy 35L, Amdt 1A...
12/30/99	TX	Dallas-Fort Worth	Dallas-Fort Worth Intl	9/0140	Converging ILS Rwy 35C, Amdt 4A...
12/30/99	TX	Dallas-Fort Worth	Dallas-Fort Worth Intl	9/0141	Converging ILS Rwy 18R, Amdt 3B...
12/30/99	TX	Dallas-Fort Worth	Dallas-Fort Worth Intl	9/0142	Converging ILS Rwy 18L, Amdt 3A...
12/30/99	TX	Dallas-Fort Worth	Dallas-Fort Worth Intl	9/0143	Converging ILS Rwy 17C, Amdt 4A...
12/30/99	TX	Dallas-Fort Worth	Dallas-Fort Worth Intl	9/0144	Converging ILS Rwy 13R, Amdt 4B...

[FR Doc. 00–869 Filed 1–12–00; 8:45 am]

BILLING CODE 4910–13–M

DEPARTMENT OF TRANSPORTATION

Federal Aviation Administration

14 CFR Part 97

[Docket No. 29895; Amdt. No. 1968]

Standard Instrument Approach Procedures; Miscellaneous Amendments

AGENCY: Federal Aviation Administration (FAA), DOT.

ACTION: Final rule.

SUMMARY: This amendment establishes, amends, suspends, or revokes Standard Instrument Approach Procedures (SIAPs) for operations at certain airports. These regulatory actions are needed because of the adoption of new or revised criteria, or because of changes occurring in the National Airspace System, such as the commissioning of new navigational facilities, addition of new obstacles, or changes in air traffic requirements. These changes are designed to provide safe and efficient use of the navigable airspace and to promote safe flight operations under instrument flight rules at the affected airports.

DATES: An effective date for each SIAP is specified in the amendatory provisions.

Incorporation by reference-approved by the Director of the Federal Register on December 31, 1980, and reapproved as of January 1, 1982.

ADDRESSES: Availability of matters incorporated by reference in the amendment is as follows:

For Examination—

1. FAA Rules Docket, FAA Headquarters Building, 800 Independence Avenue, SW., Washington, DC 20591;

2. The FAA Regional Office of the region in which the affected airport is located; or

3. The Flight Inspection Area Office which originated the SIAP.

For Purchase—Individual SIAP copies may be obtained from:

1. FAA Public Inquiry Center (APA–200), FAA Headquarters Building, 800 Independence Avenue, SW., Washington, DC 20591; or

2. The FAA Regional Office of the region in which the affected airport is located.

By Subscription—Copies of all SIAPs, mailed once every 2 weeks, are for sale by the Superintendent of Documents, U.S. Government Printing Office, Washington, DC 20402.

FOR FURTHER INFORMATION CONTACT: Donald P. Pate, Flight Procedure Standards Branch (AMCAFS–420), Flight Technologies and Programs Division, Flight Standards Service, Federal Aviation Administration, Mike Monroney Aeronautical Center, 6500 South MacArthur Blvd. Oklahoma City, OK. 73169 (Mail Address: P.O. Box 25082 Oklahoma City, OK. 73125) telephone: (405) 954–4164.

SUPPLEMENTARY INFORMATION: This amendment to part 97 of the Federal Aviations Regulations (14 CFR part 97) establishes, amends, suspends, or revokes Standard Instrument Approach Procedures (SIAPs). The complete regulatory description of each SIAP is contained in official FAA form documents which are incorporated by reference in this amendment under 5 U.S.C. 552(a), 1 CFR part 51, and § 97.20 of the Federal Aviation Regulations (FAR). The applicable FAA Forms are identified as FAA Forms 8260–3, 8260–4, and 8260–5. Materials incorporated by reference are available for examination or purchase as stated above.

The large number of SIAPs, their complex nature, and the need for a special format make their verbatim publication in the **Federal Register** expensive and impractical. Further, airmen do not use the regulatory text of the SIAPs, but refer to their graphic depiction on charts printed by publishers of aeronautical materials. Thus, the advantages of incorporation by reference are realized and publication of the complete description of each SIAP contained in FAA form documents is unnecessary. The provisions of this amendment state the affected CFR (and FAR) sections, with the types and effective dates of the SIAPs. This amendment also identifies the airport, its location, the procedure identification and the amendment number.

The Rule

This amendment to part 97 is effective upon publication of each separate SIAP as contained in the transmittal. Some SIAP amendments may have been previously issued by the FAA in a National Flight Data Center (NFDC) Notice to Airmen (NOTAM) as an emergency action of immediate flight safety relating directly to published aeronautical charts. The circumstances which created the need for some SIAP amendments may require making them effective in less than 30 days. For the remaining SIAPs, an effective date at least 30 days after publication is provided.

Further, the SIAPs contained in this amendment are based on the criteria contained in the U.S. Standard for Terminal Instrument Procedures (TERPS). In developing these SIAPs, the TERPS criteria was applied to the conditions existing or anticipated at the affected airports. Because of the close and immediate relationship between these SIAPs and safety in air commerce, I find that notice and public procedure before adopting these SIAPs are impracticable and contrary to the public interest and, where applicable, that good cause exists for making some SIAPs effective in less than 30 days.

Conclusion

The FAA has determined that this regulation only involves an established body of technical regulations for which frequent and routine amendments are necessary to keep them operationally current. It, therefore—(1) Is not a ''significant regulatory action'' under Executive Order 12866; (2) Is not a ''significant rule'' under DOT Regulatory Policies and Procedures (44 FR 11034; February 26, 1979); and (3) Does not warrant preparation of a regulatory evaluation as the anticipated impact is so minimal. For the same reason, the FAA certifies that this amendment will not have a significant economic impact on a substantial number of small entities under the criteria of the Regulatory Flexibility Act.

List of Subjects in 14 CFR Part 97

Air traffic control, Airports, Navigation (air).

Issued in Washington, DC on January 7, 2000.

L. Nicholas Lacey,

Director, Flight Standards Service.

Adoption of the Amendment

Accordingly, pursuant to the authority delegated to me, part 97 of the Federal Aviation Regulations (14 CFR part 97) is amended by establishing, amending, suspending, or revoking Standard Instrument Approach Procedures, effective at 0901 UTC on the dates specified, as follows:

PART 97—STANDARD INSTRUMENT APPROACH PROCEDURES

1. The authority citation for part 97 is revised to read as follows:

Authority: 49 U.S.C. 106(g), 40103, 40113, 40120, 44701; and 14 CFR 11.49(b)(2.

2. Part 97 is amended to read as follows:

§§ 97.23, 97.25, 97.27, 97.29, 97.31, 97.33, 97.35

By amending: § 97.23 VOR, VOR/DME, VOR or TACAN, and VOR/DME or TACAN; § 97.25 LOC, LOC/DME, LDA, LDA/DME, SDF, SDF/DME; § 97.27 NDB, NDB/DME; § 97.29 ILS ILS/DME, ISMLS, MLS, MLS/DME, MLS/RNAV; § 97.31 RADAR SIAPs; § 97.33 RNAV SIAPs; and § 97.35 COPTER SIAPs, identified as follows:

. . . Effective January 27, 2000

Clovis, NM, Clovis Muni, VOR RWY 22, Amdt 4
Clovis, NM, Clovis Muni, LOC RWY 4, Amdt 2, CANCELLED
Clovis, NM, Clovis Muni, NDB RWY 4, Amdt 4
Clovis, NM, Clovis Muni, ILS RWY 4, Orig
Clovis, NM, Clovis Muni, GPS RWY 4, Orig
Clovis, NM, Clovis Muni, GPS RWY 22, Orig
Clovis, NM, Clovis Muni, GPS RWY 30, Amdt 1

. . . Effective February 24, 2000

Fairbanks, AK, Fairbanks Intl, VOR OR TACAN RWY 19R, Amdt 1
Kalskag, AK, Kalskag, GPS RWY 6, Orig
Kalskag, AK, Kalskag, GPS RWY 24, Orig
San Martin, CA, South Co Airport of Santa Clara Co, GPS RWY 32, Orig
Georgetown, DE, Sussex County, VOR RWY 4, Amdt 5
Georgetown, DE, Sussex County, VOR RWY 22, Amdt 6
Georgetown, DE, Sussex County, VOR/DME RNAV OR GPS RWY 22, Amdt 3A, CANCELLED
Georgetown, DE, Sussex County, RNAV RWY 4, Orig
Georgetown, DE, Sussex County, RNAV RWY 22, Orig
Georgetown, DE, Sussex County, GPS RWY 4, Orig-A, CANCELLED
Boca Raton, FL, Boca Raton, GPS RWY 5, Amdt 1
Grangeville, ID, Idaho County, GPS RWY 7, Orig
Grangeville, ID, Idaho County, GPS RWY 25, Orig
Belleville, IL, Scott AFB/Midamerica, ILS RWY 32L, Orig
Baltimore, MD, Baltimore-Washington Intl, VOR/DME–A, Amdt 1
Baltimore, MD, Baltimore-Washington Intl, VOR/DME RWY 4, Amdt 2
Baltimore, MD, Baltimore-Washington Intl, VOR OR GPS RWY 10, Amdt 16
Baltimore, MD, Baltimore-Washington Intl, VOR/DME RWY 15L, Amdt 1
Baltimore, MD, Baltimore-Washington Intl, VOR/DME RWY 22, Amdt 10
Baltimore, MD, Baltimore-Washington Intl, VOR OR GPS RWY 28, Amdt 23
Baltimore, MD, Baltimore-Washington Intl, VOR/DME RWY 33L, Amdt 2
Ocean City, MD, Ocean City Muni, VOR–A, Amdt 2
Ocean City, MD, Ocean City Muni, LOC RWY 14, Amdt 2
Ocean City, MD, Ocean City Muni, RNAV RWY 14, Orig
Salisbury, MD, Salisbury-Ocean City Wicomico Regional, ILS RWY 32, Amdt 6
Salisbury, MD, Salisbury-Ocean City Wicomico Regional, VOR RWY 5, Amdt 9
Salisbury, MD, Salisbury-Ocean City Wicomico Regional, VOR RWY 23, Amdt 9
Salisbury, MD, Salisbury-Ocean City Wicomico Regional, VOR RWY 32, Amdt 9
Dodge Center, MN, Dodge Center, VOR OR GPS–A, Amdt 3
New York, NY LaGuardia, LOC RWY 31, Amdt 2
Ahoskie, NC, Tri-County, VOR/DME OR GPS–A, Amdt 5
Ahoskie, NC, Tri-County, NDB RWY 1, Amdt 2
Ahoskie, NC, Tri-County, GPS RWY 1, Orig
Ahoskie, NC, Tri-County, GPS RWY 19, Orig
Greenville, NC, Pitt-Greenville, GPS RWY 2, Amdt 1
Greenville, NC, Pitt-Greenville, GPS RWY 20, Amdt 1
Lexington, NC, VOR/DME RWY 24, Orig
Lewisburg, TN, Ellington, GPS RWY 20, Orig

[FR Doc. 00–865 Filed 1–12–00; 8:45 am]

BILLING CODE 4910–13–M

DEPARTMENT OF THE TREASURY

Internal Revenue Service

26 CFR Part 1

[TD 8860]

RIN 1545–AP78

Treatment of Income and Expense From Certain Hyperinflationary, Nonfunctional Currency Transactions and Certain Notional Principal Contracts

AGENCY: Internal Revenue Service (IRS), Treasury.

ACTION: Final regulations.

SUMMARY: This document contains final regulations regarding the treatment of income and deductions arising from certain foreign currency transactions denominated in hyperinflationary currencies and coordinates section 988 with the section 446 regulations pertaining to significant nonperiodic payments. These regulations are intended to prevent distortions in computing income and deductions of taxpayers who enter into certain transactions in hyperinflationary currencies, and nonfunctional currency, notional principal contracts with significant nonperiodic payments.

DATES: These regulations are effective February 14, 2000.

FOR FURTHER INFORMATION CONTACT: Roger M. Brown at (202) 622–3830 (not a toll-free number) of the Office of the Associate Chief Counsel (International) within the Office of the Chief Counsel, Room 4554, 1111 Constitution Avenue, NW., Washington, DC. 20224.

SUPPLEMENTARY INFORMATION:

Background

On March 17, 1992, proposed regulations were published in the **Federal Register** at 57 FR 9217 (INTL–15–91). The IRS received two written comments on the proposed regulations, which are discussed below. No public hearing was held and no requests to speak were received. Having considered the comments, the IRS and Treasury Department adopt the proposed regulations, as modified by this Treasury decision.

Explanation of Provisions

I. Hyperinflationary Instruments

A. Proposed Regulations

The proposed regulations under § 1.988–2(b)(15) generally provided that currency gain or loss on debt instruments and demand deposits entered into or acquired when the currency in which the item was denominated was hyperinflationary must be realized annually under a mark-to-market methodology. For purposes of determining the character and source (or allocation) of such currency gain or loss, the gain or loss was generally treated as an increase in, or a reduction of, interest income or expense.

The proposed § 1.988–2(b)(15) regulations excluded instruments described in section 988(a)(3)(C) (relating to non-dollar, related-party loans where the rate of interest is at least 10 percentage points higher than the Federal mid-term rate) from these rules. Proposed regulations § 1.988–2(d)(5) and (e)(7) generally provided that currency gain or loss realized with respect to section 988 forward contracts, futures contracts, option contracts and similar items (such as currency swap contracts) entered into or acquired when the currency in which such an item is denominated was hyperinflationary was

recognized annually under a mark-to-market methodology.

B. Discussion of Comments and Final Regulations

1. Comments and the Treasury and IRS's Responses

One of the comments responding to the proposed regulations criticized the exclusion of loans described in section 988(a)(3)(C) from the rules of proposed regulation § 1.988–2(b)(15). The comment noted that it was inappropriate to treat related-party loans differently from loans between unrelated parties in this context.

Proposed regulation § 1.988–2(b)(15) excluded loans subject to section 988(a)(3)(C) from the mark-to-market rule of the proposed regulations because the loans were already subject to mark-to-market treatment under section 988(a)(3)(C), which was enacted to prevent manipulation of the section 904(a) foreign tax credit limitation through related party loans with artificially high interest rates. See H. Conf. Rep. No. 841, 99th Cong., 2d Sess. 668 (1986). However, due to interest income's U.S. source treatment under section 988(a)(3)(C)(ii), mark-to-market treatment under section 988(a)(3)(C), rather than § 1.988–2(b)(15), would be, in most cases, more unfavorable to taxpayers.

Since the rules of proposed regulation § 1.988–2(b)(15) were consistent with the approach of section 988(a)(3)(C) and prevented manipulation of the type Congress addressed in that section, the IRS and Treasury agree that transactions described in section 988(a)(3)(C) should not be excluded from the mark-to-market rule of the final regulations. The IRS and Treasury also have concluded that to the extent a debt instrument is subject to the rules of § 1.988–2(b)(15), the application of section 988(a)(3)(C)'s resourcing rule is not necessary. The final regulations reflect these changes.

The other comment identified the need for coordinating the mark-to-market regime for hyperinflationary instruments under proposed regulation § 1.988–2(b)(15), and the mark-to-market election under proposed regulation § 1.988–5(f) for all section 988 transactions. The final regulations do not include a rule coordinating these two mark-to-market regimes because the mark-to-market election for all section 988 transactions is still in proposed form. Accordingly, the IRS and Treasury have decided that consideration of the proper coordination is most appropriate when the regulations relating to the general mark-to-market election for all section 988 transactions are finalized.

2. Other Changes to the Final Regulations

(a) Source and Character of Gain or Loss

The proposed regulations provided that any exchange gain or loss realized upon marking to market a debt instrument or a demand deposit under proposed regulation § 1.988–2(b)(15)(i) was to be directly allocable to the interest income or interest expense from the debt instrument or deposit. Accordingly, the gain or loss reduced or increased the amount of interest income or interest expense paid or accrued during that year with respect to that instrument or deposit. Additionally, if realized exchange gain exceeded interest expense of an issuer, or realized exchange loss exceeded interest income of a holder or depositor, the character and source of such excess amount were to be determined under the general rules of §§ 1.988–3 and 1.988–4.

The assumption underlying this proposed treatment was that in hyperinflationary conditions, high nominal interest rates perform two functions: compensate lenders for currency loss attributable to the repayment of the principal with a devalued currency, and account for borrowers' currency gain on the repayment of the principal with a devalued currency. In instances, however, where hyperinflationary conditions are subsiding and a lender would actually have currency gain on principal repayment (and the borrower would have currency loss on principal repayment), these assumptions are no longer appropriate. For example, if a lender has currency gain on the marking to market (for currency fluctuations only) of the principal of a debt instrument, high nominal interest rates would not be compensating the lender for the decline in the value of the principal as there would be a gain on the principal.

Accordingly, the final regulations retain the source and character rule of the proposed regulations (direct allocation of the exchange gain or loss against interest expense or income, respectively) when hyperinflationary conditions result in exchange loss to lenders or exchange gain to borrowers on the principal amount of a debt instrument or deposit. However, where a lender has exchange gain or a borrower has exchange loss on the debt instrument—which may occur as hyperinflationary conditions subside—the final regulations clarify that the exchange gain or loss is not allocated against interest expense or income. Rather, the exchange gain or loss is treated under the normal currency character and source rules of §§ 1.988–3 and 1.988–4. Thus, for example, if an issuer has both interest expense and currency loss, the currency loss is sourced and characterized under section 988 and does not affect the determination of interest expense.

(b) Synthetic, Non-hyperinflationary Currency Debt Instruments

The final regulations also make clear that when a debt instrument has interest and principal payments that are to be made by reference to a non-hyperinflationary currency or item (commonly known as interest and principal protection features), the instrument is not marked to market under the final section 988 regulations. This is because the instrument is, in substance, a synthetic non-hyperinflationary instrument and does not experience the distortions associated with a hyperinflationary instrument.

(c) Treatment of Hyperinflationary Contracts

Proposed regulation § 1.988–2(d)(5) generally provided that currency gain or loss on derivative contracts described in § 1.988–1(a)(2)(iii) and denominated in a currency that was hyperinflationary at the time the contract was entered into was to be realized annually under a mark-to-market methodology. This proposed regulation was issued prior to promulgation of the § 1.446–4 regulations (published in the **Federal Register** on July 18, 1994) which requires that, to clearly reflect income, the timing of income, deduction, gain or loss on a hedge must match the timing of income, deduction, gain or loss on the item being hedged. The final regulations modify proposed regulation § 1.988–2(d)(5) by providing that § 1.446–4, to the extent applicable, will take precedence over proposed regulation § 1.988–2(d)(5). This is because the IRS and Treasury believe that a clearer reflection of income is present where the income and deductions arising from an item hedged under § 1.446–4 is matched with the income and deductions arising from the hedge. See § 1.446–4(b).

(d) Demand and Time Deposits

The proposed regulations applied the mark-to-market rules to demand deposits denominated in a currency that was hyperinflationary at the time the deposit was entered into. Under the final regulations, the mark-to-market rules apply to demand and time deposits that provide for payments denominated in or by reference to a currency which is hyperinflationary at

the time the taxpayer enters into or otherwise acquires the deposit, or whose interest rate reflects hyperinflationary conditions in a country. Similar clarifications have been made with respect to the definitions of hyperinflationary debt instruments and currency swap contracts.

3. Abusive Transactions

The Treasury and the IRS are concerned about the use of hyperinflationary currencies in transactions motivated by tax considerations. Because the direction of exchange rates is relatively predictable in hyperinflation economies, some taxpayers have attempted to use such currencies in transactions lacking economic substance. See, e.g., *Agro Science Co.* v. *Commissioner*, T.C. Memo. 1989–687, *aff'd*, 927 F.2d 213 (5th Cir.), *cert. denied*, 502 U.S. 907 (1991). However, section 988 may be applied by the IRS in a manner that reflects the proper timing, source, and character of income, gain, loss, or expense arising from a transaction whose form is not in accordance with its economic substance. §§ 1.988–1(a)(11) and 1.988–2(f); *Agro Science Co.* v. *Commissioner*, *supra*. Accordingly, the rules contained in this Treasury decision will be applied within the framework of these general economic substance principles.

II. Significant Non-periodic Payments and Currency Swaps

The proposed regulations coordinated section 988 with the section 446 regulations pertaining to significant nonperiodic payments. The final regulations maintain this coordination and clarify that exchange gain or loss may be realized on the principal and interest components of a significant nonperiodic payment.

III. Proposed Change to Base Period in Notice of Proposed Rulemaking

Elsewhere in this issue of the **Federal Register**, the IRS and Treasury are publishing a notice of proposed rulemaking that proposes to change the period during which inflation rates are measured in the determination of whether a currency is hyperinflationary for purposes of section 988 (base period). The effect of this change to § 1.988–1(f) (defining hyperinflationary currency for purposes of section 988) is to take into account current year, hyperinflationary conditions, rather than determining whether a currency is hyperinflationary based on the three years prior to the current year. The proposed change relates only to section 988 and not to the dollar approximate separate transactions method of § 1.985–3 (DASTM). However, other sections, such as § 1.267(f)–1(e) (relating to application of the loss disallowance rule of section 267(a)(1) as applied to related party, nonfunctional currency loans), which make reference to the section 988 definition of hyperinflation will be affected.

Special Analyses

It has been determined that this Treasury decision is not a significant regulatory action as defined in Executive Order 12866. Therefore, a regulatory assessment is not required. It has also been determined that section 553(b) of the Administrative Procedure Act (5 U.S.C. chapter 5) and the Regulatory Flexibility Act (5 U.S.C. chapter 6) do not apply to these regulations, and, therefore, a Regulatory Flexibility Analysis is not required. Pursuant to section 7805(f) of the Internal Revenue Code, the notice of proposed rulemaking preceding these regulations was submitted to the Small Business Administration for comment on its impact on small businesses.

Drafting Information: The principal author of these regulations is Roger M. Brown of the Office of the Associate Chief Counsel (International). However, other personnel from the IRS and Treasury Department also participated in their development.

List of Subjects in 26 CFR Part 1

Income taxes, Reporting and recordkeeping requirements.

Adoption of the Amendments to the Regulations

Accordingly, 26 CFR part 1 is amended as follows:

PART 1—INCOME TAXES

Paragraph 1. The authority citation for part 1 continues to read, in part, as follows:

Authority: 26 U.S.C. 7805 * * *

Par. 2. Section 1.988–0 in the Table of Contents is amended by:

1. The entry for § 1.988–2(b)(14)–(15) is removed.
2. An entry for § 1.988–2(b)(14) is added.
3. An entry for § 1.988–2(b)(15) is added.
4. The entry for § 1.988–2(d)(5) is revised.
5. The entry for § 1.988–2(e)(7) is revised.

The revisions and additions read as follows:

§ 1.988–0 Taxation of gain or loss from a section 988 transaction; Table of Contents.

* * * * *

§ 1.988–2 Recognition and computation of exchange gain or loss

* * * * *

(b) * * *

(14) [Reserved]

(15) Debt instruments and deposits denominated in hyperinflationary currencies.

* * * * *

(d) ***

(5) Hyperinflationary contracts.

(e) * * *

(7) Special rules for currency swap contracts in hyperinflationary currencies.

* * * * *

Par. 3. Section 1.988–2 is amended by:

1. Adding paragraph (b)(15).
2. Adding paragraph (d)(5).
3. Adding paragraph (e)(3)(iv).
4. Adding paragraph (e)(7).

The additions read as follows:

§ 1.988–2 Recognition and computation of exchange gain or loss.

* * * * *

(b) * * *

(14) [Reserved]

(15) *Debt instruments and deposits denominated in hyperinflationary currencies*—(i) *In general*. If a taxpayer issues, acquires, or otherwise enters into or holds a hyperinflationary debt instrument (as defined in paragraph (b)(15)(vi)(A) of this section) or a hyperinflationary deposit (as defined in paragraph (b)(15)(vi)(B) of this section) on which interest is paid or accrued that is denominated in (or determined by reference to) a nonfunctional currency of the taxpayer, then the taxpayer shall realize exchange gain or loss with respect to such instrument or deposit for its taxable year determined by reference to the change in exchange rates between—

(A) The later of the first day of the taxable year, or the date the instrument was entered into (or an amount deposited); and

(B) The earlier of the last day of the taxable year, or the date the instrument (or deposit) is disposed of or otherwise terminated.

(ii) *Only exchange gain or loss is realized*. No gain or loss is realized under paragraph (b)(15)(i) by reason of factors other than movement in exchange rates, such as the creditworthiness of the debtor.

(iii) *Special rule for synthetic, non-hyperinflationary currency debt instruments*—(A) *General rule*. Paragraph (b)(15)(i) does not apply to a debt instrument that has interest and principal payments that are to be made by reference to a currency or item that does not reflect hyperinflationary conditions in a country (within the meaning of § 1.988–1(f)).

(B) *Example.* Paragraph (b)(15)(iii)(A) is illustrated by the following example:

Example. When the Turkish lira (TL) is a hyperinflationary currency, A, a U.S. corporation with the U.S. dollar as its functional currency, makes a 5 year, 100,000 TL-denominated loan to B, an unrelated corporation, at a 10% interest rate when 1,000 TL equals $1. Under the terms of the debt instrument, B must pay interest annually to A in amount of Turkish lira that is equal to $100. Also under the terms of the debt instrument, B must pay A upon maturity of the debt instrument an amount of Turkish lira that is equal to $1,000. Although the principal and interest are payable in a hyperinflationary currency, the debt instrument is a synthetic dollar debt instrument and is not subject to paragraph (b)(15)(i) of this section.

(iv) *Source and character of gain or loss*—(A) *General rule for hyperinflationary conditions.* The rules of this paragraph (b)(15)(iv)(A) shall apply to any taxpayer that is either an issuer of (or obligor under) a hyperinflationary debt instrument or deposit and has currency gain on such debt instrument or deposit, or a holder of a hyperinflationary debt instrument or deposit and has currency loss on such debt instrument or deposit. For purposes of subtitle A of the Internal Revenue Code, any exchange gain or loss realized under paragraph (b)(15)(i) of this section is directly allocable to the interest expense or interest income, respectively, from the debt instrument or deposit (computed under this paragraph (b)), and therefore reduces or increases the amount of interest income or interest expense paid or accrued during that year with respect to that instrument or deposit. With respect to a debt instrument or deposit during a taxable year, to the extent exchange gain realized under paragraph (b)(15)(i) of this section exceeds interest expense of an issuer, or exchange loss realized under paragraph (b)(15)(i) of this section exceeds interest income of a holder or depositor, the character and source of such excess amount shall be determined under §§ 1.988–3 and 1.988–4.

(B) *Special rule for subsiding hyperinflationary conditions.* If the taxpayer is an issuer of (or obligor under) a hyperinflationary debt instrument or deposit and has currency loss, or if the taxpayer is a holder of a hyperinflationary debt instrument or deposit and has currency gain, then for purposes of subtitle A of the Internal Revenue Code, the character and source of the currency gain or loss is determined under §§ 1.988–3 and 1.988–4. Thus, if an issuer has both interest expense and currency loss, the currency loss is sourced and characterized under section 988, and does not affect the determination of interest expense.

(v) *Adjustment to principal or basis.* Any exchange gain or loss realized under paragraph (b)(15)(i) of this section is an adjustment to the functional currency principal amount of the issuer, functional currency basis of the holder, or the functional currency amount of the deposit. This adjusted amount or basis is used in making subsequent computations of exchange gain or loss, computing the basis of assets for purposes of allocating interest under §§ 1.861–9T through 1.861–12T and 1.882–5, or making other determinations that may be relevant for computing taxable income or loss.

(vi) *Definitions*—(A) *Hyperinflationary debt instrument.* A hyperinflationary debt instrument is a debt instrument that provides for—

(*1*) Payments denominated in or determined by reference to a currency that is hyperinflationary (as defined in § 1.988–1(f)) at the time the taxpayer enters into or otherwise acquires the debt instrument; or

(*2*) Payments denominated in or determined by reference to a currency that is hyperinflationary (as defined in § 1.988–1(f)) during the taxable year, and the terms of the instrument provide for the adjustment of principal or interest payments in a manner that reflects hyperinflation. For example, a debt instrument providing for a variable interest rate based on local conditions and generally responding to changes in the local consumer price index will reflect hyperinflation.

(B) *Hyperinflationary deposit.* A hyperinflationary deposit is a demand or time deposit or similar instrument issued by a bank or other financial institution that provides for—

(*1*) Payments denominated in or determined by reference to a currency that is hyperinflationary (as defined in § 1.988–1(f)) at the time the taxpayer enters into or otherwise acquires the deposit; or

(*2*) Payments denominated in or determined by reference to a currency that is hyperinflationary (as defined in § 1.988–1(f)) during the taxable year, and the terms of the deposit provide for the adjustment of the deposit amount or interest payments in a manner that reflects hyperinflation.

(vii) *Interaction with other provisions*—(A) *Interest allocation rules.* In determining the amount of interest expense, this paragraph (b)(15) applies before §§ 1.861–9T through 1.861–12T, and 1.882–5.

(B) *DASTM.* With respect to a qualified business unit that uses the United States dollar approximate separate transactions method of accounting described in § 1.985–3, paragraph (b)(15)(i) of this section does not apply.

(C) *Interaction with section 988(a)(3)(C).* Section 988(a)(3)(C) does not apply to a debt instrument subject to the rules of paragraph (b)(15)(i) of this section.

(D) *Hedging rules.* To the extent § 1.446–4 or 1.988–5 apply, the rules of paragraph (b)(15)(i) of this section will not apply. This paragraph (b)(15)(vii)(D) does not apply if the application of § 1.988–5 results in hyperinflationary debt instrument or deposit described in paragraph (b)(15)(vi)(A) or (B) of this section.

(viii) *Effective date.* This paragraph (b)(15) applies to transactions entered into after February 14, 2000.

* * * * *

(d) * * *

(5) *Hyperinflationary contracts*—(i) *In general.* If a taxpayer acquires or otherwise enters into a hyperinflationary contract (as defined in paragraph (d)(5)(ii) of this section) that has payments to be made or received that are denominated in (or determined by reference to) a nonfunctional currency of the taxpayer, then the taxpayer shall realize exchange gain or loss with respect to such contract for its taxable year determined by reference to the change in exchange rates between—

(A) The later of the first day of the taxable year, or the date the contract was acquired or entered into; and

(B) The earlier of the last day of the taxable year, or the date the contract is disposed of or otherwise terminated.

(ii) *Definition of hyperinflationary contract.* A hyperinflationary contract is a contract described in paragraph (d)(1) of this section that provides for payments denominated in or determined by reference to a currency that is hyperinflationary (as defined in § 1.988–1(f)) at the time the taxpayer acquires or otherwise enters into the contract.

(iii) *Interaction with other provisions*—(A) *DASTM.* With respect to a qualified business unit that uses the United States dollar approximate separate transactions method of accounting described in § 1.985–3, this paragraph (d)(5) does not apply.

(B) *Hedging rules.* To the extent § 1.446–4 or 1.988–5 apply, this paragraph (d)(5) does not apply.

(C) *Adjustment for subsequent transactions.* Proper adjustments must be made in the amount of any gain or loss subsequently realized for gain or loss taken into account by reason of this paragraph (d)(5).

(iv) *Effective date.* This paragraph (d)(5) is applicable to transactions acquired or otherwise entered into after February 14, 2000.

(e) * * *

(3) * * *

(iv) *Coordination with § 1.446–3(g)(4) regarding swaps with significant nonperiodic payments.* The rules of § 1.446–3(g)(4) apply to any currency swap with a significant nonperiodic payment. Section 1.446–3(g)(4) applies before this paragraph (e)(3). Thus, if § 1.446–3(g)(4) applies, currency gain or loss may be realized on the loan. This paragraph (e)(3)(iv) applies to transactions entered into after February 14, 2000.

* * * * *

(7) *Special rules for currency swap contracts in hyperinflationary currencies*—(i) *In general.* If a taxpayer enters into a hyperinflationary currency swap (as defined in paragraph (e)(7)(iv) of this section), then the taxpayer realizes exchange gain or loss for its taxable year with respect to such instrument determined by reference to the change in exchange rates between—

(A) The later of the first day of the taxable year, or the date the instrument was entered into (by the taxpayer); and

(B) The earlier of the last day of the taxable year, or the date the instrument is disposed of or otherwise terminated.

(ii) *Adjustment to principal or basis.* Proper adjustments are made in the amount of any gain or loss subsequently realized for gain or loss taken into account by reason of this paragraph (e)(7).

(iii) *Interaction with DASTM.* With respect to a qualified business unit that uses the United States dollar approximate separate transactions method of accounting described in § 1.985–3, this paragraph (e)(7) does not apply.

(iv) *Definition of hyperinflationary currency swap contract.* A hyperinflationary currency swap contract is a currency swap contract that provides for—

(A) Payments denominated in or determined by reference to a currency that is hyperinflationary (as defined in § 1.988–1(f)) at the time the taxpayer enters into or otherwise acquires the currency swap; or

(B) Payments that are adjusted to take into account the fact that the currency is hyperinflationary (as defined in § 1.988–1(f)) during the current taxable year. A currency swap contract that provides for periodic payments determined by reference to a variable interest rate based on local conditions and generally responding to changes in the local consumer price index is an example of this latter type of currency swap contract.

(v) *Special effective date for nonfunctional hyperinflationary currency swap contracts.* This paragraph (e)(7) applies to transactions entered into after February 14, 2000.

* * * * *

Approved: December 13, 1999.

Robert E. Wenzel,

Deputy Commissioner of Internal Revenue.

Jonathan Talisman,

Acting Assistant Secretary of the Treasury.

[FR Doc. 00–644 Filed 1–12–00; 8:45 am]

BILLING CODE 4830–01–P

DEPARTMENT OF THE TREASURY

Internal Revenue Service

26 CFR Parts 301 and 602

[TD 8861]

RIN 1545–AW96

Private Foundation Disclosure Rules

AGENCY: Internal Revenue Service (IRS), Treasury.

ACTION: Final regulations.

SUMMARY: This document contains final regulations that amend the regulations relating to the public disclosure requirements described in section 6104(d) of the Internal Revenue Code. These final regulations implement changes made by the Tax and Trade Relief Extension Act of 1998, which extended to private foundations the same rules regarding public disclosure of annual information returns that apply to other tax-exempt organizations. These final regulations provide guidance for private foundations required to make copies of applications for recognition of exemption and annual information returns available for public inspection and to comply with requests for copies of those documents.

DATES: *Effective Date:* These regulations are effective March 13, 2000.

Applicability Date: Except as provided below, these regulations are applicable to private foundations on or after March 13, 2000. These regulations are not applicable to any private foundation annual information return the due date for which (determined with regard to any extension of time for filing) is before March 13, 2000.

FOR FURTHER INFORMATION CONTACT: Michael B. Blumenfeld, (202) 622–6070 (not a toll-free number).

SUPPLEMENTARY INFORMATION:

Paperwork Reduction Act

The collections of information contained in these final regulations have been reviewed and approved by the Office of Management and Budget in accordance with the Paperwork Reduction Act of 1995 (44 U.S.C. 3507) under control number 1545–1655. Responses to these collections of information are mandatory.

An agency may not conduct or sponsor, and a person is not required to respond to, a collection of information unless it displays a valid control number assigned by the Office of Management and Budget.

The estimated average annual burden per respondent/recordkeeper is 30 minutes.

Comments on the accuracy of this burden estimate and suggestions for reducing the burden should be sent to the Internal Revenue Service, Attn: IRS Reports Clearance Officer, OP:FS:FP, Washington, DC 20224, and to the Office of Management and Budget, Attn: Desk Officer for the Department of the Treasury, Office of Information and Regulatory Affairs, Washington, DC 20503.

Books or records relating to this collection of information must be retained as long as their contents may become material in the administration of any internal revenue law. Generally, tax returns and tax return information are confidential, as required by 26 U.S.C. 6103.

Background

This document amends §§ 301.6104(d)–1 through 301.6104(d)–5 of the Procedure and Administration Regulations (26 CFR Part 301) relating to the section 6104(d) public disclosure rules applicable to tax-exempt organizations (organizations described in section 501 (c) or (d) and exempt from taxation under section 501(a)) and certain nonexempt charitable trusts and nonexempt private foundations referenced in section 6033(d). The amendments remove existing § 301.6104(d)–1 (relating to public inspection of private foundation annual information returns). The amendments also revise §§ 301.6104(d)–2 through 301.6104(d)–5 to apply the provisions to all tax-exempt organizations, nonexempt charitable trusts described in section 4947(a)(1) and nonexempt private foundations. In addition, the amendments redesignate existing §§ 301.6104(d)–2 through 301.6104(d)–5 as §§ 301.6104(d)–0 through 301.6104(d)–3, respectively.

Description of Current Law Disclosure Requirements Applicable to Private Foundations

Section 6104(d), as in effect prior to the effective date of the Tax and Trade Relief Extension Act of 1998 (Division J of H.R. 4328, the Omnibus Consolidated and Emergency Supplemental Appropriations Act, 1999) (Pub. L. 105–277, 112 Stat. 2681) (with respect to private foundations), requires a private foundation to make its annual information returns available for public inspection at its principal office during regular business hours for a period of 180 days after the foundation publishes notice of the availability of its return. A private foundation must publish the notice not later than the due date of the return (determined with regard to any extension of time for filing) in a newspaper having general circulation in the county in which the principal office of the foundation is located. Section 6104(e), as in effect prior to the effective date of the Tax and Trade Relief Extension Act of 1998 (with respect to private foundations), requires a private foundation to allow public inspection of the foundation's application for recognition of exemption at the foundation's principal office (and certain regional or district offices). Section 6104(e) also requires a private foundation to provide copies of its exemption application upon request. The requirement to provide copies of an exemption application upon request becomes effective, however, only after the Secretary of the Treasury issues final regulations applicable to private foundations that describe how the requirement is inapplicable if the private foundation makes its exemption application widely available or obtains an IRS determination that a particular request is part of a harassment campaign.

Amendments Made by the Tax and Trade Relief Extension Act of 1998

The Tax and Trade Relief Extension Act of 1998 was enacted on October 21, 1998. Among its provisions, it amended section 6104(e) of the Code to apply to private foundations the same rules regarding public disclosure of annual information returns that apply to other tax-exempt organizations. In addition, the Tax and Trade Relief Extension Act of 1998 repealed existing section 6104(d), and redesignated section 6104(e), as amended, as new section 6104(d). Section 6104(d), as amended by the Tax and Trade Relief Extension Act of 1998, requires each tax-exempt organization, including one that is a private foundation, to allow public inspection at its principal office (and at certain regional or district offices) and to comply with requests, made either in person or in writing, for copies of the organization's application for recognition of exemption and the organization's three most recent annual information returns. Congress also intended that nonexempt charitable trusts described in section 4947(a)(1) and nonexempt private foundations comply with the expanded public disclosure requirements, just as the information reporting requirements of section 6033, pursuant to section 6033(d), apply to these entities. See Joint Committee on Taxation, General Explanation of Tax Legislation Enacted in 1998 (JCS–6–98), November 24, 1998, at 242, fn. 102.

The Tax and Trade Relief Extension Act of 1998 amendments apply to requests made after the later of December 31, 1998, or the 60th day after the Secretary of the Treasury issues final regulations referred to in section 6104(d)(4) (relating to when documents are made widely available and when a particular request is considered part of a harassment campaign). On April 9, 1999, the IRS published in the **Federal Register** (64 FR 17279) final regulations under section 6104(d) applicable to tax-exempt organizations other than private foundations. Accordingly, section 6104(d), as amended by the Tax and Trade Relief Extension Act of 1998, became effective with respect to tax-exempt organizations other than private foundations on June 8, 1999.

On August 10, 1999, the IRS published a notice of proposed rulemaking under section 6104(d) in the **Federal Register** (64 FR 43324) that extends the recently-published final regulations under section 6104(d) to apply to private foundations and modifies those final regulations in several respects. The IRS received a few comments on the proposed regulations. No public hearing on the regulations was requested or held. After consideration of all the comments, the proposed regulations are adopted with minor clarifying modifications by this Treasury Decision. The provisions and significant comments are discussed below.

Explanation of the Provisions

These final regulations amend the final regulations under section 6104(d) that were published in the **Federal Register** (64 FR 17279) on April 9, 1999 (the April 9, 1999 final regulations). The amendments clarify that the term *annual information return* includes any return that is required to be filed under section 6033. For a private foundation, these returns include Form 990–PF and Form 4720. The amendments clarify that, unlike other tax-exempt organizations, a private foundation must disclose to the general public the names and addresses of its contributors, consistent with section 6104(d)(3). The amendments also clarify that, for purposes of section 6104(d), the terms *tax-exempt organization* and *private foundation* include nonexempt private foundations and nonexempt charitable trusts described in section 4947(a)(1) that are subject to the information reporting requirements of section 6033. Finally, the amendments remove existing § 301.6104(d)–1 and redesignate existing §§ 301.6104–2 through 301.6104(d)–5, as §§ 301.6104(d)–0 through 301.6104(d)–3, respectively.

Until March 13, 2000, private foundations remain subject to section 6104(d) and section 6104(e), as in effect prior to the Tax and Trade Relief Extension Act of 1998, and existing § 301.6104(d)–1. Thereafter, private foundations are subject to the public inspection requirements of section 6104(d), as in effect prior to the Tax and Trade Relief Extension Act of 1998, and existing § 301.6104(d)–1 with respect to any annual information return the due date (determined with regard to any extension of time for filing) for which is prior to March 13, 2000.

Summary of Comments

One commenter suggested another method to satisfy the widely available exception to the requirement that a private foundation provide a copy of its applicable documents upon request. The commenter would permit a private foundation to satisfy the widely available exception by: (1) Filing copies of its documents with a state agency that, in turn, makes the documents available for public inspection, and (2) publishing a notice in a newspaper of general circulation stating where the documents are available. The Tax and Trade Relief Extension Act of 1998 repealed the requirement (in former section 6104(d)) that private foundations publish notice of the availability of their annual information returns with respect to annual information returns due after the effective date of these final regulations. The Act extended the same public disclosure requirements that apply to all other tax-exempt organizations to private foundations, including the widely available exception. The proposed regulations specify that a private foundation satisfies the widely available exception by posting its documents on the World Wide Web as described in the April 9, 1999 final

regulations. After carefully considering this comment, the IRS and the Treasury Department have concluded that providing copies of the applicable documents to a state agency and publishing notice would not make those documents widely available. We reached our conclusion because the method suggested by the commenter could impose a substantial inconvenience to members of the public. Therefore, the IRS and the Treasury Department did not adopt this suggestion.

A few commenters asked that these final regulations not require private foundations to disclose to the general public the identities of their contributors. Section 6104(d) requires public disclosure of all the information contained on an exemption application and an annual information return filed with the IRS, unless the information is specifically excepted from disclosure. Section 6104(d)(3) specifically excepts from disclosure the names and addresses of any contributor to an organization which is not a private foundation. By its terms, this exception does not apply to private foundations. The IRS and the Treasury Department believe the rule of the proposed regulation is consistent with the statute and Congressional intent and, therefore, did not change this provision.

One commenter asked that these final regulations clarify how the disclosure requirements apply to a supporting organization described in section 509(a)(3). Section 509(a) provides that an organization described in section 501(c)(3) is a private foundation if it does not meet the requirements of section 509(a) (1), (2), (3), or (4). Therefore, an organization that is described in section 501(c)(3) and classified as a supporting organization under section 509(a)(3) is not a private foundation. The disclosure requirements under section 6104(d) apply to supporting organizations described in section 509(a)(3) in the same manner as they apply to all other tax-exempt organizations that are not private foundations. The proposed regulations define the terms *tax-exempt organization* and *private foundation* consistent with the applicable statutory provisions, and the IRS and the Treasury Department have determined that further regulatory clarification is not necessary in this regard.

Another commenter expressed concern that some private foundations may not have copies of their exemption applications. This commenter suggested that these final regulations only require private foundations formed after 1990 to disclose their exemption applications. Since July 15, 1987, a tax-exempt organization, including one that is a private foundation, has been required under section 6104 to make its exemption application available for public inspection. See section 10702(b) of the Omnibus Budget Reconciliation Act of 1987 (Pub. L. 100–203) and Notice 88–120 (1988–2 C.B. 454). Under the proposed regulations, a private foundation that filed its exemption application before July 15, 1987 is required to make available for public inspection a copy of its application only if it had a copy of its application on July 15, 1987. Thus, these final regulations do not change this provision of the proposed regulations.

One commenter stated that the applicable date in the proposed regulations, which would eliminate the requirement that private foundations publish notice of the availability of their annual information returns, is inconsistent with the effective date specified in the House Committee Report to the Tax and Trade Relief Extension Act of 1998 (H.R. Rep. No. 105–817). This commenter requested that the final regulations add a rule that prevents the IRS from asserting a late filing penalty against a private foundation whose return is rejected by the IRS because the foundation filed the return on or after June 8, 1999 (the effective date of the April 9, 1999 final regulations) without proof that it satisfied the publication of notice requirement. Section 6104(d), as in effect prior to the effective date of the Tax and Trade Relief Extension Act of 1998, provides that a private foundation must publish a notice of the availability of its return not later than the due date of the return (determined with regard to any extension of time for filing). Section 1.6033–3(b) of the regulations requires a private foundation to attach a copy of the notice to its return.

The Tax and Trade Relief Extension Act of 1998 repealed the publication of notice requirement of section 6104(d) effective for private foundation annual information returns due after the later of December 31, 1998 or 60 days after the Treasury Department issues final regulations that explain how requested documents may be made widely available or when requests for documents are part of a harassment campaign. The April 9, 1999 final regulations do not apply to private foundations and, therefore, the issuance of those regulations did not trigger the repeal of the publication of notice requirement. Indeed, the April 9, 1999 final regulations stated explicitly that, until the IRS issues final regulations under section 6104(d) applicable to private foundations, private foundations continue to be governed by the existing § 301.6104(d)–1 requirements relating to public disclosure of private foundation annual information returns.

The IRS and the Treasury Department believe the effective date of the repeal of the publication of notice requirement stated in the proposed regulations is consistent with both the statute and the legislative history. Further, the IRS and the Treasury Department believe it is important to retain one public disclosure standard for private foundations until another is finally adopted. Accordingly, the IRS and the Treasury Department did not modify these final regulations as suggested.

Finally, one commenter expressed concern that disclosure in some instances could adversely affect the charitable operations of some small operating private foundations that advance unpopular causes or desire to maintain a low profile. This commenter suggested that the final regulations should authorize the Secretary to grant a waiver from some or all of the disclosure requirements if a small operating foundation establishes that, without the waiver, its charitable operations could be adversely affected and it provides alternative methods of disclosure that enhance oversight and public accountability. Section 6104(d), however, does not authorize the Secretary to grant waivers except in the case of a harassment campaign determination. Moreover, all tax-exempt organizations have the option under the regulations of avoiding having to comply with requests for copies of documents by making such documents widely available on the Internet. Therefore, the IRS and the Treasury Department did not adopt this suggestion.

Effective Date

These final regulations are applicable to private foundations on March 13, 2000.

Special Analyses

It is hereby certified that the collections of information in these regulations will not have a significant economic impact on a substantial number of small entities. This certification is based on the fact that the average time required to maintain and disclose the information required under these regulations is estimated to be 30 minutes for each private foundation. This estimate is based on the assumption that, on average, a private foundation will receive one request per year to inspect or provide copies of its application for tax exemption and its

annual information returns. Approximately 0.1 percent of the private foundations affected by these regulations will be subject to the reporting requirements contained in the regulations. It is estimated that annually, approximately 65 private foundations will make their documents widely available by posting them on the Internet. In addition, it is estimated that annually, approximately 3 private foundations will file an application for a determination that they are the subject of a harassment campaign such that a waiver of the obligation to provide copies of their applications for tax exemption and their annual information returns is in the public interest. The average time required to complete, assemble and file an application describing a harassment campaign is expected to be 5 hours. Because applications for a harassment campaign determination will be filed so infrequently, they will have no effect on the average time needed to comply with the requirements in these regulations. In addition, a private foundation is allowed in these regulations to charge a reasonable fee for providing copies to requesters. Therefore, it is estimated that it will cost a private foundation less than $10 per year to comply with these regulations, which is not a significant economic impact. Therefore, a Regulatory Flexibility Analysis under the Regulatory Flexibility Act (5 U.S.C. chapter 6) is not required. Pursuant to section 7805(f) of the Internal Revenue Code, the notice of proposed rulemaking was submitted to the Chief Counsel for Advocacy of the Small Business Administration for comment on its impact on small business.

Drafting Information: The principal author of these regulations is Michael B. Blumenfeld, Office of Associate Chief Counsel (Employee Benefits and Exempt Organizations), IRS. Other personnel from the IRS and Treasury Department also participated in their development.

List of Subjects

26 CFR Part 301

Employment taxes, Estate taxes, Excise taxes, Gift taxes, Income taxes, Penalties, Reporting and recordkeeping requirements.

26 CFR Part 602

Reporting and recordkeeping requirements.

Adoption of Amendments to the Regulations

Accordingly, 26 CFR parts 301 and 602 are amended as follows:

PART 301—PROCEDURE AND ADMINISTRATION

Paragraph 1. The authority citation for part 301 is amended by adding entries in numerical order to read in part as follows:

Authority: 26 U.S.C. 7805 * * *

Section 301.6104(d)–2 also issued under 26 U.S.C. 6104(d)(3);

Section 301.6104(d)–3 also issued under 26 U.S.C. 6104(d)(3); * * *

§ 301.6104(d)–1 [Removed]

Par. 2. Section 301.6104(d)–1 is removed.

§ 301.6104(d)–2 [Redesignated as § 301.6104(d)–0]

Par. 3. Section 301.6104(d)–2 is redesignated as § 301.6104(d)–0.

Par. 4. Newly designated § 301.6104(d)–0 is revised to read as follows:

§ 301.6104(d)–0 Table of contents.

This section lists the major captions contained in §§ 301.6104(d)–1 through 301.6104(d)–3 as follows:

§ 301.6104(d)–1 Public inspection and distribution of applications for tax exemption and annual information returns of tax-exempt organizations.

(a) In general.
(b) Definitions.
(1) Tax-exempt organization.
(2) Private foundation.
(3) Application for tax exemption.
(i) In general.
(ii) No prescribed application form.
(iii) Exceptions.
(iv) Local or subordinate organizations.
(4) Annual information return.
(i) In general.
(ii) Exceptions.
(iii) Returns more than 3 years old.
(iv) Local or subordinate organizations.
(5) Regional or district offices.
(i) In general.
(ii) Site not considered a regional or district office.
(c) Special rules relating to public inspection.
(1) Permissible conditions on public inspection.
(2) Organizations that do not maintain permanent offices.
(d) Special rules relating to copies.
(1) Time and place for providing copies in response to requests made in person.
(i) In general.
(ii) Unusual circumstances.
(iii) Agents for providing copies.
(2) Request for copies in writing.
(i) In general.
(ii) Time and manner of fulfilling written requests.
(A) In general.
(B) Request for a copy of parts of document.
(C) Agents for providing copies.
(3) Fees for copies.
(i) In general.
(ii) Form of payment.
(A) Request made in person.
(B) Request made in writing.
(iii) Avoidance of unexpected fees.
(iv) Responding to inquiries of fees charged.
(e) Documents to be provided by regional and district offices.
(f) Documents to be provided by local and subordinate organizations.
(1) Applications for tax exemption.
(2) Annual information returns.
(3) Failure to comply.
(g) Failure to comply with public inspection or copying requirements.
(h) Effective date.
(1) In general.
(2) Private foundation annual information returns.

§ 301.6104(d)–2 Making applications and returns widely available.

(a) In general.
(b) Widely available.
(1) In general.
(2) Internet posting.
(i) In general.
(ii) Transition rule.
(iii) Reliability and accuracy.
(c) Discretion to prescribe other methods for making documents widely available.
(d) Notice requirement.
(e) Effective date.

§ 301.6104(d)–3 Tax-exempt organization subject to harassment campaign.

(a) In general.
(b) Harassment.
(c) Special rule for multiple requests from a single individual or address.
(d) Harassment determination procedure.
(e) Effect of a harassment determination.
(f) Examples.
(g) Effective date.

§ 301.6104(d)–3 [Redesignated as § 301.6104(d)–1]

Par. 5. Section 301.6104(d)–3 is redesignated as § 301.6104(d)–1.

Par. 6. Newly designated § 301.6104(d)–1 is amended as follows:

1. Revise the section heading.

1a. Paragraph (a) is amended as follows:

a. Remove the language ‘‘, other than a private foundation (as defined in paragraph (b)(2) of this section),’’ from the first sentence.

b. Remove the language ‘‘, other than a private foundation,’’ from the second sentence.

c. Remove the language ‘‘§§ 301.6104(d)–4 and 301.6104(d)–5’’ from the fourth sentence and add ‘‘§§ 301.6104(d)–2 and 301.6104(d)–3’’ in its place.

2. In paragraph (b) introductory text, remove the language ‘‘§§ 301.6104(d)–4 and 301.6104(d)–5’’ and add ‘‘§§ 301.6104(d)–2 and 301.6104(d)–3’’ in its place.

3. In paragraph (b)(1), add a sentence at the end of the paragraph.

4. In paragraph (b)(2), add the language ‘‘or a nonexempt charitable

trust described in section 4947(a)(1) or a nonexempt private foundation subject to the information reporting requirements of section 6033 pursuant to section 6033(d)'' at the end of the sentence.

5. In paragraph (b)(3)(iii)(B), remove the word ''or'' at the end of the paragraph.

6. Redesignate paragraph (b)(3)(iii)(C) as paragraph (b)(3)(iii)(D) and add a new paragraph (b)(3)(iii)(C).

7. In paragraph (b)(4)(i), remove the last two sentences and add three sentences in their place.

8. Paragraph (b)(4)(ii) is amended as follows:

a. Remove the language '', and the return of a private foundation'' from the first sentence.

b. Revise the last sentence.

9. Revise paragraph (h).

The revisions and additions read as follows:

§ 301.6104(d)–1 Public inspection and distribution of applications for tax exemption and annual information returns of tax-exempt organizations.

* * * * *

(b) * * *

(1) * * * The term tax-exempt organization also includes any nonexempt charitable trust described in section 4947(a)(1) or nonexempt private foundation that is subject to the reporting requirements of section 6033 pursuant to section 6033(d).

* * * * *

(3) * * *

(iii) * * *

(C) In the case of a tax-exempt organization other than a private foundation, the name and address of any contributor to the organization; or

* * * * *

(4) * * * (i) * * * Returns filed pursuant to section 6033 include Form 990, Return of Organization Exempt From Income Tax, Form 990–PF, Return of Private Foundation, or any other version of Form 990 (such as Forms 990–EZ or 990–BL, except Form 990–T) and Form 1065. Each copy of a return must include all information furnished to the Internal Revenue Service on the return, as well as all schedules, attachments and supporting documents. For example, in the case of a Form 990, the copy must include Schedule A of Form 990 (containing supplementary information on section 501(c)(3) organizations), and those parts of the return that show compensation paid to specific persons (currently, Part V of Form 990 and Parts I and II of Schedule A of Form 990).

(ii) * * * In the case of a tax-exempt organization other than a private foundation, the term *annual information return* does not include the name and address of any contributor to the organization.

* * * * *

(h) *Effective date*— (1) *In general.* For a tax-exempt organization, other than a private foundation, this section is applicable June 8, 1999. For a private foundation, this section is applicable (except as provided in paragraph (h)(2) of this section) beginning March 13, 2000.

(2) *Private foundation annual information returns.* This section does not apply to any private foundation return the due date for which (determined with regard to any extension of time for filing) is before the applicable date for private foundations specified in paragraph (h)(1) of this section.

§ 301.6104(d)–4 [Redesignated as § 301.6104(d)–2]

Par. 7. Section 301.6104(d)–4 is redesignated as § 301.6104(d)–2.

Par. 8. Newly designated § 301.6104(d)–2 is amended as follows:

1. In paragraph (a), remove the language ''§ 301.6104(d)–3(a)'' from each place it appears and add ''§ 301.6104(d)–1(a)'' in each place, respectively.

2. Revise paragraph (e).

The revision reads as follows:

§ 301.6104(d)–2 Making applications and returns widely available.

* * * * *

(e) *Effective date.* For a tax-exempt organization, other than a private foundation, this section is applicable June 8, 1999. For a private foundation, this section is applicable beginning March 13, 2000.

§ 301.6104(d)–5 [Redesignated as § 301.6104(d)–3]

Par. 9. Section 301.6104(d)–5 is redesignated as § 301.6104(d)–3.

Par. 10. Newly designated § 301.6104(d)–3 is amended as follows:

1. In paragraph (a), remove the language ''§ 301.6104(d)–3(a)'' and add ''§ 301.6104(d)–1(a)'' in its place.

2. Revise paragraph (g).

The revision reads as follows:

§ 301.6104(d)–3 Tax-exempt organization subject to harassment campaign.

* * * * *

(g) *Effective date.* For a tax-exempt organization, other than a private foundation, this section is applicable June 8, 1999. For a private foundation, this section is applicable beginning March 13, 2000.

PART 602—OMB CONTROL NUMBERS UNDER THE PAPERWORK REDUCTION ACT

Par. 11. The authority citation for part 602 continues to read as follows:

Authority: 26 U.S.C. 7805.

Par. 12. In § 602.101, paragraph (b) is amended by removing the entries for 301.6104(d)–4 and 301.6104(d)–5, by revising the entries for 301.6104(d)–1 and 301.6104(d)–3, and by adding a new entry for 301.6104(d)–2 in numerical order to the table to read as follows:

§ 602.101 OMB Control numbers.

* * * * *

(b) * * *

CFR part or section where identified and described	Current OMB control No.
* * * * *	
301.6104(d)–1	1545–1655
301.6104(d)–2	1545–1655
301.6104(d)–3	1545–1655
* * * * *	

Approved: December 23, 1999.

Robert E. Wenzel,

Deputy Commissioner of Internal Revenue.

Jonathan Talisman,

Acting Assistant Secretary of the Treasury (Tax Policy).

[FR Doc. 00–278 Filed 1–12–00; 8:45 am]

BILLING CODE 4830–01–P

DEPARTMENT OF THE TREASURY

Fiscal Service

31 CFR Part 317

Regulations Governing Agencies for Issue of United States Savings Bonds

AGENCY: Bureau of the Public Debt, Fiscal Service, Treasury.

ACTION: Final rule.

SUMMARY: We're amending 31 CFR part 317 to remove the restriction on non-federally chartered credit unions serving as issuing agents for United States savings bonds. Currently, only federal credit unions are permitted to serve as issuing agents, although the paying agent regulations, found at 31 CFR part 321, have no such limitation. This amendment would provide that credit unions chartered or incorporated under state, territorial, District of Columbia, or Commonwealth of Puerto Rico law may also serve as issuing agents. This change will bring the issuing agent regulations in line with paying agent regulations as to credit unions.

DATES: Effective January 13, 2000.

ADDRESSES: You can download this final rule at the following World Wide Web address: <http://www.publicdebt.treas.gov>. You may also inspect and copy this final rule at: Treasury Department Library, Freedom of Information Act (FOIA) Collection, Room 5030, Main Treasury Building, 1500 Pennsylvania Ave., NW, Washington, DC 20220. Before visiting, you must call (202) 622–0990 for an appointment.

FOR FURTHER INFORMATION CONTACT:

- Wallace L. Earnest, Director, Division of Staff Services, Savings Bond Operations Office, Bureau of the Public Debt, at (304) 480–6319 or <wearnest@bpd.treas.gov>
- Susan J. Klimas, Attorney-Adviser, Office of the Chief Counsel, Bureau of the Public Debt, at (304) 480–3688 or <sklimas@bpd.treas.gov>
- Edward C. Gronseth, Deputy Chief Counsel, Bureau of the Public Debt, at (304) 480–3692 or <egronset@bpd.treas.gov>

SUPPLEMENTARY INFORMATION: 31 CFR 317.2, is being amended by removing the limitation on credit unions serving as issuing agents for United States savings bonds. Currently, only federal credit unions may serve as issuing agents. With this amendment, credit unions chartered or incorporated under the laws of states, territories, the District of Columbia, and the Commonwealth of Puerto Rico may also serve as issuing agents. This amendment will make the issuing agent regulations consistent with the paying agent regulations for savings bonds, found at 31 CFR part 321, which permits credit unions chartered or incorporated under federal, state, territorial, District of Columbia, and Commonwealth of Puerto Rico laws to serve as paying agents.

Procedural Requirements

This final rule does not meet the criteria for a ''significant regulatory action,'' as defined in Executive Order 12866. Therefore, the regulatory review procedures contained therein do not apply.

This final rule relates to matters of public contract and procedures for United States securities. The notice and public procedures requirements of the Administrative Procedure Act are inapplicable, pursuant to 5 U.S.C. 553(a)(2).

As no notice of proposed rulemaking is required, the Regulatory Flexibility Act (5 U.S.C. 601, *et seq.*) does not apply.

We ask for no new collections of information in this final rule. Therefore, the Paperwork Reduction Act (44 U.S.C. 3507) does not apply.

List of Subjects in 31 CFR Part 317

Bonds, Electronic funds transfers, Federal Reserve System, Government securities, Securities.

1. The authority citation for part 317 continues to read as follows:

Authority: 2 U.S.C. 901; 5 U.S.C. 301; 12 U.S.C. 391; 12 U.S.C. 1767; and 31 U.S.C. 3105.

2. Amend § 317.2 by revising the introductory text and paragraph (a) to read as follows:

§ 317.2 Organizations authorized to act.

The following organizations are eligible to apply for qualification and to serve as savings bond issuing agents:

(a) Banks, credit unions, trust companies and savings institutions, if they are chartered by or incorporated under the laws of the United States, any State or Territory of the United States, the District of Columbia, or the Commonwealth of Puerto Rico.

* * * * *

Dated: January 6, 2000.

Donald V. Hammond,

Fiscal Assistant Secretary.

[FR Doc. 00–857 Filed 1–12–00; 8:45 am]

BILLING CODE 4810–39–M

DEPARTMENT OF TRANSPORTATION

Coast Guard

33 CFR Part 117

[CGD 08–99–069]

RIN 2115–AE47

Temporary Drawbridge Regulations; Mississippi River, Iowa and Illinois

AGENCY: Coast Guard, DOT.

ACTION: Temporary rule.

SUMMARY: The Coast Guard is temporarily changing the drawbridge operation regulation governing the Burlington Railroad Drawbridge, Mile 403.1, Upper Mississippi River. The drawbridge shall open on signal if at least six (6) hours advance notice is given from 8 a.m. on December 31, 1999, until 8 a.m. on March 1, 2000. This arrangement is necessary to perform annual maintenance and repair work on the bridge.

DATES: This temporary rule is effective from 8 a.m. on December 31, 1999, until 8 a.m. on March 1, 2000.

ADDRESSES: The public docket and all documents referred to in this notice will be available for inspection and copying at room 2.107f in the Robert A. Young Federal Building at Commander (obr), Eighth Coast Guard District, 1222 Spruce Street, St. Louis, MO 63101–2832, between 7 a.m. and 4 p.m., Monday through Friday, except Federal holidays.

FOR FURTHER INFORMATION CONTACT: Roger K. Wiebusch, Bridge Administrator; Commander (obr), Eighth Coast Guard District, Bridge Branch, 1222 Spruce Street, St. Louis, MO 63101–2832, telephone (314) 539–3900, extension 378.

SUPPLEMENTARY INFORMATION:

Regulatory History

On November 24, 1999, Burlington Northern Santa Fe requested a temporary change to the operation of the Burlington Railroad Drawbridge across the Upper Mississippi River, Mile 403.1 at Burlington, Iowa. The Railroad requested that the bridge be allowed to open for navigation between December 31, 1999 and March 1, 2000 upon a six (6) hour advance notice so that necessary maintenance and bridge repair activities can be performed. Advance notice may be given by calling Al Poole, (309) 345–6103 during work hours and Larry Moll, (309) 752–5244, after hours.

In accordance with 5 U.S.C. 533, a notice of proposed rulemaking has not been published and good cause exists for making this rule effective in less than 30 days from publication. Following normal rulemaking procedures would be impractical. Delaying implementation of the regulation will not benefit navigation and would result in unnecessary delays in repairing the bridge.

Background and Purpose

The Burlington Railroad Drawbridge has a vertical clearance of 21.5 feet above normal pool in the closed to navigation position. Navigation on the waterway consists of commercial tows and recreational watercraft. Presently the draw opens on signal for passage of river traffic. This temporary drawbridge operation amendment has been coordinated with the commercial waterway operators. No one objected to the proposed amendment. Winter conditions on the Upper Mississippi River coupled with the closure of Army Corps of Engineer's Lock No. 21 until March 1, 2000, will preclude any significant navigation demands for the drawspan openings. The Burlington Railroad Drawbridge is located downstream of Lock 18 and upstream of Lock 19. Performing maintenance on the bridge during the winter when no

vessels are impacted is preferred to bridge closures or advance notification requirements during the commercial navigation season.

Regulatory Evaluation

This temporary rule is not a significant regulatory action under section 3(f) of Executive Order 12866 and does not require an assessment of potential cost and benefits under section 6(a)(3) of that order. The Office of Management and Budget has not reviewed it under that order. It is not significant under the Regulatory Policies and Procedures of the Department of Transportation (DOT) (44 FR 11040, February 26, 1979). The Coast Guard expects the economic impact of this temporary rule to be so minimal that a full Regulatory Evaluation under paragraph 10e of the regulatory policies and procedures of DOT is unnecessary. This is because river traffic will be extremely limited by lock closures and ice during this period.

Unfunded Mandates Reform Act

The Unfunded Mandates Reform Act of 1995 (2 U.S.C. 1531–1538) governs the issuance of Federal regulations that require unfunded mandates. An unfunded mandate is a regulation that requires a State, local, or tribal government or the private sector to incur direct costs without the Federal Government's having first provided the funds to pay those costs. This rule would not impose an unfunded mandate.

Taking of Private Property

This rule would not effect a taking of private property or otherwise have taking implications under E.O. 12630, Governmental Actions and Interference with Constitutionally Protected Property Rights.

Civil Justice Reform

This rule meets applicable standards in sections 3(a) and 3(b)(2) of E.O. 12988, Civil Justice Reform, to minimize litigation, eliminate ambiguity, and reduce burden.

Protection of Children

We have analyzed this rule under E.O. 13045, Protection of Children from Environmental Health Risks and Safety Risks. This rule is not an economically significant rule and does not concern an environmental risk to health or risk to safety that may disproportionately affect children.

Small Entities

Under the Regulatory Flexibility Act, 5 U.S.C. 601 *et seq.*, the Coast Guard must consider whether this temporary rule will have a significant economic impact on a substantial number of small entities. ''Small entities'' may include (1) small businesses and not-for-profit organizations that are independently owned and operated and are not dominant in their fields and (2) governmental jurisdictions with populations of less than 50,000. Because it expects the impact of this action to be minimal, the Coast Guard certifies under 5 U.S.C. 605(b), that this action will not have economic impact on a substantial number of small entities.

Collection of Information

This temporary rule contains no collection-of-information requirements under the Paperwork Reduction Act (44 U.S.C. 3501 *et seq.*).

Federalism Assessment

The Coast Guard has analyzed this rule under the principles and criteria contained in Executive Order 12612, and it has been determined that this rule does not have sufficient federalism implications to warrant the preparation of a Federalism Agreement.

Environment Assessment

The Coast Guard considered the environmental impact of this temporary rule and concluded that this action is categorically excluded from further environmental documentation in accordance with Section 2.B.2, Figure 2–1 (32)(e) of the National Environmental Policy Act Implementing Procedures, COMDTINST M16475.1C. A Categorical Exclusion Determination is available for inspection or copying where indicated under **ADDRESSES**.

List of Subjects in 33 CFR Part 117

Bridges.

Temporary Regulations

In consideration of the foregoing, Part 117 of Title 33, Code of Federal Regulations, is amended as follows:

PART 117—DRAWBRIDGE OPERATION REGULATIONS

1. The authority citation for Part 117 continues to read as follows:

Authority: 33 U.S.C. Sec. 499; 49 CFR 1.46; 33 CFR 1.05–(g); § 117.255 also issued under the authority of Pub. L. 102–587, 106 Stat. 5039.

2. Effective 8 a.m. on December 31, 1999, through 8 a.m. on March 1, 2000, a temporary § 117.T410 is added to read as follows:

§ 117.T410 Upper Mississippi River.

Burlington Railroad Drawbridge, Mile 403.1, Upper Mississippi River. From 8 a.m. on December 31, 1999 through 8 a.m. on March 1, 2000, the drawspan shall open on signal if at least six (6) hours advance notification is given. Advance notice may be given by calling (309) 345–6103 during work hours and (309) 752–5244 after hours.

Dated: December 27, 1999.

K.J. Eldridge,

Captain, United States Coast Guard, Acting Commander, Eighth Coast Guard District.

[FR Doc. 00–760 Filed 1–12–00; 8:45 am]

BILLING CODE 4910–15–P

DEPARTMENT OF TRANSPORTATION Coast Guard

33 CFR Part 117

[CGD08–99–071]

RIN 2115–AE47

Drawbridge Operating Regulation; Mississippi River, Iowa and Illinois

AGENCY: Coast Guard, DOT.

ACTION: Temporary rule.

SUMMARY: The Commander, Eighth Coast Guard District is temporarily changing the regulation governing the Clinton Railroad Drawbridge, Mile 518.0, Upper Mississippi River. The drawbridge shall open on signal if at least 24 hours advance notice is given from 8 a.m. on December 29, 1999, until March 2, 2000. This arrangement is necessary to perform annual maintenance and repair on the bridge.

DATES: This temporary rule is effective from 8 a.m. on December 29, 1999, until 8 a.m. on March 2, 2000.

ADDRESSES: The public docket and all documents referred to in this notice will be available for inspection and copying at room 2.107f in the Robert A. Young Federal Building at Commander (obr), Eighth Coast Guard District, 1222 Spruce Street, St. Louis, MO 63101–2832, between 7 a.m. and 4 p.m., Monday through Friday, except Federal holidays.

FOR FURTHER INFORMATION CONTACT: Roger K. Wiebusch, Bridge Administrator; Commander (obr), Eighth Coast Guard District, Bridge Branch, 1222 Spruce Street, St. Louis, MO 63101–2832, telephone (314) 539–3900, extension 378.

SUPPLEMENTARY INFORMATION:

Regulatory History

On November 23, 1999, the Union Pacific Railroad Company requested a temporary change to the operation of the Clinton Railroad swing bridge across the Upper Mississippi River, Mile 518.0 at

Clinton, Iowa. Union Pacific Railroad Company requested that navigation temporarily provide twenty-four hours advance notice for bridge operation to facilitate required bridge maintenance during the winter months. Advance notice may be given by calling the Clinton Yardmaster's office at (319) 244–3204 anytime; 319–244–3269 weekdays between 7 a.m. and 3:30 p.m.; or page Mr. Darrell Lott and 800–443–7243, PIN#020227.

In accordance with 5 U.S.C. 533, a notice of proposed rulemaking has not been published and good cause exists for making this rule effective in less than 30 days from publication. Following normal rulemaking procedures would be impractical. Delaying implementation of the regulation will not benefit navigation and would result in unnecessary delays in repairing the bridge.

Background and Purpose

The Clinton Railroad Drawbridge has a vertical clearance of 18.7 feet above normal pool in the closed to navigation position. Navigation on the waterway consists primarily of commercial tows and recreational watercraft. Presently, the draw opens on signal for passage of river traffic. This temporary drawbridge operation amendment has been coordinated with the commercial waterway operators. No one objected to the proposed amendment. Winter conditions on the Upper Mississippi River coupled with the closure of Army Corps of Engineer's Lock No. 21 until March 1, 2000, will preclude any significant navigation demands for the drawspan openings. The Clinton Railroad Drawbridge, Mile 518.0 Upper Mississippi River, is located upstream from Lock 21. Performing maintenance on the bridge during the winter when no vessels are impacted is preferred to bridge closures or advance notification requirements during the commercial navigation season.

Regulatory Evaluation

This temporary rule is not a significant regulatory action under section 3(f) of Executive Order 12866 and does not require an assessment of potential cost and benefits under section 6(a)(3) of that order. The Office of Management and Budget has not reviewed it under that order. It is not significant under the Regulatory Policies and Procedures of the Department of Transportation (DOT) (44 FR 11040, February 26, 1979). The Coast Guard expects the economic impact of this temporary rule to be so minimal that a full Regulatory Evaluation under paragraph 10e of the regulatory policies and procedures of DOT is unnecessary. This is because river traffic will be extremely limited by lock closures and ice during this period.

Unfunded Mandates Reform Act

The Unfunded Mandates Reform Act of 1995 (2 U.S.C. 1531–1538) governs the issuance of Federal regulations that require unfunded mandates. An unfunded mandate is a regulation that requires a State, local, or tribal government or the private sector to incur direct costs without the Federal Government's having first provided the funds to pay those costs. This rule would not impose an unfunded mandate.

Taking of Private Property

This rule would not effect a taking of private property or otherwise have taking implications under E.O. 12630, Governmental Actions and Interference with Constitutionally Protected Property Rights.

Civil Justice Reform

This rule meets applicable standards in sections 3(a) and 3(b)(2) of E.O. 12988, Civil Justice Reform, to minimize litigation, eliminate ambiguity, and reduce burden.

Protection of Children

We have analyzed this rule under E.O. 13045, Protection of Children from Environmental Health Risks and Safety Risks. This rule is not an economically significant rule and does not concern an environmental risk to health or risk to safety that may disproportionately affect children.

Small Entities

Under the Regulatory Flexibility Act, 5 U.S.C. 601 *et seq.*, the Coast Guard must consider whether this temporary rule will have a significant economic impact on a substantial number of small entities. ''Small entities'' may include (1) small businesses and not-for-profit organizations that are independently owned and operated and are not dominant in their fields and (2) governmental jurisdictions with populations of less than 50,000. Because it expects the impact of this action to be minimal, the Coast Guard certifies under 5 U.S.C. 605(b), that this action will not have economic impact on a substantial number of small entities.

Collection of Information

This temporary rule contains no collection-of-information requirements under the Paperwork Reduction Act (44 U.S.C. 3501 *et seq.*).

Federalism Assessment

The Coast Guard has analyzed this rule under the principles and criteria contained in Executive Order 12612, and it has been determined that this rule does not have sufficient federalism implications to warrant the preparation of a Federalism Agreement.

Environment Assessment

The Coast Guard considered the environmental impact of this temporary rule and concluded that this action is categorically excluded from further environmental documentation in accordance with Section 2.B.2, Figure 2–1 (32)(e) of the National Environmental Policy Act Implementing Procedures, COMDTINST M16475.1C. A Categorical Exclusion Determination is available for inspection or copying where indicated under **ADDRESSES**.

List of Subjects in 33 CFR Part 117

Bridges.

For the reasons set out in the preamble, the Coast Guard is amending Part 117 of Title 33, Code of Federal Regulations, as follows:

PART 117—DRAWBRIDGE OPERATION REGULATIONS

1. The authority citation for Part 117 continues to read as follows:

Authority: 33 U.S.C. 499; 49 CFR 1.46; 33 CFR 1.05–1(g); section 117.255 also issued under the authority of Pub. L. 102–587, 106 Stat. 5039.

2. Effective 8 a.m. on December 29, 1999, through 8 a.m. on March 2, 2000, a new temporary § 117.T409 is added to read as follows:

§ 117.T409 Upper Mississippi River.

Clinton Railroad Drawbridge Mile 518.0 Upper Mississippi River. From 8 a.m. on December 29, 1999 through 8 a.m. on March 2, 2000, the drawspan requires twenty-four hours advance notice for bridge operation. Bridge opening requests must be made 24 hours in advance by calling the Clinton Yardmaster's office at (319) 244–3204 anytime; 319–244–3269 weekdays between 7 a.m. and 3:30 p.m.; or page Mr. Darrell Lott at 800–443–7243, PIN#020227.

Dated: December 27, 1999.

K.J. Eldridge,

Captain, United States Coast Guard, Acting Commander, Eighth Coast Guard District.

[FR Doc. 00–759 Filed 1–12–00; 8:45 am]

BILLING CODE 4910–15–P

DEPARTMENT OF TRANSPORTATION

Coast Guard

33 CFR Part 117

[CGD 08–99–077]

RIN 2115–AE47

Temporary Drawbridge Regulations; Mississippi River, Iowa and Illinois

AGENCY: Coast Guard, DOT.

ACTION: Temporary rule.

SUMMARY: The Coast Guard is temporarily adding a drawbridge operation regulation governing the Rock Island Railroad and Highway Drawbridge, Mile 482.9, Upper Mississippi River. The drawbridge will remain closed to navigation from 8 a.m. on December 30, 1999 until 8 a.m. March 1, 2000. This closure is necessary to perform annual maintenance and repair work on the bridge.

DATES: This temporary rule is effective from 8 a.m. on December 30, 1999 until 8 a.m. on March 1, 2000.

ADDRESSES: The public docket and all documents referred to in this rule will be available for inspection and copying at room 2.107f in the Robert A. Young Federal Building at Commander (obr), Eighth Coast Guard District, 1222 Spruce Street, St. Louis, MO 63101–2832, between 7 a.m. and 4 p.m., Monday through Friday, except Federal holidays.

FOR FURTHER INFORMATION CONTACT: Roger K. Wiebusch, Bridge Administrator; Commander (obr), Eighth Coast Guard District, Bridge Branch, 1222 Spruce Street, St. Louis, MO 63101–2832, telephone (314) 539–3900, extension 378.

SUPPLEMENTARY INFORMATION:

Regulatory History

On November 17, 1999, Department of Army, Rock Island Arsenal, requested a temporary change to the operation of the Rock Island Railroad and Highway Drawbridge across the Upper Mississippi River, Mile 482.9 at Rock Island, Illinois. The Department of Army requested that the bridge be temporarily closed to navigation in order to perform necessary maintenance and bridge repair activities.

In accordance with 5 U.S.C. 533, a notice of proposed rulemaking has not been published and good cause exists for making this rule effective in less than 30 days from publication. Following normal rulemaking procedures would be impractical. Delaying implementation of the regulation will not benefit navigation and would result in unnecessary delays in repairing the bridge.

Background and Purpose

The Rock Island Railroad and Highway Drawbridge has a vertical clearance of 23.8 feet above normal pool in the closed to navigation position. Navigation on the waterway consists of commercial tows and recreational watercraft. Presently the draw opens on signal for passage of river traffic. This temporary drawbridge operation amendment has been coordinated with the commercial waterway operators. No one objected to the proposed amendment. Winter conditions on the Upper Mississippi River coupled with the closure of Army Corps of Engineer's Lock No. 21 until March 1, 2000, will preclude any significant navigation demands for the drawspan openings. The Rock Island Railroad & Highway Drawbridge is located upstream of Lock 21. Performing maintenance on the bridge during the winter when no vessels are impacted is preferred to bridge closures or advance notification requirements during the commercial navigation season.

Regulatory Evaluation

This temporary rule is not a significant regulatory action under section 3(f) of Executive Order 12866 and does not require an assessment of potential cost and benefits under section 6(a)(3) of that order. The Office of Management and Budget has not reviewed it under that order. It is not significant under the Regulatory Policies and Procedures of the Department of Transportation (DOT) (44 FR 11040, February 26, 1979). The Coast Guard expects the economic impact of this temporary rule to be so minimal that a full Regulatory Evaluation under paragraph 10e of the regulatory policies and procedures of DOT is unnecessary. This is because river traffic will be extremely limited by lock closures and ice during this period.

Unfunded Mandates Reform Act

The Unfunded Mandates Reform Act of 1995 (2 U.S.C. 1531–1538) governs the issuance of Federal regulations that require unfunded mandates. An unfunded mandate is a regulation that requires a State, local, or tribal government or the private sector to incur direct costs without the Federal Government's having first provided the funds to pay those costs. This rule would not impose an unfunded mandate.

Taking of Private Property

This rule would not effect a taking of private property or otherwise have taking implications under E.O. 12630, Governmental Actions and Interference with Constitutionally Protected Property Rights.

Civil Justice Reform

This rule meets applicable standards in sections 3(a) and 3(b)(2) of E.O. 12988, Civil Justice Reform, to minimize litigation, eliminate ambiguity, and reduce burden.

Protection of Children

We have analyzed this rule under E.O. 13045, Protection of Children from Environmental Health Risks and Safety Risks. This rule is not an economically significant rule and does not concern an environmental risk to health or risk to safety that may disproportionately affect children.

Small Entities

Under the Regulatory Flexibility Act, 5 U.S.C. 601 *et seq.*, the Coast Guard must consider whether this temporary rule will have a significant economic impact on a substantial number of small entities. ''Small entities'' may include (1) small businesses and not-for-profit organizations that are independently owned and operated and are not dominant in their fields and (2) governmental jurisdictions with populations of less than 50,000. Because it expects the impact of this action to be minimal, the Coast Guard certifies under 5 U.S.C. 605(b), that this action will not have economic impact on a substantial number of small entities.

Collection of Information

This temporary rule contains no collection-of-information requirements under the Paperwork Reduction Act (44 U.S.C. 3501 *et seq.*).

Federalism Assessment

The Coast Guard has analyzed this rule under the principles and criteria contained in Executive Order 12612, and it has been determined that this rule does not have sufficient federalism implications to warrant the preparation of a Federalism Agreement.

Environment Assessment

The Coast Guard considered the environmental impact of this temporary rule and concluded that this action is categorically excluded from further environmental documentation in accordance with Section 2.B.2, Figure 2–1 (32)(e) of the National Environmental Policy Act Implementing Procedures, COMDTINST M16475.1C. A

Categorical Exclusion Determination is available for inspection or copying where indicated under **ADDRESSES**.

List of Subjects in 33 CFR Part 117

Bridges.

Temporary Regulation

In consideration of the foregoing, Part 117 of Title 33, Code of Federal Regulations, is amended as follows:

PART 117—DRAWBRIDGE OPERATION REGULATIONS

1. The authority citation for Part 117 continues to read as follows:

Authority: 33 U.S.C. Sec. 499; 49 CFR 1.46; 33 CFR 1.05–1(g); section 117.225 also issued under the authority of Pub. L. 102–587, 106 Stat. 5039.

2. From 8 a.m. on December 30, 1999, through 8 a.m. on March 1, 2000, a new § 117.T408 is added to read as follows:

§ 117.T408 Upper Mississippi River.

Rock Island Railroad & Highway Drawbridge, Mile 482.9, Upper Mississippi River. From 8 a.m. on December 30, 1999, through 8 a.m. on March 1, 2000, the drawspan may be maintained in the closed to navigation position and need not open for vessel traffic.

Dated: December 27, 1999.

K.J. Eldridge,

Captain, United States Coast Guard, Acting Commander, Eighth Coast Guard District.

[FR Doc. 00–758 Filed 1–12–00; 8:45 am]

BILLING CODE 4910–15–P

ENVIRONMENTAL PROTECTION AGENCY

40 CFR Part 52

[FRL–6522–9]

RIN: 2060–AH88

Final Rule To Extend the Stay of Action on Section 126 Petitions for Purposes of Reducing Interstate Ozone Transport

AGENCY: Environmental Protection Agency (EPA).

ACTION: Final rule.

SUMMARY: Today, EPA is taking final action to extend the temporary stay of the effective date of the May 25, 1999 final rule (64 FR 28250) regarding petitions filed under section 126 of the Clean Air Act (CAA) until February 17, 2000. This action to extend the temporary stay will prevent the section 126 findings from being triggered automatically under the mechanism EPA established in the May 25, 1999 rule. The EPA revised the May 25, 1999 rule in a final rule signed on December 17, 1999. Today's action extends the stay of the May 25, 1999 rule until the revised rule becomes effective on February 17, 2000.

EFFECTIVE DATE: This final rule is effective January 10, 2000.

ADDRESSES: Documents relevant to this action are available for inspection at the Air and Radiation Docket and Information Center (6102), Attention: Docket No. A–97–43, U.S. Environmental Protection Agency, 401 M Street SW, room M–1500, Washington, DC 20460, telephone (202) 260–7548 between 8:00 a.m. and 5:30 p.m., Monday though Friday, excluding legal holidays. A reasonable fee may be charged for copying.

FOR FURTHER INFORMATION CONTACT: Questions concerning today's action should be addressed to Carla Oldham, Office of Air Quality Planning and Standards, Air Quality Strategies and Standards Division, MD–15, Research Triangle Park, NC, 27711, telephone (919) 541–3347, e-mail at oldham.carla@epa.gov.

SUPPLEMENTARY INFORMATION:

Availability of Related Information

The official record for the section 126 rulemaking, as well as the public version of the record, has been established under docket number A–97–43 (including comments and data submitted electronically as described below). The public version of this record, including printed, paper versions of electronic comments, which does not include any information claimed as confidential business information, is available for inspection from 8:00 a.m. to 5:30 p.m., Monday through Friday, excluding legal holidays. The official rulemaking record is located at the address in **ADDRESSES** at the beginning of this document. In addition, the **Federal Register** rulemakings and associated documents are located on EPA's website at http://www.epa.gov/ttn/rto/126.

I. Background

A. Temporary Stay of May 25, 1999 Final Rule on the Section 126 Petitions

On May 25, 1999 (64 FR 28250), EPA made final determinations that portions of the petitions filed by eight Northeastern States under section 126 of the CAA are technically meritorious. The petitions sought to mitigate what they described as significant transport of one of the main precursors of ground-level ozone, nitrogen oxides (NO_X), across State boundaries. Each petition specifically requested that EPA make a finding that certain stationary sources emit NO_X in violation of the CAA's prohibition on emissions that significantly contribute to nonattainment problems in the petitioning State.

On June 24, 1999 (64 FR 33956), EPA issued an interim final rule to temporarily stay the effectiveness of the May 25, 1999 final rule until November 30, 1999. The purpose of the interim final rule was to provide EPA time to conduct notice-and-comment rulemaking to address issues raised by two rulings of the U.S. Court of Appeals for the District of Columbia Circuit (D.C. Circuit). In one ruling in *American Trucking Assn., Inc.,* v. *EPA,* 175 F.3d 1027 (D.C. Cir. 1999), the court remanded the 8-hour national ambient air quality standard (NAAQS) for ozone, which formed part of the underlying technical basis for certain of EPA's determinations under section 126. On October 29, 1999, the D.C. Circuit granted in part EPA's Petition for Rehearing and Rehearing En Banc (filed on June 28, 1999) in *American Trucking,* and modified portions of its opinion addressing EPA's ability to implement the 8-hour standard. See *American Trucking,* 1999 WL 979463 (Oct. 29, 1999). The court denied the remainder of EPA's rehearing petition. *Id.* The EPA continues to evaluate the effect of *American Trucking,* as modified by the D.C. Circuit's October 29, 1999 opinion and order. The EPA expects, however, that the status of the 8-hour standard will be uncertain for some time to come. In a separate action, on May 25, 1999, the D.C. Circuit granted a motion to stay the State implementation plan (SIP) submission deadlines established in a related EPA action, the NO_X SIP call (October 27, 1998, 63 FR 57356).

In the interim final rule staying the May 25, 1999 rule, EPA explained why it would be contrary to the public interest for the May 25, 1999 rule to remain in effect while EPA conducted rulemaking to respond to issues raised by the court rulings. The reader should refer to the June 24, 1999 interim final rule (64 FR 33956) and May 25, 1999 final rule (64 FR 28250) for further details and background information. On November 30, 1999, EPA extended the temporary stay until January 10, 2000 because EPA had not yet finalized the revisions to the May 25, 1999 final rule (64 FR 67781; December 3, 1999). In that action to extend the stay, EPA indicated that the stay should remain in place until the effective date of the revised rule, which would be 30 days after the date the revised rule was published in

the **Federal Register**. Thus, EPA noted that it would further extend the stay for a few additional weeks, if necessary.

B. Revisions to the May 25, 1999 Final Rule

On June 24, 1999 (64 FR 33962), EPA proposed to revise two aspects of the May 25, 1999 final rule. The EPA proposed to stay indefinitely the affirmative technical determinations based on the 8-hour standard pending further developments in the NAAQS litigation. The EPA also proposed to remove the trigger mechanism for making section 126 findings that was based on the NO_X SIP call deadlines and to instead make the findings under the 1-hour standard in a final rule to be issued in November 1999. In the proposal, EPA indicated that it expected to promulgate the final rule based on the proposal by November 30, 1999, when the interim final rule would expire. To address the possibility that there could be a delay in amending the May 25, 1999 final rule, EPA requested comments in the June 24, 1999 proposal on extending the temporary stay beyond November 30 until EPA completed the final rule. The EPA noted that if additional time were needed, it would likely not be more than 2 or 3 months. Two commenters agreed that it would be appropriate for EPA to further extend the stay under such circumstances, while one commenter expressed concern that an extension of time would increase the likelihood of delay.

In a rule signed on December 17, 1999, EPA finalized the revisions to the May 25, 1999 final rule. The revised rule removes the trigger mechanism and instead directly makes the section 126 findings based on the 1-hour standard. The revised rule also indefinitely stays the portion of the May 25, 1999 rule that is based on the 8-hour standard. In addition, the revised rule includes a Federal NO_X Budget Trading Program as the control remedy for sources subject to section 126 findings under the 1-hour standard. The revised rule will be published in the **Federal Register** on January 18, 2000, and hence will become effective 30 days later on February 17, 2000.

II. Today's Final Rule To Extend the Temporary Stay

Today's final rule, which is effective January 10, 2000, temporarily extends the stay of the May 25, 1999 rule until February 17, 2000. This action will prevent the section 126 findings from being automatically triggered under the mechanism in the May 25, 1999 rule. The EPA signed the final rule to modify the May 25, 1999 rule on December 17, 1999. However, the stay needs to apply until the effective date of the final section 126 rule. As the revised final section 126 rule will not become effective until February 17, 2000, EPA is extending the stay until that date.

This extension of the stay does not affect the compliance date of May 1, 2003 for emissions reductions under the section 126 rule. Also, the affected entities have had notice of the requirements under section 126 as of the date that EPA signed and released the final section 126 rule to the public. The rule was signed on December 17, 1999 and immediately placed on EPA's website listed above.

III. Rulemaking Procedures

As noted above, this rule will be effective on January 10, 2000. Providing for a delay of the effective date of this final rule (either 30 or 60 days after publication) would be unnecessary and contrary to the public interest. Because the final rule relieves a regulatory burden that would otherwise be imposed, there is no need to provide time for education and compliance with a new regulatory requirement. Moreover, the current stay expires January 10, 2000. Allowing the stay to lapse before the final rule becomes effective would allow the section 126 findings to be automatically triggered for sources potentially subject to the section 126 findings in all States that had not submitted SIPs in compliance with the NO_X SIP call and for which EPA had not proposed approval of such SIPs. As explained in the June 24, 1999 proposal (64 FR 33962), EPA believes it is no longer appropriate to link the section 126 findings with compliance with the NO_X SIP call, in light of the judicial stay of the compliance dates under the NO_X SIP call. Thus, allowing the findings to be triggered automatically would be contrary to the purposes of the ongoing section 126 rulemaking and contrary to the public interest. In addition, under the automatic trigger mechanism, findings would be made based on both the 1-hour and 8-hour standards. The EPA believes it is appropriate in light of the court's decision in *American Trucking Ass'n* v. *EPA* to stay the findings based on the 8-hour standard at this time. Given the lack of burden upon affected parties and the need to make this final rule effective on January 10, 2000, EPA finds good cause for expediting the effective date of this portion of today's rule. The EPA believes that this is consistent with 5 U.S.C. 553(d)(1) and (3).

IV. Administrative Requirements

A. Executive Order 12866: Regulatory Planning and Review

Under Executive Order 12866 (58 FR 51735, October 4, 1993), the Agency must determine whether a regulatory action is ''significant'' and therefore subject to Office of Management and Budget (OMB) review and the requirements of the Executive Order. The Order defines ''significant regulatory action'' as one that is likely to result in a rule that may:

(1) Have an annual effect on the economy of $100 million or more or adversely affect in a material way the economy, a sector of the economy, productivity, competition, jobs, the environment, public health or safety, or State, local, or tribal governments or communities;

(2) Create a serious inconsistency or otherwise interfere with an action taken or planned by another agency;

(3) Materially alter the budgetary impact of entitlements, grants, user fees, or loan programs or the rights and obligations of recipients thereof; or

(4) Raise novel legal or policy issues arising out of legal mandates, the President's priorities, or the principles set forth in the Executive Order.

The EPA believes that this final rule is not a ''significant regulatory action'' because it relieves, rather than imposes, regulatory requirements, and raises no novel legal or policy issues.

B. Regulatory Flexibility

The EPA has determined that it is not necessary to prepare a regulatory flexibility analysis in connection with this final rule. The EPA has also determined that this rule will not have a significant economic impact on a substantial number of small entities. Small entities include small businesses, small organizations, and small governmental jurisdictions. Today's action does not create any new requirements. Thus, this rule will not have a significant economic impact on a substantial number of small entities.

C. Unfunded Mandates Reform Act

Title II of the Unfunded Mandates Reform Act of 1995 (UMRA), Public Law 104–4, establishes requirements for Federal agencies to assess the effects of their regulatory actions on State, local, and tribal governments and the private sector. Under section 202 of the UMRA, 2 U.S.C. 1532, EPA generally must prepare a written statement, including a cost-benefit analysis, for any proposed or final rule that ''includes any Federal mandate that may result in the expenditure by State, local, and tribal

governments, in the aggregate, or by the private sector, of $100,000,000 or more * * * in any one year.'' A ''Federal mandate'' is defined to include a ''Federal intergovernmental mandate'' and a ''Federal private sector mandate'' (2 U.S.C. 658(6)). A ''Federal intergovernmental mandate,'' in turn, is defined to include a regulation that ''would impose an enforceable duty upon State, local, or tribal governments (2 U.S.C. 658(5)(A)(i)), except for, among other things, a duty that is ''a condition of Federal assistance (2 U.S.C. 658(5)(A)(i)(I)). A ''Federal private sector mandate'' includes a regulation that ''would impose an enforceable duty upon the private sector,'' with certain exceptions (2 U.S.C. 658(7)(A)).

The EPA has determined that this action does not include a Federal mandate that may result in estimated costs of $100 million or more to either State, local, or tribal governments in the aggregate, or to the private sector. This Federal action imposes no new requirements. Accordingly, no additional costs to State, local, or tribal governments, or to the private sector, result from this action.

D. Paperwork Reduction Act

This final rule does not impose any new information collection requirements. Therefore, an Information Collection Request document is not required.

E. Executive Order 13045: Protection of Children From Environmental Health Risks and Safety Risks

Executive Order 13045 applies to any rule that (1) is determined to be ''economically significant'' as defined under Executive Order 12866, and (2) concerns an environmental health or safety risk that EPA has reason to believe may have a disproportionate effect on children. If the regulatory action meets both criteria, the Agency must evaluate the environmental health or safety effects of the rule on children, and explain why the regulation is preferable to other potentially effective and reasonably feasible alternatives considered by the Agency.

This rule is not subject to Executive Order 13045 because it is not ''economically significant'' as defined under Executive Order 12866 and because the Agency does not have reason to believe the environmental health risks or safety risks addressed by this action present a disproportionate risk to children.

F. Executive Order 12898: Environmental Justice

Executive Order 12898 requires that each Federal agency make achieving environmental justice part of its mission by identifying and addressing, as appropriate, disproportionately high and adverse human health or environmental effects of its programs, policies, and activities on minorities and low-income populations. This Federal action imposes no new requirements and will not delay achievement of emissions reductions under existing requirements. Accordingly, no disproportionately high or adverse effects on minorities or low-income populations will result from this action.

G. Executive Order 13132: Federalism

Executive Order 13132, entitled ''Federalism'' (64 FR 43255, August 10, 1999), requires EPA to develop an accountable process to ensure ''meaningful and timely input by State and local officials in the development of regulatory policies that have federalism implications.'' ''Policies that have federalism implications'' is defined in the Executive Order to include regulations that have ''substantial direct effects on the States, on the relationship between the national government and the States, or on the distribution of power and responsibilities among the various levels of government.''

Under section 6 of Executive Order 13132, EPA may not issue a regulation that has federalism implications, that imposes substantial direct compliance costs, and that is not required by statute, unless the Federal government provides the funds necessary to pay the direct compliance costs incurred by State and local governments, or EPA consults with State and local officials early in the process of developing the proposed regulation. The EPA also may not issue a regulation that has federalism implications and that preempts State law, unless the Agency consults with State and local officials early in the process of developing the proposed regulation.

This final rule does not have federalism implications. It will not have substantial direct effects on the States, on the relationship between the national government and the States, or on the distribution of power and responsibilities among the various levels of government, as specified in Executive Order 13132. Today's rule does not create a mandate on State, local or Tribal governments. The rule does not impose any enforceable duties on these entities. Thus, the requirements of section 6 of the Executive Order do not apply to this rule.

H. Executive Order 13084: Consultation and Coordination With Indian Tribal Governments

Under Executive Order 13084, EPA may not issue a regulation that is not required by statute, that significantly or uniquely affects the communities of Indian tribal governments, and that imposes substantial direct compliance costs on those communities, unless the Federal government provides the funds necessary to pay the direct compliance costs incurred by the tribal governments, or EPA consults with those governments. If EPA complies by consulting, Executive Order 13084 requires EPA to provide to the Office of Management and Budget, in a separately identified section of the preamble to the rule, a description of the extent of EPA's prior consultation with representatives of affected tribal governments, a summary of the nature of their concerns, and a statement supporting the need to issue the regulation. In addition, Executive Order 13084 requires EPA to develop an effective process permitting elected officials and other representatives of Indian tribal governments ''to provide meaningful and timely input in the development of regulatory policies on matters that significantly or uniquely affect their communities.''

Today's rule does not significantly or uniquely affect the communities of Indian tribal governments. This action does not impose any requirements that affect Indian Tribes. Accordingly, the requirements of section 3(b) of E.O. 13084 do not apply to this rule.

I. National Technology Transfer and Advancement Act

Section 12(d) of the National Technology Transfer and Advancement Act of 1995 (NTTAA), Public Law 104–113, directs EPA to use voluntary consensus standards in its regulatory activities unless to do so would be inconsistent with applicable law or otherwise impractical. Voluntary consensus standards are technical standards (e.g., materials specifications, test methods, sampling procedures, and business practices) that are developed or adopted by voluntary consensus standards bodies. The NTTAA directs EPA to provide Congress, through OMB, explanations when the Agency decides not to use available and applicable voluntary consensus standards.

This final rule does not involve the promulgation of any new technical standards. Therefore, NTTAA

requirements are not applicable to today's rule.

J. Judicial Review

Section 307(b)(1) of the CAA indicates which Federal Courts of Appeal have venue for petitions of review of final actions by EPA. This section provides, in part, that petitions for review must be filed in the Court of Appeals for the District of Columbia Circuit (i) when the agency action consists of ''nationally applicable regulations promulgated, or final actions taken, by the Administrator,'' or (ii) when such action is locally or regionally applicable, if ''such action is based on a determination of nationwide scope or effect and if in taking such action the Administrator finds and publishes that such action is based on such a determination.''

For the reasons discussed in the May 25, 1999 final rule, the Administrator determined that final action regarding the section 126 petitions is of nationwide scope and effect for purposes of section 307(b)(1). Thus, any petitions for review of final actions regarding the section 126 rulemaking must be filed in the Court of Appeals for the District of Columbia Circuit within 60 days from the date final action is published in the **Federal Register**.

K. Congressional Review Act

The Congressional Review Act (CRA), 5 U.S.C. 801 *et seq.*, as added by the Small Business Regulatory Enforcement Fairness Act of 1996, generally provides that before a rule may take effect, the agency promulgating the rule must submit a rule report, which includes a copy of the rule, to each House of the Congress and to the Comptroller General of the United States. The EPA will submit a report containing this rule and other required information to the U.S. Senate, the U.S. House of Representatives, and the Comptroller General of the United States prior to this rule going into effect. This action is not a ''major rule'' as defined by 5 U.S.C. 804(2).

List of Subjects in 40 CFR Part 52

Environmental protection, Air pollution control, Emissions trading, Nitrogen oxides, Ozone, Ozone transport, Reporting and recordkeeping requirements.

Dated: January 7, 2000.

Carol M. Browner,

Administrator.

For the reasons set forth in the preamble, part 52 of chapter 1 of title 40 of the Code of Federal Regulations is amended as follows:

PART 52—APPROVAL AND PROMULGATION OF IMPLEMENTATION PLANS

1. The authority citation for part 52 continues to read as follows:

Authority: 42 U.S.C. 7401 *et seq.*

Subpart A—General Provisions

2. Section 52.34 is amended by revising paragraph (l) to read as follows:

§ 52.34 Action on petitions submitted under section 126 relating to emissions of nitrogen oxides.

* * * * *

(1) *Temporary stay of rules.* Notwithstanding any other provisions of this subpart, the effectiveness of this section is stayed from July 26, 1999 until February 17, 2000.

[FR Doc. 00–849 Filed 1–10–00; 4:02 pm]

BILLING CODE 6560–50–P

ENVIRONMENTAL PROTECTION AGENCY

40 CFR Part 52

[WV026–6012; FRL–6505–1]

Approval and Promulgation of Air Quality Implementation Plans; Approval Under Section 112(l) of the Clean Air Act; West Virginia; Permits for Construction, Modification, Relocation and Operation of Stationary Sources of Air Pollutants

AGENCY: Environmental Protection Agency (EPA).

ACTION: Final rule.

SUMMARY: EPA is approving in part, and disapproving in part, a State Implementation Plan (SIP) revision submitted by the State of West Virginia. This SIP revision changes portions of West Virginia's minor new source review permit program and establishes new provisions for permitting existing stationary sources. Specifically, this action approves in part, and disapproves in part, changes to West Virginia's minor new source review permit program; and approves West Virginia's minor new source review and existing stationary source operating permit program as meeting federal criteria for permit programs that can limit a source's potential to emit criteria pollutants and hazardous air pollutants (HAPs).

EFFECTIVE DATE: This final rule is effective on February 14, 2000.

ADDRESSES: Copies of the documents relevant to this action are available for public inspection during normal business hours at the Air Protection Division, U.S. Environmental Protection Agency, Region III, 1650 Arch Street, Philadelphia, Pennsylvania 19103; the Air and Radiation Docket and Information Center, U.S. Environmental Protection Agency, 401 M Street, SW, Washington, DC 20460; and West Virginia Department of Environmental Protection, Office of Air Quality, 1558 Washington Street, East, Charleston, West Virginia, 2531.

FOR FURTHER INFORMATION CONTACT: Jennifer M. Abramson, (215) 814–2066 or by e-mail at Abramson.Jennifer@epa.gov.

SUPPLEMENTARY INFORMATION:

I. Background

On February 3, 1998 (63 FR 5484), EPA published a notice of proposed rulemaking (NPR) regarding West Virginia's minor new source review and existing stationary source operating permit program. The NPR proposed approval in part, and disapproval in part, of changes to West Virginia's minor new source review permit program. Specifically, the NPR proposed to disapprove a new exemption from minor new source review for sources that have been issued permits under the State's federally approved major source operating permit program (developed pursuant to Title V of the Clean Air Act) as such exemption does not comport with the federal requirements for scope of 40 CFR 51.160. The NPR also proposed to disapprove new provisions governing the issuance of temporary construction or modification permits with only a fifteen day public comment period as such provisions do not satisfy the federal requirements for public participation of 40 CFR 51.161(b). The NPR proposed to approve all other provisions of West Virginia's minor new source review program under section 110 of the Clean Air Act (the Act) as a revision to the West Virginia SIP. The formal SIP revision, submitted by West Virginia on August 26, 1994 applies statewide.

The NPR also proposed to approve West Virginia's minor new source review and existing stationary source operating permit program under section 110 of the Act as meeting the criteria set forth in a June 28, 1989 **Federal Register** document (54 FR 27274) for state permit programs that can limit a source's potential to emit criteria pollutants. The NPR also proposed to approve West Virginia's minor new source review and stationary existing source operating permit program under section 112(l) of the Act as meeting the statutory criteria

for state permit programs that can limit a source's potential to emissions HAPs.

Other specific requirements of West Virginia's SIP submittal and the rationale for EPA's proposed action are explained in the NPR and will not be restated here.

II. Public Comments Received and EPA's Responses

EPA received comments on the NPR from the West Virginia Office of Air Quality (WVOAQ) and from the National Environmental Development Association's Clean Air Regulatory Project (NEDA/CARP), an industry coalition. These comments and EPA's responses are discussed below. All comments are contained in the docket at the **ADDRESSES** section above.

Comment: West Virginia's minor new source review provisions authorize discretionary issuance by the WVOAQ Chief of temporary permits for experimental production test runs under an expedited review and public participation process (a fifteen (15) day public comment period). WVOAQ believes that such a fast-track process may be appropriate where a company's vital business interests warrant such an approval process and where only small emissions increases or very small emissions of new substances for limited periods of time are involved. WVOAQ recognizes, however, that some clear, restrictive boundaries and safeguards need to be adhered to in establishing eligibility and conditions for such permits and intends to set forth such boundaries and safeguards via written policy or interpretive rule at some point in the near future.

EPA Response: EPA agrees that a 30-day public comment period for some minor new source review permitting actions may be impracticable and/or unnecessarily burdensome.[1] However, as discussed in the NPR, limitations on the full public participation requirements of 40 CFR 51.161 should be applied consistent with the environmental significance of the activity. WVOAQ's plan to define restrictive boundaries and safeguards so that only less environmentally significant changes are eligible for fast-track processing is one way to link permit process levels with environmental significance. However, such criteria must be submitted and approved as a revision to the West Virginia SIP before the fast-track procedure can be recognized as an enforceable part of West Virginia's SIP approved minor new source review program. The WVOAQ has not submitted any such criteria to EPA for consideration to date. Without a correlation to the environmental significance of the activity, EPA cannot consider the minimum public process afforded, fifteen (15) days, to be adequate in all instances.

Comment: NEDA/CARP commented that it is inappropriate and legally objectionable for EPA to take action on any SIP revision or Clean Air Act section 112(l) submission on the basis that limits on a source's potential to emit (PTE) must be federally enforceable. NEDA/CARP commented that the United States Court of Appeals for the District of Columbia Circuit vacated the requirement of federal enforceability as part of the PTE definition for both the new source review rules and the federal operating permit rules, 40 CFR parts 51, 52, and 70. *See Chemical Manufacturers Association* v. *EPA,* No. 89–1514 (Sept 15, 1995) (''*CMA*'') and *Clean Air Implementation Project, et. al* v. *Browner,* Civ. No. 92–1303 (June 28, 1996) (''*CAIP*''). While the definition was not vacated as it pertains to sources of hazardous air pollutants (40 CFR 63.2), it nonetheless was remanded to the Environmental Protection Agency for further rulemaking consistent with the court's directives. *See National Mining Association, et al.* v. *EPA,* 59 F.3d 1351 (D.C. Cir. 1995). As of this date, EPA has not proposed further rulemaking on the PTE definition for any Clean Air Act programs. NEDA/CARP also believes that reliance on EPA's June 28, 1989 guidance (54 FR 27274) is inappropriate after the D.C. Circuit decisions cited above. NEDA/CARP also commented that it is not clear whether EPA's proposed approval of West Virginia's submission under section 112(l) of the Act is part of the SIP action. NEDA/CARP commented that such an action would be inappropriate.

EPA response: EPA need not interpret the definition of ''potential to emit'' as requiring federal enforceability in order to approve West Virginia's minor new source review and existing stationary source operating permit program under sections 110 and 112(l) of the Act. EPA recognizes that there may be instances where PTE limits need not be federally enforceable under federal new source review and federal operating permit rules in light of the court decisions cited above. Moreover, although the *NMA* decision did not vacate the federal enforceability requirement of the PTE definition under part 63, even prior to *NMA,* EPA had indicated in guidance that certain state-enforceable PTE limits on HAPs may be recognized.[2] Nevertheless, EPA policy encourages States to use federally enforceable mechanisms, such as SIP-approved minor NSR programs, federally enforceable state operating permit programs (FESOPs) meeting the requirements of the June 28, 1989 guidance (54 FR 27274), and programs approved under section 112(l) for the purpose of establishing PTE limits.[3] Accordingly, West Virginia requested EPA approval of its minor new source review and existing stationary source operating permit program under sections 110 and 112 of the Act in order to be able to establish federally enforceable limits on a source's potential to emit criteria pollutants and HAPs.[4] For the reasons discussed in the NPR, EPA has found that West Virginia's program meets federal requirements and is now making such approvals.

Until EPA promulgates rules establishing otherwise, states may be able to establish permit programs or other mechanisms that limit potential to emit and thereby avoid applicability of certain requirements even if such limits are not federally enforceable, if those limits are shown to be effective. *See NMA,* 59 F.3d at 1363. Given the uncertainty of the final outcome of the requirement for federal enforceability, however, EPA does not recommend that states postpone submitting state permit programs for section 110 or 112(l) approval, or withdraw programs previously approved under such authorities. Sources with federally enforceable limits on potential emissions will be less likely to have to apply for revised permits or be subject to major source requirements should the requirement for federal enforceability be reinstated or the section 112 transition policy be revoked.

Moreover, it is important to recognize that West Virginia's regulated

[1] In the past, EPA has explained that section 51.160(e) allows state programs to vary procedures for, and timing of, public review in light of the environmental significance of the activity. See 60 FR 45564 (August 31, 1995).

[2] *See* Memorandum from John Seitz re Options for Limiting the Potential to Emit (PTE) of a Stationary Source under section 112 and Title V of the Clean Air Act (January 25, 1995); Memorandum from John Seitz re Release of Interim Policy on Federal Enforceability of Limitations on Potential to Emit (January 22, 1996); Memorandum from John Seitz re Second Extension of January 25, 1995 Potential to Emit Transition Policy and Clarification of Interim Policy (July 10, 1998).

[3] *See* Memorandum from John Seitz re Release of Interim Policy on Federal Enforceability of Limitations on Potential to Emit (January 22, 1996).

[4] West Virginia already had a minor new source review permitting program approved into its SIP. While permits issued pursuant to such program are federally enforceable, they are not specifically recognized as being federally enforceable for purposes of limiting a source's potential to emit.

community may benefit from being able to take limits on potential to emit that are federally enforceable. Currently, West Virginia's SIP-approved major non-attainment new source review program requires that limitations on potential to emit be federally enforceable. Approval of West Virginia's minor new source review and existing stationary source operating permit program into the SIP under 110 will allow sources to continue to rely on minor new source review permits to ''net out'' of major nonattainment new source review requirements.

With respect to NEDA/CARP's comment that it would be inappropriate for EPA to approve West Virginia's 112(l) program into the SIP, EPA wishes to make clear that its approval of West Virginia's submission under section 112(l) of the Act is separate from EPA's concurrent approval of the submission under section 110 of the Act as a SIP revision. The Agency is not approving the 112(l) program into the SIP.

III. Final Action

EPA is approving in part, and disapproving in part, changes to West Virginia's minor new source review program as a revision to the West Virginia SIP under section 110 of the Act. EPA is disapproving West Virginia's exemption of sources with Title V permits from minor new source review. EPA is also disapproving West Virginia's temporary permitting procedure. Such provisions do not comport with federal requirements for state minor new source review programs. At the same time, EPA is approving all other portions of West Virginia's minor new source review program as a revision to the West Virginia SIP. This action approves and makes federally enforceable many of the updates and improvements from the SIP approved version of West Virginia's minor new source review program, and at the same time prevents serious relaxations related to the program's scope and public participation requirements.

EPA is also approving West Virginia's minor new source review and existing stationary source operating permit program under sections 110 and 112(l) as meeting federal requirements for limiting a source's potential to emit criteria pollutants and HAPs. Approval under sections 110 and 112(l) of the Clean Air Act will recognize West Virginia's minor new source review and existing stationary source operating permit program as capable of establishing federally enforceable limitations on criteria pollutants and hazardous air pollutants, respectively. Such approval will confer federal enforceability status to PTE limitations in permits issued pursuant to West Virginia's minor new source review and existing stationary source operating permit program which meet applicable June 28, 1989 and section 112(l) criteria, including permits which have been issued prior to EPA's final action.

Accordingly, EPA is revising 40 CFR 52.2520 (Identification of plan) to reflect EPA's approval action. At the same time, EPA is revising 40 CFR 52.2522 (Approval status) to announce EPA's disapproval of the provisions which exempt sources with Title V permits from minor new source review and which govern the issuance of temporary construction and modification permits as revisions to the West Virginia SIP.

IV. Administrative Requirements

A. Executive Order 12866

The Office of Management and Budget (OMB) has exempted this regulatory action from review under Executive Order 12866, entitled ''Regulatory Planning and Review.''

B. Executive Order 13132

Federalism (64 FR 43255, August 10, 1999) revokes and replaces Executive Orders 12612 (Federalism) and 12875 (Enhancing the Intergovernmental Partnership). Executive Order 13132 requires EPA to develop an accountable process to ensure ''meaningful and timely input by State and local officials in the development of regulatory policies that have federalism implications.'' ''Policies that have federalism implications'' is defined in the Executive Order to include regulations that have ''substantial direct effects on the States, on the relationship between the national government and the States, or on the distribution of power and responsibilities among the various levels of government.'' Under Executive Order 13132, EPA may not issue a regulation that has federalism implications, that imposes substantial direct compliance costs, and that is not required by statute, unless the Federal government provides the funds necessary to pay the direct compliance costs incurred by State and local governments, or EPA consults with State and local officials early in the process of developing the proposed regulation. EPA also may not issue a regulation that has federalism implications and that preempts State law unless the Agency consults with State and local officials early in the process of developing the proposed regulation.

This final rule will not have substantial direct effects on the States, on the relationship between the national government and the States, or on the distribution of power and responsibilities among the various levels of government, as specified in Executive Order 13132 (64 FR 43255, August 10, 1999), because it merely approves a state rule implementing a federal standard, and does not alter the relationship or the distribution of power and responsibilities established in the Clean Air Act.'' Thus, the requirements of section 6 of the Executive Order do not apply to this rule.

C. Executive Order 13045

Executive Order 13045, entitled ''Protection of Children from Environmental Health Risks and Safety Risks'' (62 FR 19885, April 23, 1997), applies to any rule that the EPA determines: (1) Is ''economically significant,'' as defined under Executive Order 12866, and (2) the environmental health or safety risk addressed by the rule has a disproportionate effect on children. If the regulatory action meets both criteria, the Agency must evaluate the environmental health or safety effects of the planned rule on children and explain why the planned regulation is preferable to other potentially effective and reasonably feasible alternatives considered by the Agency.

This final rule is not subject to Executive Order 13045 because it is not an economically significant regulatory action as defined by Executive Order 12866, and it does not address an environmental health or safety risk that would have a disproportionate effect on children.

D. Executive Order 13084

Under Executive Order 13084, EPA may not issue a regulation that is not required by statute, that significantly affects or uniquely affects the communities of Indian tribal governments, and that imposes substantial direct compliance costs on those communities, unless the Federal government provides the funds necessary to pay the direct compliance costs incurred by the tribal governments. If EPA complies by consulting, Executive Order 13084 requires EPA to provide to the Office of Management and Budget, in a separately identified section of the preamble to the rule, a description of the extent of EPA's prior consultation with representatives of affected tribal governments, a summary of the nature of their concerns, and a statement supporting the need to issue the regulation. In addition, Executive Order 13084 requires EPA to

develop an effective process permitting elected and other representatives of Indian tribal governments ''to provide meaningful and timely input in the development of regulatory policies on matters that significantly or uniquely affect their communities.'' Today's rule does not significantly or uniquely affect the communities of Indian tribal governments. This action does not involve or impose any requirements that affect Indian Tribes. Accordingly, the requirements of section 3(b) of Executive Order 13084 do not apply to this rule.

E. Regulatory Flexibility Act

The Regulatory Flexibility Act (RFA) generally requires an agency to conduct a regulatory flexibility analysis of any rule subject to notice and comment rulemaking requirements unless the agency certifies that the rule will not have a significant economic impact on a substantial number of small entities. Small entities include small businesses, small not-for-profit enterprises, and small governmental jurisdictions. This final rule will not have a significant impact on a substantial number of small entities because SIP approvals under section 110 and subchapter I, part D of the Clean Air Act do not create any new requirements but simply approve requirements that the State is already imposing. Therefore, because the Federal SIP approval does not create any new requirements, I certify that this action will not have a significant economic impact on a substantial number of small entities. Moreover, due to the nature of the Federal-State relationship under the Clean Air Act, preparation of a flexibility analysis would constitute Federal inquiry into the economic reasonableness of state action. The Clean Air Act forbids EPA to base its actions concerning SIPs on such grounds. *Union Electric Co.* v. *U.S. EPA,* 427 U.S. 246, 255–66 (1976); 42 U.S.C. 7410(a)(2).

This final rule will not have a significant impact on a substantial number of small entities because EPA's disapproval of the State request under section 110 and subchapter I, part D of the CAA does not affect any existing requirements applicable to small entities. Any pre-existing federal requirements remain in place after this disapproval. Federal disapproval of the state submittal does not affect its state-enforceability. Moreover, EPA's disapproval of the submittal does not impose any new Federal requirements. Therefore, I certify that this disapproval action does not have a significant impact on a substantial number of small entities because it does not remove existing requirements and impose any new Federal requirements.

F. Unfunded Mandates

Under section 202 of the Unfunded Mandates Reform Act of 1995 (''Unfunded Mandates Act''), signed into law on March 22, 1995, EPA must prepare a budgetary impact statement to accompany any proposed or final rule that includes a Federal mandate that may result in estimated annual costs to State, local, or tribal governments in the aggregate; or to private sector, of $100 million or more. Under section 205, EPA must select the most cost-effective and least burdensome alternative that achieves the objectives of the rule and is consistent with statutory requirements. Section 203 requires EPA to establish a plan for informing and advising any small governments that may be significantly or uniquely impacted by the rule.

EPA has determined that the approval action promulgated does not include a Federal mandate that may result in estimated annual costs of $100 million or more to either State, local, or tribal governments in the aggregate, or to the private sector. This Federal action approves pre-existing requirements under State or local law, and imposes no new requirements. Accordingly, no additional costs to State, local, or tribal governments, or to the private sector, result from this action. This Federal disapproval action maintains pre-existing Federal requirements that have been in effect since November 10, 1975. Accordingly, no additional costs to State, local, or tribal governments, or to the private sector result from this action.

G. Submission to Congress and the Comptroller General

The Congressional Review Act, 5 U.S.C. 801 *et seq.*, as added by the Small Business Regulatory Enforcement Fairness Act of 1996, generally provides that before a rule may take effect, the agency promulgating the rule must submit a rule report, which includes a copy of the rule, to each House of the Congress and to the Comptroller General of the United States. EPA will submit a report containing this rule and other required information to the U.S. Senate, the U.S. House of Representatives, and the Comptroller General of the United States prior to publication of the rule in the **Federal Register**. This rule is not a ''major rule'' as defined by 5 U.S.C. 804(2).

H. National Technology Transfer and Advancement Act

Section 12 of the National Technology Transfer and Advancement Act (NTTAA) of 1995 requires Federal agencies to evaluate existing technical standards when developing a new regulation. To comply with NTTAA, EPA must consider and use ''voluntary consensus standards'' (VCS) if available and applicable when developing programs and policies unless doing so would be inconsistent with applicable law or otherwise impractical. EPA believes that VCS are inapplicable to this action. Today's action does not require the public to perform activities conducive to the use of VCS.

I. Petitions for Judicial Review

Under section 307(b)(1) of the Clean Air Act, petitions for judicial review of this action on West Virginia's minor new source review and existing stationary source operating permit program must be filed in the United States Court of Appeals for the appropriate circuit by March 13, 2000. Filing a petition for reconsideration by the Administrator of this final rule does not affect the finality of this rule for the purposes of judicial review nor does it extend the time within which a petition for judicial review may be filed, and shall not postpone the effectiveness of such rule or action.

This action approving in part and disapproving in part revisions to West Virginia's changes to West Virginia's minor new source review program under section 110, and approving West Virginia's minor new source review and existing stationary source operating permit program under sections 110 and 112(l) of the Clean Air Act for purposes of limiting potential to emit may not be challenged later in proceedings to enforce its requirements. (See section 307(b)(2).)

List of Subjects in 40 CFR Part 52

Environmental protection, Air pollution control, Incorporation by reference, Intergovernmental relations.

Dated: November 30, 1999.

Thomas C. Voltaggio,

Acting Regional Administrator, Region III.

40 CFR part 52 is amended as follows:

PART 52—[AMENDED]

1. The authority citation for part 52 continues to read as follows:

Authority: 42 U.S.C. 7401 *et seq.*

Subpart XX—West Virginia

2. Section 52.2520 is amended by adding paragraph (c)(43) to read as follows:

§ 52.2520 Identification of plan.

* * * * *

(c) * * *

(43) Revisions to West Virginia Regulation 45 CSR 13 submitted on August 26, 1994 by the West Virginia Department of Environmental Protection.

(I) Incorporation by reference.

(A) Letter of August 26, 1994 from the West Virginia Department of Environmental Protection transmitting 45 CSR 13 ''Permits for Construction, Modification, Relocation and Operation of Stationary Sources of Air Pollutants, Notification Requirements, Temporary Permits, General Permits, and Procedures for Evaluation''.

(B) Revised version of 45 CSR 13 ''Permits for Construction, Modification, Relocation and Operation of Stationary Sources of Air Pollutants, Notification Requirements, Temporary Permits, General Permits, and Procedures for Evaluation'', sections: 1 except for the reference in subsection 1.1 to major stationary sources which have not been issued a permit pursuant to 45 CSR 30, 2–8, 10, 11 except for subsection 11.2, and Tables 45–13A and 45–13B, effective April 27, 1994.

(ii) Additional Material.

(A) Remainder of August 26, 1994 State submittal pertaining to 45 CSR 13, ''Permits for Construction, Modification, Relocation and Operation of Stationary Sources of Air Pollutants, Notification Requirements, Temporary Permits, General Permits, and Procedures for Evaluation''.

(B) Letter of September 5, 1996 from the West Virginia Office of Air Quality requesting EPA approval of 45 CSR 13 under 112(l) of the Clean Air Act, and clarifying that the definition of ''major stationary source'' in 45 CSR 13 will be interpreted consistently with the 45 CSR 14 and 45 CSR 19 programs as to the types of source categories which need to include fugitive emissions.

3. Section 52.2522 is amended by adding paragraph (h) to read as follows:

§ 52.2522 Approval status.

* * * * *

(h) EPA disapproves the portion of 45 CSR 13 subsection 1 referencing major stationary sources which have not been issued a permit pursuant to 45 CSR 30 and section 11.2, submitted by the West Virginia Department of Environmental Protection on August 26, 1994, as revisions to the West Virginia SIP. These provisions do not meet the requirements of 40 CFR 51.160 for scope. EPA also disapproves 45 CSR 13 section 9, submitted by the West Virginia Department of Environmental Protection on August 26, 1994, as a revision to the West Virginia SIP. These provisions do not meet the requirements of 40 CFR 51.161 for public participation.

[FR Doc. 00–490 Filed 1–12–00; 8:45 am]

BILLING CODE 6560–50–P

ENVIRONMENTAL PROTECTION AGENCY

40 CFR Part 52

[CA172–0203; FRL–6513–9]

Approval and Promulgation of Implementation Plans; California State Implementation Plan Revision, Kern County Air Pollution Control District

AGENCY: Environmental Protection Agency (EPA).

ACTION: Final rule.

SUMMARY: EPA is finalizing the approval of a revision to the California State Implementation Plan (SIP) proposed in the **Federal Register** on August 10, 1999. This revision concerns Kern County Air Pollution Control District (KCAPCD)—Rule 410.4, Surface Coating of Metal Parts and Products. This approval action will incorporate this rule into the federally approved SIP. The intended effect of approving this rule is to regulate emissions of volatile organic compounds (VOCs) according to the requirements of the Clean Air Act, as amended in 1990 (CAA or the Act). This revised rule controls VOC emissions from the surface coating of miscellaneous metal parts and products. Thus, EPA is finalizing the approval of this revision into the California SIP under provisions of the CAA regarding EPA action on SIP submittals, SIPs for national primary and secondary ambient air quality standards and plan requirements for nonattainment areas.

EFFECTIVE DATE: This action is effective on February 14, 2000.

ADDRESSES: Copies of the rule revisions and EPA's evaluation report for this rule are available for public inspection at EPA's Region IX office during normal business hours. Copies of the submitted rule revisions are available for inspection at the following locations:

Rulemaking Office (AIR–4), Air Division, U.S. Environmental Protection Agency, Region IX, 75 Hawthorne Street, San Francisco, CA 94105;

Environmental Protection Agency, Air Docket (6102), 401 ''M'' Street, SW., Washington, D.C. 20460;

California Air Resources Board, Stationary Source Division, Rule Evaluation Section, 2020 ''L'' Street, Sacramento, CA 95812; and,

Kern County Air Pollution Control District, 2700 M Street, Suite 302, Bakersfield, CA 93301.

FOR FURTHER INFORMATION CONTACT: Jerald S. Wamsley, Rulemaking Office, (AIR–4), Air Division, U.S. Environmental Protection Agency, Region IX, 75 Hawthorne Street, San Francisco, CA 94105, Telephone: (415) 744–1226.

SUPPLEMENTARY INFORMATION:

I. Applicability

EPA is approving Kern County Air Pollution Control District (KCAPCD) Rule 410.4, Surface Coating of Metal Parts and Products for inclusion within the California SIP. This rule was submitted by the California Air Resources Board (CARB) to EPA on May 10, 1996.

II. Background

On August 19, 1999 (see 64 FR 45216), EPA proposed to approve KCAPCD Rule 410.4, Surface Coating of Metal Parts and Products. KCAPCD Rule 410.4 was adopted and revised on March 7, 1996. In turn, the California Air Resources Board submitted this rule to EPA on May 10, 1996. CARB submitted this rule in response to EPA's 1988 SIP-Call and the CAA section 182(a)(2)(A) requirement that nonattainment areas fix their reasonably available control technology (RACT) rules for ozone according to EPA guidance that interpreted the requirements of the pre-amendment Act. A detailed discussion of the background for KCAPCD Rule 410.4 and nonattainment areas is provided in the August 19, 1999 Notice Direct Final Rulemaking (NDFRM) (see 64 FR 45178).

Having received a public comment on its August 19, 1999 direct final action to approve KCAPCD Rule 410.4, EPA removed this revision to the California SIP on November 8, 1999 (see 64 FR 60688). EPA will address this comment within this rulemaking.

EPA evaluated KCAPCD Rule 410.4 for consistency with the requirements of the CAA and EPA regulations and EPA interpretation of these requirements as expressed in the various EPA policy guidance documents referenced in the NDFRM cited above. EPA has found that this rule meets the applicable EPA requirements. A detailed discussion of the rule provisions and EPA's evaluation has been provided in the August 19, 1999 NDFRM (see 64 FR 45178) and in the technical support document (TSD) available at EPA's Region IX office.

III. Response to Public Comments

A 30-day public comment period was provided in the NPRM (see 64 FR 45216). EPA received one comment

concerning KCAPCD Rule 410.4 from Canam Steel Corporation (CSC). Where KCAPCD Rule 410.4 sets a VOC coating emissions limit of 340 gram/liter for air dried metal parts and products, CSC suggests that Rule 410.4 be changed to allow structural steel fabricators to use a higher VOC content coating. CSC asserts that when dip coating is used to coat large joists and structural steel members, a higher VOC content and less viscous coating may result in less overall VOC emissions than Rule 410.4's 340 gram per liter emissions limit.

EPA Response: KCAPCD Rule 410.4's 340 gram/liter VOC emissions limit is consistent with the relevant California Determination of Reasonably Available Control Technology and exceeds EPA's Control Technique Guideline emissions limit of 420 grams/liter for the air dried coating of miscellaneous metal parts and products. Because KCAPCD's 340 gram/liter VOC emission limit is part of the California SIP, KCAPCD cannot raise and EPA cannot approve a higher VOC emissions limit without considering and addressing the anti-backsliding requirements of Sections 110(l) and 193 of the Clean Air Act. These sections of the Clean Air Act restrict EPA's ability to approve state actions that may weaken the California SIP.

KCAPCD's adoption of the 340 gram/liter emissions limit and EPA's approval of this limit into the California SIP predates the March 7, 1996 adoption described within EPA's August 19, 1999 proposal. EPA approved the 340 grams per liter VOC emissions limit into the California SIP on July 25, 1996 (see 61 FR 38571) after reviewing the April 6, 1995 adopted version of KCAPCD Rule 410.4. Only recently have other states and EPA been able to review CSC's studies and consider revising their SIPs (see 64 FR 32415, June 17, 1999).

If Canam Steel Corp. wishes to pursue changes to KCAPCD Rule 410.4, EPA suggests that CSC present its studies to the KCAPCD and the CARB for consideration. Should California choose to amend the Rule 410.4, it must address Sections 110(l) and 193 of the CAA.

IV. EPA Action

EPA is finalizing action to approve KCAPCD Rule 410.4—Surface Coating of Metal Parts and Products for inclusion into the California SIP. EPA is approving the submittal under section 110(k)(3) as meeting the requirements of section 110(a) and Part D of the CAA. This approval action will incorporate KCAPCD Rule 410.4 into the federally approved SIP. The intended effect of approving this rule is to regulate emissions of VOCs according to requirements of the CAA.

V. Administrative Requirements

A. Executive Order 12866

The Office of Management and Budget (OMB) has exempted this regulatory action from Executive Order 12866, entitled ''Regulatory Planning and Review.''

B. Executive Order 13132

Federalism (64 FR 43255, August 10, 1999) revokes and replaces Executive Orders 12612, Federalism and 12875, Enhancing the Intergovernmental Partnership. Executive Order 13132 requires EPA to develop an accountable process to ensure ''meaningful and timely input by State and local officials in the development of regulatory policies that have federalism implications.'' ''Policies that have federalism implications'' is defined in the Executive Order to include regulations that have ''substantial direct effects on the States, on the relationship between the national government and the States, or on the distribution of power and responsibilities among the various levels of government.'' Under Executive Order 13132, EPA may not issue a regulation that has federalism implications, that imposes substantial direct compliance costs, and that is not required by statute, unless the Federal government provides the funds necessary to pay the direct compliance costs incurred by State and local governments, or EPA consults with State and local officials early in the process of developing the proposed regulation. EPA also may not issue a regulation that has federalism implications and that preempts State law unless the Agency consults with State and local officials early in the process of developing the proposed regulation.

This rule will not have substantial direct effects on the States, on the relationship between the national government and the States, or on the distribution of power and responsibilities among the various levels of government, as specified in Executive Order 13132 (64 FR 43255, August 10, 1999), because it merely approves a state rule implementing a federal standard, and does not alter the relationship or the distribution of power and responsibilities established in the Clean Air Act. Thus, the requirements of section 6 of the Executive Order do not apply to this rule.

C. Executive Order 13045

Protection of Children from Environmental Health Risks and Safety Risks (62 FR 19885, April 23, 1997), applies to any rule that: (1) Is determined to be ''economically significant'' as defined under Executive Order 12866, and (2) concerns an environmental health or safety risk that EPA has reason to believe may have a disproportionate effect on children. If the regulatory action meets both criteria, the Agency must evaluate the environmental health or safety effects of the planned rule on children, and explain why the planned regulation is preferable to other potentially effective and reasonably feasible alternatives considered by the Agency.

This rule is not subject to Executive Order 13045 because it does not involve decisions intended to mitigate environmental health or safety risks.

D. Executive Order 13084

Under Executive Order 13084, Consultation and Coordination with Indian Tribal Governments, EPA may not issue a regulation that is not required by statute, that significantly affects or uniquely affects the communities of Indian tribal governments, and that imposes substantial direct compliance costs on those communities, unless the Federal government provides the funds necessary to pay the direct compliance costs incurred by the tribal governments. If the mandate is unfunded, EPA must provide to the Office of Management and Budget, in a separately identified section of the preamble to the rule, a description of the extent of EPA's prior consultation with representatives of affected tribal governments, a summary of the nature of their concerns, and a statement supporting the need to issue the regulation.

In addition, Executive Order 13084 requires EPA to develop an effective process permitting elected and other representatives of Indian tribal governments ''to provide meaningful and timely input in the development of regulatory policies on matters that significantly or uniquely affect their communities.'' Today's rule does not significantly or uniquely affect the communities of Indian tribal governments. Accordingly, the requirements of section 3(b) of Executive Order 13084 do not apply to this rule.

E. Regulatory Flexibility Act

The Regulatory Flexibility Act (RFA) generally requires an agency to conduct

a regulatory flexibility analysis of any rule subject to notice and comment rulemaking requirements unless the agency certifies that the rule will not have a significant economic impact on a substantial number of small entities. Small entities include small businesses, small not-for-profit enterprises, and small governmental jurisdictions.

This final rule will not have a significant impact on a substantial number of small entities because SIP approvals under section 110 and subchapter I, part D of the Clean Air Act do not create any new requirements but simply approve requirements that the State is already imposing. Therefore, because the Federal SIP approval does not create any new requirements, I certify that this action will not have a significant economic impact on a substantial number of small entities.

Moreover, due to the nature of the Federal-State relationship under the Clean Air Act, preparation of flexibility analysis would constitute Federal inquiry into the economic reasonableness of state action. The Clean Air Act forbids EPA to base its actions concerning SIPs on such grounds. *Union Electric Co.* v. *U.S. EPA,* 427 U.S. 246, 255–66 (1976); 42 U.S.C. 7410(a)(2).

F. Unfunded Mandates

Under section 202 of the Unfunded Mandates Reform Act of 1995 (''Unfunded Mandates Act''), signed into law on March 22, 1995, EPA must prepare a budgetary impact statement to accompany any proposed or final rule that includes a Federal mandate that may result in estimated annual costs to State, local, or tribal governments in the aggregate; or to private sector, of $100 million or more. Under section 205, EPA must select the most cost-effective and least burdensome alternative that achieves the objectives of the rule and is consistent with statutory requirements. Section 203 requires EPA to establish a plan for informing and advising any small governments that may be significantly or uniquely impacted by the rule.

EPA has determined that the approval action promulgated does not include a Federal mandate that may result in estimated annual costs of $100 million or more to either State, local, or tribal governments in the aggregate, or to the private sector. This Federal action approves pre-existing requirements under State or local law, and imposes no new requirements. Accordingly, no additional costs to State, local, or tribal governments, or to the private sector, result from this action.

G. Submission to Congress and the Comptroller General

The Congressional Review Act, 5 U.S.C. 801 *et seq.*, as added by the Small Business Regulatory Enforcement Fairness Act of 1996, generally provides that before a rule may take effect, the agency promulgating the rule must submit a rule report, which includes a copy of the rule, to each House of the Congress and to the Comptroller General of the United States. EPA will submit a report containing this rule and other required information to the U.S. Senate, the U.S. House of Representatives, and the Comptroller General of the United States prior to publication of the rule in the **Federal Register**. A major rule cannot take effect until 60 days after it is published in the **Federal Register**. This rule is not a ''major'' rule as defined by 5 U.S.C. 804(2).

H. National Technology Transfer and Advancement Act

Section 12 of the National Technology Transfer and Advancement Act (NTTAA) of 1995 requires Federal agencies to evaluate existing technical standards when developing a new regulation. To comply with NTTAA, EPA must consider and use ''voluntary consensus standards'' (VCS) if available and applicable when developing programs and policies unless doing so would be inconsistent with applicable law or otherwise impractical.

The EPA believes that VCS are inapplicable to this action. Today's action does not require the public to perform activities conducive to the use of VCS.

I. Petitions for Judicial Review

Under section 307(b)(1) of the Clean Air Act, petitions for judicial review of this action must be filed in the United States Court of Appeals for the appropriate circuit by March 13, 2000. Filing a petition for reconsideration by the Administrator of this final rule does not affect the finality of this rule for the purposes of judicial review nor does it extend the time within which a petition for judicial review may be filed, and shall not postpone the effectiveness of such rule or action. This action may not be challenged later in proceedings to enforce its requirements. (See section 307(b)(2).)

List of Subjects in 40 CFR Part 52

Environmental protection, Air pollution control, Hydrocarbons, Incorporation by reference, Intergovernmental relations, Ozone, Reporting and recordkeeping requirements, Volatile organic compounds.

Dated: December 7, 1999.

David P. Howekamp,

Acting Regional Administrator, Region IX.

Part 52, chapter I, title 40 of the Code of Federal Regulations is amended as follows:

PART 52—[AMENDED]

1. The authority citation for part 52 continues to read as follows:

Authority: 42 U.S.C. 7401 *et seq.*

Subpart F—California

2. Section 52.220 is amended by adding paragraph (c) (231)(i)(B)(*6*) to read as follows:

§ 52.220 Identification of plan.

* * * * *

(c) * * *

(231) * * *

(i) * * *

(B) * * *

(*6*) Rule 410.4, adopted on June 26, 1979 and amended on March 7, 1996.

* * * * *

[FR Doc. 00–624 Filed 1–12–00; 8:45 am]

BILLING CODE 6560–50–P

ENVIRONMENTAL PROTECTION AGENCY

40 CFR Part 52

[DE–031–1029; FRL–6522–6]

Approval and Promulgation of Air Quality Implementation Plans; Delaware—Minor New Source Review and Federally Enforceable State Operating Permit Program

AGENCY: Environmental Protection Agency (EPA).

ACTION: Final rule.

SUMMARY: EPA is granting limited approval to a State Implementation Plan (SIP) revision submitted by the State of Delaware which amends its minor New Source Review (NSR) permit program. EPA is granting full approval of a second revision which establishes a mechanism for the terms and conditions of a permit to be deemed federally-enforceable for purposes of limiting the potential to emit regulated air contaminants, *i.e.,* a Federally Enforceable State Operating Permits Program (FESOPP). EPA is granting limited approval of changes to the minor NSR program, because it does not fully meet EPA's regulatory requirement for public participation. EPA is granting full approval of the FESOPP because it meets all applicable requirements.

EFFECTIVE DATE: This final rule is effective on February 14, 2000.

ADDRESSES: Copies of the documents relevant to this action are available for public inspection during normal business hours at the Air Protection Division, U.S. Environmental Protection Agency, Region III, 1650 Arch Street, Philadelphia, Pennsylvania 19103; the Air and Radiation Docket and Information Center, U.S. Environmental Protection Agency, 401 M Street, SW, Washington, DC 20460; and Delaware Department of Natural Resources & Environmental Control, 89 Kings Highway, P.O. Box 1401, Dover, Delaware 19903.

FOR FURTHER INFORMATION CONTACT: MaryBeth Bray at (215) 814–2632.

SUPPLEMENTARY INFORMATION:

I. Background

On April 6, 1998 (63 FR 16751), EPA published a notice of proposed rulemaking (NPR) proposing limited approval and full approval of revisions to amend Delaware's Minor New Source Review Program and to create a Federally Enforceable State Operating Permit Program (FESOPP), respectively. These formal SIP revisions were submitted by Delaware on June 4, 1997. These revisions amend Delaware Regulation No. 2 for its minor New Source Review (NSR) program and create a mechanism for the terms and conditions of a permit issued pursuant to Regulation No. 2 to be made ''federally enforceable'' for purposes of limiting a source's (PTE) to emit a regulated air pollutant. These revisions apply state-wide.

As explained in the April 6, 1998 NPR, EPA has determined that Delaware's revised Regulation No. 2 fully meets the requirements of 40 CFR 51.160–164 and the Clean Air Act (CAA) for minor NSR programs with the exception of the public participation requirements. The same NPR also explained that EPA has evaluated Delaware's FESOPP program against the federal enforceability criteria applicable to state operating permit program (non-title V) SIP submittals contained in a June 28, 1989 **Federal Register** (54 FR 27274). EPA has determined that Delaware's FESOPP program fully meets the requirements of EPA's June 28, 1989 criteria. The specific requirements of 40 CFR part 51 and the June 28, 1989 criteria as well as the rationale for EPA's proposed actions on Delaware's revisions are explained in the NPR and will not be restated here.

II. Response to Public Comments

EPA received comments from the National Environmental Development Association, Clean Air Regulatory Project (NEDA/CARP), an industry coalition group. These comments and EPA's responses are provided below.

Comment: NEDA/CARP's first comment challenged EPA's authority to act on any state SIP based on its interpretation of the requirement in the definition of ''potential to emit'' requiring federal enforceability. The federal Court of Appeals for the District of Columbia Circuit vacated the definition of ''potential to emit'' as it pertains to both the new source review rules and the federal operating permit rules, 40 CFR parts 51, 52, and 70. *See, Chemical Manufacturers Association* v. *EPA,* No. 89–1514 (Sept 15, 1995) and *Clean Air Implementation Project, et al* v. *Browner,* Civ. No. 92–1303 (June 28, 1996). While the definition was not vacated as it pertains to the sources of hazardous air pollutant, 40 CFR 63.2, it nonetheless was remanded to the Environmental Protection Agency for further rulemaking consistent with the court's directives in *National Mining Association, et al.* v. *EPA,* 93 F.3d 1351 (D.C. Cir. 1994). As of this date, EPA has not proposed further rulemaking on the PTE definition for any CAA programs. Since EPA lacks federal authority to include federal enforceability in the definition of ''PTE'' under both the part 70 and new source review program for the foregoing reason, it is both inappropriate and legally objectionable for EPA to take action on any SIP revision on the basis that the requirement of federal enforceability remains a legal requirement for a state's minor, major prevention of significant deterioration or NSR programs, or its operating permit program. Furthermore, reliance on EPA's 1989 ''federal enforceability'' guidance is inappropriate after the D.C. Circuit decisions cited above.

Response: In short, EPA is not interpreting the definition of ''potential to emit'' as requiring federal enforceability in order to approve Delaware's minor new source review and state operating permit programs. EPA recognizes that limitations on potential emissions need not be federally enforceable under federal new source review and federal operating permit rules in light of the court decisions cited above. Notwithstanding, Delaware requested EPA approval of its program for the purpose of creating federally enforceable limits on a source's potential emissions. For the reasons discussed in the NPR, EPA has found Delaware's program to meet the minimum requirements under the SIP for approval of minor new source review and federally enforceable state operating permits programs. The fact that Delaware's program may be used to establish federally enforceable limits on potential emission does not render the program disapprovable. Therefore, EPA disagrees with NEDA/CARP's conclusion that the agency lacks authority to approve Delaware's program as a SIP revision.

Until EPA promulgates rules establishing otherwise, states may effectively limit potential emissions to avoid applicability of certain requirements even if such limits are not federally enforceable. Given the uncertainty of the final outcome of the requirement for federally enforceability, however, EPA does not recommend for states to delay submitting state operating permit programs for SIP approval, or to withdrawal programs previously approved under such authorities. Sources with federally enforceable limits on potential emissions will be less likely to have to apply for revised permits or be subject to major source requirements should the requirement for federally enforceability be reinstated.

Comment: NEDA/CARP also questioned EPA's basis for proposing limited approval of Delaware's revised minor NSR regulations, *i.e.,* on the basis that the new regulation does not fully meet the current 40 CFR 51.161 requirements for public participation. The commenter points out that EPA proposed revisions to the public participation requirements under 40 CFR parts 51, 52, and 70 on August 31, 1995. Furthermore, these revisions are being discussed by a group of stakeholders comprised of EPA, industry, environmental groups, and state and local agencies in preparation for a final rulemaking action. NEDA/CARP contends that Delaware should be allowed to retain some flexibility in light of potential changes to federal requirements.

Response: EPA acknowledges that the August 31, 1995 proposed revisions to 40 CFR parts 51, 52, and 70 included substantial revisions to public participation. However, EPA must review and approve SIP revisions according to existing regulations and Delaware's revised Regulation No. 2 is not consistent with the current version of 40 CFR 51.161. Furthermore, EPA can not presuppose how the final 40 CFR part 51, 52, and 70 rules will be written. In the particular case of revised Regulation No. 2, it appears that Delaware's new minor NSR requirements for public participation are not entirely consistent with EPA's August 31, 1995 proposed changes to 40 CFR 51.161. Nevertheless, EPA has determined that overall, revised

Regulation No. 2 strengthens the current SIP by imposing a requirement for public participation where none had existed before. Should the final part 51, 52, and 70 rules be issued in a scope and manner that accommodates the revised Regulation No. 2 provisions, this limited approval will convert to a full approval.

III. Final Action

EPA is granting limited approval of amendments to Delaware's minor new source review program as a revision to the Delaware SIP. Limited approval is granted because the revised Regulation No. 2 overall strengthens the current minor NSR program in Delaware's SIP but does not fully meet the requirements of 40 CFR 51.161. Under a limited approval, if EPA's future national rulemaking action and revisions to 40 CFR 51.161 is consistent with Delaware's public participation regulations under Regulation No. 2, this limited approval will convert to a full approval. EPA is granting full approval of revisions to Regulation No. 2 which create a mechanism for the terms and conditions of a permit to be made federally enforceable for the purposes of limiting a source's PTE, i.e., a FESOPP, as a revision to the Delaware SIP.

IV. Administrative Requirements

A. Executive Order 12866

The Office of Management and Budget (OMB) has exempted this regulatory action from review under E.O. 12866, entitled ''Regulatory Planning and Review.''

B. Executive Order 13132

Federalism (64 FR 43255, August 10, 1999) revokes and replaces Executive Orders 12612 (Federalism) and 12875 (Enhancing the Intergovernmental Partnership). Executive Order 13132 requires EPA to develop an accountable process to ensure ''meaningful and timely input by State and local officials in the development of regulatory policies that have federalism implications.'' ''Policies that have federalism implications'' is defined in the Executive Order to include regulations that have ''substantial direct effects on the States, on the relationship between the national government and the States, or on the distribution of power and responsibilities among the various levels of government.'' Under Executive Order 13132, EPA may not issue a regulation that has federalism implications, that imposes substantial direct compliance costs, and that is not required by statute, unless the Federal government provides the funds necessary to pay the direct compliance costs incurred by State and local governments, or EPA consults with State and local officials early in the process of developing the proposed regulation. EPA also may not issue a regulation that has federalism implications and that preempts State law unless the Agency consults with State and local officials early in the process of developing the proposed regulation.

This final rule will not have substantial direct effects on the States, on the relationship between the national government and the States, or on the distribution of power and responsibilities among the various levels of government, as specified in Executive Order 13132 (64 FR 43255, August 10, 1999), because it merely approves a state rule implementing a federal standard, and does not alter the relationship or the distribution of power and responsibilities established in the CAA. Thus, the requirements of section 6 of the Executive Order do not apply to this rule.

C. Executive Order 13045

E.O. 13045, entitled ''Protection of Children from Environmental Health Risks and Safety Risks'' (62 FR 19885, April 23, 1997), applies to any rule that the EPA determines: (1) Is ''economically significant,'' as defined under E.O. 12866, and (2) the environmental health or safety risk addressed by the rule has a disproportionate effect on children. If the regulatory action meets both criteria, the Agency must evaluate the environmental health or safety effects of the planned rule on children and explain why the planned regulation is preferable to other potentially effective and reasonably feasible alternatives considered by the Agency. This final rule is not subject to E.O. 13045 because it does not involve decisions intended to mitigate environmental health and safety risks.

D. Executive Order 13084

Under E.O. 13084, EPA may not issue a regulation that is not required by statute, that significantly affects or uniquely affects the communities of Indian tribal governments, and that imposes substantial direct compliance costs on those communities, unless the Federal government provides the funds necessary to pay the direct compliance costs incurred by the tribal governments. If the mandate is unfunded, EPA must provide to the Office of Management and Budget, in a separately identified section of the preamble to the rule, a description of the extent of EPA's prior consultation with representatives of affected tribal governments, a summary of the nature of their concerns, and a statement supporting the need to issue the regulation. In addition, Executive Order 13084 requires EPA to develop an effective process permitting elected and other representatives of Indian tribal governments ''to provide meaningful and timely input in the development of regulatory policies on matters that significantly or uniquely affect their communities.'' Today's rule does not significantly or uniquely affect the communities of Indian tribal governments. This action does not involve or impose any requirements that affect Indian Tribes. Accordingly, the requirements of section 3(b) of E.O. 13084 do not apply to this rule.

E. Regulatory Flexibility Act

The Regulatory Flexibility Act (RFA) generally requires an agency to conduct a regulatory flexibility analysis of any rule subject to notice and comment rulemaking requirements unless the agency certifies that the rule will not have a significant economic impact on a substantial number of small entities. Small entities include small businesses, small not-for-profit enterprises, and small governmental jurisdictions. This final rule will not have a significant impact on a substantial number of small entities because SIP approvals under sections 110 and 301, and subchapter I, part D of the CAA do not create any new requirements but simply approve requirements that the State is already imposing. Therefore, because the Federal SIP approval does not impose any new requirements, I certify that it does not have a significant impact on any small entities affected. Moreover, due to the nature of the Federal-State relationship under the CAA, preparation of a flexibility analysis would constitute Federal inquiry into the economic reasonableness of state action. The CAA forbids EPA to base its actions concerning SIPs on such grounds. *Union Electric Co.* v. *U.S. EPA,* 427 U.S. 246, 255–66 (1976); 42 U.S.C. 7410(a)(2).

F. Unfunded Mandates

Under Section 202 of the Unfunded Mandates Reform Act of 1995 (''Unfunded Mandates Act''), signed into law on March 22, 1995, EPA must prepare a budgetary impact statement to accompany any proposed or final rule that includes a Federal mandate that may result in estimated annual costs to State, local, or tribal governments in the aggregate; or to private sector, of $100 million or more. Under Section 205,

EPA must select the most cost-effective and least burdensome alternative that achieves the objectives of the rule and is consistent with statutory requirements. Section 203 requires EPA to establish a plan for informing and advising any small governments that may be significantly or uniquely impacted by the rule.

EPA has determined that the approval action promulgated does not include a Federal mandate that may result in estimated annual costs of $100 million or more to either State, local, or tribal governments in the aggregate, or to the private sector. This Federal action approves pre-existing requirements under State or local law, and imposes no new requirements. Accordingly, no additional costs to State, local, or tribal governments, or to the private sector, result from this action.

G. Submission to Congress and the Comptroller General

The Congressional Review Act, 5 U.S.C. 801 *et seq.*, as added by the Small Business Regulatory Enforcement Fairness Act of 1996, generally provides that before a rule may take effect, the agency promulgating the rule must submit a rule report, which includes a copy of the rule, to each House of the Congress and to the Comptroller General of the United States. EPA will submit a report containing this rule and other required information to the U.S. Senate, the U.S. House of Representatives, and the Comptroller General of the United States prior to publication of the rule in the **Federal Register**. This rule is not a ''major rule'' as defined by 5 U.S.C. 804(2).

H. National Technology Transfer and Advancement Act

Section 12 of the National Technology Transfer and Advancement Act (NTTAA) of 1995 requires Federal agencies to evaluate existing technical standards when developing a new regulation. To comply with NTTAA, EPA must consider and use ''voluntary consensus standards'' (VCS) if available and applicable when developing programs and policies unless doing so would be inconsistent with applicable law or otherwise impractical. EPA believes that VCS are inapplicable to this action. Today's action does not require the public to perform activities conducive to the use of VCS.

I. Petitions for Judicial Review

Under section 307(b)(1) of the CAA, petitions for judicial review of this action granting limited approval of Delaware's minor NSR program and approval of its non-title V FESOPP as SIP revisions must be filed in the United States Court of Appeals for the appropriate circuit by March 13, 2000. Filing a petition for reconsideration by the Administrator of this final rule does not affect the finality of this rule for the purposes of judicial review nor does it extend the time within which a petition for judicial review may be filed, and shall not postpone the effectiveness of such rule or action. This action may not be challenged later in proceedings to enforce its requirements. (See section 307(b)(2).)

List of Subjects in 40 CFR Part 52

Environmental protection, Air pollution control, Carbon monoxide, Hydrocarbons, Nitrogen dioxide, Ozone, Particulate matter, Reporting and record keeping requirements, Sulfur oxides.

Dated: January 4, 2000.

Bradley M. Campbell,

Regional Administrator, Region III.

40 CFR part 52 is amended as follows:

PART 52—[AMENDED]

1. The authority citation for part 52 continues to read as follows:

Authority: 42 U.S.C. 7401 *et seq.*

Subpart I—Delaware

2. In Section 52.420, the entry for Delaware Regulation 2 in the ''EPA-Approved Regulations in the Delaware SIP'' table in paragraph (c) is revised to read as follows:

§ 52.420 Identification of plan.

* * * * *

(c) EPA approved regulations.

EPA APPROVED REGULATIONS IN THE DELAWARE SIP

State citation	Title/subject	State effective date	EPA approval date	Additional explanation
*	*	*	*	*
Regulation 2—Permits				
Section 1	General Provisions	6/1/97	January 13, 2000 and 65 FR 2051.	
Section 2	Applicability	6/1/97	January 13, 2000 and 65 FR 2051.	
Section 3	Applications Prepared by Interested Parties.	6/1/97	January 13, 2000 and 65 FR 2051.	
Section 4	Cancellation of Permits	6/1/97	January 13, 2000 and 65 FR 2051.	
Section 5	Action on Applications	6/1/97	January 13, 2000 and 65 FR 2051.	
Section 6	Denial, Suspension or Revocation of Operating Permits.	6/1/97	January 13, 2000 and 65 FR 2051.	
Section 7	Transfer of Permit/Registration Prohibited.	6/1/97	January 13, 2000 and 65 FR 2051.	
Section 8	Availability of Permit/Registration.	6/1/97	January 13, 2000 and 65 FR 2051.	
Section 9	Registration Submittal	6/1/97	January 13, 2000 and 65 FR 2051.	
Section 10	Source Category Permit Applications.	6/1/97	January 13, 2000 and 65 FR 2051.	
Section 11	Permit Applications	6/1/97	January 13, 2000 and 65 FR 2051.	

EPA APPROVED REGULATIONS IN THE DELAWARE SIP—Continued

State citation	Title/subject	State effective date	EPA approval date	Additional explanation
Section 12	Public Participation	6/1/97	January 13, 2000 and 65 FR 2051.	Limited approval.
Section 13	Department Records	6/1/97	January 13, 2000 and 65 FR 2051.	
*	*	*	*	*

[FR Doc. 00–729 Filed 1–12–00; 8:45 am]

BILLING CODE 6560–50–P

ENVIRONMENTAL PROTECTION AGENCY

40 CFR Part 52

[CA 031–0202; FRL–6508–5]

Approval and Promulgation of Implementation Plans; California State Implementation Plan Revision, South Coast Air Quality Management District, El Dorado County Air Pollution Control District, Yolo-Solano Air Quality Management District, and Ventura County Air Pollution Control District

AGENCY: Environmental Protection Agency (EPA).

ACTION: Final rule.

SUMMARY: EPA is finalizing limited approvals and limited disapprovals of revisions to the California State Implementation Plan (SIP) proposed in the **Federal Register** on February 28, 1997, August 18, 1998 and September 14, 1998. This final action will incorporate these rules into the federally approved SIP. The intended effect of finalizing this action is to regulate emissions of oxides of nitrogen (NO_X) in accordance with the requirements of the Clean Air Act, as amended in 1990 (CAA or the Act). The revised rules control NO_X emissions from boilers and process heaters in petroleum refineries, stationary internal combustion engines, and Boilers, Steam Generators, and Process Heaters. Thus, EPA is finalizing a simultaneous limited approval and limited disapproval under CAA provisions regarding EPA action on SIP submittals and general rulemaking authority because these revisions, while strengthening the SIP, also do not fully meet the CAA provisions regarding plan submissions and requirements for nonattainment areas. As a result of this limited disapproval EPA will be required to impose highway funding or emission offset sanctions under the CAA unless the State submits and EPA approves corrections to the identified deficiencies within 18 months of the effective date of this disapproval. Moreover, EPA will be required to promulgate a Federal implementation plan (FIP) unless the deficiencies are corrected within 24 months of the effective date of this disapproval.

EFFECTIVE DATE: This action is effective on February 14, 2000.

ADDRESSES: Copies of the rule revisions and EPA's evaluation report for each rule are available for public inspection at EPA's Region IX office during normal business hours. Copies of the submitted rule revisions are available for inspection at the following locations:

Rulemaking Office, (AIR–4), Air Division, U.S. Environmental Protection Agency, Region IX, 75 Hawthorne Street, San Francisco, CA 94105.

Environmental Protection Agency, Air Docket (6102), 401 ''M'' Street, S.W., Washington, D.C. 20460

California Air Resources Board, Stationary Source Division, Rule Evaluation Section, 2020 ''L'' Street, Sacramento, CA 95814.

South Coast Air Quality Management District 21865 E. Copley Drive, Diamond Bar, CA 91765–4182.

El Dorado County Air Pollution Control District, 2850 Fairlane Court, Building C, Placerville, CA 95667.

Yolo-Solano Air Quality Management District, 1947 Galileo Court,Suite 103, Davis, CA 95616.

Ventura County Air Pollution Control District, 669 County Square Drive, Ventura, CA 93003.

FOR FURTHER INFORMATION CONTACT: For SCAQMD 1109, Mae Wang, For other rules, Thomas C. Canaday, Rulemaking Office, AIR–4, Air Division, US Environmental Protection Agency, Region IX, 75 Hawthorne Street, San Francisco, CA 94105, Telephone: (415) 744–1200 or (415) 744–1202.

SUPPLEMENTARY INFORMATION:

I. Applicability

The rules being approved into the California SIP include: South Coast Air Quality Management District (SCAQMD) Rule 1109, Emissions of Oxides of Nitrogen from Process Heaters and Boilers in Petroleum Refineries, El Dorado County Air Pollution Control District (EDCAPCD) Rule 233, Stationary Internal Combustion Engines, Yolo-Solano Air Quality Management District (YSAQMD) Rule 2.32, Stationary Internal Combustion Engines, and Ventura County Air Pollution Control District (VCAPCD) Rule 74.15.1, Boilers, Steam Generators, and Process Heaters. SCAQMD Rule 1109 was submitted by the California Air Resources Board (CARB) to EPA on March 26, 1990, EDCAPCD Rule 233 on October 20, 1994, YSAQMD Rule 2.32 on September 28, 1994, and VCAPCD Rule 74.15.1 on October 13, 1995.

II. Background

EPA proposed granting limited approval and limited disapproval of the following rules into the California SIP: SCAQMD Rule 1109, Emissions of Oxides of Nitrogen from Process Heaters and Boilers in Petroleum Refineries, on February 28, 1997 in 62 FR 9138; EDCAPCD Rule 233, Stationary Internal Combustion Engines and YSAQMD Rule 2.32, Stationary Internal Combustion Engines, on August 18, 1998 in 63 FR 44211; VCAPCD Rule 74.15.1, Boilers, Steam Generators, and Process Heaters, on September 14, 1998 in 63 FR 49056. Rule 1109 was adopted by SCAQMD on August 5, 1988, EDCAPCD adopted Rule 233 on October 18, 1994, YSAQMD adopted Rule 2.32 on August 10, 1994 and VCAPCD adopted Rule 74.15.1 on June 13, 1995. Rule 1109 was submitted by the CARB to EPA on March 26, 1990, EDCAPCD Rule 233 on October 20, 1994, YSAQMD Rule 2.32 on September 28, 1994, and VCAPCD Rule 74.15.1 on October 13, 1995. These rules were submitted in response to EPA's 1988 SIP Call and the CAA section 182(a)(2)(A) requirement that nonattainment areas fix their reasonably available control technology (RACT) rules for ozone in accordance with EPA guidance that interpreted the requirements of the pre-amendment Act. A detailed discussion of the background for each of the above rules and nonattainment areas is provided in the proposed rules (PR) cited above.

EPA has evaluated all of the above rules for consistency with the

requirements of the CAA and EPA regulations and EPA's interpretation of these requirements as expressed in the various EPA policy guidance documents referenced in the PRs. EPA is finalizing the limited approval of these rules in order to strengthen the SIP and finalizing the limited disapproval requiring the correction of the remaining deficiencies. Because none of the rules are currently in the SIP, the incorporation of these rules into the SIP would decrease the NO_X emissions allowed by the SIP. The submitted rules SCAQMD Rule 1109–Emissions of Oxides of Nitrogen from Process Heaters and Boilers in Petroleum Refineries, EDCAPCD Rule 233–Stationary Internal Combustion Engines, YSAQMD Rule 2.32–Stationary Internal Combustion Engines, and VCAPCD Rule 74.15.1–Boilers, Steam Generators, and Process Heaters, include the following provisions:

• General provisions including applicability, exemptions, and definitions.

• Exhaust emissions standards for oxides of nitrogen (NO_X) and carbon monoxide (CO)

• Administrative and monitoring requirements including compliance schedule, reporting requirements, monitoring and recordkeeping, and test methods.

Rules submitted to EPA for approval as revisions to the SIP must be fully enforceable, must maintain or strengthen the SIP, and must conform with EPA policy in order to be approved by EPA. When reviewing rules for SIP approvability, EPA evaluates enforceability elements such as test methods, record keeping, and compliance testing in addition to RACT guidance regarding emission limits. Incorporation of the Rules strengthens the SIP through the addition of enforceable measures such as record keeping, test methods, definitions, and more stringent compliance testing.

SCAQMD Rule 1109 controls emissions of nitrogen oxides from boilers and process heaters located in petroleum refineries with rated capacities greater than 40 MBtu per hour heat input. The rule requires units to meet a 0.03 pound per million Btu heat input limit in accordance with a phased time schedule.

• The emission limits will strengthen the SIP, but this rule contains deficiencies which must be corrected. Those deficiencies include Executive Officer discretion in approving continuous emission monitoring equipment and test methods, insufficient records to determine compliance, and an unapprovable provision for an alternative emission control plan.

EDCAPCD Rule 233 and YSAQMD Rule 2.32: In both of the Rules, the first option, which applies to existing IC engines that meet the limits by May 31, 1995, sets emission limits of 640 ppmv, 740 ppmv and 700 ppmv for rich-burn spark-ignited engines, lean-burn spark-ignited engines, and diesel engines respectively. In a Proposed Determination of Reasonably Available Control Technology and Best Available Retrofit Control Technology for Stationary Internal Combustion Engines dated December 1997, the State of California Air Resources Board (CARB) determined RACT limits for IC engines rated at 50 brake horsepower or more to be 50 parts per million volume (ppmv) for rich-burn spark-ignited engines, 125 ppmv for lean-burn spark-ignited engines, and 350 ppmv for diesel engines. These limits were determined based on previously implemented regulatory control in Ventura County and San Diego County.

• EPA agrees that these limits are consistent with the Agency's guidance and policy for making RACT determinations in terms of general cost-effectiveness, emission reductions, and environmental impacts. Both EDCAPCD Rule 233 and YSAQMD Rule 2.32 provide three options for demonstrating compliance. The EPA has determined that these limits do not meet RACT for IC engines. Although the monitoring and recordkeeping provisions of EDCAPCD Rule 233 and YSAQMD Rule 2.32 will strengthen the SIP, these rules contain deficiencies related to the emissions limits for oxides of nitrogen (NO_X), as well as other deficiencies. VCAPCD Rule 74.15.1 controls emissions of oxides of nitrogen from boilers, steam generators, and process heaters.

• The Rule provides an automatic exemption from compliance for emissions that occur during start-up, shutdown, or under breakdown conditions. These conditions are not defined in the rule. Such automatic exemptions are not allowed under EPA policy as contained in the EPA policy memorandum signed by Kathleen M. Bennett, ''Policy on Excess Emissions During Startup, Shutdown, Maintenance and Malfunctions,'' dated February 15, 1983, and ''State Implementation Plans: Policy Regarding Excess Emissions During Malfunctions, Startup, and Shutdown,'' US EPA, Office of Air Quality Planning and Standards letter dated September 20, 1999. In order to be consistent with EPA policy, Rule 74.15.1 must be modified to either eliminate this exemption, or to define the conditions of its applicability to conform with the excess emissions memoranda.

A detailed discussion of the rules provisions and evaluations has been provided in the PRs and in technical support documents (TSDs) available at EPA's Region IX office. TSDs prepared by EPA are dated January 22, 1997 for SCAQMD Rule 1109, July 21, 1998 for EDCAPCD Rule 233 and YSAQMD Rule 2.32, and August 18, 1998 for VCAPCD Rule 74.15.1.

III. Response to Public Comments

A 30-day public comment period was provided in 62 FR 9138. EPA received no comments on the proposed NPRs.

IV. EPA Action

EPA is finalizing a limited approval and a limited disapproval of the above-referenced rules. The limited approval of these rules is being finalized under section 110(k)(3) in light of EPA's authority pursuant to section 301(a) to adopt regulations necessary to further air quality by strengthening the SIP. The approval is limited in the sense that the rules strengthen the SIP. However, the rules do not meet the section 182(a)(2)(A) CAA requirement because of the rules deficiencies which were discussed in the PR. Thus, in order to strengthen the SIP, EPA is granting limited approval of these rules under sections 110(k)(3) and 301(a) of the CAA. This action approves the rules into the SIP as federally enforceable rules.

At the same time, EPA is finalizing the limited disapproval of these rules because they contain deficiencies that have not been corrected as required by section 182(a)(2)(A) of the CAA, and, as such, the rules do not fully meet the requirements of Part D of the Act. As stated in the proposed rules, upon the effective date of the final rules, the 18 month clock for sanctions and the 24 month FIP clock will begin. Sections 179(a) and 110(c). If the State does not submit the required corrections and EPA does not approve the submittal within 18 months of the effective date of the final rules, either the highway sanction or the offset sanction will be imposed at the 18 month mark. It should be noted that the rules covered by this FR have been adopted by the Districts and are currently in effect in the Districts. EPA's limited disapproval action will not prevent the Districts or EPA from enforcing the rules.

V. Administrative Requirements

A. Executive Order 12866

The Office of Management and Budget (OMB) has exempted this regulatory

action from Executive Order 12866, entitled ''Regulatory Planning and Review.''

B. Executive Order 13132

Federalism (64 FR 43255, August 10, 1999) revokes and replaces Executive Orders 12612, Federalism and 12875, Enhancing the Intergovernmental Partnership. Executive Order 13132 requires EPA to develop an accountable process to ensure ''meaningful and timely input by State and local officials in the development of regulatory policies that have federalism implications.'' ''Policies that have federalism implications'' is defined in the Executive Order to include regulations that have ''substantial direct effects on the States, on the relationship between the national government and the States, or on the distribution of power and responsibilities among the various levels of government.'' Under Executive Order 13132, EPA may not issue a regulation that has federalism implications, that imposes substantial direct compliance costs, and that is not required by statute, unless the Federal government provides the funds necessary to pay the direct compliance costs incurred by State and local governments, or EPA consults with State and local officials early in the process of developing the proposed regulation. EPA also may not issue a regulation that has federalism implications and that preempts State law unless the Agency consults with State and local officials early in the process of developing the proposed regulation.

The final rules will not have substantial direct effects on the States, on the relationship between the national government and the States, or on the distribution of power and responsibilities among the various levels of government, as specified in Executive Order 13132. Thus, the requirements of section 6 of the Executive Order do not apply to the rules.

C. Executive Order 13045

Protection of Children from Environmental Health Risks and Safety Risks (62 FR 19885, April 23, 1997), applies to any rule that: (1) Is determined to be ''economically significant'' as defined under Executive Order 12866, and (2) Concerns an environmental health or safety risk that EPA has reason to believe may have a disproportionate effect on children. If the regulatory action meets both criteria, the Agency must evaluate the environmental health or safety effects of the planned rule on children, and explain why the planned regulation is preferable to other potentially effective and reasonably feasible alternatives considered by the Agency.

The rules are not subject to Executive Order 13045 because it does not involve decisions intended to mitigate environmental health or safety risks.

D. Executive Order 13084

Under Executive Order 13084, Consultation and Coordination with Indian Tribal Governments, EPA may not issue a regulation that is not required by statute, that significantly affects or uniquely affects the communities of Indian tribal governments, and that imposes substantial direct compliance costs on those communities, unless the Federal government provides the funds necessary to pay the direct compliance costs incurred by the tribal governments. If the mandate is unfunded, EPA must provide to the Office of Management and Budget, in a separately identified section of the preamble to the rule, a description of the extent of EPA's prior consultation with representatives of affected tribal governments, a summary of the nature of their concerns, and a statement supporting the need to issue the regulation.

In addition, Executive Order 13084 requires EPA to develop an effective process permitting elected and other representatives of Indian tribal governments ''to provide meaningful and timely input in the development of regulatory policies on matters that significantly or uniquely affect their communities.'' Today's rules do not significantly or uniquely affect the communities of Indian tribal governments. Accordingly, the requirements of section 3(b) of Executive Order 13084 do not apply to the rules.

E. Regulatory Flexibility Act

The Regulatory Flexibility Act (RFA) generally requires an agency to conduct a regulatory flexibility analysis of any rule subject to notice and comment rulemaking requirements unless the agency certifies that the rule will not have a significant economic impact on a substantial number of small entities. Small entities include small businesses, small not-for-profit enterprises, and small governmental jurisdictions.

The final rules will not have a significant impact on a substantial number of small entities because SIP approvals under section 110 and subchapter I, part D of the Clean Air Act do not create any new requirements but simply approve requirements that the State is already imposing. Therefore, because the Federal SIP approval does not create any new requirements, I certify that this action will not have a significant economic impact on a substantial number of small entities.

Moreover, due to the nature of the Federal-State relationship under the Clean Air Act, preparation of flexibility analysis would constitute Federal inquiry into the economic reasonableness of state action. The Clean Air Act forbids EPA to base its actions concerning SIPs on such grounds. *Union Electric Co.*, v. *US EPA*, 427 U.S. 246, 255–66 (1976); 42 U.S.C. 7410(a)(2).

F. Unfunded Mandates

Under section 202 of the Unfunded Mandates Reform Act of 1995 (''Unfunded Mandates Act''), signed into law on March 22, 1995, EPA must prepare a budgetary impact statement to accompany any proposed or final rule that includes a Federal mandate that may result in estimated annual costs to State, local, or tribal governments in the aggregate; or to private sector, of $100 million or more. Under section 205, EPA must select the most cost-effective and least burdensome alternative that achieves the objectives of the rule and is consistent with statutory requirements. Section 203 requires EPA to establish a plan for informing and advising any small governments that may be significantly or uniquely impacted by the rule.

EPA has determined that the approval action promulgated does not include a Federal mandate that may result in estimated annual costs of $100 million or more to either State, local, or tribal governments in the aggregate, or to the private sector. This Federal action approves pre-existing requirements under State or local law, and imposes no new requirements. Accordingly, no additional costs to State, local, or tribal governments, or to the private sector, result from this action.

G. Submission to Congress and the Comptroller General

The Congressional Review Act, 5 U.S.C. 801 *et seq.*, as added by the Small Business Regulatory Enforcement Fairness Act of 1996, generally provides that before a rule may take effect, the agency promulgating the rule must submit a rule report, which includes a copy of the rule, to each House of the Congress and to the Comptroller General of the United States. EPA will submit a report containing this rule and other required information to the U.S. Senate, the U.S. House of Representatives, and the Comptroller General of the United

States prior to publication of the rule in the **Federal Register**. A major rule cannot take effect until 60 days after it is published in the **Federal Register**. The rules are not ''major'' rules as defined by 5 U.S.C. 804(2).

H. National Technology Transfer and Advancement Act

Section 12 of the National Technology Transfer and Advancement Act (NTTAA) of 1995 requires Federal agencies to evaluate existing technical standards when developing a new regulation. To comply with NTTAA, EPA must consider and use ''voluntary consensus standards'' (VCS) if available and applicable when developing programs and policies unless doing so would be inconsistent with applicable law or otherwise impractical.

The EPA believes that VCS are inapplicable to this action. Today's action does not require the public to perform activities conducive to the use of VCS.

I. Petitions for Judicial Review

Under section 307(b)(1) of the Clean Air Act, petitions for judicial review of this action must be filed in the United States Court of Appeals for the appropriate circuit March 13, 2000. Filing a petition for reconsideration by the Administrator of the final rules does not affect the finality of the rules for the purposes of judicial review nor does it extend the time within which a petition for judicial review may be filed, and shall not postpone the effectiveness of such rules or action. This action may not be challenged later in proceedings to enforce its requirements. (See section 307(b)(2).)

List of Subjects in 40 CFR Part 52

Environmental protection, Air pollution control, Hydrocarbons, Incorporation by reference, Intergovernmental relations, Ozone, Reporting and recordkeeping requirements, Volatile organic compound.

Authority: 42 U.S.C. 7401 *et seq.*

Dated: November 18, 1999.

Laura Yoshii,

Deputy Regional Administrator, Region IX.

Part 52, chapter I, title 40 of the Code of Federal Regulations is amended as follows:

PART 52—[AMENDED]

1. The authority citation for part 52 continues to read as follows:

Authority: 42 U.S.C. 7401 *et seq.*

Subpart F—California

2. Section 52.220 is amended by adding paragraphs (c)(179)(i)(H), (c)(199)(i)(E)(*2*), (c)(203), (c)(225)(i)(C) introductory text, and (c)(225)(i)(G) to read as follows:

(c) * * *

(179) * * *

(i) * * *

(H) South Coast Air Quality Management District.

(*1*) Rule 1109 adopted on March 12, 1984 and amended on August 5, 1988.

* * * * *

(199) * * *

(i) * * *

(E) * * *

(*2*) Rule 2.32 adopted on August 10, 1994.

* * * * *

(203) New and amended regulations for the following APCDs were submitted on October 20, 1994, by the Governor's designee.

(i) Incorporation by reference.

(A) El Dorado County Air Pollution Control District.

(*1*) Rule 233 adopted on October 18, 1994.

* * * * *

(225) * * *

(i) * * *

(C) El Dorado County Air Pollution Control District.

* * * * *

(G) Ventura County Air Pollution Control District.

(*1*) Rule 74.15.1 revised on June 13, 1995.

* * * * *

[FR Doc. 00–623 Filed 1–12–00; 8:45 am]

BILLING CODE 6560–50–P

DEPARTMENT OF DEFENSE

48 CFR Parts 205 and 253

[DFARS Case 99–D029]

Defense Federal Acquisition Regulation Supplement; Paid Advertisements

AGENCY: Department of Defense (DoD).

ACTION: Final rule.

SUMMARY: The Acting Director of Defense Procurement has issued a final rule amending the Defense Federal Acquisition Regulation Supplement (DFARS) to eliminate a requirement for contracting officers to use a specific form when requesting approval to advertise in newspapers. DoD has determined that use of the form is no longer necessary.

EFFECTIVE DATE: January 13, 2000.

FOR FURTHER INFORMATION CONTACT: Ms. Melissa Rider, Defense Acquisition Regulations Council, PDUSD (AT&L) DP (DAR), IMD 3D139, 3062 Defense Pentagon, Washington, DC 20301–3062. Telephone (703) 602–4245; telefax (703) 602–0350. Please cite DFARS Case 99–D029.

SUPPLEMENTARY INFORMATION:

A. Background

DFARS 205.502 has required DoD contracting activities to use DD Form 1535, Request/Approval for Authority to Advertise, to document approval for the publication of paid advertisements in newspapers. DoD has determined that use of a specific form for this purpose is no longer necessary. Therefore, this final rule amends DFARS 205.502 and Part 253 to remove references to the form.

This rule was not subject to Office of Management and Budget review under Executive Order 12866, dated September 30, 1993.

B. Regulatory Flexibility Act

This final rule does not constitute a significant revision within the meaning of FAR 1.501 and Public Law 98–577 and publication for public comment is not required. However, DoD will consider comments from small entities concerning the affected DFARS subparts in accordance with 5 U.S.C. 610. Such comments should cite DFARS Case 99–D029.

C. Paperwork Reduction Act

The Paperwork Reduction Act does not apply because the rule does not impose any information collection requirements that require the approval of the Office of Management and Budget under 44 U.S.C. 3501, *et seq.*

List of Subjects in 48 CFR Parts 205 and 253

Government procurement.

Michele P. Peterson,

Executive Editor, Defense Acquisition Regulations Council.

Therefore, 48 CFR Parts 205 and 253 are amended as follows:

1. The authority citation for 48 CFR Parts 205 and 253 continues to read as follows:

Authority: 41 U.S.C. 421 and 48 CFR Chapter 1.

PART 205—PUBLICIZING CONTRACT ACTIONS

2. Section 205.502 is amended by revising paragraph (a)(ii) to read as follows:

205.502 Authority.

* * * * *

(a) * * *

(ii) Before advertising in newspapers, the contracting officer must obtain written approval from the agency official designated in accordance with paragraph (a)(i) of this section.

PART 253—FORMS

3. The note at the end of Part 253 is amended by removing the entry ''253.303–1535 Request/Approval for Authority to Advertise.''.

[FR Doc. 00–763 Filed 1–12–00; 8:45 am]

BILLING CODE 5000–04–M

DEPARTMENT OF DEFENSE

48 CFR Parts 209, 243, and 252

[DFARS Case 99–D303]

Defense Federal Acquisition Regulation Supplement; Institutions of Higher Education

AGENCY: Department of Defense (DoD).

ACTION: Interim rule with request for comments.

SUMMARY: The Acting Director of Defense Procurement has issued an interim rule amending the Defense Federal Acquisition Regulation Supplement (DFARS) to implement Section 549 of the National Defense Authorization Act for Fiscal Year 2000. Section 549 amends statutory provisions pertaining to the denial of Federal contracts and grants to institutions of higher education that prohibit Senior Reserve Officer Training Corps units or military recruiting on campus.

DATES: *Effective date:* January 13, 2000.

Comment date: Comments on the interim rule should be submitted in writing to the address shown below on or before March 13, 2000, to be considered in the formation of the final rule.

ADDRESSES: Interested parties should submit written comments to: Defense Acquisition Regulations Council, Attn: Ms. Amy Williams, PDUSD (AT&L) DP (DAR), IMD 3D139, 3062 Defense Pentagon, Washington, DC 20301–3062. Telefax (703) 602–0350.

E-mail comments submitted via the Internet should be addressed to: dfars@acq.osd.mil

Please cite DFARS Case 99–D303 in all correspondence related to this rule. E-mail comments should cite DFARS Case 99–D303 in the subject line.

FOR FURTHER INFORMATION CONTACT: Ms. Amy Williams, (703) 602–0288.

SUPPLEMENTARY INFORMATION:

A. Background

This interim rule revises DFARS 209.470, 243.105, and 252.209–7005 to implement Section 549 of the National Defense Authorization Act for Fiscal Year 2000 (Pub. L. 106–65). Section 549 amends 10 U.S.C. 983 to prohibit DoD from providing funds by contract or grant to an institution of higher education (including any subelement of that institution) if the Secretary of Defense determines that the institution (or any subelement of the institution) has a policy or practice that prohibits, or in effect prevents, Senior Reserve Officer Training Corps (ROTC) units or military recruiting on campus.

This rule was not subject to Office of Management and Budget review under Executive Order 12866, dated September 30, 1993.

B. Regulatory Flexibility Act

DoD does not expect this rule to have a significant economic impact on a substantial number of small entities within the meaning of the Regulatory Flexibility Act, 5 U.S.C. 601, *et seq.,* because the rule applies only to institutions of higher education that prohibit Senior ROTC units or military recruiting on campus. Therefore, DoD has not performed an initial regulatory flexibility analysis. DoD invites comments from small businesses and other interested parties. DoD also will consider comments from small entities concerning the affected DFARS subparts in accordance with 5 U.S.C. 610. Such comments should be submitted separately and should cite DFARS Case 99–D303.

C. Paperwork Reduction Act

The Paperwork Reduction Act does not apply because the rule does not impose any information collection requirements that require the approval of the Office of Management and Budget under 44 U.S.C. 3501, *et seq.*

D. Determination to Issue an Interim Rule

A determination has been made under the authority of the Secretary of Defense that urgent and compelling reasons exist to publish this interim rule prior to affording the public an opportunity to comment. This interim rule implements Section 549 of the National Defense Authorization Act for Fiscal Year 2000. Section 549 amends statutory provisions pertaining to the denial of Federal contracts and grants to institutions of higher education that prohibit Senior ROTC units or military recruiting on campus. Section 549 became effective on October 5, 1999. DoD will consider comments received in response to this interim rule in the formation of the final rule.

List of Subjects in 48 CFR Parts 209, 243, and 252

Government procurement.

Michele P. Peterson,

Executive Editor, Defense Acquisition Regulations Council.

Therefore, 48 CFR Parts 209, 243, and 252 are amended as follows:

1. The authority citation for 48 CFR Parts 209, 243, and 252 continues to read as follows:

Authority: 41 U.S.C. 421 and 48 CFR Chapter 1.

PART 209—CONTRACTOR QUALIFICATIONS

2. Sections 209.470 through 209.470–3 are revised and section 209.470–4 is added to read as follows:

209.470 Reserve Officer Training Corps and military recruiting on campus.

209.470–1 Definition.

Institution of higher education, as used in this section, means an institution that meets the requirements of 20 U.S.C. 1001 and includes all subelements of such an institution.

209.470–2 Policy.

(a) Except as provided in paragraph (b) of this subsection, 10 U.S.C. 983 prohibits DoD from providing funds by contract or grant to an institution of higher education if the Secretary of Defense determines that the institution has a policy or practice that prohibits or in effect prevents—

(1) The Secretary of a military department from maintaining, establishing, or operating a unit of the Senior Reserve Officer Training Corps (ROTC) at that institution;

(2) A student at that institution from enrolling in a unit of the senior ROTC at another institution of higher education;

(3) The Secretary of a military department or the Secretary of Transportation from gaining entry to campuses, or access to students on campuses, for purposes of military recruiting; or

(4) Military recruiters from accessing certain information pertaining to students enrolled at that institution.

(b) The prohibition in paragraph (a) of this subsection does not apply to an institution of higher education if the Secretary of Defense determines that—

(1) The institution has ceased the policy or practice described in paragraph (a) of this subsection; or

(2) The institution has a long-standing policy of pacifism based on historical religious affiliation.

209.470–3 Procedures.

If the Secretary of Defense determines that an institution of higher education is ineligible to receive DoD funds because of a policy or practice described in 209.470–2(a)—

(a) The Secretary of Defense will list the institution on the List of Parties Excluded from Federal Procurement and Nonprocurement Programs published by General Services Administration (also see FAR 9.404 and 32 CFR part 216); and

(b) DoD components—

(1) Must not solicit offers from, award contracts to, or consent to subcontracts with the institution;

(2) Must make no further payments under existing contracts with the institution; and

(3) Must terminate existing contracts with the institution.

209.470–4 Contract clause.

Use the clause at 252.209–7005, Reserve Officer Training Corps and Military Recruiting on Campus, in all solicitations and contracts with institutions of higher education.

PART 243—CONTRACT MODIFICATIONS

3. Section 243.105 is amended by revising paragraph (a)(ii) and removing paragraph (a)(iii). The revised text reads as follows;

243.105 Availablity of funds.

(a) * * *

(ii) In accordance with 10 U.S.C. 983, do not provide funds by contract or contract modification, or make contract payments, to an institution of higher education that has a policy or practice of hindering Senior Reserve Officer Training Corps units or military recruiting on campus as described at 209.470.

PART 252—SOLICITATION PROVISIONS AND CONTRACT CLAUSES

4. Section 252.209–7005 is revised to read as follows:

252.209–7005 Reserve Officer Training Corps and Military Recruiting on Campus.

As prescribed in 209.470–4, use the following clause:

Reserve Officer Training Corps and Military Recruiting on Campus (Jan 2000)

(a) *Definition.* ''Institution of higher education,'' as used in this clause, means an institution that meets the requirements of 20 U.S.C. 1001 and includes all subelements of such an institution.

(b) *Limitation on contract award.* Except as provided in paragraph (c) of this clause, an institution of higher education is ineligible for contract award if the Secretary of Defense determines that the institution has a policy or practice (regardless of when implemented) that prohibits or in effect prevents—

(1) The Secretary of a military department from maintaining, establishing, or operating a unit of the Senior Reserve Officer Training Corps (ROTC) (in accordance with 10 U.S.C. 654 and other applicable Federal laws) at that institution;

(2) A student at that institution from enrolling in a unit of the Senior ROTC at another institution of higher education;

(3) The Secretary of a military department or the Secretary of Transportation from gaining entry to campuses, or access to students (who are 17 years of age or older) on campuses, for purposes of military recruiting; or

Military recruiters from accessing, for purposes of military recruiting, the following information pertaining to students (who are 17 years of age or older) enrolled at that institution:

(i) Name.

(ii) Address.

(iii) Telephone number.

(iv) Date and place of birth.

(v) Educational level.

(vi) Academic major.

(vii) Degrees received.

(viii) Most recent educational institution enrollment.

(c) *Exception.* The limitation in paragraph (b) of this clause does not apply to an institution of higher education if the Secretary of Defense determines that—

(1) The institution has ceased the policy or practice described in paragraph (b) of this clause; or

(2) The institution has a long-standing policy of pacifism based on historical religious affiliation.

(d) *Agreement.* The Contractor represents that it does not now have, and agrees that during performance of this contract it will not adopt, any policy or practice described in paragraph (b) of this clause, unless the Secretary of Defense has granted an exception in accordance with paragraph (c)(2) of this clause.

(e) Notwithstanding any other clause of this contract, if the Secretary of Defense determines that the Contractor misrepresented its policies and practices at the time of contract award or has violated the agreement in paragraph (d) of this clause—

(1) The Contractor will be ineligible for further payments under this and other contracts with the Department of Defense; and

(2) The Government will terminate this contract for default for the Contractor's material failure to comply with the terms and conditions of award.

(End of clause)

[FR Doc. 00–765 Filed 1–12–00; 8:45 am]

BILLING CODE 5000–04–M

DEPARTMENT OF DEFENSE

48 CFR Part 235

[DFARS Case 99–D302]

Defense Federal Acquisition Regulation Supplement; Manufacturing Technology Program

AGENCY: Department of Defense (DoD).

ACTION: Interim rule with request for comments.

SUMMARY: The Acting Director of Defense Procurement has issued an interim rule amending the Defense Federal Acquisition Regulation Supplement (DFARS) to implement Section 216 of the National Defense Authorization Act for Fiscal Year 2000. Section 216 amends statutory provisions pertaining to cost-sharing requirements for contract5s under the Manufacturing Technology Program.

DATES: Effective date: January 13, 2000.

Comment date: Comments on the interim rule should be submitted in writing to the address shown below on or before March 13, 2000, to be considered in the formation of the final rule.

ADDRESSES: Interested parties should submit written comments to: Defense Acquisition Regulations Council, Attn: Ms. Susan Schneider, PDUSD(AT&L)DP(DAR), IMD 3D139, 3062 Defense Pentagon, Washington, DC 20301–3062. Telefax (703) 602–0350.

E-Mail comments submitted via the internet should be addressed to: dfars@acq.osd.mil

Please cite DFARS Case 99–D302 in all correspondence related to this rule. E-mail comments should cite DFARS Case 99–D302 in the subject line.

FOR FURTHER INFORMATION CONTACT: Ms. Susan Schneider, (703) 602–0326.

SUPPLEMENTARY INFORMATION:

A. Background

This interim rule revises DFARS 235.006–70 to implement Section 216 of the National Defense Authorization Act for Fiscal Year 2000 (Pub. L. 106–65). Section 216 amends 10 U.S.C. 2525 to eliminate the mandatory cost-sharing requirements for contracts under the Manufacturing Technology Program, and to provide that cost sharing be included as a factor in competitive procedures for evaluating proposals under manufacturing technology projects.

This rule was not subject to Office of Management and Budget review under Executive Order 12866, dated September 30, 1993.

B. Regulatory Flexibility Act

DoD does not expect this rule to have a significant economic impact on a substantial number of small entities within the meaning of the Regulatory Flexibility Act, 5 U.S.C. 601, *et seq.*, because DoD awards approximately only 20 new contracts under the Manufacturing Technology Program each year. Therefore, DoD has not performed an initial regulatory Flexibility analysis. DoD invites comments from small businesses and other interested parties. DoD also will consider comments from small entities concerning the affected DFARS subpart in accordance with 5 U.S.C. 610. Such comments should be submitted separately and should cite DFARS Case 99–D302.

C. Paperwork Reduction Act

The Paperwork Reduction Act does not apply because the rule does not impose any information collection requirements that require the approval of the office of Management and Budget under 44 U.S.C. 3501, *et seq.*

D. Determination To Issue an Interim Rule

A determination has been made under the authority of the Secretary of Defense that urgent and compelling reasons exist to publish this interim rule prior to affording the public an opportunity to comment. This interim rule implements Section 216 of the National Defense Authorization Act for Fiscal Year 2000. Section 216 eliminates the mandatory cost-sharing requirements in the Manufacturing Technology Program and provides that cost sharing be included as a factor in competitive procedures for evaluating proposals under manufacturing technology projects. Section 216 because effective on October 5, 1999. DoD will consider comments received in response to this interim rule in the formation of the final rule.

List of Subject in 48 CFR Part 235

Government procurement.

Michele P. Peterson,

Executive Editor, Defense Acquisition Regulations Council.

Therefore, 48 CFR Part 235 is amended as follows:

1. The authority citation for 48 CFR Part 235 continues to read as follows:

Authority: 41 U.S.C. 421 and 48 CFR Chapter 1.

PART 235—RESEARCH AND DEVELOPMENT CONTRACTING

2. Section 235.006–70 is revised to read as follows:

235.006–70 Manufacturing Technology Program.

In accordance with 10 U.S.C. 2525(d), for acquisitions under the Manufacturing Technology Program—

(a) Award all contracts using competitive procedures; and

(b) Include in all solicitations an evaluation factor that addresses the extent to which offerors propose to share in the cost of the project (see FAR 15.304).

[FR Doc. 00–764 Filed 1–12–00; 8:45 am]

BILLING CODE 5000–04–M

DEPARTMENT OF DEFENSE

48 CFR Part 241

[DFARS Case 99–D309]

Defense Federal Acquisition Regulation Supplement; Authority Relating to Utility Privatization

AGENCY: Department of Defense (DoD).

ACTION: Interim rule with request for comments.

SUMMARY: The Acting Director of Defense Procurement has issued an interim rule amending the Defense Federal Acquisition Regulation Supplement (DFARS) to implement Section 2812 of the National Defense Authorization Act for Fiscal Year 2000. Section 2812 provides that DoD may enter into utility service contracts related to the conveyance of a utility system for periods not to exceed 50 years.

DATES: Effective date: January 13, 2000.

Comment date: Comments on the interim rule should be submitted in writing to the address shown below on or before March 13, 2000, to be considered in the formation of the final rule.

ADDRESSES: Interested parties should submit written comments to: Defense Acquisition Regulations Council, Attn: Ms. Melissa Rider, PDUSD (AT&L)DP (DAR), IMD 3D139, 3062 Defense Pentagon, Washington, DC 20301–3062. Telefax (703) 602–0350.

E-mail comments submitted via the Internet should be addressed to: dfars@acq.osd.mil

Please cite DFARS Case 99–D309 in all correspondence related to this rule. E–mail comments should cite DFARS Case 99–D309 in the subject line.

FOR FURTHER INFORMATION CONTACT: Ms Melisssa Rider, (703) 602–4245.

SUPPLEMENTARY INFORMATION:

A. Background

This final rule adds a new section at DFARS 241.103 to implement Section 2812 of the National Defense Authorization Act for Fiscal Year 2000 (Pub. L. 106–65). Section 2812 amends 10 U.S.C. 2688 to provide authority for DoD to enter into utility service contracts related to the conveyance of a utility system for periods not to exceed 50 years.

This rule was not subject to Office of Management and Budget review under Executive Order 12866, dated September 30, 1993.

B. Regulatory Flexibility Act

DoD does not except this rule to have a significant economic impact on a substantial number of small entities within the meaning of the Regulatory Flexibility Act, 5 U.S.C. 601, *et seq.,* because utility services generally are not provided by small business concerns. Therefore, DoD has not performed an initial regulatory flexibility analysis. DoD invites comments from small businesses and other interested parties. DoD also will consider comments from small entities concerning the affected DFARS subpart in accordance with 5 U.S.C. 610. Such comments should be submitted separately and should cite DFARS Case 99–D309.

C. Paperwork Reduction Act

The Paperwork Reduction Act does not apply because the rule does not impose any information collection requirements that require the approval of the Office of Management and Budget under 44 U.S.C. 3501, *et seq.*

D. Determination To Issue an Interim Rule

A determination has been made under the authority of the Secretary of Defense that urgent and compelling reasons exist to publish this interim rule prior to affording the public an opportunity to comment. This interim rule amends the DFARS to add policy regarding DoD's authority to enter into utility service contracts with terms of up to 50 yeas, if the contracts are connected with the conveyance of a utility system. The rule implements Section 2812 of the National Defense Authorization Act for Fiscal Year 2000. Section 2812 became effective on October 5, 1999. DoD will consider comments received in response to this interim rule in the formation of the final rule.

List of Subjects in 48 CFR Part 241

Government procurement.

Michele P. Peterson,

Executive Editor, Defense Acquisition Regulations Council.

Therefore, 48 CFR Part 241 is amended as follows:

1. The authority citation for 48 CFR Part 241 continues to read as follows:

Authority: 41 U.S.C. 421 and 48 CFR Chapter 1.

PART 241—ACQUISITION OF UTILITY SERVICES

2. Section 241.103 is added to read as follows:

§ 241.103 Statutory and delegated authority.

The contracting office may enter into a utility service contract related to the conveyance of a utility system for a period not to exceed 50 years (10 U.S.C. 2688(c)(3)).

[FR Doc. 00–766 Filed 1–12–00; 8:45 am]

BILLING CODE 5000–04–M

DEPARTMENT OF TRANSPORTATION

National Highway Traffic Safety Administration

49 CFR Part 572

Docket No. NHTSA–99–6714

RIN 2127–AG76

Anthropomorphic Test Dummy; Occupant Crash Protection

AGENCY: National Highway Traffic Safety Administration (NHTSA), Department of Transportation.

ACTION: Final rule.

SUMMARY: This document amends 49 CFR part 572 by adding a new, more advanced 6-year-old child dummy (H–III6C). The new dummy, part of the family of Hybrid III test dummies, is more representative of humans than the existing one, and allows the assessment of the potential for more types of injuries. The new dummy is especially needed to evaluate the risks of air bag deployment for children, particularly unrestrained children. It will also provide greater and more useful information in a variety of environments to better evaluate child safety.

Adding the dummy to part 572 is the first step toward using the dummy to evaluate the safety of air bags for children. The issue of amending the agency's safety standards, such as the one on frontal occupant crash protection or the ones on child restraints, to specify use of the dummy in determining compliance with performance test requirements will be addressed in other rulemaking proceedings.

DATES: Effective Date: This regulation becomes effective March 13, 2000. The incorporation by reference of the publications listed in the rule was approved by the Director of the Federal Register as of March 13, 2000.

Petitions: Petitions for reconsideration must be received by February 28, 2000.

ADDRESSES: Petitions for reconsideration should refer to the docket number of this rule and be submitted to: Administrator, National Highway Traffic Safety Administration, 400 Seventh Street, SW, Washington, DC 20590.

FOR FURTHER INFORMATION CONTACT: For non-legal issues, you may call Stan Backaitis, Office of Crashworthiness Standards, at 202–366–4912.

For legal issues, you may call Rebecca MacPherson, Office of the Chief Counsel, at 202–366–2992.

You may send mail to both of these officials at National Highway Traffic Safety Administration, 400 Seventh St., SW., Washington, DC 20590.

SUPPLEMENTARY INFORMATION:

I. Summary of Decision

Based on NHTSA's use of the H–III6C 6-year-old dummy in calibration tests and in frontal impact tests involving restraints such as air bags and belts, we have concluded that this dummy is suitable for both research and compliance safety assessments. The dummy is not only considerably more biofidelic than its predecessor, the Part 572 Subpart I 6-year-old dummy, but it also has considerably more extensive instrumentation to measure impact responses such as forces, accelerations, moments, and deflections in conducting tests to evaluate vehicle occupant protection systems. Depending on the intended injury assessment needs, the dummy has the necessary instrumentation to measure the potential for injuries to the head, the upper and lower ends of the neck, the chest, the lumbar spine, the pelvis, and the femurs, as well as the forces on the iliac crests [1] caused by the lap belt. In extensive agency tests, the dummy exhibited excellent durability and robustness as a measuring test tool. Although other dummy users were invited to provide comments on their test experience with the H–III6C, their responses to the notice of proposed rulemaking (NPRM) were based primarily on data from calibration-type tests. Little of the data was from the dummy's response in systems tests. Accordingly, our judgment about adequacy of the dummy in system's tests is based on our own test data. However, we believe that our conclusion is consistent with the calibration data submitted in response to the NPRM by other dummy users, since those data provide a reasonably good match with the agency data.

We have decided to add the H–III6C to Part 572 as Subpart N, and designate it as the alpha version of the H–III6C dummy. Further changes to the dummy will be designated as beta, gamma, etc., to assure that modifications can be easily tracked and identified. The new dummy is defined by a drawing and specification package, a new procedures document for disassembly, assembly and inspection, and performance parameters including associated calibration procedures.

II. Background

The development of the dummy's initial concept and specifications was initiated by the Centers for Disease Control and Prevention (CDC) when it provided funds to Ohio State University to develop a design foundation for a Hybrid III type 6-year-old child dummy (H–III6C) in 1989. Ohio State University asked the Society of Automotive Engineers (SAE) to form an appropriate working group that could provide advice and guidance from the automotive perspective. The development of the H–III6C has continued since then under the guidance of the Hybrid III Dummy Family Task Force of SAE. NHTSA has also been involved in the development of the dummy, initially as an observer in meetings of the SAE Task Force, and later as a participant sharing relevant test data. As the development of the dummy approached maturity, we initiated a program in 1997 to evaluate the dummy to determine its readiness for use as a test device in agency compliance programs.

Upon completion of the evaluation program, which also involved a series of dummy modifications, we tentatively concluded that the upgraded dummy was suitable for potential incorporation into Part 572. On June 29, 1998, we published an NPRM in which we proposed to incorporate the Hybrid III type 6-year-old child dummy into Part 572 as Subpart N, and invited comments (63 FR 35170).

We received comments from 14 organizations: First Technology Safety Systems (FTSS), the American Academy of Pediatrics (AAP), Applied Safety Technology Corporation (ASTC), Robert A. Denton, Inc., Transportation Research Center, Inc. (TRC), International Electronic Engineering (IEE), TRW, Advocates for Highway and Auto Safety (Advocates), Entran, Mitsubishi, Volvo, SAE Dummy Test

[1] The ilium is the dorsal, upper and largest of the three bones composing the left or right half of the pelvis.

Equipment Subcommittee (DTES), National Transportation Safety Board (NTSB), and the American Automobile Manufacturers Association (AAMA). Several of the commenters expressly supported adding the H–III6C to Part 572, and others provided technical comments indicating overall support.

The comments tended to fall into two groups. Commenters either supported the rulemaking generally without being specific as to any particular aspect of the proposal, or they provided very specific, technical discussions on several portions of the proposal. Often, these technical comments dealt with procedures on how the dummy is set up and positioned for calibration test or concerns with the sufficiency and clarity of the dummy drawings. These highly technical comments are addressed in the ''Technical Analysis of Issues Report'' (TAIR–HIII6C) supporting this final rule. Where we have agreed with the comments, we have made appropriate changes in either the drawing package or the regulatory text. The TAIR–H–III6C is in the docket.

III. Dummy Drawings

Two of the commenters, primarily ASTC and to a lesser extent Denton, raised a number of questions about the specifications in the drawings, including missing and incomplete data, availability of molds and patterns, instrumentation, and whether several drawings cited in the drawings package replaced existing drawings already referenced in the CFR. To simplify analysis of the large number of detailed issues related to design specifications, we divided the comments into four categories: critical, performance, manufacturing, and other issues.

Critical Issues: This group of issues concerns those requested changes that, in our opinion, are essential to assure the dummy's structural consistency and its appropriate functioning. They involve a series of questions essential to dummy design, as well as missing or incomplete significant specifications. The issues deemed critical involve dummy drawings that need to be changed either by adjusting existing specifications or adding further specifications to assure a correct fit and interface between components and their appropriate functioning in the impact environment. While these changes are important, they must be addressed with a degree of technical specificity that will likely be appreciated only by the two dummy manufacturers who commented on the NPRM. Accordingly, they are fully discussed in the TAIR–H–III6C.

Performance Issues: This group of issues involves comments on drawings and specifications that we consider relate primarily to production decisions which dummy manufacturers need to address on their own. We believe the requested changes to the specifications falling in this category are of little consequence to the fit and function of the dummy. The performance issues primarily concern requests for the addition of new dimensions and specifications that have little, if any, functional significance for the part in question; expanding the specifications to include manufacturing processes and further details for material specifications; and assignment of dimensional and surface finish controls on parts that have no foreseeable effects to their fit and overall dummy performance. We have found no reason to include the requested information in the drawing set of the final rule. The inclusion of such information would be of little value, if any, and would not assure better quality of the manufactured dummy. Indeed, the addition of the specifications may reduce a dummy manufacturer's flexibility in selecting a superior production technique or process, and may preclude competition. The comments are fully discussed in the TAIR–H–III6C.

Manufacturing Issues: ASTC commented that the proposed drawing set does not allow another manufacturer to produce this dummy because it lacks surface contour information. ASTC stated that the surface contour information affects not only outside vinyl skin pieces, but also many internal structures such as skull, clavicle, clavicle link, and pelvic bone. ASTC argued this would create problems in interchangeability and equivalency between dummies produced by different manufacturers, and could also affect dummy performance. ASTC requested that the agency provide opportunities for commenters to review the dummy to answer their questions and provide patterns or parts for the surface contour information. Careful consideration was given to these comments. Several options were considered for resolving ASTC's concerns. The drawing review option was impracticable for this dummy, since drawings were already released as part of the NPRM package, and there was no way to assure that all parties would ever be satisfied with any contour definitions placed on the drawings. The availability of molds and patterns was also impracticable, since the agency does not own any molds and patterns for this dummy.[2] As a third option, the agency considered making a copy of the dummy available to interested manufacturers for non-destructive dimensional inspection and extraction of surface contour information. In order to provide all interested parties with the opportunity to inspect and measure the dummy, NHTSA decided it will make the dummy available to any interested party for a period of six months after the issuance of this final rule. Such access is subject to the following terms:

- All inspections are to take place at VRTC's convenience, although reasonable attempts will be made to accommodate the interested party's schedule.
- An individual or company that wishes to inspect the dummy will need to contract directly with TRC to make arrangements for an individual to oversee the measurement process. This oversight by TRC is necessary to ensure that the dummies are not damaged and are reassembled correctly without the undue expenditure of agency resources.

ASTC has already availed itself of this opportunity, although it was warned that prior to the issuance of this rule, the dummy was subject to changes.

Other Issues: Some issues were raised which do not fall into the above categories for this dummy. Discussion of those comments can be found in the TAIR–H–III6C.

IV. Calibration Procedures

The agency proposed calibration tests involving head drop tests, neck pendulum tests, thorax and knee impacts, and torso flexion tests. AAMA, TRC, TRW and Mitsubishi were the principal commenters on test procedures.

Discussion of the vast majority of these comments is left to the TAIR–H–III6C because they raise very minor issues. Nevertheless, we are discussing a couple of the comments here because they raise concerns as to whether the proposed semi-static torso flexion test and the knee calibration test should be calibration tests or simply initial, as received, inspection tests. This distinction is important because inspection tests usually are performed at the time the dummy is received from the manufacturer and are not necessarily repeated during the life of the dummy. An additional concern, unrelated to the inspection test issue, was raised that the impact probes

[2] The NPRM incorrectly stated that dummy molds and digital patterns would be part of the dummy specifications in the final rule. This statement was corrected in a correction notice that was published on September 3, 1998 (63 FR 46979), where we noted that NHTSA does not have molds or patterns for the H–III6C dummy.

specified for the knee and thorax tests were unduly design restrictive.

The semi-static torso flexion test (upper torso half relative to the lower half) was proposed as a calibration specification for this dummy. AAMA, TRC and TRW objected to characterizing this procedure as a calibration test, claiming it is not critical to the dummy's performance. Rather, they suggested it be retained as an inspection test as shown in the SAE user's manual. Further, they claimed that the preflexion test is not needed and that the upper torso return angle upon release of the bending force should be eliminated.

The commenters have not provided any factual support for the claim that flexion stiffness of the torso is not critical to the dummy's performance, and that the measurement of stiffness during the dummy's inspection is sufficient. They have argued that the SAE user's manual lists this test as an ''inspection test'' which is supplemental to the calibration tests to ensure that a component meets its design intent. They note that inspection tests are performed by the dummy manufacturer on new parts, but that the dummy user may conduct inspection tests only after a part is damaged or replaced. The agency does not agree with the SAE assessment. The dummy's torso midsection provides an important coupling and transfer of loads between the upper and lower torso halves. The lumbar spine and the pelvis bone cavity control the confinement of the abdomen fit from the rear and the bottom of the torso. Thus, the bottom of the ribcage as it glides around and pushes on internal surfaces of the flesh has a substantial influence not only on the extent the torso will flex, but also on how the load transfer between the upper and lower torso halves will be distributed. By suggesting that we adopt the agency-developed, but SAE-interpreted test procedure contained in the SAE user's manual, the commenters have admitted its need and importance. We believe the flexion procedure is necessary as a calibration test to ensure that when the dummy is used, its torso flexion stiffness is consistent, provides consistent upper torso kinematics relative to the lower torso, and does not cause the variability of dummy response measurements in other body segments. A procedure relegated to an inspection category would be nearly useless for these purposes, since if the dummy was not tested prior to the compliance test, it would never be known if the dummy had the correct mid-section stiffness and if the responses of the other body segments were not affected by mid-section variability.

We also disagree with the suggestion that the return angle during the bending stiffness test of the lumbar spine/upper torso assembly is not needed. There will be a substantial difference in overall torso kinematics between a seated dummy that can and a seated dummy that cannot return its upper torso half from a flexed position to an upright posture, particularly after full flexion has occurred. Without return, the flexion is substantially plastic, while evidence of a specific return would be indicative of the torso mid-section having certain elastic properties. Also, evidence of consistent return would indicate that the forces of restitution are intact, while no or indefinite return would indicate a substantial change within the internal mechanisms of the mid-torso structure, such as failure of the lumbar spine, abdomen, or a substantial shift between interfacing body segments within the abdominal cavity. Analysis of all of the test results indicate that the upper torso returns consistently within 8 degrees of the starting position, indicating the necessity of specifying the return angle.

The commenters also suggested removal of the preflex provision, claiming such a provision is not needed and would interfere with the waiting time between tests recommended in the SAE user's manual. A preflex provision was proposed to provide an opportunity for the mating parts to inter-align between themselves, so that the internal structures within the dummy's mid-torso are not sprung or misaligned at the time of testing. Preflexing was performed in the agency tests, and it is working reasonably well in developing a stabilized set-up posture. We see no reason to remove a provision that helps to assure a stabilized posture and better and more consistent measurements, including the integrity of the interconnection between the upper and the lower torso halves. In response to FTSS' comments about excessive flexing angle of the torso for stabilization purposes, the proposed provision for flexing the torso 3 times by 40 degrees from its initial upright position is being reduced to a nominal 30 degrees. The agency found 30 degrees of flexion sufficient to achieve stabilized interalignment of parts within the dummy's abdominal area.

The agency proposed knee assembly impact tests using a ballistic test probe for impacts. AAMA and TRW recommended that the knee impact test should be an inspection test, instead of a calibration test. AAMA also argued that only an inspection test is needed since femur loads are almost never measured.

The NPRM proposed knee assembly calibration tests using a cylindrical probe for impacts. AAMA and TRW noted that the proposed knee impact calibration test is identical to the inspection test in the SAE H–III6C user's manual. AAMA stated that ''this test is included in the SAE user's manual as an inspection test since femur loads are almost never measured with the dummy. However, if femur loads are measured, the test should be run periodically as a calibration test.'' TRW noted that inspection tests are supplemental to the calibration tests, arguing they should be used only to ensure that a component meets the design intent. TRW stated that it believes that knee impact tests fall within the inspection description.

The agency proposed incorporating this dummy into Part 572 with the intent of it being used for all types of crash test and restraint conditions including those in which knee impact is involved. In most test conditions, it is not known ''a priori'' that knee impacts will or will not occur. Any test that is being conducted with this test dummy should consider the possibility of knee impact. Accordingly, knee calibration even by AAMA–TRW's criteria is necessary. Thus, we disagree with AAMA and TRW's support of the SAE position that a calibration test is not needed if a part in question is not impacted. Calibration tests are also needed to ensure that the knee linking the femur with the tibia is properly connected. Such tests assure that the connection is not a source of noise and spikes in other measurements within the dummy.

The impact probes specified by the NPRM for knee and thorax tests are meant to be ideally cylindrical in shape and of a certain diameter. TRC noted that this type of test probe description in the NPRM unnecessarily restricts the design of the probe and puts additional burden on test laboratories. TRC prefers the wording used in current drafts of the SAE user's manuals. That wording was chosen by committee consensus to allow a wide range of design options without affecting impact results. In the case of the SAE H–III6C manual, TRC claims, the wording for the knee probe is more correct and preferred.

Up to now, all of the agency-specified dummy impact probes have been defined as rigid body cylinders of a specified diameter. Similarly, most SAE user's manuals, which are patterned after the agency's test procedures, also specify cylindrical impact probes, although in practice such probes may

not be perfectly cylindrical. The addition of several new dummies to 49 CFR Part 572 may make it necessary for some dummy calibration laboratories to equip the existing test facilities with a variety of new impact probes. Some of those probes may be difficult to design in a pure cylindrical form due to their low weight.

We agree that more latitude in the selection of impact probes will allow the various laboratories greater flexibility in the use of existing impactors and/or in developing new ones. At the same time, it is essential that alternate impact probes do not create problems such as imprecision in the geometry of the impact face which could lead to inappropriate interface with dummy components during impact, introduction of vibratory effects due to potential resonances, inter-mass impacts within the impactor, and kinematic differences due shape and mass moment of inertia differences. Similarly, the measurement of impact force must be sensed by an accelerometer in a location whose signal is not distorted by the rigidity and geometry of the structures on which it is mounted. It is also noted that while the current specification for impactors defines the general shape of the impactor that the agency intends to use, that specification does not prohibit any test facility to use an impactor of its choice, as long as the user is confident that the alternate impactor will generate the same results under identical test conditions.

While the agency believes that, for the sake of consistency and simplicity, it would be best if all impact probes for dummy testing were of cylindrical design as defined in the NPRM, we have redefined the impact probes in generic terms and will accept other impactor configurations for compliance purposes, as long as they have the same (1) mass, (2) impact surface configuration, (3) defined mass moment of inertia in yaw and pitch with respect to the principal axis, (4) structural integrity, (5) an identically aligned accelerometer on the rear face of the impactor, (6) free air resonant frequency of not less than 1000 Hz, and (7) functionality and freedom of interference with the dummy's other body segments during the impact.

V. Calibration Response Corridors

The agency proposed calibration corridors for the head, neck flexion/extension, thorax resistive force and deflection, knee load and torso-flexion. Mitsubishi was concerned about the mass effects of the load adapter bracket on the test results. Comments on the response corridors were received from the following organizations: TRC, AAMA, and TRW. AAMA, by endorsing the SAE/DTESC User's Manual of October 98, indirectly commented on the response corridors for the head. During the agency's data analysis process, we contacted AAMA and SAE DTESC for further details and clarification of the basis of their recommendation. All comments are discussed in the TAIR–H–III6C.

We proposed calibration corridors for the head, neck flexion/extension, thorax resistive force and deflection, knee load and torso-flexion.

None of the commenters objected to the proposed head response corridors of 245 G to 300 G. AAMA, by endorsing the SAE/DTESC User's Manual of October 1998, indirectly agreed with the proposed response corridors for the head. Accordingly, the 245 G's to 300 G's impact response corridor is retained in the Final Rule as proposed in the NPRM.

We proposed neck response corridors in flexion in terms of neck moments, maximum head flexion-rotation angle, and moment decay time. For flexion, we specified a head displacement-rotation range from 74–92 degrees, a peak moment of 27 N-m to 33 N-m (19.9–24.3 ft-lbf), and a positive moment decay for the first 5 N-m (3.7 ft-lbf) between 103 and 123 ms after time-zero. The SAE Engineering Aid 29 of October 1998, which is referenced in AAMA and TRW responses, shows agreement with all of the NPRM proposed neck flexion corridors. Accordingly, the final rule retains the calibration corridors as proposed in the NPRM.

The agency proposed neck response corridors in extension in terms of neck moments, maximum head extension-rotation angle, and moment decay time. For extension, we specified a head displacement rotation range from 94–106 degrees, a peak moment of −19 N-m to −24 N-m (−14.7 to −17 ft-lbf), and a negative moment decay for the first −5 N-m (−3.7 ft-lbf) between 127 and 143 ms after time-zero. TRC, TRW and AAMA recommended a corridor of 85–103 degrees for neck rotation, a corridor of −20 to −25 N-m for peak moment, and, for moment decay time, a corridor of 123–143 ms after time zero as a more reasonable fit to the existing data base, apparently based on the SAE Engineering Aid 29, October 1998. AAMA also noted that the method of defining neck moment and time corridors proposed in the NPRM is acceptable because it produces more consistent results.

Upon review of the substantial neck extension data submitted in comments, we reevaluated the proposed corridors and found a substantial degree of agreement with the commenters' recommendations for revising the head rotation and decay time, but not for the peak moment corridors. Accordingly, we have revised the neck extension corridor to a maximum head rotation of 85–103 degrees, and the decay time corridor to 123–147 ms value. We have retained the peak moment at −19 N-m to −24 N-m (−14 to −17 ft-lbf) as proposed in the NPRM.

The agency proposed thorax impact response corridors in terms of sternum to spine compression at 38–44 mm (1.5–1.77 in) and peak force at 1150 N to 1300 N (259–292 lbf). AAMA, TRC, and TRW urged the agency to accept the 38–46 mm compression corridor contained in SAE Engineering Aid 29, October 1998. AAMA and TRW urged the adoption of the peak force resistance corridor of 1,180 N to 1,380 N, while TRC argued for a peak force corridor of 1,200 N to 1,400 N. Additionally, AAMA preferred the wording contained in the agency Technical Report "* * * to specify the maximum force within the compression corridor* * *".

Based on examination of NHTSA's and the SAE-furnished data bases, the agency concluded that the existing data supported the resetting of thorax compression corridor between 38–46 mm (1.5–1.8 in) and the force response between 1150 N –1380 N (259–310 lbf). We also decided to change the wording of the regulatory text in accordance with the AAMA's suggestion. Thus, we have changed the wording in S572.124(b)(1) from "During the displacement interval* * *" to "Within the specified compression corridor* * *".

The AAMA expressed concern over the torso flexion test and the knee response. TRW expressed concern over the knee response as well. During the data analysis process, we contacted AAMA and SAE DTESC for further details and clarification of their recommendations for modifying the torso flexion and knee impact response corridors.

In the NPRM, the agency proposed a semi-static torso bending stiffness value of 147–200 N (33–45 lbf). While initial comments by AAMA noted that the SAE Engineering Aid 29 of August 1998 supported a torso bending stiffness value between 156 N (35 lbf) and 200 N (45 lbf), subsequent SAE User Manual versions agreed with the agency proposed value of 147–200 N (33–45 lbf). Accordingly, the torso flexion force values are retained in the regulatory text at 147–200 N (33–45 lbf). Similarly, since there was no disagreement on internal hystersis of the ribcage, the

proposed range of 65 percent to 85 percent is retained for the final rule.

The NPRM proposed a knee impact response corridor of 1,800–N to 2,800–N (405–629 lbf). AAMA and TRW recommended a corridor between 2,000–N and 3,000–N (450–674 lbf) as called for in the SAE Engineering Aid 29 of October 1998. Upon receipt of comments and supplemental data from the SAE DTESC, we recomputed the response corridor. The resultant average values were found to be very close to the proposed SAE mean of 2,500 N (2,469 ± 511 N (1 sigma limit) for the left knee and 2,480 ± 481 N (1 sigma limit) for the right knee). Accordingly, the knee impact response corridors have been adjusted to the 2,500 ± 500 N (562 ± 112 lbf) range, as recommended by AAMA and TRW.

VI. Instrumentation (Accelerometers and Loads Cells)

In the NPRM, the agency proposed for the first time ''generic'' specifications for dummy-based sensors. The generic specifications apply to the following sensors: (1) The accelerometer (SA572–S4), (2) force and moment transducers for upper neck (SA572–S11) and lower neck (SA572–S26), lumbar spine (SA572–S12), anterior-superior iliac spine load cell (SA572–S13), single axis femur load cell (SA572–S10), and (3) the thorax based chest deflection potentiometer (SA572–S50). Of the 19 comments received, only three addressed the generic specifications for transducers. They were: Robert A. Denton, Inc, Entran, Inc., and AAMA. A full discussion of comments can be found in the TAIR–H–III6C.

After analyzing the comments received, we have concluded that generic specifications for the transducers or sensors used in crash test dummies can be defined sufficiently and will provide a broader latitude for the user industry to select suitable sensors. The input from these comments is being incorporated into generic sensor specifications in the regulatory text.

VII. Biofidelity, Pressure Distribution and Occupant Sensing Capability

The agency noted in the NPRM preamble that the proposed H–III6C dummy incorporates improved biofidelity and extended measurement capability. Because of this capability, the dummy can be used to evaluate the safety of children in a much wider array of environments than the Subpart I 6-year-old dummy, including assessing the effects of air bag deployment on out-of-position children. Comments were received from American Academy of Pediatrics (AAP), Advocates for Auto Safety (AAS), and International Electronics Engineering (IEE). AAP, AAS and Volvo endorse the greater biofidelity of the H–III6C dummy without reservations. Only IEE said there was a need to improve the dummy's proximity sensing and the pressure profile of the seated dummy's buttocks.

Biofidelity is a desirable and useful feature of this dummy which, because of the extended measuring capability, is endorsed by the commenters, particularly for its usefulness in evaluating child safety in the air bag environment. However, the IEE request for redesign of the dummy buttocks and for proximity sensing are technically premature and beyond the scope of this rulemaking.

IEE's comment about proximity sensing and the pressure profile a seated dummy's buttocks would be relevant if the agency were to decide that occupant sensing is needed along the lines suggested by IEE. However, this dummy in its original design was not intended to have such sensing and pressure profile capabilities. The development of such capabilities are still in early stages of research and considerably more research, testing and evaluation will need to be done before such technologies mature and become acceptable for safety certification activities. Nevertheless, IEE's comment is acknowledged as grounds for possible future research and development.

VIII. User's Manual—Procedures for Assembly, Disassembly and Inspection (PADI)

The NPRM noted in sections 572.120(a)(2) and 572.121(b) that the final rule package will contain a ''User's Manual for the Hybrid III 6-year-old Dummy.'' Responding to the NPRM, Volvo recommended and DTES requested that the agency incorporate the SAE User's Manual by reference in the final rule. We acknowledge the DTES'' contribution toward clarifying several assembly and disassembly issues and in illustrating the importance of this document through their diligent development efforts. NHTSA commends the DTES for their participation and contribution, and encourages the manual's further development as the test data begins to surface in larger volumes from its application in the field. Nevertheless, we have decided against incorporating the manual into Part 572.

During initial dummy assessment stages, the agency had to establish methods for an initial dummy inspection. Additionally, part of the agency test protocol was based on a Draft SAE User's Manual of May 27, 1997. Subsequent to the issuance of the NPRM, the SAE provided several user manual draft revisions in August, October and December 1998. Each of them consisted basically of two parts: inspection and calibration. Each of the User Manuals varied to some extent in the way inspection and calibration procedures and norms were formulated.

The December 1998 SAE User's Manual draft shows it to be a reasonably well-developed document that is well suited for research use. However, because of redundancies, ambiguities, and in some areas a lack of objectivity, it is far less suitable for regulation and compliance purposes. If employed in its present form, it could become a source of different interpretations and misunderstandings, and as a result create difficulties for both the agency and dummy users in enforcement and compliance certification programs. Also, the SAE User's Manual is copyrighted by both SAE and FTSS. Until the copyright status of the document is resolved, its usefulness as a reference document would be highly limited, particularly for publication by the agency through the electronic media. Further, the recommended DTES User's Manual includes both inspection and calibration procedures, while the agency format provides only an inspection document involving the dummy's initial conformance to dimensional mass and fit-for-assembly specifications, as well as objective assembly and disassembly procedures.

For these reasons, NHTSA has decided against adopting the SAE user's manual and has developed a publication, ''Procedures for Assembly, Disassembly, and Inspection (PADI) of the Hybrid III 6-year-old Child Crash Test Dummy, Alpha version'' (August, 1999) [3] for the following reasons:

- The agency-developed procedure for disassembly, assembly and inspection provide unambiguous, direct and straightforward instructions;
- The document references only essential drawings based on the final rule parts list;
- Important and detailed photographic views are included to facilitate the assembly-disassembly process, including the mounting of generic instrumentation;
- It provides specific information for calibration laboratories, particularly useful for disassembly of any single

[3] NHTSA believes that the name ''user's manual'' for this document is a misnomer given its intended purpose. As the name implies, the user's manual should provide instructions on how to use the dummy, rather than how to inspect it and perform its assembly/disassembly.

major component, determination of instrumentation polarity, and the measurement of impactor moment of inertia;

- It uniquely provides recommendations for cable and connector routing and attachment based on lessons learned in the agency test program;
- It includes important torque specifications for all fasteners used in the dummy;
- It supports all elements of the final rule and will facilitate the dummy's use in agency required testing activities; and
- Its publication and copying are not hampered by copyright claims.

IX. Dummy Availability

At the issuance of the NPRM, the agency noted that only one manufacturer (FTSS) was producing the H–III6C dummy. Although the dummy has been available for several years, its use has been limited primarily to research applications. Mitsubishi commented that it did not have sufficient time to evaluate the proposed dummy and could not offer extensive comments.

Numerous organizations possessed the Hybrid III 6-year-old type dummy when the NPRM was published. Additionally, over a year has passed since the issuance of the NPRM. During this time, all interested parties have had ample time to procure and evaluate the dummy and provide additional comments. The agency expressly invites and routinely considers all comments submitted outside of the comment period, but prior to arriving at a final agency position. Also, during this period, considerable further discussions have taken place at the SAE DTES regarding adequacy of this dummy in calibration and test applications. Interested parties have had sufficient opportunity to avail themselves of the information that is contained in the minutes of those meetings. Inasmuch as no other comments were received regarding the availability of the dummy, it is assumed that Mitsubishi as well as others were satisfied with the dummy as proposed in the NPRM.

X. Other Issues

The NPRM proposed that conformance of the dummy's structural properties would be checked before and after any compliance testing. When we published the NPRM for the Hybrid III 5th percentile adult small female dummy on September 3, 1998, 63 FR 46981, we decided to specify that the dummy conform to this part in every respect before its use in any test, but not after. The NPRMs for the Hybrid III 3-year-old child test dummy (64 FR 4385, January 28, 1999) and the 12-month-old infant dummy (CRABI) (64 FR 10965, March 8, 1999) proposed the same specification as the one proposed for the small adult female dummy. A full explanation of the agency's rationale can be found in the NPRM for the small adult female dummy. The agency rationale for the change in when to check for structural conformance is as applicable for the H–III6C as it is for the other dummies. Accordingly, section 572.121(c) has been changed to adopt the language used in the NPRMs for the other pending dummy rulemakings.

Regulatory Analyses and Notices

Executive Order 12866 and DOT Regulatory Policies and Procedures

Executive Order 12866, ''Regulatory Planning and Review'' (58 FR 51735, October 4, 1993), provides for making determinations whether a regulatory action is ''significant'' and therefore subject to Office of Management and Budget (OMB) review and to the requirements of the Executive Order. The Order defines a ''significant regulatory action'' as one that is likely to result in a rule that may:

(1) Have an annual effect on the economy of $100 million or more or adversely affect in a material way the economy, a sector of the economy, productivity, competition, jobs, the environment, public health or safety, or State, local, or Tribal governments or communities;

(2) Create a serious inconsistency or otherwise interfere with an action taken or planned by another agency;

(3) Materially alter the budgetary impact of entitlements, grants, user fees, or loan programs or the rights and obligations of recipients thereof; or

(4) Raise novel legal or policy issues arising out of legal mandates, the President's priorities, or the principles set forth in the Executive Order.

We have considered the impact of this rulemaking action under Executive Order 12866 and the Department of Transportation's regulatory policies and procedures. This rule is not considered a significant regulatory action under section 3(f) of the Executive Order 12866. Consequently, it was not reviewed by the Office of Management and Budget. This rulemaking document was not reviewed by the Office of Management and Budget under E.O. 12866, ''Regulatory Planning and Review.'' The rulemaking action is also not considered to be significant under the Department's Regulatory Policies and Procedures (44 FR 11034, February 26, 1979).

This document amends 49 CFR Part 572 by adding design and performance specifications for a new six-year-old child dummy which the agency may later separately propose for use in the Federal motor vehicle safety standards. This rule indirectly imposes requirements on only those businesses which choose to manufacture or test with the dummy, in that the agency will only use dummies for compliance testing that meet all of the criteria specified in this rule. It may indirectly affect vehicle and child seat manufacturers if it is incorporated by reference into the advanced air bag rulemaking or a future Child Seating Systems (FMVSS No. 213) rulemaking.

The cost of an uninstrumented H–III6C dummy is approximately $30,000. Instrumentation will add approximately $25,000 to $41,000 to the cost, depending on the number of data channels the user chooses to collect.

Because the economic impacts of this proposal are so minimal, no further regulatory evaluation is necessary.

Executive Order 13132

We have analyzed this rule in accordance with Executive Order 13132 (''Federalism''). We have determined that this rule does not have sufficient Federalism impacts to warrant the preparation of a federalism assessment.

Executive Order 13045

Executive Order 13045 (62 FR 19885, April 23, 1997) applies to any rule that: (1) is determined to be ''economically significant'' as defined under E.O. 12866, and (2) concerns an environmental, health or safety risk that NHTSA has reason to believe may have a disproportionate effect on children. If the regulatory action meets both criteria, we must evaluate the environmental health or safety effects of the planned rule on children, and explain why the planned regulation is preferable to other potentially effective and reasonably feasible alternatives considered by us.

This rule is not subject to the Executive Order because it is not economically significant as defined in E.O. 12866. It does indirectly involve decisions based on health risks that disproportionately affect children, namely, the risk of deploying air bags to children. However, this rulemaking serves to help vehicle and air bag manufacturers to take steps to reduce that risk.

Executive Order 12778

Pursuant to Executive Order 12778, ''Civil Justice Reform,'' we have considered whether this rule will have any retroactive effect. This rule does not

have any retroactive effect. A petition for reconsideration or other administrative proceeding will not be a prerequisite to an action seeking judicial review of this rule. This rule does not preempt the states from adopting laws or regulations on the same subject, except that it does preempt a state regulation that is in actual conflict with the federal regulation or makes compliance with the Federal regulation impossible or interferes with the implementation of the federal statute.

Regulatory Flexibility Act

Pursuant to the Regulatory Flexibility Act (5 U.S.C. 601 *et seq.*, as amended by the Small Business Regulatory Enforcement Fairness Act (SBREFA) of 1996) whenever an agency is required to publish a notice of rulemaking for any proposed or final rule, it must prepare and make available for public comment a regulatory flexibility analysis that describes the effect of the rule on small entities (*i.e.*, small businesses, small organizations, and small governmental jurisdictions). However, no regulatory flexibility analysis is required if the head of an agency certifies the rule will not have a significant economic impact on a substantial number of small entities. SBREFA amended the Regulatory Flexibility Act to require Federal agencies to provide a statement of the factual basis for certifying that a rule will not have a significant economic impact on a substantial number of small entities.

I have considered the effects of this rulemaking action under the Regulatory Flexibility Act (5 U.S.C. 601 *et seq.*) and certify that this proposal will not have a significant economic impact on a substantial number of small entities. The rule does not impose or rescind any requirements for anyone. The Regulatory Flexibility Act does not, therefore, require a regulatory flexibility analysis.

National Environmental Policy Act

We have analyzed this amendment for the purposes of the National Environmental Policy Act and determined that it will not have any significant impact on the quality of the human environment.

Paperwork Reduction Act

Under the Paperwork Reduction Act of 1995, a person is not required to respond to a collection of information by a Federal agency unless the collection displays a valid OMB control number. This rule does not propose any new information collection requirements.

National Technology Transfer and Advancement Act

Section 12(d) of the National Technology Transfer and Advancement Act of 1995 (NTTAA), Public Law 104–113, section 12(d) (15 U.S.C. 272) directs us to use voluntary consensus standards in its regulatory activities unless doing so would be inconsistent with applicable law or otherwise impractical. Voluntary consensus standards are technical standards (*e.g.*, materials specifications, test methods, sampling procedures, and business practices) that are developed or adopted by voluntary consensus standards bodies, such as the Society of Automotive Engineers (SAE). The NTTAA directs us to provide Congress, through OMB, explanations when we decide not to use available and applicable voluntary consensus standards.

The H-III6C dummy that is the subject of this document was developed under the auspices of the SAE. All relevant SAE standards were reviewed as part of the development process. The following voluntary consensus standards have been used in developing the dummy:

- SAE Recommended Practice J211–1995 Instrumentation for Impact Tests—Parts 1 and 2, dated March, 1995; and
- SAE J1733 Information Report, titled ''Sign Convention for Vehicle Crash Testing'', dated December 1994.

Unfunded Mandates Reform Act

Section 202 of the Unfunded Mandates Reform Act of 1995 (UMRA) requires Federal agencies to prepare a written assessment of the costs, benefits and other effects of proposed or final rules that include a Federal mandate likely to result in the expenditure by State, local or tribal governments, in the aggregate, or by the private sector, of more than $100 million in any one year (adjusted for inflation with base year of 1995). Before promulgating a NHTSA rule for which a written statement is needed, section 205 of the UMRA generally requires us to identify and consider a reasonable number of regulatory alternatives and adopt the least costly, most cost-effective or least burdensome alternative that achieves the objectives of the rule. The provisions of section 205 do not apply when they are inconsistent with applicable law. Moreover, section 205 allows us to adopt an alternative other than the least costly, most cost-effective or least burdensome alternative if we publish with the final rule an explanation why that alternative was not adopted.

This rule does not impose any unfunded mandates under the Unfunded Mandates Reform Act of 1995. This rule does not meet the definition of a Federal mandate because it does not impose requirements on anyone. Further, it will not result in costs of $100 million or more to either State, local, or tribal governments, in the aggregate, or to the private sector. Thus, this rule is not subject to the requirements of sections 202 and 205 of the UMRA.

Regulation Identifier Number (RIN)

The Department of Transportation assigns a regulation identifier number (RIN) to each regulatory action listed in the Unified Agenda of Federal Regulations. The Regulatory Information Service Center publishes the Unified Agenda in April and October of each year. You may use the RIN contained in the heading at the beginning of this document to find this action in the Unified Agenda.

List of Subjects in 49 CFR Part 572

Incorporation by reference. Motor vehicle safety.

In consideration of the foregoing, NHTSA amends 49 CFR part 572 as follows:

PART 572—ANTHROPOMORPHIC TEST DEVICES

1. The authority citation for part 572 continues to read as follows:

Authority: 49 U.S.C. 322, 30111, 30115, 30117 and 30166; delegation of authority at 49 CFR 1.50.

2. 49 CFR part 572 is amended by adding a new subpart N consisting of §§ 572.120–572.127 to read as follows:

Subpart N—Six-year-old Child Test Dummy, Alpha Version

Sec.
572.120 Incorporation by reference.
572.121 General description.
572.122 Head assembly and test procedure.
572.123 Neck assembly and test procedure.
572.124 Thorax assembly and test procedure.
572.125 Upper and lower torso assemblies and torso flexion test procedure.
572.126 Knees and knee impact test procedure.
572.127 Test conditions and instrumentation.

Subpart N—Six-year-old Child Test Dummy, Alpha Version

§ 572.120 Incorporation by reference.

(a) The following materials are hereby incorporated into this subpart by reference:

(1) A drawings and inspection package entitled ''Drawings and Specifications for the Hybrid III 6-year-

old Dummy (August 1999)'', consisting of:

(i) Drawing No. 127–1000, Head Assembly,

(ii) Drawing No. 127–1015, Neck Assembly,

(iii) Drawing No. 127–2000, Upper Torso Assembly,

(iv) Drawing No. 127–3000, Lower Torso Assembly,

(v) Drawing No. 127–4000, Leg Assembly,

(vi) Drawing No. 127–5000, Arm Assembly, and

(vii) The Hybrid III Six-year-old Parts List.

(2) A procedures manual entitled ''Procedures for Assembly, Disassembly, and Inspection (PADI) of the Hybrid III 6-year-old Child Crash Test Dummy, Alpha Version (August 1999)'';

(3) SAE Recommended Practice J211–1995 Instrumentation for Impact Tests—Parts 1 and 2, dated March, 1995'';

(4) SAE J1733 Information Report, titled ''Sign Convention for Vehicle Crash Testing'', dated December 1994.

(b) The Director of the Federal Register approved those materials incorporated by reference in accordance with 5 U.S.C. 552(a) and 1 CFR part 51. Copies of the materials may be inspected at NHTSA's Technical Reference Library, 400 Seventh Street S.W., room 5109, Washington, DC, or at the Office of the Federal Register, 800 North Capitol Street, NW, Suite 700, Washington, DC.

(c) The incorporated materials are available as follows:

(1) The Drawings and Specifications for the Hybrid III 6-year-old Dummy (August 1999) referred to in paragraph (a)(1) of this section and the Procedures for Assembly, Disassembly, and Inspection (PADI) of the Hybrid III 6-year-old Child Crash Test Dummy, Alpha Version (August 1999) referred to in paragraph (a)(2) of this section, are available from Reprographic Technologies, 9000 Virginia Manor Road, Beltsville, MD 20705 (301) 419–5070.

(2) The SAE materials referred to in paragraphs (a)(3) and (a)(4) of this section are available from the Society of Automotive Engineers, Inc., 400 Commonwealth Drive, Warrendale, PA 15096.

§ 572.121 General description.

(a) The Hybrid III type 6-year-old dummy is defined by drawings and specifications containing the following materials:

(1) Technical drawings and specifications package P/N 127–0000, the titles of which are listed in Table A;

(2) Procedures for Assembly, Disassembly, and Inspection (PADI) of the Hybrid III 6-year-old test dummy, Alpha version (August 1999).

TABLE A

Component assembly	Drawing number
Head assembly	127–1000
Neck assembly	127–1015
Upper torso assembly	127–2000
Lower torso assembly	127–3000
Leg assembly	127–4000
Arm assembly	127–5000

(b) Adjacent segments are joined in a manner such that except for contacts existing under static conditions, there is no contact between metallic elements throughout the range of motion or under simulated crash impact conditions.

(c) The structural properties of the dummy are such that the dummy must conform to this Subpart in every respect before use in any test similar to those specified in Standard 208, ''Occupant Crash Protection'', and Standard 213, ''Child Restraint Systems''.

§ 572.122 Head assembly and test procedure

(a) The head assembly for this test consists of the complete head (drawing 127–1000), a six-axis neck transducer (drawing SA572–S11) or its structural replacement (drawing 78051–383X), a head to neck-to-pivot pin (drawing 78051–339), and 3 accelerometers (drawing SA572–S4).

(b) When the head assembly in paragraph (a) of this section is dropped from a height of 376.0 ± 1.0 mm (14.8 ± 0.04 in) in accordance with paragraph (c) of this section, the peak resultant acceleration at the location of the accelerometers at the head CG may not be less than 245 G or more than 300 G. The resultant acceleration vs. time history curve shall be unimodal; oscillations occurring after the main pulse must be less than 10 percent of the peak resultant acceleration. The lateral acceleration shall not exceed 15 g's (zero to peak).

(c) *Head test procedure.* The test procedure for the head is as follows:

(1) Soak the head assembly in a controlled environment at any temperature between 18.9 and 25.6 °C (66 and 78 °F) and a relative humidity from 10 to 70 percent for at least four hours prior to a test.

(2) Prior to the test, clean the impact surface of the skin and the impact plate surface with isopropyl alcohol, trichloroethane, or an equivalent. The skin of the head must be clean and dry for testing.

(3) Suspend the head assembly as shown in Figure N1. The lowest point on the forehead must be 376.0 ± 1.0 mm (14.8 ± 0.04 in) from the impact surface and the head must be oriented to an incline of 62 ± 1 deg. between the ''D'' plane as shown in Figure N1 and the plane of the impact surface. The 1.57 mm (0.062 in) diameter holes located on either side of the dummy's head shall be used to ensure that the head is level with respect to the impact surface.

(4) Drop the head assembly from the specified height by means that ensure a smooth, instant release onto a rigidly supported flat horizontal steel plate which is 50.8 mm (2 in) thick and 610 mm (24 in) square. The impact surface shall be clean, dry and have a micro finish of not less than $203.2. \times 10^{-6}$ mm (8 micro inches) (RMS) and not more than 2032.0×10^{-6} mm (80 micro inches) (RMS).

(5) Allow at least 2 hours between successive tests on the same head.

§ 572.123 Neck assembly and test procedure.

(a) The neck assembly for the purposes of this test consists of the assembly of components shown in drawing 127–1015.

(b) When the head-neck assembly consisting of the head (drawing 127–1000), neck (drawing 127–1015), pivot pin (drawing 78051–339), bib simulator (drawing TE127–1025, neck bracket assembly (drawing 127–8221), six-axis neck transducer (drawing SA572–S11), neck mounting adaptor (drawing TE–2208–001), and three accelerometers (drawing SA572–S4) installed in the head assembly as specified in § 572.122, is tested according to the test procedure in paragraph (c) of this section, it shall have the following characteristics:

(1) *Flexion.* (i) Plane D, referenced in Figure N2, shall rotate in the direction of preimpact flight with respect to the pendulum's longitudinal centerline between 74 degrees and 92 degrees. Within this specified rotation corridor, the peak moment about the occipital condyles shall be not less than 27 N-m (19.9 ft-lbf) and not more than 33 N-m (24.3 ft-lbf).

(ii) The positive moment shall decay for the first time to 5 N-m (3.7 ft-lbf) between 103 ms and 123 ms.

(iii) The moment shall be calculated by the following formula: Moment (N-m) = $M_y - (0.01778m) \times (F_X)$.

(iv) M_y is the moment about the y-axis and F_X is the shear force measured by the neck transducer (drawing SA572–S11) and 0.01778m is the distance from force to occipital condyle.

(2) *Extension.* (i) Plane D, referenced in Figure N3, shall rotate in the direction of preimpact flight with respect to the pendulum's longitudinal

centerline between 85 degrees and 103 degrees. Within this specified rotation corridor, the peak moment about the occipital condyles shall be not more than −19 N-m (−14 ft-lbf) and not less than −24 N-m (−17.7ft-lbf).

(ii) The negative moment shall decay for the first time to −5 N-m (−3.7 ft-lbf) between 123 ms and 147 ms.

(iii) The moment shall be calculated by the following formula: Moment (N-m) = M_y—(0.01778m) x (F_X).

(iv) M_y is the moment about the y-axis and F_X is the shear force measured by the neck transducer (drawing SA572–S11) and 0.017778m is the distance from force to occipital condyle.

(3) Time-zero is defined as the time of initial contact between the pendulum striker plate and the honeycomb material.

(c) *Test procedure.* The test procedure for the neck assembly is as follows:

(1) Soak the neck assembly in a controlled environment at any temperature between 20.6 and 22.2 °C (69 and 72 °F) and a relative humidity between 10 and 70 percent for at least four hours prior to a test.

(2) Torque the jam nut (drawing 9000341) on the neck cable (drawing 127–1016) to 0.23 ± 0.02 N-m (2.0 ± 0.2 in-lbs).

(3) Mount the head-neck assembly, defined in paragraph (b) of this section, on the pendulum so the midsagittal plane of the head is vertical and coincides with the plane of motion of the pendulum as shown in Figure N2 for flexion tests and Figure N3 for extension tests.

(4) Release the pendulum and allow it to fall freely from a height to achieve an impact velocity of 4.95 ± 0.12 m/s (16.2 ± 0.4 ft/s) for flexion tests and 4.3 ± 0.12 m/s (14.10 ± 0.40 ft/s) for extension tests, measured by an accelerometer mounted on the pendulum as shown in Figure 22 of 49 CFR 572 at the instant of contact with the honey comb.

(i) Time-zero is defined as the time of initial contact between the pendulum striker plate and the honeycomb material. All data channels should be at the zero level at this time.

(ii) Stop the pendulum from the initial velocity with an acceleration vs. time pulse which meets the velocity change as specified below. Integrate the pendulum acceleration data channel to obtain the velocity vs. time curve:

TABLE B

Time	Pendulum pulse			
	Flexion		Extension	
ms	m/s	ft/s	m/s	ft/s
10	1.2–1.6	3.9–5.3	1.0–1.4	3.3–4.6
20	2.4–3.4	7.9–11.2	2.2–3.0	7.2–9.8
30	3.8–5.0	12.5–16.4	3.2–4.2	10.5–13.8

§ 572.124 Thorax assembly and test procedure.

(a) *Thorax (upper torso) assembly.* The thorax consists of the part of the torso assembly shown in drawing 127–2000.

(b) When the anterior surface of the thorax of a completely assembled dummy (drawing 127–0000) is impacted by a test probe conforming to section 572.127(a) at 6.71 ± 0.12 m/s (22.0 ± 0.4 ft/s) according to the test procedure in paragraph (c) of this section:

(1) The maximum sternum displacement (compression) relative to the spine, measured with chest deflection transducer (drawing SA572–S50), must be not less than 38.0 mm (1.50 in) and not more than 46.0 mm (1.80 in). Within this specified compression corridor, the peak force, measured by the probe in accordance with section 572.127, shall not be less than 1150 N (259 lbf) and not more than 1380 N (310 lbf). The peak force after 12.5 mm (0.5 in) of sternum displacement but before reaching the minimum required 38.0 mm (1.5 in) sternum displacement limit shall not exceed by more than 5% the value of the peak force measured within the required displacement limit.

(2) The internal hysteresis of the ribcage in each impact as determined by the plot of force vs. deflection in paragraph (b)(1) of this section shall be not less than 65 percent but not more than 85 percent.

(c) *Test procedure.* The test procedure for the thorax assembly is as follows:

(1) Soak the dummy in a controlled environment at any temperature between 20.6 and 22.2 °C (69 and 72 °F) and a relative humidity between 10 and 70 percent for at least four hours prior to a test.

(2) Seat and orient the dummy, wearing a light-weight cotton stretch short-sleeve shirt and above-the-knee pants, on a seating surface without back support as shown in Figure N4, with the limbs extended horizontally and forward, parallel to the midsagittal plane, the midsagittal plane vertical within ± 1 degree and the ribs level in the anterior-posterior and lateral directions within ± 0.5 degrees.

(3) Establish the impact point at the chest midsagittal plane so that the impact point of the longitudinal centerline of the probe coincides with the midsagittal plane of the dummy within ± 2.5 mm (0.1 in) and is 12.7 ± 1.1 mm (0.5 ± 0.04 in) below the horizontal-peripheral centerline of the No. 3 rib and is within 0.5 degrees of a horizontal line in the dummy's midsagittal plane.

(4) Impact the thorax with the test probe so that at the moment of contact the probe's longitudinal center line falls within 2 degrees of a horizontal line in the dummy's midsagittal plane.

(5) Guide the test probe during impact so that there is no significant lateral, vertical or rotational movement.

§ 572.125 Upper and lower torso assemblies and torso flexion test procedure.

(a) *Upper/lower torso assembly.* The test objective is to determine the stiffness effects of the lumbar spine (drawing 127–3002), including cable (drawing 127–8095), mounting plate insert (drawing 910420–048), nylon shoulder bushing (drawing 9001373), nut (drawing 9001336), and abdominal insert (drawing 127–8210), on resistance to articulation between upper torso assembly (drawing 127–2000) and lower torso assembly (drawing 127–3000).

(b)(1) When the upper torso assembly of a seated dummy is subjected to a force continuously applied at the head to neck pivot pin level through a rigidly attached adaptor bracket as shown in Figure N5 according to the test procedure set out in paragraph (c) of this section, the lumbar spine-abdomen assembly shall flex by an amount that permits the upper torso assembly to translate in angular motion until the machined rear surface of the instrument cavity at the back of the thoracic spine

box is at 45 ± 0.5 degrees relative to the vertical transverse plane, at which time the force applied as shown in Figure N5 must be not less than 147 N (33 lbf) and not more than 200 N (45 lbf), and

(2) Upon removal of the force, the torso assembly must return to within 8 degrees of its initial position.

(c) *Test procedure.* The test procedure for the torso assemblies is as follows:

(1) Soak the dummy in a controlled environment at any temperature between 18.9 and 25.6 °C (66 and 78 °F) and a relative humidity between 10 and 70 percent for at least four hours prior to a test.

(2) Attach the dummy (with or without the legs below the femurs) to the fixture in a seated posture as shown in Figure N5.

(3) Secure the pelvis at the pelvis instrument cavity rear face by threading four ¼ in cap screws into the available threaded attachment holes. Tighten the mountings so that the test material is rigidly affixed to the test fixture and the pelvic-lumbar joining surface is horizontal.

(4) Flex the thorax forward three times between vertical and until the torso reference plane, as shown in figure N5, reaches 30 ± 2 degrees from vertical. Bring the torso to vertical orientation, remove all externally applied flexion forces, and wait 30 minutes before conducting the test. During the 30-minute waiting period, the dummy's upper torso shall be externally supported at or near its vertical orientation to prevent sagging.

(5) Remove the external support and wait two minutes. Measure the initial orientation of the torso reference plane of the seated, unsupported dummy as shown in Figure N5. This initial torso orientation angle may not exceed 22 degrees.

(6) Attach the loading adapter bracket to the spine of the dummy, the pull cable, and the load cell as shown in Figure N5.

(7) Apply a tension force in the midsagittal plane to the pull cable as shown in Figure N5 at any upper torso deflection rate between 0.5 and 1.5 degrees per second, until the torso reference plane is at 45 ± 0.5 degrees of flexion relative to the vertical transverse plane as shown in Figure N5.

(8) Continue to apply a force sufficient to maintain 45 ± 0.5 degrees of flexion for 10 seconds, and record the highest applied force during the 10-second period.

(9) Release all force as rapidly as possible, and measure the return angle at 3 minutes or any time thereafter after the release.

§ 572.126 Knees and knee impact test procedure.

(a) *Knee assembly.* The knee assembly is part of the leg assembly (drawing 127–4000–1 and –2).

(b) When the knee assembly, consisting of knee machined (drawing 127–4013), knee flesh (drawing 127–4011), lower leg (drawing 127–4014), the foot assembly (drawing 127–4030–1 (left) and –2 (right)) and femur load transducer (drawing SA572–S10) or its structural replacement (drawing 127–4007) is tested according to the test procedure in section 572.127(c), the peak resistance force as measured with the test probe mounted accelerometer must be not less than 2.0 kN (450 lbf) and not more than 3.0 kN (625 lbf).

(c) *Test Procedure.* The test procedure for the knee assembly is as follows:

(1) Soak the knee assembly in a controlled environment at any temperature between 18.9 and 25.6 °C (66 and 78 °F) and a relative humidity from 10 to 70 percent for at least four hours prior to a test.

(2) Mount the test material and secure it to a rigid test fixture as shown in Figure N6. No contact is permitted between any part of the foot or tibia and any exterior surface.

(3) Align the test probe so that throughout its stroke and at contact with the knee it is within 2 degrees of horizontal and collinear with the longitudinal centerline of the femur.

(4) Guide the pendulum so that there is no significant lateral vertical or rotational movement at time-zero.

(5) The test probe velocity at the time of contact shall be 2.1 ± 0.03 m/s (6.9 # 0.1 ft/s).

§ 572.127 Test conditions and instrumentation.

(a) The test probe for thoracic impacts shall be of rigid metallic construction, concentric in shape, and symmetric about its longitudinal axis. It shall have a mass of 2.86 ± 0.02 kg (6.3 ± 0.05 lbs) and a minimum mass moment of inertia of 622 kg-cm^2 (0.55 lbs-in-sec^2) in yaw and pitch about the CG. ⅓ of the weight of the suspension cables and their attachments to the impact probe must be included in the calculation of mass, and such components may not exceed five percent of the total weight of the test probe. The impacting end of the probe, perpendicular to and concentric with the longitudinal axis, must be at least 12.7 mm (0.5 in) long, and have a flat, continuous, and non-deformable 101.6 ± 0.25 mm (4.00 ± 0.01 in) diameter face with a maximum edge radius of 12.7 mm (0.5 in). The probe's end opposite to the impact face must have provisions for mounting of an accelerometer with its sensitive axis collinear with the longitudinal axis of the probe. No concentric portions of the impact probe may exceed the diameter of the impact face. The impact probe shall have a free air resonant frequency of not less than 1000 Hz.

(b) The test probe for knee impacts shall be of rigid metallic construction, concentric in shape, and symmetric about its longitudinal axis. It shall have a mass of 0.82 ± 0.01 kg (1.8 ± 0.02 lbs) and a minimum mass moment of inertia of 34 kg-cm^2 (0.03 lbs-in-sec^2) in yaw and pitch about the CG. ⅓ of the weight of the suspension cables and their attachments to the impact probe must be included in the calculation of mass, and such components may not exceed five percent of the total weight of the test probe. The impacting end of the probe, perpendicular to and concentric with the longitudinal axis, must be at least 12.7 mm (0.5 in) long, and have a flat, continuous, and non-deformable 76.2 ± 0.2 mm (3.00 ± 0.01 in) diameter face with a maximum edge radius of 12.7 mm (0.5 in). The probe's end opposite to the impact face must have provisions for mounting an accelerometer with its sensitive axis collinear with the longitudinal axis of the probe. No concentric portions of the impact probe may exceed the diameter of the impact face. The impact probe must have a free air resonant frequency of not less than 1000 Hz.

(c) Head accelerometers shall have dimensions, response characteristics, and sensitive mass locations specified in drawing SA572–S4 and be mounted in the head as shown in drawing 127–0000 sheet 3.

(d) *Neck force/moment transducer.* (1) The upper neck force/moment transducer shall have the dimensions, response characteristics, and sensitive axis locations specified in drawing SA572–S11 and be mounted in the head-neck assembly as shown in drawing 127–0000 sheet 3.

(2) The optional lower neck force/moment transducer shall have the dimensions, response characteristics, and sensitive axis locations specified in drawing SA572–S26 and be mounted as shown in drawing 127–0000 sheet 3.

(e) The thorax accelerometers shall have the dimensions, response characteristics, and sensitive mass locations specified in drawing SA572–S4 and be mounted in the torso assembly in triaxial configuration at T4, and as optional instrumentation in uniaxial for- and-aft oriented configuration on the most anterior ends of ribs #1 and #6 and at the spine box at the levels of #1 and #6 ribs as shown in 127–0000 sheet 3.

(f) The chest deflection transducer shall have the dimensions and response characteristics specified in drawing SA572–S50 and be mounted in the upper torso assembly as shown in 127–0000 sheet 3.

(g) The optional lumbar spine force-moment transducer shall have the dimensions, response characteristics, and sensitive axis locations specified in drawing SA572–S12 and be mounted in the lower torso assembly as shown in drawing 127–0000 sheet 3 as a replacement for lumbar adaptor 127–3005.

(h) The optional iliac spine force transducers shall have the dimensions and response characteristics specified in drawing SA572–S13 and be mounted in the torso assembly as shown in drawing 127–0000 sheet 3 as a replacement for ASIS load cell 127–3015–1 (left) and −2 (right).

(i) The optional pelvis accelerometers shall have the dimensions, response characteristics, and sensitive mass locations specified in drawing SA572–S4 and be mounted in the torso assembly in triaxial configuration in the pelvis bone as shown in drawing 127–0000 sheet 3.

(j) The femur force transducer shall have the dimensions and response characteristics specified in drawing SA72–S10 and be mounted in the leg assembly as shown in drawing 127–0000 sheet 3.

(k) The outputs of acceleration and force-sensing devices installed in the dummy and in the test apparatus specified by this part must be recorded in individual data channels that conform to SAE Recommended Practice J211, Rev. Mar95 ''Instrumentation for lmpact Tests,'' except that the lumbar measurements are based on CFC 600, with channel classes as follows:

(1) Head acceleration—Class 1000

(2) Neck:

(i) Forces—Class 1000

(ii) Moments—Class 600

(iii) Pendulum acceleration—Class 180

(3) Thorax:

(i) Rib acceleration—Class 1000

(ii) Spine and pendulum accelerations—Class 180

(iii) Sternum deflection—Class 600

(4) Lumbar:

(i) Forces—Class 1000

(ii) Moments—Class 600

(iii) Flexion—Class 60 if data channel is used

(5) Pelvis accelerations—Class 1000

(6) Femur forces—Class 600

(l) Coordinate signs for instrumentation polarity shall conform to the Sign Convention For Vehicle Crash Testing, Surface Vehicle Information Report, SAE J1733, 1994–12.

(m) The mountings for sensing devices shall have no resonance frequency less than 3 times the frequency range of the applicable channel class.

(n) Limb joints must be set at one G, barely restraining the weight of the limb when it is extended horizontally. The force needed to move a limb segment shall not exceed 2G throughout the range of limb motion.

(o) Performance tests of the same component, segment, assembly, or fully assembled dummy shall be separated in time by period of not less than 30 minutes unless otherwise noted.

(p) Surfaces of dummy components may not be painted except as specified in this subpart or in drawings subtended by this subpart.

BILLING CODE 4910–59–P

Figures to Subpart N

Figure N 1

HEAD DROP TEST SET-UP SPECIFICATIONS

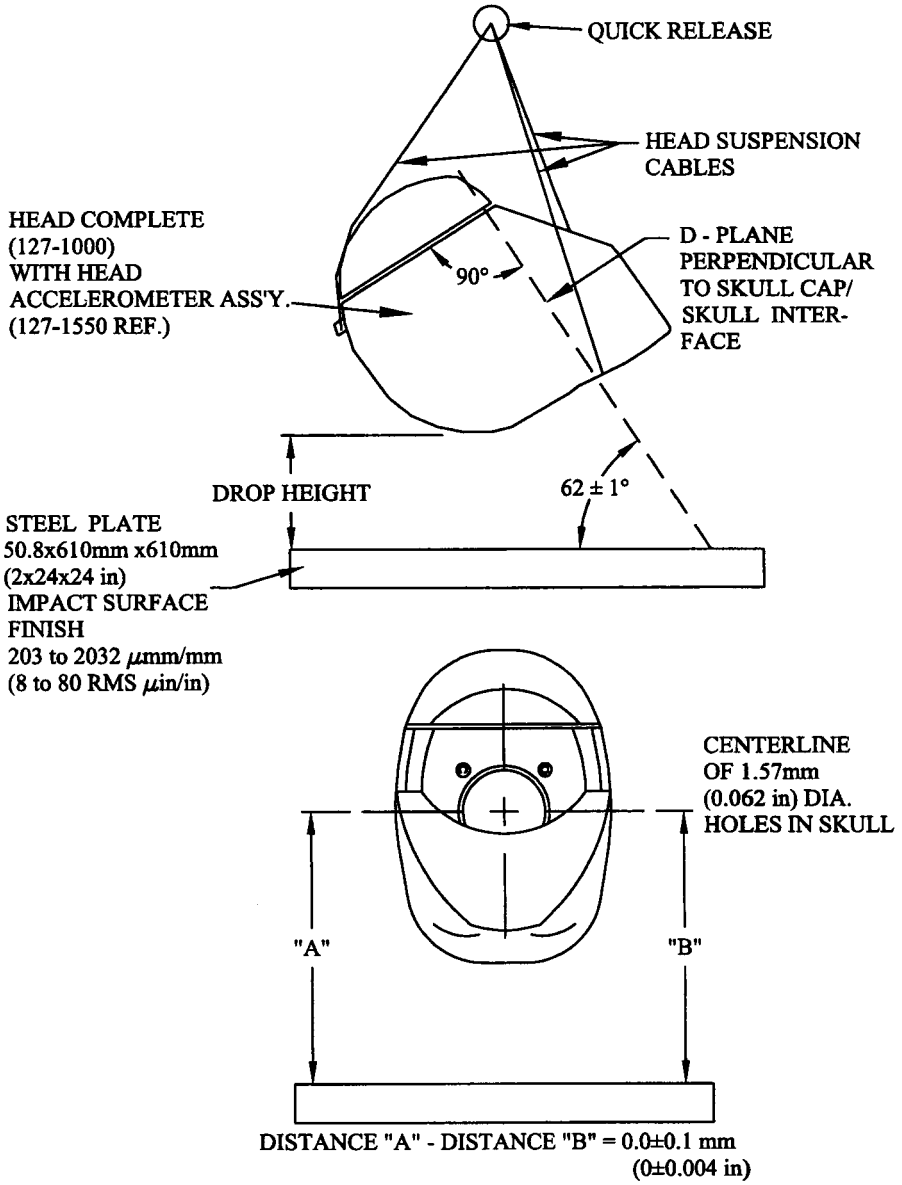

Figure N 2

NECK FLEXION TEST SET-UP SPECIFICATIONS

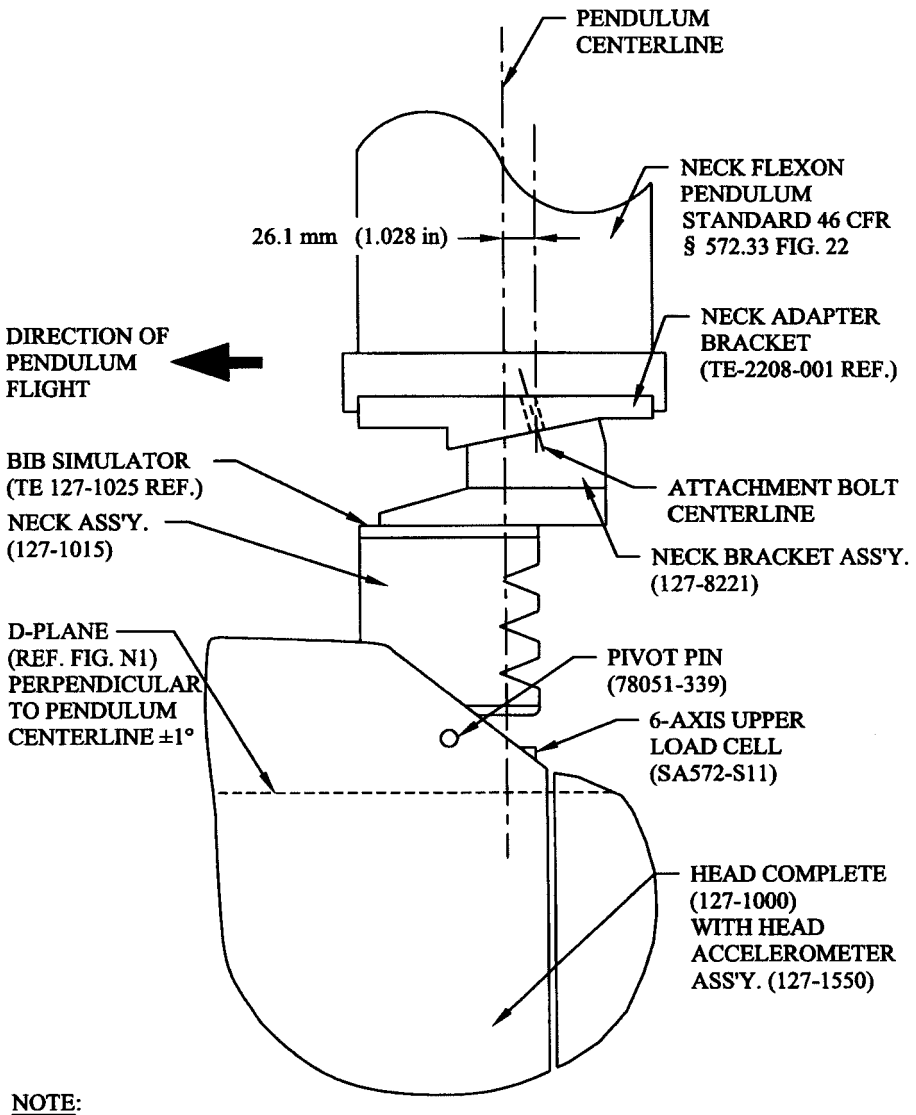

NOTE:
PENDULUM SHOWN IN VERTICAL ORIENTATION

Figure N 3

NECK EXTENSION TEST SET-UP SPECIFICATIONS

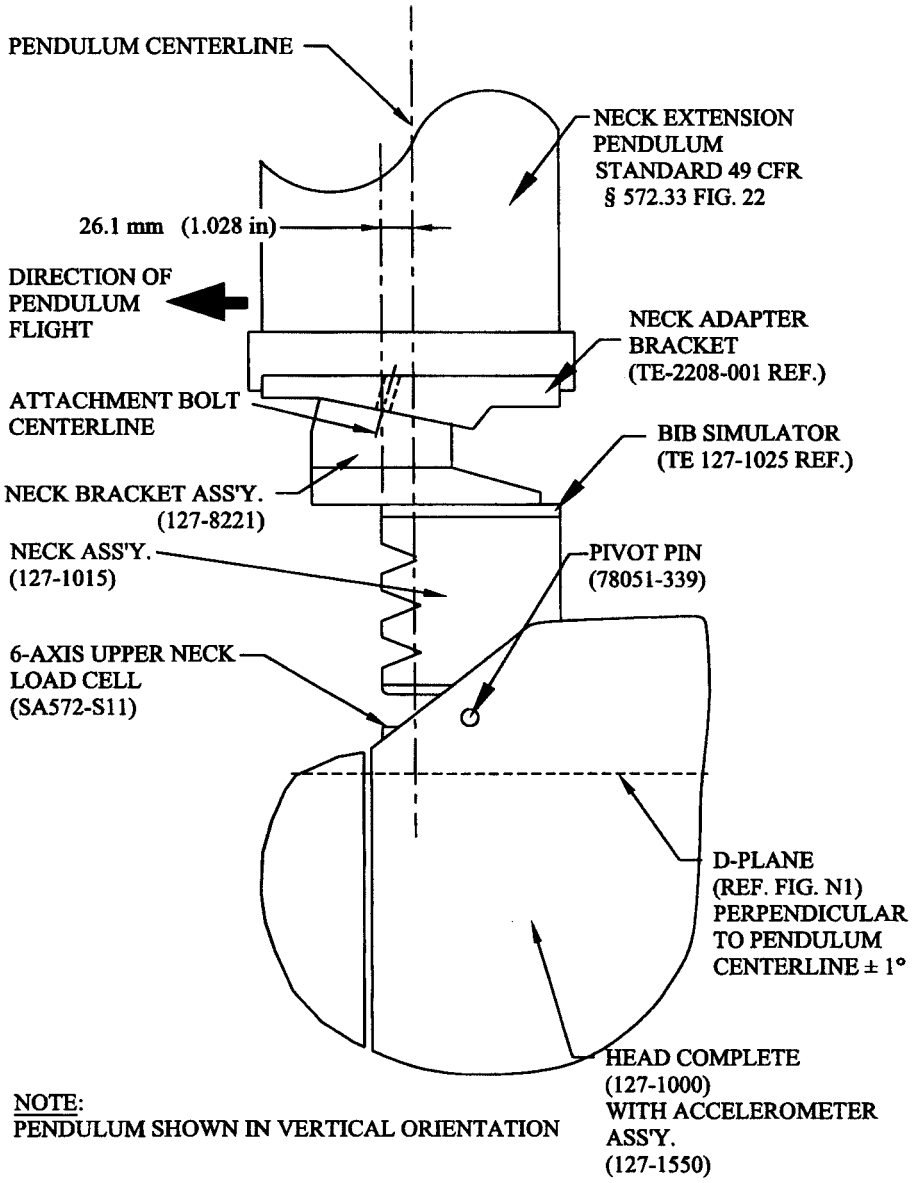

FIGURE N 4

THORAX IMPACT TEST SET-UP SPECIFICATIONS

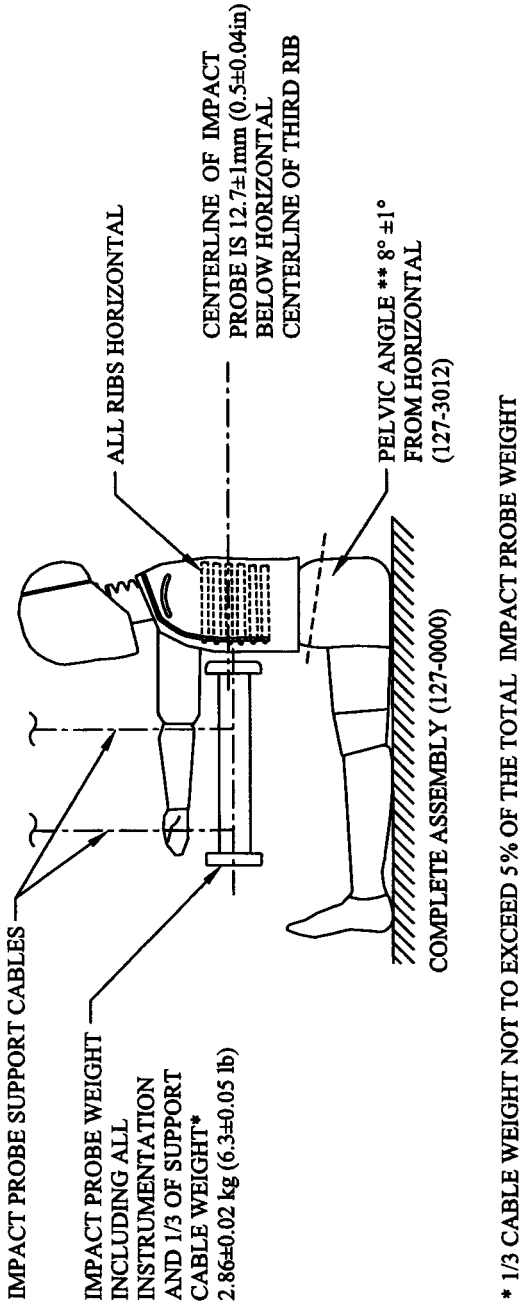

* 1/3 CABLE WEIGHT NOT TO EXCEED 5% OF THE TOTAL IMPACT PROBE WEIGHT
** PELVIS LUMBAR JOINING SURFACE

FIGURE N 5
TORSO FLEXION TEST SET-UP SPECIFICATIONS

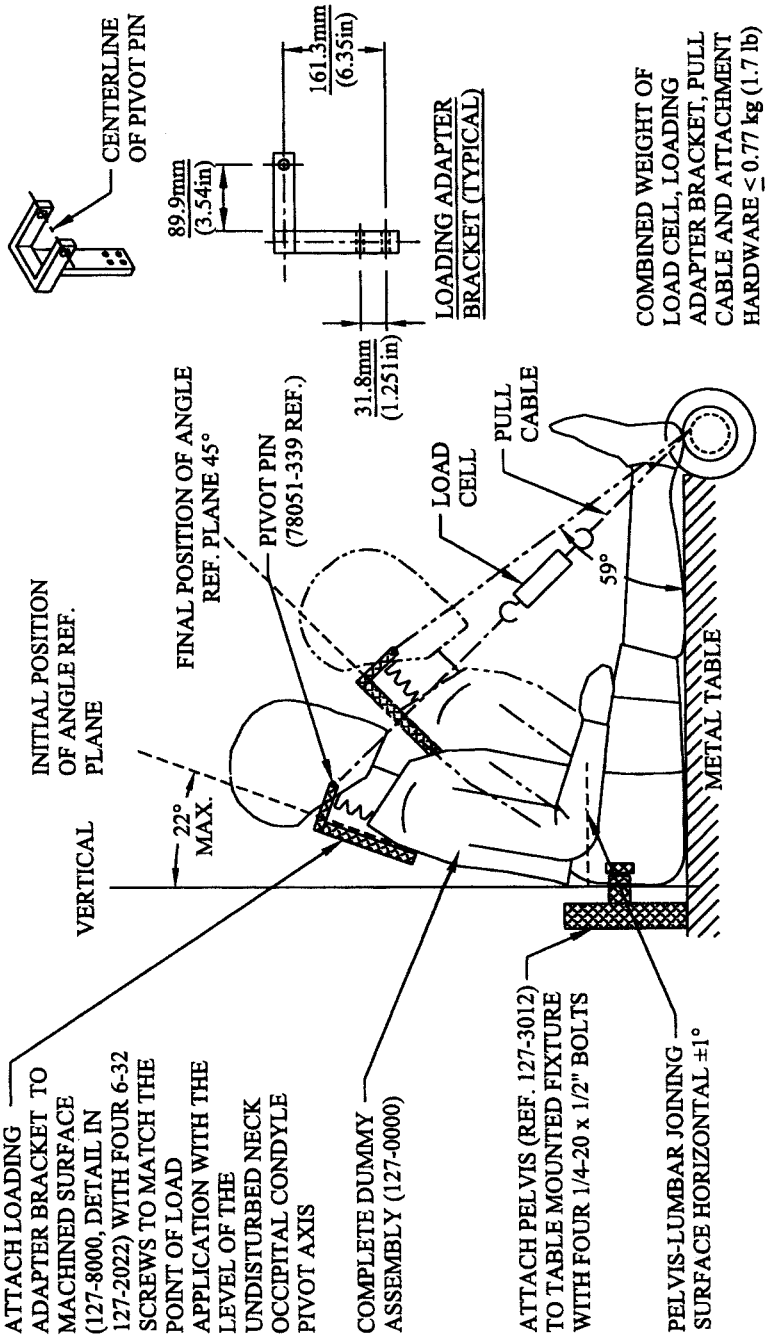

Figure N 6

KNEE IMPACT TEST SET-UP SPECIFICATIONS

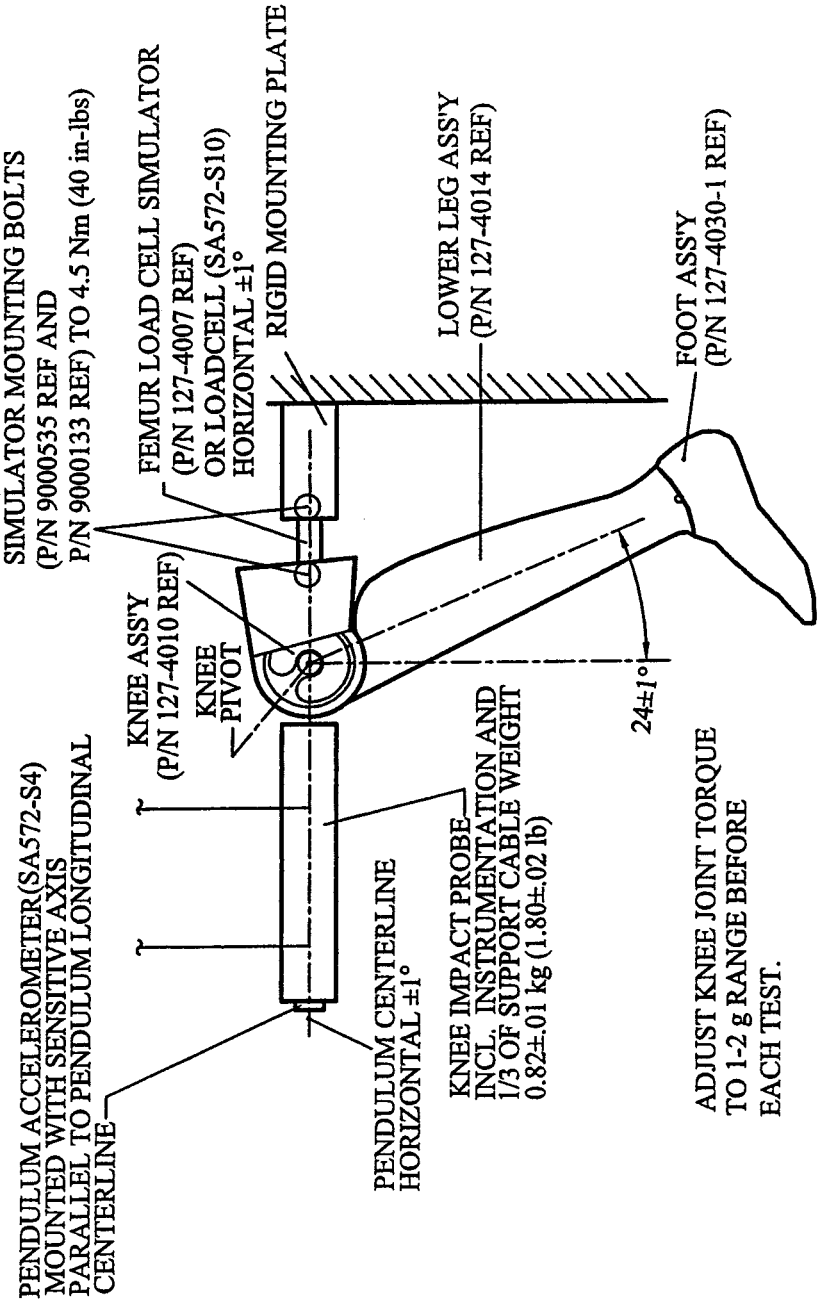

Issued: December 29, 1999.

Rosalyn G. Millman,

Acting Administrator.

[FR Doc. 00–705 Filed 1–12–00; 8:45 am]

BILLING CODE 4910–59–C

DEPARTMENT OF COMMERCE

National Oceanic and Atmospheric Administration

50 CFR Part 635

[I.D. 010600A]

Atlantic Highly Migratory Species Fisheries; Atlantic Bluefin Tuna

AGENCY: National Marine Fisheries Service (NMFS), National Oceanic and Atmospheric Administration (NOAA), Commerce.

ACTION: Closure.

SUMMARY: NMFS closes for the 1999 fishing year (June 1, 1999, through May 31, 2000) the Angling category fishery for large medium and giant Atlantic bluefin tuna (BFT) in the southern area (the waters off Delaware and states south). Fishing for, retaining, possessing, or landing large medium and giant BFT (measuring 73 inches (185 cm) curved fork length or greater) under the Angling category quota is prohibited effective at 11:30 p.m., January 8, 2000. This action is being taken to prevent overharvest of the Angling category southern area subquota for large medium and giant (trophy) BFT.

DATES: Effective 11:30 p.m. on January 8, 2000, through May 31, 2000.

FOR FURTHER INFORMATION CONTACT: Brad McHale, 978–281–9260.

SUPPLEMENTARY INFORMATION: Regulations implemented under the authority of the Atlantic Tunas Convention Act (16 U.S.C. 971 *et seq.*) and the Magnuson-Stevens Fishery Conservation and Management Act (16 U.S.C. 1801 *et seq.*) governing the harvest of BFT by persons and vessels subject to U.S. jurisdiction are found at 50 CFR part 635.

NMFS is required, under § 635.28 (a)(1), to file with the Office of the Federal Register for publication notification of closure when a BFT quota is reached, or is projected to be reached. On and after the effective date and time of such notification, for the remainder of the fishing year or for a specified period as indicated in the notice, fishing for, retaining, possessing, or landing BFT under that quota category is prohibited until the opening of the subsequent quota period or until such date as specified in the notice.

The 1999 BFT quota specifications issued pursuant to § 635.27 set a quota of 4 mt of large medium and giant BFT (measuring 73 inches (185 cm) curved fork length or greater) to be harvested in the southern area (the waters off Delaware and states south) by vessels permitted in the Angling category or Charter/Headboat category during the 1999 fishing year (64 FR 29806, June 3, 1999). The southern area trophy BFT subquota was subsequently adjusted to 4.8 mt (64 FR 48111, September 2, 1999). Based on reported landings of trophy BFT in the southern area, i.e., through the North Carolina Harvest Tagging Program and the Automated Landings Reporting System, and recent effort in the waters off North Carolina, NMFS projects that this subquota will be reached by January 8, 2000. Therefore, through May 31, 2000, fishing for, retaining, possessing, or landing large medium or giant BFT by vessels in the Angling or Charter/Headboat category in the southern area must cease at 11:30 p.m., January 8, 2000.

The intent of this closure is to prevent overharvest of the Angling category southern area trophy BFT subquota. Anglers are reminded that all BFT landed under the Angling category quota must be reported within 24 hours of landing to the NMFS Automated Landings Reporting System by calling 888–USA-TUNA (888–872–8862) or, if landed in the state of North Carolina, to a reporting station prior to offloading. Information about the North Carolina harvest tagging program, including reporting station locations, can be obtained by calling (800) 338–7804. In addition, anglers aboard permitted vessels may continue to tag and release BFT of all sizes under a tag-and-release program, provided the angler tags all BFT so caught, regardless of whether previously tagged, with conventional tags issued or approved by NMFS, returns such fish to the sea immediately after tagging with a minimum of injury, and reports the tagging, and, if the BFT was previously tagged, the information on the previous tag (50 CFR 635.26).

Classification

This action is taken under §§ 635.27(a) and 635.28 (a)(1) and is exempt from review under Executive Order 12866.

Authority: 16 U.S.C. 971 *et seq.* and 1801 *et seq.*

Dated: January 7, 2000.

Bruce C. Morehead,

Acting Director, Office of Sustainable Fisheries, National Marine Fisheries Service.

[FR Doc. 00–754 Filed 1–7–00; 4:49 pm]

BILLING CODE 3510–22–F

Proposed Rules

Federal Register
Vol. 65, No. 9
Thursday, January 13, 2000

This section of the FEDERAL REGISTER contains notices to the public of the proposed issuance of rules and regulations. The purpose of these notices is to give interested persons an opportunity to participate in the rule making prior to the adoption of the final rules.

DEPARTMENT OF ENERGY

Office of Energy Efficiency and Renewable Energy

10 CFR Part 430

[Docket No. EE–RM/TP–99–500]

RIN 1904–AB04

Energy Conservation Program for Consumer Products: Test Procedure for Dishwashers

AGENCY: Office of Energy Efficiency and Renewable Energy, Department of Energy.

ACTION: Proposed rule; reopening of the comment period.

SUMMARY: On September 28, 1999, the Department of Energy published a proposed rule to revise the test procedure for dishwashers under the Energy Policy and Conservation Act (64 FR 54428). In response to a request from the Association of Home Appliance Manufacturers (AHAM), we are reopening the comment period for this rulemaking.

DATES: The Department will accept comments, data, and information regarding the proposed rule no later than Monday, February 14, 2000. Please submit ten (10) copies. In addition, the Department requests that you provide an electronic copy (3½″ diskette) of the comments in WordPerfect™ format.

ADDRESSES: Please send written comments regarding the proposed rule to Ms. Brenda Edwards-Jones at the following address: U.S. Department of Energy, Office of Energy Efficiency and Renewable Energy, EE–41, 1000 Independence Avenue, SW, Washington, DC 20585–0121.

You should identify all documents both on the envelope and on the documents as ''Energy Conservation Program for Consumer Products: Test Procedure for Dishwashers, Docket No. EE–RM/TP–99–500.''

You can read copies of the transcript of the public workshop held on November 2, 1999, and public comments in the Freedom of Information Reading Room (Room No. 1E–190) at the U.S. Department of Energy, Forrestal Building, 1000 Independence Avenue, SW, Washington, DC, between the hours of 9:00 a.m. and 4:00 p.m., Monday through Friday, except Federal holidays.

The latest information regarding the dishwasher test procedure rulemaking is available on the Building Research and Standards web site at the following address: http://www.eren.doe.gov/buildings/codes__standards/notices/notc0024/index.htm

FOR FURTHER INFORMATION CONTACT: Barbara Twigg, U.S. Department of Energy, Office of Energy Efficiency and Renewable Energy, EE–41, 1000 Independence Avenue, SW, Washington, DC 20585–0121, (202) 586–8714, email: barbara.twigg@ee.doe.gov; or Eugene Margolis, Esq., U.S. Department of Energy, Office of General Counsel, GC–72, 1000 Independence Avenue, SW, Washington, DC 20585, (202) 586–9507, email: eugene.margolis@hq.doe.gov

SUPPLEMENTARY INFORMATION: The Department published a Notice of Proposed Rulemaking on September 28, 1999, entitled ''Energy Conservation Program for Consumer Products: Test Procedure for Dishwashers.'' The notice announced December 13, 1999, as the end of the written comment period. In a letter dated December 9, 1999, AHAM requested a postponement of the deadline for the comment period in order to pursue possible testing alternatives, gather additional data, and comply with some of the requests for information made by the Department during the November 2, 1999, workshop.

Because of the complex issues raised at the workshop concerning the selection of a test method that accurately measures the energy consumption of a variety of soil-sensing dishwasher models, we are reopening the comment period until Monday, February 14, 2000. We are especially interested in obtaining additional information and suggestions regarding the proposed formulas and procedures for testing soil-sensing models. We hope that this time extension will permit a more comprehensive investigation into the performance mechanisms of soil-sensing machines pertaining to cycle length, cycle response, and corresponding energy and water consumption levels.

Issued in Washington, DC, on January 7, 2000.

Dan W. Reicher,

Assistant Secretary, Energy Efficiency and Renewable Energy.

[FR Doc. 00–852 Filed 1–12–00; 8:45 am]

BILLING CODE 6450–01–P

DEPARTMENT OF TRANSPORTATION

Federal Aviation Administration

14 CFR Part 91

[Docket No. 26242, Notice No. 00–01]

RIN 2120–AF30

Suspension of Certain Aircraft Operations From the Transponder With Automatic Pressure Altitude Reporting Capability Requirement

AGENCY: Federal Aviation Administration (FAA), DOT.

ACTION: Proposed rule; withdrawal.

SUMMARY: The FAA is withdrawing a proposal to reinstate and modify the provisions of expired Special Federal Aviation Regulation (SFAR) No. 62. SFAR No. 62 suspended certain regulations requiring the installation and use of a transponder with automatic altitude reporting capability within 30 nautical miles of a Class B airspace area primary airport. SFAR No. 62 expired on December 30, 1993. The proposed reinstatement was intended to provide additional time during which aircraft operators could equip their aircraft with automatic altitude reporting transponders. Ten years have passed since implementation of the requirement to install and use automatic altitude reporting transponders in aircraft operating within 30 nautical miles of a Class B airspace area. The FAA finds that ample time has been provided for affected operators to comply with this equipment requirement. Consequently the FAA believes that the relief provided by the proposed regulation is no longer needed. Therefore, the FAA is withdrawing this proposal.

DATES: The proposed rule published on August 25, 1994 (59 FR 43994), is withdrawn as of January 13, 2000.

FOR FURTHER INFORMATION CONTACT: Ellen Crum, Airspace and Rules

Division, ATA–400, Air Traffic Airspace Management Program, Federal Aviation Administration, 800 Independence Ave, SW, Washington, DC 20591; telephone: (202) 267–8783.

SUPPLEMENTARY INFORMATION:

Background

On June 21, 1988, the FAA published a final rule, the Transponder with Automatic Altitude Reporting Capability Requirement (53 FR 23356; June 21, 1988), which required aircraft operating within 30 nautical miles of a Class B airspace area primary airport (commonly referred to as the Mode C veil) to be equipped with an operable transponder with automatic altitude reporting capability. Aircraft not originally certificated with an engine-driven electrical system or not subsequently certificated with such a system installed, balloons, and gliders were excluded from this requirement.

On December 5, 1990, the FAA published a final rule, SFAR No. 62 (55 FR 50302; Dec. 5, 1990), which suspended the automatic altitude reporting transponder requirement for certain aircraft operations in the vicinity of approximately 300 airports in the outlying area of Mode C veils but outside of the confines of the Class B airspace area. Specifically, SFAR No. 62 allowed for the operation of aircraft not equipped with an operable automatic altitude reporting transponder in the airspace at or below the altitude specified in the rule for the airport or along the most direct and expeditious routing (or on a routing directed by air traffic control (ATC)) between those airports and the outer boundary of the Mode C veil, consistent with established traffic patterns, noise abatement procedures, and safety. The purpose of SFAR No. 62 was to provide a limited transition period to allow operators flexibility in equipping their aircraft with transponders within a reasonable timeframe.

Prior to the adoption of SFAR No. 62, requests to deviate from the automatic altitude reporting transponder requirements were handled by ATC facilities on a case-by-case basis. If approved, the ATC authorization specified all restrictions or conditions necessary to ensure that the operation could be conducted safely and without any impact on other operations. The authorization process proved to be inefficient and time consuming for operators and ATC staff due to the very high number of operators requesting ATC authorizations because they had not yet equipped their aircraft with the required transponders.

On August 25, 1994, the FAA published a notice of proposed rulemaking (NPRM) (59 FR 43994; Aug. 25, 1994) that proposed, with some minor modifications, to reinstate the expired provisions of SFAR No. 62 as SFAR No. 62–1. The NPRM identified and excluded those airports where aircraft operations cannot be detected by radar when those operations are conducted at or below a specified altitude and within a 2-nautical-mile radius of the airport, or along the most direct route between that airport and the outer boundary of the Mode C veil. Airports served primarily by aircraft required to be equipped with Traffic Collision Avoidance System (TCAS) also were excluded from the list of airports where SFAR No. 62–1 would apply. The NPRM proposed to modify the expired SFAR No. 62 by revising the altitudes below which automatic altitude reporting transponders would not be required in the vicinity of certain airports where radar upgrades warranted such revisions. Lastly, the NPRM proposed modifications to the list of airports within the Denver Mode C veil at which aircraft operations were excluded from the automatic altitude reporting transponder requirement.

Discussion of Public Comments

Interested parties were invited to participate in the rulemaking process by submitting such written data, views, or arguments regarding the proposal. The comment period originally was scheduled to close on October 11, 1994. However, in accordance with 14 CFR 11.29(c), the Aircraft Owners and Pilots Association (AOPA) requested a 45-day extension of the comment period. The FAA determined that AOPA's request was in the public interest and extended the comment period to November 25, 1994 (59 FR 49360; Sept. 28, 1994).

One hundred fourteen private individuals and 18 associations, including government entities, submitted comments. Because one submission was signed by 13 commenters and another submission was signed by 22 commenters, 99 separate comments were actually received. All comments received during the comment period were considered before making a determination regarding final action on the proposed rule.

Most of the commenters suggest eliminating the automatic altitude reporting transponder equipment requirement when operating within 30 nautical miles of a primary airport listed in section 1 of appendix D to 14 CFR part 91. However, the NPRM did not propose or suggest eliminating the automatic altitude reporting transponder requirement. Specifically, the NPRM proposed to continue, at specific locations and altitudes, a method that would allow aircraft operators to be exempted from the automatic altitude reporting transponder rule itself. Therefore, since the NPRM proposed no changes to the initial regulations requiring the use of transponders with automatic altitude reporting capability within 30 nautical miles of a Class B airspace area, the FAA finds these comments are outside the scope of this specific rulemaking action.

Several commenters oppose the reinstatement of the provisions of SFAR No. 62. These commenters state that the cost of equipping an aircraft with an automatic altitude reporting transponder is small in absolute terms when compared with the safety benefits provided by a transponder. They argue that the safety benefits include increased situational awareness for controllers and pilots when in contact with ATC. In addition, these commenters believe that excepting aircraft from automatic altitude reporting transponder requirements may compromise the effectiveness of TCAS because TCAS requires automatic altitude reporting transponder replies from nearby aircraft to determine whether a threat of potential collision exists.

The FAA agrees that automatic altitude reporting transponders provide increased benefits for controllers and pilots. If a controller is not yet in radio communication with an aircraft that is equipped with an automatic altitude reporting transponder, the transponder provides altitude information that can be received by other TCAS-equipped aircraft in the area, or ATC, without waiting for the pilot to check onto the ATC frequency. The FAA is not aware of any incidents where safety was compromised due to aircraft operating in accordance with SFAR 62. It is important to note, however, that the expired provisions of SFAR No. 62 and the proposed provisions of SFAR No. 62–1 provide access to outlying airports with a minimum of ATC involvement without degrading the safety benefits of the Mode C rule. When operating within the Mode C veil area, aircraft not equipped with an altitude encoding transponder can be accommodated safely, provided that operations are conducted in accordance with restrictions set forth in the ATC authorization.

The FAA notes that in the NPRM, the FAA requested specific comments regarding the effectiveness of SFAR No. 62, as well as the number of aircraft

operators who had benefited from the SFAR. Commenters did not provide information concerning either the number of operators benefiting from the SFAR, or the number of aircraft that are not equipped with automatic altitude reporting transponders and operating within the Mode C veil areas.

When the FAA promulgated the Mode C veil rule in 1988, the intent was to require all aircraft, with certain regulatory exceptions, to be equipped with an operable altitude encoding transponder when operating within 30 nautical miles of a Class B airspace area primary airport. For those instances where a pilot was unable to comply with this equipment requirement, an ATC authorization could be obtained from the appropriate ATC facility. SFAR No. 62 was promulgated as a temporary measure only to alleviate the workload associated with granting ATC authorizations and to allow additional time for certain operators to equip their aircraft with altitude encoding transponders.

There are no regulations requiring aircraft owners to report the types of transponders installed in their aircraft. Therefore, it is difficult to estimate the number of aircraft that are equipped with altitude reporting transponders. However, in 1995, the FAA published the ''General Aviation and Air Taxi Activity and Avionics Survey,'' prepared by the Office of Aviation Policy and Plans (APO–1). The survey provides information about the activity and avionics equipment of the general aviation and air taxi fleet. The information for the survey is collected using a statistically designed sample survey. The sample is selected from all general aviation and air taxi aircraft registered with the FAA. According to this survey, almost 70 percent of fixed wing general aviation aircraft have Mode C or Mode S installed, and almost 60 percent of rotorcraft have Mode C or Mode S installed.

Several years have passed since SFAR No. 62 was promulgated in 1990. The FAA believes that sufficient time has been provided for aircraft operators to purchase and install automatic altitude reporting transponders. Moreover, the best available information indicates that a majority of operators have installed altitude encoding transponders. Those aircraft operators without an operating transponder may use the ATC authorization procedures to get relief from the equipment requirement; therefore, the FAA is withdrawing the proposed rule to reinstate SFAR No. 62. The FAA will continue to assess the impact of the 1988 equipment requirement upon aircraft operators and the National Airspace System.

Withdrawal of Proposed Rule

Accordingly, the proposed amendment to reinstate SFAR No. 62 as SFAR No. 62–1 under 14 CFR Part 91 (Notice No. 94–28), published on page 43994 in the **Federal Register** of August 25, 1994, is withdrawn.

Issued in Washington, DC on January 7, 2000.

John Walker,

Program Director, Air Traffic Airspace Management Program.

[FR Doc. 00–864 Filed 1–12–00; 8:45 am]

BILLING CODE 4910–13–P

DEPARTMENT OF TRANSPORTATION

Federal Aviation Administration

14 CFR Parts 121 and 129

[Docket No. 27066; Notice No. 92–18]

RIN 2120–AE79

Antidrug Program and Alcohol Misuse Prevention Program for Employees of Foreign Air Carriers Engaged in Specified Aviation Activities

AGENCY: Federal Aviation Administration, DOT.

ACTION: Withdrawal of proposed rule.

SUMMARY: The Omnibus Transportation Employee Testing Act of 1991 (the Act) authorized the Federal Aviation Administration (FAA) Administrator to prescribe regulations that would require foreign air carriers to establish drug and alcohol testing programs for employees performing safety-sensitive aviation functions, but only to the extent such regulations are consistent with the international obligations of the United States and take into consideration any applicable laws and regulations of foreign countries. This document withdraws the proposed rulemaking to require foreign air carriers to establish drug and alcohol testing programs for their employees performing safety-sensitive aviation functions within the territory of the United States. The FAA has determined that through the International Civil Aviation Organization (ICAO) multilateral action has been taken to support an aviation environment free of substance abuse. However, if the threat to aviation safety posed by substance abuse has increased or requires additional efforts and the international community has not adequately responded, the FAA will take appropriate action, including, if necessary, the reinitiation of this rulemaking.

DATES: The proposed rule is withdrawn as of January 13, 2000.

FOR FURTHER INFORMATION CONTACT: Ms. Diane J. Wood, Office of Aviation Medicine, Drug Abatement Division (AAM–800), Federal Aviation Administration, 800 Independence Ave., SW., Washington, DC 20591; telephone (202) 267–8442.

SUPPLEMENTARY INFORMATION:

Background

In the Omnibus Transportation Employee Testing Act of 1991, the Administrator was authorized, among other things, to prescribe regulations requiring foreign air carriers to implement drug and alcohol testing programs, but only if such regulations as were consistent with the international obligations of the United States. The Administrator was also directed to take into consideration foreign laws and regulations.

Pursuant to this statute, in December 1992, the FAA issued an advance notice of proposed rulemaking (ANPRM) in which a number of questions about the legal, practical, and cultural issues associated with testing were posed [57 FR 59473]. The FAA received 65 comments on the ANPRM, most of which were provided by foreign governments of foreign air carriers. Nineteen of the comments were procedural, requesting an extension of the comment period. Three comments were received that supported the concept of unilateral imposition of testing requirements on foreign air carriers. The remaining comments stated objection in whole or in part to the possible unilateral imposition of testing requirements on foreign air carriers in the United States. In February 1994, the FAA issued a notice of proposed rulemaking (NPRM) to require foreign air carriers operating to the United States to implement testing programs like those required of U.S. carriers unless multilateral action was taken to support an international aviation environment free of substance abuse [59 FR 7420].

The FAA cited as a specific example of such action the work in progress by an International Civil Aviation Organization (ICAO) working group to develop guidance material on substance abuse prevention methodologies. ICAO is a treaty organization through which the signatory countries (known as the ''Contracting States'') develop and promote safe and efficient international aviation. There are currently more than 180 Contracting States (including the United States), covering virtually every part of the world. The Contracting States

look to ICAO for standards, recommended practices, and guidance on issues related to aviation.

A significant number of the foreign governments for foreign air carriers that responded to the NPRM expressed support for deferring to ICAO to take action on substance abuse prevention. Their comments also reiterated the concerns expressed following publication of the ANPRM, with further discussion of the possible adverse consequences and costs that would likely follow any imposition of mandatory testing programs. Several commenters noted that the laws of the jurisdiction in which their employees are hired could prohibit employers from complying with mandatory testing regulations imposed by the United States.

The commenters that favored imposition of regulations requiring drug and alcohol testing on foreign air carriers primarily raised two issues: first, that safety demands imposition of the regulations; and second, that U.S. carriers would be placed at a competitive disadvantage by being required to incur costs not faced by foreign air carriers.

With respect to the first concern, the FAA remains committed to ensuring aviation safety. However, in light of recent ICAO action, as well as the significant practical and legal concerns that have been raised by the commenters, it does not appear that this rulemaking at this time is the best way to ensure that safety is not compromised. Because of the ICAO action, the FAA has determined that unilateral imposition of testing regulations on foreign air carriers is not warranted.

Several factors were weighed in making this determination. The FAA has an active program to assess whether foreign air carriers are held to international standards by their countries of registry—standards that include medical requirements for flight crewmembers and a prohibition on the operation of aircraft by impaired pilots.

Also, on February 24, 1998, the 153rd Session of the ICAO Council met and adopted amendments to the Standards and Recommended Practices contained in Appendix A of the Chicago Convention. Specifically, a Standard was adopted which applies to individuals, and prohibits them from performing safety-critical functions while under the influence of any psychoactive substance. A psychoactive substance is defined as ''alcohol, opioids, cannabinoids, sedatives and hypnotics, cocaine, other psychostimulents, hallucinogens, and volatile solvents, whereas coffee and tobacco are excluded.'' The Standards are required to appear within the domestic regulations of each Contracting State, unless the Contracting State has filed a difference with ICAO to disavow the Standard. The ICAO Council also adopted a Recommended Practice which encourages the Contracting States to identify and remove personnel who engage in problematic use of substances. The Recommended Practice incorporates the ''Manual on Prevention of Problematic Use of Substances in the Aviation Workplace,'' ICAO Document 9654–AN/945 (''Manual''), the English version of which was published in September 1995. The FAA has reviewed this document and has determined that it clearly supports a safe aviation environment.

As set forth in the first paragraph of the Manual, ICAO recognizes that ''[a]viation workers have a special obligation to ensure that they are capable of performing their duties to the best of their abilities. Similarly, aviation regulatory authorities and industry employers have a special obligation to ensure that aviation safety is maintained at a high level and that precautions necessary to achieve this are implemented.'' *Id.* at ¶1.1 The Manual further establishes ICAO's concurrence with the position of the FAA that ''[e]specially in international aviation, it is fair to say that the responsibility for hundreds of human lives and vast quantities of valuable property resting with safety-sensitive personnel in civil aviation make it imperative that these workers perform their duties in a professional manner and without any impairment in performance due to substance use.'' *Id.* at ¶ 1.15 Finally, ICAO also recognizes that far from being simply a U.S. problem, as some commenters to this rulemaking have asserted, ''[i]t is necessary that aviation regulators and employers recognize that substance use is a pandemic affecting most if not all parts of the world.'' They must also realize that ''any employee may be susceptible to the pressures and influences of the professional and social environment or certain life events, and it would be dangerous to assume that aviation is not vulnerable to t he consequences of these pressures and influences. *Prevention efforts should not be delayed until a significant problem has been identified. Responding only after an accident has occurred or public trust has been broken defeats the purpose of prevention.'' Id* at ¶ 1.20 (emphasis added).

The other issue raised by commenters is that of competitive disadvantage. While the FAA is cognizant of the costs of the antidrug rules to domestic carriers, those costs alone do not warrant imposition of similar regulations on foreign air carriers when compared to recent multilateral actions as well as the legal and practical difficulties in imposing such rules. The FAA has also determined that the antidrug rules provide significant benefits to U.S. air carriers in terms of increased worker productivity, reduced absenteeism and medical costs, and other benefits associated with workplace substance abuse prevention programs. Further, companies with active prevention programs could be perceived by travelers (especially those in the United States) as safer than companies without such programs providing another benefit to domestic carriers.

Withdrawal of Proposed Rule

For the foregoing reasons, the FAA is withdrawing the rulemaking proposed on February 15, 1994, and is leaving within the purview of each government the method chosen to respond to the ICAO initiatives. We will continue to view a multilateral response as the best approach to evolving issues in the substance abuse arena. Should the FAA subsequently determine, however,that the scope of the threat of substance abuse is not being adequately addressed by the international community, the FAA will take appropriate action, including the possible reinitiation of this rulemaking.

Issued in Washington, DC, on January 10, 2000.

Robert Poole,

Acting Federal Air Surgeon.

[FR Doc. 00–862 Filed 1–12–00; 8:45 am]

BILLING CODE 4910–13–M

DEPARTMENT OF LABOR

Employment and Training Administration

20 CFR Part 604

RIN 1205–AB21

Birth and Adoption Unemployment Compensation; Extension of Comment Period

AGENCY: Employment and Training Administration, Labor.

ACTION: Notice of proposed rulemaking; extension of comment period.

SUMMARY: This document extends by 15 days the period for filing comments regarding a notice of proposed

rulemaking intended to implement the Birth and Adoption Unemployment Compensation program. This action is taken to permit additional comment from interested persons.

DATES: Comments must be received on or before February 2, 2000.

ADDRESSES: Send written comments to Grace A. Kilbane, Director, Unemployment Insurance Service, Employment and Training Administration (ETA), U.S. Department of Labor, 200 Constitution Avenue, NW, Room S–4231, Washington, DC 20210, or by e-mail to the following address: *commentonbaauc@doleta.gov.*

FOR FURTHER INFORMATION CONTACT: Gerard Hildebrand, Unemployment Insurance Service, ETA, U.S. Department of Labor, 200 Constitution Avenue, N.W., Room S–4231, Washington, DC 20210. Telephone: (202) 219–5200 (this is not a toll-free number); facsimile: (202) 219–8506.

SUPPLEMENTARY INFORMATION: In the **Federal Register** of December 3, 1999 (64 FR 67971), the Department of Labor published a notice of proposed rulemaking intended to add 20 CFR Part 604, which concerns the establishment of a Birth and Adoption Unemployment Compensation program. Interested persons were requested to submit comments on or before January 18, 2000.

The Department has received a number of requests for extensions of the comment period. The Department believes that it is reasonable to extend the comment period an additional 15 days for all interested persons. Therefore, the comment period for the notice of proposed rulemaking, adding 20 CFR Part 604 (Regulations for Birth and Adoption Unemployment Compensation), is extended to February 2, 2000.

Signed at Washington, DC, on January 10, 2000.

Raymond L. Bramucci,

Assistant Secretary of Labor.

[FR Doc. 00–844 Filed 1–12–00; 8:45 am]

BILLING CODE 4510–30–M

DEPARTMENT OF THE TREASURY

Internal Revenue Service

26 CFR Part 1

[REG–103831–99]

RIN 1545–AX09

Allocation of Partnership Debt

AGENCY: Internal Revenue Service (IRS), Treasury.

ACTION: Notice of proposed rulemaking and notice of public hearing.

SUMMARY: This document contains proposed regulations relating to the allocation of nonrecourse liabilities by a partnership. The proposed regulations revise tier three of the three-tiered allocation structure contained in the current nonrecourse liability regulations, and also provide guidance regarding the allocation of a single nonrecourse liability secured by multiple properties. This document also contains a notice of public hearing on these proposed regulations.

DATES: Written comments must be received by April 12, 2000. Requests to speak (with outlines of oral comments) at a public hearing scheduled for May 3, 2000, at 10 a.m., must be received by April 12, 2000.

ADDRESSES: Send submissions to: CC:DOM:CORP:R (REG–103831–99), room 5228, Internal Revenue Service, POB 7604, Ben Franklin Station, Washington, DC 20044. In the alternative, submissions may be hand delivered between the hours of 8 a.m. and 5 p.m. to: CC:DOM:CORP:R (REG–103831–99), Courier's Desk, Internal Revenue Service, 1111 Constitution Avenue NW., Washington, DC. Alternatively, taxpayers may submit comments electronically via the Internet by selecting the ''Tax Regs'' option of the IRS Home Page, or by submitting comments directly to the IRS Internet site at: http://www.irs.ustreas.gov/prod/tax__regs/comments.html. The public hearing will be held in Room 2615, Internal Revenue Building, 1111 Constitution Avenue, NW., Washington, DC.

FOR FURTHER INFORMATION CONTACT: Concerning the regulations, Christopher Kelley, (202) 622–3070; concerning submissions of comments, the hearing, and/or to be placed on the building access list to attend the hearing, Guy Traynor, (202) 622–7190 (not toll-free numbers).

SUPPLEMENTARY INFORMATION:

Introduction

This document proposes to revise §§ 1.752–3 and 1.752–5 of the Income Tax Regulations (26 CFR part 1) relating to the allocation by a partnership of nonrecourse liabilities.

Background

Treasury regulation § 1.752–3 currently provides a three-tiered system for allocating nonrecourse liabilities. The three-tiered system applies sequentially. Thus, as a portion of a liability is allocated to a partner under the first tier, that portion is not available to be allocated under the second tier. Similarly, as a portion of a liability is allocated to a partner under the second tier, that portion is not available to be allocated in the third tier.

Under the first tier, a partner is allocated an amount of the liability equal to that partner's share of partnership minimum gain under section 704(b). See § 1.704–2(g)(1).

Under the second tier, to the extent the entire liability has not been allocated under the first tier, a partner will be allocated an amount of liability equal to the gain that partner would be allocated under section 704(c) if the partnership disposed of all partnership property subject to one or more nonrecourse liabilities in full satisfaction of the liabilities (section 704(c) minimum gain). Under the third tier, a partner is allocated any excess nonrecourse liabilities under one of several methods that the partnership may choose. One allocation method is based on the partner's share of partnership profits. The partnership may specify in its partnership agreement the partners' interests in partnership profits for purposes of allocating excess nonrecourse liabilities provided the specified interests are reasonably consistent with allocations of some other significant item of partnership income or gain. The partnership also may allocate excess nonrecourse liabilities in accordance with the manner in which it is reasonably expected that the deductions attributable to those nonrecourse liabilities will be allocated. The partnership may change its allocation method under the third tier from year to year.

In Rev. Rul. 95–41, 1995–1 C.B. 132, the IRS and Treasury addressed the effect of the three section 704(c) allocation methods under § 1.704–3 upon the three tiers of § 1.752–3(a). Rev. Rul. 95–41 also stated that in determining the partners' interests in partnership profits, solely for purposes of the third tier, section 704(c) built-in gain (i.e., the excess of a property's book value over the contributing partner's adjusted tax basis in the property upon contribution) that was not taken into account under § 1.752–3(a)(2) (the second tier) is one factor, but not the only factor, to be considered. This gain (excess section 704(c) gain) is equal to the excess of the amount of section 704(c) built-in gain attributable to an item of property over the amount of section 704(c) minimum gain on that property.

Explanation of Provisions

Modifications to Third Tier

The three tiers of § 1.752–3(a) are structured to allocate liabilities to those partners who generally would be allocated income or gain upon the relief of those liabilities. Under section 752(b), any decrease in a partner's share of the liabilities of a partnership will be considered a distribution of money to the partner by the partnership.

Under section 731(a), a partner will recognize gain on the distribution of money by the partnership to the extent that the distribution exceeds the partner's adjusted basis in its partnership interest. Section 704(c) generally ensures that any built-in gain on contributed property will be recognized by the contributing partner upon the disposition of the property by the partnership. The partnership liability allocation rules arguably should not accelerate the contributing partner's recognition of that gain when the amount of the partnership's liability attributable to such property is sufficient, if allocated to the contributing partner, to prevent such partner from recognizing gain.

In response to comments received, the proposed regulations modify the third tier to allow a partnership to allocate the portion of a nonrecourse liabilities in excess of the portions allocated in tiers one and two (excess nonrecourse liabilities) based on the excess section 704(c) gain attributable to the property securing the liability. Thus, to the extent a portion of a partnership nonrecourse liability is available to be allocated in the third tier, the partnership may allocate that portion to the contributing partner based on the excess section 704(c) gain inherent in the property.

Under § 1.704–3(a)(2), section 704(c) generally applies on a property-by-property basis. Therefore, in determining the amount of excess section 704(c) gain, the built-in gains and losses on items of contributed property cannot be aggregated.

Section 1.704–3(a)(3)(i) provides that the book value of contributed property is equal to its fair market value at the time of contribution and is subsequently adjusted for cost recovery and other events that affect the basis of the property. Section 1.704-3(a)(3)(ii) provides that the section 704(c) built-in gain with respect to a property is the excess of the property's book value over the contributing partner's adjusted tax basis in the property upon contribution. The built-in gain is thereafter reduced by decreases in the difference between the property's book value and adjusted tax basis. Similarly, the excess section 704(c) gain will decline as the difference between the property's fair market value and tax basis declines.

If a partnership holds section 704(c) property subject to the ceiling rule of § 1.704–3(b)(1), in certain situations, the first tier of § 1.752–3(a) can gradually shift the allocation of liabilities away from the partner that contributed the property (the contributing partner) to a non-contributing partner who does not necessarily need, for tax purposes, the entire amount of the liability allocated to the non-contributing partner in the first tier. This can give rise to deemed distributions to the contributing partner, resulting in gain recognition under section 731(a)(1) at a time that arguably is earlier than appropriate. The IRS and Treasury considered other alternatives for amending § 1.752–3 that would address these liability shifts caused by the ceiling rule, but rejected them because of their complexity. The proposed alternative was adopted because it is simple and seems to address the predominant concerns raised by practitioners regarding the contribution of section 704(c) property. The IRS and Treasury request comments on whether further modifications to the three-tiered structure of § 1.752–3(a) are necessary to more appropriately allocate nonrecourse liabilities among partners and, if so, what type of modifications would be appropriate.

The holding in Rev. Rul. 95–41, 1995–1 C.B. 132, that excess section 704(c) gain is one factor to consider in determining a partner's interest in partnership profits will remain relevant where a partner does not allocate nonrecourse debt under the third tier based on the excess section 704(c) gain attributable to the property that is subject to the debt. However, once a partner has allocated nonrecourse indebtedness pursuant to the rule in these proposed regulations based upon excess section 704(c) gain, that excess section 704(c) gain cannot again be considered in determining a partner's interest in partnership profits.

Allocation of Single Liability Among Multiple Properties

Several commentators have requested that the IRS and Treasury issue guidance regarding the calculation of section 704(c) minimum gain under the second tier when a partnership holds multiple properties subject to a single nonrecourse liability. This situation typically arises when a partnership that holds several properties, each subject to an individual liability, refinances the individual liabilities with a single nonrecourse liability.

To apply the second tier, partnerships must determine the amount of the liability that encumbers each asset. This allows the partnerships to determine the section 704(c) minimum gain in each asset. See § 1.704–3(a)(2).

The proposed regulations provide that if a partnership holds multiple properties subject to a single liability, the liability may be allocated among the properties based on any reasonable method. Under the proposed regulations, a method is not reasonable if it allocates to any property an amount that exceeds the fair market value of the property. Thus, for example, the liability may be allocated to the properties based on the relative fair market value of each property.

The portion of the nonrecourse liability allocated to each item of partnership property is treated as a separate loan under § 1.752–3(a)(2). The proposed regulations provide that once a liability is allocated among the properties, a partnership may not change the method for allocating the liability. However, if one of the properties is no longer subject to the liability, the portion of the liability allocated to that property must be reallocated to the properties still subject to the liability so that the amount allocated to any property does not exceed the fair market value of such property at the time of the reallocation.

If the outstanding principal of a liability is reduced, the reduction will affect the amount of section 704(c) minimum gain under the second tier. The proposed regulations provide that as the outstanding principal of a liability is reduced, the reduction in principal outstanding is allocated among the properties in the same proportion that the principal originally was allocated to the properties.

These rules affect only the calculation of section 704(c) minimum gain under the second tier of § 1.752–3(a).

Allocation of Single Liability Among Multiple Partnerships

Some commentators also have requested guidance on allocations of a nonrecourse liability among multiple partnerships. This situation may arise when a partner contributes multiple properties subject to the same nonrecourse liability to more than one partnership. It also may arise in a division of a partnership under section 708. Although the proposed regulations do not address this issue, the IRS and Treasury request comments regarding appropriate methods of allocating such liabilities.

Proposed Effective Date

These regulations are proposed to apply to any liability incurred or assumed by a partnership on or after the date final regulations are published in the **Federal Register**.

Special Analyses

It has been determined that this notice of proposed rulemaking is not a significant regulatory action as defined in Executive Order 12866. Therefore, a regulatory assessment is not required. It also has been determined that section 553(b) of the Administrative Procedure Act (5 U.S.C. chapter 5) does not apply to these regulations, and because the regulations do not impose a collection of information on small entities, a Regulatory Flexibility Analysis is not required. Pursuant to section 7805(f) of the Internal Revenue Code, this notice of proposed rulemaking will be submitted to the Chief Counsel for Advocacy of the Small Business Administration for comment on its impact on small business.

Comments and Public Hearing

Before these proposed regulations are adopted as final regulations, consideration will be given to any written comments (preferably a signed original and eight (8) copies) that are submitted timely to the IRS. The IRS and Treasury specifically request comments on the clarity of the proposed regulations and how they may be made easier to understand. All comments will be available for public inspection and copying.

A public hearing has been scheduled for May 3, 2000, at 10 a.m., in Room 2615, Internal Revenue Building, 1111 Constitution Avenue NW., Washington, DC. Due to building security procedures, visitors must enter at the 10th Street entrance, located between Constitution and Pennsylvania Avenues, NW. In addition, all visitors must present photo identification to enter the building. Because of access restrictions, visitors will not be admitted beyond the Internal Revenue Building lobby more than 15 minutes before the hearing starts. For information about having your name placed on the building access list to attend the hearing, see the **FOR FURTHER INFORMATION CONTACT** section of this preamble.

The rules of 26 CFR 601.601(a)(3) apply to the hearing. Persons that wish to present oral comments at the hearing must submit timely written comments and an outline of the topics to be discussed and the time to be devoted to each topic (preferably a signed original and eight (8) copies) by April 12, 2000.

A period of 10 minutes will be allotted to each person for making comments.

An agenda showing the scheduling of the speakers will be prepared after the deadline for receiving outlines has passed. Copies of the agenda will be available free of charge at the hearing.

Drafting Information: The principal author of these regulations is Christopher Kelley, Office of Chief Counsel (Passthroughs and Special Industries). However, other personnel from the IRS and Treasury Department participated in their development.

List of Subjects in 26 CFR Part 1

Income taxes, Reporting and recordkeeping requirements.

Proposed Amendments to the Regulations

Accordingly, 26 CFR part 1 is proposed to be amended as follows:

PART 1—INCOME TAXES

Paragraph 1. The authority citation for part 1 continues to read in part as follows:

Authority: 26 U.S.C. 7805 * * *.

Par. 2. Section 1.752–3 is amended as follows:

1. Paragraph (a)(3) is amended by adding two sentences immediately before the last sentence in the paragraph.
2. Paragraph (b) is redesignated as paragraph (c).
3. New paragraph (b) is added.
4. Paragraph (d) is added.

The additions read as follows:

§ 1.752–3 Partner's share of nonrecourse liabilities.

(a) * * *

(3) * * * Additionally, the partnership may first allocate an excess nonrecourse liability to a partner up to the amount of built-in gain on section 704(c) property (as defined under § 1.704–3(a)(3)(ii)) that is allocable to the partner on the property subject to that nonrecourse liability to the extent that such built-in gain exceeds the gain described in paragraph (a)(2) of this section with respect to such property. To the extent a partnership uses this additional method and the entire amount of the excess nonrecourse liability is not allocated to the contributing partner, the partnership must allocate the remaining amount of the excess nonrecourse liability under one of the other methods in this paragraph (a)(3). * * *

(b) *Allocation of a single nonrecourse liability among multiple properties*—(1) *In general.* For purposes of determining the amount of taxable gain under paragraph (a)(2) of this section, if a partnership holds multiple properties subject to a single nonrecourse liability, the partnership may allocate the liability among the multiple properties under any reasonable method. A method is not reasonable if it allocates to any item of property an amount of the liability in excess of the fair market value of the property at the time the liability is incurred. The portion of the nonrecourse liability allocated to each item of partnership property is then treated as a separate loan under paragraph (a)(2) of this section. In general, a partnership may not change the method of allocating a single nonrecourse liability under this paragraph (b) while any portion of the liability is outstanding. However, if one or more of the multiple properties subject to the liability is no longer subject to the liability, the portion of the property allocated to that property must be reallocated among the properties still subject to the liability so that the amount of the liability allocated to any property does not exceed the fair market value of such property at the time of reallocation.

(2) *Reductions in principal.* For this paragraph (b), when the outstanding principal of a partnership liability is reduced, the reduction of outstanding principal is allocated among the multiple properties in the same proportion that the partnership liability originally was allocated to the properties under paragraph (b)(1) of this section.

* * * * *

(d) *Effective date.* This section applies to partnership liabilities incurred or assumed on or after the date final regulations are published in the **Federal Register**.

Par. 3. The first sentence of paragraph (a) of § 1.752–5 is revised to read as follows:

§ 1.752–5 Effective dates and transition rules.

(a) *In general.* Except as otherwise provided in § 1.752–3(d), unless a partnership makes an election under paragraph (b)(1) of this section to apply the provisions of §§ 1.752–1 through 1.752–4 earlier, §§ 1.752–1 through 1.752–4 apply to any liability incurred or assumed by a partnership on or after December 28, 1991, other than a liability incurred or assumed by the partnership pursuant to a written binding contract

in effect prior to December 28, 1991 and at all times thereafter. * * *

* * * * *

Robert E. Wenzel,

Deputy Commissioner of Internal Revenue.

[FR Doc. 00–275 Filed 1–12–00; 8:45 am]

BILLING CODE 4830–01–P

DEPARTMENT OF THE TREASURY

Internal Revenue Service

26 CFR Part 1

[REG–116567–99]

RIN 1545–AX67

Definition of Hyperinflationary Currency for Purposes of Section 988

AGENCY: Internal Revenue Service (IRS), Treasury.

ACTION: Notice of proposed rulemaking and notice of public hearing.

SUMMARY: This document contains proposed regulations concerning when a currency will be considered hyperinflationary for purposes of section 988. These regulations are intended to prevent distortions associated with the computation of income and expense arising from section 988 transactions denominated in hyperinflationary currencies. This document also provides notice of a public hearing on these regulations.

DATES: Written and electronic comments must be received by April 20, 2000. Requests to speak (with outlines of oral comments) at the public hearing scheduled for May 17, 2000 at 10 a.m. must be submitted by April 20, 2000.

ADDRESSES: Send submissions to CC:DOM:CORP:R (REG–116567–99), room 5226, Internal Revenue Service, POB 7604, Ben Franklin Station, Washington, DC. 20044. Submissions may be hand delivered Monday through Friday between the hours of 8 a.m. and 5 p.m. to CC:DOM:CORP:R (REG–116567–99), Courier's Desk, Internal Revenue Service, 1111 Constitution Avenue, NW., Washington, DC. Alternatively, taxpayers may submit comments electronically via the Internet by selecting the ''Tax Regs'' option on the IRS Home Page, or by submitting comments directly to the IRS site at http://www.irs.ustreas.gov/tax-regs/regslist.html. The public hearing is in room 2615, Internal Revenue Building, 1111 Constitution Avenue, NW., Washington, DC.

FOR FURTHER INFORMATION CONTACT: Concerning the proposed regulations, Roger M. Brown at (202) 622–3830; concerning submissions of comments, the hearing, and/or requests to be placed on the building access list to attend the hearing, contact Guy R. Traynor at (202) 622–7180 (not toll-free numbers) .

SUPPLEMENTARY INFORMATION:

Background

This document contains a proposed amendment to the Income Tax Regulations (26 CFR part 1) under section 988 of the Internal Revenue Code (Code). On March 17, 1992, the IRS and Treasury published final regulations in the **Federal Register** at 57 FR 9172 relating to the taxation of section 988 transactions, including, *inter alia*, transactions denominated in hyperinflationary currencies. Also on March 17, 1992, proposed regulations were published in the **Federal Register** at 57 FR 9217 (INTL–15–91) relating to the treatment of certain financial instruments denominated in hyperinflationary currencies. The proposed regulations did not separately define hyperinflationary currency. Rather, they simply made reference to the definition in the final regulations, § 1.988–1(f).

Further, elsewhere in this issue of the **Federal Register**, TD 8860 finalized the proposed regulations issued in 1992. This notice of proposed rulemaking is intended to accompany the publication of these final regulations and propose a change in the period of years that are considered in determining whether a currency is hyperinflationary for purposes of section 988.

Explanation of Provisions

For purposes of section 988, the term *hyperinflationary currency* is defined in § 1.988–1(f), which utilizes the definition in § 1.985–1(b)(2)(ii)(D). This definition was developed in the context of the Dollar Approximate Separate Transactions Method (DASTM) regulations, § 1.985–3, and generally considers the cumulative effects of inflation over the base period in determining whether a currency is hyperinflationary. The base period consists of the thirty-six calendar month period immediately preceding the first day of the current calendar year. Use of this base period is generally appropriate in the context of DASTM because a qualified business unit needs to know in advance if it is subject to § 1.985–3 calculations. In part, this is because of the translation period requirements of § 1.985–3(c)(7).

However, failure to take the current year's inflation into account for purposes of computing foreign currency gain or loss under section 988 may lead to distortions in income and expense arising from certain items whose cash flows reflect hyperinflationary conditions because inflation may rise dramatically in a single year. Accordingly, the IRS and Treasury believe that for purposes of section 988, it is more appropriate to consider the cumulative inflation rate over the thirty-six month period ending on the last day of the taxpayer's (or the qualified business unit's) current taxable year. See also § 1.905–3T(d)(4)(i) (including current year inflation in determining whether a currency is hyperinflationary for purposes of section 905). The change in the base period in this notice of proposed rulemaking, however, applies only for the purposes of section 988 and not for the purpose of determining whether a taxpayer (or QBU) is subject to the provisions of § 1.985–3. However, other Code provisions may be affected by this change, due to the relationship of their substantive rule to section 988. See, *e.g.,* § 1.267(f)–1(e) (relating to the application of the loss disallowance rule of section 267(a)(1) as applied to related party, nonfunctional currency loans).

Proposed Effective Date

These regulations are proposed to apply to transactions entered into after February 14, 2000. Until these proposed regulations are finalized, the existing final regulations under § 1.988–1(f) shall remain in effect.

Special Analyses

It has been determined that this notice of proposed rulemaking is not a significant regulatory action as defined in Executive Order 12866. Therefore, a regulatory assessment is not required. It has also been determined that section 553(b) of the Administrative Procedure Act (5 U.S.C. chapter 5) does not apply to these regulations, and, because these regulations do not impose a collection of information on small entities, the provisions of the Regulatory Flexibility Act (5 U.S.C. chapter 6) do not apply. Pursuant to section 7805(f) of the Internal Revenue Code, this notice of proposed rulemaking will be submitted to the Small Business Administration for comment on its impact on small businesses.

Comments and Requests for a Public Hearing

Before these proposed regulations are adopted as final regulations, consideration will be given to any electronic and written comments (a signed original and eight (8) copies, if written) that are submitted timely to the IRS. In particular, the IRS and Treasury are interested in comments relating to the change in the measurement of the base period, and suggesting other

standards that may be applied in determining whether a currency should be considered hyperinflationary for purposes of section 988. Examples of the latter category of comments would be suggestions of alternative time periods (base periods) and hyperinflationary thresholds (*e.g.,* different from the current 100% cumulative inflation rate) which may be used in determining whether a currency is hyperinflationary. All comments will be available for public inspection and copying.

A public hearing has been scheduled for May 17, 2000, beginning at 10 a.m. in room 2615, Internal Revenue Building, 1111 Constitution Avenue, NW., Washington, DC. Due to building security procedures, visitors must enter at the Constitution Avenue entrance, located 1111 Constitution Avenue. In addition, all visitors must present photo identification to enter the building. Because of access restrictions, visitors will not be admitted beyond the immediate entrance area more than 15 minutes before the hearing starts. For information about having your name placed on the building access list to attend the hearing, see the **FOR FURTHER INFORMATION CONTACT** section of this preamble.

The rules of 26 CFR 601.601(a)(3) apply to the hearing.

Persons who wish to present oral comments at the hearing must submit written comments by April 20, 2000, and submit an outline of the topics to be discussed and the time to be devoted to each topic (signed original and eight (8) copies) by April 20, 2000. A period of ten (10) minutes will be allotted to each person for making comments. An agenda showing the scheduling of speakers will be prepared after the deadline for receiving outlines has passed. Copies of the agenda will be available free of charge at the hearing.

Drafting Information: The principal author of these regulations is Roger M. Brown of the Office of the Associate Chief Counsel (International). However, other personnel from the IRS and Treasury Department also participated in their development.

List of Subjects in 26 CFR Part 1

Income taxes, Reporting and recordkeeping requirements.

Proposed Amendments to the Regulations

Accordingly, 26 CFR part 1 is proposed to be amended as follows:

PART 1—INCOME TAXES

Paragraph 1. The authority citation for part 1 continues to read in part as follows:

Authority: 26 U.S.C. 7805 * * *

Par. 2. In § 1.988–1 paragraph (f) is revised to read as follows:

§ 1.988–1 Certain definitions and special rules.

* * * * *

(f) *Hyperinflationary currency*—(1) *Definition.* For purposes of section 988, a hyperinflationary currency means a currency described in § 1.985–1(b)(2)(ii)(D). However, the base period means the thirty-six calendar month period ending on the last day of the taxpayer's (or qualified business unit's) current taxable year. Thus, for example, if for 1996, 1997, and 1998, a country's annual inflation rates are 6 percent, 11 percent, and 90 percent, respectively, the cumulative inflation rate for the three-year base period is 124% $[((1.06 \times 1.11 \times 1.90) - 1.0 = 1.24) \times 100 = 124\%]$. Accordingly, assuming the QBU has a calendar year as its taxable year, the currency of the country is hyperinflationary for the 1998 taxable year.

(2) *Effective date.* Paragraph (f)(1) shall apply to transactions entered into after February 14, 2000.

* * * * *

Robert E. Wenzel,

Deputy Commissioner of Internal Revenue.

[FR Doc. 00–645 Filed 1–12–00; 8:45 am]

BILLING CODE 4830–01–P

DEPARTMENT OF DEFENSE

Office of the Secretary

32 CFR Part 199

Civilian Health and Medical Program of the Uniformed Services (CHAMPUS); Establishment of an Appeals Process for TRICARE Claimcheck Denials

AGENCY: Office of the Secretary, DoD.

ACTION: Proposed rule.

SUMMARY: This proposed rule implements section 714 of the National Defense Authorization Act for Fiscal Year 1999 which requires the establishment of an appeals process for denials by TRICARE Claimcheck (TCC) or any similar software system. This proposed rule enhances the current appeals process by adding an additional level of appeal conducted at the TRICARE Management Activity (TMA) and by codifying the entire process in this part.

DATES: Public comments must be received by March 13, 2000.

ADDRESSES: Forward comments to: TRICARE Management Activity (TMA), Medical Benefits and Reimbursement Systems, 16401 East Centretech Parkway, Aurora, CO 80011–9043.

FOR FURTHER INFORMATION CONTACT: Donald F. Wagner, Office of Appeals and Hearings, TMA, (303) 676–3411.

SUPPLEMENTARY INFORMATION: On December 30, 1998 (63 FR 71915), the Department of Defense published a notice in the **Federal Register**. That notice provides additional detailed information regarding TMA's use of TCC.

TMA, first used TCC, the TMA version of a commercial claims auditing software, in May 1996. Use of the TCC software has been subsequently linked to the start of the TRICARE regional at-risk managed care support contracts. TMA has customized TCC to conform to specific statutory and regulatory requirements for the TRICARE program.

TRICARE Claimcheck is a fully automated program that contains specific auditing logic designed to ensure appropriate coding on professional claims and eliminate overpayments on those claims. TRICARE Claimcheck audits for: unbundling of services (fragmented billing of services when one code is appropriate), incidental procedures, mutually exclusive procedures, assistant surgeon codes, duplicate claims submission, unlisted procedures, age/gender conflicts, medical visits associated with pre- and post-operative care, and cosmetic procedures.

The auditing logic resulting in a TCC denial on a TRICARE claim currently can be administratively reviewed by the TRICARE Managed Care Support Contractor (MCSC), but the specific dollar amount of an allowance (*e.g.,* the CHAMPUS Maximum Allowable Charge) is not formally appealable under TRICARE Claimcheck appeals or the appeals procedures established in 32 CFR 199.10. A determination by the MCSC that allows additional payment amounts results in an adjustment of the claim by the contractor with no further action required by the beneficiary or provider. No other appeal is currently allowed.

Section 714 of the National Defense Authorization Act for Fiscal Year 1999 (P.L. 105–261) required the establishment of an appeals process for denials by TCC or any similar software system. This proposed rule establishes a two-level appeals process for TCC denials and codifies it under the formal appeals procedures established in 32

CFR 199.10. TRICARE Managed Care Support Contractor conducts the first-level appeal. The second-level appeal is performed within the TMA.

We have also reinserted paragraphs (c)(1) through (c)(5) in section 199.10 which were inadvertently omitted in a previous publication of 32 CFR 199.10 and included other minor corrections to sections 199.10 and 199.15.

Regulatory Procedures

Executive Order 12866 requires that a comprehensive regulatory impact analysis be performed on any economically significant regulatory action, defined as one which would result in an annual effect of $100 million or more on the national economy or which would have other substantial impacts.

The Regulatory Flexibility Act (RFA) requires that each Federal agency prepare, and make available for public comment, a regulatory flexibility analysis when the agency issues a regulation which would have a significant impact on a substantial number of small entities.

This is not a significant regulatory action under EO 12866 and has been reviewed by the Office of Management and Budget. In addition, we certify that this proposed rule will not significantly affect a substantial number of small entities.

Paperwork Reduction Act

This rule, as written, imposes no burden as defined by the Paperwork Reduction Act of 1995. If however, any program implemented under this rule causes such a burden to be imposed, approval thereof will be sought from the Office of Management and Budget in accordance with the Act, prior to implementation.

List of Subjects in 32 CFR Part 199

Claims, Handicapped, Health insurance, and Military personnel.

Accordingly, 32 CFR part 199 is proposed to be amended as follows:

PART 199—[AMENDED]

1. The authority citation for part 199 continues to read as follows:

Authority: 5 U.S.C. 301; 10 U.S.C. Chapter 55.

2. Section 199.2(b) is proposed to be amended by revising the definition of *Party to the initial determination* and by adding a new definition of *TRICARE Claimcheck* and placing both definitions in alphabetical order as follows:

§ 199.2 Definitions.

* * * * *

Party to the initial determination. Includes CHAMPUS and also refers to a CHAMPUS beneficiary and a participating provider of services whose interests have been adjudicated by the initial determination. (Under TRICARE Claimcheck or other similar software, a party to the initial determination also includes a non-participating provider.) In addition, a provider who has been denied approval as an authorized CHAMPUS provider is a party to that initial determination, as is a provider who is disqualified or excluded as an authorized provider under CHAMPUS, unless the provider is excluded based on a determination of abuse or fraudulent practices or procedures under another federal or federally funded program. See § 199.10 for additional information concerning parties not entitled to administrative review under the CHAMPUS appeals and hearing procedures.

TRICARE Claimcheck. TRICARE Claimcheck is the TRICARE Management Activity version of a commercial claims auditing software designed to ensure appropriate coding on professional claims and eliminate overpayments on those claims.

* * * * *

3. Section 199.10 is proposed to be revised to read as follows:

§ 199.10 Appeal and hearing procedures.

(a) *General.* An appeal under CHAMPUS is an administrative review of program determinations made under the provisions of law and regulation. An appeal cannot challenge the propriety, equity, or legality of any provision of law or regulation. Paragraphs (a) through (e) of this section set forth the policies and procedures for appealing decisions made by OCHAMPUS and CHAMPUS contractors adversely affecting the rights and liabilities of CHAMPUS beneficiaries, CHAMPUS participating providers, and providers denied the status of authorized provider under CHAMPUS. Paragraph (f) of this section describes the appeal process for TRICARE Claimscheck or other similar software denials. Supplemental appeal procedures relating to determinations made under the quality and utilization review peer review organization program are contained in § 199.15.

(1) *Initial determination.* (i) *Notice of initial determination and right to appeal.* (A) OCHAMPUS and CHAMPUS contractors shall mail notices of initial determinations to the affected provider or CHAMPUS beneficiary (or representative) at the last known address. For beneficiaries who are under 18 years of age or who are incompetent, a notice issued to the parent, guardian, or other representative, under established CHAMPUS procedures, constitutes notice to the beneficiary.

(B) CHAMPUS contractors shall notify a provider of an initial determination on a claim only if the provider participated in the claim or the initial determination resulted from the application of TRICARE Claimcheck or other similar software. (See § 199.7)

(C) CHAMPUS peer review organizations shall notify providers and CHAMPUS contractors of a denial determination on a claim.

(D) Notice of an initial determination on a claim processed by a CHAMPUS contractor normally will be made on a CHAMPUS Explanation of Benefits (CEOB) form.

(E) Each notice of an initial determination on a request for benefit authorization, a request by a provider for approval as an authorized CHAMPUS provider, or a decision to disqualify or exclude a provider as an authorized provider under CHAMPUS shall state the reason(s) for the determination and the underlying facts supporting the determination.

(F) In any case when the initial determination is adverse to the beneficiary or participating provider, or to the provider seeking approval as an authorized CHAMPUS provider, the notice shall include a statement of the beneficiary's or provider's right to appeal the determination. The procedure for filing the appeal also shall be explained.

(ii) *Effect of initial determination.* The initial determination is final unless appealed in accordance with this section, or unless the initial determination is reopened by OCHAMPUS, the CHAMPUS contractor, or the CHAMPUS peer review organization.

(2) *Participation in an appeal.* Participation in an appeal is limited to any party to the initial determination, including OCHAMPUS, and authorized representatives of the parties. Any party to the initial determination, except OCHAMPUS, may appeal an adverse determination. The appealing party is the party to the initial determination who actually files the appeal, whether personally or by representative.

(i) *Parties to the initial determination.* For purposes of the CHAMPUS appeals and hearing procedures, the following are not parties to an initial determination and are not entitled to administrative review under this section.

(A) A provider disqualified or excluded as an authorized provider under CHAMPUS based on a

determination of abuse or fraudulent practices or procedures under another Federal or federally funded program is not a party to the CHAMPUS action and may not appeal under this section.

(B) A beneficiary who has an interest in receiving care or has received care from a particular provider cannot be an appealing party regarding the exclusion, suspension, or termination of the provider under § 199.9.

(C) A sponsor or parent of a beneficiary under 18 years of age or guardian of an incompetent beneficiary is not a party to the initial determination and may not serve as the appealing party.

(D) A third party, such as an insurance company, is not a party to the initial determination and is not entitled to appeal even though it may have an indirect interest in the initial determination.

(E) A nonparticipating provider is not a party to the initial determination and may not appeal.

(ii) *Representative.* Any party to the initial determination may appoint a representative to act on behalf of the party in connection with an appeal. Generally, the custodial parent of a minor beneficiary and the legally appointed guardian of an incompetent beneficiary shall be presumed to have been appointed representative without specific designation by the beneficiary. The custodial parent or legal guardian (appointed by a cognizant court) of a minor beneficiary may initiate an appeal based on the above presumption. However, should a minor beneficiary turn 18 years of age during the course of an appeal, then any further requests to appeal on behalf of the beneficiary must be from the beneficiary or pursuant to the written authorization of the beneficiary appointing a representative. For example, if the beneficiary is 17 years of age and the sponsor (who is a custodial parent) requests a formal review, absent written objection by the minor beneficiary, the sponsor is presumed to be acting on behalf of the minor beneficiary. Following the issuance of the formal review determination, the sponsor requests a hearing; however, if at the time of the request for a hearing, the beneficiary is 18 years of age or older, the request must either be by the beneficiary or the beneficiary's appointed representative. The sponsor, in this example, could not pursue the request for hearing without being appointed by the beneficiary as the beneficiary's representative.

(A) The representative shall have the same authority as the appealing party and notice given to the representative shall constitute notice to the appealing party.

(B) To avoid possible conflicts of interest, an officer or employee of the United States, such as an employee or member of a Uniformed Service, including an employee or staff member of a Uniformed Service legal office, or a CHAMPUS advisor, subject to the exceptions in 18 U.S.C. 205, is not eligible to serve as a representative. An exception usually is made for an employee or member of a Uniformed Service who represents an immediate family member. In addition, the Director, OCHAMPUS, or designee, may appoint an officer or employee of the United States as the CHAMPUS representative at a hearing.

(3) *Burden of proof.* The burden of proof is on the appealing party to establish affirmatively by substantial evidence the appealing party's entitlement under law and this part to the authorization of CHAMPUS benefits, approval of authorized CHAMPUS provider status, or removal of sanctions imposed under § 199.9. If a presumption exists under the provisions of this part or information constitutes *prima facie* evidence under the provisions of this part, the appealing party must produce evidence reasonably sufficient to rebut the presumption or *prima facie* evidence as part of the appealing party's burden of proof. CHAMPUS shall not pay any part of the cost or fee, including attorney fees, associated with producing or submitting evidence in support of an appeal.

(4) *Evidence in appeal and hearing cases.* Any relevant evidence may be used in the administrative appeal and hearing process if it is the type of evidence on which reasonable persons are accustomed to rely in the conduct of serious affairs, regardless of the existence of any common law or statutory rule that might make improper the admission of such evidence over objection in civil or criminal courts.

(5) *Late filing.* If a request for reconsideration, formal review, or hearing is filed after the time permitted in this section, written notice shall be issued denying the request. Late filing may be permitted only if the appealing party reasonably can demonstrate to the satisfaction of the Director, OCHAMPUS, or a designee, that the timely filing of the request was not feasible due to extraordinary circumstances over which the appealing party had no practical control. Each request for an exception to the filing requirement will be considered on its own merits. The decision of the Director, OCHAMPUS, or a designee, on the request for an exception to the filing requirement shall be final.

(6) *Appealable issue.* An appealable issue is required in order for an adverse determination to be appealed under the provisions of this section. Examples of issues that are not appealable under this section include:

(i) A dispute regarding a requirement of the law or regulation.

(ii) The amount of the CHAMPUS-determined allowable cost or charge, since the methodology for determining allowable costs or charges is established by this part.

(iii) The establishment of diagnosis-related groups (DRGs), or the methodology for the classification of inpatient discharges within the DRGs, or the weighting factors that reflect the relative hospital resources used with respect of discharges within each DRG, since each of these is established by this part.

(iv) Certain other issues on the basis that the authority for the initial determination is not vested in CHAMPUS. Such issues include but are not limited to the following examples:

(A) Determination of a person's eligibility as a CHAMPUS beneficiary is the responsibility of the appropriate Uniformed Service. Although OCHAMPUS and CHAMPUS contractors must make determinations concerning a beneficiary's eligibility in order to ensure proper disbursement of appropriated funds on each CHAMPUS claim processed, ultimate responsibility for resolving a beneficiary's eligibility rests with the Uniformed Services. Accordingly, disputed question of fact concerning a beneficiary's eligibility will not be considered an appealable issue under the provisions of this section, but shall be resolved in accordance with § 199.3.

(B) Similarly, decisions relating to the issuance of a Nonavailability Statement (DD Form 1251) in each case are made by the Uniformed Services. Disputes over the need for a Nonavailability Statement or a refusal to issue a Nonavailability Statement are not appealable under this section. The one exception is when a dispute arises over whether the facts of the case demonstrate a medical emergency for which a Nonavailability Statement is not required. Denial of payment in this one situation is an appealable issue.

(C) Any sanction, including the period of the sanction, imposed under § 199.9 which is based solely on a provider's exclusion or suspension by another agency of the Federal Government, a state, or a local licensing authority is not appealable under this section. The provider must exhaust

administrative appeal rights offered by the other agency that made the initial determination to exclude or suspend the provider. Similarly, any sanction imposed under § 199.9 which is based solely on a criminal conviction of civil judgment against the provider is not appealable under this section. If the sanction imposed under § 199.9 is not based solely on the provider's criminal conviction or civil judgment or on the provider's exclusion or suspension by another agency of the Federal government, a state, or a local licensing authority, that portion of the CHAMPUS administrative determination which is in addition to the criminal conviction/civil judgment or exclusion/suspension by the other agency may be appealed under this section.

(v) A decision by the Director, OCHAMPUS, or a designee, as a suspending official when the decision is final under § 199.9(h)(1)(iv)(A).

(7) *Amount in Dispute.* An amount in dispute is required for an adverse determination to be appealed under the provisions of this section, except as set forth in the following:

(i) The amount in dispute is calculated as the amount of money CHAMPUS would pay if the services and supplies involved in dispute were determined to be authorized CHAMPUS benefits. Examples of amounts of money that are excluded by the Regulation from CHAMPUS payments for authorized benefits include, but are not limited to:

(A) Amounts in excess of the CHAMPUS-determined allowable charge of cost.

(B) The beneficiary's CHAMPUS deductible and cost-share amounts.

(C)Amounts that the CHAMPUS beneficiary, or parent, guardian, or other responsible person has no legal obligation to pay.

(D) Amounts excluded under § 199.8.

(ii) The amount in dispute for appeals involving a denial of a request for authorization in advance of obtaining care shall be the estimated allowable charge or cost for the services(s) requested.

(iii) There is no requirement for an amount in dispute when the appealable issue involves a denial of a provider's request for approval as an authorized CHAMPUS provider or the determination to exclude, suspend, or terminate a provider's authorized CHAMPUS provider status.

(iv) Individual claims may be combined to meet the required amount in dispute if all of the following exist:

(A) The claims involve the same beneficiary.

(B) The claims involve the same issue.

(C) At least one of the combined claims has had a reconsideration decision issued by a CHAMPUS contractor or a CHAMPUS peer review organization.

Note to paragraph (a)(7): A request for administrative review under this appeal process which involves a dispute regarding a requirement of law or regulation (paragraph (a)(6)(i) of this section) or does not involve a sufficient amount in dispute (paragraph (a)(7) of this section) may not be rejected at the reconsideration level of appeal. However, an appeal shall involve an appealable issue and sufficient amount in dispute under these paragraphs to be granted a formal review or hearing.

(8) *Levels of appeal.* The sequence and procedures of a CHAMPUS appeal vary, depending on whether the initial determination was made by OCHAMPUS, a CHAMPUS contractor, or a CHAMPUS peer review organization.

(i) Appeal levels for initial determination made by CHAMPUS contractor or CHAMPUS peer review organization.

(A) Reconsideration by CHAMPUS contractor or CHAMPUS peer review organization.

(B) Formal review by OCHAMPUS (except for CHAMPUS peer review organization reconsiderations and reconsideration determinations issued by CHAMPUS contractors that are subject to § 199.15).

(C) Hearing.

(ii) Appeal levels for initial determination made by OCHAMPUS.

(A) Formal review by OCHAMPUS except initial determinations involving the suspension of claims processing where the Director, OCHAMPUS, or a designee, determines that additional proceedings are necessary as to disputed material facts and the suspending official's decision is not final under § 199.9(h)(1)(iv)(A) or § 199.9(h)(2) initial determinations involving the sanctioning (exclusion, suspension, or termination) of CHAMPUS providers. Initial determinations involving these matters shall be appealed directly to the hearing level.

(B) Hearing.

(9) *Appeal decision.* An appeal decision at any level may address all pertinent issues which arise under the appeal or are otherwise presented by the information in the case record (for example, the entire episode of care in the appeal), and shall not be limited to addressing the specific issue appealed by a party. In the case of sanctions imposed under § 199.9, the final decision may affirm, increase or reduce the sanction period imposed by CHAMPUS, or otherwise modify or reverse the imposition of the sanction.

(10) *Dismissal of request for reconsideration, formal review, or hearing.* (i) *By application of the appealing party.* A request for reconsideration, formal review, or hearing may be dismissed by the Director, OCHAMPUS, or a designee, at any time before the mailing of the final decision, upon the application of the appealing party. A request for dismissal must be in writing and filed with the Chief, Office of Appeals and Hearings, OCHAMPUS or designee, or the hearing officer in hearing cases. When dismissal is requested, the previous determination in the case shall be deemed final, unless the dismissal is vacated in accordance with paragraph (a)(10)(v) of this section.

(ii) *By stipulation of the parties.* A request for a reconsideration, formal review, or hearing may be dismissed by the Director, OCHAMPUS, or a designee, at any time before the mailing of notice of the reconsideration determination, formal review determination, or hearing final decision under a stipulation agreement between the appealing party and the Director, OCHAMPUS, or designee. When a dismissal is entered under a stipulation, the previous determination shall be deemed final, unless the dismissal is vacated in accordance with paragraph (a)(10)(v) of this section.

(iii) *By abandonment.* The Director, OCHAMPUS, or a designee, may dismiss a request for reconsideration, formal review, or hearing upon abandonment by the appealing party.

(A) An appealing party shall be deemed to have abandoned a request for hearing, other than when personal appearance is waived in accordance with § 199.10(d)(10)(xii), if neither the appealing party nor an appointed representative appears at the time and placed fixed for the hearing and if, within 10 days after the mailing of a notice by certified mail to the appealing party by the hearing officer to show cause, such party does not show good and sufficient cause for such failure to appear and failure to notify the hearing officer before the time fixed for the hearing that an appearance could not be made.

(B) An appealing party shall be deemed to have abandoned a request for reconsideration, formal review, or hearing if, before mailing of the notice of the reconsideration determination or formal review determination or before assignment of the case to the hearing officer, the Director, OCHAMPUS, or a designee, is unable to locate either the appealing party or an appointed representative.

(C) An appealing party shall be deemed to have abandoned a request for

reconsideration, formal review, or hearing if the appealing party fails to prosecute the appeal. Failure to prosecute the appeal includes, but is not limited to, an appealing party's failure to provide information reasonably requested by the Director, OCHAMPUS, or a designee, or the hearing officer for consideration in the appeal.

(D) If the Director, OCHAMPUS, or a designee, dismisses the request for reconsideration, formal review, or hearing because of abandonment, the previous determination in the case shall be deemed to be final, unless the dismissal is vacated in accordance with paragraph (a)(10)(v) of this section.

(iv) *For cause.* If the Director, OCHAMPUS, or a designee, may dismiss for cause a request for reconsideration, formal review, or hearing either entirely or as to any stated issue. If the Director, OCHAMPUS, or a designee, dismisses a reconsideration, formal review, or hearing request for cause, the previous determination in the case shall be deemed to be final, unless the dismissal is vacated in accordance with paragraph (a)(10)(v) of this section. A dismissal for cause may be issued under any of the following circumstances:

(A) When the appealing party requesting the reconsideration, formal review, or hearing is not a proper party under paragraph (a)(2)(i) of this section, or does not otherwise have a right to participate in a reconsideration, formal review, or hearing.

(B) When the appealing party who filed the reconsideration, formal review, or hearing request dies, and there is no information before the Director, OCHAMPUS, or a designee, showing that a party to the initial determination who is not an appealing party may be prejudiced by the previous determination.

(C) When the issue is not appealable (see § 199.10(a)(6)).

(D) When the amount in dispute is less than $50 in a formal review or less than $300 in a hearing.

(E) When all appealable issues have been resolved in favor of the appealing party.

(v) *Vacation of dismissal.* Dismissial of a request for reconsideration, formal review, or hearing may be vacated by the Director, OCHAMPUS, or a designee, upon written request of the appealing party, if the request is received within 6 months of the date of the notice of dismissal mailed to the last known address of the party requesting the reconsideration, formal review, or hearing.

(b) *Reconsideration.* Any party to the initial determination made by the CHAMPUS contractor or a CHAMPUS peer review organization may request a reconsideration.

(1) *Requesting a reconsideration.* (i) *Written request required.* The request must be in writing, shall state the specific matter in dispute, and shall include a copy of the notice of initial determination (such as the CEOB form) made by the CHAMPUS contractor or the CHAMPUS peer review organization.

(ii) *Where to file.* The request shall be submitted to the office that made the initial determination (*i.e.,* the CHAMPUS contractor or the CHAMPUS peer review organization) or any other CHAMPUS contractor designated in the notice of initial determination.

(iii) *Allowed time to file.* The request must be mailed within 90 days after the date of the notice of initial determination.

(iv) *Official filing date.* A request for a reconsideration shall be deemed filed on the date it is mailed and postmarked. For the purposes of CHAMPUS, a postmark is a cancellation mark issued by the United States Postal Service. If the request does not have a postmark, it shall be deemed filed on the date received by the CHAMPUS contractor or the CHAMPUS peer review organization.

(2) *The reconsideration process.* The purpose of the reconsideration is to determine whether the initial determination was made in accordance with law, regulation, policies, and guidelines in effect at the time the care was provided or requested, or at the time of the initial determination and/or reconsideration decision involving a provider request for approval as an authorized provider under CHAMPUS. The reconsideration is performed by a member of the CHAMPUS contractor or the CHAMPUS peer review organization staff who was not involved in making the initial determination and is a thorough and independent review of the case. The reconsideration is based on the information submitted that led to the initial determination, plus any additional information that the appealing party may submit or the CHAMPUS contractor or the CHAMPUS peer review organization may obtain.

(3) *Timeliness of reconsideration determination.* The CHAMPUS contractor or the CHAMPUS peer review organization normally shall issue its reconsideration determination no later than 60 days from the date of receipt of the request for reconsideration by the CHAMPUS contractor or the CHAMPUS peer review organization.

(4) *Notice of reconsideration determination.* The CHAMPUS contractor or the CHAMPUS peer review organization shall issue a written notice of the reconsideration to the appealing party at his or her last known address. The notice of the reconsideration must contain the following elements:

(i) A statement of the issues or issue under appeal.

(ii) The provisions of law, regulation, policies, and guidelines that apply to the issue or issues under appeal.

(iii) A discussion of the original and additional information that is relevant to the issue or issues under appeal.

(iv) Payment and liability under § 199.4(h), if applicable.

(v) Whether the reconsideration determination upholds the initial determination or reverses it, in whole or in part, and the rationale for the action.

(vi) A statement of the right to appeal further in any case when the reconsideration determination is less than fully favorable to the appealing party and the amount in dispute in $50 or more.

(5) *Effect of reconsideration determination.* The reconsideration determination is final if the following exits:

(i) The amount in dispute is less than $50.

(ii) Appeal rights have been offered, but a request for formal review (or hearing in a case subject to § 199.15) is not postmarked or received by OCHAMPUS within 60 days of the date of the notice of the reconsideration determination.

(c) *Formal review.* Except as explained in this paragraph, any party to an initial determination made by OCHAMPUS, or a reconsideration determination made by the CHAMPUS contractor may request a formal review by OCHAMPUS if the party is dissatisfied with the initial or reconsideration determination unless the initial or reconsideration determination:

(1) Is final under paragraph (b)(5) of this section.

(2) Involves the sanctioning of a provider by the exclusion, suspension or termination of authorized provider status;

(3) Involves a written decision issued pursuant to § 199.9(h)(l)(iv)(A) regarding the temporary suspension of claims processing; or

(4) Involves a reconsideration determination by a CHAMPUS peer review organization. A hearing, but not a formal review level of appeal, may be available to a party to an initial determination involving the sanctioning of a provider or to a party to a written decision involving a temporary

suspension of claims processing. A beneficiary (or an authorized representative of a beneficiary), but not a provider (except as provided in § 199.15), may request a hearing, but not a formal review, of a reconsideration determination made by a CHAMPUS peer review organization.

(5) *Requesting a formal review.* (i) *Written request required.* The request must be in writing, shall state the specific matter in dispute, shall include copies of the written determination (notice of reconsideration determination or OCHAMPUS initial determination) being appealed, and shall include any additional information or documents not submitted previously.

(ii) *Where to file.* The request shall be submitted to the Chief, Office of Appeals and Hearings, TRICARE Management Activity, 16401 East Centretech Parkway, Aurora, Colorado 80011–9043.

(iii) *Allowed time to file.* The request shall be mailed within 60 days after the date of the notice of the reconsideration determination or OCHAMPUS initial determination being appealed.

(iv) *Official filing date.* A request for a formal review shall be deemed filed on the date it is mailed and postmarked. For the purposes of CHAMPUS, a postmark is a cancellation mark issued by the United States Postal Service. If the request does not have a postmark, it shall be deemed filed on the date received by OCHAMPUS.

(6) *The formal review process.* The purpose of the formal review is to determine whether the initial determination or reconsideration determination was made in accordance with law, regulation, policies, and guidelines in effect at the time the care was provided or requested or at the time of the initial determination, reconsideration, or formal review decision involving a provider request for approval as an authorized CHAMPUS provider. The formal review is performed by the Chief, Office of Appeals and Hearings, OCHAMPUS, or a designee, and is a thorough review of the case. The formal review determination shall be based on the information upon which the initial determination and/or reconsideration determination was based, and any additional information the appealing party may submit or OCHAMPUS may obtain.

(7) *Timeliness of formal review determination.* The Chief, Office of Appeals and Hearings, OCHAMPUS, or a designee, normally shall issue the formal review determination no later than 90 days from the date of receipt of the request for formal review by the OCHAMPUS.

(8) *Notice of formal review determination.* The Chief, Office of Appeals and Hearings, OCHAMPUS, or a designee, shall issue a written notice of the formal review determination to the appealing party at his or her last known address. The notice of the formal review determination must contain the following elements:

(i) A statement of the issue or issues under appeal.

(ii) The provisions of law, regulation, policies, and guidelines, that apply to the issue or issues under appeal.

(iii) A discussion of the original and additional information that is relevant to the issue or issues under appeal.

(iv) Whether the formal review upholds the prior determination or determinations or reverses the prior determination or determinations in whole or in part and the rationale for the action.

(v) A statement of the right to request a hearing in any case when the formal review determination is less than fully favorable, the issue is appealable,and the amount in dispute is $300 or more.

(9) *Effect of formal review determinations.* The formal review determination is final if one or more of the following exist:

(i) The issue is not appealable. (See paragraph (a)(6) of this section.)

(ii) The amount in dispute is less than $300. (See paragraph (a)(7) of this section.)

(iii) Appeal rights have been offered but a request for hearing is not postmarked or received by OCHAMPUS within 60 days of the date of the notice of the formal review determination.

(d) *Hearing.* Any party to the initial determination may request a hearing if the party is dissatisfied with the formal review determination and the formal review determination is not final under the provisions of paragraph (c)(9), of this section; or the initial determination involves the sanctioning of a provider under § 199.9 and involves an appealable issue; or the reconsideration determination is issued by a CHAMPUS peer review organization under § 199.15 and is not final under paragraph (b)(5) of this section.

(1) *Requesting a hearing.* (i) *Written request required.* The request shall be in writing, state the specific matter in dispute, include a copy of the initial determination, reconsideration determination, or formal review determination being appealed, and include any additional information or documents not submitted previously.

(ii) *Where to file.* The request shall be submitted to the Chief, Office of Appeals and Hearings, TRICARE Management Activity, 16401 East Centretech Parkway, Aurora, Colorado 80011–9043.

(iii) *Allowed time to file.* The request shall be mailed within 60 days after the date of the notice of the initial determination or formal review determination being appealed.

(iv) *Official filing date.* A request for hearing shall be deemed filed on the date it is mailed and postmarked. For the purposes of CHAMPUS, a postmark is a cancellation mark issued by the United States Postal Service. If a request for hearing does not have a postmark, it shall be deemed filed on the day received by OCHAMPUS.

(2) *Hearing process.* A hearing is an administrative proceeding in which facts relevant to the appealable issue(s) in the case are presented and evaluated in relation to applicable law, regulation, policies, and guidelines in effect at the time the care in dispute was provided or requested; at the time of the initial determination, formal review determination, or hearing decision involving a provider request for approval under CHAMPUS as an authorized provider; or at the time of the act or event which is the basis for the imposition of sanctions under this part. A hearing, except for an appeal involving a provider sanction, generally shall be conducted as a nonadversial, administrative proceeding. However, an authorized party to any hearing, including CHAMPUS, may submit additional evidence or testimony relevant to the appealable issue(s) and may appoint a representative, including legal counsel, to participate in the hearing process.

(3) *Timeliness of hearing.* (i) Except as otherwise provided in this section, within 60 days following receipt of a request for hearing, the Director, OCHAMPUS, or a designee, normally will appoint a hearing officer to hear the appeal. Copies of all records in the possession of OCHAMPUS that are pertinent to the matter to be heard or that formed the basis of the formal review determination shall be provided to the hearing officer and, upon request, to the appealing party.

(ii) The hearing officer, except as otherwise provided in this section, normally shall have 60 days from the date of written notice of assignment to review the file, schedule and hold the hearing, and issue a recommended decision to the Director, OCHAMPUS, or designee.

(iii) The Director, OCHAMPUS, or designee, may delay the case assignment to the hearing officer if additional information is needed that cannot be

obtained and included in the record within the time period specified above. The appealing party will be notified in writing of the delay resulting from the request for additional information. The Director, OCHAMPUS, or a designee, in such circumstances, will assign the case to a hearing officer within 30 days of receipt of all such additional information, or within 60 days of receipt of the request for hearing, whichever shall occur last.

(iv) The hearing officer may delay submitting the recommended decision if, at the close of the hearing, any party to the hearing requests that the record remain open for submission of additional information. In such circumstances, the hearing officer will have 30 days following receipt of all such additional information including comments from the other parties to the hearing concerning the additional information to submit the recommended decision to the Director, OCHAMPUS, or a designee.

(4) *Representation at a hearing.* Any party to the hearing may appoint a representative to act on behalf of the party at the hearing, unless such person currently is disqualified or suspended from acting in another Federal administrative proceeding, or unless otherwise prohibited by law, this part, or any other DoD regulation (see paragraph (a)(2)(ii) of this section). A hearing officer may refuse to allow any person to represent a party at the hearing when such person engages in unethical, disruptive, or contemptuous conduct, or intentionally fails to comply with proper instructions or requests of the hearing officer, or the provisions of this part. The representative shall have the same authority as the appealing party and notice given to the representative shall constitute notice required to be given to the appealing party.

(5) *Consolidation of proceedings.* The Director, OCHAMPUS, or a designee, may consolidate any number of proceedings for hearing when the facts and circumstances are similar and no substantial right of an appealing party will be prejudiced.

(6) *Authority of the hearing officer.* The hearing officer in exercising the authority to conduct a hearing under this part will be bound by 10 U.S.C. Chapter 55 and this part. The hearing officer in addressing substantive, appealable issues shall be bound by policy manuals, instructions, procedures, and other guidelines issued by the ASD(HA), or a designee, or by the Director, OCHAMPUS, or a designee, in effect for the period in which the matter in dispute arose. A hearing officer may not establish or amend policy, procedures, instructions, or guidelines. However, the hearing officer may recommend reconsideration of the policy, procedures, instructions or guidelines by the ASD(HA), or a designee, when the final decision is issued in the case.

(7) *Disqualification of hearing officer.* A hearing officer shall voluntarily disqualify himself or herself and withdraw from any proceeding in which the hearing officer cannot given fair or impartial hearing, or in which there is a conflict of interest. A party to the hearing may request the disqualification of a hearing officer by filing a statement detailing the reasons the party believes that a fair and impartial hearing cannot be given or that a conflict of interest exists. Such request shall be immediately sent by the appealing party or the hearing officer to the Director, OCHAMPUS, or a designee, who shall investigate the allegations and advise the complaining party of the decision in writing. A copy of such decision also shall be mailed to all other parties of the decision in writing. A copy of such decision also shall be mailed to all other parties to the hearing. If the Director, OCHAMPUS, or a designee, reassigns the case to another hearing officer, no investigation shall be required.

(8) *Notice and scheduling of hearing.* The hearing officer shall issued by certified mail, when practicable, a written notice to the parties to the hearing of the time and place for the hearing. Such notice shall be mailed at least 15 days before the scheduled date of the hearing. The notice shall contain sufficient information about the hearing procedure, including the party's right to representation, to allow for effective preparation. The notice also shall advise the appealing party of the right to request a copy of the record before the hearing. Additionally, the notice shall advise the appealing party of his or her responsibility to furnish the hearing officer, no later than 7 days before the scheduled date of the hearing, a list of all witnesses who will testify and a copy of all additional information to be presented at the hearing. The time and place of the hearing shall be determined by the hearing officer, who shall select a reasonable time and location mutually convenient to the appealing party and OCHAMPUS.

(9) *Preparation for hearing.* (i) *Prehearing statement of contentions.* The hearing officer may on reasonable notice require a party to the hearing to submit a written statement of contentions and reasons. The written statement shall be provided to all parties to the hearing before the hearing takes place.

(ii) *Discovery.* Upon the written request of a party to the initial determination (including OCHAMPUS) and for good cause shown, the hearing officer will allow that party to inspect and copy all document, unless privileged, relevant to issues in the proceeding that are in the possession or control of the other party participating in the appeal. The written request shall state clearly what information and documents are required for inspection and the relevance of the documents to the issues in the proceeding. Depositions, interrogatories, requests for admissions, and other forms of prehearing discovery are generally not authorized and the Department of Defense does not have subpoena authority for purposes of administrative hearings under this section. If the hearing officer finds that good cause exists for taking a deposition or interrogatory, the expense shall be assessed to the requesting party, with copies furnished to the hearing officer and the other parties to the hearing.

(iii) *Witnesses and evidence.* All parties to a hearing are responsible for producing, at each party's expense, meaning without reimbursement of payment by CHAMPUS, witnesses and other evidence in their own behalf, and for furnishing copies of any such documentary evidence to the hearing officer and other party or parties to the hearing. The Department of Defense is not authorized to subpoena witnesses or records. The hearing officer may issue invitations and requests to individuals to appear and testify without cost to the Government, so that the full facts in the case may be presented.

(10) *Conduct of hearing.* (i) *Right to open hearing.* Because of the personal nature of the matters to be considered, hearings normally shall be closed to the public. However, the appealing party may request an open hearing. If this occurs, the hearing shall be open except when protection of other legitimate Government purposes dictates closing certain portions of the hearing.

(ii) *Right to examine parties to the hearing and their witnesses.* Each party to the hearing shall have the right to produce and examine witnesses, to introduce exhibits, to question opposing witnesses on any matter relevant to the issue even though the matter was not covered in the direct examination, to impeach any witness regardless of which party to the hearing first called the witness to testify, and to rebut any evidence presented. Except as to those witnesses employed by OCHAMPUS at the time of the hearing, and records in

the possession of OCHAMPUS, a party to a hearing shall be responsible for the cost of fee associated with producing witnesses and other evidence in the party's own behalf, and for furnishing copies of documentary evidence to the hearing officer and other party or parties to the hearing.

(iii) *Taking of evidence.* The hearing officer shall control the taking of evidence in a manner best suited to ascertain the facts and safeguard the rights of the parties to the hearing. Before taking evidence, the hearing officer shall identify and state the issues in dispute on the record and the order in which evidence will be received.

(iv) *Questioning and admission of evidence.* A hearing officer may question any witness and shall admit any relevant evidence. Evidence that is irrelevant or unduly repetitions shall be excluded.

(v) *Relevant evidence.* Any relevant evidence shall be admitted, unless unduly repetitious, if it is the type of evidence on which reasonable persons are accustomed to rely in the conduct of serious affairs, regardless of the existence of any common law or statutory rule that might make improper the admission of such evidence over objection in civil or criminal actions.

(vi) *CHAMPUS determination first.* The basis of the CHAMPUS determinations shall be presented to the hearing officer first. The appealing party shall then be given the opportunity to establish affirmatively why this determination is held to be in error.

(vii) *Testimony.* Testimony shall be taken only on oath or affirmation on penalty of perjury.

(viii) *Oral argument and briefs.* At the request of any party to the hearing made before the close of the hearing, the hearing officer shall grant oral argument. If written argument is requested, it shall be granted, and the parties to the hearing shall be advised as to the time and manner within which such argument is to be filed. The hearing officer may require any party to the hearing to submit written memoranda pertaining to any or all issues raised in the hearing.

(ix) *Continuance of hearing.* A hearing officer may continue a hearing to another time or place on his or her own motion or, upon showing of good cause, at the request of any party. Written notice of the time and place of the continued hearing, except as otherwise provided here, shall be in accordance with this part. When a continuance is ordered during a hearing, oral notice of the time and place of the continued hearing may be given to each party to the hearing who is present at the hearing.

(x) *Continuance for additional evidence.* If the hearing officer determines, after a hearing has begun, that additional evidence is necessary for the proper determination of the case, the following procedure may be invoked:

(A) *Continue hearing.* The hearing may be continued to a later date in accordance with § paragraph (d)(10)(ix) of this section.

(B) *Closed hearing.* The hearing may be closed, but the record held open in order to permit the introduction of additional evidence. Any evidence submitted after the close of the hearing shall be made available to all parties to the hearing, and all parties to the hearing shall have the opportunity for comment prior to the issuance of the recommended decision by the hearing officer. The hearing officer may reopen the hearing if any portion of the additional evidence makes further hearing desirable. Notice thereof shall be given in accordance with paragraph (d)(8) of this section.

(xi) *Transcript of hearing.* A verbatim taped record of the hearing shall be made and shall become a permanent part of the record. Upon request, the appealing party shall be furnished a duplicate copy of the tape. A typed transcript of the testimony will be made only when determined to be necessary by OCHAMPUS. If a typed transcript is made, upon request, the appealing party shall be furnished a copy without charge. Corrections shall be allowed in the typed transcript by the hearing officer solely for the purpose of conforming the transcript to the actual testimony.

(xii) *Waiver of right to appear and present evidence.* A party may waive his or her right to appear at a hearing and present evidence. If all parties waive their right to appear before the hearing officer for presenting evidence and contentions personally or by representation, it will not be necessary for the hearing officer to give notice of, or to conduct a formal hearing. A waiver of the right to appear must be in writing and filed with the hearing officer or the Chief, Office of Appeals and Hearings, OCHAMPUS. Such waiver may be withdrawn by the party by written notice received by the hearing officer or Chief, Office of Appeals and Hearings, no later than 7 days before the scheduled hearing or the mailing of notice of the final decision, whichever occurs first. For purposes of this section, failure of a party to appear personally or by representation after filing written notice of waiver, will not be cause for finding of abandonment and the hearing officer shall make the recommended decision on the basis of all evidence of record.

(11) Recommended decision. At the conclusion of the hearing and after the record has been closed, the matter shall be taken under consideration by the hearing officer. Within the time frames previously set forth in this section, the hearing officer shall submit to the Director, OCHAMPUS, or a designee, a written recommended decision containing a statement of findings and a statement of reasons based on the evidence adduced at the hearing and otherwise included in the hearing record.

(i) *Statement of findings.* A statement of findings is a clear and concise statement of fact evidenced in the record or conclusions that readily can be deduced from the evidence of record. Each finding must be supported by substantial evidence that is defined as such evidence as a reasonable mind can accept as adequate to support a conclusion.

(ii) *Statement of reasons.* A reason is a clear and concise statement of law, regulation, policies, or guidelines relating to the statement of findings that provides the basis for the recommended decision.

(e) *Final decision.* (1) *Director, OCHAMPUS.* The recommended decision shall be reviewed by the Director, OCHAMPUS, or a designee, who shall adopt or reject the recommended decision or refer the recommended decision for review by the Assistant Secretary of Defense (Health Affairs). The Director, OCHAMPUS, or a designee, normally will take action with regard to the recommended decision within 90 days of receipt of the recommended decision or receipt of the revised recommended decision following a remand order to the Hearing Officer.

(i) *Final action.* If the Director, OCHAMPUS, or a designee, concurs in the recommended decision, no further agency action is required and the recommended decision, as adopted by the Director, OCHAMPUS, is the final agency decision in the appeal. In the case of rejection, the Director, OCHAMPUS, or a designee, shall state the reason for disagreement with the recommended decision and the underlying facts supporting such disagreement. In these circumstances, the Director, OCHAMPUS, or a designee, may have a final decision prepared based on the record, or may remand the matter to the Hearing Officer for appropriate action. In the latter instance, the Hearing Officer shall take appropriate action and submit a new

recommended decision within 60 days of receipt of the remand order. The decision by the Director, OCHAMPUS, or a designee, concerning a case arising under the procedures of this section, shall be the final agency decision and the final decision, together with a copy of the recommended decision, shall be sent by certified mail to the appealing party or parties. A final agency decision under paragraph (e)(1)(i) of this section will not be relied on, used, or cited as precedent by the Department of Defense in the administration of CHAMPUS.

(ii) *Referral for review by ASD(HA).* The Director, OCHAMPUS, or a designee, may refer a hearing case to the Assistant Secretary of Defense (Health Affairs) when the hearing involves the resolution of CHAMPUS policy and issuance of a final decision which may be relied on, used, or cited as precedent in the administration of CHAMPUS. In such a circumstance, the Director, OCHAMPUS, or a designee, shall forward the recommended decision, together with the recommendation of the Director, OCHAMPUS, or a designee, regarding disposition of the hearing case.

(2) *ASD(HA).* The ASD(HA), or a designee, after reviewing a case arising under the procedures of this section may issue a final decision based on the record in the hearing case or remand the case to the Director, OCHAMPUS, or a designee, for appropriate action. A decision issued by the ASD(HA), or a designee, shall be the final agency decision in the appeal and the final decision, together with a copy of the recommended decision, shall be sent by certified mail to the appealing party or parties. A final decision of the ASD(HA), or a designee, issued under this paragraph (e)(2) may be relied on, used, or cited as precedent in the administration of CHAMPUS.

(f) *TRICARE Claimcheck or other similar software.* (1) *General.* This sets forth the policies and procedures for appealing adverse determinations issued as a result of the application of TRICARE Claimcheck or other similar software. The TRICARE Claimcheck or other similar software appeal procedures apply to denial or reduction in payment based on approved reimbursement methods; whereas, denials arising from TRICARE Claimcheck or other similar software relating to benefit determinations are subject to the appeal process in paragraphs (a) through (e) of this section. Non-participating providers may appeal only through the TRICARE Claimcheck or other similar software appeal procedures described in this paragraph (f). The levels of appeal under the TRICARE Claimcheck or other similar software appeal procedures are: First-level appeal, issued by the CHAMPUS contractor; and second-level appeal, issued by OCHAMPUS. Provisions in paragraph (a)(10) of this section that apply to the dismissal of reconsideration and formal review determinations also apply to dismissal of first and second level appeals.

(i) *Initial determination.* (A) *Notice of initial determination and right to appeal.* (*1*) CHAMPUS contractors shall mail notices of initial determinations to the affected provider or CHAMPUS beneficiary (or representative) at the last known address. For beneficiaries who are under 18 years of age or who are incompetent, a notice issued to the other parent, guardian, or other representative, under established CHAMPUS procedures, constitutes notice to the beneficiary.

(*2*) Notice of an initial determination on a claim processed by a CHAMPUS contractor will be made on a CHAMPUS Explanation of Benefits (CEOB) form.

(*3*) Each CEOB shall state the reason for the determination.

(*4*) In any case when the initial determination is adverse to the beneficiary or provider, the CEOB shall include a statement of the beneficiary's or provider's right to appeal the determination. The procedure for filing a first-level appeal shall also be explained.

(B) *Effect of initial determination.* The initial determination is final unless appealed in accordance with this paragraph (f) or unless the initial determination is reopened by OCHAMPUS or the CHAMPUS contractor.

(ii) *Participation in an appeal.* Participation in an appeal is limited to any party to the initial determination, including OCHAMPUS, and authorized representatives of the parties. Any party to the initial determination, except OCHAMPUS, may appeal an adverse determination.

(A) *Parties to the initial determination.* For purposes of this appeal procedure, the following are not parties to an initial determination and are not entitled to administrative review under this paragraph (f).

(*1*) A sponsor or parent of a beneficiary under 18 years of age or guardian of an incompetent beneficiary is not a party to the initial determination and may not serve as the appealing party.

(*2*) A third party, such as an insurance company, is not a party to the initial determination and is not entitled to appeal even though it may have an indirect interest in the initial determination.

(B) *Representative.* Any party to the initial determination may appoint a representative to act on behalf of the party in connection with an appeal. Generally, the custodial parent of a minor beneficiary and the legally appointed guardian of an incompetent beneficiary shall be presumed to have been appointed representative without specific designation by the beneficiary. The custodial parent or legal guardian (appointed by a cognizant court) of a minor beneficiary may initiate an appeal based on the above presumption. However, should a minor beneficiary turn 18 years of age during the course of an appeal, then any further requests to appeal on behalf of the beneficiary must be from the beneficiary or pursuant to the written authorization of the beneficiary appointing a representative. For example, if the beneficiary is 17 years of age and the sponsor (who is a custodial parent) requests a first-level appeal, absent written objection by the minor beneficiary, the sponsor is presumed to be acting on behalf of the minor beneficiary. Following the issuance of the first-level appeal determination, the sponsor requests a second-level appeal; however, if at the time of the request for a second-level appeal, the beneficiary is 18 years of age or older, the request must either be by the beneficiary or the beneficiary's appointed representative. The sponsor, in this example, could not pursue the request for a second-level appeal without being appointed by the beneficiary as the beneficiary's representative.

(*1*) The representative shall have the same authority as the appealing party and notice given to the representative shall constitute notice to the appealing party.

(*2*) To avoid possible conflicts of interest, an officer or employee of the United States, such as an employee or member of a Uniformed Service, including an employee or staff member of a Uniformed Service legal office, or a CHAMPUS advisor, subject to the exceptions in 18 U.S.C. 205, is not eligible to serve as a representative. An exception usually is made for an employee or member of a Uniformed Service who represents an immediate family member.

(iii) *Burden of proof.* The burden of proof is on the appealing party to establish affirmatively by substantial evidence the appealing party's entitlement under law and this part to the authorization of CHAMPUS benefits. If a presumption exists under the provisions of this part or information

constitutes *prima facie* evidence under the provisions of this part, the appealing party must produce evidence reasonably sufficient to rebut the presumption or *prima facie* evidence as part of the appealing party's burden of proof. CHAMPUS shall not pay any part of the cost or fee, including attorney fees, associated with producing or submitting evidence in support of an appeal.

(iv) *Evidence in appeal cases.* Any relevant evidence may be sued in the TRICARE Claimcheck or other similar software appeal process if it is the type of evidence on which reasonable persons are accustomed to rely in the conduct of serious affairs, regardless of the existence of any common law or statutory rule that might improper the admission of such evidence over objection in civil or criminal courts.

(v) *Late filing.* If a request for a first-level or second-level appeal is filed after the time permitted in this section, written notice shall be issued denying the request. Late filing may be permitted only if the appealing party reasonably can demonstrate to the satisfaction of the Director, OCHAMPUS, or a designee, that the timely filing of the request was not feasible due to the extraordinary circumstances over which the appealing party had no practical control. Each request for an exception to the filing requirement will be considered on its own merits. The decision of the Director, OCHAMPUS, or a designee, on the request for an exception to the filing requiring shall be final.

(vi) *Appealable issue.* An appealable issue is required in order for an adverse determination to be appealed under the provisions of this paragraph (f).

(vii) *Amount in dispute.* An amount in dispute is required for an adverse determination to be appealed under the provisions of this paragraph (f). The amount in dispute is calculated as the amount of money CHAMPUS would pay if the services and supplies involved in dispute were determined to be authorized CHAMPUS benefits. Examples of amounts of money that are excluded by the Regulation from CHAMPUS payments for authorized benefits included but are not limited to:

(A) The beneficiary's CHAMPUS deductible and cost-share amounts.

(B) Amounts that the CHAMPUS beneficiary, or parent, guardian, or other responsible person has no legal obligation to pay.

(C) Amounts excluded under § 199.8.

(viii) *Scope of review.* The review of appeals under this paragraph (f) may identify issues other than TRICARE Claimcheck or other similar software issues, which may be considered under other provisions of this part.

(2) *TRICARE Claimcheck or other similar software first-level appeal.* Any party to the initial determination made by the CHAMPUS contractor, may request a first-level appeal.

(i) *Requesting a first-level appeal.* (A) *Written request required.* The request must be in writing, shall state the specific matter in dispute, and shall include a copy of the CEOB issued by the CHAMPUS contractor.

(B) *Where to file.* The request shall be submitted to the CHAMPUS contractor that issued the CEOB or any other CHAMPUS contractor designated in the CEBO.

(C) *Allowed time to file.* The request must be mailed within 90 days after the date of notice on the CEOB.

(D) *Official filing date.* A request for a first-level appeal shall be deemed filed on the date it is mailed and postmarked. For the purposes of CHAMPUS, a postmark is a cancellation mark issued by the United States Postal Service. If the request does not have a postmark, it shall be deemed filed on the date received by the CHAMPUS contractor.

(ii) *The first-level appeal process.* The purpose of the first-level appeal is to determine whether the initial determination correctly identified improper claims. The first-level appeal review is performed by a member of the CHAMPUS contractor who was not involved in making the initial determination and is a thorough and independent review of the case. The first-level appeal is based on the information submitted that led to the initial determination, plus any additional information that the appealing party may submit or the CHAMPUS contractor may obtain.

(iii) *Timeliness of first-level appeal determination.* The CHAMPUS contractor normally shall issue its first-level appeal determination no later than 60 days from the date of receipt of the request for first-level appeal.

(iv) *Notice of first-level appeal determination.* The CHAMPUS contractor shall issue a written notice of the first-level appeal determination to the appealing party at his or her last known address. The notice of the first-level appeal determination must contain the following elements:

(A) A statement of the issues or issue under appeal.

(B) The provisions of law, regulation, policies and guidelines that apply to the issue or issues under appeal.

(C) A discussion of the original and additional information that is relevant to the issue or issues under appeal.

(D) Whether the first-level appeal determination upholds the initial determination or reverses it, in whole or in part, and the rationale for the action.

(E) A statement of the right to appeal further in any case when the first-level appeal determination is less than fully favorable to the appealing party.

(v) *Effect of first-level appeal determination.* The first-level appeal determination is final if appeal rights have been offered, but a request for a second-level appeal is not postmarked or received by OCHAMPUS within 60 days of the date of the notice of the first-level appeal determination.

(3) *TRICARE Claimcheck or other similar software second-level appeal.* Except as explained in this paragraph (f), any party to a first-level appeal determination made by the CHAMPUS contractor may request a second-level appeal by OCHAMPUS if the party is dissatisfied with the first-level appeal determination unless the first-level appeal determination is final because of the reasons described in paragraph (f)(2)(v) of this section.

(i) *Requesting a second-level appeal.* (A) *Written request required.* The request must be in writing, shall state the specific mater in dispute, shall include a copy of the notice of first-level appeal determination being appealed, and shall include any additional information or documents not submitted previously.

(b) *Where to file.* The request shall be submitted to the Chief, Office of Appeals and Hearings, TRICARE Management Activity, 16401 E. Centertech Parkway, Aurora, CO 80011–9043.

(C) *Allowed time to file.* The request shall be mailed within 60 days after the date of the notice of the first-level appeal determination.

(d) *Official filing date.* A request for a second-level appeal shall be deemed filed on the date it is mailed and postmarked. For the purposes of CHAMPUS, a postmark is a cancellation mark issued by the Untied States Postal Service. If the request does not have a postmark, it shall be deemed filed on the date received by OCHAMPUS.

(ii) *The second-level appeal process.* The purpose of the second-level appeal is to determine whether the initial determination and first-level appeal determination correctly identified improper claims. The second-level appeal is performed by the Chief, Office of Appeals and Hearings, OCHAMPUS, or a designee, and is a thorough review of the case. The second-level appeal determination is based on the information upon which the initial determination and the first-level appeal

determination were based, and any additional information the appealing party may submit or OCHAMPUS may obtain.

(iii) *Timeliness of second-level appeal determination.* The Chief, Office of Appeals and Hearings, OCHAMPUS or a designee, normally shall issue a written notice of the second-level appeal determination no later than 90 days from the date of receipt of the request for second-level appeal by OCHAMPUS.

(iv) *Notice of second-level appeal determination.* The Chief, Office of Appeals and Hearings, OCHAMPUS or designee, shall issue a written notice of the second-level appeal determination to the appealing party at his or her last known address. The notice of the second-level appeal determination must contain the following elements:

(A) A statement of the issue or issues under appeal.

(B) The provisions of law, regulation, policies and guidelines that apply to the issue or issues under appeal.

(C) A discussion of the original and additional information that is relevant to the issue or issues under appeal.

(D) Whether the second-level appeal determination upholds the first-level appeal determination or reverses the first-level appeal determination in whole or in part and the rationale for the action.

(v) *Effect of second-level appeal determination.* The second-level appeal determination is the final action of the TRICARE Claimcheck or other similar software administrative appeal process.

4. Section 199.15 is proposed to be amended by revising paragraphs (f)(3)(ii)(A), (h), (i)(1), (i)(2), and (i)(4) as follows:

§ 199.15 Quality and utilization review peer review organization program.

* * * * *

(f) * * *

(3) * * *

(ii) * * *

(A) A reconsideration determination that would be final in a cases involving sole-function PROs under paragraph (i)(2) of this section will not be final in cases involving multi-function PROs. In addition, a reconsideration determination that would be appealed to OCHAMPUS in cases involving sole-function PROs under paragraph (i)(1) of this section will not be appealed to OCHAMPUS in cases involving multi-function PROs. Rather, in such cases, an opportunity for a second reconsideration shall be provided. The second reconsideration will be provided by OCHAMPUS or another contractor independent of the multi-function PRO that performed the review. The second reconsideration may not be further appealed by the provider except as provided in paragraph (i)(3) of this section.

* * * * *

(h) *Procedures regarding reconsiderations.* The CHAMPUS PROs shall establish and follow procedures for reconsiderations that are substantively the same or comparable to the procedures applicable to reconsiderations under Medicare pursuant to 42 CFR 473.15 to 473.34, except that the time limit for requesting reconsideration (see 42 CFR 473.20(a)(1)) shall be 90 days. A PRO reconsideration determination is final and binding upon all parties to the reconsideration except to the extent of any further appeal pursuant to paragraph (i) of this section.

(i) * * *

(1) Beneficiaries may appeal a PRO reconsideration determination to OCHAMPUS and obtain a hearing on such appeal to the extent allowed and under the procedures set forth in § 199.10(d).

(2) Except as provided in paragraph (i)(3) of this section, a PRO reconsideration determination may not be further appealed by a provider.

* * * * *

(4) For purposes of the hearing process, a PRO reconsidertion determination shall be considered as the procedural equivalent of a formal review determination under § 199.10, unless revised at the initiative of the Director, OCHAMPUS, prior to a hearing on the appeal, in which case the revised determination shall be considered as the procedural equivalent of a formal review determination under § 199.10.

* * * * *

Dated: January 4, 2000.

L.M. Bynum,

Alternate OSD Federal Register Liaison Officer Department of Defense.

[FR Doc. 00–660 Filed 1–12–00; 8:45 am]

BILLING CODE 5001–10–M

DEPARTMENT OF TRANSPORTATION

Coast Guard

33 CFR Parts 100, 110, and 165

[COTP San Juan 99–088]

OPSAIL 2000, Port of San Juan, PR

AGENCY: Coast Guard, DOT.

ACTION: Advanced notice of proposed rulemaking; request for comments.

SUMMARY: The Coast Guard requests public comment on the temporary establishment of exclusion areas before, during, and after OPSAIL 2000 in the Port of San Juan, Puerto Rico from May 19 through May 29, 2000. The Coast Guard anticipates a rulemaking to establish temporary limited access areas and Special Local Regulations to control vessel traffic within the Port of San Juan during this event, including fireworks displays on the evenings of May 25, and May 28, 2000, and during the Outbound Parade of Sail on Monday, May 29, 2000, and establishing new and/or assigning currently designated Anchorage Grounds for spectator vessels. These temporary regulations will be necessary to ensure the safety of persons and property in the vicinity of fireworks displays and in the movement of numerous large sail vessels (Tall Ships) during the Parade of Sail.

DATES: Comments must be received on or before February 28, 2000.

ADDRESSES: Comments may be mailed to the U.S. Coast Guard Marine Safety Office San Juan, P.O. Box 71526, San Juan, Puerto Rico 00936–8626, or may be delivered to Rodriguez & Del Valle, 4th Floor, Calle San Martin, Carr #2 km 4.9, Guaynabo, Puerto Rico, between the hours of 7 a.m. and 3:30 p.m., Monday through Friday, except Federal holidays.

Marine Safety Office, San Juan, Puerto Rico maintains the public docket for this rulemaking. Comments, and documents as indicated in this preamble, will become part of this docket and will be available for inspection or copying at the Coast Guard Marine Safety Office San Juan, between 7 a.m. and 3:30 p.m., Monday through Friday, except Federal holidays.

FOR FURTHER INFORMATION CONTACT: Lieutenant Commander Robert Lefevers, U.S. Coast Guard Marine Safety Office, San Juan at (787) 706–2440, between 7 a.m. and 3:30 p.m., Monday through Friday, except Federal holidays.

SUPPLEMENTARY INFORMATION:

Request for Comments

The Coast Guard encourages interested persons to participate in the early stages of this rulemaking by submitting written data, views, or arguments. Please explain your reasons for each comment so that we can carefully weigh the consequences and impacts of any future requirements we may propose. Persons submitting comments should include their names and addresses, identify this rulemaking (COTP San Juan 99–088) and the specific section of this document to which each comment applies. Please submit two copies of all comments and

attachments in English and in an unbound format, no larger than 8½ by 11 inches, suitable for copying and electronic filing. Persons wanting acknowledgment of receipt of comments should enclose a stamped, self-addressed postcard or envelope. The Coast Guard will consider all comments received during the comment period.

The Coast Guard plans no public hearing. Persons may request a public hearing by writing to the U.S. Coast Guard Marine Safety Office at the address under **ADDRESSES**. The request should include the reasons why a hearing would be beneficial. If it determines that the opportunity for oral presentations will aid this rulemaking, the Coast Guard will hold a public hearing at a time and place announced by a later notice in the **Federal Register**.

Background and Purpose

Opsail 2000 is sponsoring fireworks displays and the OPSAIL 2000 Parade of Tall Ships. These events are scheduled to take place from May 19 through 29, 2000, in the Port of San Juan, in San Juan Harbor. The Coast Guard expects many spectator craft for this event. The anticipated rulemaking will provide specific guidance on temporary anchorage regulations, vessel movement controls, safety and security zones that will be in effect at various times in those waters during the period May 19 through 29, 2000. The Coast Guard may seek to establish additional regulated areas, Anchorage Grounds with regulations, and safety or security zones once confirmation of the exact number of vessels and dignitaries that will be participating in OPSAIL 2000 becomes available.

Schedule of Events

At the current time, marine related events will include the following:

1. Starting May 19, 2000: Tall ships arrive and moor at Piers 1 through 14.
2. May 25, 2000: Fireworks display scheduled to take place from Isla Grande.
3. May 28, 2000: Fireworks display scheduled to take place over San Juan Harbor.
4. May 29, 2000: Outbound Parade of Sail and departure of the participating vessels.

Discussion

The Coast Guard estimates many spectator craft and commercial vessels (passenger vessels and charter boats) in the area during May 19 to 29, 2000. The safety of parade participants and spectators will require that spectator craft be kept at a safe distance from the parade route. The Coast Guard intends to establish multiple limited access areas for the vessel parade, and to temporarily modify existing anchorage areas within the port area to provide for maximum spectator viewing areas and traffic patterns for deep draft and barge traffic. The only other restriction anticipated for commercial deep draft and barge traffic will be during the fireworks displays that begin at approximately 9 p.m. for a duration of approximately 30 minutes. The greatest traffic restrictions will be in place during the Outbound Parade of Sail, when the Captain of the Port may close San Juan Harbor for a portion of the day, and a Parade of Sail safety zone may be enforced between the hours of 7 a.m. and 6 p.m. on Monday, May 29, 2000.

Regulatory Evaluation

At this early stage in what is still just a potential rulemaking, the Coast Guard has not determined whether any future rulemaking may be considered a significant regulatory action under section 3(f) of Executive Order 12866 or the regulatory policies and procedures of the Department of Transportation (DOT) (44 FR 11040; February 26, 1979).

The Coast Guard expects the economic impact of any future rulemaking to be minimal. Although the Coast Guard anticipates restricting traffic in San Juan Harbor on Monday, May 29, 2000, the effect of any future rulemaking will be minimized because of the limited duration of the event and the extensive advance notifications that will be made to the maritime community via the **Federal Register**, the Local Notice to Mariners, facsimile, the internet, marine information broadcasts, maritime association meetings, and San Juan area newspapers, so mariners can adjust their plans accordingly. The Coast Guard anticipates that the majority of the maritime industrial activity in the Port of San Juan will continue relatively unaffected by any future rulemaking.

Small Entities

Under the Regulatory Flexibility Act (5 U.S.C. 601 *et seq.*), the Coast Guard must consider whether any potential rulemaking, if it led to an actual rule, would have a significant economic impact on a substantial number of small entities. ''Small entities'' include small businesses, not-for-profit organizations that are independently owned and operated and are not dominant in their fields, and governmental jurisdictions with populations of less than 50,000.

The Coast Guard does not anticipate that its potential rulemaking will have anything but a minimal impact upon small entities, but expects that comments received on this advance notice will help it determine the number of potentially affected small entities and in weighing the impacts of various regulatory alternatives for the purpose of drafting any rules.

Assistance for Small Entities

In accordance with section 213(a) of the Small Business Regulatory Enforcement Act of 1996 [Pub. L. 104–121], the Coast Guard wants to assist small entities in understanding this advance notice so that they can better evaluate the potential effects of any future rulemaking on them and participate in the rulemaking. If you believe that your small business, organization, or agency may be affected by any future rulemaking, and if you have questions concerning this notice, please consult the Coast Guard point of contact designated in **FOR FURTHER INFORMATION CONTACT**. The Coast Guard is particularly interested in how any future rulemaking may affect small entities. If you are a small entity and believe that you may be affected by such a rulemaking, please tell how, and what flexibility or compliance alternatives the Coast Guard should consider to minimize the burden on small entities while promoting port safety.

Collection of Information

The Coast Guard anticipates that any future rulemaking will not provide for a collection of information under the Paperwork Reduction Act of 1995 (44 U.S.C. 3501 *et seq.*).

Federalism

The Coast Guard has analyzed this advanced notice under Executive Order 13132. From the information currently available , we cannot determine whether this potential rulemaking will have sufficient federalism implications under that Order.

Unfunded Mandates Reform Act

Under the Unfunded Mandates Reform Act of 1995 (Pub. L. 104–4), the Coast Guard must consider whether this potential rulemaking will result in an annual expenditure by state, local, and tribal governments, in the aggregate of $100 million (adjusted annually for inflation). If so, the Act requires that a reasonable number of regulatory alternatives be considered, and that from those alternatives, the least costly, most cost-effective, or least burdensome alternative that achieves the objective of the rule be selected. The Coast Guard does not anticipate that any future rulemaking will result in such expenditures, but welcomes comments

addressing the issue from interested parties.

Taking of Private Property

The Coast Guard anticipates that any potential rulemaking will not effect a taking of private property or otherwise have taking implications under E.O. 12630, Governmental Actions and Interference with Constitutionally Protected Property Rights.

Civil Justice Reform

The Coast Guard anticipates that any potential rulemaking will meet applicable standards in sections 3(a) and 3(b)(2) of E.O. 12988, Civil Justice Reform, to minimize litigation, eliminate ambiguity, and reduce burden.

Protection of Children

The Coast Guard anticipates that any potential rulemaking will not be economically significant and will not present an environmental risk to health or risk to safety that may disproportionately affect children under E.O. 13045, Protection of Children from Environmental Health Risks and Safety Risks.

Environment

The Coast Guard anticipates that any potential rulemaking will require an Environmental Assessment due to the advertised size of the event and its proximity to sensitive environmental areas. An environmental analysis has been required from the event sponsor. Further, any potential rulemaking will be designed to minimize the likelihood of maritime accidents and attendant environmental consequences and to enhance the safety of participants, spectators, and other maritime traffic. The Coast Guard invites comments addressing possible effects that any such rulemaking may have on the human environment or addressing possible inconsistencies with any Federal, State, or local law or administrative determinations relating to the environment. It will reach a final determination once it has received a detailed parade of sail plan and environmental analysis from the sponsor organization.

Dated: December 16, 1999.

J.A. Servidio,

Commander, Coast Guard Captain of the Port, San Juan.

[FR Doc. 00–761 Filed 1–12–00; 8:45 am]

BILLING CODE 4910–15–P

FEDERAL COMMUNICATIONS COMMISSION

47 CFR Parts 1, 22, and 101

[WT Docket No. 97–81; DA 98–1889]

Multiple Address Systems

AGENCY: Federal Communications Commission.

ACTION: Proposed rule; correction.

SUMMARY: This document corrects portions of the document implementing Commission's Order dismissing all pending Multiple Address Systems (MAS) applications that was published in the **Federal Register** of October 5, 1998 (63 FR 53350).

FOR FURTHER INFORMATION CONTACT: Sam Gumbert, Commercial Wireless Division, Wireless Telecommunications Bureau, at (202) 418–1337.

SUPPLEMENTARY INFORMATION: The Public Safety and Private Wireless Division of the Wireless Telecommunications Bureau published a document on October 5, 1998 which dismissed all pending Multiple Address System (MAS) applications for use of the 932–932.5–941–941.5 MHz bands. In proposed rule FR Doc. 98–26568, published in October 5, 1998 (63 FR 53350) make the following corrections:

1. On page 53350, in the second column, the **DATES** caption is corrected to read as follows: **DATES**: All pending MAS applications for use of the 932–932.5/941–941.5 MHz bands (File Nos. A00001–A50772 and applications filed under Part 22) were dismissed on September 17, 1998.

2. On page 53350, in the third column, the **FOR FURTHER INFORMATION CONTACT** caption is corrected to read as follows: **FOR FURTHER INFORMATION CONTACT:** Ronald Quirk or Shellie Blakeney, Wireless Telecommunications Bureau, Public Safety and Private Wireless Division, Policy and Rules Branch, (202) 418–0680, or via E-mail to ''rquirk@fcc.gov'' or ''sblakene@fcc.gov.'' Also, Sam Gumbert, Commercial Wireless Division, Licensing and Technical Analysis Branch, (202) 418–1337, or via E-mail to ''sgumbert@fcc.gov.''

3. On page 53351, in the second column, after the last line, the following attachment listing the MAS applications filed under part 22 of the Commission's rules is added to the document.

Federal Communications Commission.

Stephen L. Markendorff,

Deputy Chief, Commercial Wireless Division, Wireless Telecommunications Bureau.

Attachment

The following applications for Multiple Address System were under Part 22 of the Commission's Rules.

AAT RADIOTELEPHONE COMPANY, STATEN ISLAND, NY: Fee Number: CD9201138924011014
AAT RADIOTELEPHONE COMPANY, STATEN ISLAND, NY: Fee Number: CD9201138924011015
AAT RADIOTELEPHONE COMPANY, STATEN ISLAND, NY: Fee Number: CD9201138924011018
AGR BEEPERS INC, WEST PALM BEACH, FL: Fee Number: CD9201168924013001
AMERICAN BEEPER COMPANY INC, CHICAGO, IL: Fee Number: CD9201238924019001
AMERICAN PAGING INC OF ARIZONA, PHOENIX, AZ: Fee Number: CD9202108924045003
AMERICAN PAGING INC OF KENTUCKY, SHELBYVILLE, KY: Fee Number: CD9201238924019003
AMERICAN PAGING INC OF VIRGINIA, PRINCE FREDERICK, MD: Fee Number: CD9201108924005022
AMERICAN PAGING INC OF VIRGINIA, FREDERICK, MD: Fee Number: CD9201108924005024
AMERICAN PAGING INC, OF VIRGINIA, SILVER SPRING, MD: Fee Number: CD9201108924005025
ARCH CAPITOL DISTRICT INC, FAIRPORT, NY: Fee Number: CD9201138924007001
ARCH CAPITOL DISTRICT INC, LAFAYETTE, NY: Fee Number: CD9201138924007002
ARCH CAPITOL DISTRICT INC, PATTERSONVILLE, NY: Fee Number: CD9201138924007007
ARCH CAPITOL DISTRICT INC, PATTERSONVILLE, NY: Fee Number: CD9201138924007011
ARCH CAPITOL DISTRICT INC, DEERFIELD TWP, NY: Fee Number: CD9201138924007012
ARCH CAPITOL DISTRICT INC, NEW SALEM, NY: Fee Number: CD9201138924007013
ARCH CAPITOL DISTRICT INC, PATTERSONVILLE, NY: Fee Number: CD9201138924007014
ARCH CAPITOL DISTRICT INC, NEW SALEM, NY: Fee Number: CD9201138924007015
ARCH CAPITOL DISTRICT INC, NEW YORK, NY: Fee Number: CD9201138924007016
ARCH CAPITOL DISTRICT INC, BUFFALO, NY: Fee Number: CD9201138924007017

ARCH CAPITOL DISTRICT INC, HIGHLAND, NY: Fee Number: CD9201138924007018
ARCH CAPITOL DISTRICT INC, PATTERSONVILLE, NY: Fee Number: CD9201138924007019
ARCH CAPITOL DISTRICT INC, BEACON, NY: Fee Number: CD9201138924007020
ARCH CAPITOL DISTRICT INC, NEW YORK, NY: Fee Number: CD9201138924007024
ARCH CONNECTICUT VALLEY INC, STAMFORD, CT: Fee Number: CD9201138924007008
ARCH CONNECTICUT VALLEY INC, GOFFSTOWN, NH: Fee Number: CD9201138924007009
ARCH CONNECTICUT VALLEY INC, TAUNTON, MA: Fee Number: CD9201138924007021
ARCH CONNECTICUT VALLEY INC, WINDSOR, VT: Fee Number: CD9201138924007022
ARCH CONNECTICUT VALLEY INC, BOSTON, MA: Fee Number: CD9201138924007023
ARCH CONNECTICUT VALLEY INC, HOLYOKE, MA: Fee Number: CD9201138924007025
ARCH SOUTHEAST COMMUNICATIONS INC, GAINESVILLE, FL: Fee Number: CD9201168924013007
BUSSMAN, KEITH B, GOLDEN, CO: Fee Number: CD9201308924021013
BUSSMAN, KEITH B, CHEYENNE, WY: Fee Number: CD9201308924021014
CARRIER COMMUNICATIONS CORP, NEW YORK, NY: Fee Number: CD9201108924005013
CARRIER COMMUNICATIONS CORP, BOSTON, MA: Fee Number: CD9201108924005014
CARRIER COMMUNICATIONS CORP, SELDEN, NY: Fee Number: CD9201108924005015
CARRIER COMMUNICATIONS CORP, MAHOPAC, NY: Fee Number: CD9201108924005039
CARRIER COMMUNICATIONS CORP, PHILADELPHIA, PA: Fee Number: CD9201108924005040
CELLULAR ELECTRONICS INC, MIAMI, FL: Fee Number: CD9201178924015025
COMMUNICATION TRANSMITTINC SERVICE, SANTA PAULA, CA: Fee Number: CD9202078924037022
COMMUNICATION TRANSMITTINC SERVICE, PASADENA, CA: Fee Number: CD9202078924037023
COMMUNICATION TRANSMITTINC SERVICE, LAGUNA HILLS, CA: Fee Number: CD9202078924037024
CONTACT COMMUNICATIONS INC, SYOSSET, NY: Fee Number: CD9201108924005016
CONTACT COMMUNICATIONS INC, PAXTON, MA: Fee Number: CD9201108924005017
CONTACT COMMUNICATIONS INC, BARNEGAT, NJ: Fee Number: CD9201108924005018
CONTACT COMMUNICATIONS INC, MANORVILLE, NY: Fee Number: CD9201108924005019
CONTACT COMMUNICATIONS INC, TRENTON, NJ: Fee Number: CD9201108924005020
CONTACT COMMUNICATIONS INC, BALTIMORE, MD: Fee Number: CD9201108924005021
CONTACT COMMUNICATIONS INC, HIGHLAND, NY: Fee Number: CD9201108924005023
CONTACT COMMUNICATIONS INC, NEW YORK, NY: Fee Number: CD9201108924005027
CONTACT COMMUNICATIONS INC, NEW YORK, NY: Fee Number: CD9201108924005028
CONTACT COMMUNICATIONS INC, HIGHLAND, NY: Fee Number: CD9201108924005038
COOK TELECOM INC OF SAN DIEGO, STEELE, CA: Fee Number: CD9202108924042023
COOK TELECOM INC OF SAN DIEGO, SAN MARCOS, CA: Fee Number: CD9202108924042024
CRICO COMMUNICATIONS CORPORATION, FORT LAUDERDALE, FL: Fee Number: CD9201178924015004
CRICO COMMUNICATIONS CORPORATION, FORT LAUDERDALE, FL: Fee Number: CD9201178924015005
CRICO COMMUNICATIONS CORPORATION, FORT LAUDERDALE, FL: Fee Number: CD9201178924015006
CRICO COMMUNICATIONS CORPORATION, FORT LAUDERDALE, FL: Fee Number: CD9201178924015007
CRICO COMMUNICATIONS CORPORATION, FORT LAUDERDALE, FL: Fee Number: CD9201178924015008
CRICO COMMUNICATIONS CORPORATION, WEST PALM BEACH, FL: Fee Number: CD9201178924015009
CRICO COMMUNICATIONS CORPORATION, WEST PALM BEACH, FL: Fee Number: CD9201178924015010
CRICO COMMUNICATIONS CORPORATION, FORT LAUDERDALE, FL: Fee Number: CD9201178924015011
CRICO COMMUNICATIONS CORPORATION, MIAMI, FL: Fee Number: CD9201178924015012
CRICO COMMUNICATIONS CORPORATION, STUART, FL: Fee Number: CD9201178924015013
ELECTRONIC SYSTEMS CO INC, HANOVER TOWNSHIP, PA: Fee Number: CD9201138924011019
EXPRESS MESSAGE CORPORATION, HOUSTON, TX: Fee Number: CD9201308924021015
FORSYTHE & ASSOCIATES INC, IDAHO SPRINGS, CO: Fee Number: CD9201308924021008
GTE FLORIDA, LAKELAND, FL: Fee Number: CD9201178924015001
GTE FLORIDA, SARASOTA, FL: Fee Number: CD9201178924015002
GTE FLORIDA, LAKELAND, FL: Fee Number: CD9201178924015003
GTE FLORIDA, TAMPA, FL: Fee Number: CD9201178924015022
GTE FLORIDA, HILLSBOROUGH, FL: Fee Number: CD9201178924015024
HARRIS, HAROLD, VISALIA, CA: Fee Number: CD9202108924047001
INDIANA PAGING NETWORK INC, CHICAGO, IL: Fee Number: CD9201238924019002
INTERELECTRONICS CORPORATION, CONGERS, NY: Fee Number: CD9201098924002002
INTERELECTRONICS CORPORATION, NEW YORK, NY: Fee Number: CD9201098924002003
KELLEY, PAUL, MOUNTAIN TOP, PA: Fee Number: CD9201098924001036
KJ PAGINC INC, ALEXANDRIA, VA: Fee Number: CD9201098924001035
KJ PAGINC INC, TOWSON, MD: Fee Number: CD9201098924001037
KWIK PAGE COMMUNICATIONS INC, CHATSWORTH, CA: Fee Number: CD9202108924068002
LITELCO COMMUNICATIONS INC, NEW HAVEN, CT: Fee Number: CD9201138924008008
LITELCO COMMUNICATIONS INC, NEW HAVEN, CT: Fee Number: CD9201138924011017
METROCALL OF DELAWARE, SANTA YNEZ, CA: Fee Number: CD9202108924044005
METROCALL OF DELAWARE INC, ALEXANDRIA, VA: Fee Number: CD9201098924001043
METROCALL OF DELAWARE INC, ALEXANDRIA, VA: Fee Number: CD9201098924001044
METROCALL OF DELAWARE INC, ALEXANDRIA, VA: Fee Number: CD9201098924001045
METROCALL OF DELAWARE INC, PHILADELPHIA, PA: Fee Number: CD9201108924005034
METROCALL OF DELAWARE INC, PHILADELPHIA, PA: Fee Number: CD9201108924005035
METROCALL OF DELAWARE INC, PHILADELPHIA, PA: Fee Number: CD9201108924005036

METROCALL OF DELAWARE INC, RENO, NV: Fee Number: CD9202108924044001
METROCALL OF DELAWARE INC, FOSTER CITY, CA: Fee Number: CD9202108924044002
METROCALL OF DELAWARE INC, DANVILLE, CA: Fee Number: CD9202108924044003
METROCALL OF DELAWARE INC, DANVILLE, CA: Fee Number: CD9202108924044004
METROCALL OF DELAWARE INC, GRASS VALLEY, CA: Fee Number: CD9202108924044006
METROCALL OF DELAWARE INC, GRASS VALLEY, CA: Fee Number: CD9202108924044007
METROCALL OF DELAWARE INC, GRASS VALLEY, CA: Fee Number: CD9202108924044008
METROCALL OF DELAWARE INC, LOS ANGELES, CA: Fee Number: CD9202108924044009
METROCALL OF DELAWARE INC, LOS ANGELES, CA: Fee Number: CD9202108924044010
METROCALL OF DELAWARE INC, ANAHEIM, CA: Fee Number: CD9202108924044011
METROCALL OF DELAWARE INC, ANAHEIM, CA: Fee Number: CD9202108924044012
METROCALL OF DELAWARE INC, LOS GATOS, CA: Fee Number: CD9202108924044016
METROCALL OF DELAWARE INC, LOS GATOS, CA: Fee Number: CD9202108924044017
METROCALL OF DELAWARE INC, FOSTER CITY, CA: Fee Number: CD9202108924044019
METROCALL OF DELAWARE INC, RENO, NV: Fee Number: CD9202108$24044020
METROCALL OF DELAWARE INC, RENO, NV: Fee Number: CD9202108924044021
METROCALL OF DELAWARE INC, SAN DIEGO, CA: Fee Number: CD9202108924044022
METROCALL OF DELAWARE INC, MAJESKA, CA: Fee Number: CD9202108924044023
METROCALL OF DELAWARE INC, LOS ANGELES, CA: Fee Number: CD9202108924044024
METROCALL OF DELAWARE INC, SANTA YNEZ, CA: Fee Number: CD9202108924044025
METROCALL OF DELAWARE INC, DANVILLE, CA: Fee Number: CD9202108924045001
METROCALL OF DELAWARE INC, LOS GATOS, CA: Fee Number: CD9202108924045002
METROCALL OF DELAWARE INC, SAN DIEGO, CA: Fee Number: CD9202108924045004
METROCALL OF DELAWARE INC, MAJESKA, CA: Fee Number: CD9202108924045005
METROCALL OF DELAWARE INC, MAJESKA, CA: Fee Number: CD9202108924045006
METROCALL OF DELAWARE INC, FOSTER CITY, CA: Fee Number: CD9202108924045007
METROCALL OF DELAWARE INC, SANTA YNEZ, CA: Fee Number: CD9202108924045008
METROCALL OF DELAWARE INC, SAN DIEGO, CA: Fee Number: CD9202108924045009
METROCALL OF DELAWARE INC, ANAHEIM, CA: Fee Number: CD9202108924045010
METROMEDIA PAGING SERVICES INC, MANORVILLE, NY: Fee Number: CD9201098924001001
METROMEDIA PAGING SERVICES INC, NEW YORK, NY: Fee Number: CD9201098924001002
METROMEDIA PAGING SERVICES INC, FISHKILL, NY: Fee Number: CD9201098924001005
METROMEDIA PAGING SERVICES INC, BARNEGAT, NJ: Fee Number: CD9201098924001038
METROMEDIA PAGING SERVICES INC, TRENTON, NJ: Fee Number: CD9201098924001039
METROMEDIA PAGING SERVICES INC, BARNEGAT, NJ: Fee Number: CD9201098924001040
METROMEDIA PAGING SERVICES INC, TRENTON, NJ: Fee Number: CD9201098924001046
METROMEDIA PAGING SERVICES INC, NEW SALEM, NY: Fee Number: CD9201098924001047
METROMEDIA PAGING SERVICES INC, FORT LEE, NJ: Fee Number: CD9201098924001048
METROMEDIA PAGING SERVICES INC, FORT LEE, NJ: Fee Number: CD9201098924001049
METROMEDIA PAGING SERVICES INC, NEW YORK, NY: Fee Number: CD9201098924002005
METROMEDIA PAGING SERVICES INC, NEW YORK, NY: Fee Number: CD9201098924002006
METROMEDIA PAGING SERVICES INC, NEW YORK, NY: Fee Number: CD9201098924002007
METROMEDIA PAGING SERVICES INC, GREENBROOK, NJ: Fee Number: CD9201098924002008
METROMEDIA PAGING SERVICES INC, GREENBROOK, NJ: Fee Number: CD9201098924002009
METROMEDIA PAGING SERVICES INC, GREENBROOK, NJ: Fee Number: CD9201098924002010
METROMEDIA PAGING SERVICES INC, GREENBROOK, NJ: Fee Number: CD9201098924002011
METROMEDIA PAGING SERVICES INC, BRIDGEPORT, CT: Fee Number: CD9201098924002012
METROMEDIA PAGING SERVICES INC, BRIDGEPORT, CT: Fee Number: CD9201098924002013
METROMEDIA PAGING SERVICES INC, NEW YORK, NY: Fee Number: CD9201098924002014
METROMEDIA PAGING SERVICES INC, FISHKILL, NY: Fee Number: CD9201098924002015
METROMEDIA PAGING SERVICES INC, BRIDGEPORT, CT: Fee Number: CD9201098924002016
METROMEDIA PAGING SERVICES INC, MANORVILLE, NY: Fee Number: CD9201098924002017
METROMEDIA PAGING SERVICES INC, DOROTHY, NJ: Fee Number: CD9201098924003001
METROMEDIA PAGING SERVICES INC, LEESBURG, VA: Fee Number: CD9201098924003002
METROMEDIA PAGING SERVICES INC, PINE HILL, NJ: Fee Number: CD9201098924003003
METROMEDIA PAGING SERVICES INC, CAMDEN, DE: Fee Number: CD9201098924003004
METROMEDIA PAGING SERVICES INC, SALISBURY, MD: Fee Number: CD9201098924003005
METROMEDIA PAGING SERVICES INC, FREDERICK, MD: Fee Number: CD9201098924003006
METROMEDIA PAGING SERVICES INC, COLUMBIA, MD: Fee Number: CD9201098924003007
METROMEDIA PAGING SERVICES INC, COLUMBIA, MD: Fee Number: CD9201098924003008
METROMEDIA PAGING SERVICES INC, COLUMBIA, MD: Fee Number: CD9201098924003009
METROMEDIA PAGING SERVICES INC, BETHESDA, MD: Fee Number: CD9201098924003010
METROMEDIA PAGING SERVICES INC, CREVE COEUR, MO: Fee Number: CD9201238924019005
METROMEDIA PAGING SERVICES INC, CONROE, TX: Fee Number: CD9201308924021001
METROMEDIA PAGING SERVICES INC, HOUSTON, TX: Fee Number: CD9201308924021002
METROMEDIA PAGING SERVICES INC, AUSTIN, TX: Fee Number: CD9201308924021003
METROMEDIA PAGING SERVICES INC, HOUSTON, TX: Fee Number: CD92013d8924021004
METROMEDIA PAGING SERVICES INC, ALLEN, TX: Fee Number: CD9201308924021005
METROMEDIA PAGING SERVICES INC, AUSTIN, TX: Fee Number: CD9201308924021006

METROMEDIA PAGING SERVICES INC, AUSTIN, TX: Fee Number: CD9201308924021007
METROMEDIA PAGING SERVICES INC, SACRAMENTO, CA: Fee Number: CD9202108924042018
MID ATLANTIC PAGING COMPANY INC, ALEXANDRIA, VA: Fee Number: CD9201098924001024
MID ATLANTIC PAGING COMPANY INC, NEW YORK, NY: Fee Number: CD9201098924001026
MID ATLANTIC PAGING COMPANY INC, LEWES, DE: Fee Number: CD9201098924001027
MID ATLANTIC PAGING COMPANY INC, NORFOLK, VA: Fee Number: CD9201098924001028
MID ATLANTIC PAGING COMPANY INC, BOSTON, MA: Fee Number: CD9201098924001029
MID ATLANTIC PAGING COMPANY INC, RICHMOND, VA: Fee Number: CD9201098924001030
MID ATLANTIC PAGING COMPANY INC, CENTRAL ISLIP, NY: Fee Number: CD9201098924001031
MID ATLANTIC PAGING COMPANY INC, ELWOOD, NJ: Fee Number: CD9201098924001032
MID ATLANTIC PAGING COMPANY INC, ARBUTUS, MD: Fee Number: CD9201098924001033
MID ATLANTIC PAGING COMPANY INC, PHILADELPHIA, PA: Fee Number: CD9201098914001034
NETWORK PAGE INC, SALISBURY, MD: Fee Number: CD9201108924005029
NETWORK PAGE INC, BALTIMORE, MD: Fee Number: CD9201108924005030
NETWORK PAGE INC, ALEXANDRIA, VA: Fee Number: CD9201108924005037
PAC TEL PAGING OF TEXAS, ARLINGTON, TX: Fee Number: CD9201308924022001
PAC TEL PAGING OF TEXAS, ARLINGTON, TX: Fee Number: CD9201308924022002
PAC TEL PAGING OF TEXAS, ARLINGTON, TX: Fee Number: CD9201308924022003
PAC TEL PAGING OF TEXAS, HEDWIG VILLAGE, TX: Fee Number: CD9201308924022004
PAC TEL PAGING OF TEXAS, HEDWIG VILLAGE, TX: Fee Number: CD9201308924022005
PAC TEL PAGING OF TEXAS, HEDWIG VILLAGE, TX: Fee Number: CD9201308924022006
PAC TEL PAGING OF TEXAS, ARLINGTON, TX: Fee Number: CD9201308924022007
PAC TEL PAGING OF TEXAS, ARLINGTON, TX: Fee Number: CD9201308924022008
PAC TEL PAGING OF TEXAS, ARLINGTON, TX: Fee Number: CD9201308924022009
PAC TEL PAGING OF TEXAS, ARLINGTON, TX: Fee Number: CD9201308924022010
PAC TEL PAGING OF VIRGINIA INC, BALTIMORE, MD: Fee Number: CD9201108924006001
PAC WEST TELECOMM INC, MARIPOSA, CA: Fee Number: CD9202108924042001
PAC WEST TELECOMM INC, PASADENA, CA: Fee Number: CD9202108924042010
PAC WEST TELECOMM INC, STOCKTON, CA: Fee Number: CD9202108924042011
PAC WEST TELECOMM INC, WESTLEY, CA: Fee Number: CD9202108924042016
PAC WEST TELECOMM INC, VACAVILLE, CA: Fee Number: CD9202108924042017
PACIFIC BELL, SACRAMENTO, CA: Fee Number: CD9202078924037025
PACIFIC BELL, SAN DIEGO, CA: Fee Number: CD9202108924042002
PACIFIC BELL, OAKLAND, CA: Fee Number: CD9202108924042003
PACIFIC BELL, STOCKTON, CA: Fee Number: CD9202108924042004
PACIFIC BELL, SAN DIEGO, CA: Fee Number: CD9202108924042006
PACIFIC BELL, LOS ANGELES, CA: Fee Number: CD9202108924042019
PACIFIC BELL, LOS ANGELES, CA: Fee Number: CD9202108924042020
PACIFIC BELL, FRESNO, CA: Fee Number: CD9202108924042021
PACIFIC BELL, LOS ANGELES, CA: Fee Number: CD9202108924042022
PACTEL PAGING, ATLANTA, GA: Fee Number: CD9201168924014001
PACTEL PAGING, ATLANTA, GA: Fee Number: CD9201168924014002
PACTEL PAGING, ATLANTA, GA: Fee Number: CD9201168924014003
PACTEL PAGING, ATLANTA, GA: Fee Number: CD9201168924014004
PACTEL PAGING, ST. PETERSBURG, FL: Fee Number: CD9201168924014005
PACTEL PAGING, ST. PETERSBURG, FL: Fee Number: CD9201168924014006
PACTEL PAGING, ATLANTA, GA: Fee Number: CD9201168924014007
PACTEL PAGING, ORLANDO, FL: Fee Number: CD9201168924014008
PACTEL PAGING, FARMINGTON HILLS, MI: Fee Number: CD9201238924019010
PACTEL PAGING, CINCINATTI, OH: Fee Number: CD9201238924019011
PACTEL PAGING, OVERLAND, MO: Fee Number: CD9201238924019012
PACTEL PAGING, FARMINGTON HILLS, MI: Fee Number: CD9201238924019013
PACTEL PAGING, OVERLAND, MO: Fee Number: CD9201238924019014
PACTEL PAGING OF CALIFORNIA, SAN DIEGO, CA: Fee Number: CD9202078924037001
PACTEL PAGING OF CALIFORNIA, HAYWARD, CA: Fee Number: CD9202078924037002
PACTEL PAGING OF CALIFORNIA, HAYWARD, CA: Fee Number: CD9202078924037015
PACTEL PAGING OF CALIFORNIA, HAYWARD, CA: Fee Number: CD9202078924037016
PACTEL PAGING OF CALIFORNIA, HAYWARD, CA: Fee Number: CD9202078924037017
PACTEL PAGING OF CALIFORNIA, HAYWARD, CA: Fee Number: CD9202078924037018
PACTEL PAGING OF CALIFORNIA, HAYWARD, CA: Fee Number: CD9202078924037019
PACTEL PAGING OF CALIFORNIA, ANAHEIM, CA: Fee Number: CD9202078924037020
PACTEL PAGING OF CALIFORNIA, FRESNO, CA: Fee Number: CD9202078924037021
PACTEL PAGING OF CALIFORNIA, HAYWARD, CA: Fee Number: CD9202108924042009
PACTEL PAGING OF CALIFORNIA, ANAHEIM, CA: Fee Number: CD9202108924042012
PACTEL PAGING OF CALIFORNIA, ANAHEIM, CA: Fee Number: CD9202108924042013
PACTEL PAGING OF CALIFORNIA, SAN DIEGO, CA: Fee Number: CD9202108924042014
PACTEL PAGING OF CALIFORNIA, SANTA BARBARA, CA: Fee Number: CD9202108924042015
PACTEL PAGING OF CALIFORNIA, ANAHEIM, CA: Fee Number: CD9202108924068003
PACTEL PAGING OF CALIFORNIA, ANAHEIM, CA: Fee Number: CD9202108924068004
PACTEL PAGING OF CALIFORNIA, MODESTO, CA: Fee Number: CD9202108924068005
PACTEL PAGING OF CALIFORNIA, ANAHEIM, CA: Fee Number: CD9202108924068006
PAGEAMERICA OF NEW YORK INC, RIDGE, NY: Fee Number: CD9201138924010001
PAGEAMERICA OF NEW YORK INC, TRUMBULL, CT: Fee Number: CD9201138924010002
PAGEAMERICA OF NEW YORK INC, TRUMBULL, CT: Fee Number: CD9201138924010003
PAGEAMERICA OF NEW YORK INC, SUNNYSIDE, NY: Fee Number: CD9201138924010004

PAGEAMERICA OF NEW YORK INC, ALPINE, NJ: Fee Number: CD9201138924010005
PAGEAMERICA OF NEW YORK INC, MANAHAWKIN, NJ: Fee Number: CD9201138924010006
PAGEAMERICA OF NEW YORK INC, ALPINE, NJ: Fee Number: CD9201138924010007
PAGEAMERICA OF NEW YORK INC, DANBURY, CT: Fee Number: CD9201138924010020
PAGEAMERICA OF NEW YORK INC, MANORVILLE, NY: Fee Number: CD9201138924011020
PAGEAMERICA OF NEW YORK INC, CHESTERFIELD, CT: Fee Number: CD9201138924011021
PAGEAMERICA OF NEW YORK INC, NEW YORK, NY: Fee Number: CD9201138924011022
PAGEAMERICA OF NEW YORK INC, HACKENSACK, NJ: Fee Number: CD9201308924021011
PAGEAMERICA OF NEW YORK INC, HACKENSACK, NJ: Fee Number: CD9201308924021012
PAGEX COMPANY, CONGERS, NY: Fee Number: CD9201098924002001
PAGEX COMPANY, CONGERS, NY: Fee Number: CD9201098924002004
PAGING NETWORK OF NEW YORK, INC BLOOMING GROVE, NY: Fee Number: CD920113892401216
PAGING ASSOCIATES INC, GLASTONBURY, CT: Fee Number: CD9201138924011016
PAGING NETWORK INC, SEATTLE, WA: Fee Number: CD9202108924067018
PAGING NETWORK OF FLORIDA INC, FORT MEYERS, FL: Fee Number: CD9201178924015014
PAGING NETWORK OF FLORIDA INC, HOMESTEAD, FL: Fee Number: CD9201178924015015
PAGING NETWORK OF FLORIDA INC, MIRAMAR, FL: Fee Number: CD9201178924015016
PAGING NETWORK OF FLORIDA INC, FORT PIERCE, FL: Fee Number: CD9201178924015017
PAGING NETWORK OF FLORIDA INC, FORT LAUDERDALE, FL: Fee Number: CD9201178924015018
PAGING NETWORK OF FLORIDA INC, FORT LAUDERDALE, FL: Fee Number: CD9201178924015019
PAGING NETWORK OF FLORIDA INC, PALM CITY, FL: Fee Number: CD9201178924015020
PAGING NETWORK OF FLORIDA INC, PALM CITY, FL: Fee Number: CD9201178924015021
PAGING NETWORK OF FLORIDA INC, FORT PIERCE, FL: Fee Number: CD9201178924015023
PAGING NETWORK OF FLORIDA INC, FORT LAUDERDALE, FL: Fee Number: CD9201178924015026
PAGING NETWORK OF FLORIDA INC, PALM CITY, FL: Fee Number: CD9201178924015027
PAGING NETWORK OF FLORIDA INC, LAKELAND, FL: Fee Number: CD9201178924015028
PAGING NETWORK OF FLORIDA INC, BOYNTON BEACH, FL: Fee Number: CD9201178924015029
PAGING NETWORK OF HOUSTON INC, LEWISVILLE, TX: Fee Number: CD9201308924023001
PAGING NETWORK OF HOUSTON INC, FORT WORTH, TX: Fee Number: CD9201308924023602
PAGING NETWORK OF HOUSTON INC, CONROE, TX: Fee Number: CD9201308924023003
PAGING NETWORK OF HOUSTON INC, HOUSTON, TX: Fee Number: CD9201308924023004
PAGING NETWORK OF HOUSTON INC, BEAUMONT, TX: Fee Number: CD9201308924023005
PAGING NETWORK OF HOUSTON INC, HOUSTON, TX: Fee Number: CD9201308924023006
PAGING NETWORK OF HOUSTON INC, CEDAR HILLS, TX: Fee Number: CD9201308924023007
PAGING NETWORK OF ILLINOIS INC, LAKE VILLA, IL: Fee Number: CD9201238924020001
PAGING NETWORK OF ILLINOIS INC, WESTCHESTER, IL: Fee Number: CD9201238924020004
PAGING NETWORK OF ILLINOIS INC, SCHAUMBERG, IL: Fee Number: CD9201238924020005
PAGING NETWORK OF ILLINOIS INC, WESTCHESTER, IL: Fee Number: CD9201238924020012
PAGING NETWORK OF ILLINOIS INC, WESTCHESTER, IL: Fee Number: CD9201238924020020
PAGING NETWORK OF ILLINOIS INC, LOMBARD, IL: Fee Number: CD9201238924020023
PAGING NETWORK OF ILLINOIS INC, CHICAGO, IL: Fee Number: CD9201238924020024
PAGING NETWORK OF LOS ANGELES INC, COMMERCE, CA: Fee Number: CD9202108924044013
PAGING NETWORK OF LOS ANGELES INC, LAGUNA HILLS, CA: Fee Number: CD9202108924044018
PAGING NETWORK OF LOS ANGELES INC, SAN DIEGO, CA: Fee Number: CD9202108924047002
PAGING NETWORK OF LOS ANGELES INC, VENTURA, CA: Fee Number: CD9202108924047003
PAGING NETWORK OF LOS ANGELES INC, SAN DIEGO, CA: Fee Number: CD9202108924067001
PAGING NETWORK OF LOS ANGELES INC, GORMAN, CA: Fee Number: CD9202108924067002
PAGING NETWORK OF LOS ANGELES INC, GORMAN, CA: Fee Number: CD9202108924067003
PAGING NETWORK OF LOS ANGELES INC, GORMAN, CA: Fee Number: CD9202108924067004
PAGING NETWORK OF LOS ANGELES INC, COMMERCE, CA: Fee Number: CD9202108924067005
PAGING NETWORK OF LOS ANGELES INC, COMMERCE, CA: Fee Number: CD9202108924067006
PAGING NETWORK OF LOS ANGELES INC, COMMERCE, CA: Fee Number: CD9202108924067007
PAGING NETWORK OF LOS ANGELES INC, LAGUNA HILLS, CA: Fee Number: CD9202108924067008
PAGING NETWORK OF LOS ANGELES INC, LAGUNA HILLS, CA: Fee Number: CD9202108924067009
PAGING NETWORK OF LOS ANGELES INC, LAGUNA HILLS, CA: Fee Number: CD9202108924067010
PAGING NETWORK OF LOS ANGELES INC, PASADENA, CA: Fee Number: CD9202108924067011
PAGING NETWORK OF LOS ANGELES INC, PASADENA, CA: Fee Number: CD9202108924067012
PAGING NETWORK OF LOS ANGELES INC, PASADENA, CA: Fee Number: CD9202108924067013
PAGING NETWORK OF LOS ANGELES INC, PASADENA, CA: Fee Number: CD9202108924067014
PAGING NETWORK OF LOS ANGELES INC, VENTURA, CA: Fee Number: CD9202108924067015
PAGING NETWORK OF LOS ANGELES INC, VENTURA, CA: Fee Number: CD9202108924067016
PAGING NETWORK OF LOS ANGELES INC, VENTURA, CA: Fee Number: CD9202108924067017
PAGING NETWORK OF MASSACHUSETTS INC, PAXTON, MA: Fee Number: CD9201138924009017
PAGING NETWORK OF MASSACHUSETTS INC, SANFORD, ME: Fee Number: CD9201138924009021
PAGING NETWORK OF MASSACHUSETTS INC, KINGSTON, MA: Fee Number: CD9201138924011007
PAGING NETWORK OF MASSACHUSETTS INC, WALTHAM, MA: Fee Number: CD9201138924011009
PAGING NETWORK OF MASSACHUSETTS INC, JOHNSTON, RI: Fee Number: CD9201138924012010
PAGING NETWORK OF MASSACHUSETTS INC, CHESTER, NH: Fee Number: CD9201138924012011

PAGING NETWORK OF MASSACHUSETTS INC, KINGSTON, MA: Fee Number: CD9201138924012012
PAGING NETWORK OF MASSACHUSETTS INC, BURLINGTON, MA: Fee Number: CD9201138924012013
PAGING NETWORK OF MICHIGAN INC, HOLLY, MI: Fee Number: CD9201238924020002
PAGING NETWORK OF MICHIGAN INC, BRIGHTON TWSP, MI: Fee Number: CD9201238924020003
PAGING NETWORK OF MICHIGAN INC, HOLLY, MI: Fee Number: CD9201238924020006
PAGING NETWORK OF.MICHIGAN INC, PRAIRIEVILLE, MI: Fee Number: CD9201238924020007
PAGING NETWORK OF MICHIGAN INC, SOUTHFIELD, MI: Fee Number: CD9201238924020008
PAGING NETWORK OF MICHIGAN INC, FLINT, MI: Fee Number: CD9201238924020009
PAGING NETWORK OF MICHIGAN INC, FLINT, MI: Fee Number: CD9201238924020010
PAGING NETWORK OF MICHIGAN INC, ANN ARBOR, MI: Fee Number: CD9201238924020011
PAGING NETWORK OF MICHIGAN INC, BRIGHTON TWSP, MI: Fee Number: CD9201238924020013
PAGING NETWORK OF MICHIGAN INC, BRIGHTON TWSP, MI: Fee Number: CD9201238924020014
PAGING NETWORK OF MICHIGAN INC, BRIGHTON TWSP, MI: Fee Number: CD9201238924020015
PAGING NETWORK OF MICHIGAN INC, ANN ARBOR, MI: Fee Number: CD9201238924020016
PAGING NETWORK OF MICHIGAN INC, BRIGHTON TWSP, MI: Fee Number: CD9201238924020017
PAGING NETWORK OF MICHIGAN INC, FLINT, MI: Fee Number: CD9201238924020018
PAGING NETWORK OF MICHIGAN INC, SOUTHFIELD, MI: Fee Number: CD9201238924020019
PAGING NETWORK OF MICHIGAN INC, HOLLY, MI: Fee Number: CD9201238924020021
PAGING NETWORK OF MICHIGAN INC, SOUTHFIELD, MI: Fee Number: CD9201238924020022
PAGING NETWORK OF MICHIGAN INC, LANSING, MI: Fee Number: CD9201238924020025
PAGING NETWORK OF MICHIGAN INC, ANN ARBOR, MI: Fee Number: CD9201238924020026
PAGING NETWORK OF NEW YORK INC, MAHOPAC, NY: Fee Number: CD9201138924007004
PAGING NETWORK OF NEW YORK INC, PRINCETON, NJ: Fee Number: CD9201138924007005
PAGING NETWORK OF NEW YORK INC, MORRISTOWN, NJ: Fee Number: CD9201138924009008
PAGING NETWORK OF NEW YORK INC, PRINCETON, NJ: Fee Number: CD9201138924009009
PAGING NETWORK OF NEW YORK INC, BLOOMING GROVE, NY: Fee Number: CD9201138924009014
PAGING NETWORK OF NEW YORK INC, SELDEN, NY: Fee Number: CD9201138924009018
PAGING NETWORK OF NEW YORK INC, NEW YORK CITY, NY: Fee Number: CD9201138924009019
PAGING NETWORK OF NEW YORK INC, TRUMBULL, CT: Fee Number: CD9201138924009022
PAGING NETWORK OF NEW YORK INC, MORRISTOWN, NJ: Fee Number: CD9201138924009025
PAGING NETWORK OF NEW YORK INC, MARTINSVILLE, NJ: Fee Number: CD9201138924010009
PAGING NETWORK OF NEW YORK INC, TRUMBULL, CT: Fee Number: CD9201138924010011
PAGING NETWORK OF NEW YORK INC, MANORVILLE, NY: Fee Number: CD9201138924010012
PAGING NETWORK OF NEW YORK INC, NEW YORK CITY, NY: Fee Number: CD9201138924010015
PAGING NETWORK OF NEW YORK INC, NEW YORK CITY, NY: Fee Number: CD9201138924010016
PAGING NETWORK OF NEW YORK INC, PRINCETON, NJ: Fee Number: CD9201138924010017
PAGING NETWORK OF NEW YORK INC, CHERRYVILLE, NJ: Fee Number: CD9201138924010018
PAGING NETWORK OF NEW YORK INC, SELDEN, NY: Fee Number: CD9201138924011001
PAGING NETWORK OF NEW YORK INC, HIGHLAND, NY: Fee Number: CD9201138924011002
PAGING NETWORK OF NEW YORK INC, TRUMBULL, CT: Fee Number: CD9201138924011003
PAGING NETWORK OF NEW YORK INC, NEW YORK CITY, NY: Fee Number: CD9201138924011004
PAGING NETWORK OF NEW YORK INC, KENT, CT: Fee Number: CD9201138924011005
PAGING NETWORK OF NEW YORK INC, TRUMBULL, CT: Fee Number: CD9201138924011006
PAGING NETWORK OF NEW YORK INC, KENT, CT: Fee Number: CD9201138924011008
PAGING NETWORK OF NEW YORK INC, CATSKILL, NY: Fee Number: CD9201138924012001
PAGING NETWORK OF NEW YORK INC, CATSKILL, NY: Fee Number: CD9201138924012002
PAGING NETWORK OF NEW YORK INC, SELDEN, NY: Fee Number: CD9201138924012003
PAGING NETWORK OF NEW YORK INC, HIGHLAND, NY: Fee Number: CD9201138924012004
PAGING NETWORK OF NEW YORK INC, MORRISTOWN, NY: Fee Number: CD9201138924012006
PAGING NETWORK OF NEW YORK INC, NEW YORK CITY, NY: Fee Number: CD9201138924012007
PAGING NETWORK OF NEW YORK INC, KENT, CT: Fee Number: CD9201138924012008
PAGING NETWORK OF NEW YORK INC, VERNON, CT: Fee Number: CD9201138924012009
PAGING NETWORK OF NEW YORK INC, BLOOMING GROVE, NY: Fee Number: CD9201138924012017
PAGING NETWORK OF PHILADELPHIA INC, ELWOOD, NJ: Fee Number: CD9201138924009001
PAGING NETWORK OF PHILADELPHIA INC, ELWOOD, NJ: Fee Number: CD9201138924009002
PAGING NETWORK OF PHILADELPHIA INC, S. HARRISON TWP, NJ: Fee Number: CD9201138924009003
PAGING NETWORK OF PHILADELPHIA INC, PHILADELPHIA, PA: Fee Number: CD9201138924009004
PAGING NETWORK OF PHILADELPHIA INC, ALLENTOWN, PA: Fee Number: CD9201138924009006
PAGING NETWORK OF PHILADELPHIA INC, ALLENTOWN, PA: Fee Number: CD9201138924009015
PAGING NETWORK OF PHILADELPHIA INC, S. HARRISON TWP, NJ: Fee Number: CD9201138924009020
PAGING NETWORK OF PHILADELPHIA INC, PHILADELPHIA, PA: Fee Number: CD9201138924009024
PAGING NETWORK OF PHILADELPHIA INC, ELWOOD, NJ: Fee Number: CD9201138924010013
PAGING NETWORK OF PHILADELPHIA INC, READING, PA: Fee Number: CD9201138924012005
PAGING NETWORK OF PITTSBURGH INC, KITTANNING, PA: Fee Number: CD9201138924010008
PAGING NETWORK OF PITTSBURGH INC, KITTANNING, PA: Fee Number: CD9201138924010010
PAGING NETWORK OF SAN FRANCISCO INC, SAN RAMON, CA: Fee Number: CD9202108924044014

PAGING NETWORK OF SAN FRANCISCO INC, CALISTOGA, CA: Fee Number: CD9202108924044015
PAGING NETWORK OF SAN FRANCISCO INC, MARIPOSA, CA: Fee Number: CD9202108924067020
PAGING NETWORK OF SAN FRANCISCO INC, CALISTOGA, CA: Fee Number: CD9202108924067021
PAGING NETWORK OF SAN FRANCISCO INC, MARIPOSA, CA: Fee Number: CD9202108924067022
PAGING NETWORK OF SAN FRANCISCO INC, VACAVILLE, CA: Fee Number: CD9202108924067023
PAGING NETWORK OF SAN FRANCISCO INC, VACAVILLE, CA: Fee Number: CD9202108924067024
PAGING NETWORK OF SAN FRANCISCO INC, SAN RAMON, CA: Fee Number: CD9202108924067025
PAGING NETWORK OF WASHINGTON DC, HAYMARKET, VA: Fee Number: CD9201138924009005
PAGING NETWORK OF WASHINGTON DC, SUNSHINE, MD: Fee Number: CD9201138924009010
PAGING NETWORK OF WASHINGTON DC, SUNSHINE, MD: Fee Number: CD9201138924009013
PAGING NETWORK OF WASHINGTON INC, INDEPENDENT HILL, VA: Fee Number: CD9201138924009007
PAGING NETWORK OF WASHINGTON INC, HAYMARKET, VA: Fee Number: CD9201138924009011
PAGING NETWORK OF WASHINGTON INC, INDEPENDENT HILL, VA: Fee Number: CD9201138924009012
PAGING NETWORK OF WASHINGTON INC, SALISBURY, MD: Fee Number: CD9201138924009016
PAGING NETWORK OF WASHINGTON INC, TOWSON, MD: Fee Number: CD9201138924009023
PAGING NETWORK OF WASHINGTON INC, SILVER SPRING, MD: Fee Number: CD9201138924010014
PAGING NETWORK OF WASHINGTON INC, SILVER SPRING, MD: Fee Number: CD9201138924010019
PAGING NETWORK OF WASHINGTON INC, TOWSON, MD: Fee Number: CD9201138924011010
PAGING NETWORK OF WASHINGTON INC, EASTON, MD: Fee Number: CD9201138924012014
PAGING NETWORK OF WASHINGTON INC, SUNSHINE, MD: Fee Number: CD9201138924012015
PAGING OF SAN FRANCISCO INC, SUTTER, CA: Fee Number: CD9202108924067019
PAGING PARTNERS L P, NEW YORK, NY: Fee Number: CD9201138924011011
PAGING PARTNERS L P, CAMDEN, NJ: Fee Number: CD9201138924011012
PAGING PARTNERS L P, ATLANTIC CITY, NJ: Fee Number: CD9201138924011013
PAGING PLUS INC, SCRANTON, PA: Fee Number: CD9201138924007006
PHOENIX TUCSON PAGING CORP, TUCSON, AZ: Fee Number: CD9202108924042005
PHOENIX TUCSON PAGING CORP, PHOENIX, AZ: Fee Number: CD9202108924042007
PRIORITY COMMUNICATIONS INC, JACKSONVILLE, FL Fee Number: CD9201168924013003
RADIO CALL COMPANY INC, LLOYD, NY: Fee Number: CD9201138924007003
RADIO CALL COMPANY INC, MERIDEN, CT Fee Number: CD9201138924007010
SAN DIEGO PAGING INC, SAN DIEGO, CA: Fee Number: CD9202108924042008
SIGNAL ONE PAGING INC, POWAY, CA: Fee Number: CD9202108924068001
SKYTEL CORPORATION, BEACON, NY: Fee Number: CD9201108924005001
SKYTEL CORPORATION, RIDGE, NY: Fee Number: CD9201108924005002
SKYTEL CORPORATION, PEMBROKE, NH: Fee Number: CD9201108924005003
SKYTEL CORPORATION, ALPINE, NJ: Fee Number: CD9201108924005004
SKYTEL CORPORATION, MERIDEN, CT: Fee Number: CD9201108924005005
SKYTEL CORPORATION, ALPINE, NJ: Fee Number: CD9201108924005006
SKYTEL CORPORATION, NEW YORK, NY: Fee Number: CD9201108924005007
SKYTEL CORPORATION, BEACON, NY: Fee Number: CD9201108924005008
SKYTEL CORPORATION, RIDGE, NY: Fee Number: CD9201108924005009
SKYTEL CORPORATION, MERIDEN, CT: Fee Number: CD9201108924005010
SKYTEL CORPORATION, NEW YORK, NY: Fee Number: CD9201108924005011
SKYTEL CORPORATION, PEMBROKE, NH: Fee Number: CD9201108924005012
SKYTEL CORPORATION, TITUSVILLE, FL: Fee Number: CD9201168924013004
SKYTEL CORPORATION, WEST PALM BEACH, FL: Fee Number: CD9201168924013005
SKYTEL CORPORATION, TAMPA, FL: Fee Number: CD9201168924013006
SKYTEL CORPORATION, STONE MOUNTAIN, GA: Fee Number: CD9201168924013008
SKYTEL CORPORATION, WEST PALM BEACH, FL: Fee Number: CD9201168924013009
SKYTEL CORPORATION, STONE MOUNTAIN, GA: Fee Number: CD9201168924013010
SKYTEL CORPORATION, TAMPA, FL: Fee Number: CD9201168924013011
SKYTEL CORPORATION, TITUSVILLE, FL: Fee Number: CD9201168924013012
SKYTEL CORPORATION, CLEVELAND, OH: Fee Number: CD9201238924019006
SKYTEL CORPORATION, CHICAGO RIDGE, IL: Fee Number: CD9201238924019007
SKYTEL CORPORATION, CINCINATTI, OH: Fee Number: CD9201238924019008
SKYTEL CORPORATION, CHICAGO RIDGE, IL: Fee Number: CD9201238924019009
SKYTEL CORPORATION, ELDORADO SPRINGS, CO: Fee Number: CD9201308924021009
SKYTEL CORPORATION, ELDORADO SPRINGS, CO: Fee Number: CD9201308924021010
SKYTEL CORPORATION, VACAVILLE, CA: Fee Number: CD9202078924037003
SKYTEL CORPORATION, SANTA CRUZ, CA: Fee Number: CD9202078924037004
SKYTEL CORPORATION, VACAVILLE, CA: Fee Number: CD9202078924037005
SKYTEL CORPORATION, VENTURA, CA: Fee Number: CD9202078924037006
SKYTEL CORPORATION, SAN BRUNO, CA: Fee Number: CD9202078924037007
SKYTEL CORPORATION, SANTIAGO PEAK, CA: Fee Number: CD9202078924037008
SKYTEL CORPORATION, SAN BRUNO, CA: Fee Number: CD9202078924037009
SKYTEL CORPORATION, SANTA CRUZ, CA: Fee Number: CD9202078924037010
SKYTEL CORPORATION, SANTIAGO PEAK, CA: Fee Number: CD9202078924037011
SKYTEL CORPORATION, LOS ANGELES, CA: Fee Number: CD9202078924037012
SKYTEL CORPORATION, VENTURA, CA: Fee Number: CD9202078924037013
SKYTEL CORPORATION, LOS ANGELES, CA: Fee Number: CD9202078924037014
SNET PAGING INC, MANORVILLE, NY: Fee Number: CD9201098924001003
SNET PAGING INC, JOHNSTON, RI:Fee Number: CD9201098924001004

SNET PAGING INC, BEACON, NY: Fee Number: CD9201098924001006
SNET PAGING INC, BEACHWOOD, NJ: Fee Number: CD9201098924001007
SNET PAGING INC, GOFFSTOWN, NH: Fee Number: CD9201098924001008
SNET PAGING INC, NORWALK, CT: Fee Number: CD9201098924001009
SNET PAGING INC, MIDDLEFIELD, CT: Fee Number: CD9201098924001010
SNET PAGING INC, HOLYOKE, MA: Fee Number: CD9201098924001011
SNET PAGING INC, SHAPLEIGH, ME: Fee Number: CD9201098924001012
SNET PAGING INC, PAXTON, MA: Fee Number: CD9201098924001013
SNET PAGING INC, KINGSTON, MA: Fee Number: CD9201098924001014
SNET PAGING INC, NORWALK, CT: Fee Number: CD9201098924001015
SNET PAGING INC, MIDDLEFIELD, CT: Fee Number: CD9201098924001016
SNET PAGING INC, LEBANON, CT: Fee Number: CD9201098924001017
SNET PAGING INC, LEBANON, CT: Fee Number: CD9201098924001018
SNET PAGING INC, JOHNSTON, RI: Fee Number: CD9201098924001019
SNET PAGING INC, NEW YORK, NY: Fee Number: CD9201098924001020
SNET PAGING INC, MANORVILLE, NY: Fee Number: CD9201098924001021
SNET PAGING INC, GOFFSTOWN, NH: Fee Number: CD9201098924001022
SNET PAGING INC, BEACON, NY: Fee Number: CD9201098924001023
SNET PAGING INC, KINGSTON, MA: Fee Number: CD9201098924001025
SNET PAGING INC, PAXTON, MA: Fee Number: CD9201098924001050
SUMMIT MOBILE RADIO COMPANY, DOVER, NH: Fee Number: CD9201098924001041
SUMMIT MOBILE RADIO COMPANY, PORTLAND, ME: Fee Number: CD9201098924001042
SUNSHINE BEEPER COMPANY, CORAL GABLES, FL: Fee Number: CD9201168924013002
TEL AIR COMMUNICATIONS INC, STATEN ISLAND, NY: Fee Number: CD9201138924008007
TNI ASSOCIATES, BALTIMORE, MD: Fee Number: CD9201138924008001
TNI ASSOCIATES, MERIDEN, CT: Fee Number: CD9201138924008002
TNI ASSOCIATES, ATLANTIC CITY, NJ: Fee Number: CD9201138924008004
TNI ASSOCIATES, FALLS CHURCH, VA: Fee Number: CD9201138924008005
TNI ASSOCIATES, BALTIMORE, MD: Fee Number: CD9201138924008006
TNI ASSOCIATES, FALLS CHURCH, VA: Fee Number: CD9201138924008009
TNI ASSOCIATES, MANORVILLE, NY: Fee Number: CD9201138924008010
TNI ASSOCIATES, MANAHAWKIN, NJ: Fee Number: CD9201138924008012
TNI ASSOCIATES, TRENTON, NJ: Fee Number: CD9201138924008013
TNI ASSOCIATES, NEW YORK, NY: Fee Number: CD9201138924008011
TNI ASSOCIATES, PHILADELPHIA, PA: Fee Number: CD9201138924008003
TRI STATE RADIO COMPANY, MATAWAN, NJ: Fee Number: CD9201108924005026
TRI STATE RADIO COMPANY, PLAINVIEW, NY: Fee Number: CD9201108924005031
TRI STATE RADIO COMPANY, NEW YORK, NY: Fee Number: CD9201108924005032
TRI STATE RADIO COMPANY, PHILADELPHIA, PA: Fee Number: CD9201108924005033

[FR Doc. 00–762 Filed 1–12–00; 8:45 am]
BILLING CODE 6712–01–P

DEPARTMENT OF DEFENSE

48 CFR Parts 212, 242, 247, and 252

[DFARS Case 99–D009]

Defense Federal Acquisition Regulation Supplement; Transportation Acquisition Policy

AGENCY: Department of Defense (DoD).

ACTION: Proposed rule with request for comments.

SUMMARY: The Acting Director of Defense Procurement is proposing to amend the Defense Federal Acquisition Regulation Supplement (DFARS) to revise policy pertaining to the acquisition of transportation, transportation-related services, and transportation in supply contracts. The rule provides for the use of evaluation factors that address support for DoD readiness programs such as the Civil Reserve Air Fleet and the Voluntary Intermodal Sealift Agreement.

DATES: Comments on the proposed rule should be submitted in writing to the address shown below on or before March 13, 2000, to be considered in the formation of the final rule.

ADDRESSES: Interested parties should submit written comments on the proposed rule to: Defense Acquisition Regulations Council, Attn: Ms. Amy Williams, PDUSD (AT&L) DP (DAR), IMD 3D139, 3062 Defense Pentagon, Washington, DC 20301–3062. Telefax (703) 602–0350.

E-mail comments submitted via the Internet should be addressed to: dfars@acq.osd.mil

Please cite DFARS Case 99–D009 in all correspondence related to this proposed rule. E-mail correspondence should cite DFARS Case 99–D009 in the subject line.

FOR FURTHER INFORMATION CONTACT:

Ms. Amy Williams, (703) 602–0288.

SUPPLEMENTARY INFORMATION:

A. Background

This rule proposes amendments to the DFARS to revise policy pertaining to the acquisition of transportation, transportation-related services, and transportation in supply contracts. For contracts for transportation or transportation-related services, the rule specifies that contracting officers should consider using, as evaluation factors or subfactors, the offeror's record of claims involving loss or damage, provider availability, and support for DoD readiness programs such as the Civil Reserve Air Fleet and the Voluntary Intermodal Sealift Agreement. For contracts that will include a significant requirement for transportation of items outside the continental United States, the rule contains a requirement for use of an evaluation factor or subfactor that favors suppliers, third-party logistics providers, and integrated logistics managers that commit to using carriers that participate in one of the readiness programs. The rule implements a policy memorandum issued by the Under Secretary of Defense (Acquisition, Technology and Logistics) on January 15, 1998, Subject: Transportation Acquisition Policy. The January 15, 1998, memorandum is available via the Internet at http://www.acq.osd.mil/log/tp/trans__programs/defense__trans__library/tp__library.html. The rule also updates references and organizational names and addresses, and make other editorial changes.

This rule was not subject to Office of Management and Budget review under Executive Order 12866, dated September 30, 1993.

B. Regulatory Flexibility Act

The proposed rule is not expected to have a significant economic impact on a substantial number of small entities within the meaning of the Regulatory Flexibility Act, 5 U.S.C. 601, *et seq.*, because information available to DoD indicates that most small entities that are eligible to transport DoD cargo or passengers already participate in DoD readiness programs. Therefore, DoD has not performed an initial regulatory flexibility analysis. DoD invites comments from small businesses and other interested parties. DoD also will

consider comments from small entities concerning the affected DFARS subparts in accordance with 5 U.S.C. 610. Such comments should be submitted separately and should cite DFARS Case 99–D009.

C. Paperwork Reduction Act

The Paperwork Reduction Act does not apply because the rule does not impose any information collection requirements that require the approval of the Office of Management and Budget under 44 U.S.C. 3501, *et seq.*

List of Subjects in 48 CFR Parts 212, 242, 247, and 252

Government procurement.

Michele P. Peterson,

Executive Editor, Defense Acquisition Regulations Council.

Therefore, DoD proposes to amend 48 CFR Parts 212, 242, 247, and 252 as follows:

1. The authority citation for 48 CFR Parts 212, 242, 247, and 252 continues to read as follows:

Authority: 41 U.S.C. 421 and 48 CFR Chapter 1.

PART 212—ACQUISITION OF COMMERCIAL ITEMS

2. Subpart 212.6 is added to read as follows:

Subpart 212.6—Streamlined Procedures for Evaluation and Solicitation for Commercial Items

Sec.
212.602 Streamlined evaluation of offers.

Subpart 212.6 [Added]

212.602 Streamlined evaluation of offers.

(b)(i) For the acquisition of transportation and transportation-related services, also consider evaluating offers in accordance with the criteria at 247.206(1).

(ii) For the acquisition of transportation in supply contracts that will include a significant requirement for transportation of items outside the continental United States, also evaluate offers in accordance with the criterion at 247.301–71.

(iii) For the direct purchase of ocean transportation services, also evaluate offers in accordance with the criterion at 247.572–2(c)(2).

PART 242—CONTRACT ADMINISTRATION AND AUDIT SERVICES

242.1401 [Removed]

3. Section 242.1401 is removed.

4. Section 242.1402 is amended in paragraph (a)(2)(A)*(1)* by revising the last sentence; and in paragraph (a)(2)(C) by removing the word ''foreign'' the first time it appears and adding in its place the word ''freight''. The revised text reads as follows:

242.1402 Volume movements within the continental United States.

(a)(2) * * *

(A) * * *

(1) * * * If a volume movement appears likely, the transportation office reports a planned volume movement in accordance with DoD 4500.9R, Defense Transportation Regulation, Part II, Chapter 201.

* * * * *

242.1403 [Amended]

5. Section 242.1403 is amended in paragraph (a)(ii) by removing the last sentence.

6. Section 242.1405 is revised to read as follows:

242.1405 Discrepancies incident to shipment of supplies.

(a) See also DoD 4500.9R, Defense Transportation Regulation, Part II, Chapter 210, for discrepancy procedures.

242.1470 [Amended]

7. Section 242.1470 is amended by removing paragraph (a) and redesignating paragraphs (b) and (c) as paragraphs (a) and (b), respectively.

PART 247—TRANSPORTATION

8. Section 247.001 is added preceding subpart 247.1 to read as follows:

247.001 Definitions.

''Civil Reserve Air Fleet (CRAF)'' means a readiness program that provides for civil air carriers to contractually pledge their airlift resources to support DoD mobility requirements in times of emergency or contingency in return for a portion of DoD's peacetime airlift business.

''Voluntary Intermodal Sealift Agreement (VISA)'' means a readiness program that provides for commercial ocean carriers to contractually pledge their sealift resources to support DoD mobility requirements in times of emergency or contingency in return for a portion of DoD's peacetime sealift business or, when consistent with applicable policy, by priority consideration for such business.

247.103 [Removed]

9. Section 247.103 is removed.

247.104–3 [Removed]

10. Section 247.103–3 is removed.

11. Section 247.104–5 is revised to read as follows:

247.104–5 Citation of Government rate tenders.

(a) See DoD 4500.9–R, Defense Transportation Regulation, Part II, Chapter 206, for instructions on converting commercial bills of lading to Government bills of lading within CONUS.

12. Section 247.105 is amended by revising paragraphs (a)(i)(A), (a)(ii), and (a)(iii)(D) to read as follows:

247.105 Transportation assistance.

(a)(i) * * *

(A) Rates and prices (for evaluation of bids or routing purposes);

* * * * *

(ii) Within CONUS, the Military Traffic Management Command (MTMC), is responsible for the performance of traffic management functions. These functions include the direction, control, and supervision of all functions incident to the acquisition and use of commercial freight and passenger transportation services.

(iii) * * *

(D) Of supplies between points outside the CONUS, including Alaska and Hawaii, request assistance, rates, or other costs from the military service sponsoring the cargo. Direct the requests to:

Army:

Deputy Chief of Staff for Logistics, ATTN: DALO–TSP, Washington, DC 20310–0500

Navy:

Naval Supply Systems Command Code 4D, 5450 Carlisle Pike, P.O. Box 2050, Mechanicsburg, PA 17055–0791

Air Force:

Applicable overseas Air Force Command, HQ PACAF/LGT, 25 East Street, Suite I–305, Hickam AFB, HI 96853–5427

HQ USAFE/LGT, Unit 3050, Box 105, APO AE 09094–0105

HQ AFSPACECOM/LGT, 150 Vandenberg Street, Suite 1105, Peterson AFB, CO 80914–4540

Marine Corps:

Transportation Division, CMC Code LFT4, 2 Navy Annex, Washington, DC 20380–1775

* * * * *

13. Sections 247.200 and 247.206 are added to read as follows:

247.200 Scope of subpart.

This subpart does not apply to the operation of vessels owned by, or bareboat chartered by, the Government.

247.206 Preparation of solicitations and contracts.

(1) Consistent with FAR 15.304 and 215.304, consider using the following as evaluation factors or subfactors:

(i) Record of claims involving loss or damage;

(ii) Provider availability; and

(iii) Commitment of transportation assets to readiness support (e.g., CRAF and VISA.)

(2) To the maximum extent practicable, structure contracts and agreements to allow for their use by DoD contractors.

247.270–1 [Amended]

14. Section 247.270–1 is amended in the first sentence by removing the word ''peculiar'' and adding in its place the word ''unique''.

247.270–2 [Amended]

15. Section 247.270–2 is amended in the definition of ''Commodity rate'', in paragraph (2), by removing the word ''which'' and adding in its place the word ''that''.

247.270–3 [Removed and Reserved]

16. Section 247.270–3 is removed and reserved.

17. Section 247.270–4 is amended by revising paragraph (b) to read as follows:

247.270–4 Technical provisions.

* * * * *

(b) When including rail car, truck, or intermodal equipment loading and unloading, or other dock and terminal work under a stevedoring contract, include these requirements as separate items of work.

18. Section 247.270–5 is revised to read as follows:

247.270–5 Evaluation of bids and proposals.

As a minimum, require that offers include—

(a) Tonnage of commodity rates that apply to the bulk of the cargo worked under normal conditions;

(b) Labor-hour rates that apply to services not covered by commodity rates, or to work performed under hardship conditions; and

(c) Rates for equipment rental.

247.270–6 [Amended]

19. Section 247.270–6 is amended in the introductory text in the first sentence by removing the word ''contractor'' and adding in its place the word ''offeror'', and by removing the word ''elsewhere''.

20. Section 247.270–7 is revised to read as follows:

247.270–7 Contract clauses.

Use the following clauses in solicitations and contracts for stevedoring services as indicated:

(a) 252.247–7000, Hardship Conditions, in all solicitations and contracts.

(b) 252.247–7001, Price Adjustment, when using sealed bidding.

(c) 252.247–7002, Revision of Prices, when using negotiation.

(d) 252.247–7004, Indefinite Quantities—Fixed Charges, when the contract is an indefinite-quantity type and will provide for the payment of fixed charges.

(e) 252.247–7005, Indefinite Quantities—No Fixed Charges, when the contract is an indefinite-quantity type and will not provide for the payment of fixed charges.

(f) 252.247–7006, Removal of Contractor's Employees, in all solicitations and contracts.

(g) 252.247–7007, Liability and Insurance, in all solicitations and contracts.

247.271–1 [Amended]

21. Section 247.271–1 is amended in the first sentence by removing the word ''peculiar'' and adding in its place the word ''unique.''

22. Section 247.271–2 is amended by revising paragraph (a)(1) introductory text, paragraph (c) introductory text, and paragraphs (c)(1) and (c)(2)(ii) to read as follows:

247.271–2 Policy.

(a) * * *

(1) Use requirements contracts to acquire services for the—

* * * * *

(c) *Maximum requirements-minimum capability.* The contracting officer must—

(1) Establish realistic quantities on the Estimated Quantities Report in DoD 4500.9–R, Defense Transportation Regulation, Part IV;

(2) * * *

(ii) Will encourage maximum participation of small business concerns as offerors.

23. Section 247.271–3 is amended as follows:

a. In paragraph (a)(1) in the first and second sentences by removing the word ''shall'' and adding in its place the word ''must'';

b. By revising paragraph (a)(2); and

c. In paragraphs (b)(2)(iii), (c)(1), (c)(2), and (c)(3) by removing the word ''shall'' and adding in its place the word ''must.'' The revised text reads as follows:

247.271–3 Procedures.

(a) * * *

(a) The Commander, Military Traffic Management Command (MTMC), must designate the contracting activity when local commanders are unable to reach agreement.

* * * * *

24. Section 247.271–4 is amended as follows:

a. By revising paragraph (c) introductory text;

b. In paragraph (c)(4) and in the second sentence of paragraph (c)(5) by removing the word ''shall'' and adding in its place the word ''must'';

c. By revising paragraph (c)(6);

d. In paragraph (e) in the last sentence by removing the word ''shall'' and adding in its place the word ''must'';

e. By revising the last sentence of paragraph (f); and

f. By revising paragraphs (j) and (p). The revised text reads as follows:

247.271–4 Solicitation provisions, schedule formats, and contract clauses.

* * * * *

(c) In solicitations and resulting contracts, the schedules contained in DoD 4500.9R, Defense Transportation Regulation, Part IV, as provided by the installation personal property shipping office.

* * * * *

(6) Process any modification of schedule format, other than those authorized in paragraphs (c)(1) through (5) of this subsection, as a request for deviation to HQ MTMC.

* * * * *

(f) * * * When provisions are made for placing oral orders in accordance with FAR 16.505(a)(4), document the oral orders in accordance with department or agency instructions.

* * * * *

(j) When using the clause at FAR 52.216–21, Requirements, see 216.506(d), which prescribes an alteration to the clause.

* * * * *

(p) The clauses at FAR 52.257–8, Estimated Weight or Quantities Not Guaranteed, and 52.247–13, Accessorial Services—Moving Contracts.

25. Sections 247.301, 247.301–70, and 247.301–71 are added to read as follows:

247.301 General.

247.301–70 Definition.

''Integrated logistics managers'' or ''third-party logistics providers'' means providers of multiple logistics services. Some examples of logistics services are the management of transportation, demand forecasting, information management, inventory maintenance, warehousing, and distribution.

247.301–71 Evaluation factor or subfactor.

For contracts that will include a significant requirement for transportation of items outside CONUS, include an evaluation factor or subfactor that favors suppliers, third-party logistics providers, and integrated logistics managers that commit to using carriers that participate in one of the readiness programs (*e.g.,* CRAF and VISA).

26. Section 247.305–10 is revised to read as follows:

247.305–10 Packing, marking, and consignment instructions.

(b) Consignment instructions must include, as a minimum—

(i) The clear text and coded MILSTRIP data as follows:

(A) Consignee code and clear text identification of consignee and destination as published in—

(1) DoD 4000.25–6–M, Department of Defense Activity Address Directory (DoDAAD);

(2) DoD 4000.25–8–M, Military Assistance Program Address Directory (MAPAD) System; or

(3) Transportation Control and Movement Document. Reporting procedures and instructions must comply with DoD 4500.32–R, Military Standard Transportation and Movement Procedures (MILSTAMP).

(B) Project code, when applicable.

(C) Transportation priority.

(D) Required delivery date.

(ii) Non-MILSTRIP shipments must include data similar to that described in paragraph (b)(i) (A) through (D) of this subsection.

(iii) In amended shipping instructions include, in addition to the data requirements of paragraphs (b)(i) (A) through (D) of this subsection, the following, when appropriate:

(A) Name of the activity originally designated, from which the stated quantities are to be deducted; and

(B) Any other features of the amended instructions not contained in the basic contract.

(iv) When assigning contract administration responsibility in accordance with FAR 42.202, include the following instructions:

(A) Modification serial number; and, if a new line item is created by the issuance of shipping instructions;

(B) New line item number; and

(C) Existing line item number, if affected.

(v) For petroleum, oil, and lubricant products, instructions for diversions need not include the modification serial number and new line item number, when the instructions are—

(A) For diversions overseas to new destinations;

(B) Issued by an office other than that issuing the contract or delivery order; and

(C) Issued by telephone or electronic media.

27. Section 247.370 is amended by revising the introductory text and paragraph (b)(3) to read as follows:

247.370 Use of Standard Form 30 for consignment instructions.

When complete consignment instructions are not known initially, use the Standard Form (SF) 30, Amendment of Solicitation/Modification of Contract, to issue or amend consignment instructions, and when necessary, to confirm consignment instructions issued by telephone or electronic media.

* * * * *

(b) * * *

(3) For other contracts—

(i) Telephone—within five working days; and

(ii) Electronic media—consolidate on a monthly basis.

28. Sections 247.570 and 247.571 are revised to read as follows:

247.570 Scope.

This subpart—

(a) Implements the Cargo Preference Act of 1904 (the 1904 Act), 10 U.S.C. 2631, which applies to the ocean transportation of cargo owned by, or destined for use by, DoD. The 1904 Act does not apply to ocean transportation of—

(1) Products obtained for contributions to foreign assistance programs; or

(2) Products owned by agencies other than DoD.

(b) Does not specifically implement the Cargo Preference Act of 1954 (the 1954 Act), 46 U.S.C. 1241(b) (see FAR subpart 47.5). The 1954 Act is applicable to DoD, but DFARS coverage is not required because compliance with the 1904 Act historically has resulted in DoD exceeding the 1954 Act's requirements.

(c) Is an approved class deviation from FAR subpart 47.5 in its entirety for all DoD procurements subject to the 1904 Act.

247.571 Policy.

(a) DoD contractors must transport supplies, as defined in the clause at 252.247–7023, Transportation of Supplies by Sea, exclusively on U.S.-flag vessels unless—

(1) Those vessels are not available, and the procedures at 247.572–1(d)(1) or 247.572–2(d)(1) are followed;

(2) The proposed charges to the Government are higher than charges to private persons for the transportation of like goods, and the procedures at 247.572–1(d)(2) or 247.572–2(d)(2) are followed; or

(3) The Secretary of the Navy or the Secretary of the Army determines that the freight charged is excessive or unreasonable in accordance with 247.572–1(d)(3) or 247.572–2(d)(3).

(b) Contracts must provide for the use of Government-owned vessels when security classifications prohibit the use of other than Government-owned vessels.

(c)(1) Any vessel used under a time charter contract for the transportation of supplies must have any reflagging or repair work, as defined in the clause at 252.247–7025, Reflagging or Repair Work, performed in the United States or its territories, if the reflagging or repair work is performed—

(i) On a vessel for which the contractor submitted an offer in response to the solicitation for the contract; and

(ii) Prior to acceptance of the vessel by the Government.

(2) The Secretary of Defense may waive this requirement if the Secretary determines that such waiver is critical to the national security of the United States.

29. Sections 247.572–1 and 247.572–2 are revised to read as follows:

247.572–1 Ocean transportation incidental to a contract for supplies, services, or construction.

(a) This subsection applies when ocean transportation is not the principal purpose of the contract, and the cargo to be transported is owned by DoD or clearly identifiable for eventual use by DoD.

(b) The contracting officer must obtain assistance from the cognizant transportation activity (see 247.105) in developing—

(1) The Government estimate for transportation costs, irrespective of whether freight will be paid directly by the Government; and

(2) Shipping instructions and delivery terms for inclusion in solicitation and contracts that may involve transportation of supplies by sea.

(c) The contracting officer must ask each offeror whether it will transport supplies by sea if awarded the contract (see 247.573(a)). Even if the successful offeror responds that it does not anticipate sea transport of supplies, it may discover during contract performance that ocean transportation is required. In that event, the 1904 Act will apply to the contract, and the contractor must—

(1) Notify the Government that it now intends to use ocean transportation;

(2) Use U.S.-flag vessels unless certain conditions exist (see 247.571(a)); and

(3) Comply with the other requirements of the clause at 252.247–7023, Transportation of Supplies by Sea.

(d) If the contractor notifies the contracting officer that the contractor or a subcontractor considers that—

(1) No U.S.-flag vessels are available, the contracting officer must request confirmation of the nonavailability from—

(i) The Commander, Military Sealift Command (MSC), through the Contracts and Business Management Directorate, MSC; or

(ii) The Commander, Military Traffic Management Command (MTMC), through the Principal Assistant Responsible for Contracting, MTMC.

(2) The freight charges to the Government, the contractor, or any subcontractor are higher than charges for transportation of like goods to private persons, the contracting officer may approve a request for an exception to the requirement to ship on U.S.-flag vessels for a particular shipment.

(i) Prior to granting an exception, the contracting officer must request advice, oral or written, from the Commander, MSC, or the Commander, MTMC.

(ii) In advising the contracting officer whether to grant the exception, the Commander, MSC, or the Commander, MTMC, must consider, as appropriate, evidence from—

(A) Published tariffs;

(B) Industry publications;

(C) The Maritime Administration; and

(D) Any other available sources.

(3) The proposed freight charged by U.S.-flag carriers is excessive or otherwise unreasonable—

(i) The contracting officer must prepare a report in determination and finding format, and must—

(A) Take into consideration that the 1904 Act is, in part, a subsidy of the U.S.-flag commercial shipping industry that recognizes that lower prices may be available from foreign shippers. Therefore, a lower price for use of a foreign-flag vessel is not a sufficient basis, on its own, to determine that the freight rate proposed by the U.S.-flag carrier is excessive or otherwise unreasonable. However, such a price differential may indicate a need for further review;

(B) Consider, accordingly, not only excessive profits to the carrier (to include vessel owner or operator), if ascertainable, but also excessive costs to the Government (*i.e.,* costs beyond the economic penalty normally incurred by excluding foreign competition) resulting from the use of U.S.-flag vessels in extraordinarily inefficient circumstances; and

(C) Include an analysis of whether the cost is excessive, taking into account factors such as—

(1) The differential between freight charges by the U.S.-flag carrier and an estimate of what foreign-flag carriers would charge based upon a price analysis;

(2) A comparison of U.S.-flag rates charged on comparable routes;

(3) Efficiency of operation regardless of rate differential (*e.g.,* suitability of the vessel for the required transportation in terms of cargo requirements or vessel capacity, and the commercial reasonableness of vessel positioning required); and

(4) Any other relevant economic and financial considerations.

(ii) The contracting officer must forward the report to—

(A) The Commander, MSC, through the Contracts and Business Management Directorate, MSC; or

(B) The Commander, MTMC, through the Principal Assistant Responsible for Contracting, MTMC.

(iii) If in agreement with the contracting officer, the Commander, MSC, or the Commander, MTMC, will forward the report to the Secretary of the Navy or the Secretary of the Army, respectively, for a determination as to whether the freight charges are excessive or otherwise unreasonable.

247.572–2 Direct purchase of ocean transportation services.

(a) This subsection applies when ocean transportation is the principal purpose of the contract, including—

(1) Time charters;

(2) Voyage charters;

(3) Contracts for charter vessel services;

(4) Dedicated contractor contracts for charter vessel services;

(5) Ocean bills of lading; and

(6) Subcontracts under Government contracts or agreements for ocean transportation services.

(b) Coordinate these acquisitions, as appropriate, with the U.S. Transportation Command, the DoD single manager for commercial transportation and related services, other than Service-unique or theater-assigned transportation assets, in accordance with DoDD 5158.4, United States Transportation Command.

(c) All solicitations within the scope of this subsection must provide—

(1) A preference for U.S.-flag vessels in accordance with the 1904 Act; and

(2) An evaluation factor or subfactor for offeror participation in VISA.

(d) Do not award a contract of the type described in paragraph (a) of this subsection for a foreign-flag vessel unless—

(1) The Commander, MSC, and the Commander, MTMC, determines that no U.S.-flag vessels are available.

(i) The Commander, MSC and the Commander, MTMC, are authorized to make any determinations as to the availability of U.S.-flag vessels to ensure the proper use of Government and private U.S. vessels.

(ii) The contracting officer must request such determinations—

(A) For voyage and time charters through the Contracts and Business Management Directorate, MSC; and

(B) For ocean and intermodal transportation of DoD and DoD-sponsored cargoes, as applicable under contracts awarded by MTMC, including contracts for shipment of military household goods, through the Chiefs of the MTMC Ocean Cargo Clearance Authority.

(iii) In the absence of regularly scheduled U.S.-flag service to fulfill stated DoD requirements under MTMC solicitations or rate requests, the Commander, MTMC, may grant, on a case-by-case basis, an on-going nonavailability determination for foreign-flag service approval with pre-determined review date(s);

(2) The contracting officer determines that the U.S.-flag carrier has proposed to the Government freight charges that are higher than charges to private persons for transportation of like goods, and obtains the approval of the Commander, MSC, or the Commander, MTMC; or

(3) The Secretary of the Navy or the Secretary of the Army determines that the proposed freight charges for U.S.-flag vessels are excessive or otherwise unreasonable.

(i) After considering the factors in 247.572–(d)(3)(i) (A) and (B), if the contracting officer concludes that the freight charges proposed by U.S.-flag carriers may be excessive or otherwise unreasonable, the contracting officer must prepare a report in determination and finding format that includes, as appropriate—

(A) An analysis of the carrier's costs in accordance with FAR subpart 15.4, or profit in accordance with 215.404–4. The costs or profit should not be so high as to make it unreasonable to apply the preference for U.S.-flag vessels;

(B) A description of efforts taken pursuant to FAR 15.405, to negotiate a reasonable price. For the purpose of FAR 15.405(d), this report is the referral to a level above the contracting officer; and

(C) An analysis of whether the costs are excessive (i.e., costs beyond the economic penalty normally incurred by excluding foreign competition), taking

into consideration factors such as those listed at 247.572–1(d)(3)(i)(C).

(ii) The contracting officer must forward the report to—

(A) The Commander, MSC, through the Contracts and Business Management Directorate, MSC; or

(B) The Commander, MTMC, through the Principal Assistant Responsible for Contracting, MTMC.

(iii) If in agreement with the contracting officer, the Commander, MSC, or the Commander, MTMC, will forward the report to the Secretary of the Navy or the Secretary of the Army, respectively, for a determination as to whether the freight charges are excessive or otherwise unreasonable.

PART 252—SOLICITATION PROVISIONS AND CONTRACT CLAUSES

30. Section 252.247–7000 is revised to read as follows:

252.247–7000 Hardship Conditions.

As prescribed in 247.270–7(a), use the following clause:

Hardship Conditions (XXX 2000)

(a) The Contractor shall promptly notify the Contracting Officer of unusual ship, dock, or cargo conditions associated with loading or unloading a particular cargo, that will work a hardship on the Contractor if loaded or unloaded at the basic commodity rates. The Contractor shall provide the notification in advance of work, if feasible, but not later than the time of sailing.

(b) Unusual conditions include, but are not limited to, inaccessibility of place of stowage to the ship's cargo gear, side port operations, and small quantities of cargo in any one hatch.

(c) The Contracting Officer shall investigate the conditions promptly after receiving the notice. If the Contracting Officer finds that the conditions are unusual and do materially affect the cost of loading or unloading, the Contracting Officer will authorize payment at the applicable man-hour rates set forth in the schedule of rates of this contract. The Contractor shall submit hardship claims to the Contracting Officer within ten working days of the vessel sailing time.

(End of clause)

252.247–7003 [Removed and Reserved]

31. Section 252.247–7003 is removed and reserved.

252.247–7004 [Amended]

32. Section 252.247–7004 is amended in the introductory text by revising the reference ''247.270–7(e)'' to read ''247.270–7(d)''.

252.247–7005 [Amended]

33. Section 252.247–7005 is amended in the introductory text by revising the reference ''247.270–7(f)'' to read ''247.270–7(e)''.

252.247–7006 [Amended]

34. Section 252.247–7006 is amended in the introductory text by revising the reference ''247.270–7(g)'' to read ''247.270–7(f)''.

252.247–7007 [Amended]

35. Section 252.247–7007 is amended in the introductory text by revising the reference ''247.270–7(h)'' to read ''247.270–7(g)''.

36. Section 252.247–7020 is revised to read as follows:

252.247–7020 Additional Services.

As prescribed in 247.271–4(o), use the following clause:

Additional Services (XXX 2000)

The Contractor shall provide additional services not included in the Schedule, but required for satisfactory completion of the services ordered under this contract, at a rate comparable to the rate for like services as contained in tenders on file with the Military Traffic Management Command in effect at time of order.

(End of clause)

[FR Doc. 00–768 Filed 1–12–00; 8:45 am]

BILLING CODE 5000–04–M

DEPARTMENT OF DEFENSE

48 CFR Parts 242 and 253

[DFARS Case 99–D026]

Defense Federal Acquisition Regulation Supplement; Production Surveillance and Reporting

AGENCY: Department of Defense (DoD).

ACTION: Proposed rule with request for comments.

SUMMARY: The Acting Director of Defense Procurement is proposing to amend the Defense Federal Acquisition Regulation Supplement (DFARS) to revise the criteria for determining the degree of production surveillance needed for DoD contracts and to delete obsolete forms. The rule requires contract administration offices to conduct a risk assessment of each contractor to determine the degree of production surveillance needed.

DATES: Comments on the proposed rule should be submitted in writing to the address shown below on or before March 13, 2000, to be considered in the formation of the final rule.

ADDRESSES: Interested parties should submit written comments on the proposed rule to: Defense Acquisition Regulations Council, Attn: Mr. Rick Layser, PDUSD(AT&L)DP(DAR), IMD 3D139, 3062 Defense Pentagon, Washington, DC 20301–3062. Telefax (703) 602–0350.

E-mail comments submitted via the Internet should be addressed to: dfars@acq.osd.mil

Please cite DFARS Case 99–D026 in all correspondence related to this proposed rule. E-mail correspondence should cite DFARS Case 99–D026 in the subject line.

FOR FURTHER INFORMATION CONTACT: Mr. Rick Layser, (703) 602–0293.

SUPPLEMENTARY INFORMATION:

A. Background

This rule proposes the following changes to the DFARS:

1. Elimination of the requirement at 242.1104 for contract administration offices to perform pre-delivery on-site production surveillance for certain categories of contracts. The rule instead requires contract administration offices to conduct a risk assessment of each contractor to determine the degree of production surveillance needed for contracts awarded to that contractor.

2. Deletion of an obsolete reference to cost/schedule control system requirements at 242.1106(a).

3. Deletion of DD Form 375, Production Progress Report; DD Form 375c, Production Progress Report (Continuation); DD Form 375–2, Delay in Delivery; and the prescription for their use at 242.1106(c). Production progress reporting presently is accomplished through use of an automated computer system (ALERTS).

This rule was not subject to Office of Management and Budget review under Executive Order 12866, dated September 30, 1993.

B. Regulatory Flexibility Act

The proposed rule is not expected to have a significant economic impact on a substantial number of small entities within the meaning of the Regulatory Flexibility Act, 5 U.S.C. 601, *et seq.*, because the proposed changes primarily affect the allocation of Government resources to production surveillance functions. Therefore, DoD has not performed an initial regulatory flexibility analysis. DoD invites comments from small businesses and other interested parties. DoD also will consider comments from small entities concerning the affected DFARS subparts in accordance with 5 U.S.C. 610. Such comments should be submitted separately and should cite FARS Case 99–D026.

C. Paperwork Reduction Act

The Paperwork Reduction Act does not apply because the rule does not impose any information collection requirements that require the approval

of the Office of Management and Budget under 44 U.S.C. 3501, *et seq.*

List of Subjects in 48 CFR Parts 242 and 253

Government procurement.

Michele P. Peterson,

Executive Editor, Defense Acquisition Regulations Council.

Therefore, DoD proposes to amend 48 CFR Parts 242 and 253 as follows:

The authority citation for 48 CFR, Parts 242 and 253 continues to read as follows:

Authority: 41 U.S.C. 421 and 48 CFR Chapter 1.

PART 242—CONTRACT ADMINISTRATION AND AUDIT SERVICES

2. Section 242.1104 is revised to read as follows:

242.1104 Surveillance requirements.

(a) The cognizant contract administration office (CAO) must—

(i) Conduct a risk assessment of each contractor to determine the degree of production surveillance needed for contracts awarded to that contractor;

(ii) Develop a contract production surveillance plan based on the risk level determined during the risk assessment. The risk assessment must consider information provided by the contractor and the contracting office; and

(iii) Monitor contract progress and identify potential contract delinquencies in accordance with the contract surveillance plan.

3. Section 242.1106 is revised to read as follows:

242.1106 Reporting requirements.

(a) See DoD 5000.2–R, Mandatory Procedures for Major Defense Acquisition Programs (MDAPs) and Major Automated Information System (MAIS) Acquisition Programs.

(b)(i) Within four working days after receipt of the contractor's report, the CAO must provide the report and any required comments to the contracting officer and, unless otherwise specified in the contract, the inventory control manager.

(ii) If the contractor's report indicates that the contract is on schedule and the CAO agrees, the CAO does not need to add further comments. In all other cases, the CAO must add comments and recommend a course of action.

PART 253—FORMS

4. The note at the end of Part 253 is amended by removing the following entries:

''253.303–375 Production Progress Report.

253.303–375c Production Progress Report (Continuation).

253.303–375–2 Delay in Delivery.''

[FR Doc. 00–767 Filed 1–12–00; 8:45 am]

BILLING CODE 5000–04–M

Notices

Federal Register

Vol. 65, No. 9

Thursday, January 13, 2000

This section of the FEDERAL REGISTER contains documents other than rules or proposed rules that are applicable to the public. Notices of hearings and investigations, committee meetings, agency decisions and rulings, delegations of authority, filing of petitions and applications and agency statements of organization and functions are examples of documents appearing in this section.

DEPARTMENT OF AGRICULTURE

Office of the Secretary

Commission on 21st Century Production Agriculture

ACTION: Notice of meeting.

SUMMARY: The U.S. Department of Agriculture (USDA) has established the Commission on 21st Century Production Agriculture. In accordance with Section 10(a)(2) of the Federal Advisory Committee Act (FACA), notice is hereby given of a meeting in November of the Commission on 21st Century Production Agriculture. The purpose of this meeting will be to discuss the future role of the Federal Government in support of production agriculture. The meeting is open to the public.

PLACE, DATE, AND TIME OF MEETING: This meeting will be held January 27–28, 2000, in Room 221–A Jamie L. Whitten Federal Building, U.S. Department of Agriculture, 1400 Independence Avenue, SW, Washington, DC 20250, from 9:00 a.m. est until 5:00 p.m. est.

FOR FURTHER INFORMATION CONTACT: Timothy M. Peters (202–720–4860), Assistant Director, Commission on 21st Century Production Agriculture, Room 3702 South Building, 1400 Independence Avenue, SW, Washington, DC 20250–0524.

Dated: January 3, 2000.

Keith J. Collins,

Chief Economist.

[FR Doc. 00–783 Filed 1–12–00; 8:45 am]

BILLING CODE 3410–01–M

DEPARTMENT OF AGRICULTURE

Forest Service

Threemile Stewardship Project; Custer National Forest, Ashland Ranger District; Powder River and Rosebud Counties, Montana

AGENCY: Forests Service, USDA.

ACTION: Notice; intent to prepare an environmental impact statement.

SUMMARY: The Forest Service will prepare an Environmental Impact Statement (EIS) to disclose the environmental effects of the Threemile Stewardship Project. This project will focus on moving ecosystems toward their desired conditions through management activities that would maintain or improve the diversity of ponderosa pine, woody draw and grassland vegetative communities. The project was selected for Stewardship Contracting. The Forest Service is the lead agency for the preparation of this document.

DATES: Comments concerning the scope of the analysis should be received in writing by February 29, 2000.

ADDRESSES: Send written comments to Elizabeth A. McFarland, District Ranger, Ashland Ranger District, P.O. Box 168, Ashland, Montana 59003. Or send electronic mail comments to rhecker/rl__custer@fs.fed.us.

FOR FURTHER INFORMATION CONTACT: Ronald E. Hecker, Project Coordinator, (406) 784–2344 or rhecker/rl—custer@fs.fed.us.

SUPPLEMENTARY INFORMATION: The Threemile Stewardship Project is one of nine stewardship ''end'' result contract demonstration projects in the northern Region of the Forest Service that is authorized under Section 347 of the 1999 Appropriations Bill.

The focus of this project is moving ecosystems toward their desired condition through management activities that would maintain or improve the diversity of the ponderosa pine, woody draw and grassland vegetative communities. This project is designed to achieve vegetation management of these plant communities through the use of partnerships and collaboration as defined through Stewardship Contracting (Section 347, 1999 Appropriations Bill).

The objective of this project is the performance of services to achieve land management goals on the National Forest System lands that meet local and rural community needs (improve conditions on the land while providing for local jobs). Land management goals may include, but are not limited to:

- Commercial and non-commercial cutting or removal of trees to promote healthy forest stands, woody draws, and grasslands and/or to reduce fire hazard;
- Prescribed burning to improve the composition, structure, condition and health of forests stands, woody draws and grasslands;
- Road maintenance and reclamation of un-needed roads;
- Control of noxious weeds; and
- Restoration and maintenance of wildlife habitat.

The Stewardship proposal would look at the over-all needs of the 32,200 acres within the project area, which is located between Ten Mile Creek and US Highway 212 on the southeast portion of the Ashland Ranger District. The focus is ''outcomes'' and not ''outputs''. The value of forest products removed would be used as an offset against the cost of services received (exchange of goods for services on a value for value basis). An example might be trading saw logs for treatment of noxious weeds or road rehabilitation.

Along with the issuance of a project-scoping letter, later this month, an information meeting is scheduled for February 10, 2000, at the Ashland Ranger District, to provide the public with additional information about the project and process. Written or oral responses will be accepted until February 29, 2000.

The Responsible Official for this EIS for decision is Nancy T. Curriden, Forest Supervisor, 1310 Main Street, P.O. Box 50760, Billings, Montana 49105.

The comment period on the draft environment impact statement will be 45 days from the date the Environmental Protection Agency publishes the notice of availability in the **Federal Register**.

A Draft EIS is schedules for release to the public for comment in August 2000, and the Final EIS is scheduled for completion in December 2000.

The Forest Service believes it is important to give reviewers notice at this early stage of several court rulings related to public participation in the environmental review process. First,

reviewers or draft environmental impact statements must structure their participation in the environmental review of the proposal so that it is meaningful and alerts an agency to the reviewer's position and contentions. *Vermont Yankee Nuclear Power Corp.* v. *NRDC, 435 U.S. 519, 553 (1978).* Also, environmental objections that could be raised at the draft environmental impact statement stage but that are not raised until after completion of the final environmental impact statement may be waived or dismissed by the courts. *Wisconsin Heritages, Inc.* v. *Harris,* 490 F. Supp. 1334, 1338 (E. D. Wis. 1980). Because of these courts rulings, it is very important that those interested in this proposed action participate by the close of the 45-day comment period so that substantive comments and objections are made available to the Forest Service at a time when it can meaningfully consider them and respond to them in the final environmental impact statement.

To assist the Forest Service in identifying and considering issues and concerns on the proposed action, comments on the draft environmental impact statement should be as specific as possible. It is helpful if comments refer to specific pages or chapters of the draft statement. Comments may also address the adequacy of the draft environmental impact statement or the merits of the alternatives formulated and discussed in the statement. Reviewers may wish to refer to the Council on Environmental Quality Regulations for implementing the procedural provisions of the National Environmental Policy Act at 40 CFR 1503.3 in addressing these points.

Dated: January 7, 2000.

Nancy T. Curriden,

Forest Supervisor.

[FR Doc. 00–798 Filed 1–12–00; 8:45 am]

BILLING CODE 3410–11–M

DEPARTMENT OF AGRICULTURE

Forest Service

Loon Mountain Ski Area Improvements and Expansion

AGENCY: Forest Service, USDA.

ACTION: Cancellation of a supplement to a final environmental impact statement.

SUMMARY: On August 4, 1998, a Notice of Intent (NOI) to prepare a Supplement to the Loon Mountain Ski Area South Mountain Expansion Project Final Environmental Impact Statement (FEIS) for the White Mountain National Forest was published in the **Federal Register** (Volume 63, Number 149) pages 41541–41543. This notice is being withdrawn because the Forest service will prepare an environmental impact statement (EIS) rather than a supplement to the FEIS to disclose the environmental effects of Loon Mountain Recreation Corporation's proposal to develop and expand recreational facilities at Loon Mountain Ski Resort. This decision is based on changes to the original purpose and need for the Proposed Action since the FEIS was prepared. The Forest Service NOI to prepare a supplemental is hereby rescinded.

FOR FURTHER INFORMATION CONTACT: Jay Strand, Project Coordinator, US Forest Service, 99 Ranger Road, Rochester, Vermont, 05767; TTY phone (802) 767–4261; voice phone (802) 767–4261 ext. 522; FAX (802) 767–4777; or E-mail, jstrand/r9__gmfl@fs.fed.us.

Dated: December 17, 1999.

Donna Hepp,

Forest Supervisor.

[FR Doc. 00–837 Filed 1–12–00; 8:45 am]

BILLING CODE 3410–11–M

ARCHITECTURAL AND TRANSPORTATION BARRIERS COMPLIANCE BOARD

Passenger Vessel Access Advisory Committee; Meeting

AGENCY: Architectural and Transportation Barriers Compliance Board.

ACTION: Notice of meeting.

SUMMARY: The Architectural and Transportation Barriers Compliance Board (Access Board) has established an advisory committee to assist it in developing a proposed rule on accessibility guidelines for newly constructed and altered passenger vessels covered by the Americans with Disabilities Act. This document gives notice of the dates, times, and location of the next meeting of the Passenger Vessel Access Advisory Committee (committee).

DATES: The next meeting of the committee is scheduled for February 9 through 11, 2000, beginning at 9:00 a.m. and ending at 5:00 p.m. each day.

ADDRESSES: The meeting will be held in the 3rd floor training room at 1331 F Street, NW, Washington, DC.

FOR FURTHER INFORMATION CONTACT: Paul Beatty, Office of Technical and Information Services, Architectural and Transportation Barriers Compliance Board, 1331 F Street, NW., suite 1000, Washington, DC 20004–1111. Telephone number (202) 272–5434 extension 119 (Voice); (202) 272–5449 (TTY). E-mail address: pvaac@access-board.gov. This document is available in alternate formats (cassette tape, Braille, large print, or computer disk) upon request. This document is also available on the Board's Internet Site at http://www.access-board.gov/notices/pvaacmtg.htm.

SUPPLEMENTARY INFORMATION: The Architectural and Transportation Barriers Compliance Board (Access Board) established a Passenger Vessel Access Advisory Committee (committee) to assist the Board in developing proposed accessibility guidelines for newly constructed and altered passenger vessels covered by the Americans with Disabilities Act. 63 FR 43136 (August 12, 1998). The committee is composed of owners and operators of various passenger vessels; persons who design passenger vessels; organizations representing individuals with disabilities; and other individuals affected by the Board's guidelines.

The committee will meet on the dates and at the location announced in this notice. The meeting is open to the public. The facility is accessible to individuals with disabilities. Individuals who require sign language interpreters or real-time captioning systems should contact Paul Beatty by February 1, 2000.

Lawrence W. Roffee,

Executive Director.

[FR Doc. 00–851 Filed 1–12–00; 8:45 am]

BILLING CODE 8150–01–P

DEPARTMENT OF COMMERCE

Bureau of the Census

[Docket Number 000103001–0001–01]

RIN 0607–XX51

Annual Retail Trade Survey

AGENCY: Bureau of the Census, Commerce.

ACTION: Notice of Determination.

SUMMARY: The Bureau of the Census (U.S. Census Bureau) is conducting the Annual Retail Trade Survey. The U.S. Census Bureau has determined that it needs to collect data covering annual sales, e-commerce sales, percent of e-commerce sales to customers located outside the United States, year-end inventories, purchases, accounts receivables, and, for select industries, merchandise line sales, and percent of sales by class of customer.

FOR FURTHER INFORMATION CONTACT: Scott Scheleur or Dorothy Engleking,

Service Sector Statistics Division, on (301) 457–2713.

SUPPLEMENTARY INFORMATION: The Annual Retail Trade Survey is a continuation of similar retail trade surveys conducted each year since 1951 (except 1954). It provides, on a comparable classification basis, annual sales, year-end inventories, purchases, and inventories for 1998 and 1999. These data are not available publicly on a timely basis from nongovernmental or other governmental sources.

The U.S. Census Bureau will require a selected sample of firms operating retail establishments in the United States (with sales size determining the probability of selection) to report in the 1999 Annual Retail Trade Survey. We will furnish report forms to the firms covered by this survey and will require their submissions within thirty days after receipt. The sample will provide, with measurable reliability, statistics on the subjects specified above.

The U.S. Census Bureau is authorized to take surveys necessary to furnish current data on the subjects covered by the major censuses authorized by Title 13, United States Code, Sections 182, 224, and 225. This survey will provide continuing and timely national statistical data on retail trade for the period between economic censuses. The data collected in this survey will be within the general scope and nature of those inquiries covered in the economic census. These data will provide a sound statistical basis for the formation of policy by various government agencies. These data also apply to a variety of public and business needs.

Notwithstanding any other provision of law, no person is required to respond to, nor shall a person be subject to a penalty for failure to comply with, a collection of information subject to the requirements of the Paperwork Reduction Act (PRA) unless that collection of information displays a current valid Office of Management and Budget (OMB) control number. In accordance with the PRA, 44 United States Code, Chapter 35, the OMB approved the Annual Retail Trade Survey under OMB Control Number 0607–0013. We will furnish report forms to organizations included in the survey, and additional copies are available on written request to the Director, U.S. Census Bureau, Washington, DC 20233–0101.

Based upon the foregoing, I have directed that an annual survey be conducted for the purpose of collecting these data.

Dated: December 27, 1999.

Kenneth Prewitt,

Director, Bureau of the Census.

[FR Doc. 00–772 Filed 1–12–00; 8:45 am]

BILLING CODE 3510–07–P

DEPARTMENT OF COMMERCE

Bureau of the Census

[Docket Number 000103002–0002–01]

RIN 0607–XX52

Service Annual Survey

AGENCY: Bureau of the Census, Commerce.

ACTION: Notice of Determination.

SUMMARY: The U.S. Census Bureau is conducting the 1999 Service Annual Survey. The results of the service annual program were previously published on a Standard Industrial Classification basis. Beginning with the survey year 1999, we will publish data using the new North American Industry Classification System (NAICS). With the NAICS implementation, the Service Annual Survey incorporates the previous Transportation Annual Survey, the Annual Survey of Communication Services, and the publishing industry from the Annual Survey of Manufactures into one service program. With NAICS, 149 new and emerging industries have been added to the Service Annual Survey, including air couriers, publishing, sound recording, waste management and remediation services, and selected financial industries. A new Information Sector also has been added to the survey that brings together industries that produce, manipulate, and distribute information and cultural products; that provide the means to transmit or distribute these products; and that process data or communications.

FOR FURTHER INFORMATION CONTACT: Ruth A. Bramblett, Chief, Current Services Branch, Service Sector Statistics Division, on (301) 457–2766.

SUPPLEMENTARY INFORMATION:

Background on the Service Annual Survey

Beginning with the survey year 1999, we will publish the Service Annual Survey data using NAICS. The structure of NAICS was developed in a series of meetings among the United States, Canada, and Mexico in the early to mid-1990s. NAICS recognizes the rapid changes in both the U.S. and world economies by providing a means to classify new and emerging industries. The system was constructed on a production-oriented, or supply-based, conceptual framework.

Effective with the 1999 survey, the Census Bureau changed the Service Annual Survey questionnaires to reflect the many changes brought by NAICS. We expanded the number of form types and developed these forms to be more tailored to the industries they survey. The goal was to maximize industry coverage within our available resources.

The revision to the Service Annual Survey has increased industry coverage. Previously, a single summary report was produced for each of the three surveys. We now will produce multiple data products and reports by various sectors.

The Service Annual Survey provides dollar volume estimates for specific industries in the following NAICS sectors:

- Transportation and Warehousing (48–49)
- Information (51)
- Finance and Insurance (52)
- Real Estate, Rental, and Leasing (53)
- Professional, Scientific, and Technical (54)
- Administrative and Support, Waste Management and Remediation Services (56)
- Health and Social Assistance (62)
- Arts, Entertainment, and Recreation (71)
- Other Services (81)

The Service Annual Survey produces estimates of total receipts for all industries covered and source of receipts and other expanded data items for the following sectors:

- Trucking (484)
- Information (51)
- Selected industries in Finance and Insurance (52)
- Computer Systems Design and Related Services Industry (5415)
- Health and Social Assistance Sector (62), except subsector 624 (Social Assistance)

For the first time, this annual survey will collect e-commerce receipts/revenue for all services industries. In addition, the survey will collect exported services (receipts/revenue) for specified industries in the Information Sector.

Response to Comments

The Notice of Consideration for the Service Annual Survey was published in the **Federal Register** on September 24, 1999 (64 FR 51736). No comments were received in response to that notice, and we made no significant changes since then to the Service Annual Survey program.

Paperwork Reduction Act

Notwithstanding any other provision of law, no person is required to respond

to, nor shall a person be subject to a penalty for failure to comply with, a collection of information subject to the requirements of the Paperwork Reduction Act (PRA) unless that collection of information displays a current valid Office of Management and Budget (OMB) control number. In accordance with the PRA, 44 United States Code (U.S.C.), Chapter 35, the OMB approved the 1999 Service Annual Survey under OMB Control Number 0607–0422. We will furnish report forms to organizations included in the survey, and additional copies are available on written request to the Director, U.S. Census Bureau, Washington, DC 20233–0101.

Program Requirements

The Census Bureau conducts surveys necessary to furnish current data on subjects covered by the major censuses authorized by Title 13, U.S.C. The Service Annual Survey provides continuing and timely national statistical data for a period between the economic censuses. The next economic census is for the year 2002. Data collected in this survey are within the general scope, type, and character of those inquiries covered in the economic census.

In accordance with Title 13, U.S.C. 182, 224, and 225, the Census Bureau has determined that 1999 data on total receipts, and total revenue and expenses for selected service industries are needed to provide a sound statistical basis for the formation of policy by various governmental agencies, and that these data also apply to a variety of public and business needs. Selected service industries include health, telecommunications, publishing, waste management, transportation, and finance industries. These data are not publicly available from nongovernment or other governmental sources.

The Census Bureau needs reports only from a limited sample of service sector firms in the United States. The probability of a firm's selection is based on its revenue size (estimated from payroll). We are mailing report forms to the firms covered by this survey and require their submission within thirty days after receipt.

Based upon the foregoing, I have directed that the Service Annual Survey be conducted for the purpose of collecting these data.

Dated: December 27, 1999.

Kenneth Prewitt,

Director, Bureau of the Census.

[FR Doc. 00–770 Filed 1–12–00; 8:45 am]

BILLING CODE 3510–07–P

DEPARTMENT OF COMMERCE

Bureau of the Census

[Docket Number 000105005–0005–01]

RIN 0607–XX53

Annual Trade Survey

AGENCY: Bureau of the Census, Commerce.

ACTION: Notice of Determination.

SUMMARY: The Bureau of the Census (U.S. Census Bureau) is conducting the Annual Trade Survey. The U.S. Census Bureau has determined that it needs to collect data covering annual sales, e-commerce sales, year-end inventories, and purchases.

FOR FURTHER INFORMATION CONTACT: Scott Scheleur or Dorothy Engleking, Service Sector Statistics Division, on (301) 457–2713.

SUPPLEMENTARY INFORMATION: The Annual Trade Survey is a continuation of similar wholesale trade surveys conducted each year since 1978. It provides, on a comparable classification basis, annual sales, year-end inventories, and purchases for 1998 and 1999. These data are not available publicly on a timely basis from nongovernmental or other governmental sources.

The U.S. Census Bureau will require a selected sample of firms operating merchant wholesale establishments in the United States (with sales size determining the probability of selection) to report in the 1999 Annual Trade Survey. We will furnish report forms to the firms covered by this survey and will require their submissions within thirty days after receipt. The sample will provide, with measurable reliability, statistics on the subjects specified above.

The U.S. Census Bureau is authorized to take surveys necessary to furnish current data on the subjects covered by the major censuses authorized by Title 13, United States Code, Sections 182, 224, and 225. This survey will provide continuing and timely national statistical data on wholesale trade for the period between economic censuses. The data collected in this survey will be within the general scope and nature of those inquiries covered in the economic census. These data will provide a sound statistical basis for the formation of policy by various government agencies. These data also apply to a variety of public and business needs.

Notwithstanding any other provision of law, no person is required to respond to, nor shall a person be subject to a penalty for failure to comply with, a collection of information subject to the requirements of the Paperwork Reduction Act (PRA) unless that collection of information displays a current valid Office of Management and Budget (OMB) control number. In accordance with the PRA, 44 United States Code, Chapter 35, the OMB approved the Annual Trade Survey under OMB Control Number 0607–0195. We will furnish report forms to organizations included in the survey, and additional copies are available on written request to the Director, U.S. Census Bureau, Washington, DC 20233–0101.

Based upon the foregoing, I have directed that an annual survey be conducted for the purpose of collecting these data.

Dated: December 27, 1999.

Kenneth Prewitt,

Director, Bureau of the Census.

[FR Doc. 00–771 Filed 1–12–00; 8:45 am]

BILLING CODE 3510–07–P

DEPARTMENT OF COMMERCE

International Trade Administration

Antidumping or Countervailing Duty Order, Finding, or Suspended Investigation; Opportunity To Request Administrative Review

AGENCY: Import Administration, International Trade Administration, Department of Commerce.

ACTION: Notice of opportunity to request administrative review of Antidumping or Countervailing Duty Order, Finding, or Suspended Investigation.

Background

Each year during the anniversary month of the publication of an antidumping or countervailing duty order, finding, or suspension of investigation, an interested party, as defined in section 771(9) of the Tariff Act of 1930, as amended, may request, in accordance with section 351.213 of the Department of Commerce (the Department) Regulations (19 CFR 351.213 (1997)), that the Department conduct an administrative review of that antidumping or countervailing duty order, finding, or suspended investigation.

Opportunity To Request a Review

Not later than the last day of January 2000, interested parties may request administrative review of the following orders, findings, or suspended investigations, with anniversary dates in January for the following periods:

Antidumping Duty Proceedings and Period

Brazil: Brass Sheet and Strip, A–351–603—1/1/99–12/31/99
Brazil: Stainless Steel Wire Rod, A–351–819—1/1/99–12/31/99
Canada: Brass Sheet and Strip, A–122–601—1/1/99–12/31/99
Canada: Color Picture Tubes, A–122–605—1/1/99–12/31/99
France: Anhydrous Sodium Metasilicate (ASM), A–427–098—1/1/99–12/31/99
France: Stainless Steel Wire Rods, A–427–811—1/1/99–12/31/99
Japan: Color Picture Tubes, A–588–609—1/1/99–12/31/99
Singapore: Color Picture Tubes, A–559–601—1/1/99–12/31/99
South Africa: Brazing Copper Wire and Rod, A–791–502—1/1/99–12/31/99
Spain: Potassium Permanganate, A–469–007—1/1/99–12/31/99
Taiwan: Stainless Steel Cooking Ware, A–583–603—1/1/99–12/31/99
The People's Republic of China: Potassium Permanganate, A–570–001—1/1/99–12/31/99
The Republic of Korea: Brass Sheet and Strip, A–580–603—1/1/99–12/31/99

Antidumping Duty Proceedings and Period

The Republic of Korea: Color Picture Tubes, A–580–605—1/1/99–12/31/99
The Republic of Korea: Stainless Steel Cooking Ware, A–580–601—1/1/99–12/31/99

Countervailing Duty Proceedings and Period

Brazil: Brass Sheet and Strip, C–351–604—1/1/99–12/31/99
Spain: Stainless Steel Wire Rod, C–469–004—1/1/99–12/31/99
Taiwan: Stainless Steel Cooling Ware, C–583–604—1/1/99–12/31/99
The Republic of Korea: Stainless Steel Cooking Ware, C–580–602—1/1/99–12/31/99

Suspension Agreements and Period

Canada: Potassium Chloride, A–122–701—1/1/99–12/31/99
Japan: Sodium Azide, A–588–839—1/1/99–12/31/99

In accordance with section 351.213 of the regulations, an interested party as defined by section 771(9) of the Act may request in writing that the Secretary conduct an administrative review. The Department changed its requirements for requesting reviews for countervailing duty orders. Pursuant to 771(9) of the Act, an interested party must specify the individual producers or exporters covered by the order or suspension agreement for which they are requesting a review (Department of Commerce Regulations, 62 FR 27295, 27424 (May 19, 1997)). Therefore, for both antidumping and countervailing duty reviews, the interested party must specify for which individual producers or exporters covered by an antidumping finding or an antidumping or countervailing duty order it is requesting a review, and the requesting party must state why it desires the Secretary to review those particular producers or exporters. If the interested party intends for the Secretary to review sales of merchandise by an exporter (or a producer if that producer also exports merchandise from other suppliers) which were produced in more than one country of origin and each country of origin is subject to a separate order, then the interested party must state specifically, on an order-by-order basis, which exporter(s) the request is intended to cover.

Seven copies of the request should be submitted to the Assistant Secretary for Import Administration, International Trade Administration, Room 1870, U.S. Department of Commerce, 14th Street and Constitution Avenue, NW, Washington, DC 20230. The Department also asks parties to serve a copy of their requests to the Office of Antidumping/Countervailing Enforcement, Attention: Sheila Forbes, in room 3065 of the main Commerce Building. Further, in accordance with section 351.303(f)(1)(i) of the regulations, a copy of each request must be served on every party on the Department's service list.

The Department will publish in the **Federal Register** a notice of ''Initiation of Administrative Review of Antidumping or Countervailing Duty Order, Finding, or Suspended Investigation'' for requests received by the last day of January 2000. If the Department does not receive, by the last day of January 2000, a request for review of entries covered by an order, finding, or suspended investigation listed in this notice and for the period identified above, the Department will instruct the Customs Service to assess antidumping or countervailing duties on those entries at a rate equal to the cash deposit of (or bond for) estimated antidumping or countervailing duties required on those entries at the time of entry, or withdrawal from warehouse, for consumption and to continue to collect the cash deposit previously ordered.

This notice is not required by statute but is published as a service to the international trading community.

Dated: January 7, 2000.

Holly A. Kuga,

Acting Deputy Assistant Secretary for Group II, AD/CVD Enforcement.

[FR Doc. 99–873 Filed 1–12–99; 8:45 am]

BILLING CODE 3510–DS–M

DEPARTMENT OF COMMERCE

International Trade Administration

[A–580–805]

Final Results of Changed Circumstances Antidumping Duty Administrative Review: Industrial Nitrocellulose From Korea

AGENCY: Import Administration, International Trade Administration, Department of Commerce.

SUMMARY: On October 26, 1999, the Department of Commerce (''the Department'') published the notice of initiation and preliminary results of its changed circumstances administrative review concerning whether Korea CNC Ltd. (''KCNC'') is the successor firm to Daesang Corporation (''Daesang'') under the order covering industrial nitrocellulose (''INC'') from Korea. We have now completed that review. We have determined that KCNC is the successor firm to Daesang.

EFFECTIVE DATE: January 13, 2000.

FOR FURTHER INFORMATION CONTACT: Ron Trentham or Thomas Futtner, Office of AD/CVD Enforcement, Import Administration, International Trade Administration, U.S. Department of Commerce, 14th Street and Constitution Avenue, NW, Washington, DC 20230; telephone (202) 482–6320 or (202) 482–3814, respectively.

SUPPLEMENTARY INFORMATION:

The Applicable Statute and Regulations

Unless otherwise indicated, all citations to the statute are references to the provisions effective January 1, 1995, the effective date of the amendments made to the Tariff Act of 1930 (''the Act'') by the Uruguay Round Agreement Act. In addition, unless otherwise indicated, all citations to the Department's regulations are to the regulations codified at 19 CFR part 351 (1999).

Background

In a letter dated August 25, 1999, KCNC advised the Department that on April 1, 1999, China Nitrocellulose Co. (''CNC'') purchased Daesang's INC business, including Daesang's only manufacturing and research and development (''R&D'') facility for subject merchandise (''the Chonju factory'').

KCNC stated that CNC transferred Daesang's INC business to KCNC, which CNC had newly established for that purpose. KCNC requested that the Department conduct a changed circumstances administrative review pursuant to section 751(b) of the Act to determine whether KCNC should properly be considered the successor firm to Daesang. KCNC stated that it operates the Chonju factory without change. Production continues with the same equipment, the same workers, the same raw materials purchased from the same suppliers, and the same production process. KCNC stated that it continues to sell the same products to the same customers to which Daesang previously sold. Further, the organizational and management structure of Daesang's INC business has essentially remained intact, except that KCNC has appointed a new president. All management and employees at the plant manager level and below are the same as when the factory was managed by Daesang, while the managing director was formerly employed by Daesang in another capacity. In addition, KCNC provided a copy of the Closing of the Asset Purchase and Sale Agreement. KCNC also submitted a copy of the relevant schedules to the sales agreement between Daesang and CNC, showing the transfer to KCNC of Daesang's INC assets, contracts, customers, and suppliers.

On October 26, 1999, the Department published in the **Federal Register** (63 FR 57628) the notice of initiation and preliminary results of its changed circumstances antidumping duty administrative review of INC from Korea. We have now completed this changed circumstances review in accordance with section 751(b) of the Act.

On November 26, 1999, KCNC submitted comments with regard to the Department's October 26, 1999, preliminary results. KCNC stated that it believes that the Department's preliminary results are correct in all respects. No comments were filed by the petitioner or any other interested party.

Scope of the Review

Imports covered by this review are shipments of INC from Korea. INC is a dry, white amorphous synthetic chemical with a nitrogen content between 10.8 and 12.2 percent, and is produced from the reaction of cellulose with nitric acid. INC is used as a film-former in coatings, lacquers, furniture finishes, and printing inks. The scope of this order does not include explosive grade nitrocellulose, which has a nitrogen content of greater than 12.2 percent.

INC is currently classified under Harmonized Tariff System (''HTS'') subheading 3912.20.00. While the HTS item number is provided for convenience and Customs purposes, the written description remains dispositive as to the scope of the product coverage.

Successorship

In considering questions involving successorship, the Department examines several factors including, but not limited to, changes in (1) management, (2) production facilities, (3) supplier relationships, and (4) customer base. *See, e.g.*, Brass Sheet and Strip from Canada; Final Results of Antidumping Duty Administrative Review, 57 FR 20460 (1992). While no one or several of these factors will necessarily provide a dispositive indication, the Department will generally consider the new company to be the successor to the previous company if its resulting operation is essentially the same as its predecessor. *See, e.g., Industrial Phosphoric Acid from Israel; Final Results of Changed Circumstances Review,* 59 FR 6944 (February 14, 1994). Thus, if evidence demonstrates that, with respect to the production and sale of the subject merchandise, the new company operates as the same entity as the former company, the Department will treat the successor company the same as the predecessor for antidumping purposes, *e.g.*, assign the same cash deposit rate or, if appropriate, apply any relevant revocation.

We have examined the information provided by KCNC in its August 25, 1999, letter and determined that KCNC is the successor-in-interest to Daesang. The management and organizational structure of the former Daesang have essentially remained intact under KCNC, and there have been no changes in the production facilities, supplier relationships, or customer base. Therefore, we determine that KCNC has maintained essentially the same management, production facilities, supplier relationships, and customer bases as did Daesang.

Final Results of Changed Circumstances Review

We determine that KCNC is the successor-in-interest to Daesang for antidumping duty cash deposit purposes. KCNC, therefore, will be assigned Daesang's antidumping duty cash deposit rate of 2.10 percent. This deposit requirement will be effective upon publication of this notice of final results of administrative review for all shipments of the subject merchandise entered, or withdrawn from warehouse, for consumption on or after the publication date as provided by section 751(a)(2)(c) of the Act. This deposit rate shall remain in effect until publication of the final results of the next administrative review.

This changed circumstances review and notice are in accordance with section 751(b) of the Act, as amended (19 U.S.C. 1675(b)), and 19 CFR 351.216.

Dated: January 7, 2000.

Robert S. LaRussa,

Assistant Secretary, Import Administration.

[FR Doc. 00–874 Filed 1–12–00; 8:45 am]

BILLING CODE 3510–DS–P

DEPARTMENT OF COMMERCE

International Trade Administration

[A–583–816]

Certain Stainless Steel Butt-Weld Pipe Fittings From Taiwan; Final Results of Administrative Review

AGENCY: Import Administration, International Trade Administration, Department of Commerce.

ACTION: Notice of Final Results of Administrative Review.

SUMMARY: On May 15, 1997, the Department of Commerce (the Department) published in the **Federal Register** the preliminary results of the 1992–1994 administrative review of the antidumping duty order on certain stainless steel butt-weld pipe fittings (pipe fittings) from Taiwan (A–583–816). This review covers one manufacturer/exporter of the subject merchandise during the period December 23, 1992 through May 31, 1994.

We gave interested parties an opportunity to comment on the preliminary results. Based upon our analysis of the comments received we have not changed the results from those presented in our preliminary results of review.

EFFECTIVE DATE: January 13, 2000.

FOR FURTHER INFORMATION CONTACT: Robert James at (202) 482–5222, Antidumping and Countervailing Duty Enforcement Group III, Import Administration, International Trade Administration, U.S. Department of Commerce, 14th Street and Constitution Avenue NW, Washington, DC 20230.

APPLICABLE STATUTE AND REGULATIONS: Unless otherwise indicated, all citations to the Tariff Act of 1930, as amended (the Tariff Act) and to the Department's regulations are in reference to the

provisions as they existed on December 31, 1994.

SUPPLEMENTARY INFORMATION:

Background

On June 16, 1993, the Department published in the **Federal Register** the antidumping duty order on pipe fittings from Taiwan (58 FR 33250). On June 7, 1994, the Department published the notice of ''Opportunity to Request Administrative Review'' for the period December 23, 1992 through May 31, 1994 (59 FR 29411). In accordance with 19 CFR 353.22(a)(1), respondent Ta Chen Stainless Pipe Co., Ltd. (Ta Chen) requested that we conduct a review of its sales for this period. On July 15, 1994, we published in the **Federal Register** a notice of initiation of an antidumping duty administrative review covering the period December 23, 1992 through May 31, 1994.

We published the preliminary results of this review in the **Federal Register** on May 15, 1997 (Certain Stainless Steel Butt-Weld Pipe Fittings From Taiwan; Notice of Preliminary Results of Administrative Review, 62 FR 26773 (Preliminary Results)). Ta Chen filed a case brief on September 3, 1997; petitioner, the Flowline Division of Markovitz Enterprises Inc., submitted its rebuttal brief on September 11, 1997. The Department held a hearing on October 21, 1997.

The Department has now completed this review in accordance with section 751 of the Tariff Act.

Scope of the Review

The products subject to this antidumping duty order are certain stainless steel butt-weld pipe fittings, whether finished or unfinished, under 14 inches inside diameter.

Certain stainless steel butt-weld pipe fittings (pipe fittings) are used to connect pipe sections in piping systems where conditions require welded connections. The subject merchandise is used where one or more of the following conditions is a factor: (1) Corrosion of the piping system will occur if material other than stainless steel is used; (2) Contamination of the material in the system by the system itself must be prevented; (3) High temperatures are present; (4) Extreme low temperatures are present; (5) High pressures are contained within the system.

Pipe fittings come in a variety of shapes, with the following five shapes the most basic: ''elbows,'' ''tees,'' ''reducers,'' ''stub ends,'' and ''caps.'' The edges of finished pipe fittings are beveled. Threaded, grooved, and bolted fittings are excluded from this antidumping duty order. The pipe fittings subject to this order are classifiable under subheading 7307.23.00 of the Harmonized Tariff Schedule of the United States (HTS).

Although the HTS subheading is provided for convenience and Customs purposes, our written description of the scope of this order remains dispositive.

The period for this review is December 23, 1992 through May 31, 1994. This review covers one manufacturer/exporter, Ta Chen, and its wholly-owned U.S. subsidiary, Ta Chen International (TCI) (collectively, Ta Chen).

Analysis of Comments Received

Due to the number of individual and company names and the importance of the timing of events in this review, that history is summarized briefly here. Furthermore, Ta Chen filed a single case brief covering this review as well as the 1992–1993 and 1993–1994 administrative reviews of certain welded stainless steel pipe (stainless pipe) from Taiwan. Therefore, a coherent response to Ta Chen's arguments in the instant review necessarily entails references to actions taken by petitioners in the stainless pipe case. The comments that follow concern our application of adverse best information available (BIA) as the basis for Ta Chen's margins in the preliminary results of this review. Our decision to resort to BIA resulted from Ta Chen's dealings with two US customers, referred to in the Preliminary Results as ''Company A'' and ''Company B'' to protect their identities. Ta Chen has since entered the names of these customers into the public record of this review and we here identify them by name: Company A is San Shing Hardware Works, USA (San Shing), and Company B is Sun Stainless, Inc. (Sun). San Shing and Sun were both established by current or former managers and officers of Ta Chen, were staffed entirely by current or former Ta Chen employees, and distributed only Ta Chen products in the United States. According to Ta Chen, prior to June 1992 (the date of the preliminary determination in the less-than-fair-value (LTFV) investigation of stainless pipe) Ta Chen had sold pipe and pipe fittings from the US inventory of its wholly-owned subsidiary, TCI. In June 1992 TCI and San Shing (a US company established in 1988 by the president of a Taiwanese firm, San Shing Hardware Works, Ltd.) allegedly signed an agreement whereby San Shing would purchase all of TCI's existing US inventory and would replace TCI as the principal distributor of Ta Chen pipe and pipe fittings in the United States. San Shing also committed itself to purchasing substantial dollar values of Ta Chen products from TCI over the next two years, and rented its business location from the president of Ta Chen and TCI, Robert Shieh. Ta Chen claims it took these measures to avoid the burden of reporting exporter's sales price (ESP) sales to the Department. Operating under a number of ''doing business as'' (dba) names including, *inter alia*, Sun Stainless, Inc., Anderson Alloys, and Wholesale Alloys, San Shing accounted for well over eighty percent of Ta Chen's US sales of pipe fittings during the 1992—1994 period of review.

According to Ta Chen, in September 1993 a member of Ta Chen's board of directors, Frank McLane, incorporated a new entity, also called Sun Stainless, Inc. This new Sun purchased all of San Shing's assets, including inventory, and assumed all of San Shing's obligations regarding its lease of space from Ta Chen's president, purchase commitments, credit arrangements, etc. One month later, in October 1993, Mr. McLane allegedly sold all of his Ta Chen stock, resigned as an officer of Ta Chen, and severed all ties with the firm, devoting his full energies from that time forward to the new Sun.

On July 18, 1994, petitioners in the companion case on stainless pipe first called the Department's attention to San Shing's existence, and named six of an eventual eight dba parties all claimed by Ta Chen as unrelated US customers. Ta Chen responded on July 28, 1994, claiming that San Shing, as a newcomer to the US stainless steel pipe fittings market, had adopted the names of prior Ta Chen customers as dba names. This submission failed to note the two additional dba names also used by San Shing, but not included in the stainless pipe petitioners' July 18 allegations. On August 3, 1994, sixteen days after petitioners in the stainless pipe case first called attention to its existence, the corporate charter of San Shing USA, Ta Chen's chosen replacement as the master distributor of its pipe and pipe fittings, was dissolved.

On September 19, 1994, Ta Chen filed its initial questionnaire response in the 1992–1994 review. San Shing, which accounted for over four-fifths of Ta Chen's US sales in this review, was not mentioned anywhere in this 303-page response.

The Department conducted a thorough verification of Ta Chen's home market submissions in the 1992–1993 review of stainless pipe in October 1994. Department officials then traveled to TCI's headquarters in Long Beach, California to verify Ta Chen's US sales

submissions in the pipe case. Aside from minor corrections, the resulting verification reports noted no major discrepancies and repeated Ta Chen's account of San Shing's and Sun's histories without further comment. See Ta Chen's February 7, 1997 submission, placing the relevant portions of the Department's November 6, 1996 verification reports on the record in this review.

On July 12, 1995, petitioners in the stainless pipe case renewed their allegations that Ta Chen, San Shing, and Sun were related parties, and appended reports by Dun & Bradstreet (D&B) and a foreign market researcher indicating that Sun Stainless had actually been founded by Frank McLane and W. Kendall (Ken) Mayes, TCI's sales manager, in May of 1992, not September 1993, as claimed by Ta Chen.[1] Ta Chen's rebuttal of August 2, 1995 included affidavits from Mr. Mayes and a Taiwanese employee of Ta Chen denying the July 12 allegations. See Letter of Ablondi, Foster, Sobin & Davidow, August 2, 1995 (Case A–583–815).

Over a year later, on November 12, 1996, Ta Chen filed a supplemental response[2] in the third (1994–1995) review of stainless pipe which disclosed for the first time that Ta Chen (i) Had authority to sign checks issued by San Shing, its dbas, and Frank McLane's Sun, (ii) Had physical custody of these parties' check-signing stamps, (iii) Controlled San Shing's and Sun's assets and had pledged these as collateral for a loan obtained on behalf of TCI, (iv) Enjoyed full-time and unfettered computer access to San Shing's and Sun's computerized accounting records, and (v) Shared sales and clerical personnel with San Shing and Sun. See Preliminary Results for a further description of these ties. The Department elicited further details concerning these connections in additional questionnaires; Ta Chen incorporated the relevant portions of its responses into the record of this review on February 7, 1997. Based on the totality of evidence before the Department, in the Preliminary Results we concluded that Ta Chen was related to San Shing and Sun within the meaning of section 771(13) of the Tariff Act. The Department also determined that Ta Chen had significantly impeded this review through its incomplete and inconsistent accounts of the events in the relevant period and that Ta Chen's behavior warranted application of first-tier, uncooperative BIA.

Comment 1: Related Party as Defined by Statute and Practice

Ta Chen insists that San Shing USA and Sun[3] were not related parties as defined by the Tariff Act in force at the time of all of Ta Chen's sales to these customers during the first period of review (POR). First, Ta Chen notes that under the 1994 statute, section 771(13) of the Tariff Act defines an ''exporter'' as including ''the person by whom or for whose account the merchandise is imported into the United States, if—

* * * * *

(B) Such person owns or controls, directly or indirectly, through stock ownership or control or otherwise, any interest in the business of the exporter, manufacturer, or producer;

(C) The exporter, manufacturer, or producer owns or controls, directly or indirectly, through stock ownership or control or otherwise, any interest in the business conducted by such person.

Ta Chen's September 3, 1997 Case Brief (Case Brief) at 7, quoting section 771(13) of the Tariff Act (Ta Chen's emphasis omitted).

Under this statutory framework, Ta Chen argues, the ''exporter'' can only include the parties ''by whom or for whose account the merchandise is imported.'' According to Ta Chen, because Ta Chen first sold the subject merchandise to its US subsidiary TCI, which took legal title to the pipe fittings, incurred all seller's risks of non-payment, acted as the importer of record for all these transactions, and ''entered the importation into its financial inventory,'' TCI, not San Shing or Sun, was ''the person by whom, or for whose account,'' the merchandise was imported. Case Brief at 9. Therefore, section 771(13) of the Tariff Act never reaches the issue of whether or not TCI subsequently resold the subject merchandise to a related party such as San Shing or Sun. Any such transactions, in Ta Chen's view, would be irrelevant under the statute, citing Certain Small Business Telephone Systems from the Republic of Korea, 54 FR 53141, 53151 (December 27, 1989) (Small Business Telephones). In that case, Ta Chen submits, the Department concluded that the respondent's related US customer was ''neither the importer nor the person for whose account the merchandise is imported;'' therefore, the sales transactions between the respondent's US subsidiary and the related US customer did not constitute ''related party'' transactions, as defined by the antidumping statute. *Id.* at 9, quoting Small Business Telephones. That the sales at issue in Small Business Telephones represented ESP transactions from the US affiliate's warehouse, as opposed to what Ta Chen characterizes as purchase price (PP) transactions ''facilitated'' by its US subsidiary TCI does not, Ta Chen argues, make any difference.

Further, Ta Chen maintains that the Department's preliminary determination that Ta Chen is related to San Shing and to Sun because it controlled these entities is contrary to the plain language of the statute. Section 771 of the Tariff Act, Ta Chen submits, only defines two parties as related if one party ''owns or controls, directly or indirectly, through stock ownership or control or otherwise, any interest in the business of the other.'' Case Brief at 11, quoting section 771 of the Tariff Act (Ta Chen's emphasis). This ''interest,'' Ta Chen insists, is defined both in case law and Departmental practice as involving equity ownership of at least five percent of the stock of the related party. Ta Chen avers that the Department's Preliminary Results in this review have read the phrase ''any interest'' out of the statute. According to Ta Chen, ''[i]t is an elementary principle of statutory construction that a portion of a statute should not be rendered a nullity.'' *Id.*, quoting *Asociacion Colombiana de Exportadores de Flores* v. *United States* (Asocoflores), 717 F. Supp. 847, 851 (CIT 1989). Ta Chen interprets the Department's Preliminary Results as stating essentially that because Ta Chen exercised ''control'' over San Shing and Sun, Ta Chen thereby controlled ''an interest in'' San Shing and Sun; such a reading, Ta Chen argues, renders the relevant statutory language meaningless and redundant. Case Brief at 12. Compounding the Department's error, Ta Chen continues, is that while recognizing the ''any interest'' requirement of section 771(13)(B) and (C) of the Tariff Act, the Department nonetheless failed to define ''any interest'' in its Preliminary Results. In Ta Chen's view, this failure to define ''any interest'' as applied in this review, especially in light of past practice defining ''any interest'' as entailing five percent or more equity ownership, places the burden upon the respondent to divine the meaning of the undefined. Further, this ''abdication'' by the Department effectively precludes judicial review, as the reviewing court

[1] With the permission of petitioners in the stainless pipe case, on February 24, 1997, the Department incorporated this Dun & Bradstreet report and an accompanying affidavit into the record of this review.

[2] Ta Chen submitted relevant portions of this response into the record of this review on December 13, 1996 and again on January 2, 1997.

[3] Although Ta Chen refers to San Shing and Sun Stainless, Inc. collectively as ''Sun,'' for clarity the Department has not done so.

would also be hobbled by this same failure to define the relevant terms.

Ta Chen suggests that, had Congress intended to include a control test in the definition of related parties under section 771, it would have done so. Instead, Ta Chen maintains, Congress chose to define two parties as related to one another not when one controlled the other but, rather, when one controlled ''any interest'' in the other. This distinction is critical, Ta Chen asserts, because Congress did include a simple control test at sections 773(d) and (e) of the Tariff Act (the ''Special Rules'' for, respectively, Certain Multinational Corporations and disregarding related-party transfer prices for major inputs in the calculation of constructed value). ''Where the Congress includes language in one provision of a statute, but not in another, it is assumed that the Congress did so for a purpose. * * * [T]he difference in statutory language must be recognized.'' Case Brief at 14, citing *Rusello* v. *United States*, 464 US 16, 23 (1983), and *United States* v. *Wong Kim Bo,* 472 F. 2d. 720, 722 (5th Cir. 1972). According to Ta Chen, Congress never intended that ''control any interest'' would be synonymous with ''control'' where, as here, neither entity owns or controls equity in the other. This reading, Ta Chen maintains, is supported by the legislative history underlying the relevant statutory provisions. Ta Chen, citing *Nacco Materials Handling Group* v. *United States*, Slip Op. 97–99 (CIT July 15, 1997) (*Nacco Materials*), notes that the Senate Report accompanying the Antidumping Act of 1921 (the 1921 Act), progenitor of the Tariff Act, defined ''exporter'' as including the importer when ''the latter is financially interested in the former, or vice versa, whether through agency, stock control, resort to organization of subsidiary corporation, or otherwise.'' Case Brief at 15, quoting from S. Rep. No. 67–16, at 13 (April 28, 1921). One party's being ''financially interested'' in another, Ta Chen submits, is different from that party ''controlling'' another. *Id.*

Ta Chen argues that the Preliminary Results not only ignore the plain statutory language but also conflict with the common dictionary meaning of the term ''interest'' as entailing equity ownership of a share, right, or title in a business or property. *Id.* at 16. The Department, Ta Chen avers, embraced this definition when it stated that its policy is to find parties related only where the ownership interest of one party in the other meets the five percent threshold. See, e.g., Final Determination of Sales at Less Than Fair Value; Certain Forged Steel Crankshafts From Japan (Crankshafts), 52 FR 36984 (October 2, 1987).

According to Ta Chen, that this interpretation (*i.e.*, the reference to at least five-percent equity ownership) survived two major revisions to the antidumping law underscores Congress's approval of that interpretation. Ta Chen notes that both the 1984 Trade Act and the Omnibus Trade and Competitiveness Act of 1988 left intact the statutory language of section 771(13) and its reliance on equity ownership. ''Congress's amendment or re-enactment of the statutory scheme without overruling or clarifying the [administering] agency's interpretation is considered as approval of the agency interpretation.'' Case Brief at 20, quoting *Casey* v. *C.I.R.,* 830 F. 2d 1092, 1095 (10th Cir. 1987).

Ta Chen further argues that the Department's interpretation of section 771(13) of the Tariff Act in the Preliminary Results could lead to absurd results, asserting that under this standard, ''any control, no matter how inconsequential, would make the parties related,'' including ''any clerical assistance, any forwarding of orders to a customer, any attempt to insure payment, any security interest, any informational exchanges, any movement of an employee from one company to another, *etc.*'' Case Brief at 18. And, having created one absurdity by reading ''any interest'' out of the statute, Ta Chen asserts, the Department creates another absurdity by altering the statutory definition of ''controls * * * any interest'' into ''controls a substantial interest.'' *Id.*, citing the Preliminary Results at 26778 (Ta Chen's emphasis). Ta Chen argues that this attempt to rescue the Preliminary Results from absurdities founders on the Department's long-established practice that a party's five percent equity interest in another makes them related for purposes of the statute; ''[five] percent is not a substantial or significant control interest.'' *Id.* at 19.

Ta Chen points to the amendments to the Tariff Act effected by the Uruguay Round Agreements Act (URAA) as further confirmation that control did not define related parties under the pre-URAA Tariff Act governing this administrative review. According to Ta Chen, the Statement of Administrative Action (SAA) accompanying the URAA supports Ta Chen's contention that the URAA fundamentally altered the prior definition of related parties by adding a control test as a means for finding parties affiliated. For example, the SAA states that ''including control in the definition of 'affiliated' will permit a more sophisticated analysis which better reflects the realities of the marketplace.'' Case Brief at 21 and 22 (quoting the SAA at 78). Further, Ta Chen argues, the Senate report notes that the URAA added the factor of control in determining whether two parties are affiliated. *Id.* That Congress felt compelled to amend the Tariff Act to include specifically the indicium of control, Ta Chen avers, demonstrates that such a test was lacking in the old law: ''when a legislative body amends statutory language, its intention is to change existing law.'' Ta Chen continues: ''Congress completely rewrote the statutory language of the affiliated parties provision * * * adding the control test.'' *Id.* at 24 and 25. If control had been a factor in the pre-URAA Tariff Act's definition of related parties, Ta Chen concludes, there would have been no need to change the statutory language within the context of the Uruguay Round negotiations.

The Department, Ta Chen argues, has similarly distinguished between the prior definition of ''related parties'' and the expanded definition of ''affiliated persons,'' which, Ta Chen asserts, introduced the concept of control. Ta Chen notes that the Department in its Notice of Proposed Rulemaking (Proposed Rule) (61 FR 7308 (February 27, 1996)) issued in the wake of the URAA's amendments, remarked upon the confusion of many parties over the definition of control, and noted that the statute and SAA failed to provide ''sufficient guidance as to when the Department will consider an affiliate to exist by virtue of 'control' * * *'' Case Brief at 28, quoting Proposed Rule. If the control test always existed in the law, Ta Chen asks, why is the Department only now beginning to define control? The answer, Ta Chen submits, is that the control test was added by the 1995 amendments of the URAA.

To buttress its contention that the URAA added a control test to the related-party equation, Ta Chen notes that non-equity control relationships have been common—and widely known—for years prior to enactment of the URAA; yet, Ta Chen asserts, neither Congress nor the Department felt an apparent need to address these non-equity relationships within the context of the antidumping law. Furthermore, generally-accepted accounting principles (GAAP) in the United States have long recognized, and distinguished between, relationships involving control and those involving equity interest. Ta Chen maintains that this bifurcation is evident in the Department's administration of antidumping administrative reviews; since enactment

of the URAA the Department's antidumping questionnaires, verification outlines, and published determinations are replete with discussions of control, whereas ''[s]uch discussion does not exist under the pre-[URAA Tariff] Act.'' The reason, Ta Chen avers, is ''not because the world changed * * * [r]ather, the reason is that the law changed.'' Case Brief at 31.

The Preliminary Results, Ta Chen continues, are contrary not only to the plain language of the statute and the common meaning of the term ''related,'' but also fly in the face of long-standing Department practice. Citing Crankshafts and Disposable Pocket Lighters from Thailand, 60 FR 14263, 14268 (March 16, 1995) (Pocket Lighters), Ta Chen contends that under the pre-URAA statute, the Department has determined that two parties cannot be considered related absent common stock ownership. According to Ta Chen, in Disposable Lighters the Department refused to find two parties related despite closely intertwined operations, joint manipulation of prices and production decisions, and long-standing business relationships, including past ownership of one party by the other. The decisive factor in this determination, Ta Chen suggests, was the absence of any common equity relationship between the two entities during the period under review. Ta Chen maintains that the Department has hewn to this interpretation in litigation, as well. For example, Ta Chen continues, in Nacco Materials the Department concluded that the respondent and its two related entities satisfied the ownership requirements of section 771(13)(C) of the Tariff Act through direct or indirect ownership by the respondent. See Nacco Materials, at 10 and 11. Ta Chen insists that in the instant review Ta Chen, San Shing, and Sun have not satisfied what Ta Chen views as a statutory requirement for finding parties related.

Ta Chen suggests that even cases cited by petitioners in the stainless pipe case to support their claim that parties can be related through control (see, *e.g.*, Certain Fresh Cut Flowers From Colombia, 61 FR 42833, 42861 (August 19, 1996) (Colombian Flowers), and Roller Chain, Other Than Bicycle Chain, From Japan, 57 FR 43697 (September 22, 1992)) indicate that the Department defined ''any interest'' solely in terms of equity ownership. Case Brief at 36 and 37. Ta Chen maintains that prior to the Preliminary Results the Department has never stated that control of a company is tantamount to controlling an interest in that party. Indeed, Ta Chen avers, such control is ''irrelevant to whether the statutory standard is met.'' *Id.* at 37. As an example, Ta Chen cites Fresh Cut Roses From Ecuador where, Ta Chen argues, the Department concluded that the petitioner's concerns over the possibility of price manipulation and control of production and sales were inapposite as there was no evidence that ''any of these statutory indicators'' of related parties had been found. See Fresh Cut Roses From Ecuador, 60 FR 7019, 7040 (February 6, 1995). According to Ta Chen, the Department likewise argued before the Court of International Trade (the Court) that the issue of control over prices ''is irrelevant to the initial determination of whether the parties are indeed related'' within the meaning of section 771(D) of the Tariff Act. Case Brief at 38, quoting *Torrington Co., Inc.* v. *United States,* Slip Op. 97–29 (CIT March 7, 1997). In that case, Ta Chen argues, the Court concluded that ''requiring Commerce to look beyond the financial relationships of the companies would obviate the need for a statute setting forth specific guidelines for determining whether parties are indeed related.'' *Id.* at 40, quoting Torrington at 19. And in *Zenith Radio Corp.* v. *United States* (Zenith), Ta Chen maintains, the Court affirmed the Department's position that such financial relationships ''go to the essence of those relationships which the law details in 19 U.S.C. Sec. 1766(13).'' *Id.,* quoting Zenith at 606 F. Supp 695, 699 (CIT 1985), *aff'd,* 783 F.2d 185 (Fed. Cir. 1986). Ta Chen points to Cellular Mobile Telephones From Japan, 54 FR 48011, 48016 (November 20, 1989) as another instance where the Department ruled that the presence of non-equity relationships embodied in a Japanese keiretsu was irrelevant to its related-party determination. Case Brief at 40.

Ta Chen draws further support for its interpretation of the statute from a ''separate line of cases'' involving the collapsing of related parties. While conceding that home market collapsing determinations are not coterminous with the Department's definition of exporter for the purpose of determining United States price, Ta Chen nonetheless asserts the Department has consistently reached the statutory definition that two parties are related before proceeding to the ''non-statutory question'' of whether or not to collapse the two entities for purposes of antidumping margin calculation. Case Brief at 45 and 46, citing Pocket Lighters, 60 FR 14263, 14276, Fresh Cut Roses From Ecuador, 60 FR 7019, 7040 (February 6, 1995), and Colombian Flowers, 61 FR 42833, 42853 (1996). Rather, Ta Chen avers, the Department's Preliminary Results ''put[ ] the cart before the horse'' by, as Ta Chen frames it, reaching the collapsing decision first, and then using that decision to determine whether Ta Chen is related to San Shing and Sun within the meaning of section 771(13)(B) and (C) of the Tariff Act. Case Brief at 47. Citing these ''parallel lines'' of precedent, Ta Chen argues that the Department has always found parties ''only related when one owns another and no other factors are considered relevant.'' *Id.* at 48 and 49.

Ta Chen next turns to the Department's conclusion in the Preliminary Results that Ta Chen and Sun were related pursuant to subsection 771(13)(B) of the Tariff Act by virtue of the common ownership interests allegedly held by Mr. Frank McLane, who at the time in question was still a board member of Ta Chen. Ta Chen notes that the Preliminary Results assert that Mr. McLane simultaneously held equity interest in Ta Chen and owned Sun outright, thus making Ta Chen and Sun related. This conclusion, Ta Chen argues, is both factually and legally flawed. As a threshold matter, Ta Chen asserts, subsection 771(13)(B) of the Tariff Act holds that the exporter includes the person ''by whom or for whose account'' the subject pipe is imported into the United States (*i.e.*, Mr. McLane's Sun), if such person owns or controls ''any interest in the business of the exporter, manufacturer or producer'' (*i.e.*, Ta Chen). In Ta Chen's view, the Department could at most conclude that Mr. McLane was related to Sun or that Mr. McLane was related to Ta Chen. The Department could not argue, Ta Chen maintains, that Sun was, therefore, related to Ta Chen. Case Brief at 97.

Ta Chen adduces additional support for its contention that Frank McLane did not simultaneously own interests in Sun and Ta Chen by citing to corporate tax returns for San Shing for the 1992 and 1993 tax years. According to Ta Chen, San Shing's return for the year ended October 31, 1993 does not list Mr. McLane as either an officer or an owner. Ta Chen also argues that separate D&B reports on Ta Chen International, submitted by the stainless pipe petitioners, do not list Sun as a related concern. Furthermore, Ta Chen claims, its audited financial statements do not list Sun as being related to Ta Chen or TCI, although they do list Mr. McLane's other business interests, such as McLane Leisure and McLane Manufacturing, as related parties. Case Brief at 105. Finally, Ta Chen concludes, the Department has stated in verification reports in other proceedings that Mr. McLane's involvement with Sun commenced after he left Ta Chen. *Id.,*

citing Ta Chen's July 18, 1994 submission.

Assuming that Ta Chen and Sun were related before November 1993, Ta Chen submits that it did not sell subject merchandise to Sun prior to that time. According to Ta Chen, until November Ta Chen sold to San Shing, doing business as Sun Stainless, Inc., not to Frank McLane's Sun Stainless, Inc. ''It would be pure conjecture,'' Ta Chen submits, for the Department to conclude that Ta Chen sold to Mr. McLane's Sun. Case Brief at 107.

Finally, assuming that the pre-URAA law permits consideration of control in finding parties related, Ta Chen argues that the application of such a test in the instant review is unlawful absent sufficient agency explanation. The Preliminary Results, Ta Chen insists, represent a departure from the Department's practice of defining related parties in terms of five percent equity ownership; the failure to note and explain this so-called departure renders this determination unlawful. Case Brief at 51, citing *USX Corp.* v. *United States,* 682 F. Supp. 60, 63 (CIT 1988). Furthermore, Ta Chen continues, the Preliminary Results represent an unfair retroactive application of what Ta Chen describes as a new control test under section 771(13) of the pre-URAA Tariff Act. Principles of fairness, Ta Chen submits, require the Department to reverse its preliminary finding that Ta Chen was related to San Shing and Sun, especially, Ta Chen argues, because (i) This is a case of first impression, (ii) The Preliminary Results represent an abrupt departure from past administrative practice with respect to related-party issues, (iii) Ta Chen relied upon its understanding of the law then in effect when it responded to the Department's requests for information on related parties, (iv) The Preliminary Results would impose an ''enormous'' burden upon Ta Chen (by raising its margins to the BIA rates presented in the Preliminary Results), and (v) There is, in Ta Chen's view, no statutory interest in applying this new test to this backlog review.

Petitioner dismisses Ta Chen's arguments as to the statutory definition of related parties, characterizing Ta Chen's lengthy case brief as ''a desperate, albeit feeble, attempt to distort and selectively package the facts.'' In petitioner's view the issues are, in fact, quite simple. First, petitioner avers, the information Ta Chen itself provided ''in a misleading, untimely, and unacceptable manner'' demonstrates amply that Ta Chen was related to San Shing and Sun. Petitioner's September 11, 1997 Rebuttal Brief (Rebuttal Brief) at 2. Second, petitioner accuses Ta Chen of intentionally mis-characterizing its true relationships with San Shing and Sun, and of failing to provide the Department with accurate and reliable U.S. sales data to serve as the basis for calculating Ta Chen's margin in this review.

According to petitioner, under the plain language of the statute the only possible conclusion the Department could reach is that Ta Chen and San Shing and Sun [4] are related. *Id.* at 3. Petitioner points out that section 771(13)(C) of the Tariff Act defines the ''exporter'' (*i.e.,* Ta Chen) as including any person (*i.e.*, San Shing and Sun) ''if the exporter manufacturer, or producer *owns or controls, directly or indirectly, through stock ownership or control or otherwise, any interest in the business conducted by such person.*'' Rebuttal Brief at 4 (original emphasis). Petitioner suggests that the control indicia listed by the Department in the Preliminary Results, such as pledging of security interests in the parties' assets, possession of their signature stamps, the dedicated interconnection of computers, the sharing of office and sales personnel, and Mr. Shieh's negotiation of prices with San Shing's and Sun's customers, indicate clearly that Ta Chen was related to San Shing and Sun. In fact, petitioner contends, any one of these indicia in isolation would be sufficient to find Ta Chen related to San Shing and Sun. ''Remarkably, in the case of Ta Chen, each one of these situations existed.'' Given the breadth and depth of these parties' interrelationships, petitioner insists, Ta Chen's claim that it is not related to San Shing and Sun ''can only be interpreted as a blatant attempt to mislead the Department and impede this antidumping review.'' Rebuttal Brief at 4.

Contrary to Ta Chen's assertions, petitioner continues, the Tariff Act clearly does not limit the Department's related-party determinations only to those cases presenting documented evidence of direct equity ownership. Petitioner avers that the statute authorizes the Department to look beyond equity ownership to consider ''any and all situations where the nature of the relationship between the two parties allows the possibility of price and cost manipulation.'' *Id.* Thus, petitioner asserts, the pre-URAA definition of related parties extended beyond a simple test for equity ownership and provided expressly for situations wherein one party controls, through means other than stock ownership, any interest in the business of the other party. Indeed, were the Department to ignore the ''obvious and persuasive evidence'' that Ta Chen was related to San Shing and to Sun, petitioner concludes, it would be guilty of ''failing to fulfill its role and obligations under the statute.'' *Id.* at 4 and 5.

Department's Position

Based upon our review of the evidence on the record in this review, we conclude that the Department cannot reasonably rely upon sales between Ta Chen and San Shing or Sun for the purpose of calculating Ta Chen's dumping margin for this review. We agree with petitioner that the record evidence is clear that Ta Chen was, in fact, related to San Shing and Sun, as defined in section 771(13) of the pre-URAA Tariff Act.

First, nothing in the statute or its legislative history proscribes the examination of non-equity relationships in making a related-party determination pursuant to section 771(13) of the pre-URAA Tariff Act. The plain language of the Tariff Act provides the Department with the statutory mandate to examine, where appropriate, whether parties are related by means of control in defining the exporter for purposes of determining U.S. price. Furthermore, the Department has recognized in its pre-URAA administrative determinations that certain factual situations require it to look to non-financial factors when making its related-party determinations, an interpretation of the statute which the Court has upheld.

We also reject Ta Chen's contention that the definition of ''interest'' in section 771(13) (B) and (C) is limited to common stock ownership; nothing in the statute itself or its accompanying legislative history so constrains the Department in its analysis of related parties. Rather, the principal reason stock ownership is so often cited as the basis for finding an exporter related to a U.S. importer is simply because equity ownership is the most common indicator of two parties' relationship found in commercial practice. In fact, common equity ownership has served as prima facie evidence that two parties are related for purposes of the Tariff Act. See, *e.g.,* Color Television Receivers, Except for Video Monitors, From Taiwan, 53 FR 49706, 49712 (December 9, 1988). That common equity ownership constitutes prima facie evidence of related-party status is not, however, tantamount to saying it is the only evidence of such a relationship. Put simply, the statute does not direct

[4] Out of caution, petitioner's Rebuttal Brief refers to San Shing and Sun as ''Company X.''

the Department to find parties unrelated in the absence of common stock ownership. Further, nothing in the statute, the legislative history, or the regulations defines ''interest'' as being limited solely to stock ownership, or fixes a bright-line figure for the requisite level of equity ownership at five percent or more.

Turning first to the statutory language, the statute's explicit reference to parties being related ''through stock ownership or control or otherwise'' demonstrates clearly that Congress anticipated that companies could be related for the purposes of defining the ''exporter'' through means other than through stock or equity ownership. Such a reading is consistent with Congressional intent, the legislative history, and the express purpose of section 771(13) of the Tariff Act, which is to determine the proper basis for United States price in calculating dumping margins. As Ta Chen notes, ''[i]t is an elementary principle of statutory construction that a portion of the statute should not be rendered a nullity.'' See Asocoflores. Ta Chen's reading of the statute, however, would render a nullity the explicit statutory references to parties being related ''through stock ownership or control or otherwise.'' Therefore, accepting the narrow reading of the statute posited by Ta Chen would be inconsistent with the plain language of the statute.

In addition, the Senate Report accompanying the 1921 Act clarifies that the Department is not limited solely to consideration of equity interests in making its related-party determinations, nor does it limit ''financial interests'' solely to common equity ownership. Congress specifically included non-equity relationships as possible bases for finding parties related; by noting that an interest can involve a financial interest or interest ''through agency, stock control, resort to organization of subsidiary corporation or otherwise,'' Congress clearly envisioned the possibility of non-equity relationships between an exporter and an importer such that the prices between them become unreliable for purposes of calculating antidumping margins. See S. Rep. No. 67–16, at 13 (1921). Clearly, then, Congress did not share the view of section 771(13) urged by Ta Chen that related parties were limited per se to those sharing common equity ownership. Rather, Congress's broader view, as expressed in the plain language of the statute, afforded the Department the discretion to examine non-financial relationships where, as here, the record evidence so demanded. Any other reading of the legislative history would place artificial restraints on the Department's analysis and would be inconsistent with commercial realities, which recognize a wide range of relationships which could affect pricing and production decisions between parties.

Turning to the Department's interpretation of the relevant statutory provisions, at one time the Department focused primarily upon equity interests in rendering its related-party determinations under section 771(13) of the Tariff Act. See, *e.g.,* Cellular Mobile Telephones and Subassemblies From Japan, 54 FR 48011, 48016 (November 20, 1989), and Small Business Telephones, 54 FR 53141, 53151 (Dec. 27, 1989). The Department concluded that an equity interest of five percent or more, standing alone, was sufficient evidence to demonstrate that the prices between the parties could be manipulated. See, *e.g.,* Final Determinations of Sales at Less Than Fair Value: Certain Hot-Rolled Carbon Steel Flat Products, Certain Cold-Rolled Carbon Steel Flat Products, and Certain Corrosion-Resistant Carbon Steel Flat Products From Japan, 58 FR 37154, 37157 (July 9, 1993). In certain situations, the Department decided that the facts on record did not justify examining factors of control beyond five percent equity ownership when determining if parties were related. See, *e.g.,* Pocket Lighters, 60 FR 14263 (March 16, 1995). In Zenith the Court upheld our decision not to broaden the related party inquiry beyond an examination of equity relationships. 606 F. Supp. 695, 699 and 700 (CIT 1985). The court stated that the Department is not required by the statute to look beyond financial relationships.[5]

However, the Department has recognized the possibility of parties being related through non-financial interests in factual situations where elements of control exist that raise the distinct possibility of price manipulation. Thus, the Department has not felt constrained to examine only financial relationships and, where appropriate, has ventured beyond a consideration of equity ownership in its interpretation of section 771(13) of the Tariff Act. See, *e.g.,* Portable Electric Typewriters From Japan: Final Results of Administrative Review, 48 FR 7768, 7770 (February 24, 1983) (considering factors indicating control, but ultimately rejecting the sufficiency of these factors to prove the parties were related in this case); Final Determination of Sales at Less Than Fair Value: Oil Country Tubular Goods From Argentina, 60 FR 33539, 33544 (June 28, 1995) (considering, in addition to equity factors, non-equity factors such as shared management and indirect control before concluding that the producer was not related to certain customers). For example, in Polyethylene Terephthalate Film From Korea, the Department ''confirmed that the three entities are related in terms of common stock ownership, shared directors, and common management control'' for purposes of determining U.S. price. See Final Determination of Sales at Less Than Fair Value: Polyethylene Terephthalate Film From Korea, 56 FR 16305, 16314 (April 22, 1991) (emphasis added). Similarly, in Roller Chain From Japan the Department, in finding that respondent Sugiyama was related to its customer, stated that it ''considers shared directorship to be evidence of a relationship between these two organizations.'' Roller Chain, Other Than Bicycle Chain, From Japan, 57 FR 43697, 43701 (Sept. 22, 1992). Again, the Department clearly examined factors of control, and not solely the level of equity ownership in defining related parties under the statute.

The Court has affirmed the Department's interpretation that a related-party determination may include an examination of non-financial factors. In *Sugiyama Chain Co.* v. *United States,* the Court expressly rejected the plaintiff's argument that section 771(13)(C) of the Tariff Act limited the Department to an examination of financial relationship when determining if parties are related under that provision of the statute. 852 F. Supp. 1103, 1112 (CIT 1994). Instead, the Court held that the Department ''may properly consider 'both financial and/or non-financial connections' when assessing whether parties are related within the meaning of [section 771(13)(c)].'' *Id.* (quoting *E.I. DuPont De Nemours & Co.* v. *United States,* 841 F. Supp. 1237, 1248 (CIT 1993) (DuPont). Similarly, the court in *DuPont* ruled that the Department's examination of both financial and non-financial factors was in accordance with its statutory mandate. See DuPont, 841 F. Supp. at 1248.

As the express statutory language indicates, the purpose of the pre-URAA definition of ''exporter'' provided at section 771(13) is to ''determine when an importer is 'connected' to the exporter so as to warrant the use of

[5] Ta Chen misreads the Court's decision in Zenith. There the Court found that while there was no statutory requirement that the Department examine ''relationships which do not find expression in financial terms,'' nowhere did the court assert that the Department was statutorily barred from an examination of non-financial relationships. Zenith, 606 F. Supp. at 700

'exporters sales price' as the basis for U.S. price.'' Statement of Administrative Action at 839. Under the statute the Department may not rely upon prices between an exporter and a related U.S. customer in calculating dumping margins because of the possibility that prices between these parties will be manipulated to mask dumping activities of the foreign respondent. As stated earlier, in order to effectuate this statutory mandate the Department has recognized that certain non-financial relationships between parties may give rise to the potential for price manipulation or control. See, *e.g.*, Polyethylene Terephthalate Film From Korea, 56 FR 16305, 16314 (April 22, 1991); Portable Electric Typewriters From Japan, 48 FR 7768, 7770 (February 24, 1983). The Court has held that this interpretation is reasonable and in accordance with the law.

Ta Chen's exclusive focus on equity ownership in its Case Brief ignores the express purpose of the related-party determination made pursuant to section 771(13). While the Department's inquiry may begin with an examination of equity ownership, nothing precludes examination of other factors, especially where, as here, we have record evidence of non-financial relationships demonstrating connections between the parties which raise the distinct possibility of price manipulation. Our examination of related parties in light of non-financial relationships in this review is consistent with the express purposes of this provision. In fact, Ta Chen insists in its case brief that its prices to San Shing and Sun were lower than prices to its other U.S. customers, mistakenly viewing this as evidence that the parties could not be related, and that the prices between them are reliable for margin calculations. On the contrary, by offering preferential pricing for goods sold to San Shing and Sun, Ta Chen not only has demonstrated that its relationship with San Shing and Sun raises the possibility of Ta Chen affecting pricing, but has admitted that this relationship has resulted in preferential pricing. We also find misplaced Ta Chen's emphasis on revisions to the Tariff Act effected by the URAA. Contrary to Ta Chen's argument, new section 771(33) does not represent a fundamental change in the statute's intent. Rather, the URAA's definition of affiliated persons merely ''shifted the focus to control rather than equity.'' See Memorandum to Jeffrey P. Bialos in Engineering Process Gas Turbo-Compressor Systems From Japan, December 4, 1996 at 2. While in the past the predominant focus was on control through equity ownership, the new Tariff Act highlights all means of control in addition to equity ownership. See Engineering Process Gas Turbo-Compressor Systems From Japan.

We also do not accept Ta Chen's definition of ''any interest'' as being limited to a minimum five percent equity ownership. The five-percent equity test is a mere starting point in the Department's inquiry, establishing *prima facie* evidence that two parties are related. The analysis urged by Ta Chen would ignore the clear evidence in the record of this review that Ta Chen controlled San Shing and Sun and, through these parties, could manipulate prices to U.S. customers. We conclude further that Ta Chen did, in fact, have a non-equity financial interest in San Shing and Sun. The totality of the facts in this case, including Ta Chen's control of San Shing's and then Sun's check signing stamps, the unfettered computer ties, the involvement of Mr. Shieh in negotiating the prices accepted by San Shing and Sun, the exclusive supplier relationships, the pledging of San Shing's and Sun's assets to TCI's benefit, the intermingling of personnel, the preferential pricing and credit terms (for more on each of these ties see our response to Comment 2, below), and the rise and disappearance at Ta Chen's behest of both San Shing and Sun as Ta Chen's sole distributors, all point to the inescapable conclusion that San Shing's and Sun's financial interests were indistinguishable from Ta Chen's.

In fact, given the depth and breadth of these non-equity financial ties, one would reasonably expect to find common equity ownership. Its absence is the only missing element in the panoply of indicia which demonstrate that Ta Chen ''owned or controlled, through stock ownership, or control, or otherwise,'' an interest in the business of San Shing and Sun. Notwithstanding this absence, the Department cannot be obliged to find that no relationship exists where parties have no equity interest between them. Such a limitation would invite parties to evade the antidumping law by simply avoiding any common stock ownership.

Finally, assuming, arguendo, that the statute and the Department's past practice bar a finding that Ta Chen was related to San Shing and Sun pursuant to section 771(13)(C) of the Tariff Act, the facts of this review lead us to conclude, nevertheless, that the prices between these parties were, at a minimum, subject to manipulation by Ta Chen. Ta Chen acknowledges that its prices to San Shing and Sun were lower than its prices to Ta Chen's other U.S. customers. This pattern of preferential pricing undermines the credibility of Ta Chen's assertions concerning its relationships with San Shing and Sun and renders prices between them unsuitable for margin calculation purposes, given our statutory mandate to calculate dumping margins based upon arm's-length prices to the United States.

Our interpretation of the related-party provisions for these final results is consistent with the plain language of the statute when applied to the facts of this case. Any other conclusion would render this portion of the Tariff Act a nullity and would result in absurdities, given the evidence of record demonstrating Ta Chen's control over these parties. Both San Shing and Sun were established by current or former managers and officers of Ta Chen, were staffed entirely by current or former Ta Chen employees, and distributed only Ta Chen products in the United States. Finally, we reject Ta Chen's suggestion that the Department has in this case applied some extra-statutory test based upon ''substantial'' interest. Our use of this adjective in the Preliminary Results was descriptive only, and in no way implies the use of any new basis for the examination of relationships based upon control.

Comment 2: Ta Chen's Control of San Shing and Sun

Assuming, arguendo, that the statute permits finding parties related based upon control, Ta Chen insists that it exercised no control over either San Shing or Sun. Ta Chen first contends that if it had held any interest in San Shing or Sun it would have ''received something'' from Chih Chou Chang's sale of San Shing to Frank McLane, and the subsequent sale of Mr. McLane's Sun Stainless, Inc. to a third party, Picol Enterprises.[6] Ta Chen claims that it received nothing from either transaction, which ''alone demonstrates that Ta Chen had no interest in either [San Shing or] Sun.'' Case Brief at 54.

Furthermore, Ta Chen argues, even the indicia of control cited by the Department in the Preliminary Results do not lead to a finding that Ta Chen exercised control over San Shing and Sun. For example, while Ta Chen concedes that it had physical custody of the check signature stamps used first by San Shing and later by Sun, Ta Chen claims that it could not unilaterally execute checks drawn against San Shing's or Sun's accounts. Nor, Ta Chen

[6] This firm is identified variously as ''Picol International'' and ''Picol Enterprises.'' The contract covering Frank McLane's sale of Sun lists the purchaser as ''Picol Enterprises.''

continues, could Ta Chen prevent either San Shing or Sun from writing checks without Ta Chen's approval and signature. This physical custody of the signature stamp was, Ta Chen insists, merely an avenue for monitoring disbursements by these companies. Ta Chen suggests that this was a prudent measure given both the large volume of merchandise involved, as well as the 210-day credit terms Ta Chen extended first to San Shing and then to Sun. In Ta Chen's view, under these conditions it was entirely reasonable to impose ''strong measures'' to permit ''stringent credit monitoring.'' Case Brief at 57.

In addition, Ta Chen admits that it had full access to San Shing's and Sun's computer systems. Because, Ta Chen claims, San Shing and Sun could write checks without using the signature stamps held by Ta Chen, this method of monitoring their disbursements ''was not perfect.'' *Id.* Hence, Ta Chen insisted upon additional computer monitoring of San Shing's and Sun's accounts receivable and payable. Ta Chen concludes by insisting that (i) It did not control disbursements of funds by San Shing and Sun, and (ii) Any such control over disbursements would be irrelevant where, as in the instant review, the only control at issue would be control over prices. Such stringent control, Ta Chen argues further, is an acceptable practice under the Uniform Commercial Code (UCC). According to Ta Chen, under Article 9 of the UCC, ''policing'' or ''dominion'' by a secured party (here, Ta Chen) over its unrelated debtors (referring to San Shing and Sun) ''is both permissible and expected.'' Case Brief at 59, citing § 9–205, Comment 5 of the UCC. In other contexts, Ta Chen argues, courts have found it unremarkable that one company would provide its financial and computer records to a second unrelated company.

Ta Chen also takes issue with the Preliminary Results' conclusion that Ta Chen shared sales department personnel with San Shing and Sun. According to Ta Chen, the record indicates that no individuals were simultaneously employed by Ta Chen and either San Shing or Sun. As to the activities of Ta Chen's former sales manager Ken Mayes, Ta Chen asserts that Mr. Mayes was an independent contractor, and not an employee of Ta Chen. Ta Chen maintains that Mr. Mayes only began working for San Shing (and later, Sun) after terminating the independent contractor relationship with Ta Chen. Furthermore, Ta Chen continues, it is not uncommon for individuals in the U.S. stainless steel market to move about among the limited number of players in the industry. While acknowledging that Ta Chen did provide some assistance to San Shing and Sun, Ta Chen insists that its employees remained on Ta Chen's payroll, acting on Ta Chen's behalf. Case Brief at 63. Even if Ta Chen shared employees with San Shing or Sun, Ta Chen avers, such commingling of personnel would not indicate that the parties are related. Even company officers, Ta Chen suggests, are merely corporate employees who do not necessarily have a share of, and therefore, an interest in, their employers. Ta Chen argues that the Department may not assume that because an individual is employed simultaneously by two firms, the two firms are related, or that the individual controls any interest in the firms. *Id.* at 64. Ta Chen also insists that a payment Ta Chen made to Mr. Mayes in 1995, or three years after he allegedly left Ta Chen's employ, does not indicate that Mr. Mayes was employed by Ta Chen in the intervening period (*i.e.*, when he worked for San Shing and Sun). Rather, Ta Chen claims, this payment stemmed from a previous agreement between Mr. Mayes and Mr. Robert Shieh, Ta Chen's and TCI's president and CEO, whereby in return for Mr. Mayes's expertise and assistance in Ta Chen's start-up in the United States, Ta Chen would pay a certain amount to Mr. Mayes should it reach a pre-determined level of profits in any future year. Ta Chen accuses the Department of establishing a ''per se rule'' that because money changed hands between Ta Chen and Ken Mayes, Mr. Mayes was an employee of Ta Chen, and further, Ta Chen and Mr. Mayes were, therefore, related parties. This one-time profit sharing payment, Ta Chen argues, conferred no ownership rights or control over prices to Mr. Mayes, and is thus irrelevant to a related-party determination. Further, Ta Chen insists, both Ta Chen and San Shing (or Sun) acted freely and in their own best interests throughout this period. *Id.* at 68 and 69.

The close business relationships which existed in the instant review, Ta Chen maintains, do not constitute grounds for finding Ta Chen related with San Shing or Sun. For instance, Ta Chen argues, in OCTG From Argentina the Department found close business ties between parties irrelevant, even in the face of a prior equity connection. Subsequent equity ties were likewise found irrelevant in Pocket Lighters, 60 FR 14263, 14267. According to Ta Chen, the parties at issue must be related through equity ownership at the time of the sales in question for the relationship to be legally relevant. Case Brief at 65. Furthermore, Ta Chen continues, the Department has previously examined cases wherein a respondent provided ''clerical type assistance'' [sic] to customers and found such assistance irrelevant to the issue of relatedness. See, *e.g.*, Polyethylene Terephthalate Film From Korea, 62 FR 10526, 10529 (1997). In Tapered Roller Bearings From Japan, 61 FR 57629 (November 7, 1996), Ta Chen maintains, even the provision of sales personnel, training, inventory management assistance, use of computer resources for inventory and ordering, accounting assistance, and marketing and customer service training were insufficient to find a U.S. subsidiary related to its customers. Ta Chen continues by noting that the Department's level-of-trade analysis performed under the post-URAA Tariff Act routinely includes examination of precisely these types of relationships, demonstrating, Ta Chen submits, that ''such services can be, and are, provided by sellers to their unrelated customers.'' Case Brief at 66.

Furthermore, Ta Chen argues, in past cases the Department has determined that parties are not related even in the face of much starker evidence of the parties' consanguinity. According to Ta Chen, in Certain Fresh Cut Flowers From Mexico, 56 FR 1794, 1799 (January 17, 1991) the parties shared the same address, telephone numbers, invoice forms, and the same individual signed all invoices. The Department not only found the parties unrelated, but ''did not indicate that these facts were even relevant to whether the parties were related.'' Case Brief at 67.

Ta Chen also insists that there was nothing untoward in Ta Chen's practice of meeting with the customers of San Shing and Sun, and forwarding orders from these customers to San Shing and Sun. On the contrary, Ta Chen maintains, ''it is a perfectly understandable business practice for a mill to act in this way and to meet with it own previous customers and assure them that its use of a new inventory-holding master distributor will not adversely affect service or the price competitiveness of its products.'' Case Brief at 70, n. 17. Ta Chen claims that its officials ''knew the prices'' Sun would charge for subject pipe fittings, and accepted customer orders on behalf of San Shing and Sun. As Ta Chen ''would not wish to undermine [San Shing and] Sun,'' Ta Chen claims, it forwarded these orders to San Shing or Sun, as appropriate, rather than simply filling the order and billing the customers directly. Case Brief at 71. According to Ta Chen's account, San Shing and Sun were free to accept or

reject any orders obtained by Ta Chen. Ta Chen likens this pattern of activity with a commission agent who secures an order on behalf of a given supplier, and then forwards that order to the supplier. In Ta Chen's estimation, such a transaction would not render the commissionaire related to the supplier.

Furthermore, Ta Chen asserts, such practices as described in this review are common between unrelated parties and ''thus, are not probative of Ta Chen and [San Shing and] Sun being related.'' Case Brief at 73. Citing statements by officials of a U.S. pipe company, a U.S. pipe and pipe fittings distributor, and a distributors' association, which Ta Chen submitted for the record, Ta Chen contends that mill officials would not fill orders directly from their distributors' customers, thus undercutting the distributors; rather, Ta Chen claims, the mill would forward the order to the distributor. Ta Chen challenges the credibility of one witness put forth by the stainless pipe petitioners, Mr. Brent Ward, who asserted in a sworn affidavit that such intimate involvement of a mill with its customers' subsequent sales of merchandise is unheard of among unrelated parties. Ta Chen wonders whether ''this lone domestic mill witness can really speak knowledgeably about the practices of offshore mills in assuring [the] ultimate customers about shipment and delivery with respect to subject merchandise (pipe and fittings).'' *Id.* at 74 (original emphases).

Ta Chen argues that even if it knew the prices at which San Shing and Sun would sell the subject merchandise they purchased from Ta Chen, such knowledge ''is of no moment.'' *Id.* Ta Chen cites the public testimony of Joe Avento before the International Trade Commission (the Commission) in an unrelated inquiry that the market for fungible products such as stainless pipe and pipe fittings is price-driven, and that these prices are ''generally well known by [ ] participants'' in the marketplace. *Id.* at 75. Ta Chen also cites to Tapered Roller Bearings From Japan, where a respondent provided its distributors with resale prices, as another case where the supplier had knowledge of its customers' prices. Again, Ta Chen avers, such knowledge would be insufficient grounds for finding two parties related for purposes of the Tariff Act.

Turning next to the liens held by Ta Chen on San Shing's and Sun's assets, which these parties supplied voluntarily, Ta Chen argues that such liens do not make parties related and are, in fact, common between unrelated parties. Ta Chen reiterates that it sold pipe fittings and other stainless steel pipe products to San Shing and Sun on extended credit terms. As an exercise in prudence, Ta Chen allows, it obtained a security interest in the inventory and accounts receivable of first San Shing, and then Sun. Furthermore, Ta Chen submits, its assignment of these security interests to a third party (*i.e.,* TCI's creditor bank) is irrelevant to a discussion of whether Ta Chen was related to San Shing and Sun. In fact, Ta Chen stresses, the UCC, at § 9–318, Comment 4, notes that security interests in ''intangibles'' such as accounts receivable ''can be freely assigned.'' Case Brief at 81, quoting UCC section 9–318, Comment 4.

Ta Chen states that in June 1993 TCI asked San Shing to grant a lien directly to TCI's bank. Ta Chen insists that this arrangement had the same result as TCI securing an interest in San Shing's inventory and accounts receivable and then assigning this interest to TCI's bank. Asking San Shing to grant the lien directly to TCI's bank was, Ta Chen avers, ''a way to simplify a still otherwise ordinary commercial arrangement,'' and imposed no additional burdens upon San Shing. *Id.* Ta Chen accuses the Department of creating another per se rule that providing UCC security interests as a condition for obtaining a loan makes two parties related. Rather, Ta Chen submits, failure to seek a lien on a borrower's assets would be a stronger indication that two parties are related, and that the creditor did not need to secure the debt. Ta Chen also claims that San Shing (and later, Sun) actually did receive consideration in return for granting these UCC liens, in the form of extended credit terms.

In addition, Ta Chen claims that since San Shing and Sun only distributed Ta Chen products, any liens on their inventory and accounts receivable were necessarily limited to the outstanding amounts owed to Ta Chen. That the liens covered all of San Shing's inventory and accounts receivable is, Ta Chen declares again, ''of no moment.'' Ta Chen notes that Article 9 of the UCC permits creditors to seek a ''blanket'' interest in both existing and ''after-acquired'' assets, rather than attempting to secure interests only in specific assets. Case Brief at 83. Nor is it unusual, Ta Chen continues, for a party pledging its assets as security to a creditor to pledge full cooperation in enforcing the lien in the event of default by the creditor. In the instant case, Ta Chen submits, as San Shing and Sun held the accounts receivable at issue, efforts to secure payment from San Shing's and Sun's customers would necessarily continue to rest with San Shing and Sun.

Ta Chen also sees nothing unusual in San Shing and Sun, putatively unrelated parties, entering into these security arrangements with no written documentation as to their terms. Ta Chen claims that, while it was ''unable to find any formal writing memorializing the agreement that [TCI's loan with its creditor bank] would always be less than the accounts payable of San Shing and McLane's Sun Stainless to TCI,'' such agreements were, Ta Chen contends, ''referenced in various correspondence during the relevant period between the parties * * *'' Case Brief at 85. Ta Chen implies that, just as terms of sales are not always committed to writing, there is nothing unusual in the absence of written documents concerning the debt financing arrangements between Ta Chen and San Shing, and between Ta Chen and Sun.

Even if the facts surrounding the debt financing arrangements between these parties were, in fact, unusual, Ta Chen avers, that would not provide a basis for finding Ta Chen related with San Shing or Sun. Ta Chen asserts that all parties acted freely and in their own best interests. Therefore, Ta Chen concludes, these security agreements do not indicate that Ta Chen controlled San Shing or Sun. Ta Chen points to the statements it submitted for the record from two individuals involved in the steel industry in the United States as support for its contention that security arrangements such as those described above are ''reasonable given a concern of nonpayment.'' Case Brief at 88. Ta Chen quotes one of these statements at length, noting with approval this individual's opinion that such measures can and do occur between suppliers and their unrelated distributor customers. Not only did Ta Chen's witnesses find these arrangements ''perfectly normal,'' but TCI's audited financial statements likewise did not include San Shing or Sun when listing loan guarantees provided by related parties. *Id.* at 89.

As two final notes with respect to the debt financing arrangements, Ta Chen states that no prior Departmental precedent exists for the proposition that secured debts or loan guarantees are sufficient grounds for finding parties related under the pre-URAA Tariff Act. Even under what Ta Chen interprets as a broader definition of ''affiliation'' under the post-URAA Tariff Act, to date the Department has yet to find that loans make parties affiliated. Case Brief at 90, citing to Certain Internal Combustion Industrial Forklift Trucks From Japan, 62 FR 5592, 5604 (February

6, 1997), and Large Newspaper Printing Presses From Japan, 61 FR 38139, 38157 (July 23, 1996). Second, Ta Chen criticizes the Preliminary Results for failing to explain precisely how the liens at issue in this review could affect control over prices which, Ta Chen reiterates, is the only aspect of control relevant to this review.

Ta Chen next discusses San Shing's and Sun's exclusive supplier relationships with Ta Chen. While conceding that, in fact, San Shing and Sun purchased and sold Ta Chen products exclusively, Ta Chen claims that San Shing and Sun were ''free to do business with others of [their] own choosing, as well as buy and sell others' products.'' Case Brief at 90. Ta Chen cites prior cases decided under the pre-URAA statute wherein the Department considered exclusive buy-sell relationships; in such cases, Ta Chen argues, the Department did not find such relationships indicative of the parties' being related. *Id.,* citing Portable Electric Typewriters From Japan, 48 FR 7768, 7770 (February 28, 1983), and Certain Residential Door Locks and Parts Thereof From Taiwan, 54 FR 53153 (December 27, 1989) (Door Locks From Taiwan). Even under post-URAA determinations, Ta Chen avers, the Department has not found exclusive buy-sell relationships sufficient to consider two or more parties affiliated. According to Ta Chen, the Department examined such relationships in Cold-Rolled and Corrosion Resistant Carbon Steel Flat Products From Korea, 62 FR 18404, 18441 (April 15, 1997) and Open-End Spun Rayon Singles Yarn From Austria, 62 FR 14399, 14401 (March 26, 1997), and concluded that because the parties were free to transact with others, their exclusive buy-sell arrangements did not render the parties affiliated. Case Brief at 91 and 92. On a broader plane, Ta Chen continues, San Shing and Sun could not be considered ''reliant'' upon Ta Chen because each had interests beyond their dealings with Ta Chen. San Shing, Ta Chen notes, sold fasteners, while Mr. McLane had interests involving lawnmower parts and plastic patio furniture. Ken Mayes, Ta Chen asserts, had an additional business interest in another pipe distributor, Stainless Specialties, Inc.

As further evidence that San Shing and Sun were not related to Ta Chen, the company states that its ''net, ex-factory price to [San Shing and] Sun was *less* than its net, ex-factory price to other U.S. customers.'' Case Brief at 95 (original emphasis). These pricing patterns, Ta Chen asserts, demonstrate that Ta Chen ''did not have control over'' San Shing and Sun. *Id.* Ta Chen allows that, had it exercised control over these distributors, it would have charged them higher prices, so as to mask any dumping of subject pipe fittings sold to genuinely unrelated customers. That Ta Chen's prices to San Shing and Sun were lower than its prices to other customers ''further confirm[s]'' that Ta Chen is not related to San Shing or to Sun.

Ta Chen also assails the credibility of the D&B report cited in the *Preliminary Results* as evidence that Ta Chen and Sun were related through Frank McLane's common equity ownership. According to Ta Chen, the conclusion in the D&B report that Frank McLane and Ken Mayes had been active with Sun since 1992 (indicating that Mr. McLane simultaneously held equity in Ta Chen and owned Sun outright) is based upon hearsay: ''[o]ne D&B clerk apparently heard something from somebody. A second D&B clerk speculates from what the first D&B clerk said.'' Case Brief at 100. According to Ta Chen, its certification that Mr. McLane ''had no involvement with any Sun before the one he incorporated in September 1993'' should be sufficient to refute the D&B report. *Id.* Requiring Ta Chen to go beyond the certified questionnaire responses ''unlawfully places the burden on Ta Chen to rebut the D&B report.'' *Id.* at 108. Ta Chen also claims that the Department should disregard the D&B report because petitioners in the stainless pipe case failed to submit the September 1994 D&B report to the Department prior to the October 1994 verification in the first review of WSSP.

Assuming that the D&B report constitutes evidence, Ta Chen asserts that it is not substantial evidence and, therefore, any reliance upon it is unlawful. Citing *Timken Co.* v. *United States,* 894 F. 2d 385, 388 (Fed. Cir. 1990), Ta Chen argues that ''substantial evidence is ''such relevant evidence as a reasonable mind might accept as adequate to support a conclusion.' '' Case Brief at 101. Ta Chen notes that Dun & Bradstreet issues a stock disclaimer with its reports that it does not guarantee their accuracy. Further, Ta Chen charges, the accuracy of this particular report is further impeached by the apparent removal of the unique D&B number identifying the subject of the report. Ta Chen asserts that this is not a minor matter since *two* Suns are at issue in this case—San Shing's dba Sun Stainless, Inc., and Frank McLane's Sun Stainless, Inc. Ta Chen also hints that other alterations may have been made to the D&B report.

In addition, Ta Chen maintains that the D&B report does not specifically cite Mr. Mayes as the source for the claim that Messrs. McLane and Mayes had been active in Sun Stainless since 1992. Since the D&B report does not indicate that Mr. McLane was president or owner of Sun prior to November 1993, the clear and unequivocal evidence indicates that Mr. McLane only became involved with Sun at the later date. In fact, Ta Chen submits, the contract of sale between Mr. McLane and Picol International, dated July 1995, states that Mr. McLane was president of Sun since November 5, 1993.

In closing on this point, Ta Chen alleges that the Department treated it unfairly by not accepting into the record submissions by Ta Chen addressing the credibility of the D&B report. Ta Chen asserts that it first received notice of the possible ''breadth of section 771(13)(B),'' and the importance of the D&B report, upon publication of the Department's *Preliminary Results.* Case Brief at 109. Ta Chen maintains that its July 2, 1997 submission on this point (rejected by the Department as untimely new factual information) should have been accepted for the record.

Suggesting that Ta Chen's version of events is ''embarrassingly lacking in any degree of common sense or logic,'' petitioner contends that ''[b]y any reasonable standard, Ta Chen exerted control over [San Shing and Sun]—as evidenced by its own belated admissions to the record of this review.'' Rebuttal Brief at 2 and 4. Petitioner contends that Ta Chen's continued denial of any control over San Shing and Sun is ludicrous, and stresses that Ta Chen failed to demonstrate that the types of relationships it enjoyed with San Shing and Sun are in any manner common between parties dealing at arm's length. *Id.* at 5. Ta Chen, petitioner avers, is the only foreign or domestic supplier of pipe fittings to whom San Shing and Sun pledged their assets. Ta Chen is the only supplier to have dedicated, interconnected telecommunications and computer systems with San Shing and Sun. Ta Chen is the only supplier with whom San Shing and Sun shared sales and clerical personnel. Ta Chen is the only supplier to whom San Shing and Sun surrendered the signature stamps used to execute withdrawals from their checking accounts. Finally, Ta Chen is the only supplier whose president, Mr. Shieh, routinely accompanied San Shing's and Sun's personnel on sales calls, and discussed prices with San Shing's and Sun's customers. ''In fact,'' petitioner concludes, ''the 'common sense' standard, in addition to any legal standard, permits only one conclusion,'' *i.e.,* that Ta Chen and San Shing and Sun were related and operating under

common control. Rebuttal Brief at 5. Petitioner accuses Ta Chen of establishing San Shing and then Sun for ''purposes specifically related to this and other antidumping investigations and reviews.'' *Id.* at 6.

Petitioner dismisses as ''laughable'' Ta Chen's use of statements by various individuals to support its contentions that the types of relationships between Ta Chen and San Shing and Sun are ordinary and commonplace practices for parties dealing at arm's length. If, in fact, the statements of any of these witnesses reflected common practices in the stainless steel pipe fitting markets, petitioner suggests, they would have supplied actual examples of other cases where unrelated parties: (i) Shared signature stamps, computer facilities, and sales department personnel, (ii) Participated in joint sales negotiations, and (iii) Pledged their assets to secure one another's debts. ''Neither Ta Chen nor its so-called experts have or ever will provide such examples because no *such examples exist.*'' Rebuttal Brief at 7 (original emphasis). And the reason no such examples exist, petitioner concludes, is that such practices are not at all characteristic of dealings between truly unrelated parties dealing at arm's length but, rather, provide indisputable evidence that Ta Chen and San Shing and Sun were related and operating under joint control.

Department's Position

We agree with petitioner that the factual evidence of record demonstrates a level of operational control exercised by Ta Chen over both San Shing and Sun that more than satisfies the statutory provisions for finding Ta Chen, San Shing, and Sun related parties.

Ta Chen in its case brief focuses upon each indicium of control cited in the *Preliminary Results* in isolation, characterizing each of these connections as (i) Commonplace and unremarkable in the commercial world, (ii) Insufficient to demonstrate Ta Chen's control of these parties, and, (iii) Irrelevant to a finding that these parties are related for purposes of the Tariff Act. However, we have examined the totality of the evidence in this case as it pertains to Ta Chen's overarching control over not only the activities of San Shing and Sun, but over their existence as well.

In placing such emphasis on a so-called five-percent equity test, Ta Chen ignores the true purpose of section 771(13) of the Tariff Act, which is to define the ''exporter'' for purposes of determining the correct basis for U.S. price. According to Ta Chen's repeated assertions, the only relevance of the present discussion is whether or not Ta Chen could control pricing decisions made by San Shing and Sun in selling subject merchandise in the United States. In fact, the evidence of record indicates this was so, as do Ta Chen's own admissions during the course of this review. As we have indicated, San Shing and Sun were both established by current or former managers and officers of Ta Chen, were staffed entirely by current or former Ta Chen employees, and distributed only Ta Chen pipe products in the United States. Throughout their involvement in these proceedings, Ta Chen had control of San Shing's and Sun's bank accounts, with authority to sign checks issued by San Shing, its dbas, and Frank McLane's Sun. Ta Chen also had physical custody of these parties' check-signing stamps. Ta Chen further controlled San Shing's and Sun's assets and these parties pledged their assets as collateral for a loan obtained on behalf of TCI. In addition, Ta Chen enjoyed full-time and unfettered computer access to San Shing's and Sun's computerized accounting records. Ta Chen's owner, Robert Shieh, owned the property housing San Shing and Sun, and Ta Chen shared sales and clerical personnel with the two companies. Finally, Robert Shieh actually negotiated the prices that San Shing and Sun would realize on their subsequent resales of subject merchandise to unrelated customers.

Furthermore, for the Department to conclude that Ta Chen did not exercise effective control over San Shing and Sun would require the Department to ignore numerous *lacunae* in Ta Chen's account. The inconsistencies, inaccuracies, partial admissions, and lack of documentation in Ta Chen's version of events in this administrative review do not support Ta Chen's claims.

First, as for Ta Chen's argument that had it held an interest in San Shing or Sun it would have received consideration for the sale of San Shing to Mr. McLane, and Mr. McLane's eventual sale of Sun Stainless, Inc. to a third party, this argument suffers from one fatal flaw. Ta Chen's claim that Mr. McLane purchased San Shing from Chih Chou Chang in the fall of 1993 is unsubstantiated. The transaction itself has never been documented for the record. In fact, aside from Ta Chen's claims on this matter, we have no evidence that any assets, or consideration therefor, actually changed hands in September 1993. Ta Chen's failure to document for the record this transaction is significant given Ta Chen's ability to enter into the record the most sensitive financial information concerning these parties, *e.g.,* the individual tax returns of Frank McLane and the corporate tax returns of the putatively unrelated parties, San Shing and Sun. More fundamentally, as we discuss above, record evidence indicates that Ta Chen misstated the commencement of Frank McLane's (and Ken Mayes's) involvement with the second ''Sun Stainless, Inc.,'' incorrectly indicating that Mr. McLane did not simultaneously act as president of Sun and as a director and shareholder of Ta Chen. Because the underlying chronology is itself impeached, we cannot accept at face value Ta Chen's claim that it did not receive compensation for these transactions, whether in the form of cash value or other non-monetary consideration.

Turning now to the indications of control enumerated in the *Preliminary Results*, we affirm our preliminary finding that Ta Chen controlled San Shing's and Sun's disbursements. One avenue Ta Chen used to exercise this control was through its possession of San Shing's and Sun's signature stamps. Ta Chen's assertion that it is commonplace for a business entity to surrender control over its disbursements to an unrelated party, as both San Shing and Sun did to Ta Chen, by turning over physical custody of their signature stamps to an unrelated supplier is not credible and is not supported by record evidence. Nor is there record support for Ta Chen's *ex post facto* claim that it could not execute checks unilaterally; having possession of both the checks and the signature stamp enabled Ta Chen to execute checks at will upon these entities' accounts. Furthermore, there is no support, either in the record of this review or in the Department's experience, for the notion that such a drastic step as demanding control over an unrelated customer's checking account would be required to effect ''stringent credit monitoring'' of the customer's expenditures, as Ta Chen claims here. In fact, control by one party over another party's checking account is usually only found between related parties.

Similarly, we find that Ta Chen's unlimited level of computer access to San Shing's and Sun's proprietary data supports a finding that Ta Chen exercised control over these parties. Ta Chen's assertions with respect to this invasive computer access are unpersuasive and are not supported by evidence in the record. Ta Chen attempts to present its full-time and unrestricted ability to scrutinize San Shing's and Sun's proprietary business records as prudent monitoring by a

creditor of its unrelated debtors which is ''permissible and expected'' under provisions of the UCC. We note that, while a creditor is entitled to periodic reports from a debtor concerning, *e.g.,* the debtor's sales and deliveries and the agings of accounts receivable used as collateral, nothing in the UCC envisions the unlimited access Ta Chen enjoyed here. *See* Nassberg, Richard T., *The Lender's Handbook*, American Law Institute, American Bar Association Committee on Continuing Professional Education, Philadelphia, 1986, at 32 and 33. Further, Ta Chen has offered no examples of any other firm allowing its unrelated supplier such extensive access to its payroll and accounting information. The reason Ta Chen did not give examples of such computer access is because, contrary to Ta Chen's claims, such a practice is not common and, to the Department's knowledge, does not exist between truly unrelated parties. As we noted in the final results of the 1994–1995 administrative review of stainless pipe, ''Ta Chen officials stated at the Department's [June 1997] verification at TCI that [Sun] maintained no security system or passwords with which to limit or terminate Ta Chen's access to its records; Ta Chen's access to [Sun's] accounting system was complete.'' *Certain Welded Stainless Steel Pipe From Taiwan*, 62 FR 37543, 37549 (July 14, 1997).[7]

With respect to the claimed need for the computer access and control over San Shing's and Sun's disbursements, this claim too is undermined by Ta Chen's own statements in the record. Ta Chen insists that it required these measures of control as a means of monitoring its customers in light of the substantial quantities of merchandise Ta Chen sold to San Shing and Sun, and in return for the 210-day credit terms offered by Ta Chen.[8] But as Ta Chen noted in its July 28, 1994 submission in the first administrative review of stainless pipe, San Shing was an established company enjoying ''substantial resources including lines of credit.'' Ta Chen's July 28, 1994 submission at 9. Furthermore, with respect to the balances owed by San Shing and Sun, as Ta Chen itself concedes, Ta Chen's ''risk [of non-payment] is not significant, since actual bad debt has not been a problem.'' Ta Chen's December 13, 1996 submission at 81. If San Shing enjoyed such substantial resources, and never presented a risk of non-payment, Ta Chen's stated need to implement such extraordinary monitoring measures to secure payment for its sales is without support. The absence of a genuine credit risk would, in fact, attenuate the need for this relationship. The second possible reason for these ties, posited by Ta Chen's witnesses, is that it allows for ''just-in-time'' delivery of inventory. While electronic ordering is a common and growing practice between suppliers and their distributors, this typically entails a sharply delimited level of access—most commonly, a one-way communication between the customer's purchasing department and the supplier's sales department. We are aware of no circumstances where electronic ordering would allow a supplier to have unrestricted access to the accounts payable, accounts receivable, inventory, and payroll data of an unrelated customer. We conclude that these untrammeled on-line computer ties existed because Ta Chen was controlling and directing San Shing and Sun.

We also conclude that the record indicates that Ta Chen shared personnel with San Shing and Sun. In fact, Ta Chen's December 13, 1996 submission details a long two-way history of shared office personnel between Ta Chen and San Shing dating to before San Shing ever purchased a single pipe fitting from Ta Chen. For example, Ta Chen claims that ''[f]rom the outset of [Ta Chen's and San Shing's] landlord-tenant relationship, TCI provided San Shing USA with assistance from its personnel and, from time to time, the use of TCI office equipment.'' Furthermore, San Shing ''provided necessary technical and other support to TCI personnel'' when TCI commenced its production of fasteners. See Ta Chen's December 13, 1996 submission at pages 51 through 54. In addition, Ta Chen's sales manager, Mr. Mayes, also acted as sales manager for San Shing and for Sun. For more on Mr. Mayes's role in these reviews, see our response to Comment 3, below. When considered together with the other indicia of control, this commingling of personnel lends additional support to the conclusion that Ta Chen was related to San Shing and Sun as defined in the Tariff Act.

With respect to Ta Chen's involvement in negotiating sales prices to San Shing's and Sun's customers—the true focus of this inquiry—Ta Chen insists that this involvement does not indicate control by Ta Chen of San Shing and Sun, and further asserts that such practices are commonplace. However, we agree with petitioner that Ta Chen's claim that negotiating the prices of its customers' subsequent sales is common between unrelated parties is unsupported either by record evidence or the Department's experience. San Shing and Sun Stainless were engaged in the distribution of a fungible, commodity product, i.e., ASTM A312 stainless steel pipe, and pipe fittings manufactured from this pipe. As Ta Chen's witness Mr. Joe Avento notes, the market for such products is price-driven. With little margin for profit, an unrelated distributor, as a matter of survival, would guard the prices it would accept for reselling the product in order, as the stainless pipe petitioners phrase it, to ''maximize whatever negotiating room [the customer] has with [its] supplier.'' See Rebuttal Brief of Collier, Shannon, Rill & Scott, September 10, 1997 at 15. Ta Chen has argued that the only element of control relevant to an antidumping proceeding is control over prices; Ta Chen's admitted role in setting prices for San Shing's and Sun's subsequent sales of pipe fittings to unrelated customers in the United States is evidence of precisely this type of control. For Ta Chen, as the supplying mill, to liken its role in these transactions to that of a mere commission agent, passing purchase orders between end-users and its distributors San Shing and Sun, is not credible. Ta Chen has noted that Ta Chen officials (specifically, Ta Chen's president, Mr. Robert Shieh) not only met with customers of San Shing and Sun, but that these same customers would contact Ta Chen directly, bypassing altogether their putative suppliers, San Shing and Sun. Ta Chen claims that ''Ta Chen officials would not wish to undermine [San Shing or] Sun,'' and that it merely forwarded any purchase orders it received to San Shing or Sun for their independent consideration and acceptance or rejection. See Ta Chen's Case Brief at 71. Here again, however, there is no record evidence, aside from Ta Chen's unsupported claims, that it ever forwarded a customer's order to San Shing or Sun, nor is there evidence of either San Shing or Sun ever rejecting a purchase order so obtained from TCI. Furthermore, Ta Chen's fastidious avoidance of ''undermining'' San Shing and Sun was unnecessary, given its control of the transactions from the mill in Tainan to the delivery to the ultimate end user in the United States.

[7] The original text identifies Sun as ''Company B.'' Although the verification concerned the 1994–1995 administrative review of WSSP, this narrative applied to prior periods as well, including the time covered by the instant review. *See* Memorandum to the File, *Certain Welded Stainless Steel Pipe from Taiwan*, June 19, 1997, at 5, a public version of which is on file in room B–099 of the main Commerce building.

[8] We note that, in addition to preferential pricing, these extended credit terms offered to San Shing and Sun would further indicate that their dealings were not at arm's length.

Turning to the debt security arrangements between San Shing, Sun Stainless, TCI, and TCI's creditor bank, Ta Chen claims that such arrangements are ''irrelevant.'' Ta Chen maintains that debt security arrangements by themselves have proven insufficient grounds for finding parties related for purposes of section 771(13) of the Tariff Act. Nevertheless, the nature of these particular security assignments, including the absence of any written agreement between these putatively unrelated parties, further supports our finding that transactions between these parties were not at arm's length. Within the larger context of Ta Chen's relationships with these entities, we find the debt security arrangements provide additional evidence of the degree of Ta Chen's control over all aspects of San Shing's and Sun's operations. Here, San Shing, and then Sun, unilaterally, and without consideration, assigned their entire inventory and accounts receivable directly to TCI's bank to facilitate a loan for TCI. That San Shing and Sun would accept such a risk without any consideration—without even a written agreement memorializing the terms and duration of the agreement—is not consistent with the dealings between truly unrelated companies. Nor has Ta Chen offered convincing evidence that this arrangement is, in fact, commonplace. Ta Chen fails to note that the UCC financing statements submitted for the record ''serve only to perfect the lender's rights against competing creditors and that rights so perfected must be created under a valid security agreement.'' The Lender's Handbook, op. cit. at 27. In spite of numerous submissions focusing upon the significance of these loan guarantees and their relevance to these proceedings, and in spite of our specific requests that Ta Chen do so, Ta Chen has never submitted evidence that a valid security agreement was ever created. Ta Chen has stated only that it ''asked'' first San Shing, and then Sun, to assign their inventory and receivables as security for a line of credit TCI obtained from a California bank, and that these parties agreed freely in return for extended credit terms. See Case Brief at 81 and 82. However, that these putatively unrelated parties would accede to such a request in the absence of any written security agreement as to the nature of the assignments, their scope, their duration, *etc.* does not comport with the actions of unrelated parties dealing at arm's length. Contrary to Ta Chen's assertion, in fact, the existence of these UCC filings absent any valid security agreement serves merely to underscore the dominion Ta Chen enjoyed over the actions and the assets of both San Shing and Sun.

Furthermore, Ta Chen has never documented for the record why the supposedly unrelated San Shing would be willing to offer its accounts receivable and inventory to secure a loan for TCI, or why Sun, supposedly unrelated to either Ta Chen or to San Shing, would assume these same obligations in toto when, as of the claimed date of its founding, it would have no outstanding balances whatever with Ta Chen. Two other aspects of these security agreements bear noting. First, that the secured amount available to TCI from its bank was always limited to the value of these receivables is an ipse dixit which Ta Chen, the sole party able to do so, has failed to document for the record. Ta Chen claims in its case brief that these agreements were ''referenced in various correspondence during the relevant periods between the parties,'' yet, curiously, Ta Chen elected not to submit any of this correspondence for the record. Our thorough review of Ta Chen's and TCI's correspondence files during the October 1994 verifications for the stainless pipe review also failed to reveal a single mention of these agreements. Second, Ta Chen insists that because San Shing and Sun only sold Ta Chen products, the value of any assets assigned by San Shing and Sun to TCI's bank necessarily equaled the amount owed by San Shing and Sun to TCI. See Case Brief at 82 and 83. However, this would be true only if San Shing and Sun sold this merchandise at the same price it originally paid to TCI. If San Shing and Sun marked up the price of the merchandise, which they would have to do to realize any profit from these transactions, then the secured amount necessarily exceeded the receivables San Shing and Sun owed to TCI. Furthermore, San Shing sold nuts and bolts for the automotive industry. Thus, its inventory and accounts receivable from the start of this relationship extended beyond the pipe and pipe fittings supplied by Ta Chen. Contrary to Ta Chen's assertions, the value of San Shing's inventory and accounts receivable clearly did exceed the amount San Shing owed to Ta Chen for its pipe products.

As for the exclusive supplier relationships between Ta Chen, San Shing and Sun, Ta Chen concedes that it was the exclusive supplier to both entities, but claims that each was free to do business with whomever it chose. However, Ta Chen has presented no evidence of San Shing or Sun ever seeking to purchase pipe fittings or pipe from any other firm. In fact, the record clearly indicates that except for the fasteners manufactured by San Shing Hardware Works, Ltd., San Shing dealt exclusively with Ta Chen merchandise; Sun Stainless was established for this purpose alone. Both were entirely reliant upon Ta Chen for their supplies of pipe and pipe fittings. We also find that Ta Chen's case cites in this regard are not on point. In Portable Electric Typewriters, for example, respondent Tokyo Juki sold merchandise exclusively to EuroImport, S.A., a subsidiary of Olivetti. Petitioner, citing a number of factors, including assumption of start-up costs, Olivetti's supplying typewriter parts to Tokyo Juki, and the fact that Tokyo Juki sold subject typewriters exclusively to EuroImport, alleged that Tokyo Juki and Olivetti were related parties. We concluded that ''Olivetti's and Tokyo Juki's relationship does not constitute control as contemplated by section 771(13) of the Tariff Act,'' and that petitioner's arguments with respect to EuroImport were ''not persuasive.'' Portable Electric Typewriters From Japan, 48 FR 7768, 7771.[9] While EuroImport had an exclusive distributor arrangement to distribute Tokyo Juki's typewriters, there is no indication that the obverse was true, *i.e.,* that Tokyo Juki was the sole supplier to EuroImport. In all likelihood, EuroImport also distributed typewriters manufactured by its parent, Olivetti, and may have distributed typewriters supplied by any number of manufacturers. Unlike the instant case, there is no evidence that EuroImport was dependent upon Tokyo Juki for its continued sales operations. Thus, Portable Electric Typewriters never reaches the issue of whether or not an exclusive supplier relationship is, or is not, evidence of parties' being related under section 771(13) of the Tariff Act by means of control. Furthermore, in sharp contrast to the instant case, the totality of evidence in Portable Electric Typewriters clearly indicated that Tokyo Juki could not control Olivetti or vice versa. Likewise, the cite to Residential Door Locks From Taiwan is inapposite. There we concluded that ''[t]here is no evidence on the record that Posse and Tong Lung operated closely together, were billed jointly, had their day-to-day operations directed by joint owners, or conducted transactions

[9] This discussion of ''control as contemplated by section 771(13) of the Tariff Act'' would be unnecessary if, as Ta Chen insists, the statute only defined related parties in terms of common equity ownership.

between themselves.'' Residential Door Locks From Taiwan, 54 FR 53153, 53161. We did not say, as Ta Chen asserts, that exclusive-supplier relationships could not be indicative of related-party status; on the contrary, we clearly examined the issue of exclusive supplier relationships within the context of a related-party determination and found that not only was there no exclusive supplier relationship between Posse and Tong Lung, there were no business transactions of any kind between the two.

Furthermore, Ta Chen has presented no evidence in support of its contention that these indicia of control, including computer access, control of disbursements, and intervention by a mill in its unrelated customers' sales are common. Despite the claims of Ta Chen's witnesses, Mr. Charles Reid, Mr. Theodore Cadieu of the USX Corporation, and officials from a U.S. pipe producer and an association of distributors that such practices happen ''all the time,'' none could cite a single specific example of similar ties between unrelated parties. The head of the distributors' association, who would be expected to have familiarity with the practices of its membership, failed to name a single member firm engaging in such ''common'' practices. See Ta Chen's February 7, 1997 submission at 54, and Ta Chen's April 1, 1997 submission. As a final note on the qualification of the stainless pipe petitioner's affiant, Mr. Brent Ward, to speak to ''the practices of offshore mills,'' Ta Chen has known at least since the Department's April 28, 1997 public hearing (in the 1994–1995 administrative review of stainless pipe) Mr. Ward's qualifications to address these matters. Mr. Ward is the president of the domestic pipe producer, Damascus-Bishop Tube Company, and also the Specialty Tubing Group, an association of North American producers of welded stainless steel pipe. His firm also purchases and distributes ornamental steel tubing produced by offshore mills. See Memorandum to the File, October 30, 1997, at 2, and Hearing Transcript (''Open Session''), In the Matter of Certain Welded Stainless Steel Pipe From Taiwan, May 12, 1997 at 15 through 21 and 34 through 37, on file in room B–099 of the main Commerce building. It is worth quoting Mr. Ward, acting in all three capacities, at some length:

> [a]t most, if it is necessary, a producing mill might have the opportunity to meet with both a distributor and that distributor's customer to discuss issues of material specification and/or quality requirements, but not to discuss issues of prices and quantities. . . . [I]n reality distributors in the welded stainless steel pipe industry in the United States that are truly unaffiliated with their supplying mills jealously guard both their corporate independence and their commercial ties with their customers and limit any contact by the mills with those customers as much as possible. The logic behind this approach at one level, of course, is simply that the distributors do not want to lose control of their businesses and do not want their customers to buy directly from the mills and eliminate the distributor's role in the chain of distribution.

See Affidavit of Mr. Brent Ward, submitted April 8, 1997, on file in room B–099 of the main Commerce Building.

We find Mr. Ward's common-sense description of the business ties typically found between unrelated parties to be credible, especially in light of Ta Chen's inability to cite any evidence to the contrary.

Finally, turning to Ta Chen's relationship with Sun through Mr. McLane's full ownership of Sun while holding a share of, and acting as a director for, Ta Chen, we find that substantial evidence of record in this review indicates that Mr. McLane's involvement with Sun predates the September 14, 1993 date claimed by Ta Chen. Rather, Mr. McLane, working with Mr. Mayes, established Sun and was actively engaging in sales of subject merchandise by 1992. The evidence of this is not, as Ta Chen characterizes it, hearsay. It is, in fact, the September 20, 1994 report of a disinterested and credible organization, Dun & Bradstreet, whose reports are routinely relied upon by the business and investment communities in assessing businesses' creditworthiness. Dun & Bradstreet's source, in turn, was Mr. Ken Mayes who, as the putative vice president and director of Sun, clearly had familiarity with the history and operations of this firm. In a May 27, 1994 interview with Dun & Bradstreet's analysts, Mr. Mayes stated that ''Sun Stainless, Inc.'' was started in 1992.[10] Mr. Mayes noted that Mr. McLane was the president and he the vice president of Sun. Furthermore, the D&B report includes a ''fiscal statement'' covering the period from November 1, 1992 to October 31, 1993. This document shows that for the year ended October 31, 1993, Sun had millions of dollars in sales, accounts payable, and accounts receivable.

If, as Ta Chen claims, Frank McLane's Sun Stainless, Inc. only became operational as of November 1, 1993, there should have been no financial activity whatever reported for the year prior to that date. Certainly, there would be no activity reported prior to September 1993 when Mr. McLane allegedly founded his new Sun Stainless, Inc. Perhaps recognizing this inconsistency, Ta Chen suggested in an August 2, 1995 letter originally submitted in the first review of stainless pipe:

> [t]he Dun & Bradstreets submitted by Petitioners on Frank McLane's Sun Stainless, Inc. obviously include the financial results of San Shing USA for the pre-October 31, 1993 period and the financial results of Frank McLane's Sun Stainless, Inc. for the period November 1, 1993 onward.

Ta Chen's February 7, 1997 submission at 73, n. 4 (original bracketing deleted).

Ta Chen went on to speculate that ''D&B's reporting in this fashion may be useful, as the profitability of San Shing USA's assets during the pre-October 31, 1993 period may be a useful indicator of the financial performance of Frank McLane's Sun Stainless, Inc. during the post-November 1, 1993 period.'' *Id.* It is not at all obvious, however, that the D&B report for a putatively new corporate entity, Sun Stainless, Inc., would include the financial results for a separate party, San Shing. Unless Mr. Mayes incorrectly presented San Shing's financial results as Sun's own, Dun & Bradstreet could not have confused the two. Indeed, since San Shing used the name ''Sun Stainless, Inc.'' as a fictitious dba name only, any search for financial information on ''Sun Stainless, Inc.'' (as distinct from San Shing Hardware Works, USA), would be unavailing because, according to Ta Chen, Sun never really existed before September 1993, other than as a name on San Shing's invoice forms. Furthermore, if Sun had truly started as a new, independent entity in November 1993, the performance of San Shing in the prior year would be of little or no help in predicting how a new firm, with different ownership, different levels of financing, and different levels of business experience and expertise, would perform in the market.

Mr. Mayes's May 27, 1994 statements to a disinterested person, *i.e.*, Dun & Bradstreet, were made at a time when Mr. Mayes had no reason to foresee that the stainless pipe petitioners and, later, the Department, would inquire as to the dates of Sun's establishment. To the contrary, his later statements on Ta Chen's behalf for the record of the

[10] We note this date coincides with Ta Chen's decision to ''exit the ESP business'' and to rely on newcomers to the pipe industry as its sole distributors in the United States. Thus, contrary to Ta Chen's allusions, the D&B report has not erroneously stated the founding date of San Shing USA, which existed as a distributor of fasteners manufactured by its parent, San Shing Hardware Works, Ltd., in Taiwan prior to its involvement in Ta Chen's pipe distribution. See Case Brief at 107.

fittings and pipe reviews were made at a time when he had a direct interest in sustaining Ta Chen's claim that it was not related to Sun. We conclude that the information contained in the D&B report more accurately reflects the history of Frank McLane's Sun Stainless, Inc.[11]

Comment 3: Use of Best Information Available

Even if the Department had the discretion to find Ta Chen related to San Shing and Sun within the meaning of section 771(13) of the Tariff Act, Ta Chen argues, the Department nonetheless acted unlawfully in applying BIA to Ta Chen. According to Ta Chen, the Department never clearly requested from Ta Chen any information regarding control of San Shing or Sun by Ta Chen, and never indicated what such control might entail. Citing *Sigma Corp.* v. *United States*, 841 F. Supp. 1255 (CIT 1994), Ta Chen asserts that the Department cannot '' 'expect a respondent to be a mind-reader' * * * BIA cannot be imposed for failure to provide information that was not requested, or clearly requested.'' Case Brief at 112 (Ta Chen's emphasis omitted). Ta Chen also points to, *inter alia, Usinor Sacilor* v. *United States*, 907 F. Supp. 426, 427 (CIT 1995), *Creswell Trading Co., Inc.* v. *United States*, 15 F. 3d 1054, 1062 (Fed. Cir. 1994), *Daewoo Electronic Co.* v. *United States*, 13 CIT 253 266, and *Queen's Flowers de Colombia, et al.,* v. *United States*, Slip Op. 96–152 (CIT September 25, 1996) as supporting its contention that the Department may not penalize a respondent ''for failure to provide information on relationships which the respondent had no fair notice that the Department wanted.'' Case Brief at 112 through 114.

The Preliminary Results are especially galling, Ta Chen charges, given what Ta Chen characterizes as the Department's oft-stated position that ''control indicia were irrelevant under the pre-[URAA] statute.'' *Id.* at 114. In cases involving financial inter-dependencies, interlocking and coordinated directors and officers, and de facto joint operation through, *e.g.*, a Japanese keiretsu, Ta Chen claims, the Department has ''repeatedly and publicly'' stated that control was irrelevant to its analysis. *Id.*

Furthermore, Ta Chen avers, Ta Chen submitted for the record the information relied upon by the Department as indicative of control prior to issuing any supplemental questionnaires in this review. With this information in hand, Ta Chen alleges, the Department issued supplemental questionnaires in this review, all covering Ta Chen's sales to San Shing and Sun. At no time, Ta Chen submits, did the Department ask Ta Chen to report the subsequent resales of Ta Chen pipe fittings made by San Shing and Sun Stainless. Ta Chen argues that in *Olympic Adhesives, Inc.* v. *United States*, 899 F. 2d 1565, 1573 (Fed. Cir. 1990) the Court of Appeals for the Federal Circuit (Federal Circuit) held that when a respondent answers fully the Department's questionnaire and receives a supplemental request ''pursuing a different inquiry,'' the respondent has reasonable grounds for believing that the original queries were fully answered. Case Brief at 116. This holds a fortiori, Ta Chen continues, where the information concerning Ta Chen's relationships with San Shing and Sun was submitted prior to the Department's supplemental questionnaire. Why, Ta Chen asks, if the previous information ''clearly indicated'' that Ta Chen was related to San Shing and Sun, did the Department ask Ta Chen for wide-ranging information concerning Ta Chen's sales to San Shing and Sun, but never to report sales by San Shing and Sun? Ta Chen submits that it is not the Department's practice to determine that a response is inadequate in toto because a respondent reports the wrong body of U.S. sales, not to inform the respondent of the deficiency, to ask extensive questions about the putatively useless sales data, and only then to notify the respondent of what the Department now claims was evident all along: that the Department could not use Ta Chen's reported U.S. sales.

Ta Chen concludes that the questionnaires it received did not state that parties could be considered related through control; therefore, Ta Chen declares, it would be unlawful for the Department to proceed on the basis of BIA because Ta Chen failed to address these control issues in its responses.

If the Department continues to hold that Ta Chen's submitted U.S. sales data are unusable for these final results, Ta Chen nonetheless disputes the Preliminary Results' finding that Ta Chen failed to cooperate with the Department and, thus, deserves adverse (or ''first tier'') BIA. First, Ta Chen rejects the Department's conclusion that Ta Chen failed to disclose fully its relationships with San Shing and Sun. Rather, Ta Chen claims, it reported that Ta Chen was not related to San Shing and Sun as defined by the Tariff Act. Only later, Ta Chen avers, in the context of the 1994–1995 administrative review of stainless pipe did the Department phrase the question differently, asking Ta Chen to describe ''all relationships'' with San Shing and Sun. Ta Chen asserts that it answered fully this broader inquiry in its November 12, 1996 response in that proceeding. Ta Chen dismisses petitioner's claim that Ta Chen was forthcoming with this new information only because of a separate legal proceeding as both speculative and irrelevant to these proceedings. Rather, Ta Chen holds, once the Department framed the question as it did in the 1994–1995 pipe review, Ta Chen responded candidly.

Ta Chen also claims that it explained accurately the provenance of the dba names used by San Shing and that, in any event, the Department failed to explain the significance of Ta Chen's account to the decision to apply uncooperative BIA. Furthermore, Ta Chen submits, any sales of subject pipe fittings to ''Sun Stainless, Inc.'' were to Frank McLane's Sun, not to San Shing and its dba Sun, thus making the derivation of these names especially irrelevant to these later sales. Case Brief at 121, citing the Department's verification report for the 1992–1993 review of welded stainless steel pipe. Ta Chen challenges the Preliminary Results' conclusion that Ta Chen misled the Department with respect to the origin of the dba names. According to Ta Chen, its November 12, 1996 submission in the 1994–1995 review of stainless pipe (the relevant portions of which were submitted for the record of this review on December 13, 1996) never claimed that ''all of the dba names would appear in the Ta Chen customer list submitted in the original [LTFV] investigation.'' *Id.* Rather, Ta Chen argues, only some of these names would be drawn from the customer list with the remainder selected because they were ''American[-]sounding.'' *Id.* In any event, Ta Chen continues, the record does indicate the prior existence of six of the eight dba names Ta Chen claims were used by San Shing. Ta Chen claims that Charles Reid, with whom the Department spoke at the October 1994 verification in the pipe review, was also owner of Wholesale Alloys, one of the dba names. As to the use of the name Sun, Ta Chen asserts:

[t]he record does not establish the prior existence of the name Sun in the market. But

[11] This same chronology was corroborated by a foreign market researcher retained by petitioners in the stainless pipe case. See the July 12, 1995 submission of Collier Shannon Rill & Scott at Attachment 5, a public version of which is on file in Room B–099 of the main Commerce building. Even if the D&B analysts interpreted erroneously Mr. Mayes's May 27, 1994 statements, it is clear that Mr. McLane negotiated the purchase of San Shing USA's inventory sometime prior to mid-September 1993, *i.e.*, while he was still a shareholder in, and director of, Ta Chen.

what the record does show is that San Shing essentially went by the name Sun. That is what it was known as in the market and the vast bulk of its sales were under the name Sun. For someone to have the mindset that this was a company known as Sun, but on occasion using other dba names, would be reasonable and reflect the reality of the situation.

Case Brief at 123.

As for one customer name, Anderson Alloys (Anderson), Ta Chen insists that the Department in the Preliminary Results has assumed incorrectly that the Anderson of South Carolina is the same as San Shing's dba Anderson Alloys. The record, Ta Chen notes, is replete with references to two Andersons. The Anderson allegedly owned and operated by Charles Reid had a South Carolina mailing address; any sales to this Anderson, Ta Chen avers, can be segregated in Ta Chen's U.S. sales listing through use of this address. Furthermore, Ta Chen declares, all sales to Anderson after November 1, 1993 were to the South Carolina firm, as San Shing USA was no longer using the dba designation Anderson Alloys. ''By then, Sun was of course a sufficiently known company in the market that there was no reason to use dba designations for name recognition.'' Case Brief at 125.

Ta Chen takes issue with the pipe petitioners' attempt to portray the use of dba names as part of an effort to conceal sales to San Shing. Citing its October 20, 1994 submission in the 1992–1993 stainless pipe review, Ta Chen claims that it reported its U.S. sales to the Department using the names as appearing on the invoices TCI issued to the customer. For example, Ta Chen continues, a majority of its invoices to San Shing bore the name ''Sun Stainless, Inc.'', and were so reported. Other sales to San Shing under its other dba names were likewise reported using the applicable dba name. Furthermore, Ta Chen argues, its submitted sales data reflect a trend where sales to the various dbas were supplanted by sales exclusively to Sun Stainless, Inc., as ''Sun became more well-known and the use of alternative dba names became unnecessary.'' Case Brief at 127.

As for the sales contracts between Ta Chen and San Shing, and between San Shing and Frank McLane, Ta Chen avers that these documents were not unusual, nor did they provide substantial grounds for adverse BIA. Contrary to the Preliminary Results, Ta Chen claims that the June 1992 contract, while allowing the possibility of future negotiations, did, in fact, set the prices for the sale of San Shing's inventory to Frank McLane. According to Ta Chen, sales contracts often omit price terms when, *e.g.*, ''the parties in their repeated dealings have customarily set the price at a later date,'' or in the face of risks of a ''fluctuating market, particularly where delivery is postponed a considerable period of time (for example, 'delivery six months from today.')'' Case Brief at 129, quoting, respectively, Nelson, Deborah L, and Jennifer L. Howicz, Williston on Sales, 5th Ed. at 377, and Hawkland, Will D., Uniform Commercial Code Series, § 2–305:01 at 301 (1997). Under the two-year term of the contract between Ta Chen and San Shing, Ta Chen submits, the open-ended nature of this contract was not remarkable. Ta Chen also claims that the first such purchase, which entailed all of TCI's then-existingU.S. inventory of welded stainless steel pipe, was concluded prior to the preliminary LTFV determination in that case, thereby averting suspension of liquidation. According to Ta Chen, the second incremental purchase six months later was timed to permit TCI to sell all of its existing inventory of pipe fittings prior to suspension of liquidation in this investigation. See Preliminary Determination of Sales at Less Than Fair Value: Certain Stainless Steel Butt-Weld Pipe Fittings From Taiwan, 57 FR 61047 (December 23, 1992). Ta Chen asserts that such agreements between Ta Chen and San Shing were not improvident and that, in any event, these contracts are irrelevant for purposes of the Tariff Act. The Department, Ta Chen alleges, failed to explain why an ''unusual'' contract would suffice to treat the respondent with adverse BIA. Case Brief at 132. When confronted with similar contracts in other cases, Ta Chen argues, the Department concluded that the contracts were ''not necessary or relevant to calculation of the dumping margin,'' and have never been the basis for imposing uncooperative BIA. *Id.*

With respect to Mr. Mayes's involvement with Ta Chen, San Shing, and Sun, Ta Chen maintains that this is also an inappropriate basis for resorting to adverse BIA. Mr. Mayes, Ta Chen declares, worked for Ta Chen, later worked for San Shing, and later still worked for Mr. McLane's Sun; however, ''[Mr.] Mayes never worked for Ta Chen and Sun at the same time.'' Ta Chen submits that an employee leaving one company to work for another ''happens all the time.'' Case Brief at 133. As to Ta Chen's previous statement that Mr. Mayes was never ''employed by San Shing,'' Ta Chen claims that it did note that Mr. Mayes was an ''independent contractor'' for San Shing. An independent contractor is not, Ta Chen declares, an employee. Case Brief at 134. As to monies paid by Ta Chen to Mr. Mayes after his alleged departure from TCI, Ta Chen insists that there was a single payment in 1995 pursuant to the standing agreement between Ta Chen and Mr. Mayes. According to Ta Chen, in return for helping Ta Chen get its start in theU.S. pipe market by turning over his customer lists to Ta Chen, Mr. Mayes would become eligible for a one-time payment should Ta Chen reach a specific profit level. Ta Chen suggests that ''in a cyclical steel industry, where, when profits are good, they are great,'' achieving this level of profit was ''almost an inevitability.'' Case Brief at 135. Ta Chen charges once again that the Department has created a per se rule that payment of money by one party to another is tantamount to employment by the former of the latter. Rather, Ta Chen concludes, this one-time profit-sharing payment conferred no ownership rights and is, thus, irrelevant to the issue of related parties.

Ta Chen next assails the Department's characterization in the Preliminary Results that Ta Chen misled the Department with respect to the debt-financing arrangements between Ta Chen and San Shing and Ta Chen and Sun. According to Ta Chen, its descriptions of these arrangements were ''consistent'' and ''clear'' throughout this review. Ta Chen insists that as early as July 1994 evidence submitted in the stainless pipe case indicated that San Shing's accounts receivable were ''not securing San Shing's debt to TCI but, rather, Ta Chen's debt to a Los Angeles bank.'' Case Brief at 137, see also the Department's Preliminary Results Analysis Memorandum, March 4, 1997 at 6. Furthermore, Ta Chen disagrees with the Preliminary Results' conclusion that it had misled the Department through its various characterizations of the debt arrangements. That Ta Chen pursued one argument to rebut the petitioners' submission as to the implication of the debt assignment, and later pursued a different argument to address petitioners' documentary evidence of those assignments is not, Ta Chen insists, a basis for concluding that Ta Chen misled the Department. Finally, Ta Chen avers, the relevance of Ta Chen's submissions addressing the security arrangements is unclear given the ''undefined'' nature of the Department's control test. Finally, Ta Chen claims that the alternating arguments cited in its Case Brief were only presented in the 1992–1993 review of stainless pipe; thus, they are

irrelevant with respect to a BIA decision in this review of pipe fittings.

Ta Chen claims further that the Department's verification reports in the first administrative review of stainless pipe confirm that the company cooperated fully with the Department. Ta Chen states that it answered accurately every question asked, and supplied all requested documents. ''There is,'' Ta Chen insists, ''no record evidence otherwise.'' *Id.* at 139 and 140. Noting the free access granted to the Department's verifiers, Ta Chen concludes that ''[n]ever once did the verifiers state that, per a control standard for relatedness, they were now going to address common indicia of control, or ask questions thereon. There are no statements in any of the verification reports otherwise.'' Case Brief at 140. Ta Chen dismisses the Preliminary Results' claim that Ta Chen withheld relevant information from the verifiers ''[d]espite repeated probing by [the] verifiers,'' claiming that the Preliminary Results failed to explain what this ''repeated probing'' involved. *Id*, quoting the Department's Preliminary Results Analysis Memorandum at 7. Ta Chen claims that the concern expressed by the Department during verification was whether one party owned the other, not whether one party controlled another. ''Nothing was said or asked by the verifiers to suggest otherwise.'' *Id.* The Department cannot, Ta Chen insists, resort to BIA where it ''does not have the information it wants because it did not ask the right questions.'' *Id.* at 141. Furthermore, even if an alleged failure to be forthcoming in the October 1994 verification of stainless pipe could be cited as grounds for adverse BIA in the 1992—1993 review of that case, Ta Chen continues, such is not the case for the 1992—1994 administrative review of pipe fittings. Conceding that it has, in fact, entered the relevant portions of the 1994 pipe verification reports into the record of this review of butt-weld pipe fittings (and in the 1993—1994 review of stainless pipe), Ta Chen nevertheless insists that it ''did not use the verification in the first pipe review to conceal its relationship with [San Shing and] Sun in these other reviews.'' Case Brief at 142.

Comparing its treatment at the hands of the Department in the instant review to that of respondents in other proceedings, Ta Chen suggests that the Department has elsewhere allowed far more egregious conduct to pass without resort to first-tier BIA. For example, Ta Chen cites a review of Antifriction Bearings (except Tapered Roller Bearings) From France, *et al.*, 57 FR 28360 (June 24, 1992), where the Department applied uncooperative BIA only to those companies that failed to respond to the questionnaire altogether. There, Ta Chen submits, the Department applied second-tier BIA to other firms despite ''extensive misrepresentations and omission in [the firms'] questionnaire responses.'' *Id.* Likewise, Ta Chen cites *Emerson Power Transmission Corp.* v. *United States*, 903 F. Supp. 48 (CIT 1995) (Emerson), and *NSK, Ltd.* v. *United States,* 910 F.Supp. 663 (CIT 1995) (NSK) for the proposition that second-tier BIA is ''proper and consistent with'' Departmental practice where a respondent has tried but failed to cooperate. *Id.* at 144, quoting *NSK, Ltd.* v. *United States*. In addition, Ta Chen avers, a Binational Panel Review convened pursuant to Article 1904 of the North American Free Trade Act concluded that the Department must impose second-tier BIA in light of the respondents' ''repeated efforts to provide answers to the Department's numerous questionnaires.'' *Id.*

Ta Chen notes that the Department applied second-tier BIA in Certain Small Business Telephones From Taiwan, 59 FR 66912 (December 28, 1994), and Certain Fresh Cut Flowers From Colombia, 59 FR 15159 (March 31, 1994), even though respondents in these proceedings improperly reported U.S. sales to related parties, improperly classified ESP sales as PP sales, and misreported data which were crucial to the dumping calculations. In *Sugiyama Chain Co., Ltd.* v. *United States*, 852 F. Supp. 1003 (CIT 1994), a case spanning seven review periods, Ta Chen points out that the Department relied upon second-tier cooperative BIA despite Sugiyama's failure to report its sixty percent equity relationship with its ''dominant'' home market customer. In addition, Ta Chen claims, the Department found that Sugiyama failed to provide its financial statements, had significant unrecorded transactions, and could not reconcile its U.S. and home market sales listings. Yet, Ta Chen asserts, the Department applied cooperative BIA in all but one of the seven reviews at bar. Ta Chen argues that because it disclosed the information upon which the Department based its related-party determination (as distinct from the Sugiyama case, where the Department discovered this information on its own), Ta Chen should not be a candidate for first-tier uncooperative BIA.

As for the choice of a BIA margin, Ta Chen takes issue with the Department's use of the highest margin from the petition as BIA in the Preliminary Results. In Certain Welded Carbon Steel Pipes and Tubes From Thailand, 62 FR 17590 (April 10, 1997), Ta Chen maintains, the Department used an average of the petition margins as BIA even though (i) The Department discovered purchases from and sales to affiliated parties and (ii) The parties' affiliation was evident on the basis of common stock ownership and, thus, the respondent should have known to report the affiliated-party transactions. Similarly, according to Ta Chen, in Brass Sheet and Strip From Sweden, 57 FR 29278 (July 1, 1992), the Department rejected a respondent's questionnaire response in toto, applying first-tier BIA; yet, Ta Chen notes, despite what it characterizes as the more egregious failings of the company's questionnaire response, the Department assigned as adverse BIA the respondent's own margin from the LTFV investigation. Selection of a BIA margin, Ta Chen asserts, should be based upon an objective reading of the respondent's cooperation, rather than any subjective and speculative standard of intent. *Id.* at 148 and 151.

Ta Chen urges the Department to use as BIA Ta Chen's cash deposit rate from the LTFV investigation, claiming this would be sufficient to ''motivate cooperation'' on the part of Ta Chen. *Id.* at 153. Ta Chen reasons that it requested the three pending administrative reviews in order to reduce its antidumping liabilities; if the Department reinstated the prior cash deposit rate of 3.27 percent, ''Ta Chen's purpose in participating in these reviews will have been completely undermined.'' Case Brief at 153. Ta Chen draws a distinction between the pending review of pipe fittings and other cases wherein a respondent is required to participate in an administrative review sought by a petitioner; in the latter case, Ta Chen argues, the threat of a higher margin suggested by petitioner serves to induce respondents' cooperation. This is especially so, Ta Chen argues, where the possible revocation of the antidumping duty order with respect to the respondent hangs in the balance. Ta Chen suggests that it requested the first reviews of pipe fittings and stainless pipe with the expectation that it would receive zero or *de minimis* margins in all three and, thereby, be eligible for revocation. In fact, Ta Chen notes, it requested revocation of the welded stainless steel pipe order during the 1994–1995 review of that case. Failure to cooperate in the instant reviews, Ta Chen concludes, would defeat Ta

Chen's purpose in requesting these reviews in the first place.

Ta Chen distinguishes these reviews from the issue before the Court in *Industria de Fundicao Tupy and American Iron & Alloys Corp.* v. *United States (Industria de Fundicao*), 936 F. Supp. 1009, 1019 (CIT 1989). In contrast to this review, Ta Chen submits, the review at issue in *Industria de Fundicao* was requested by the petitioners. In light of the respondent's failure to cooperate, Ta Chen notes, petitioners in that case presented evidence that this firm's existing dumping margin would be insufficient to induce cooperation. There, Ta Chen concludes, the Department also used an average of the margins alleged in the antidumping petition in establishing a margin based on BIA.

Ta Chen also faults the 76.20 percent BIA margin presented in the Preliminary Results as unlawfully punitive, contending that it is not probative of current conditions. Consistent with the holdings of the Federal Circuit in *D&L Supply Co, Inc.* v. *United States,* (D&L Supply) 1997 WL 230117 at 2 (Fed. Cir. May 8, 1997), Ta Chen asserts that there is an ''interest in selecting a rate that has some relationship to commercial practices in the particular industry.'' Case Brief at 155, quoting D&L Supply. Rather, Ta Chen argues, the Department has already verified that Ta Chen's margins should be 3.27 percent for the stainless pipe case and 0.67 percent for the pipe fittings case. These past margins, Ta Chen submits, are ''substantial evidence'' as to Ta Chen's expected future dumping of subject merchandise. *Id.* at 156. Ta Chen urges the Department to disregard the margins suggested in the petition in favor of the verified dumping margins from the appropriate LTFV determination.

Ta Chen also suggests that the failure of the petitioner in this case to request a review of Ta Chen for the first three PORs is indicative of petitioner's belief that Ta Chen is not dumping pipe fittings into the U.S. market. In administrative reviews requested solely by a respondent who then fails to cooperate, Ta Chen argues, the Department's practice is to impose second-tier BIA. The Department's treatment of Ta Chen in the instant reviews, Ta Chen asserts, constitutes another *per se* rule (*i.e.*, that it is irrelevant whether respondents or petitioners requested the review when selecting BIA), which is contrary to the Department's practice of deciding BIA issues on a case-by-case basis.

In addition, Ta Chen notes what it sees as significant changes in the U.S. market since publication of the antidumping duty order. Ta Chen claims that it is no longer forced to compete against other Taiwanese producers of stainless steel products who, according to Ta Chen, largely withdrew from the U.S. market after the imposition of antidumping duties. In support of this contention, Ta Chen quotes from a 1996 determination by the Canadian International Trade Tribunal which concludes that ''Taiwanese producers other than Ta Chen have been excluded from the U.S. market.'' Ta Chen's Case Brief at 166 and 167. Ta Chen also insists that the health of the U.S. industry has improved markedly since the original investigation in this case. *Id.* at 162 and 163, citing Welded Stainless Steel Pipe From Malaysia, ITC Pub. No. 2744 (March 1994).

According to Ta Chen, petitioner's inaction is especially relevant in light of statements made by representatives of the US industry in other antidumping proceedings. For instance, Ta Chen claims that the US industry testified before the Commission in the investigation of welded stainless steel pipe from Malaysia that the imposition of antidumping duties on stainless pipe from Taiwan had effectively eliminated dumping by Taiwanese producers. *See* ITC Pub. No. 2744 at I–10. Ta Chen cites a telephone conversation purportedly held between the president of a US pipe producer and Robert Shieh wherein this individual stated that he did not think a review of Ta Chen was necessary. Case Brief at 158. In a similar vein, Ta Chen cites the testimony of Mr. Avento, president of the US pipe producer Bristol Metals, insisting that ''Taiwan imports have been checked by the antidumping laws.'' Ta Chen's Case Brief at 162, quoting Economic Effects of Antidumping and Countervailing Duty Orders and Suspension Agreements, ITC Pub. No. 2900 (June 1995). Ta Chen argues that these statements ''support a [zero] percent dumping finding for Ta Chen.'' *Id.* at 163. Furthermore, Ta Chen suggests that these statements, coming after the original petition in this case, are more indicative of present market conditions. Ta Chen also cites to statements submitted by Ta Chen into the record of this review from the pipe company president and another purchaser of Ta Chen's pipe and pipe fittings, both claiming that ''Ta Chen could not have been dumping at a significant rate during this period'' through San Shing and Sun. Case Brief at 164. Taken together, Ta Chen submits that petitioner's failure to request a review, and the subsequent statements as to the state of the U.S. market for stainless steel pipe products after imposition of antidumping duties, indicate that petitioner has ''repudiated [the 76.20 percent margin] as inapplicable to more recent time periods, including the period of [this review].'' *Id.* at 165. Furthermore, Ta Chen argues, the BIA rate from the LTFV investigation applied to producers other than Ta Chen and is, thus, ''irrelevant and unlawful.''

Petitioner assails Ta Chen's attempts ''to unfairly undermine and manipulate the antidumping process to its own advantage,'' claiming that Ta Chen's comportment in this review warrants nothing less than first-tier, uncooperative BIA. Rebuttal Brief at 2. By standing firm in asserting that Ta Chen is not related to San Shing and Sun, petitioner charges, Ta Chen makes ''a complete mockery of both law and reason.'' *Id.* at 6. Rather, petitioner continues, Ta Chen's behavior underscores its persistent unwillingness to cooperate with the Department in this review. Additional evidence of Ta Chen's uncooperative stance, petitioner suggests, is its insistence on treating the identities of certain of its so-called expert witnesses as business proprietary information, thus preventing public disclosure of these individuals' names. Petitioner hints that the true reason for requesting proprietary treatment of these individuals' identities is that their testimony does not reflect accurately common practices in the industry and, therefore, the individuals are loathe to have the stainless steel community at large know of their role in ''such deception.'' *Id.* at 7.

According to petitioner, the timing and quality of Ta Chen's revelations in this review make clear that Ta Chen ''deliberately ignored and/or refused to cooperate'' with the Department's requests for factual information. *Id.* Further, Ta Chen's continued obstinacy is made manifest in Ta Chen's Case Brief, providing vivid testimony that Ta Chen still refuses to cooperate and is actively impeding this review. *Id.* Ta Chen's insistence on reporting its sales to San Shing and Sun, rather than its first sales to truly unrelated parties, petitioner maintains, has deprived the Department of the necessary sales database for calculating Ta Chen's margin in this review. That Ta Chen has ''clearly and deliberately withheld factual information explicitly requested by the Department,'' petitioner argues, dictates that the Department base Ta Chen's margin on total first-tier BIA. *Id.* at 8.

Petitioner insists that there was, in fact, no ambiguity with respect to the Department's definition of related

parties and the specific sales data the Department requested in this review. Rather than being a cooperative respondent, petitioner avers that Ta Chen deliberately misled the Department and only revealed the true nature of its ties to San Shing and Sun when the Department opted to verify Ta Chen's responses in the 1994–1995 review of welded stainless steel pipe. *Id.* Ta Chen's protestations that it did not apprehend that the Department might possibly find it related to San Shing, petitioner asserts, are ''laughable.''

Citing Ta Chen's behavior in other proceedings before the Department, petitioner points to what it characterizes as a pattern of deception in ''its overall track record in the U.S. antidumping arena.'' Rebuttal Brief at 8. For example, petitioner continues, in an investigation of stainless steel flanges from Taiwan, Ta Chen insisted on participating as a voluntary respondent, even though, petitioner alleges, Ta Chen was not a producer of the subject merchandise and had not up to that time supplied stainless steel flanges to the U.S. market. Only when the Department was preparing to verify Ta Chen's sales and cost-of-production responses, petitioner maintains, did Ta Chen abruptly withdraw from the investigation and accept the ''all others'' margin of 48 percent. See Final Determination of Sales at Less Than Fair Value: Certain Forged Stainless Steel Flanges From Taiwan, 58 FR 68859 (December 29, 1993) (Flanges From Taiwan). When considered with Ta Chen's behavior in the reviews of stainless pipe and pipe fittings, petitioner argues, this pattern of behavior indicates Ta Chen's ''strategy of manipulating U.S. dumping law to its advantage.'' *Id.* at 10.

Because Ta Chen ''repeatedly and deliberately lied to the Department'' concerning its U.S. sales in this review, petitioner contends, Ta Chen deserves to be treated as an uncooperative respondent, and to receive total, first-tier BIA as the basis for its margin. *Id.* Petitioner suggests that U.S. antidumping law is essentially fair ''when all parties cooperate by providing timely, factual, reliable information'' to the Department. However, petitioner continues, a respondent debases this fairness through submission of ''untimely, inaccurate, unreliable, misleading information'' at the expense of those parties who do cooperate. *Id.* In such cases, petitioner argues, the Department must take fair and decisive action to protect the integrity of the administrative review process for all interested parties, both respondents and petitioners. In light of Ta Chen's behavior in the instant proceeding, petitioner concludes, the Department must continue to base Ta Chen's margin upon the 76.20 percent BIA rate.

Department's Position

As is clear from our responses to Comments One and Two, we believe that Ta Chen submitted the improper body of U.S. sales to the Department. We believe that the U.S. sales data submitted by Ta Chen in the 1992–1994 administrative review cannot be relied upon in calculating Ta Chen's dumping margin. These flaws affect such a vast majority of Ta Chen's U.S. sales in this review as to render its questionnaire responses unuseable in toto.

We also agree with petitioner that, through its persistent refusal to disclose fully its relationships with San Shing and Sun, despite our manifest interest in these relationships, Ta Chen impeded the conduct of this administrative review and did not act to the best of its ability by providing complete, accurate and verifiable responses to the Department's questionnaires.

As a factual matter, we reject Ta Chen's claims that the Department never clearly requested information from Ta Chen concerning its sales to unrelated customers in the United States, or that the Department was in some way remiss in failing to seek data on San Shing's or Sun's downstream sales. In fact, the only reason we did not insist immediately that Ta Chen report San Shing's and Sun's sales as its first sales to unrelated customers in the United States is because the full extent of these extraordinary relationships was not known until two-and-a-half years after we had received Ta Chen's original response. In our original antidumping questionnaire, issued July 20, 1994, we asked Ta Chen to report its first U.S. sales to unrelated customers, and provided the statutory definition of related parties, including the references to parties being related ''through stock ownership or control or otherwise,'' at Appendix II. Ta Chen instead reported sales to numerous customers, representing each of these as Ta Chen's separate and unrelated customers. Despite the fact that well over eighty percent of Ta Chen's U.S. sales in the instant review were to San Shing, Ta Chen never acknowledged this company's existence in its initial questionnaire response. When petitioners in the stainless pipe case first obtained business and real estate records indicating that Ta Chen might be related to these parties, Ta Chen admitted the existence of San Shing, and presented the wholly unconvincing story of San Shing's entrance into the United States market (see below for more on this point).

As the pipe petitioners adduced additional evidence pointing to Ta Chen's concealment of relevant information, Ta Chen proffered arguments why the Department should not inquire further into these relationships. Due to petitioners' related party allegations, the Department sent a team of five verifiers to Tainan and three to Long Beach in October 1994 to verify Ta Chen's questionnaire responses in the 1992–1993 review of welded stainless steel pipe. Ta Chen argues now that the results of these verifications, as outlined in the Department's reports for the record, prove conclusively that Ta Chen cooperated fully in this review. To the contrary, the results of these verifications do not support Ta Chen's repeated claims that it cooperated with the Department. Despite an extensive verification of related-party issues, Ta Chen withheld all of the information concerning its extensive ties to San Shing and Sun. We were able to verify only those aspects of the control indicia for which the stainless pipe petitioners had already produced documentary evidence for the record: Ta Chen provided information concerning (i) The dates Mr. McLane allegedly sold his stock in Ta Chen, and (ii) Mr. Shieh's ownership of the real property allegedly rented first to San Shing and then to Sun, including the arm's-length nature of the monthly rents charged by Mr. Shieh. Despite having free access to any employee, and despite reviewing TCI's correspondence files with relevant customers, including San Shing and Sun, and Ta Chen's correspondence files with TCI, we did not find a single memorandum, letter, facsimile message, phone message, or any other communication concerning the check-signing ability, the computer access, the debt-financing arrangements, the shared employees, *etc.* And, Ta Chen's protestations notwithstanding, the verifiers did indeed ask questions about, *inter alia*, the facts of, and reasons for, Mr. McLane's establishment of the second ''Sun Stainless, Inc.,'' Mr. Shieh's rental of property to San Shing and Sun, and other questions about their dealings. The Department went so far as to poll other offices within the International Trade Administration for information on Ta Chen, and to interview third parties, such as the president of San Shing Hardware Works, Ltd. in Tainan and several of Ta Chen's putative U.S. agents (including

Mr. Reid) in Long Beach.[12] See Memoranda, Holly A. Kuga to Robert Chu, Ian Davis, Dan Duvall, and to Charles Bell, dated October 5, 1994. Clearly, all of these efforts were to determine if the transactions between these parties were at arm's length. And all were equally unavailing.

Therefore, contrary to the claims in Ta Chen's Case Brief, after two sales and two cost questionnaire responses, and full home market, U.S., and cost-of-production verifications in the 1992–1993 review of stainless pipe, Ta Chen disclosed nothing about the nature of its ties to San Shing and Sun. Finally, in November and December 1996, Ta Chen made further partial disclosures of the facts surrounding its relationships with San Shing and Sun in the context of the 1994–1995 review of stainless pipe. The incomplete nature of these disclosures was made clear when Ta Chen, in its September 3, 1997 Case Brief, disclosed additional salient information for the first time: Ta Chen identified two additional dba names used by San Shing during this period. Ta Chen's partial and belated disclosure of relevant factual information casts further doubt on the reliability of its reported sales data as a whole.

Had Ta Chen been laboring under any misapprehension of the statutory definition of related parties, it could have contacted the Department's officials, as instructed in the questionnaire. Further, the allegations filed by petitioners in the stainless pipe case in July 1994, October 1994, and July 1995 concerning San Shing and Sun Stainless, and the Department's attendant focus upon this issue, put Ta Chen on notice that its relationships with San Shing and Sun were a major issue in this review. Instead, Ta Chen released information piecemeal and incompletely.

Ta Chen's explanations for its behavior during these reviews are in themselves problematic. As a preliminary matter, they make little sense from a business standpoint when one looks beyond the text of the legal arguments. Ta Chen claimed that in 1992 it elected to forsake the ESP business, essentially because reporting ESP sales in the wake of the antidumping duty order would be too burdensome. Ta Chen, relying on the Department's verification reports in the 1992–1993 review of welded stainless steel pipe, continues:

> [a]fter the imposition of the antidumping duty order on [stainless pipe], Ta Chen turned to San Shing Hardware Works, USA (San Shing USA). San Shing USA was established by the president of San Shing Hardware Works Co., Ltd. (San Shing Taiwan) to sell pipe products and fasteners in the United States out of a U.S. warehouse.
>
> *Ta Chen officials stated that San Shing USA contacted Ta Chen's former sales representatives in the United States and established an arrangement whereby San Shing USA, an unknown in the U.S. pipe market, could sell Ta Chen pipe using these representatives' names on a [dba] basis.*

Ta Chen's February 7, 1997 submission at 47 (emphasis added; Ta Chen's bracketing omitted).

Ta Chen, therefore, elected to rely upon San Shing, a company with no prior experience in the stainless steel or tubular products industries, to replace TCI as its sole distributor of stainless steel pipe fittings and stainless pipe in the United States. Having made this decision, San Shing then purportedly on its own struck deals with known pipe dealers in the United States who had been prior TCI customers, whereby San Shing would use these dealers' names as dbas. The customers would then turn over their customer lists to San Shing and stand aside, allowing San Shing effectively to replace them in the distribution chain. However, having gone to such lengths to secure the names of known players in the U.S. market, San Shing then funneled the majority of its sales through the one previously unknown dba, ''Sun Stainless, Inc.''

However, as petitioners in the stainless pipe case pointed out, this arrangement makes neither commercial nor logical sense. See the October 12, 1994 submission of Collier Shannon Rill & Scott at 7. According to Ta Chen's narrative account, San Shing ''was not a well-known name in the U.S. pipe business.'' Ta Chen's December 13, 1996 submission at 54. Therefore, San Shing, operating under its various dba names, e.g., Sun and Anderson Alloys, sold Ta Chen pipe and pipe fittings to the same customers who formerly purchased pipe from TCI's customers, e.g., Sun and Anderson Alloys. The stated reason for this arrangement is that downstream purchasers who did not know San Shing would be put at ease by allowing them to deal with a name they knew. But clearly Sun's and Anderson's former customers knew with whom they were dealing. If San Shing replaced these dealers, their customers would not ''feel more comfortable'' because they were buying pipe from ''San Shing, dba Sun Stainless,'' or ''San Shing, dba Anderson Alloys.'' On a more elementary level, this narrative would have us believe that established pipe distributors in the United States, who earned their income by purchasing pipe fittings from TCI and reselling them after a markup to various end users, simply stepped aside and allowed San Shing to use their businesses' names to sell to their former customers. Such a step is inconsistent with commercial reality, and yet Ta Chen claims to have found not one, but eight stainless pipe products distributors amenable to this arrangement.

Ta Chen also misstated the origins of the dba names themselves. In a December 20, 1996 submission in the 1994–1995 review of stainless pipe Ta Chen, again quoting the Department's verification reports, explained that:

> [Ta Chen] officials stated that San Shing USA contacted Ta Chen's former representatives in the United States and established an arrangement whereby San Shing USA, an unknown in the U.S. pipe market, could sell Ta Chen pipe using the representative's names on a [dba] basis. According to TCI, its sales representatives readily agreed.

Ta Chen's February 7, 1997 submission at 62, quoting the Department's November 6, 1996 verification reports.

To verify this claim the Department introduced into the record of this review Ta Chen's U.S. customer list from the LTFV investigation of stainless pipe. See Memorandum for the File, February 24, 1997. The most significant dba name, ''Sun Stainless, Inc.,'' is not found on this list. In fact, only three of the admitted eight dbas were prior Ta Chen customers. In explaining the need for San Shing to use dbas and how San Shing came to select the names it used, Ta Chen misstated the origins of these names, and never explained for the record where the dba names, most significantly ''Sun Stainless, Inc.,'' originated. Ta Chen explains its earlier misstatements by arguing in its case brief that its November 12, 1996 submission in the 1994–1995 pipe review did not claim that ''all'' the dba names were those of prior TCI customers. While this is true, Ta Chen did so claim when first confronted with the pipe petitioners' knowledge of San Shing's and Sun's existence. Given the absence of evidence on the record that any sale of assets to Frank McLane ever took place (aside from Ta Chen's undocumented claims), given the lack of clarity surrounding Sun's 1992 founding, and given Ta Chen's failure to document for the record precisely how and why San Shing came to use dba names in the first place, Ta Chen's version of events is neither credible nor supported by evidence.

[12] It should be noted that none of these individuals provided any information about Ta Chen's and TCI's extraordinary ties to San Shing and Sun.

Other factual aspects of the record are also troubling. For example, we continue to believe that the sales contract involving Chih Chou Chang and Robert Shieh was, in fact, highly unusual. Ta Chen argues that sales contracts with no prices are commonplace when such transactions are customary between the parties, or where the date of delivery is in doubt. That was certainly not the case here. These transactions were not a ''customary practice'' between Ta Chen and San Shing, they were one-time deals involving the transfer of Ta Chen's entire existing inventory of stainless steel pipe and stainless steel pipe fittings to San Shing. Delayed delivery was also not at issue, as delivery was immediate, with Robert Shieh arranging to move the merchandise from one of his properties (TCI's warehouse) to another of his properties nearby, rented to San Shing. The relevance of the contract in the present discussion is that its commercially-unrealistic terms further indicate that San Shing was crafted by, and related to, Ta Chen. We stand by our preliminary conclusion that ''[t]he terms of this contract do not comport with Ta Chen's repeated assertions that San Shing was new to the pipe trade, and so lacked familiarity with the U.S. pipe market that it was compelled to use 'dba' names which 'sounded more American.' '' Preliminary Analysis Memorandum, March 4, 1997, at 7 and 8 (original bracketing omitted).

We also disagree with Ta Chen's description of the activities of W. Kendall Mayes. The record clearly indicates that Mr. Mayes, working with TCI since its inception, took over the day-to-day management of first San Shing and then Sun Stainless at the insistence of Ta Chen, and not as a free agent who coincidentally migrated between these three firms as a normal result of normal relocations within a tightly restricted industry environment. As to the ''independent contractor'' relationship with Ta Chen, the record evidence indicates that Mr. Mayes worked exclusively on behalf of Ta Chen, used Ta Chen office space and equipment, was paid monthly by Ta Chen, was covered under Ta Chen's group health insurance policy (even after he putatively ended his employment with Ta Chen), and continued to enjoy substantial financial benefits from his relationships with Ta Chen and Mr. Shieh long after this relationship allegedly ended. Furthermore, in return for this ''independent contractor'' relationship, Mr. Mayes had to provide to Ta Chen his own list of customers, thus effectively selling his business to Ta Chen. We also disagree with Ta Chen's conclusion that the one-time payment to Mr. Mayes conferred no control over pricing. Rather, given Mr. Mayes's successive roles as sales manager for TCI, San Shing, and Sun Stainless, together with Ta Chen's admitted role in negotiating the final prices between San Shing and Sun and their unrelated customers, the record indicates that Mr. Mayes enjoyed a knowledge and control of prices unknown between unrelated parties. Finally, with a sizeable payment to Mr. Mayes from Ta Chen dependent upon Ta Chen's profitability, Mr. Mayes's own self-interest lay not in negotiating truly arm's-length prices between San Shing and Sun and Ta Chen, but in maximizing Ta Chen's profits in these transactions. This relationship further buttresses the Department's Preliminary Results determination that these transactions were not, in fact, at arm's-length. Rather than enforcing a ''per se'' rule concerning the exchange of money between Ta Chen and Mr. Mayes, we have drawn the only reasonable conclusion possible in light of the record evidence.

As for sales made to Anderson Alloys, Ta Chen mistakenly argues that the Department can sort these sales by customer address to segregate sales made to the ''real'' Anderson Alloys in South Carolina from those made to the dba Anderson Alloys. However, we have no idea which sales are to which entity, as Ta Chen used the same address and customer code for both Andersons. More to the point, the ability to segregate sales to Charles Reid's Anderson and sales to San Shing's dba Anderson would have no bearing on our decision to resort to total first-tier BIA. Rather, we cannot ''use only portions of a response that were verifiable since this 'would allow respondents to selectively submit data that would be to their benefit in the analysis of their selling practices.' '' *Chinsung Industries Co., Ltd. et al.* v. *United States,* 705 F. Supp 598, 601 (CIT 1989) (citations omitted). As the Court noted in *Persico Pizzamiglio, S.A.* v. *United States,* by allowing the Department ''to reject a submission in toto, the court encourages full disclosure by the respondent, because only full disclosure will lead to a dumping margin lower than that established by employing BIA.'' *Persico Pizzamiglio, S.A.* v. *United States,* 18 CIT 299 (CIT 1994).

Finally, with respect to Ta Chen's reliance upon the statements of Messrs. Avento and Reid to support its arguments, we note Bristol Metal's and Mr. Avento's longstanding affiliation with Ta Chen. Bristol Metals was one of Mr. Shieh's original partners in founding Ta Chen, and Joseph Avento himself was at one time on Ta Chen's board of directors. See, *e.g.,* Ta Chen's September 19, 1994 questionnaire response at Exhibit 2, and Ta Chen's December 13, 1996 submission at 50. Mr. Avento later joined the petitioners in the stainless pipe case in initiating that investigation. He now appears before the Department as Ta Chen's witness and advocate. Neither in its case brief nor in its original filing of Mr. Avento's statement has Ta Chen elected to reveal the current relationships between Ta Chen, Bristol Metals, and Mr. Avento, such as whether Ta Chen and Bristol make purchases from each other, or whether either holds stock in the other. Given Mr. Avento's ongoing ties to Mr. Shieh and Ta Chen, the unsubstantiated nature of his testimony, and Ta Chen's unwillingness to disclose for the record Mr. Avento's current dealings with Mr. Shieh and Ta Chen, we are unable to establish his credibility as a witness about the U.S. stainless steel pipe and pipe fittings industries as a whole.

As for Charles Reid, Ta Chen acknowledges for the public record that Mr. Reid, using at least three trade names, was a customer of Ta Chen during the investigation and first period of administrative review. See Case Brief at 122.

We conclude, therefore, that the use of total, adverse BIA is appropriate in this case. The statute's provision for use of BIA is, as the Federal Circuit has held, ''an investigative tool, which the [Department] may wield as an informal club over recalcitrant respondents whose failure to cooperate may work against their best interest.'' *Atlantic Sugar Ltd.* v. *United States,* 744 F.2d 1556, 1560 (Fed. Cir. 1984). In the absence of subpoena power, the Department ''cannot be left merely to the largesse of the parties at their discretion to supply the [Department] with information. * * * Otherwise, alleged unfair traders would be able to control the amount of antidumping duties by selectively providing the ITA with information.'' *Olympic Adhesives, Inc.* v. *United States,* 899 F.2d 1565, 1571 (Fed. Cir. 1990). The decision to resort to BIA in an administrative review is made on a case-by-case basis after evaluating all evidence in the administrative record. With respect to the selection of BIA, the Department is granted considerable deference in deciding what constitutes the ''best'' information available. See *Allied-Signal Aerospace Corp.* v. *United States,* 966

F.2d 1185, 1191 (Fed. Cir. 1993). The courts have long held that ''it is for Commerce, not the respondent, to determine what is the best information'' available. *Yamaha Motor Co.* v. *United States,* 910 F. Supp. 679, 688 (CIT, 1995).

As discussed, we believe Ta Chen has impeded this administrative review through the submission of inaccurate and incomplete information, and through its lack of cooperation in bringing forth factual information known by Ta Chen to be of immediate relevance to these proceedings. We also agree with petitioner that Ta Chen's conduct in this review warrants use of first-tier BIA.

We also find that Ta Chen's citations to past Departmental determinations in support of using cooperative, second-tier BIA are not on point. In Fresh Cut Flowers From Colombia, for example, the respondent's related entities had either gone out of business entirely, or were in the process of liquidation, and thus the firms were unable to provide sales data to the Department. Similarly, in Certain Small Business Telephones From Taiwan, the affiliated U.S. customer of respondent Bitronics was out of business. We concluded that ''[s]ince Bitronics made substantial attempts to submit information to the Department,'' second-tier, or cooperative, BIA would be most appropriate. See Certain Small Business Telephones From Taiwan; Preliminary Results of Administrative Review, 59 FR 66912, 66913 (December 28, 1994). In the instant case, despite the 1995 sale of Sun to Picol Enterprises, Ta Chen has never indicated any such difficulty in accessing San Shing's and Sun's records, and has even submitted these companies' federal income tax returns in the record of this review.

Emerson and NSK, cited by Ta Chen as grounds for use of second-tier BIA, are likewise not on point. Emerson involved a review of antifriction bearings from Japan where the Department, in two significant departures from standard practice, determined it would (i) use a sampling of home market sales, and (ii) use annual average home market prices as the basis for FMV, both to reduce the complexity and reporting burden of the review. Respondent Nippon Pillow Block Sales made good faith efforts to respond to the Department's questionnaire, but misinterpreted the instructions concerning which home market sales it would be required to report for purposes of sampling.[13] In addition, the Department discovered other unreported sales at verification. The Department determined that, while Nippon had attempted to cooperate, it had failed to provide the home market sales data necessary to calculate annual weighted-average prices; therefore, Nippon's margin was based on second-tier BIA. In NSK, involving a review of tapered roller bearings (TRBs) from Japan, plaintiff NSK submitted complete, verifiable, and timely U.S. and home market sales responses. However, NSK balked when directed to submit cost of production data on TRB parts acquired from related suppliers, arguing that the Department had no legal authority to request these data absent ''a specific and objective basis'' for suspecting that NSK's prices for the parts had been less than the suppliers' cost of production. NSK, 910 F. Supp. at 666. The Court held that we properly rejected NSK's arguments, and that we correctly resorted to partial second-tier BIA for the missing cost data.[14] In each of the cited cases, while the responses were found to be deficient, the respondents attempted to cooperate with the Department's review. We contrast the behavior of these respondents with that of Ta Chen, and find that Ta Chen not only failed to submit the proper body of U.S. sales, but impeded the review. We conclude, therefore, that it would be inappropriate to base Ta Chen's margin for this review on second-tier, or cooperative, BIA.

Similarly, we cannot accede to Ta Chen's suggestion that we apply its margin from the LTFV investigation as first-tier BIA, as this would amount to rewarding Ta Chen for its failure to disclose essential facts to the Department and to report the proper body of its U.S. sales. Were we to consider Ta Chen's margin, which was calculated in a segment of these proceedings wherein Ta Chen was deemed cooperative and its responses fully verified, as first-tier BIA, we would effectively cede control of this review to Ta Chen. The respondent would be free to submit selective, misleading, or inaccurate information, secure in its knowledge that the worst fate it could expect would be to receive its prior cash deposit rate as BIA. See *Olympic Adhesives, Inc.* v. *United States,* 899 F.2d 1565, 1572 (Fed. Cir. 1990). We find the Court's holdings in *Industria de Fundicao* to be directly on point: ''the Court will not allow respondent to cap its antidumping rate by refusing to provide updated information to [the Department].'' *Industria de Fundicao,* 936 F. Supp 1009, 1011. Contrary to Ta Chen's suggested approach, our aim in selecting BIA for non-cooperating respondents is to choose a margin which is sufficiently adverse ''to induce respondents to provide [the Department] with complete and accurate information in a timely fashion.'' *National Steel Corp.* v. *United States,* 913 F. Supp 593 (CIT 1996). Likewise, we find that the antidumping proceedings of other countries, such as Canada, are irrelevant to our selection of BIA in this review which is being conducted pursuant to U.S. antidumping law. Furthermore, aside from its irrelevance, information concerning antidumping proceedings before Canadian authorities is not in the administrative record of this review.

We also reject Ta Chen's assertion that the 76.20 percent BIA margin is inappropriate because it was drawn from an earlier segment of these proceedings. In *Mitsuboshi Belting Corp. Ltd.* v. *United States,* the Court, relying upon the findings in Rhone Poulenc, found that the Department's use of a margin drawn from a LTFV investigation was reasonable and, further, that ''best information'' doesn't necessarily mean ''most recent information.'' The Court also rejected plaintiff's claim that the Department's choice of BIA was unreasonably harsh:

> to be properly characterized as ''punitive,'' the agency would have had to reject low margin information in favor of high margin information that was demonstrably less probative of current conditions. Here, the agency only presumed that the highest prior margin was the best information of current margins. * * * We believe a permissible interpretation of the statute allows the agency to make such a presumption and that the presumption is not ''punitive.'' Rather, it reflects a common sense inference that the highest prior margin is the most probative evidence of current margins because, if it were not so, the importer, knowing of the rule, would have produced current information showing the margin to be less.

Mitsuboshi Belting Ltd. and MBL (USA) Corp. v. *United States.,* Court No. 93–09–00640, Slip Op. 97–28 (CIT March 12, 1997).

Likewise, in *Sugiyama Chain Co., Ltd. et al.,* v. *United States,* the plaintiff contested our selection of best information available as having no probative value concerning Sugiyama's current margins because the rate taken from the LTFV investigation had ''only a tenuous link to Sugiyama Chain's margins in the instant review.'' The Court approved of our use of the highest prior margin as BIA, noting that the

[13] Thus, while it is true that Nippon ''failed to report approximately 80% of its home market sales,'' it is only fair to note that Nippon was required to report only a portion of its home market sales for sampling purposes to begin with. Emerson, 903 F. Supp. at 52.

[14] The Court did remand NSK, ordering the Department to correct its application of second-tier BIA; the decision to use BIA was, however, upheld.

Department ''can make a common sense inference—indeed, there is a rebuttable presumption—that the highest prior margin is the most probative evidence indicative of the current margin.'' *Sugiyama Chain Co., Ltd., et al.* v. *United States,* 880 F. Supp. 869, 873 (CIT 1995); see also *Rhone Poulenc, Inc.,* v. *United States,* 710 F. Supp. 341, 346 (CIT 1989) (''There is no mention in the statute or regulations that the best information available is the most recent information available.''); *aff'd* 899 F.2d 1185 (Fed. Cir. 1990). Furthermore, we reject Ta Chen's suggestion that the 76.20 percent margin has been ''verified as wrong.'' Our use of a margin drawn from data supplied by the petitioner comports fully with section 776(b) of the Tariff Act. It is not necessary, as Ta Chen appears to argue, for the Department to conduct an economic analysis of the stainless steel fittings industry before using a margin based on petitioner's data to determine the validity of these data. See *Tai Ying Metal Industries Co.* v. *United States,* 712 F. Supp 973, 978 (CIT 1989) (''it is reasonable for Commerce to rely upon the published margin from the LTFV investigation as the best information available without reassessing the record therefrom''). Furthermore, as petitioner points out, Ta Chen fails to note a prior investigation involving Ta Chen where the Department acted precisely as we have acted here, i.e., using the highest margin from the petition as first-tier BIA. In Certain Forged Stainless Steel Flanges From Taiwan Ta Chen was deemed an uncooperative respondent because it ''withdrew'' from the investigation immediately prior to verification. As first-tier, uncooperative BIA the Department chose the highest margin alleged in the petition, 48 percent, applying this rate to Ta Chen and to two other uncooperative respondents. See Certain Forged Stainless Steel Flanges From Taiwan, 58 FR 68859 (December 29, 1993).

The 76.20 percent margin has stood unchallenged for over six years as the first-tier BIA margin and, in fact, still applies to one other Taiwan manufacturer of subject merchandise. See Amended Final Determination and Antidumping Duty Order, 58 FR 33250, 33251 (June 16, 1993). We conclude that use of this margin from the LTFV investigation is entirely consistent with the statute, the Department's regulations, and our past precedent.

We also find inapposite Ta Chen's argument that, since petitioner did not request this review, petitioner is satisfied with Ta Chen's existing cash deposit rate. Whether or not petitioner requested this review is, at this point, irrelevant, and cannot be construed in any way as evidence of Ta Chen's dumping activities, or lack thereof, during the first period of review. Ta Chen's reference to our determination concerning Yamaha in Antifriction Bearings From France, *et al.* (57 FR 28360) is entirely inapposite. There, the Department was merely summarizing the extent of Yamaha's cooperation in the review, noting that ''Yamaha requested the review, provided the Department with questionnaire responses, and submitted to verification of its response * * *'' Ta Chen posits this one sentence as evidence of a per se rule that if a respondent requests a review, it is immune from first-tier BIA. Not only is this contention historically wrong, it ignores Ta Chen's failure to cooperate in this review. As the Court noted in Industria de Fundicao, a respondent may not cap its antidumping margins by refusing to cooperate in an administrative review.

Final Results of Review

Based on our review of the arguments presented above, for these final results we have made no changes in the margin for Ta Chen. We have determined that Ta Chen's weighted-average margin for the period December 23, 1992 through May 31, 1994 is 76.20 percent.

The Department shall determine, and the US Customs Service shall assess, antidumping duties on all appropriate entries. The Department will issue appraisement instructions directly to Customs.

Furthermore, the following deposit requirements will be effective upon completion of the final results of this administrative review for all shipments of certain stainless steel butt-weld pipe fittings from Taiwan entered, or withdrawn from warehouse, for consumption on or after the publication of the final results of this administrative review, as provided in section 751(a)(1) of the Tariff Act:

(1) The cash deposit rate for Ta Chen will be 76.20 percent, the rate established in this administrative review;

(2) For previously reviewed or investigated companies other than Ta Chen, the cash deposit rate will continue to be the company-specific rate published for the most recent period;

(3) If the exporter is not a firm covered in this review, a prior review, or the LTFV investigation, but the manufacturer is, the cash deposit rate will be the rate established for the most recent period for the manufacturer of the merchandise; and

(4) If neither the exporter nor the manufacturer is a firm covered in this or any previous review conducted by the Department, the cash deposit rate will be 51.01 percent. See Amended Final Determination and Antidumping Duty Order, 58 FR 33250, 33251 (June 16, 1993).

This notice also serves as a final reminder to importers of their responsibility under 19 CFR 353.26 to file a certificate regarding the reimbursement of antidumping duties prior to liquidation of the relevant entries during this review period. Failure to comply with this requirement could result in the Secretary's presumption that reimbursement of the antidumping duties occurred and the subsequent assessment of double antidumping duties.

This notice also serves as a reminder to parties subject to administrative protective orders (APOs) of their responsibility concerning the disposition of proprietary information disclosed under APO in accordance with 19 CFR 353.34(d). Timely written notification of the return or destruction of APO materials, or conversion to judicial protective order, is hereby requested. Failure to comply with the regulations and the terms of an APO is a sanctionable violation.

This determination is issued and published in accordance with sections 751(a)(1) and 777(i)(1) of the Tariff Act (19 U.S.C. 1675(a)(1) and 1677f(i)(1)).

Dated: January 4, 2000.

Robert S. LaRussa,

Assistant Secretary for Import Administration.

[FR Doc. 00–872 Filed 1–12–00; 8:45 am]

BILLING CODE 3510–DS–P

DEPARTMENT OF COMMERCE

International Trade Administration

[A–580–829]

Stainless Steel Wire Rod from Korea: Recission of Antidumping Administrative Review

AGENCY: Import Administration, International Trade Administration, Department of Commerce.

SUMMARY: On November 4, 1999, the Department of Commerce (''the Department'') initiated an administrative review of the antidumping duty order on stainless steel wire rod from Korea for Changwon Specialty Steel Co., Ltd., Dongbang Special Steel Co., Ltd., and Pohang Iron and Steel Co., Ltd., (collectively, ''respondents''), manufacturers and exporters of stainless steel wire rod, for the period March 5, 1998 through

August 31, 1999. The Department is rescinding this review after receiving a timely withdrawal from respondents of their request for review.

EFFECTIVE DATE: January 13, 2000.

FOR FURTHER INFORMATION CONTACT: James Terpstra or Frank Thomson, Group II, Office 4, Import Administration, International Trade Administration, U.S. Department of Commerce, 14th Street and Constitution Avenue, NW, Washington, DC 20230; telephone (202) 482–3965 and (202) 482–4793, respectively.

The Applicable Statute

Unless otherwise indicated, all citations to the Tariff Act of 1930, as amended (''the Act''), are references to the provisions effective January 1, 1995, the effective date of the Uruguay Round Agreements Act (''URAA''). In addition, unless otherwise indicated, all citations to the Department's regulations are to the regulations at 19 CFR Part 351 (1999).

Background

On September 30, 1999, respondents requested that the Department conduct an administrative review of the subject merchandise it exported from Korea for the period March 5, 1998 through August 31, 1999.

On November 4, 1999, the Department published in the **Federal Register** (64 FR 60161) a notice of initiation of administrative review with respect to respondents for the period March 5, 1998 through August 31, 1999. On November 18, 1999, respondents requested that they be allowed to withdraw their request for a review and that the review be terminated.

Rescission of Review

Pursuant to 19 CFR 351.213(d)(1), the Department will rescind an administrative review if a party that requested the review withdraws the request within 90 days of the date of publication of the notice of initiation of the requested review. Because respondents' request for termination was submitted within the 90-day time limit, and there were no requests for review from other interested parties, we are rescinding this review. We will issue appropriate appraisement instructions directly to the U.S. Customs Service.

This notice is in accordance with section 771(i) of the Tariff Act of 1930, as amended, and 19 CFR 351.213(d)(4).

Dated: January 7, 2000.

Holly A. Kuga,

Acting Deputy Assistant Secretary, Import Administration, Group II.

[FR Doc. 00–875 Filed 1–12–00; 8:45 am]

BILLING CODE 3510–DS–P

DEPARTMENT OF COMMERCE

International Trade Administration

Notice of Showcase Exhibit of U.S. Exports

AGENCY: International Trade Administration, Commerce.

SUMMARY: The International Trade Administration (''ITA'') of the Department of Commerce announces an exhibition of exported U.S. products and services. The exhibition will showcase U.S. exports by displaying successfully exported products and services at ITA headquarters in Washington, DC, to highlight the benefits of exporting and the impact of exports on the U.S. economy. Companies and trade associations are encouraged to express interest in providing exhibit material on loan. The textile and apparel sectors will be the next industrial sector to be represented.

DATES: Expressions of interest should be submitted by January 30, 2000.

ADDRESSES: Office of Textiles and Apparel, Export Showcase, Room 3100; U.S. Department of Commerce; 1401 Constitution Avenue, NW, Washington, DC 20230.

FOR FURTHER INFORMATION CONTACT: Ms. Kim Bang-Nguyen, U.S. Department of Commerce/ITA, U.S. Department of Commerce, 1401 Constitution Avenue, NW, Washington, DC 20230. Telephone (202) 482–4805; fax (202) 482–2859.

SUPPLEMENTARY INFORMATION: Background: ITA is showcasing U.S. exports by exhibiting successfully exported products and services at its headquarters in Washington, DC, to highlight the benefits of exporting and the impact of exports on the U.S. economy. The exhibit, which represents a series of industries and a variety of companies, is located in the Office of the Under Secretary for International Trade. The exhibit is rotated approximately every four months.

The third sector to be displayed is the textile and apparel sector. Companies and trade associations in this sector are encouraged to express interest in showcasing their exports of goods and/or services by contacting ITA through the individual listed above. Displayed items may include illustrations, miniaturized or actual models, or actual products. .

Extensive shelf-space and floor-space are available in this executive-style office.

Selection Process:

Items will be selected for exhibition on the basis of the following factors:

(1) Items must be manufactured or produced in the 50 United States and labeled ''Made in USA''. In addition, products made from materials of U.S. origin but not assembles in the United States may not be displayed.

(2) The items must relate to the industry selected by ITA and be suitable for exhibition in a limited space.

(3) The company must not be owned or controlled, indirectly or directly, by a foreign government.

(4) Items chosen should reflect diversity of company size, location, demographics, and traditional under-representation in business.

Other conditions: Displayed items will be considered loans to the Department. Companies will be responsible for shipment of the item to and from the Commerce Department, for obtaining appropriate insurance, and for all related costs.

Time Frame for Applications: Expressions of interest from the textile and apparel sectors should be received by January 30, 2000. Expressions of interest should be sent to the ITA official identified above.

A **Federal Register** notice will be published subsequently to announce the next sector to be highlighted.

Authority: 15 U.S.C. 1512.

Dated: January 7, 2000.

David L. Aaron,

Under Secretary for International Trade.

[FR Doc. 00–802 Filed 1–12–00; 8:45 am]

BILLING CODE 3510–DR–P

DEPARTMENT OF COMMERCE

National Oceanic and Atmospheric Administration

[I.D. 011000A]

Western Pacific Fishery Management Council; Public Meeting

AGENCY: National Marine Fisheries Service (NMFS), National Oceanic and Atmospheric Administration (NOAA), Commerce.

ACTION: Notice of public meeting.

SUMMARY: The Western Pacific Fishery Management Council will hold a joint meeting of Hawaii members of its Coral Reef Ecosystem Plan Team, Ecosystem and Habitat Advisory Panel, Bottomfish Plan Team and Advisory Panel, and Crustaceans Plan Team and Advisory

Panel. The primary purpose of the joint meeting is to review the Council's preferred alternative for its coral reef ecosystem fishery management plan, especially with regard to possible interactions from existing fisheries in the Northwestern Hawaiian Islands (NWHI), and related issues.

DATES: The joint meeting will be held on January 25, 2000, from 9:00 a.m. to 5:00 p.m., and on January 26–27, 2000, from 8:30 a.m. to 5:00 p.m.

ADDRESSES: The joint meeting will be held at the Council office conference rooms, 1164 Bishop St., Suite 1400, Honolulu, Hawaii; telephone: (808) 522–8220.

Council address: Western Pacific Fishery Management Council, 1164 Bishop St., Suite 1400, Honolulu, HI, 96813.

FOR FURTHER INFORMATION CONTACT: Kitty M. Simonds, Executive Director; telephone (808) 522–8220.

SUPPLEMENTARY INFORMATION: The Hawaii plan team and advisory panel members will discuss and may make recommendations to the Council on the agenda items. The order in which agenda items will be addressed is tentative.

9:00 a.m. Tuesday, January 25, 2000

A. Review of the Council's preferred alternative for Coral Reef Ecosystem Fishery Management plan (CRE-FMP)/ preliminary draft environmental impact statement (DEIS)

1. Fishing permit and reporting requirements
2. Allowable fishing gear and methods
3. Marine Protected Areas
4. Framework actions
5. Plan Team coordination

B. Review of public comments on draft CRE-FMP/DEIS

1. American Samoa
2. Guam/Northern Mariana Islands
3. Hawaii

C. Review of national Coral Reef Task Force initiatives

D. Review of public scoping comments for DEIS for the bottomfish and crustaceans FMPs

1. Risk of impacts to NWHI coral reef ecosystems

E. Concerns regarding NWHI fisheries

1. Marine Mammal Commission
2. Monk Seal Recovery Team
3. Pelagic shark fishing
4. Agency concerns:

(a) U.S. Fish and Wildlife Service
(b) National Marine Fisheries Service
(c) Hawaii Department of Land and Natural Resources

8:30 a.m. Wednesday, January 26, 2000

Coral Reef Ecosystem Plan Team and Ecosystem & Habitat Advisory Panel meeting jointly

Bottomfish Plan Team and Advisory Panel meeting jointly

Crustaceans Plan Team and Advisory Panel meeting jointly

F. Discussion of issues from the first day

1. Draft coral reef ecosystem FMP/ preliminary DEIS
2. Impacts of lobster and bottomfish fisheries on NWHI coral reef ecosystems
3. National Coral Reef Task Force initiatives
4. Agency/non-governmental organizations (NGO) issues regarding NWHI fisheries

8:30 a.m. Thursday, January 27, 2000

Each advisory body meeting separately

G. Final discussion and recommendations to Council

1. Draft coral reef ecosystem FMP/ preliminary DEIS
2. Impacts of lobster and bottomfish fisheries on NWHI coral reef ecosystems
3. National Coral Reef Task Force initiatives
4. Agency/NGO issues regarding NWHI fisheries

H. Other business

1. Scheduling of next meeting

Although non-emergency issues not contained in this agenday may come before this Council for discussion, these issues may not be the subject of formal Council action during this meeting. Council action will be restricted to those issues specifically listed in this document and any issues arising after publication of this document that require emergency action under section 305(c) of the Magnuson-Stevens Fishery Conservation and Management Act, provided the public has been notified of the Council's intent to take final action to address the emergency.

Special Accommodations

This meeting is physically accessible to people with disabilities. Requests for sign language interpretation or other auxiliary aids should be directed to Kitty M. Simonds, (808) 522–8220 (voice) or (808) 522–8226 (fax), at least 5 days prior to the meeting date.

Dated: January 10, 2000.

Richard W. Surdi,

Acting Director, Office of Sustainable Fisheries, National Marine Fisheries Service.

[FR Doc. 00–839 Filed 1–12–00; 8:45 am]

BILLING CODE 3510–22–F

DEPARTMENT OF EDUCATION

National Advisory Council on Indian Education Meeting

AGENCY: National Advisory Council on Indian Education, ED.

ACTION: Notice of open meeting.

SUMMARY: This notice sets forth the schedule and proposed agenda of a forthcoming meeting of the National Advisory Council on Indian Education. The purposes of this meeting are to discuss the Presidential Executive Order 13096 on American Indian and Alaska Native Education, and to discuss the reauthorization of programs under the Elementary and Secondary Education Act of 1965 (ESEA), or which the Title IX Indian Education Program is included. Notice of this meeting is required under Section 10(a)(2) of the Federal Advisory Committee Act and is intended to notify the public of their opportunity to attend.

Executive Order 13096 was signed by President Clinton on August 6, 1998. The order committed the Federal Government to developing a comprehensive response to the national need for better education for American Indian and Alaska Native people. Particular attention is to be provided in the areas of reading, mathematics and science, improving postsecondary attendance and completion rates, and ensuring that Indian students have access to strong, safe, and drug-free school environments. Specific long-term strategies for meeting these objectives are being developed by a Federal Interagency Task Force.

DATES: The LaQuinta Inn, Phoenix, AZ, January 26, 2000 1:30 p.m.–5 p.m. and January 27, 9 a..m.–4:30 p.m.

ADDRESSES: 2510 West Greenway Rd., Phoenix, AZ (602) 993–0800.

FOR FURTHER INFORMATION CONTACT: Dr. David Beaulieu, Director, Office of Indian Education, 400 Maryland Avenue, SW, Washington, DC 20202. Telephone: (202) 260–3774; Fax: (202) 260–7779.

SUPPLEMENTARY INFORMATION: The National Advisory Council on Indian Education is a presidentially appointed advisory council on Indian education established under Section 9151 of the Elementary and Secondary Education Act of 1965, as amended (20 U.S.C. 7871). The Council advises the Secretary of Education and the Congress on funding and administration of programs with respect to which the Secretary has jurisdiction and that include Indian children and adults as participants or in which those children

and adults benefit. The Council also makes recommendations to the Secretary for filling the position of Director of Indian Education whenever a vacancy occurs. The meeting of the Council is open to the public without advanced registration. Public attendance may be limited to the space without advanced registration. Public attendance may be limited to the space available. Members of the public may make statements during the meetings, to the extent time permits, and file written statements with the Council for its consideration. Written statements should be submitted to the address listed above.

A summary of the proceedings and related matters that are infomative to the public consistent with the policy of the Title 5 U.S.C. 552b will be available to the public within fourteen days of the meetings, and are available for public inspection at the Office of Elementary and Secondary Education, U.S. Department of Education, 400 Maryland Avenue, SW, Washington, DC 20202 from the hours of 8:30 a.m. to 5 p.m.

Michael Cohen,

Assistant Secretary, Office of Elementary and Secondary Education.

The National Advisory Council on Indian Education

January 26–27, 2000, The LaQuinta Inn, 2510 W. Greenway Rd., Phoenix, AZ 602–993–0800

Wednesday, January 26, 2000

1:30 p.m.
Roll Call
Introductions
Review Agenda and Purpose of Meeting
2:00–4:00
Presidential Execution Order 13096 on American Indian and Alaska Native Education Update on ESEA Reauthorization
Executive Order Research Agenda
4:00–500
Draft NACIE Charter and Work Plan
Annual Report Review
OIE Staff Updates
5:00 p.m.
Summarize Discussion & Set Agenda for Next Day

Thursday, January 27, 2000

9:00 a.m.
Call of Order
9:15–10:30
Continues Business Meeting
10:30–12:00
Open Meeting On:
Reauthorication of Indian Education Programs
Executive Order 13906
12:00–100
Lunch
1:00–4:00
Open Meeting Continued
4:00–4:30
Summarize Meeting Accomplishments
4:30 p.m.
Adjourn NACIE Meeting

[FR Doc. 00–755 Filed 1–12–00; 8:45 am]

BILLING CODE 4000–01–M

DEPARTMENT OF ENERGY

Floodplain Statement of Findings for the Construction of a Groundwater Interceptor Trench at the Weldon Spring Site

AGENCY: Office of Environmental Management, Department of Energy (DOE).

ACTION: Floodplain Statement of Findings.

SUMMARY: This is a Floodplain Statement of Findings for the Weldon Spring Site prepared in accordance with 10 CFR Part 1022, DOE Floodplain/Wetlands regulations. DOE proposes to construct a groundwater interceptor trench at the Weldon Spring Site, located in St. Charles County, Missouri. The proposed trench would be located within the 100-year floodplain of the Missouri River. DOE prepared a floodplain and wetlands assessment describing the effects, alternatives, and measures designed to avoid or minimize potential harm to or within the affected floodplain. There are no practicable alternatives to locating the action in the floodplain. DOE will allow 15 days of public review after publication of the statement of findings before implementing the proposed action.

FOR FURTHER INFORMATION, CONTACT: Mr. Steve McCracken, Department of Energy, Weldon Spring Site Remedial Action Project, 7295 Highway 94 South, St. Charles, MO 63304, (636) 441–8978.

FOR FURTHER INFORMATION ON GENERAL DOE FLOODPLAIN/WETLANDS ENVIRONMENTAL REVIEW REQUIREMENTS, CONTACT: Carol M. Borgstrom, Director, Office of NEPA Policy and Assistance, EH–42, Department of Energy, 1000 Independence Avenue, SW, Washington, D.C. 20585, (202) 586–4600 or (800) 472–2756.

SUPPLEMENTARY INFORMATION: This Floodplain Statement of Findings for the Weldon Spring Site is prepared in accordance with 10 CFR Part 1022. A Notice of Floodplain and Wetlands Involvement was published in the **Federal Register** on Monday, November 29, 1999, FR Doc. 99–30879, and a floodplain and wetlands assessment was prepared. The Record of Decision for Remedial Action for the Quarry Residuals Operable Unit of the Weldon Spring Site outlined field studies for evaluating the effectiveness of technologies to remediate uranium-impacted groundwater in the vicinity of the Weldon Spring Quarry. The DOE is proposing to construct a groundwater interceptor trench approximately 3.9 m (2.5 miles) southwest of the site within the State of Missouri Weldon Spring Conservation Area. This action is intended to evaluate the effectiveness of remediation through the extraction of contaminated groundwater using a groundwater interceptor trench.

Under this action, the DOE would construct a 550-foot long trench approximately 90 m (300 feet) south of the quarry. The trench would be located between the Katy Trail and Femme Osage Slough, within the State of Missouri Weldon Spring Conservation Area, and approximately 1.4 km (0.88 mile) from the Missouri River. The trench would be backfilled with granular material and will have a compacted clay cap. The groundwater interceptor trench would provide continuous groundwater access for an extraction system. Contaminated groundwater would be removed from the trench and directed to a treatment plant. The trench would be operated up to two years.

This action is proposed to be located in the floodplain because the contaminated groundwater is restricted to a small area between the quarry and the slough. Access to this groundwater by means of a trench is possible only from within the floodplain. Periodic flooding of this area in the past has had no effect on contaminant distribution. The only alternative to the proposed action is no-action. Under the no-action alternative, the trench would not be constructed and no attempt would be made to extract contaminated groundwater from the quarry area. There are no practicable alternatives to locating the action in the floodplain.

The proposed action would conform to applicable federal, state, and local floodplain protection standards. Good engineering practices would be employed to control erosion and sedimentation to downstream surface waters and adjacent floodplain areas. Impacts to the floodplain would be minimized by the avoidance (to the extent practicable) of adjacent floodplain areas. No long-term adverse impacts are anticipated to the 100-year floodplain of the Missouri River. No permanent structures would be constructed as part of the proposed action and the proposed excavation would not adversely impact floodplain storage capacity.

DOE will allow 15 days of public review after publication of the statement

of findings prior to implementing the proposed action.

Issued in Oak Ridge, Tennessee on January 5, 2000.

James L. Elmore,

Alternative Oak Ridge Operations, National Environmental Policy Act, Compliance Officer.

[FR Doc. 00–853 Filed 1–12–00; 8:45 am]

BILLING CODE 6450–01–P

DEPARTMENT OF ENERGY

Golden Field Office; Supplemental Announcement to the Broad Based Solicitation for Financial Assistance Applications Involving Research, Development and Demonstration for the Office of Energy Efficiency and Renewable Energy; University Photovoltaic Research, Education, and Collaboration

AGENCY: U.S. Department of Energy.

ACTION: Supplemental announcement 05 to the broad based solicitation for submission of financial assistance applications involving research, development and demonstration DE–PS36–00GO10482.

SUMMARY: The U.S. Department of Energy (DOE), pursuant to the DOE Financial Assistance Rules, 10 CFR 600.8, is announcing its intention to solicit applications for advancing crystalline silicon solar cell technology through research, education, and collaboration. A financial assistance award issued as a result of this Supplemental Announcement will be a cooperative agreement.

DATES: DOE expects to issue the Supplemental Announcement in late January 2000.

ADDRESSES: Copies of the Supplemental Announcement, once issued, can be obtained from the Golden Field Office Home page at http://www.eren.doe.gov/golden/solicitations.html. It is DOE's intention not to issue hard copies of the Solicitation.

SUPPLEMENTARY INFORMATION: DOE is soliciting Applications from accredited colleges or universities for the advancement of crystalline silicon solar cell technology through research, education, and collaboration. A goal of DOE's National Photovoltaics Program is the advancement of solar photovoltaic energy as a significant electrical energy source for the United States. To achieve this goal, the Department of Energy will support advanced and applied research in crystalline silicon cell technology through a University Research, Education, and Collaboration Program (Program). The Department of Energy has supported crystalline silicon cell research through the Center of Excellence for Photovoltaics Research and Education in Crystalline Silicon Solar Cells at the Georgia Institute of Technology. The purpose of this Supplemental Announcement is to solicit accredited educational institutions to develop a program to further advance crystalline silicon cell technology. The objectives of the University Research, Education, and Collaboration Program are: to advance the state of technology in crystalline silicon solar cells through research and development; to verify advances in crystalline silicon technology through solar cell fabrication and testing; to educate and train undergraduate and graduate students through courses and laboratory experience; and to collaborate with U.S. crystalline cell manufacturers for improving manufacturing processes, product performance, and cost.

Applications under this Supplemental Announcement must demonstrate the capabilities, commitment, and resources necessary to advance crystalline silicon cell technology through research, education, and collaboration. The ability of the Applicant to fabricate high-efficiency cells on commercial silicon substrates, reduce cell processing time, develop low-cost fabrication processes with the potential for high-throughput, and fabricate silicon cells with highly effective bulk and surface passivation will be major factors in selecting an application for award.

Successful Applications must demonstrate technology transfer through collaboration with industry and advance the understanding of crystalline silicon solar technology through education. As part of the proposed Program, Applicants are discouraged from forming exclusive business relationships or collaborative arrangements with any solar cell manufacturer(s). Technical support and assistance will be provided through the Department of Energy's National Laboratories. Therefore, financial support of DOE's National Laboratories through a particular Application will not be considered.

Only Applications from accredited colleges or universities will be considered for an award. Educational organizations are not subject to the eligibility requirements of EPAct. However, to be eligible for award, the project must be determined to be in the economic interest of the United States. (See the Broad Based Solicitation, DE–PS36–00GO10482, Section II.F, EPAct Eligibility Requirements.)

An award under this Supplemental Announcement will be a Cooperative Agreement with a term of up to five years. Subject to funding availability, the total DOE funding anticipated for this Supplemental Announcement is $2,500,000 or $500,000 per year. The DOE anticipates selecting one application for award under this Supplemental Announcement. No cost share is required in order to be considered for an award under this solicitation. However, cost share will be considered in selecting an application for an award. Solicitation Number DE–PS36–00GO10482, in conjunction with Supplemental Announcement 05, will include complete information on the program including technical aspects, funding, application preparation instructions, application evaluation criteria, and other factors that will be considered when selecting projects for funding. Responses to the Supplemental Announcement will be due approximately 60 days following issuance of the Supplemental Announcement.

Questions should be submitted in writing to: Ruth E. Adams, DOE Golden Field Office, 1617 Cole Boulevard, Golden, CO 80401–3393; transmitted via facsimile to Ruth E. Adams at (303) 275–4788; or electronically to ruth__adams@nrel.gov.

FOR FURTHER INFORMATION CONTACT: Ruth E. Adams, Contracting Officer, at 303–275–4722, e-mail ruth__adams@nrel.gov.

Issued in Golden, Colorado, on January 6, 2000.

Jerry L. Zimmer,

Procurement Director.

[FR Doc. 00–856 Filed 1–12–00; 8:45 am]

BILLING CODE 6450–01–P

DEPARTMENT OF ENERGY

Reimbursement for Costs of Remedial Action at Active Uranium and Thorium Processing Sites

AGENCY: Office of Environmental Management, Department of Energy.

ACTION: Notice of the acceptance of claims and the availability of funds for reimbursement.

SUMMARY: This notice announces the Department of Energy's acceptance of claims for reimbursement. Approximately $30 million in funds for fiscal year 2000 are available for reimbursement of certain costs of remedial action at eligible active uranium and thorium processing sites pursuant to Title X of the Energy Policy Act of 1992.

After the payment of fiscal year 2000 funds against outstanding approved claims through fiscal year 1999, there will be remaining unpaid outstanding approved claims. Thus any approved claim amounts for fiscal year 2000 will be added to the outstanding balances and eligible for prorated payment in fiscal year 2001 based on the availability of funds from Congressional appropriations.

Title X establishes additional requirements for the reimbursement of any costs incurred after December 31, 2002. For any such costs to be eligible for reimbursement, a licensee must submit a plan for subsequent remedial action during calendar years 2000 or 2001, and a plan must be approved by the Department no later than the end of calendar year 2002. Because of the advance planning that is part of the Federal budget process, licensees are encouraged to submit their plans for subsequent remedial action in 2000 to assure adequate time for review and approval.

DATES: The Department will process payments of approximately $30 million against outstanding approved claims through fiscal year 1999 by April 28, 2000. The closing date for the submission of claims in fiscal year 2000 is May 1, 2000.

ADDRESSES: Claims should be forwarded by certified or registered mail, return receipt requested, to the U.S. Department of Energy, Albuquerque Operations Office, Environmental Restoration Division, P.O. Box 5400, Albuquerque, NM 87185–5400, or by express mail to the U.S. Department of Energy, Albuquerque Operations Office, Environmental Restoration Division, H and Pennsylvania Streets, Albuquerque, NM 87116. All claims should be addressed to the attention of Mr. James B. Coffey. Two copies of the claim should be included with each submission.

FOR FURTHER INFORMATION CONTACT: Messrs. James Coffey (505–845–4026) or Gil Maldonado (505–845–4035), U.S. Department of Energy, Albuquerque Operations Office, Environmental Restoration Division.

SUPPLEMENTARY INFORMATION: The Department of Energy published a final rule under 10 CFR part 765 in the **Federal Register** on May 23, 1994 (59 FR 26714) to carry out the requirements of Title X of the Energy Policy Act of 1992 (sections 1001–1004 of Pub. L. 102-486, 42 U.S.C. 2296a *et seq.*) and to establish the procedures for eligible licensees to submit claims for reimbursement. Title X requires the Department of Energy to reimburse eligible uranium and thorium licensees for certain costs of decontamination, decommissioning, reclamation, and other remedial action incurred by licensees at active uranium and thorium processing sites to remediate byproduct material generated as an incident of sales to the United States Government. To be reimbursable, costs of remedial action must be for work which is necessary to comply with applicable requirements of the Uranium Mill Tailings Radiation Control Act of 1978 (42 U.S.C. 7901 *et seq.*) or, where appropriate, with requirements established by a state pursuant to a discontinuance agreement under section 274 of the Atomic Energy Act of 1954 (42 U.S.C. 2021). Claims for reimbursement must be supported by reasonable documentation as determined by the Department of Energy in accordance with 10 CFR part 765. Funds for reimbursement will be provided from the Uranium Enrichment Decontamination and Decommissioning Fund established at the United States Department of Treasury pursuant to section 1801 of the Atomic Energy Act of 1954 (42 U.S.C. 2297g). Payment or obligation of funds shall be subject to the requirements of the Anti-Deficiency Act (31 U.S.C. 1341).

Submission and Approval of Plans for Subsequent Remedial Action

This notice also provides a reminder of the requirements for eligibility for reimbursement of costs incurred after December 31, 2002. Section 1001. (b)(1)(B)(ii) of the Energy Policy Act of 1992 directs the Secretary of Energy to place into escrow funds for the reimbursement of costs incurred after December 31, 2002, in accordance with a plan for subsequent decontamination, decommissioning, reclamation, and other remedial action approved by the Secretary. Funds are to be placed into escrow no later than December 31, 2002.

10 CFR 765.30 and 765.31 (59 FR 26730–26731) presents the Department's requirements and procedures for the submission and approval of plans for subsequent remedial action. Plans for subsequent remedial action may be submitted any time after January 1, 2000, but no later than December 31, 2001. Plans must be approved prior to December 31, 2002, to be eligible for reimbursement. Fiscal year 2003, beginning October 1, 2002, will be the last budget year in which funds can be placed into escrow for the reimbursement of subsequent remedial action. Because the Federal budget cycle is nearly three years from the beginning of formulation to end of execution, the Department will have to develop final estimates of the total escrow requirement no later than early calendar year 2001. Therefore, the licensees are encouraged to submit their plans for subsequent remedial action to allow sufficient time for review and approval prior to the formulation of the future years' budget requests.

Authority: Section 1001–1004 of Pub. L. 102–46, 106 Stat. 2776 (42 U.S.C. 2296a *et seq.*).

Issued in Washington, DC on this 7th day of January, 2000.

David E. Mathes,

Leader, Small Sites Closure Office, Albuquerque/Nevada Team, Office of Site Closure.

[FR Doc. 00–854 Filed 1–12–00; 8:45 am]

BILLING CODE 6450–01–P

DEPARTMENT OF ENERGY

Environmental Management Site-Specific Advisory Board, Oak Ridge Reservation

AGENCY: Department of Energy.

ACTION: Notice of open meeting.

SUMMARY: This notice announces a meeting of the Environmental Management Site-specific Advisory Board (EM SSAB) Oak Ridge. The Federal Advisory Committee Act (Pub. L. 92–463, 86 Stat. 770) requires that public notice of these meetings be announced in the **Federal Register**.

DATES: Wednesday, February 2, 2000: 6:00–9:30 p.m.

ADDRESSES: Roane State Community College, 276 Patton Lane, Student Lounge, Harriman, TN.

FOR FURTHER INFORMATION CONTACT: Carol Davis, Federal Coordinator/Ex-Officio Officer, Department of Energy Oak Ridge Operations Office, P.O. Box 2001, EM–90, Oak Ridge, TN 37831, (423) 576–0418.

SUPPLEMENTARY INFORMATION:

Purpose of the Board

The purpose of the Board is to make recommendations to DOE and its regulators in the areas of environmental restoration, waste management, and related activities.

Tentative Agenda

1. ''Watts Bar Fish Consumption Advisory,'' presented a representative from the Tennessee Department of Conservation, Water and Pollution Control Division.

Public Participation

The meeting is open to the public. Written statements may be filed with the Committee either before or after the

meeting. Individuals who wish to make oral statements pertaining to agenda items should contact Carol Davis at the address or telephone number listed above. Requests must be received 5 days prior to the meeting and reasonable provision will be made to include the presentation in the agenda. The Deputy Designated Federal Officer is empowered to conduct the meeting in a fashion that will facilitate the orderly conduct of business. Each individual wishing to make public comment will be provided a maximum of 5 minutes to present their comments at the end of the meeting.

Minutes

Minutes of this meeting will be available for public review and copying at the Department of Energy's Information Resource Center at 105 Broadway, Oak Ridge, TN between 7:30 a.m. and 5:30 p.m. Monday through Friday, or by writing to Carol Davis, Department of Energy Oak Ridge Operations Office, P.O. Box 2001, EM–90, Oak Ridge, TN 37831, or by calling her at (423) 576–0418.

Issued at Washington, DC on January 10, 2000.

Rachel M. Samuel,

Deputy Advisory Committee Management Officer.

[FR Doc. 00–855 Filed 1–12–00; 8:45 am]

BILLING CODE 6450–01–P

DEPARTMENT OF ENERGY

Federal Energy Regulatory Commission

[Docket Nos. CP00–61–000, CP00–62–000, and CP00–63–000]

Central New York Oil and Gas Company, LLC; Notice of Applications

January 7, 2000.

Take notice that on December 30, 1999, Central New York Oil and Gas Company, LLC, (CNYOG) One Leadership Square, 211 North Robinson, Suite 1510, Oklahoma City, Oklahoma 73102–7101, filed an application in Docket No. CP00–63–000 pursuant to Section 7(c) of the Natural Gas Act (NGA) and the optional certificate procedures of Part 157(E) of the Federal Energy Regulatory Commission's (Commission) regulations, for a certificate of public convenience and necessity authorizing the construction and operation of natural gas underground storage facilities. On that same date, CNYOG also filed in Docket No. CP00–61–000 for a blanket certificate of public convenience and necessity authorizing CNYOG to render firm and interruptible storage services on an open access basis pursuant to Part 284(G) of the Commission's regulations at market based rates. CNYOG also filed in Docket No. CP00–62–000 for a blanket certificate of public convenience and necessity authorizing certain facility construction, operation and abandonment under Part 157(F) of the Commission's regulations. The requested authorizations are more fully set forth in the applications which are on file with the Commission and open to public inspection. These applications may also be viewed on the web at http://www.ferc.us/online/rims.htm (call 202–208–2222 for assistance).

CNYOG proposes to develop a high-performance natural gas storage project (Stagecoach Storage Project) with a maximum working gas capacity of approximately 13.6 Bcf at the Stagecoach Gas Field, an existing natural gas producing field located in Tioga County, New York and Bradford County, Pennsylvania. CNYOG states that the Stagecoach Storage Project will initially be interconnected with the pipeline facilities of Tennessee Gas Pipeline Company, and has the potential to be interconnected with at least three other interstate pipelines and a local distribution company located nearby.

CNYOG states that the Stagecoach Storage Project will have an initial working gas capacity of 11.94 Bcf at a reservoir pressure of 2,850 psi, and approximately 13.6 Bcf at a reservoir pressure of 3,250 psi (all assuming a minimum operating pressure of 600 psi). The Stagecoach Storage Project will be capable of supporting withdrawals of up to 500 Mmcf/d and injections of up to 250 Mmcf/d. CNYOG claims the anticipated performance of the Stagecoach Storage Project will far exceed that typical of depleted reservoir facilities located in the Northeast market area. CNYOG further states that the Stagecoach Storage Project will be ideally suited for meeting the rapidly changing demands of the electric generation market that is driving much of the growth in natural gas demand in the Northeast.

CNYOG is seeking authority to charge market-based rates for the storage services it proposes to provide from the Stagecoach Storage Project.

Any questions regarding this application should be directed to Jay C. Jimerson, Central New York Oil and Gas Company, LLC; One Leadership Square, 211 North Robinson, Suite 1510, Oklahoma City, Oklahoma 73102–7101. Telephone: (405) 235–0993; Fax: (405) 235–0992; Email: jimerson@ionet.net.

Any person desiring to be heard or to make any protest with reference to said application should on or before January 28, 2000, file with the Federal Energy Regulatory Commission, 888 First Street NE, Washington, DC 20426, a motion to intervene or protest in accordance with the requirements of the Commission's Rules of Practice and Procedure (18 CFR 385.211 and 385.214) and the regulations under the NGA (18 CFR 157.10). All protests filed with the Commission will be considered by it in determining the appropriate action to be taken but will not serve to make the protestants parties to the proceeding. Any person wishing to become a party in any proceeding must file a motion to intervene in accordance with the Commission's rules.

A person obtaining intervenor status will be placed on the service list maintained by the Secretary of the Commission and will receive copies of all documents issued by the Commission, filed by the applicant, or filed by all other intervenors. An intervenor can file for rehearing of any Commission order and can petition for court review of any such order. However, an intervenor must serve copies of comments or any other filing it makes with the Commission to every other intervenor in the proceeding, as well as filing an original and 14 copies with the Commission.

A person does not have to intervene, however, in order to have comments considered. A person, instead, may submit two copies of such comments to the Secretary of the Commission. Commenters will be placed on the Commission's environmental mailing list, will receive copies of environmental documents, and will be able to participate in meetings associated with the Commission's environmental review process. Commenters will not be required to serve copies of filed documents on all other parties. However, commenters will not receive copies of all documents filed by other parties or issued by the Commission, and will not have the right to seek rehearing or appeal the Commission's final order to a Federal court.

The Commission will consider all comments and concerns equally, whether filed by commenters or those requesting intervenor status.

Take further notice that, pursuant to the authority contained in and subject to the jurisdiction conferred upon the Commission by Sections 7 and 15 of the NGA and the Commission's Rules of Practice and Procedure, a hearing will be held without further notice before the Commission or its designee on this

application if no motion to intervene is filed within the time required herein, if the Commission on its own review of the matter finds that the proposal is required by the public convenience and necessity. If a motion for leave to intervene is timely filed, or if the Commission on its own motion believes that a formal hearing is required, further notice of such hearing will be duly given.

Under the procedure provided for, unless otherwise advised, it will be unnecessary for CNYOG to appear or to be represented at the hearing.

David P. Boergers,

Secretary.

[FR Doc. 00–787 Filed 1–12–00; 8:45 am]

BILLING CODE 6717–01–M

DEPARTMENT OF ENERGY

Federal Energy Regulatory Commission

[Docket No. CP00–64–000]

CNG Transmission Corporation; Notice of Application

January 7, 2000.

Take notice that on December 29, 1999, CNG Transmission Corporation (CNG), 445 West Main Street, Clarksburg, West Virginia 26301, filed in Docket No. CP00–64–000 an application pursuant to Sections 7(c) and 7(b) of the Natural Gas Act for a certificate of public convenience and necessity to construct and operate certain pipeline and compression facilities located in Pennsylvania and New York and approval to abandon a segment of a pipeline located in Pennsylvania, all as more fully set forth in the application which is on file with the Commission and open to public inspection. This filing may be viewed on the web at *http://www.ferc.fed.us/online/rims.htm* (call (202) 208–2222 for assistance).

CNG requests authorization to construct and operate facilities in order to substitute its own transportation capacity for market area service entitlements that CNG currently holds on Tennessee Gas Pipeline Company (Tennessee) pursuant to Contract No. 3919. Specifically, CNG requests authorization to: (1) Construct 13 miles of 30-inch pipeline, known as TL 474x2, to loop CNG's existing pipeline in Armstrong County, Pennsylvania; (2) install 4.450 horsepower (hp) of additional compression at Punxsutawney Station in Jefferson County, Pennsylvania; (3) install 2,400 hp of additional compression at Ardell Station in Elk County, Pennsylvania; (4) install 6,400 hp of compression at a new station, Little Greenlick Relay Station, in Potter County, Pennsylvania; (5) install 7,000 hp of compression at a new station site, Brookman Corners Station, in Montgomery County, New York; and (6) construct 800 feet of 30-inch pipeline, known as the Connector Line (TL–510), between TL–474x2 and LN–26 and LN–380 in Armstrong County, Pennsylvania.

CNG estimates the cost of the proposed project to be $63.5 million and will be financed through funds on hand or funds obtained from CNG's parent, Consolidated Natural Gas Company.

CNG also requests permission to abandon in place 12.9 miles of 12-inch pipeline in Armstrong County, Pennsylvania known as LN–9 and physically remove 700 feet of that line.

CNG states that as part of CNG's Order No. 636 restructuring settlement, CNG agreed to assign its upstream capacity on Tennessee from the production area to a Zone 3 transfer point, while retaining the capacity from the transfer point to delivery points interconnecting with CNG in Tennessee Zones 4 and 5. It is stated that as part of their conversion from firm sales to firm transportation service, CNG's converting sales service customers received assignment of CNG's capacity on Tennessee from the Gulf to Physical points in Zones 3 and to the transfer point, which is referred to as south Webster. It is further stated that under Tennessee's Contract No. 3919, dated October 1, 1993, CNG retained firm transportation capacity on Tennessee from South Webster downstream to the Zone 4 and Zone 5 delivery points to facilitate dispatching and no-notice service to CNG's customers.

CNG states that in order for Tennessee to preserve revenue neutrality, the upstream contract that feeds the CNG/Tennessee Contract No. 3919 must match exactly the maximum daily quantity of the downstream contract. It is stated that if a mismatch occurs, any such quantities on Contract No. 3919 will be priced to CNG at Tennessee's maximum tariff rates for FT–A services. Therefore, as CNG's assignees have elected to turn back upstream Tennessee capacity, CNG's costs would necessarily go up unless CNG chooses to turn back a like quantity of service downstream of South Webster.

It is stated that CNG and its customers have determined that CNG must take action to prevent the precipitous cost increase to its customers that would result from renewing the downstream Tennessee contract without corresponding upstream renewals. Therefore, in Docket No. CP00–64–000, CNG proposes to build facilities to enable it to serve its existing market without having to rely on Tennessee for the traditional looping service provided under this contract. Thus, CNG maintains that its customers will avoid the anticipated Tennessee cost increase that will result if CNG renews the contract at Tennessee's maximum rates.

Any questions regarding the application should be directed to Sean R. Sleigh, Manager of Certificates at (304) 623–8462, CNG Transmission Corporation, 445 West Main Street, Clarksburg, West Virginia 26301.

Any person desiring to be heard or to make any protest with reference to said application should on or before January 28, 2000, file with the Federal Energy Regulatory Commission, 888 First Street, NE, Washington, DC 20426, a motion to intervene or a protest in accordance with the requirements of the Commission's Rules of Practice and Procedure (18 CFR 385.214 or 385.211) and the Regulations under the Natural Gas Act (18 CFR 157.10). All Protests filed with the Commission will be considered by it in determining the appropriate action to be taken but will not serve to make the protestants parties to the proceedings. Any person wishing to become a party to a proceeding or to participate as a party in any hearing therein must file a motion to intervene in accordance with the Commission's Rules.

Take further notice that, pursuant to the authority contained in and subject to the jurisdiction conferred upon the Federal Energy Regulatory Commission by Sections 7 and 15 of the Natural Gas Act and the Commission's Rules of Practice and Procedure, a hearing will be held without further notice before the Commission or its designee on this application if no motion to intervene is filed within the time required herein, if the Commission on its own review of the matter finds that a grant of the certificate and permission and approval for the proposed abandonment are required by the public convenience and necessity. If a motion for leave to intervene is timely filed, or if the Commission on its own motion believes that a formal hearing is required, further notice of such hearing will be duly given.

Under the procedure herein provided for, unless otherwise advised, it will be unnecessary for CNG to appeal or be represented at the hearing.

David P. Boergers,

Secretary.

[FR Doc. 00–788 Filed 1–12–00; 8:45 am]

BILLING CODE 6717–01–M

DEPARTMENT OF ENERGY

Federal Energy Regulatory Commission

[Docket No. CP00–58–000]

Columbia Gas Transmission Corporation; Notice of Application for Abandonment Authorization

January 7, 2000.

Take notice that on December 22, 1999, Columbia Gas Transmission Corporation (Columbia), a Delaware corporation, whose main office is located at 12801 Fair Lakes Parkway, Fairfax, Virginia 22030–0146, filed in the referenced docket pursuant to Section 7(b) of the Natural Gas Act (NGA) and Part 157 of the Federal Energy Regulatory Commission's (the Commission) Regulations thereunder (18 CFR 157.7 and 157.18), an application for authority to abandon by sale to Columbia Natural Resources (CNR), the Cleveland Storage Field (Cleveland Storage) located in Randolph, Upshur and Webster Counties, West Virginia, and all as more fully set forth in the Application on file with the Commission and open to public inspection. This filing may be viewed on the web at *http://www.ferc.us/online/rims.htm* (call 202–208–2222).

Specifically, Columbia proposes to abandon and sell to CNR its Cleveland Storage, consisting of 8.1 miles of storage pipeline, 9 active storage wells, 8 observation wells and ancillary facilities for $525,000. CNR proposes to use the Cleveland Storage as a production facility.

Columbia is seeking to abandon Cleveland Storage after having observed a significant deterioration in the performance and geologic integrity of the reservoir. Columbia states that it will rely upon its retained storage capacity to offset the reduction in working gas capacity and deliverability associated with the abandonment, which is expected to have only a 0.01% effect on Columbia's overall 4.4 Bcf design day deliverability from Columbia's other active storage fields.

In addition, Columbia seeks authority to sell 830 MMcf of base gas that was previously withdrawn from Cleveland Storage between 1996 and 1999 during Columbia's integrity and performance assessment of the field. The disposition of proceeds from the proposed sale of this base gas will be made pursuant to Section C, of Article IV, of Stipulation II of the Settlement in Docket No. RP95–408, *Columbia Gas Transmission Corp.*, 79 FERC ¶§ 61,044 (1997). Columbia states that this settlement defines future additional sales of base gas no longer needed by Columbia as a result of more efficient operation of its storage fields. Columbia will comply with the annual reporting requirements provided for in Section D of Article IV.

Any person desiring to be heard or to make any protest with reference to said application should on or before January 28, 2000, file with the Federal Energy Regulatory Commission, 888 First Street, NE, Washington, DC 20426, a motion to intervene or a protest in accordance with the requirements of the Commission's Rules of Practice and Procedure (18 CFR 385.211 or 385–214) and the Regulations under the Natural Gas Act (18 CFR 157.10). All protests filed with the Commission will be considered by it in determining the appropriate action to be taken, but will not serve to make protestants parties to the proceedings. Any person wishing to become a party to a proceeding or to participate as a party in any hearing therein must file a motion to intervene in accordance with the Commission's Rules.

Take further notice that, pursuant to the authority contained in and subject to the jurisdiction conferred upon the Federal Energy Regulatory Commission by Sections 7 and 15 of the Natural Gas Act and Commission's Rules of Practice and Procedure, a hearing will be held without further notice before the Commission or its designee on this application if no motion to intervene is filed within the time required herein, if the Commission on its own review of the matter finds that a grant of the certificate is required by the public convenience and necessity. If a motion for leave to intervene is timely filed, or if the Commission on its own motion believes that a formal hearing is required, further notice of such hearing will be duly given.

Under the procedure herein provided for, unless otherwise advised, it will be unnecessary for Columbia to appear or be represented at the hearing.

Linwood A. Watson, Jr.,

Acting Secretary.

[FR Doc. 00–786 Filed 1–12–00; 8:45 am]

BILLING CODE 6717–01–M

DEPARTMENT OF ENERGY

Federal Energy Regulatory Commission

[Docket No. MT00–2–000]

Dauphin Island Gathering Partners; Notice of Proposed Changes in FERC Gas Tariff

January 7, 2000.

Take notice that on December 20, 1999, Dauphin Island Gathering Partners (DIGP) tendered for filing as part of its FERC Gas Tariff, First Revised Volume No. 1, First Revised Sheet No. 243, with an effective date of September 1, 1999.

DIGP states that the above listed tariff sheets is being filed to make the language in DIGP's tariff consistent with DIGP's Statement of Standards of Conduct filed on September 2, 1999, to reflect that DIGP has one marketing affiliate. DIGP also states that DIGP and its marketing affiliate function independently of each other. DIGP does not share any facilities or operating personnel with its marketing affiliate.

DIGP states that copies of the filing were served on all firm customers of DIGP and interested state commissions.

Any person desiring to be heard or to protest must file a motion to intervene or a protest with the Federal Energy Regulatory Commission, 888 First Street, NE, Washington, DC 20426, in accordance with Sections 385.214 or 385.211 of the Commission's Rules and Regulations. All such motions or protests were due in accordance with Section 154.210 of the Commission's Regulations. Protests will be considered by the Commission in determining the appropriate action to be taken, but will not serve to make protestants parties to the proceedings. To become a party a person must file a motion to intervene. Copies of this filing are on file with the Commission and are available for public inspection in the Public Reference Room. This filing may be viewed on the web at http://www.ferc.fed.us/online/rims.htm (call 202–208–2222 for assistance).

David P. Boergers,

Secretary.

[FR Doc. 00–790 Filed 1–12–00; 8:45 am]

BILLING CODE 6717–01–M

DEPARTMENT OF ENERGY

Federal Energy Regulatory Commission

[Docket No. RP00–160–000]

Eastern Shore Natural Gas Company; Notice of Proposed Changes in FERC Gas Tariff

January 7, 2000.

Take notice that on January 5, 2000, Eastern Shore Natural Gas Company (ESNG) tendered for filing as part of its FERC Gas Tariff, Second Revised Volume No. 1, certain revised tariff sheets in the above captioned docket bear a proposed effective date of February 1, 2000.

ESNG states that the purpose of this instant filing is to track rate changes attributable to a storage service purchased from Columbia Gas Transmission Corporation (Columbia) under its Rate Schedules FSS and SST. The costs of the above referenced storage service comprise the rates and charges payable under ESNG's Rate Schedule CFSS. This tracking filing is being made pursuant to section 3 of ESNG's Rate Schedule CFSS.

ESNG states that copies of the filing have been served upon its jurisdictional customers and interested State Commissions.

Any person desiring to be heard or to protest said filing should file a motion to intervene or a protest with the Federal Energy Regulatory Commission, 888 First Street, NE., Washington, DC 20426, in accordance with sections 385.214 or 385.211 of the Commission's Rules and Regulations. All such motions or protests must be filed in accordance with section 154.210 of the Commission's Regulations. Protests will be considered by the Commission in determining the appropriate action to be taken, but will not serve to make protestants parties to the proceedings. Any person wishing to become a party must file a motion to intervene. Copies of this filing are on file with the Commission and are available for public inspection in the Public Reference Room. This filing may be viewed on the web at http://www.ferc.fed.us/online/rims.htm (call 202–208–2222 for assistance).

David P. Boergers,

Secretary.

[FR Doc. 00–791 Filed 1–12–00; 8:45 am]

BILLING CODE 6717–01–M

DEPARTMENT OF ENERGY

Federal Energy Regulatory Commission

[Project No. 1962–000]

Pacific Gas & Electric Company; Notice of Meeting

January 7, 2000.

Take notice that there will be a full group meeting of the Rock Creek-Cresta Collaborative on Thursday, February 3, 2000, from 9 a.m. to 4 p.m. at the PG&E offices, 2740 Gateway Oaks Drive, in Sacramento, California. Expected participants need to give their names to William Zemke (PG&E) at (415) 973–1646 so that they can get through security.

For further information, please contact Elizabeth Molloy at (202) 208–0771.

David P. Boergers,

Secretary.

[FR Doc. 00–792 Filed 1–12–00; 8:45 am]

BILLING CODE 6717–01–M

DEPARTMENT OF ENERGY

Federal Energy Regulatory Commission

[Docket No. CP00–65–000]

Tennessee Gas Pipeline Company; Notice of Application

January 7, 2000.

Take notice that on December 30, 1999, Tennessee Gas Pipeline Company (Tennessee), 1001 Louisiana, Houston, Texas 77002, filed an application in Docket No. CP00–65–000 pursuant to Section 7(b) and 7(c) of the Natural Gas Act (NGA) and Part 157 of the Federal Energy Regulatory Commission's (Commission) Regulations requesting a certificate of public convenience and necessity to construct, install and operate a lateral pipeline (the Stagecoach Lateral) and other appurtenant facilities, all as more fully set forth in the application which is on file with the Commission and open to public inspection. This application may also be viewed on the web at http://www.ferc.us/online/rims.htm (call 202–208–2222 for assistance).

Specifically, Tennessee proposes to construct, install and operate the following pipeline facilities:

- Approximately 23.7 miles of 30-inch diameter lateral pipeline with associated appurtenance extending from an interconnecting point with Tennessee's mainline system at Station 319 in Susquehanna County, Pennsylvania northward to Central New York Oil and Gas Company's proposed Stagecoach Storage Field in Tioga County, New York;
- Approximately 3.9 miles of 30-inch diameter pipeline loop on Tennessee's 300-Line in Susquehanna County, Pennsylvania;
- A new Compressor Station 323 with 14,550 hp of compression on the 300-Line in Pike County, Pennsylvania;
- Replacement of approximately 6.5 miles of 24-inch diameter pipeline and uprate of pipeline on the 300-Line in Pike County, Pennsylvania and Sussex, Passaic, Rockland, and Weschester Counties, New Jersey..

Tennessee states that Central New York Oil and Gas Company, LLC (CNYOG) intends to file for a certificate of public convenience and necessity to construct a high deliverability underground natural gas storage facility and related pipeline and compressor facilities known as the Stagecoach Storage Field in Tioga County, New York. Tennessee further states that Tennessee's instant proposal is related to CNYOG's application in that Tennessee seeks authorization to construct, install and operate a lateral pipeline to connect the Field to the natural gas interstate pipeline grid and to provide related transportation services.

Any questions regarding this application should be directed to David E. Maranville, Counsel, P.O. Box 2511, Houston, Texas 77252. Voice: (713) 420–3525, Fax: (713) 420–7025.

Any person desiring to be heard or to make any protest with reference to said application should on or before January 28, 2000, file with the Federal Energy Regulatory Commission, 888 First Street NE, Washington, DC 20426, a motion to intervene or protest in accordance with the requirements of the Commission's Rules of Practice and Procedure (18 CFR 385.211 and 385.214) and the regulations under the NGA (18 CFR 157.10). All protests filed with the Commission will be considered by it in determining the appropriate action to be taken but will not serve to make the protestants parties to the proceeding. Any person wishing to become a party in any proceeding must file a motion to intervene in accordance with the Commission's rules.

A person obtaining intervenor status will be placed on the service list maintained by the Secretary of the Commission and will receive copies of all documents issued by the Commission, filed by the applicant, or filed by all other intevenors. An intervenor can file for rehearing of any Commission order and can petition for court review of any such order.

However, an intervenor must serve copies of comments or any other filing it makes with the Commission to every other intervenor in the proceeding, as well as filing an original and 14 copies with the Commission.

A person does not have to intervene, however, in order to have comments considered. A person, instead, may submit two copies of such comments to the Secretary of the Commission. Commenters will be placed on the Commission's environmental mailing list, will receive copies of environmental documents, and will be able to participate in meetings associated with the Commission's environmental review process. Commenters will not be required to serve copies of filed documents on all other parties. However, commenters will not receive copies of all documents filed by other parties or issued by the Commission, and will not have the right to seek rehearing or appeal the Commission's final order to a Federal court.

The Commission will consider all comments and concerns equally, whether filed by commenters or those requesting intervenor status.

Take further notice that, pursuant to the authority contained in and subject to the jurisdiction conferred upon the Commission by Sections 7 and 15 of the NGA and the Commission's Rules of Practice and Procedure, a hearing will be held without further notice before the Commission or its designee on this application if no motion to intervene is filed within the time required herein, if the Commission on its own review of the matter finds that the proposal is required by the public convenience and necessity. If a motion for leave to intervene is timely filed, or if the Commission on its own motion believes that a formal hearing is required, further notice of such hearing will be duly given.

Under the procedure provided for, unless otherwise advised, it will be unnecessary for Tennessee to appear or to be represented at the hearing.

David P. Boergers,

Secretary.

[FR Doc. 00–789 Filed 1–12–00; 8:45 am]

BILLING CODE 6717–01–M

DEPARTMENT OF ENERGY

Federal Energy Regulatory Commission

[Docket No. EG00–75–000, et al.]

La Paloma Generating Trust Ltd., et al.; Electric Rate and Corporate Regulation Filings

January 7, 2000.

Take notice that the following filings have been made with the Commission:

1. La Paloma Generating Trust Ltd.

[Docket No. EG00–75–000]

Take notice that on January 6, 2000, La Paloma Generating Trust Ltd., a Delaware business trust with its principal place of business at 1100 North Market Street, Wilmington, Delaware, filed with the Federal Energy Regulatory Commission an application for determination of exempt wholesale generator status pursuant to Part 365 of the Commission's regulations.

La Paloma Generating Trust Ltd. proposed to own a nominally rate approximately 1,040 MW natural gas-fired, combined cycle power plant near the town of McKittrick, California. La Paloma Generating Trust Ltd. will lease the facility to La Paloma Generating Company, LLC (LPGC). The proposed power plant is expected to commence commercial operation beginning in the winter of 2001. All capacity and energy from the plant will be sold exclusively at wholesale by LPGC.

Comment date: January 28, 2000, in accordance with Standard Paragraph E at the end of this notice. The Commission will limit its consideration of comments to those that concern the adequacy or accuracy of the application.

2. Public Service Company of Colorado

[Docket No. EL00–32–000]

Take notice that on January 5, 2000, Public Service Company of Colorado (PS Colorado) filed a petition for a declaratory order requesting the Commission to find that prudent costs PS Colorado intends to incur related to pollution control measures undertaken in accordance with state law are recoverable in rates for wholesale power service.

Comment date: January 25, 2000, in accordance with Standard Paragraph E at the end of this notice.

3. Cogentrix Energy Power Marketing, Inc.; Fortistar Power Marketing LLC

[Docket Nos. ER95–1739–017 and ER98–3393–004]

Take notice that on December 29, 1999, the above-mentioned power marketers filed quarterly reports with the Commission in the above-mentioned proceedings for information only.

4. Zapco Power Marketers, Inc.; NAP Trading and Marketing, Inc.

[Docket Nos. ER98–689–007 and ER95–1278–013]

Take notice that on January 3, 2000, the above-mentioned power marketers filed quarterly reports with the Commission in the above-mentioned proceedings for information only.

5. MEG Marketing, LLC

[Docket No. ER98–2284–007]

Take notice that on December 30, 1999, MEG Marketing, LLC filed their quarterly report for the quarter ending December 31, 1999, for information only.

6. Northern States Power Company (Minnesota)

[Docket No. ER00–772–000]

Take notice that on December 30, 1999, Northern States Power Company (Minnesota) (NSP), tendered for filing notice that NSP has now elected to withdraw its Black Dog Generation Repowering Interconnection Study Agreement filed with the Commission on December 10, 1999, pursuant to Section 385.216(a) of the Commission's Regulations.

Copies of the NSP withdrawal notice are on file with the Commission and are available for public inspection.

Comment date: January 19, 2000, in accordance with Standard Paragraph E at the end of this notice.

7. California Power Exchange Corporation

[Docket No. ER00–850–000]

Take notice that on December 20, 1999, California Power Exchange Corporation (CalPX), tendered for filing information regarding CalPX's budgeted cost for calendar year 2000 and the resulting charges derived from the formula rates contained in Schedule 1 of CalPX's FERC Electric Service Tariff No. 2.

Comment date: January 18, 2000, in accordance with Standard Paragraph E at the end of this notice.

8. PEC Energy Marketing, Inc.; SkyGen Energy Marketing L.L.C.; DePere Energy Marketing, Inc.

[Docket Nos. ER00–990–000; ER00–991–000; and ER00–992–000]

Take notice that on January 3, 2000, the above-mentioned affiliated power producers and/or public utilities filed their quarterly reports for the quarter ending September 30, 1999.

Comment date: January 27, 2000, in accordance with Standard Paragraph E at the end of this notice.

9. Avista Corporation

[Docket No. ER00–993–000]

Take notice that on January 4, 2000, Avista Corporation tendered for filing with the Federal Energy Regulatory Commission (FERC) pursuant to Section 35.12 of the Commission's rules (18 CFR 35.12), an executed Service Agreement under Avista Corporation's FERC Electric Tariff First Revised Volume No. 9, with Koch Energy Trading, Inc., which replaces an unexecuted Service Agreement previously filed with the Commission under Docket No. ER97–1252–000, SA No. 82, effective December 15, 1996.

Notice of the filing has been served upon the following: Ms Diana Heinrich, Koch Energy Trading, Inc, Contract Analyst, Koch Legal Services, 20 E. Greenway Plaza, 5th Floor, Houston, Texas 77046.

Comment date: January 24, 2000, in accordance with Standard Paragraph E at the end of this notice.

10. PSEG Power New York Inc.; PSEG Energy Resources & Trade L.L.C.

[Docket No. ER00–994–000]

Take notice that on January 4, 2000, PSEG Power New York Inc. (PSEG Power New York) and PSEG Energy Resources & Trade L.L.C. (ER&T) of Newark, New Jersey tendered for filing pursuant to Section 205 of the Federal Power Act (FPA), 16 U.S.C. § 824d (1994), and Part 35 of the Federal Energy Regulatory Commission's (Commission) Regulations (18 CFR Part 35), an unexecuted power purchase agreement. The power purchase agreement provides for the long-term sale of electric capacity, energy and ancillary services generated by the Albany Steam Station, located in the Town of Bethlehem, NY, by PSEG Power New York to ER&T.

PSE&G further requests waiver of the Commission's regulations such that the agreement can be made effective as of the later of March 1, 2000 or the date of closing of the underlying sale of the Albany Steam Station from Niagara Mohawk Power Corporation to PSEG Power New York.

Copies of the filing have been served upon the New York State Public Utility Commission.

Comment date: January 24, 2000, in accordance with Standard Paragraph E at the end of this notice.

11. Alliant Energy Corporate Services, Inc.

[Docket No. ER00–995–000]

Take notice that on January 4, 2000, Alliant Energy Corporate Services, Inc. (Alliant Energy) on behalf of Interstate Power Company (IPC) and Wisconsin Power & Light (WPL) tendered for filing a Capacity Transaction (Agreement) between IPC and IES for the period December 1, 1999 through February 29, 2000. The Agreement was negotiated to provide service under the Alliant Energy System Coordination and Operating Agreement among IES Utilities Inc., Interstate Power Company, Wisconsin Power & Light Company and Alliant Energy.

Comment date: January 24, 2000, in accordance with Standard Paragraph E at the end of this notice.

12. Minnesota Power, Inc.

[Docket No. ER00–998–000]

Take notice that on January 4, 2000, Minnesota Power, Inc., f/k/a Minnesota Power & Light Company, tendered for filing Notice of Cancellation of its Integrated Transmission Agreement with United Power Association.

Comment date: January 24, 2000, in accordance with Standard Paragraph E at the end of this notice.

13. New York State Electric & Gas Corporation

[Docket No. ER00–999–000]

Take notice that on January 4, 2000, New York State Electric & Gas Corporation (NYSEG) tendered for filing a fully executed service agreement (Service Agreement) between NYSEG and Edison Mission Marketing & Trading, Inc. (EMMT) pursuant to Section 35.13 of the Commission's Regulations, 18 CFR 35.13. NYSEG originally filed a partially executed Service Agreement with the Commission on June 18, 1999 pursuant to Part 35 of the Commission's Regulations, 18 CFR Part 35 and the Commission granted the Service Agreement an effective date of May 3, 1999. Under the Service Agreement NYSEG may provide capacity and/or energy to EMMT in accordance with NYSEG's FERC Electric Tariff, Original Volume No. 3.

NYSEG has requested that the Commission accept the fully executed Service Agreement and that the Service Agreement remain effective as of May 3, 1999.

NYSEG has served a copy of this filing upon the New York State Public Service Commission and EMMT.

Comment date: January 24, 2000, in accordance with Standard Paragraph E at the end of this notice.

14. Northern Indiana Public Service Company

[Docket No. ER00–1000–000]

Take notice that on January 4, 2000, Northern Indiana Public Service Company tendered for filing an executed Standard Transmission Service Agreement for Non-Firm Point-to-Point Transmission Service between Northern Indiana Public Service Company and Consumers Energy Company (Transmission Customer).

Under the Transmission Service Agreement, Northern Indiana Public Service Company will provide Point-to-Point Transmission Service to Transmission Customer pursuant to the Transmission Service Tariff filed by Northern Indiana Public Service Company in Docket No. OA96–47–000 and allowed to become effective by the Commission. Northern Indiana Public Service Company has requested that the Service Agreement be allowed to become effective as of February 1, 2000.

Copies of this filing have been sent to the Indiana Utility Regulatory Commission and the Indiana Office of Utility Consumer Counselor.

Comment date: January 24, 2000, in accordance with Standard Paragraph E at the end of this notice.

15. Bay State GPE, Inc.

[Docket No. ER00–1001–000]

Take notice that on January 4, 2000, Bay State GPE, Inc. filed their quarterly report for the quarter ending September 30, 1999.

Comment date: January 27, 2000, in accordance with Standard Paragraph E at the end of this notice.

16. United American Energy Corp.; Boralex Stratton Energy, Inc.

[Docket Nos. ER00–1006–000 and ER00–1013–000]

Take notice that on January 5, 2000, the above-mentioned affiliated power producers and/or public utilities filed their quarterly reports for the quarter ending December 31, 1999.

Comment date: January 27, 2000, in accordance with Standard Paragraph E at the end of this notice.

17. Rochester Gas and Electric Corporation

[Docket No. ER00–1019–000]

Take notice that on December 30, 1999, Rochester Gas and Electric Corporation filed a supplemental Notice of Cancellation of Point to Point Service Agreements. The transmission

customers are listed in an attachment to the filing.

RG&E requests waiver of the Commission's notice requirements, expedited resolution, and that the cancellation be made effective as of December 2, 1999.

RG&E has served copies of the filing on the New York State Public Service Commission and the transmission customers listed in the attachment to the filing.

Comment date: January 19, 2000, in accordance with Standard Paragraph E at the end of this notice.

18. California Independent System Operator Corporation

[Docket No. ES00–12–000]

Take notice that on December 30, 1999, the California Independent System Operator Corporation (ISO) tendered for filing an Application for Authorization Under Section 204 of the Federal Power Act to Issue Securities. The ISO requests authorization to issue bonds in an amount not to exceed $295,000,000. The ISO also requests it be granted an exemption from the Commission's competitive bidding and negotiated placement requirements of 18 CFR 34.2.

Comment date: January 27, 2000, in accordance with Standard Paragraph E at the end of this notice.

Standard Paragraphs

E. Any person desiring to be heard or to protest such filing should file a motion to intervene or protest with the Federal Energy Regulatory Commission, 888 First Street, N.E., Washington, D.C. 20426, in accordance with Rules 211 and 214 of the Commission's Rules of Practice and Procedure (18 CFR 385.211 and 385.214). All such motions or protests should be filed on or before the comment date. Protests will be considered by the Commission in determining the appropriate action to be taken, but will not serve to make protestants parties to the proceeding. Any person wishing to become a party must file a motion to intervene. Copies of these filings are on file with the Commission and are available for public inspection. This filing may also be viewed on the Internet at http://www.ferc.fed.us/ online/rims.htm (call 202–208–2222 for assistance).

David P. Boergers,

Secretary.

[FR Doc. 00–815 Filed 1–12–00; 8:45 am]

BILLING CODE 6717–01–P

DEPARTMENT OF ENERGY

Federal Energy Regulatory Commission

[Docket No. EG00–62–000, et al.]

Lake Worth Generation L.L.C., et al.; Electric Rate and Corporate Regulation Filings

January 5, 2000.

Take notice that the following filings have been made with the Commission:

1. Lake Worth Generation L.L.C.

[Docket No. EG00–62–000]

Take notice that on December 29, 1999, Lake Worth Generation L.L.C. (LWG), with its principal office c/o Thermo Ecotek Corporation, 245 Winter Street, Waltham, MA 02154, filed with the Commission an application for determination of exempt wholesale generator status pursuant to Part 365 of the Commission's regulations.

LWG states that it is a limited liability company organized under the laws of the State of Delaware. LWG will be engaged directly and exclusively in the business of owning and operating an approximately 217.5 MW electric generating facility located at 117 College Street, Lake Worth, Florida. Electric energy produced by the facility will be sold at wholesale.

Comment date: January 26, 2000, in accordance with Standard Paragraph E at the end of this notice. The Commission will limit its consideration of comments to those that concern the adequacy or accuracy of the application.

2. Montana OL1 L.L.C.

[Docket No. EG00–65–000]

Take notice that on December 30, 1999, Montana OL1 L.L.C. (the Applicant) filed with the Federal Energy Regulatory Commission an application for determination of exempt wholesale generator status pursuant to Part 365 of the Commission's regulations.

The Applicant is a Delaware limited liability company which has been formed to purchase an undivided interest in the Colstrip Project, an approximately 2276 megawatt four unit, coal-fired steam electric generating complex located near Colstrip, Rosebud County, Montana.

Comment date: January 26, 2000, in accordance with Standard Paragraph E at the end of this notice. The commission will limit its consideration of comments to those that concern the adequacy or accuracy.

3. Montana OP1 L.L.C.

[Docket No. EG00–66–000]

Take notice that on December 30, 1999, Montana OP1 L.L.C. (the Applicant) filed with the Federal Energy Regulatory Commission an application for determination of exempt wholesale generator status pursuant to Part 365 of the Commission's regulations.

The Applicant is a Delaware limited liability company which has been formed to hold the sole membership interest in Montana OL1 L.L.C., a Delaware limited liability company formed to purchase an undivided interest in the Colstrip Project, an approximately 2276 megawatt four unit, coal-fired steam electric generating complex located near Colstrip, Rosebud County, Montana.

Comment date: January 26, 2000, in accordance with Standard Paragraph E at the end of this notice. The Commission will limit its consideration of comments to those that concern the adequacy or accuracy of the application.

4. Montana OL3 L.L.C.

[Docket No. EG00–67–000]

Take notice that on December 30, 1999, Montana OL3 L.L.C. (the Applicant) filed with the Federal Energy Regulatory Commission an application for determination of exempt wholesale generator status pursuant to Part 365 of the Commission's regulations.

The Applicant is a Delaware limited liability company which has been formed to purchase an undivided interest in the Colstrip Project, an approximately 2276 megawatt four unit, coal-fired steam electric generating complex located near Colstrip, Rosebud County, Montana.

Comment date: January 26, 2000, in accordance with Standard Paragraph E at the end of this notice. The commission will limit its consideration of comments to those that concern the adequacy or accuracy of the application.

5. Montana OL2 L.L.C.

[Docket No. EG00–68–000]

Take notice that on December 30, 1999, Montana OL2 L.L.C. (the Applicant) filed with the Federal Energy Regulatory Commission an application for determination of exempt wholesale generator status pursuant to Part 365 of the Commission's regulations.

The Applicant is a Delaware limited liability company which has been formed to purchase an undivided interest in the Colstrip Project, an approximately 2276 megawatt four unit, coal-fired steam electric generating complex located near Colstrip, Rosebud County, Montana.

Comment date: January 26, 2000, in accordance with Standard Paragraph E at the end of this notice. The Commission will limit its consideration of comments to those that concern the adequacy or accuracy of the application.

6. Montana OP4 L.L.C.

[Docket No. EG00–69–000]

Take notice that on December 30, 1999, Montana OP4 L.L.C. (the Applicant) filed with the Federal Energy Regulatory Commission an application for determination of exempt wholesale generator status pursuant to Part 365 of the Commission's regulations.

The Applicant is a Delaware limited liability company which has been formed to hold the sole membership interest in Montana OL4 L.L.C., a Delaware limited liability company formed to purchase an undivided interest in the Colstrip Project, an approximately 2276 megawatt four unit, coal-fired steam electric generating complex located near Colstrip, Rosebud County, Montana.

Comment date: January 26, 2000, in accordance with Standard Paragraph E at the end of this notice. The Commission will limit its consideration of comments to those that concern the adequacy or accuracy of the application.

7. Montana OL4 L.L.C.

[Docket No. EG00–70–000]

Take notice that on December 30, 1999, Montana OL4 L.L.C. (the Applicant) filed with the Federal Energy Regulatory Commission an application for determination of exempt wholesale generator status pursuant to Part 365 of the Commission's regulations.

The Applicant is a Delaware limited liability company which has been formed to purchase an undivided interest in the Colstrip Project, an approximately 2276 megawatt four unit, coal-fired steam electric generating complex located near Colstrip, Rosebud County, Montana.

Comment date: January 26, 2000, in accordance with Standard Paragraph E at the end of this notice. The Commission will limit its consideration of comments to those that concern the adequacy or accuracy of the application.

8. Montana OP3 L.L.C.

[Docket No. EG00–71–000]

Take notice that on December 30, 1999, Montana OP3 L.L.C. (the Applicant) filed with the Federal Energy Regulatory Commission an application for determination of exempt wholesale generator status pursuant to Part 365 of the Commission's regulations.

The Applicant is a Delaware limited liability company which has been formed to hold the sole membership interest in Montana OL3 L.L.C., a Delaware limited liability company formed to purchase an undivided interest in the Colstrip Project, an approximately 2276 megawatt four unit, coal-fired steam electric generating complex located near Colstrip, Rosebud County, Montana.

Comment date: January 26, 2000, in accordance with Standard Paragraph E at the end of this notice. The commission will limit its consideration of comments to those that concern the adequacy or accuracy of the application.

9. Montana OP2 L.L.C.

[Docket No. EG00–72–000]

Take notice that on December 30, 1999, Montana OP2 L.L.C. (the Applicant) filed with the Federal Energy Regulatory Commission an application for determination of exempt wholesale generator status pursuant to Part 365 of the Commission's regulations.

The Applicant is a Delaware limited liability company which has been formed to hold the sole membership interest in Montana OL2 L.L.C., a Delaware limited liability company formed to purchase an undivided interest in the Colstrip Project, an approximately 2276 megawatt four unit, coal-fired steam electric generating complex located near Colstrip, Rosebud County, Montana.

Comment date: January 26, 2000, in accordance with Standard Paragraph E at the end of this notice. The Commission will limit its consideration of comments to those that concern the adequacy or accuracy of the application.

10. Duke Energy Hidalgo, L.P.

[Docket No. EG00–73–000]

Take notice that on December 30, 1999, Duke Energy Hidalgo, L.P. (Duke Energy Hidalgo) filed with the Federal Energy Regulatory Commission (Commission) an application for determination of exempt wholesale generator status pursuant to Part 365 of the Commission's regulations.

Duke Energy Hidalgo is a Texas limited partnership and an indirect wholly-owned subsidiary of Duke Energy Corporation. Duke Energy Hidalgo's facility will be a natural gas-fired, combined cycle generating facility with a combined generating capacity of approximately 500 MW. Commercial operations are expected to commence in the Summer of 2000.

Duke Energy Hidalgo further states that copies of the application were served upon the Securities and Exchange Commission and the Public Utility Commission of Texas.

Comment date: January 26, 2000, in accordance with Standard Paragraph E at the end of this notice. The Commission will limit its consideration of comments to those that concern the adequacy or accuracy of the application.

11. Entergy Services, Inc.

[Docket No. ER91–569–009]

Take notice that on December 30, 1999, Entergy Services, Inc., tendered for filing an updated market power analysis on behalf of the Entergy Operating Companies and their affiliates.

Comment date: January 19, 2000, in accordance with Standard Paragraph E at the end of this notice.

12. New England Power Pool

[Docket Nos. ER99–2335–000; ER00–984–000; and ER00–985–000 (not consolidated)]

Take notice that on December 30, 1999, the New England Power Pool (NEPOOL) Participants Committee tendered for filing: (1) an informational filing identifying the status of its efforts to develop a Congestion Management System (CMS) and Multi-Settlement System (MSS); (2) the Forty-Ninth Agreement Amending the NEPOOL Agreement (the Forty-Ninth Agreement), which would extend by sixty days the time period for Participants to amend NEPOOL arrangements relating to the allocation of congestion costs; and (3) the Fiftieth Agreement Amending the NEPOOL Agreement (the Fiftieth Agreement), which would eliminate NEPOOL's Operable Capability market as of March 1, 2000.

The NEPOOL Participants Committee states that copies of these materials were sent to all entities on the service lists in the captioned dockets, to the participants in the New England Power Pool, and to the New England state governors and regulatory commissions.

Comment date: January 19, 2000, in accordance with Standard Paragraph E at the end of this notice.

13. Mid-Continent Area Power Pool

[Docket No. ER99–2649–001]

Take notice that on December 30, 1999, the Mid-Continent Area Power Pool (MAPP), tendered for filing on behalf of its members that are subject to Commission jurisdiction as public utilities under Section 201(e) of the Federal Power Act, 16 U.S.C. § 824(e), its request to continue using the procedures for curtailing unscheduled generation-to-load deliveries that currently are in effect as part of MAPP's line loading relief procedure. This filing is made in accordance with the Commission's order in *Mid-Continent*

Area Power Pool, 87 FERC ¶ 61,333 (1999).

Comment date: January 19, 2000, in accordance with Standard Paragraph E at the end of this notice.

14. Vermont Electric Power Company, Inc.

[Docket No. ER99–4535–001]

Take notice that on December 29, 1999, Vermont Electric Power Company, Inc. (VELCO), tendered for filing before the Federal Energy Regulatory Commission pursuant to Section 205 of the Federal Power Act, 16 U.S.C. § 824d, revised tariff sheets to its open access transmission tariff in the above reference docket.

Comment date: January 18, 2000, in accordance with Standard Paragraph E at the end of this notice.

15. Southern California Edison Company

[Docket No. ER00–931–000]

Take notice that on December 29, 1999, Southern California Edison Company (SCE), tendered for filing an unexecuted Service Agreement for Wholesale Distribution Service and an unexecuted copy of an Interconnection Facilities Agreement between Delano Energy Company, Inc. (Delano) and SCE.

These agreements specify the terms and conditions pursuant to SCE will interconnect Delano's generation to its electrical system and provide up to 49.9 MW of Distribution Service to Delano.

Comment date: January 18, 2000, in accordance with Standard Paragraph E at the end of this notice.

16. American Electric Power Service Corporation

[Docket No. ER00–932–000]

Take notice that on December 29, 1999, American Electric Power Service Corporation (AEPSC), tendered for filing blanket service agreements by the AEP Companies under the Wholesale Market Tariff of the AEP Operating Companies (Power Sales Tariff). The Power Sales Tariff was accepted for filing effective October 10, 1997 and has been designated AEP Operating Companies' FERC Electric Tariff Original Volume No. 5.

AEPSC respectfully requests waiver of notice to permit the service agreements to be made effective as specified in the submittal letter to the Commission with this filing.

A copy of the filing was served upon the Parties and the State Utility Regulatory Commissions of Indiana, Kentucky, Michigan, Ohio, Tennessee, Virginia and West Virginia.

Comment date: January 18, 2000, in accordance with Standard Paragraph E at the end of this notice.

17. Southern Energy Delta, L.L.C.

[Docket No. ER00–936–000]

Take notice that on December 29, 1999, Southern Energy Delta, L.L.C. (Southern Delta), tendered for filing two revised Must-Run Service Agreements (RMR Agreements) between Southern Delta and the California Independent System Operator Corporation. These agreements reflect: (1) the transfer of ownership of facilities from Pacific Gas & Electric Company to Southern Delta; and (2) Unit Characteristics, Contract Service Limits, and Unit Hourly Cap Heat Inputs for the year beginning January 1, 2000.

Comment date: January 18, 2000, in accordance with Standard Paragraph E at the end of this notice.

18. Southern Energy Potrero, L.L.C.

[Docket No. ER00–937–000]

Take notice that on December 29, 1999, Southern Energy Potrero, L.L.C. (Southern Potrero), tendered for filing a revised Must-Run Service Agreement (RMR Agreement) between Southern Potrero and the California Independent System Operator Corporation. This agreement reflects: (1) the transfer of ownership of facilities from Pacific Gas & Electric Company to Southern Potrero; and (2) Unit Characteristics, Contract Service Limits, and Unit Hourly Cap Heat Inputs for the year beginning January 1, 2000.

Comment date: January 18, 2000, in accordance with Standard Paragraph E at the end of this notice.

19. Montaup Electric Company

[Docket No. ER00–942–000]

Take notice that on December 29, 1999, Montaup Electric Company tendered for filing an executed Service Agreement with Constellation Power Source. Montaup will provide the Non-Firm Point-To-Point transmission service and Constellation will pay for the service in accordance with the provisions of Part II of Montaup's Open Access Transmission Tariff No. 7.

Montaup requests that the Service Agreement be effective as of December 20, 1999, the date on which service commenced.

Comment date: January 18, 2000, in accordance with Standard Paragraph E at the end of this notice.

20. Blackstone Valley Electric Company

[Docket No. ER00–943–000]

Take notice that on December 29, 1999 Blackstone Valley Electric Company tendered for filing an Acknowledgment and Consent Agreement among Blackstone Valley Electric Company, Lake Road Generating Company, L.P., Lake Road Trust Ltd., and Citibank, N.A. The Acknowledgment and Consent Agreement provides for transfer by Lake Road Generating Company, L.P. of its rights and obligations under the Related Transmission Facilities Agreement to Lake Road Trust Ltd., and Citibank, N.A. and Blackstone Valley Electric Company's consent to the transfer.

Comment date: January 18, 2000, in accordance with Standard Paragraph E at the end of this notice.

21. Public Service Company of Oklahoma

[Docket No. ER00–944–000]

Take notice that on December 29, 1999, Public Service Company of Oklahoma (PSO), tendered for filing the Second Amendment and the Third Amendment to the Interconnection Agreement between PSO and Grand River Dam Authority (GRDA).

PSO requests an effective date of June 1, 1998 for the Second Amendment and an effective date of January 1, 2000 for the Third Amendment. Accordingly, PSO requests waiver of the Commission's notice requirements.

PSO states that a copy of the filing was served on GRDA and the Oklahoma Corporation Commission.

Comment date: January 18, 2000, in accordance with Standard Paragraph E at the end of this notice.

22. Central Power and Light Company

[Docket No. ER00–945–000]

Take notice that on December 29, 1999, Central Power and Light Company (CPL) tendered for filing an Interconnection Agreement between CPL and Sharyland Utilities, L.P. (Sharyland).

CPL requests an effective date for the Interconnection Agreement of January 1, 2000. Accordingly, CPL requests waiver of the Commission's notice requirements.

CPL states that a copy of the filing was served on Sharyland and the Public Utility Commission of Texas.

Comment date: January 18, 2000, in accordance with Standard Paragraph E at the end of this notice.

23. Southwest Power Pool, Inc.

[Docket No. ER00–946–000]

Take notice that on December 29, 1999, Southwest Power Pool, Inc. (SPP), tendered for filing executed service agreements for firm point-to-point transmission service, non-firm point-to-

point transmission service and loss compensation service under the SPP Tariff with Western Resources, TransAlta Energy Marketing (U.S.) Inc. (TEMUS) and Calpine Power Services Company (Calpine).

Copies of this filing were served upon Calpine, TEMUS and Western Resources.

Comment date: January 18, 2000, in accordance with Standard Paragraph E at the end of this notice.

24. Oswego Harbor Power LLC

[Docket No. ER00–947–000]

Take notice that on December 29, 1999, Oswego Harbor Power LLC, tendered for filing under its market-based rate tariff a long-term service agreement with Niagara Mohawk Power Corporation and a long-term service agreement with NRG Power Marketing, Inc.

Comment date: January 18, 2000, in accordance with Standard Paragraph E at the end of this notice.

25. Select Energy, Inc., and Northeast Utilities Service Company

[Docket No. ER00–952–000]

Take notice that on December 29, 1999, Select Energy, Inc. (Select Energy) and Northeast Utilities Service Company (NUSCO), on behalf of The Connecticut Light and Power Company (CL&P) and Western Massachusetts Electric Company (WMECO), requested that the Commission waive certain provisions of their market-based sales tariffs and codes of conduct or, in the alternative, that the Commission accept for filing a ''Wholesale Requirements Service Sales Agreement For Interruptible Contract Customers' (the Interruptible Supply Agreement). Select Energy and NUSCO state that the Interruptible Supply Agreement was entered into as a result of a Request For Proposals (RFP) issued by NUSCO to obtain a wholesale power supply for interruptible customers for the period January 1, 2000 through December 31, 2000.

The requested effective date is January 1, 2000.

Select Energy and NUSCO state that copies of this filing have been sent to the Connecticut Department of Public Utility Control and the Massachusetts Department of Telecommunications and Energy.

Comment date: January 18, 2000, in accordance with Standard Paragraph E at the end of this notice.

26. MidAmerican Energy Company

[Docket No. ER00–964–000]

Take notice that on December 30, 1999, MidAmerican Energy Company (MidAmerican), 666 Grand Avenue, 2900 Ruan Center, Des Moines, Iowa 50309 tendered for filing amendments to Network Integration Transmission Service Agreements, Network Operating Agreements and/or Firm Transmission Service Agreements with the Municipal Electric Utility of Waverly, Iowa (Waverly); the City of Denver, Iowa (Denver); the City of Sergeant Bluff, Iowa (Sergeant Bluff); the City of Geneseo, Illinois (Geneseo); the City of Eldridge, Iowa (Eldridge); and the Ames Municipal Electric System (Ames).

MidAmerican states that the amendments were executed by MidAmerican pursuant to its Open Access Transmission Tariff (OATT) for the purpose of revising direct assignment facility (DAF) charges as a result of the reclassification of MidAmerican's transmission and local distribution facilities under the seven-indicator test of Order No. 888 as filed in Docket No. ER99–3887–000.

MidAmerican requests an effective date of January 1, 2000 for each of the amendments.

Copies of the filing were served on Waverly, Denver, Sergeant Bluff, Geneseo, Eldridge, Ames, the Iowa Utilities Board, the Illinois Commerce Commission, the South Dakota Public Utilities Commission and all parties to Docket No. ER99–3887–000.

Comment date: January 19, 2000, in accordance with Standard Paragraph E at the end of this notice.

27. FirstEnergy Operating Companies

[Docket No. ER00–965–000]

Take note that on December 30, 1999, the FirstEnergy Operating Companies (The Cleveland Electric Illuminating Company, Ohio Edison Company, Pennsylvania Power Company, and The Toledo Edison Company), tendered for filing a Service Agreement and Operating Agreement for Network Integration Transmission Service to be provided by the FirstEnergy Operating Companies to American Municipal Power-Ohio, Inc. (AMP-Ohio) on behalf of certain designated municipal electric systems in Ohio and Pennsylvania. These Agreements are designed to supercede the existing Network Agreements between the FirstEnergy Operating Companies and AMP-Ohio.

FirstEnergy Operating Companies request an effective date of December 1, 1999 for these Agreements. A revised Index of Network Customers is also submitted as part of this filing.

Copies of this filing have been served on the utility commissions in Ohio and Pennsylvania.

Comment date: January 19, 2000, in accordance with Standard Paragraph E at the end of this notice.

28. ISO New England Inc.

[Docket No. ER00–971–000]

Take notice that on December 30, 1999 ISO New England Inc. (the ISO), tendered for filing, pursuant to Section 205 of the Federal Power Act, a Request for Expedited Approval of Revisions to NEPOOL Market Rules 6, 8 and 9.

Copies of said filing have been served upon the Participants in the New England Power Pool, non-Participant transmission customers and to the New England State Governors and Regulatory Commissions.

Comment date: January 19, 2000, in accordance with Standard Paragraph E at the end of this notice.

29. Southwest Power Pool, Inc.

[Docket No. ER00–975–000]

Take notice that on December 30, 1999, Southwest Power Pool, Inc. (SPP), tendered for filing a request for Commission recognition as an Independent System Operator and Regional Transmission Organization.

SPP requests the Commission to act on this request on or before March 1, 2000.

Copies of this filing were served upon all SPP Members and customers, as well as on all state commissions within the region.

Comment date: January 19, 2000, in accordance with Standard Paragraph E at the end of this notice.

30. Vermont Electric Power Company, Inc.

[Docket No. ER00–979–000]

Take notice that on December 30, 1999, Vermont Electric Power Company, Inc. (VELCO), tendered for filing pursuant to Section 205 of the Federal Power Act, revisions to the rates and non-rate terms of service for transmission and related ancillary services taken under its open access transmission tariff.

VELCO proposes to implement a formula rate for transmission service and Ancillary Service No. 1 (Scheduling, System Control and Dispatch Service). The formula is based on many of the same variables and calculations used in the NEPOOL formula. On a monthly basis, the charges assessed pursuant to the formula will be updated using data from the VELCO's General Account Ledger from the month prior. Incorporated into the formula is a rate of return on equity of 11.5 percent. In addition, VELCO proposes to make various typographical and format corrections.

VELCO requests that these revisions become effective on March 1, 2000, and that the Commission grant waiver of any and all applicable requirements to the extent necessary to establish such effective date.

VELCO served copies of the filing upon the Vermont Department of Public Service, and upon those persons listed in the letter submitted with the filing.

Comment date: January 19, 2000, in accordance with Standard Paragraph E at the end of this notice.

31. Bangor Hydro-Electric Company

[Docket No. ER00–980–000]

Take notice that on December 30, 1999, Bangor Hydro-Electric Company (Bangor Hydro), tendered for filing pursuant to Section 205 of the Federal Power Act and Part 35 of the Commission's Regulations, revisions to its Open Access Transmission Tariff (OATT) to implement retail open access in the state of Maine and to propose a rate formula for the rates charged under the OATT.

Bangor Hydro proposes that the filing become effective March 1, 2000.

Copies of this filing were served on the current customers under the OATT, current wholesale requirements customers that will become transmission customers on March 1, 2000, participants in MPUC Docket No. 99–185, and the state commission within whose jurisdiction Bangor Hydro transmits electricity under the OATT.

Comment date: January 19, 2000, in accordance with Standard Paragraph E at the end of this notice.

32. New England Power Pool

[Docket No. ER00–981–000]

Take notice that on December 30, 1999, the New England Power Pool (NEPOOL) Participants Committee submitted the Forty-Eighth Agreement Amending the New England Power Pool Agreement (Forty-Eighth Agreement) which continues the restructuring and refinement of the NEPOOL committee process.

The NEPOOL Participants Committee states that copies of these materials were sent to the New England state governors and regulatory commissions and the NEPOOL Participants.

Comment date: January 19, 2000, in accordance with Standard Paragraph E at the end of this notice.

33. Central Maine Power Company

[Docket No. ER00–982–000]

Take notice that on December 30, 1999, Central Maine Power Company (Central Maine or CMP), tendered for filing pursuant to Section 205 of the Federal Power Act, and Part 35 of the Regulations of the Federal Energy Regulatory Commission, revisions to the rates and non-rate terms of service for transmission and related services taken under its open access transmission tariff (OATT).

Central Maine proposes to implement a formula rate for transmission service and Ancillary Service No. 1 (Scheduling, System Control and Dispatch Service). The formula is based on many of the same variables and calculations used in the NEPOOL formula. Each June 1, the charges assessed pursuant to the formula will be updated using data from the CMP's most recently filed FERC Form 1. Incorporated into the formula is a rate of return on equity of 12.1 percent.

Comment date: March 1, 2000, in accordance with Standard Paragraph E at the end of this notice.

34. Yankee Atomic Electric Company

[Docket No. ER00–983–000]

Take notice that on December 30, 1999, Yankee Atomic Electric Company (Yankee), tendered for filing, pursuant to Section 205 of the Federal Power Act and Section 35.13 of the Commission's Regulations, a revised decommissioning cost estimate and funding schedule for Yankee's nuclear generating plant.

Yankee states that the rate change proposed would reduce decommissioning charges during the year 2000, the last year of scheduled decommissioning collections, by $650,500, and would reduce total wholesale charges during the year 2000 by $11.7 million.

Comment date: January 19, 2000, in accordance with Standard Paragraph E at the end of this notice.

35. California Independent System Operator Corporation

[Docket No. ER00–997–000]

Take notice that on December 30, 1999, the California Independent System Operator Corporation (ISO), tendered for filing with the Federal Energy Regulatory Commission its ''Market Power in the San Diego Basin: Addendum to Annual Report on Market Issues and Performance'' (ISO Addendum), prepared by the Department of Market Analysis of the ISO. The ISO Addendum presents a preliminary analysis of market power in electric generation in the San Diego Basin, background on regulatory and policy decisions relating to market power, an overview of demand and supply conditions, the methodology used in the Addendum to assess market power, and the implications of issues and trends identified in the Addendum.

The ISO states that copies of the ISO Addendum have been served upon the California Public Utilities Commission, the California Energy Commission, and the California Electricity Oversight Board. The ISO is also posting the ISO Addendum on its Home Page, www.caiso.com.

Comment date: January 19, 2000, in accordance with Standard Paragraph E at the end of this notice.

36. Public Service Company of New Hampshire

[Docket No. ER00–930–000]

Take notice that on December 29, 1999, Public Service Company of New Hampshire (PSNH) tendered for filing an information statement concerning PSNH's fuel and purchased power adjustment clause charges and credits for the following periods:

January 1, 1999 to June 30, 1999
July 1, 1999 to December 31, 1999
January 1, 2000 to June 30, 2000

This information statement is submitted pursuant to a settlement agreement approved by the Commission in *Publ Serv. Co. of New Hampshire*, 57 FERC ¶ 61, 068 (1991), and a settlement stipulation approved by the Commission by Letter Order in Docket Nos. ER91–143–000, ER91–235–000 and EL91–15–000, dated July 22, 1992.

Copies of this filing were served upon the Town of Ashland Electric Company, the New Hampton Village Precinct, and the New Hampshire Electric Cooperative, Inc.

Comment date: January 18, 2000, in accordance with Standard Paragraph E at the end of this notice.

37. Commonwealth Edison Company

[Docket No. ER00–933–000]

Take notice that on December 29, 1999, Commonwealth Edison Company (ComEd) submitted for filing two long-term agreements between ComEd and Entergy Power Marketing Corporation (Entergy). Under the first agreement, ComEd is providing negotiated capacity under its Power Sales and Reassignment of Transmission Rights Tariff and control area services purchased under ComEd's Open Access Transmission Tariff. Under the second agreement, ComEd agreed to provide certain back-up energy supply services under ComEd's Market Based Rate Schedule.

ComEd requests that the Commission establish a January 2, 2000 effective date.

A copy of this filing was served on Entergy.

Comment date: January 18, 2000, in accordance with Standard Paragraph E at the end of this notice.

38. New England Power Pool

[Docket No. ER00–934–000]

Take notice that on December 29, 1999, the New England Power Pool Participants Committee submitted changes to a number of Market Rules and Procedures approved by the Participants Committee over the last several months.

The NEPOOL Participants Committee states that copies of these materials were sent to the New England state governors and regulatory commissions and the Participants in the New England Power Pool.

Comment date: January 18, 2000, in accordance with Standard Paragraph E at the end of this notice.

39. Southern Company Services, Inc.

[Docket No. ER00–935–000]

Take notice that on December 28, 1999, Southern Company Services, Inc. (SCS), as agent for Alabama Power Company, Georgia Power Company, Gulf Power Company, Mississippi Power Company and Savannah Electric and Power Company (the Southern Companies), tendered for filing information pertaining to Southern Companies' recovery of Post-Retirement Benefits Other Than Pensions (PBOPs).

Comment date: January 18, 2000, in accordance with Standard Paragraph E at the end of this notice.

40. New Century Services, Inc.

[Docket No. ER00–938–000]

Take notice that on December 29, 1999, New Century Services, Inc. (NCS), on behalf of Public Service Company of Colorado (Public Service), submitted for filing the following agreements under Public Service's Rate Schedule for Market-Based Power Sales (Public Service FERC Electric Tariff, Original Volume No. 6): 1) the Master Power Purchase and Sale Agreement between Public Service and Municipal Energy Agency of Nebraska (MEAN), which is an umbrella service agreement under the Public Service's market-based rate schedule, and 2) four separate transaction agreements for specific sales by Public Service to MEAN of capacity and associated energy for durations of longer than one year.

Comment date: January 26, 2000, in accordance with Standard Paragraph E at the end of this notice.

41. Lake Worth Generation L.L.C.

[Docket No. ER00–939–000]

Take notice that on December 29, 1999, Lake Worth Generation L.L.C. (LWG) tendered for filing a petition for waiver and blanket approvals under various regulations of the Commission and for an order accepting its proposed tariff governing negotiated market-based capacity and energy sales. If accepted for filing, LWG will use the market rate tariff to sell power from its generation facility.

A copy of this filing was served on the Florida Public Service Commission.

Comment date: January 18, 2000, in accordance with Standard Paragraph E at the end of this notice.

42. Commonwealth Edison Company

[Docket No. ER00–940–000]

Take notice that Commonwealth Edison Company (ComEd) on December 29, 1999 submitted for filing an Agreement for Dynamic Scheduling of Transmission Service under ComEd's Open Access Transmission Tariff for service provided by ComEd to supply the requirements for Ormet Corporation's load within the service territory of American Electric Power Corporation.

ComEd requests an effective date of January 1, 2000.

Comment date: January 18, 2000, in accordance with Standard Paragraph E at the end of this notice.

43. PJM Interconnection, L.L.C.

[Docket No. ER00–941–000]

Take notice that on December 29, 1999, pursuant to the Commission's direction in *PJM Interconnection, L.L.C.*, 87 FERC ¶ 61,299 (1999), PJM Interconnection, L.L.C. (PJM), submitted for filing amendments to the PJM Open Access Tariff and Schedule 1 of the Amended and Restated Operating Agreement of PJM Interconnection, L.L.C. to provide Interconnection Customers that have cost responsibility for the construction of transmission facilities or upgrades necessary to accommodate their Interconnection Requests with rights to Incremental Fixed Transmission Rights.

PJM requests an effective date of February 27, 2000.

Copies of this filing were served upon all PJM Members and the electric regulatory commissions in the PJM control area.

Comment date: January 18, 2000, in accordance with Standard Paragraph E at the end of this notice.

44. Minnesota Power, Inc.

[Docket No. ER00–929–000]

Take notice that on December 29, 1999, Minnesota Power, Inc. (MP) tendered for filing its Amendment No. 3 of the Electric Service Agreement with the Dahlberg Light & Power Company (Dahlberg). MP states the term of the Agreement is from January 1, 2000 through the existing ending date.

Copies of this filing have been served on the Dahlberg Company and the Minnesota Public Utilities Commission.

Comment date: January 18, 2000, in accordance with Standard Paragraph E at the end of this notice.

Standard Paragraphs

E. Any person desiring to be heard or to protest such filing should file a motion to intervene or protest with the Federal Energy Regulatory Commission, 888 First Street, N.E., Washington, D.C. 20426, in accordance with Rules 211 and 214 of the Commission's Rules of Practice and Procedure (18 CFR 385.211 and 385.214). All such motions or protests should be filed on or before the comment date. Protests will be considered by the Commission in determining the appropriate action to be taken, but will not serve to make protestants parties to the proceeding. Any person wishing to become a party must file a motion to intervene. Copies of these filings are on file with the Commission and are available for public inspection. This filing may also be viewed on the Internet at http://www.ferc.fed.us/ online/rims.htm (call 202–208–2222 for assistance).

David P. Boergers,

Secretary.

[FR Doc. 00–814 Filed 1–12–00; 8:45 am]

BILLING CODE 6717–01–P

DEPARTMENT OF ENERGY

Federal Energy Regulatory Commission

[Docket No. EC99–79–000, et al.;]

Public Service Electric and Gas Company, et al.; Electric Rate and Corporate Regulation Filings

January 6, 2000.

Take notice that the following filings have been made with the Commission:

1. Public Service Electric and Gas Company, PSEG Fossil LLC et al.

[Docket Nos. EC99–79–000 and ER99–3151–001]

Take notice that on December 8, 1999, Public Service Electric and Gas Company, PSEG Fossil LLC, PSEG Nuclear LLC, and PSEG Energy Resources & Trade LLC (collectively, Applicants) supplemented their compliance filing in the above-referenced dockets in response to a Commission Staff request that the applicants detail the ancillary services to be made available under PSEG Energy Resources & Trade LLC's Market-Based Power Sales Tariff.

Comment date: January 26, 2000, in accordance with Standard Paragraph E at the end of this notice.

2. Wisconsin Electric Power Company

[Docket No. EC00–45–000]

Take notice that on December 30, 1999, Wisconsin Electric Power Company (WEPCO) tendered for filing with the Federal Energy Regulatory Commission (FERC or the Commission) an Application for Authorization to Transfer Jurisdictional Transmission Assets Pursuant to Section 203 of the Federal Power Act (203 Application).

Comment date: January 31, 2000, in accordance with Standard Paragraph E at the end of this notice.

3. Lakefield Junction LLP

[Docket No. EG00–61–000]

Take notice that on December 29, 1999, Lakefield Junction LLP filed with the Federal Energy Regulatory Commission an application for determination of exempt wholesale generator status pursuant to section 32(a)(1) of the Public Utility Holding Company Act of 1935 (PUHCA). The applicant is a limited liability partnership organized under the laws of the State of Delaware that will be engaged directly and exclusively in developing, owning and operating a nominal 550 MW gas-fired generating facility (Facility) and selling electric energy at wholesale. The Facility is located near Trimont, Minnesota.

Comment date: January 27, 2000, in accordance with Standard Paragraph E at the end of this notice. The Commission will limit its consideration of comments to those that concern the adequacy or accuracy of the application.

4. Conectiv Energy, Inc.

[Docket No. EG00–74–000]

Take notice that on January 5, 2000, Conectiv Energy, Inc. (CEI), at 800 King Street, P.O. Box 231, Wilmington, Delaware 19899, filed with the Federal Energy Regulatory Commission an application for determination of exempt wholesale generator status pursuant to Part 365 of the Commission's regulations.

CEI is a subsidiary of Conectiv, which is a public utility holding company under the Public Utility Holding Company Act (PUHCA). Conectiv also owns Delmarva Power & Light Company (Delmarva) and Atlantic City Electric Company (ACE), each of which are operating public utilities under PUHCA and the Federal Power Act. Conectiv also owns Conectiv Energy Supply, Inc. (CESI), which is engaged in competitive wholesale and retail sales of electricity, among other activities.

CEI intends to own and operate four combustion turbine generation facilities each with a capacity of about 110 MW. The facilities do not currently exist but are to be constructed pursuant to a contract with a manufacturer. CEI represents that it will be exclusively in the business of owning and operating eligible facilities and selling electric energy at wholesale. CEI represents that no State Commission determinations are necessary with respect to these facilities to be constructed.

Comment date: January 27, 2000, in accordance with Standard Paragraph E at the end of this notice. The Commission will limit its consideration of comments to those that concern the adequacy or accuracy of the application.

5. Duke Energy South Bay LLC

[Docket No. ER00–435–000]

Take notice that on December 20, 1999, Duke Energy South Bay LLC (DESB) filed corrected revised sheets of its Must-Run Rate Schedule.

The revised sheets are proposed to be effective January 1, 2000.

Comment date: January 18, 2000, in accordance with Standard Paragraph E at the end of this notice.

6. Duke Energy South Bay, LLC

[Docket No. ER00–824–000]

Take notice that on December 29, 1999, Duke Energy South Bay, LLC (DESB) hereby tenders for filing a revised first page of Schedule A to the Reliability Must Run Agreement (the RMR Agreement) between DESB and the California Independent System Operator Corporation (the ISO).

DESB requests that the revised first page of Schedule A be made effective January 1, 2000.

Comment date: January 18, 2000, in accordance with Standard Paragraph E at the end of this notice.

7. California Independent System Operator Corporation

[Docket No. ER00–948–000]

Take notice that on December 30, 1999, the California Independent System Operator Corporation (ISO), tendered for filing a Participating Generator Agreement between the ISO and Louisiana-Pacific Samoa, Inc., for acceptance by the Commission.

The ISO states that this filing has been served on Louisiana-Pacific Samoa, Inc., and the California Public Utilities Commission.

The ISO is requesting waiver of the 60-day notice requirement to allow the Participating Generator Agreement to be made effective December 14, 1999.

Comment date: January 19, 2000, in accordance with Standard Paragraph E at the end of this notice.

8. California Independent System Operator Corporation

[Docket No. ER00–949–000]

Take notice that on December 30, 1999, the California Independent System Operator Corporation (ISO), tendered for filing a Meter Service Agreement for ISO Metered Entities between the ISO and Louisiana-Pacific Samoa, Inc., for acceptance by the Commission.

The ISO states that this filing has been served on Louisiana-Pacific Samoa, Inc., and the California Public Utilities Commission.

The ISO is requesting waiver of the 60-day notice requirement to allow the Meter Service Agreement for ISO Metered Entities to be made effective December 14, 1999.

Comment date: January 19, 2000, in accordance with Standard Paragraph E at the end of this notice.

9. California Power Exchange Corporation

[Docket No. ER00–950–000]

Take notice that on December 30, 1999, California Power Exchange Corporation (CalPX), on behalf of its CalPX Trading Services Division (CTS), tendered for filing proposed changes in Appendix 2 of its CalPX Trading Services Rate Schedule FERC No. 1. CTS states that the changes are designed to accommodate product enhancements that will permit participants to contract for additional delivery points and additional delivery periods.

CTS requests an effective date of March 1, 2000.

Comment date: January 19, 2000, in accordance with Standard Paragraph E at the end of this notice.

10. California Power Exchange Corporation

[Docket No. ER00–951–000]

Take notice that on December 30, 1999, California Power Exchange Corporation (CalPX), tendered for filing proposed amendments to its tariff to accommodate the scheduling of Firm Transmission Rights (FTRs). CalPX understands that the California Independent System Operator (ISO) intends to permit scheduling of FTRs by March 1, 2000 and perhaps as early as February 1, 2000.

CalPX requests an effective date to coincide with the date the ISO commences scheduling FTRs, provided that all necessary software changes have been implemented by that date. The

proposed tariff changes also accommodate the new scheduling templates adopted by the ISO for scheduling FTRs, Existing Transmission Contracts (ETCs) and other contract usage rights.

Comment date: January 19, 2000, in accordance with Standard Paragraph E at the end of this notice.

11. PG Power Sales Three, L.L.C.

[Docket No. ER00–954–000]

Take notice that on December 30, 1999, PG Power Sales Three, L.L.C., tendered for filing initial FERC electric service tariff, Rate Schedule No. 1, and a petition for blanket approvals and waivers of various Commission Regulations under the Federal Power Act.

Comment date: January 19, 2000, in accordance with Standard Paragraph E at the end of this notice.

12. PG Power Sales One, L.L.C.

[Docket No. ER00–955–000]

Take notice that, on December 30, 1999, PG Power Sales One, L.L.C., tendered for filing initial FERC electric service tariff, Rate Schedule No. 1, and a petition for blanket approvals and waivers of various Commission regulations under the Federal Power Act.

Comment date: January 19, 2000, in accordance with Standard Paragraph E at the end of this notice.

13. PG Power Sales Two, L.L.C.

[Docket No. ER00–956–000]

Take notice that on December 30, 1999, PG Power Sales Two, L.L.C., tendered for filing initial FERC electric service tariff, Rate Schedule No. 1, and a petition for blanket approvals and waivers of various Commission Regulations under the Federal Power Act.

Comment date: January 19, 2000, in accordance with Standard Paragraph E at the end of this notice.

14. Louisville Gas and Electric Company/Kentucky Utilities Company

[Docket No. ER00–957–000]

Take notice that on December 30, 1999, Louisville Gas and Electric Company/ Kentucky Utilities Company (LG&E/KU), tendered for filing an executed Service Agreement for Network Integration Transmission Service between LG&E/KU and East Kentucky Power Cooperative, Inc., under LG&E/KU's Open Access Transmission Tariff.

Comment date: January 19, 2000, in accordance with Standard Paragraph E at the end of this notice.

15. Alliant Energy Corporate Services, Inc.

[Docket No. ER00–958–000]

Take notice that on December 30, 1999, Alliant Energy Corporate Services, Inc., tendered for filing on behalf of IES Utilities, Inc. (IES), Interstate Power Company (IPC) and Wisconsin Power and Light Company (WPL), two executed Service Agreements for Long-Term Firm Point-to-Point Transmission Service. The agreements have been signed by Alliant Energy Corporate Services, Inc. (the Transmission Provider) and Alliant Energy Corporate Services, Inc., (the Transmission Customer).

Alliant Energy Corporate Services, Inc., requests an effective date of January 1, 2000, and accordingly, seeks waiver of the Commission's notice requirements.

A copy of this filing has been served upon the Illinois Commerce Commission, the Minnesota Public Utilities Commission, the Iowa Department of Commerce, and the Public Service Commission of Wisconsin.

Comment date: January 19, 2000, in accordance with Standard Paragraph E at the end of this notice.

16. Montana Power Company

[Docket No. ER00–959–000]

Take notice that on December 30, 1999, The Montana Power Company (Montana) tendered for filing with the Federal Energy Regulatory Commission pursuant to 18 CFR 35.13 the executed Firm and Non-Firm Point-to-Point Service Agreements with The Montana Power Company, Colstrip 4 Lease Management Division, PP&L EnergyPlus Co., and PP&L Montana LLC, and unexecuted Firm and Non-Firm Point-to-Point Service Agreements with Duke Energy Trading and Marketing, LLC, under Montana's FERC Electric Tariff, Fourth Revised Volume No. 5 (Open Access Transmission Tariff).

A copy of the filing was served upon Montana Power Company, Colstrip 4 Lease Management Division, PP&L EnergyPlus Co., PP&L Montana LLC, Duke Energy Trading and Marketing, LLC.

Comment date: January 19, 2000, in accordance with Standard Paragraph E at the end of this notice.

17. Minnesota Power, Inc.

[Docket No. ER00–960–000]

Take notice that on December 30, 1999, Minnesota Power, Inc., tendered for filing signed Non-Firm and Short-term Firm Point-to-Point Transmission Service Agreements with NewEnergy, Inc., under its Short-Term Firm and Non-Firm Point-to-Point Transmission Service to satisfy its filing requirements under this tariff.

Comment date: January 19, 2000, in accordance with Standard Paragraph E at the end of this notice.

18. Public Service Electric and Gas Company

[Docket No. ER00–961–000]

Take notice that on December 30, 1999, Public Service Electric and Gas Company (PSE&G) of Newark, New Jersey tendered for filing an agreement dated November 9, 1999, for the long-term sale of electric capacity and energy to meet the full requirements of the Borough of South River, New Jersey (the Borough), less any New York Power Authority hydroelectric allocation and the procurement of associated transmission service under the prevailing PJM Open Access Transmission Tariff, or its successor, pursuant to the PSE&G Wholesale Power Market Based Sales Tariff, presently on file with the Commission.

PSE&G also provided notice to the Commission of the termination of the ''Agreement For The Purchase and Sale of Energy and Capacity'' between PSE&G and the Borough dated October 5, 1994 (PSE&G Rate Schedule No. 158), effective as of December 1, 1999 when the October 5, 1994 agreement was superceded by the November 9, 1999 agreement.

To the extent needed, PSE&G requests waiver of the Commission's regulations such that the November 9, 1999 agreement can be made effective as of December 1, 1999 and such that the termination of the October 5, 1994 agreement can be made effective as of December 1, 1999.

Copies of the filing have been served upon the Borough of South River, New Jersey and the New Jersey Board of Public Utilities.

Comment date: January 19, 2000, in accordance with Standard Paragraph E at the end of this notice.

19. Western Resources, Inc.

[Docket No. ER00–962–000]

Take notice that on December 30, 1999, Western Resources, Inc. (WR) tendered for filing an Energy Coordination Agreement and a Telemetry Services Agreement between WR and Missouri Joint Municipal Electric Utility Commission (MJMEUC). WR requests an effective date of January 1, 2000.

Notice of the filing has been served upon MJMEUC and the Kansas Corporation Commission.

Comment date: January 19, 2000, in accordance with Standard Paragraph E at the end of this notice.

20. Northeast Utilities Service Company and Select Energy, Inc.

[Docket No. ER00–963–000]

Take notice that on December 30, 1999, Northeast Utilities Service Company (NUSCO), on behalf of The Connecticut Light and Power Company (CL&P) and Select Energy, Inc. (Select Energy), tendered for filing a request that the Commission waive certain provisions of their market-based sales tariffs and codes of conduct or, in the alternative, that the Commission accept for filing a Letter of Agreement between NUSCO and Select Energy under NUSCO's market-based rate tariff (Letter Agreement). Select Energy and NUSCO state that the Letter Agreement was entered into as a result of a Request For Proposals (RFP) issued by NUSCO.

The requested effective date is January 1, 2000.

NUSCO and Select Energy state that copies of this filing have been sent to the Connecticut Department of Public Utility Control.

Comment date: January 19, 2000, in accordance with Standard Paragraph E at the end of this notice.

21. Southwestern Public Service Company

[Docket No. ER00–966–000]

Take notice that on December 30, 1999, Southwestern Public Service Company (Southwestern), tendered for filing a proposed amendment to its delivery point listing with Lyntegar Electric Cooperative, Inc. (Lyntegar).

The proposed amendment reflects a new delivery point for service to Lyntegar.

Comment date: January 19, 2000, in accordance with Standard Paragraph E at the end of this notice.

22. New England Power Pool

[Docket No. ER00–967–000]

Take notice that on December 30, 1999, the New England Power Pool (NEPOOL) Participants Committee filed for acceptance a signature page to the New England Power Pool Agreement dated September 1, 1971, as amended, signed by the Union of Concerned Scientists (UCS). The NEPOOL Agreement has been designated NEPOOL FPC No. 2.

The Participants Committee states that the Commission's acceptance of UCS's signature page would permit NEPOOL to expand its membership to include UCS. The Participants Committee further states that the filed signature page does not change the NEPOOL Agreement in any manner, other than to make UCS a member in NEPOOL. The Participants Committee requests an effective date of January 1, 2000, for commencement of participation in NEPOOL by UCS.

Comment date: January 19, 2000, in accordance with Standard Paragraph E at the end of this notice.

23. New England Power Pool

[Docket No. ER00–968–000]

Take notice that on December 30, 1999, the New England Power Pool (NEPOOL) Participants Committee filed for acceptance a signature page to the New England Power Pool Agreement dated September 1, 1971, as amended, signed by Consolidated Edison Development, Inc. (ConEd Development). The NEPOOL Agreement has been designated NEPOOL FPC No. 2.

The Participants Committee states that the Commission's acceptance of ConEd Development's signature page would permit NEPOOL to expand its membership to include ConEd Development. The Participants Committee further states that the filed signature page does not change the NEPOOL Agreement in any manner, other than to make ConEd Development a member in NEPOOL.

The Participants Committee requests an effective date of January 1, 2000, for commencement of participation in NEPOOL by ConEd Development.

Comment date: January 19, 2000, in accordance with Standard Paragraph E at the end of this notice.

24. New England Power Pool

[Docket No. ER00–969–000]

Take notice that on December 30, 1999, the New England Power Pool (NEPOOL) Participants Committee filed for acceptance a signature page to the New England Power Pool Agreement dated September 1, 1971, as amended, signed by Energy America, LLC (Energy America). The NEPOOL Agreement has been designated NEPOOL FPC No. 2.

The Participants Committee states that the Commission's acceptance of Energy America's signature page would permit NEPOOL to expand its membership to include Energy America. The Participants Committee further states that the filed signature page does not change the NEPOOL Agreement in any manner, other than to make Energy America a member in NEPOOL.

The Participants Committee requests an effective date of March 1, 2000, for commencement of participation in NEPOOL by Energy America.

Comment date: January 19, 2000, in accordance with Standard Paragraph E at the end of this notice.

25. The Toledo Edison Company

[Docket No. ER00–970–000]

Take note that on December 30, 1999, The Toledo Edison Company filed an Amendment to the Interconnection and Service Agreement Between The Toledo Edison Company and American Municipal Power-Ohio, Inc., Toledo Rate Schedule FERC No. 34, dated May 1, 1989 to unbundle the charges for generation and transmission services contained in Service Schedules A and J, and to make related changes in Service Schedules B and K.

Copies of the filing have been served on the Public Utilities Commission of Ohio.

Comment date: January 19, 2000, in accordance with Standard Paragraph E at the end of this notice.

26. New England Power Pool

[Docket No. ER00–972–000]

Take notice that on December 30, 1999, the New England Power Pool (NEPOOL), Participants Committee tendered for filing a Service Agreement for Through or Out Service or In Transmission Service pursuant to Section 205 of the Federal Power Act and 18 CFR 35.12 of the Commission's Regulations.

Acceptance of this Service Agreement will recognize the provision of Firm In Service transmission to Engage Energy US, L.P., in conjunction with Regional Network Service, in accordance with the provisions of the NEPOOL Open Access Transmission Tariff filed with the Commission on December 31, 1996, as amended and supplemented. An effective date of March 1, 2000 for commencement of transmission service has been requested. Copies of this filing were sent to all NEPOOL members, the New England public utility commissioners and all parties to the transaction.

Comment date: January 19, 2000, in accordance with Standard Paragraph E at the end of this notice.

27. New England Power Pool

[Docket No. ER00–973–000]

Take notice that on December 30, 1999, the New England Power Pool (NEPOOL), Participants Committee tendered for filing a Service Agreement for Through or Out Service or In Service pursuant to Section 205 of the Federal Power Act and 18 CFR 35.12 of the Commission's Regulations.

Acceptance of this Service Agreement will recognize the provision of Firm In

Service transmission to Morgan Stanley Capital Group Inc., in conjunction with Regional Network Service, in accordance with the provisions of the NEPOOL Open Access Transmission Tariff filed with the Commission on December 31, 1996, as amended and supplemented. An effective date of March 1, 2000 for commencement of transmission service has been requested. Copies of this filing were sent to all NEPOOL members, the New England public utility commissioners and all parties to the transaction.

Comment date: January 19, 2000, in accordance with Standard Paragraph E at the end of this notice.

28. New England Power Pool

[Docket No. ER00–974–000]

Take notice that on December 30, 1999, the New England Power Pool (NEPOOL), Participants Committee tendered for filing a Service Agreement for Through or Out Service or In Service by and between the NEPOOL Participants and Northeast Utilities Service Company on behalf of Select Energy, Inc. (Select Energy) pursuant to Section 205 of the Federal Power Act and 18 CFR 35.12 of the Commission's Regulations.

Acceptance of this Service Agreement will recognize the provision of Firm In Service transmission to Select Energy, in conjunction with Regional Network Service, in accordance with the provisions of the NEPOOL Open Access Transmission Tariff filed with the Commission on December 31, 1996, as amended and supplemented.

An effective date of January 1, 2000 for commencement of transmission service has been requested.

Copies of this filing were sent to all NEPOOL members, the New England public utility commissioners and all parties to the transaction.

Comment date: January 19, 2000, in accordance with Standard Paragraph E at the end of this notice.

29. Avista Corporation

[Docket No. ER00–976–000]

Take notice that on December 30, 1999, Avista Corporation (Avista Corp.), tendered for filing an agreement for the Assignment of Electric Generation Output of Former Portland General Electric Share of the Centralia Steam Generating Plant.

Comment date: January 19, 2000, in accordance with Standard Paragraph E at the end of this notice.

30. Potomac Electric Power Company

[Docket No. ER00–977–000]

Take notice that on December 30, 1999, Potomac Electric Power Company (Pepco), tendered for filing Amendment No. 1 to its 1998 agreement for electric service to its full requirements customer, Southern Maryland Electric Cooperative, Inc. (Smeco). The amendment provides reduced rates in the last year of service, the year 2000, to reflect Maryland tax law changes.

An effective date of January 1, 2000 for the revised rates is requested, with waiver of notice.

Comment date: January 19, 2000, in accordance with Standard Paragraph E at the end of this notice.

31. Bangor Hydro Electric Company

[Docket No. ER00–978–000]

Take notice that on December 30, 1999, Bangor Hydro-Electric Company tendered for filing Notices of Cancellation of its FERC Electric Rate Schedules Nos. 7 (Eastern Maine Electric Cooperative, Inc.), 27 (Swan's Island Electric Cooperative), and 52 (Isle Au Haut Electric Power Company) to be effective March 1, 2000.

Copies of the filing were served upon the affected purchasers, Swan's Island Electric Cooperative, Eastern Maine Electric Cooperative, Inc., Isle Au Haut Electric Power Company, the Maine Public Utilities Commission, and Maine Public Advocate.

Comment date: January 19, 2000, in accordance with Standard Paragraph E at the end of this notice.

32. Bangor Hydro-Electric Company

[Docket No. ER00–988–000]

Take notice that on December 30, 1999, Bangor Hydro-Electric Company (Bangor Hydro), tendered for filing a long-term service agreement with Morgan Stanley Capital Group, Inc., entered into pursuant Bangor Hydro's market-based rate authority granted to it in Docket No. ER99–1522–000.

Bangor Hydro requests an effective date of March 1, 2000 for the agreement.

Comment date: January 19, 2000, in accordance with Standard Paragraph E at the end of this notice.

33. ISO New England Inc.

[Docket No. ER00–996–000]

Take notice that on December 30, 1999, ISO New England Inc. (the ISO), tendered for filing a demonstration of need for extension through February 29, 2000 of price limitations for the NEPOOL Operable Capability Market during Operating Procedure 4 conditions.

Copies of said filing have been served upon the parties to this proceeding, and upon the Participants in the New England Power Pool, non-Participant transmission customers and to the New England State Governors and Regulatory Commissions.

Comment date: January 19, 2000, in accordance with Standard Paragraph E at the end of this notice.

34. Central Vermont Public Service Corporation

[Docket No. ER00–986–000]

Take notice that on January 3, 2000, Central Vermont Public Service Corporation tendered for filing a Network Integration Transmission Service Agreement and a Network Operating Agreement with New Hampshire electric Cooperative, Inc. The service Agreement supersedes a currently effective network service agreement.

Central Vermont requests that the service agreement and network operating agreement become effective on January 4, 2000, one day after they were filed.

Comment date: January 21, 2000, in accordance with Standard Paragraph E at the end of this notice.

35. Jersey Central Power & Light Company, Metropolitan Edison Company, Pennsylvania Electric Company

[Docket No. ER00–987–000]

Take notice that on January 3, 2000, Jersey Central Power & Light Company, Metropolitan Edison Company and Pennsylvania Electric Company (d/b/a GPU Energy), filed an executed Service Agreement between GPU Energy and Merrill Lynch Capital Services, Inc. (Merrill Lynch), dated December 30, 1999. This Service Agreement specifies that Merrill Lynch has agreed to the rates, terms and conditions of GPU Energy's Market-Based Sales Tariff (Sales Tariff) designated as FERC Electric Rate Schedule, Second Revised Volume No. 5. The Sales Tariff allows GPU Energy and Merrill Lynch to enter into separately scheduled transactions under which GPU Energy will make available for sale, surplus capacity and/or energy.

GPU Energy requests a waiver of the Commission's notice requirements for good cause shown and an effective date of December 30, 1999 for the Service Agreement.

GPU Energy has served copies of the filing on regulatory agencies in New Jersey and Pennsylvania.

Comment date: January 21, 2000, in accordance with Standard Paragraph E at the end of this notice.

36. American Electric Power Service Corporation Central and South West Services, Inc.

[Docket No. ER00–989–000]

Take notice that on January 3, 2000, American Electric Power Service Corporation (AEP) and Central and South West Services, Inc. (CSW) tendered for filing an amendment to the Open Access Transmission Tariff filed in this docket on April 30, 1998. The amendment would offer a new service-Network Contract Demand service in the East Zone.

AEP and CSW request that the amendment become effective upon the consummation of their proposed merger.

Copies of the filing have been served upon all parties to Docket Nos. EC98–40–000, ER98–2786–000 and ER98–2770–000, all of AEP's and CSW's transmission customers and the public service commissions of each of the eleven states in which AEP and CSW transact business.

Comment date: January 21, 2000, in accordance with Standard Paragraph E at the end of this notice.

Standard Paragraphs

E. Any person desiring to be heard or to protest such filing should file a motion to intervene or protest with the Federal Energy Regulatory Commission, 888 First Street, NE, Washington, DC 20426, in accordance with Rules 211 and 214 of the Commission's Rules of Practice and Procedure (18 CFR 385.211 and 385.214). All such motions or protests should be filed on or before the comment date. Protests will be considered by the Commission in determining the appropriate action to be taken, but will not serve to make protestants parties to the proceeding. Any person wishing to become a party must file a motion to intervene. Copies of these filings are on file with the Commission and are available for public inspection. This filing may also be viewed on the Internet at http://www.ferc.fed.us/online/rims.htm (call 202–208–2222 for assistance).

David P. Boergers,

Secretary.

[FR Doc. 00–816 Filed 1–12–00; 8:45 am]

BILLING CODE 6717–01–P

DEPARTMENT OF ENERGY

Federal Energy Regulatory Commission

[Docket No. CP00–34–000]

Algonquin Gas Transmission Corporation; Notice of Intent To Prepare an Environmental Assessment for the Proposed Fore River Project and Request for Comments on Environmental Issues

January 7, 2000.

The staff of the Federal Energy Regulatory Commission (FERC or Commission) will prepare an environmental assessment (EA) that will discuss the environmental impacts of the Fore River Project involving construction and operation of facilities by Algonquin Gas Transmission Corporation (Algonquin) in Norfolk County, Massachusetts.[1] These facilities would consist of about 7.4 miles of 24-inch-diameter pipeline and construction of measurement facilities. This EA will be used by the Commission in its decision-making process to determine whether the project is in the public convenience and necessity.

If you are a landowner receiving this notice, you may be contacted by a pipeline company representative about the acquisition of an easement to construct, operate, and maintain the proposed facilities. The pipeline company would seek to negotiate a mutually acceptable agreement. However, if the project is approved by the Commission, that approval conveys with it the right of eminent domain. Therefore, if easement negotiations fail to produce an agreement, the pipeline company could initiate condemnation proceedings in accordance with state law. A fact sheet addressing a number of typically asked questions, including the use of eminent domain, is attached to this notice as appendix 1.[2]

Summary of the Proposed Project

Algonquin proposes to construct facilities to provide transportation service of up to 140,000 dekatherms per day of natural gas for Sithe Power Marketing (Sithe). Sithe has requested firm natural gas transportation service to fuel the Fore River Station a 750-megawatt gas-fired electronic power plant being constructed near Weymouth, Massachusetts. Algonquin seeks authority to:

- Replace approximately 6.9 miles of existing 10-inch-diameter pipeline (I–3 Lateral) with 24-inch-diameter pipeline from milepost (MP) 0.0 in Canton, Massachusetts to MP 6.9 in Braintree, Massachusetts; and
- Construct a new 0.5-mile-long, 24-inch-diameter pipeline (I–9 Lateral) and measurement facilities in Braintree and Weymouth, Massachusetts.

The location of the project facilities is shown in appendix 2.

Land Requirements for Construction

Construction of the proposed facilities would require about 85.5 acres of land. Following construction, about 26.5 acres would be maintained as permanent right-of-way. The remaining 59 acres of land would be restored and allowed to revert to its former use.

The EA Process

The National Environmental Policy Act (NEPA) requires the Commission to take into account the environmental impacts that could result from an action whenever it considers the issuance of a Certificate of Public Convenience and Necessity. NEPA also requires us to discover and address concerns the public may have about proposals. We call this ''scoping.'' The main goal of the scoping process is to focus the analysis in the EA on the important environmental issues. By this Notice of Intent, the Commission requests public comments on the scope of the issues it will address in the EA. All comments received are considered during the preparation of the EA. State and local government representatives are encouraged to notify their constituents of this proposed action and encourage them to comment on their areas of concern.

The EA will discuss impacts that could occur as a result of the construction and operation of the proposed project under these general headings:

- Geology and soils
- Water resources, fisheries, and wetlands
- Vegetation and wildlife
- Hazardous waste
- Land use
- Cultural resources
- Endangered and threatened species
- Public safety

We will also evaluate possible alternatives to the proposed project or

[1] Algonquin's application was filed with the Commission under Section 7 of the Natural Gas Act and Part 157 of the Commission's regulations.

[2] The appendices referenced in this notice are not being printed in the **Federal Register**. Copies are available on the Commission's website at the ''RIMS'' link or from the Commission's Public Reference and Files Maintenance Branch, 888 First Street, NE, Washington, DC 20426, or call (202) 208–1371. For instructions on connecting to RIMS refer to the last page of this notice. Copies of the appendices were sent to all those receiving this notice in the mail.

portions of the project, and make recommendations on how to lessen or avoid impacts on the various resource areas.

Our independent analysis of the issues will be in the EA. Depending on the comments received during the scoping process, the EA may be published and mailed to Federal, state, and local agencies, public interest groups, interested individuals, affected landowners, newspapers, libraries, and the Commission's official service list for this proceeding. A comment period will be allotted for review if the EA is published. We will consider all comments on the EA before we make our recommendations to the Commission.

To ensure your comments are considered, please carefully follow the instructions in the public participation section beginning on page 4.

Currently Identified Environmental Issues

We have already identified several issues that we think deserve attention based on a preliminary review of the proposed facilities and the environmental information provided by Algonquin. This preliminary list of issues may be changed based on your comments and our analysis.

- The project would cross 31 wetlands and 25 streams.
- The project would be within 50 feet of 178 residences.
- The project may cross historic or prehistoric archeological sites.

Also, we have made a preliminary decision to not address the impacts of the nonjurisdictional facilities. Approval of the Sithe Energy Fore River Station is currently pending before the Massachusetts Energy Facilities Siting Board. We will identify the location, and its permit approval and/or construction status in the EA.

Public Participation

You can make a difference by providing us with your specific comments or concerns about the project. By becoming a commentor, your concerns will be addressed in the EA and considered by the Commission. You should focus on the potential environmental effects of the proposal, alternatives to the proposal (including alternative routes), and measures to aviod or lessen environmental impact. The more specific your comments, the more useful they will be. Please carefully follow these instructions to ensure that your comments are received in time and properly recorded:

- Send two copies of your letter to: David P. Boergers, Secretary Federal Energy Regulatory Commission, 888 First St., NE, Room 1A, Washington, DC 20426;
- Label one copy of the comments for the attention of the Environmental Review and Compliance Branch II, PR–11.2;
- Reference Docket No. CP00–34–000; and
- Mail your comments so that they will be received in Washington, DC on or before February 7, 2000.

Becoming an Intervenor

In addition to involvement in the EA scoping process, you may want to become an official party to the proceeding known as an ''intervenor.'' Intervenors play a more formal role in the process. Among other things, intervenors have the right to receive copies of case-related Commission documents and filings by other intervenors. Likewise, each intervenor must provide 14 copies of its filings to the Secretary of the Commission and must send a copy of its filings to all other parties on the Commission's service list for this proceeding. If you want to become an intervenor you must file a motion to intervene according to Rule 214 of the commission's Rules of Practice and Procedure (18 CFR 385.214) (see appendix 3). Only intervenors have the right to seek rehearing of the Commission's decision.

The date for filing timely motions to intervene in this proceeding has passed. Therefore, parties now seeking to file late interventions must show good cause, as required by section 385.214(b)(3), why this time limitation should be waived. Environmental issues have been viewed as good cause for late intervention.

You do not need intervenor status to have your environmental comments considered. Additional information about the proposed project is available from Mr. Paul McKee of the Commission's Office of External Affairs at (202) 208–1088 or on the FERC website (www.ferc.fed.us) using the ''RIMS'' link to information in this docket number. Click on the ''RIMS'' link, select ''Docket #'' from the RIMS Menu, and follow the instructions. For assistance with access to RIMS, the RIMS helpline can be reached at (202) 208–2222.

Similarly, the ''CIPS'' link on the FERC Internet website provides access to the texts of formal documents issued by the Commission, such as orders, notices, and rulemakings. From the FERC Internet website, click on the ''CIPS'' link, select ''Docket #'' from the CIPS menu, and follow the instructions. For assistance with access to CIPS, the CIPS helpline can be reached at (202) 208–2474.

Linmwood A. Watson, Jr.,

Acting Secretary.

[FR Doc. 00–785 Filed 1–12–00; 8:45 am]

BILLING CODE 6717–01–M

ENVIRONMENTAL PROTECTION AGENCY

[FRL–6522–8]

Agency Information Collection Activities: Proposed Collection; Comment Request; State Water Quality Program Management Gap Analysis

AGENCY: Environmental Protection Agency (EPA).

ACTION: Notice.

SUMMARY: In compliance with the Paperwork Reduction Act (44 U.S.C. 3501 *et seq.*), this document announces that EPA is planning to submit the following proposed Information Collection Request (ICR) to the Office of Management and Budget (OMB): Information Collection Request for the State Water Quality Program Management Gap Analysis. Before submitting the ICR to OMB for review and approval, EPA is soliciting comments on specific aspects of the proposed information collection as described below.

DATES: Comments must be submitted on or before March 13, 2000.

ADDRESSES: Public Comments. All public comments shall be submitted to: State Water Quality Program Management Gap Analysis ICR Comment Clerk (Mail Code 4201), Environmental Protection Agency, Office of Wastewater Management, Resource Management and Evaluation Staff, Ariel Rios Building, 1200 Pennsylvania Avenue, N.W., Washington, D.C. 20460. Commentors who want EPA to acknowledge receipt of their comments should enclose a self-addressed stamped envelope. Comments may also be submitted electronically to: crow.carol@epa.gov.

Interested persons may obtain a copy of the ICR and supporting analysis without charge by contacting the individual listed below.

FOR FURTHER INFORMATION CONTACT: Carol Crow, Telephone: (202) 260–6742, Facsimile Number: (202) 260–1156, E-mail: crow.carol@epa.gov.

SUPPLEMENTARY INFORMATION: Electronic comments must be submitted as an ASCII file avoiding the use of special characters and forms of encryption. Electronic comments must be identified

by the use of the words ''State Water Quality Program Management Gap Analysis ICR Comments.'' No confidential business information (CBI) should be submitted through e-mail. Comments and data will also be accepted on disks in Corel WordPerfect 8 format or ASCII file format. Electronic comments on this notice may be filed online at many Federal Depository Libraries.

The record for this proposed ICR has been established by the Office of Wastewater Management, Resource Management and Evaluation Staff and includes supporting documentation as well as printed, paper versions of electronic comments. It does not include any information claimed as CBI. The record is available for inspection from 9 a.m. to 4 p.m., Monday through Friday, excluding legal holidays, at the Environmental Protection Agency, Office of Wastewater Management, Resource Management and Evaluation Staff, Northeast Mall Room 2310, 401 M Street, S.W., Washington, D.C. 20460. For access to the docket materials, please call (202)–260–6742 to schedule an appointment.

Affected Entities: Entities potentially affected by this action are State governments. Major respondents are State governments.

Title: State Water Quality Program Management Gap Analysis.

Abstract: EPA, in partnership with States, is conducting the State Water Quality Management Gap Analysis to help enumerate current and future funding needs and to help identify innovative strategies for reducing resource gaps. To develop preliminary information in a short time frame, the Gap Analysis was divided into two phases. Phase I consisted of the development of a preliminary estimate of the national resource gap faced by water quality management programs to provide a general idea of the magnitude of the resource gap based on initial estimates provided by members of a State/EPA work group.

Phase II of the Gap Analysis involves developing a detailed, activity-based workload model to provide a common framework for States and EPA to estimate the resource needs necessary to assess specific water quality concerns. To complete the model and develop a realistic estimate, EPA's Office of Wastewater Management needs data on the resources needed from each individual State for water quality management activities.

This is a one time collection effort by the Office of Wastewater Management and responses to this ICR are voluntary. The collection is necessary to develop a detailed activity-based workload model that will provide an estimate of the resource gap facing water quality management programs. EPA will use the collected information to estimate resource needs for water quality management activities.

An agency may not conduct or sponsor, and a person is not required to respond to, a collection of information unless it displays a currently valid OMB control number. The OMB control numbers for EPA's regulations are listed in 40 CFR part 9 and 48 CFR Chapter 15.

EPA would like to solicit comments to:

(i) evaluate whether the proposed collection of information is necessary for the proper performance of the functions of the Agency, including whether the information will have practical utility;

(ii) evaluate the accuracy of the Agency's estimate of the burden of the proposed collection of information, including the validity of the methodology and assumptions used;

(iii) enhance the quality, utility, and clarity of the information to be collected; and

(iv) minimize the burden of the collection of information on those who are to respond, including through the use of appropriate automated electronic, mechanical, or other technological collection techniques or other forms of information technology, e.g., permitting electronic submission of responses.

Burden Statement: The annual public reporting burden for this collection of information is estimated to average 180.5 hours per State respondent. Approximately 20 States are expected to respond to this information collection request, for a total estimated annual burden of 3,602.5 hours and a total estimated cost of $144,100. The total estimated burden for this information collection activity, including the Agency, is 4,141 hours nationally; the estimated total cost is $165,117. There are no record keeping requirements.

Burden means the total time, effort, or financial resources expended by persons to generate, maintain, retain, or disclose or provide information to or for a Federal agency. This includes the time needed to review instructions; develop, acquire, install, and utilize technology and systems for the purposes of collecting, validating, and verifying information, processing and maintaining information, and disclosing and providing information; adjust the existing ways to comply with any previously applicable instructions and requirements; train personnel to be able to respond to a collection of information; search data sources; complete and review the collection of information; and transmit or otherwise disclose the information.

Dated: January 6, 2000.

Michael B. Cook,

Director, Office of Wastewater Management.

[FR Doc. 00–848 Filed 1–12–00; 8:45 am]

BILLING CODE 6560–50–P

ENVIRONMENTAL PROTECTION AGENCY

[OPPTS–00274A; FRL–6487–8]

Voluntary Children's Health Chemical Testing Program; Cancellation of Public Meeting

AGENCY: Environmental Protection Agency (EPA).

ACTION: Notice; cancellation of public meeting.

SUMMARY: The public meeting on the Voluntary Children's Health Chemical Testing Program scheduled for January 19-20, 2000, is canceled. This meeting was announced in the **Federal Register** of August 26, 1999 (64 FR 46673) (FRL–6089–1), and was intended to be the third public meeting in a Stakeholder Involvement Process to develop a voluntary program to test commercial chemicals to which children have a high likelihood of exposure. On a future date, EPA will announce a new date for the third stakeholder meeting and will describe how that meeting will be conducted.

FOR FURTHER INFORMATION CONTACT: *For general information contact*: Joseph S. Carra, Deputy Director, Office of Pollution Prevention and Toxics (7401), Environmental Protection Agency, Ariel Rios Bldg., 1200 Pennsylvania Ave., NW., Washington, DC 20460; telephone numbers: (202) 554–1404 and TDD: (202) 260–1730; e-mail address: TSCA-Hotline@epa.gov.

For technical information contact: Ward Penberthy, Office of Pollution Prevention and Toxics, Chemical Control Division (7405), Environmental Protection Agency, Ariel Rios Bldg., 1200 Pennsylvania Ave., NW., Washington, DC 20460; telephone number: (202) 260–0508; e-mail address: chem.rtk@epa.gov.

SUPPLEMENTARY INFORMATION:

I. Does this Notice Apply to Me?

This action is directed to the public in general. This action may, however, be of interest to those persons who are or may be required to conduct testing of chemical substances under the Toxic Substances Control Act (TSCA),

individuals or groups concerned with chemical testing and children's health, or animal welfare groups. Since other entities may also be interested, the Agency has not attempted to describe all the specific entities that may be affected by this action. If you have any questions regarding the applicability of this action to a particular entity, consult the technical person listed under ''FOR FURTHER INFORMATION CONTACT.''

II. How Can I Get Additional Information, Including Copies of this Document or Other Related Documents?

1. *Electronically*. You may obtain electronic copies of this document, and certain other related documents that might be available electronically, from the EPA Internet Home Page at http://www.epa.gov/. To access this document, on the Home Page select ''Laws and Regulations'' and then look up the entry for this document under the ''**Federal Register**--Environmental Documents.'' You can also go directly to the **Federal Register** listings at http://www.epa.gov/fedrgstr/.

To access information about the Voluntary Children's Health Chemical Testing Program go to the website address: http://www.epa.gov/chemrtk/childhlt.htm. For information on the first and second stakeholder meetings go to the website address: http://www.epa.gov/chemrtk and select ''Meeting Archives.''

2. *In person*. The Agency has established an official record for the Stakeholder Involvement Process for the Voluntary Children's Health Chemical Testing Program under docket control number OPPTS–00274. The record consists of public comments received during past comment periods, and other information related to the Voluntary Children's Health Chemical Testing Program. This record includes the documents that are physically located in the docket, as well as the documents that are referenced in those documents. The public version of the record, which includes printed, paper versions of any electronic comments that may be submitted during an applicable comment period, is available for inspection in the TSCA Nonconfidential Information Center, North East Mall, Rm. B–607, 401 M St., SW., Washington, DC. The Center is open from noon to 4 p.m., Monday through Friday, excluding legal holidays. The telephone number of the Center is (202) 260–7099.

List of Subjects

Environmental protection, Chemicals, Children, Hazardous substances, Health and safety.

Dated: January 10, 2000.

William H. Sanders III.

Director, Office of Pollution Prevention and Toxics.

[FR Doc. 00–861 Filed 1–10–00; 3:44 pm]

BILLING CODE 6560–50–F

ENVIRONMENTAL PROTECTION AGENCY

[OPPTS–211044; FRL–6487–7]

TSCA Section 21 Petition; Notice of Receipt

AGENCY: Environmental Protection Agency (EPA).

ACTION: Notice.

SUMMARY: This notice announces receipt of a petition submitted by five organizations under section 21 of the Toxic Substances Control Act (TSCA), and requests comments on the petition. The organizations have petitioned EPA to initiate rulemaking proceedings with respect to all chemicals included on the HPV (high production volume chemical) Challenge Program list as updated through the date of initiation of the requested proceedings for: The issuance of a TSCA section 8(a) Preliminary Assessment Information Reporting (PAIR) rule and issuance of a Health and Safety Data Reporting rule under TSCA section 8(d). The petitioners further petition that ''[s]uch rule should neither be limited to participants in the Challenge Program nor exclude substances or mixtures as to which a participant has enrolled in the Program.'' Under TSCA section 21, the Agency must respond to the petition by March 28, 2000.

DATES: Comments should be received on or before February 3, 2000. The Agency will accept comments received after that date, but cannot guarantee that they will be considered prior to preparing its response to the petition.

ADDRESSES: Comments may be submitted by mail, electronically, or in person. Please follow the detailed instructions for each method as provided in Unit I. of ''SUPPLEMENTARY INFORMATION.'' To ensure proper receipt by EPA, it is imperative that you identify docket control number OPPTS–211044 in the subject line on the first page of your response.

FOR FURTHER INFORMATION CONTACT: *For general information contact*: Joseph S. Carra, Deputy Director, Office of Pollution Prevention and Toxics (7401), Environmental Protection Agency, Ariel Rios Bldg., 1200 Pennsylvania Ave., NW., Washington, DC 20460; telephone numbers: (202) 554-1404 and TDD: (202) 554-0551; e-mail address: TSCA-Hotline@epa.gov.

For technical information contact: Frank Kover, Chemical Control Division (7405), Office of Pollution Prevention and Toxics, Environmental Protection Agency, Ariel Rios Bldg., 1200 Pennsylvania Ave., NW., Washington, DC 20460; telephone number: (202) 260–3946; e-mail address: ccd.citb@epa.gov.

SUPPLEMENTARY INFORMATION:

I. General Information

A. Does this Action Apply to Me?

This action is directed to the public in general. This action may, however, be of interest to chemical manufacturers (including importers). Since other entities may also be interested, the Agency has not attempted to describe all the specific entities that may be affected by this action. If you have any questions regarding the applicability of this action to a particular entity, consult the technical person listed under ''FOR FURTHER INFORMATION CONTACT.''

B. How Can I Get Additional Information, Including Copies of this Document or Other Related Documents?

1. *Electronically*. You may obtain electronic copies of this document, and certain other related documents that might be available electronically, from the EPA Internet Home Page at http://www.epa.gov/. To access this document, on the Home Page select ''Laws and Regulations'' and then look up the entry for this document under the ''**Federal Register**—Environmental Documents.'' You can also go directly to the **Federal Register** listings at http://www.epa.gov/fedrgstr/. In addition, the petition may also be accessed on EPA's homepage at http://www.epa.gov/chemrtk/sc21main.htm.

2. *In person*. The Agency has established an official record for this action under docket control number OPPTS–211044. The official record consists of the documents specifically referenced in this action, any public comments received during an applicable comment period, and other information related to this action, including any information claimed as confidential business information (CBI). This official record includes the documents that are physically located in the docket, as well as the documents that are referenced in those documents. The public version of the official record does not include any information claimed as CBI. The public version of the official record, which includes printed, paper versions of any electronic comments submitted during

an applicable comment period, is available for inspection in the TSCA Nonconfidential Information Center, North East Mall Rm. B–607, Waterside Mall, 401 M St., SW., Washington, DC. The Center is open from noon to 4 p.m., Monday through Friday, excluding legal holidays. The telephone number for the Center is (202) 260–7099.

C. How and to Whom Do I Submit Comments?

You may submit comments through the mail, in person, or electronically. To ensure proper receipt by EPA, it is imperative that you identify docket control number OPPTS–211044 in the subject line on the first page of your response.

1. *By mail.* Submit your comments to: Document Control Office (7407), Office of Pollution Prevention and Toxics (OPPT), Environmental Protection Agency, Ariel Rios Bldg., 1200 Pennsylvania Ave., NW., Washington, DC 20460, Attention: Docket Number OPPTS-211044.

2. *In person or by courier.* Deliver your comments to: OPPT Document Control Office (DCO) in East Tower Rm. G–099, Waterside Mall, 401 M St., SW., Washington, DC. The DCO is open from 8 a.m. to 4 p.m., Monday through Friday, excluding legal holidays. The telephone number for the DCO is (202) 260–7093.

3. *Electronically.* You may submit your comments electronically by e-mail to: ''oppt.ncic@epa.gov,'' or mail your computer disk to the address identified above. Do not submit any information electronically that you consider to be CBI. Electronic comments must be submitted as an ASCII file avoiding the use of special characters and any form of encryption. Comments and data will also be accepted on standard disks in WordPerfect 6.1/8.0 or ASCII file format. All comments in electronic form must be identified by docket control number OPPTS–211044. Electronic comments may also be filed online at many Federal Depository Libraries.

D. How Should I Handle CBI Information That I Want To Submit to the Agency?

Do not submit any information electronically that you consider to be CBI. You may claim information that you submit to EPA in response to this document as CBI by marking any part or all of that information as CBI. Information so marked will not be disclosed except in accordance with procedures set forth in 40 CFR part 2. In addition to one complete version of the comment that includes any information claimed as CBI, a copy of the comment that does not contain the information claimed as CBI must be submitted for inclusion in the public version of the official record. Information not marked confidential will be included in the public version of the official record without prior notice. If you have any questions about CBI or the procedures for claiming CBI, please consult the technical person identified under ''FOR FURTHER INFORMATION CONTACT.''

E. What Should I Consider as I Prepare My Comments for EPA?

We invite you to provide your views on the relief sought by the petitioners, and any data or information that you would like the Agency to consider in developing its response to the petition. You may find the following suggestions helpful for preparing your comments:

1. Explain your views as clearly as possible.
2. Describe any assumptions that you used.
3. Provide copies of any technical information and/or data you used that support your views.
4. If you estimate potential burden or costs, explain how you arrived at the estimate that you provide.
5. Provide specific examples to illustrate your concerns.
6. Make sure to submit your comments by the deadline in this notice.
7. To ensure proper receipt by EPA, be sure to identify the docket control number assigned to this action in the subject line on the first page of your response. You may also provide the name, date, and **Federal Register** citation.

II. Background

A. What is a TSCA section 21 petition?

Section 21 of TSCA allows citizens to petition EPA to initiate a proceeding for the issuance, amendment, or repeal of a rule under TSCA section 4, 6, or 8 or an order under section 5(e) or 6(b)(2). A TSCA section 21 petition must set forth facts which the petitioner believes establish the need for the action requested. EPA is required to grant or deny the petition within 90 days of its receipt. If EPA grants the petition, the Agency must promptly commence an appropriate proceeding. If EPA denies the petition, the Agency must publish its reasons for the denial in the **Federal Register**. Within 60 days of denial or no action, petitioners may commence a civil action in a U.S. district court to compel initiation of the requested rulemaking. When reviewing a petition for a new rule, as in this case, the court must provide an opportunity for *de novo* review of the petition. After hearing the evidence, the court can order EPA to initiate the requested action.

B. What action is requested under this TSCA section 21 petition?

On December 27, 1999, EPA received a TSCA section 21 petition from five organizations. The organizations have petitioned EPA to initiate rulemaking proceedings with respect to all chemicals included on the HPV Challenge Program list as updated through the date of initiation of the requested proceedings for: The issuance of a TSCA section 8(a) PAIR rule and issuance of a Health and Safety Data Reporting rule under TSCA section 8(d). The petitioners further petition that ''[s]uch rule should neither be limited to participants in the Challenge Program nor exclude substances or mixtures as to which a participant has enrolled in the Program.'' Under TSCA section 21, the Agency must respond to the petition by March 28, 2000.

Petitioners' request for rules under TSCA sections 8(a) and 8(d) is based in part upon assertions that rules requiring the submission of existing data provide a better implementation approach for the HPV Challenge Program and TSCA section 4 HPV test rule(s) than the approach currently utilized, namely, voluntary submission of existing data in connection with the HPV Challenge or as comments to the proposed HPV rule(s) under TSCA section 4. EPA has commenced a review of this petition. Comments on the petition may be submitted by any of the methods identified in Unit I.

List of Subjects

Environmental protection.

Dated: January 7, 2000.

Charles M. Auer,

Director, Chemical Control Division, Office of Pollution Prevention and Toxics.

[FR Doc. 00–850 Filed 1–12–00; 8:45 am]

BILLING CODE 6560–50–F

ENVIRONMENTAL PROTECTION AGENCY

[FRL–6521–8]

Final NPDES General Permit for Discharges From Ready-Mixed Concrete Plants, Concrete Products Plants and Their Associated Facilities in Texas (TXG110000)

AGENCY: Environmental Protection Agency (EPA).

ACTION: Final issuance of NPDES general permit.

SUMMARY: EPA Region 6 today issues a National Pollutant Discharge Elimination System (NPDES) general permit authorizing discharges of facility waste water and contact storm water from ready-mixed concrete plants, concrete products plants and their associated facilities in Texas. This permit covers facilities having Standard Industrial Classification (SIC) Codes 3273 (manufacture of Ready-Mixed Concrete), 3272 (manufacture of concrete products, except block and brick) and 3271 (manufacture of concrete block and brick). This permit does not authorize the discharge of domestic sewage.

The permit has limits on Oil and Grease, Total Suspended Solids and pH. There is also a requirement of no acute toxicity as determined by requiring greater than 50 % survival in 100 % effluent using a 24 hour acute test. In addition, the permit has limits on arsenic, barium, cadmium, chromium, copper, manganese, mercury, nickel, selenium, silver and zinc as contained in Texas Natural Resource Conservation Commission (TNRCC) Regulations for Hazardous Metals (30 TAC 319, Subchapter B). There is also the requirement to develop and implement a pollution prevention plan for the storm water discharges authorized by this permit.

DATES: The limits and monitoring requirements in this permit shall become effective on February 14, 2000.

FOR FURTHER INFORMATION CONTACT: Ms. Evelyn Rosborough, EPA Region 6, 1445 Ross Avenue, Dallas, Texas 75202–2733, telephone (214) 665–7515. Copies of the complete response to comments may be obtained from Ms. Rosborough. The complete response to comments and final permit can also be found on the Internet at http://www.epa.gov/earth1r6/6wq/6wq.htm.

SUPPLEMENTARY INFORMATION: Regulated categories and entities include:

Category	Examples of regulated entities
Industry	Operators of ready-mixed concrete plants, concrete products plants and their associated facilities.

This table is not intended to be exhaustive, but rather provides a guide for readers regarding entities likely to be regulated by this action. This table lists the types of entities that EPA is now aware could potentially be regulated by this action. Other types of entities not listed in the table could also be regulated. To determine whether your (facility, company, business, organization, *etc.*) is regulated by this action, you should carefully examine the applicability criteria in Part I, Section A.1 of this permit. If you have questions regarding the applicability of this action to a particular entity, consult the person listed in the preceding **FOR FURTHER INFORMATION CONTACT** section.

Pursuant to section 402 of the Clean Water Act (CWA), 33 U.S.C. section 1342, EPA proposed and solicited public comment on NPDES General Permit TXG110000 at 63 FR 40279 (July 28, 1998). The comment period closed on September 28, 1998. Region 6 received written comments from Texas Natural Resources Conservation Commission (TNRCC) and Texas Aggregates & Concrete Association.

EPA Region 6 has considered all comments received. In response to the comments, EPA agrees to reduce the monitoring frequency for the 24 hour acute toxicity requirement from twice per year to once per year, and to allow a facility with multiple storm water outfalls discharging substantially identical storm water effluents to collect and analyze an effluent sample for one of those outfalls and report that the data also applies to the other substantially identical outfalls. In addition, the time period for existing dischargers to submit Notices of Intent to be covered by this permit was extended to within 90 days of the permit's effective date. The permit was also updated to reflect that, since TNRCC has now assumed NPDES authority for these types of discharges, Notices of Intent to be covered by this permit and Discharge Monitoring Reports are to be sent to TNRCC instead of EPA. At the request of TNRCC, Discharge Monitoring Report submission requirements were changed from annually to quarterly.

Other Legal Requirements

A. State Certification

Under section 401(a)(1) of the Act, EPA may not issue an NPDES permit until the State in which the discharge will originate grants or waives certification to ensure compliance with appropriate requirements of the Act and State law. The Region has received certification, dated August 27, 1998, from the Texas Natural Resources Conservation Commission for NPDES General Permit TXG110000.

B. Endangered Species Act

EPA has determined that issuance of this general permit is unlikely to adversely affect any threatened or endangered species or its critical habitat. EPA sought written concurrence from the United States Fish and Wildlife Service on this determination. In a letter dated September 2, 1998, the United States Fish and Wildlife Service concurred with EPA's finding that issuance of this general permit is not likely to adversely affect any federally listed species, provided that two general concerns were addressed in the permit. The first concern was in regard to the 24-hour acute testing requirement. The Service was concerned that the permit language does not specify as to how test organisms, daphnia pulex and the fathead minnow, are used in testing. The Service stated that the permit should state that testing of the effluent requires both species and that failure with either species beyond the 50% survival in 100% effluent would constitute failure. The second concern was that the permit should include language that permittees located in counties overlying the San Antonio and Barton Springs portion of the Edwards Aquifer (Kinney, Travis, Williamson, Uvalde, Medina, Bexar, Blanco, Hays, and Comal Counties) must consult the Edwards Aquifer Rules (30 TAC Chapter 213) and its amendments. In response to the Service's concerns, a requirement has been added to the Part I.C of the final permit requiring compliance with 30 TAC 213 (Edwards Aquifer Rules). The requirements for 24-hour acute testing contained in Part I.C and I.F of the permit already address the Service's concern regarding the 24 hour acute testing requirement.

C. Coastal Coordination Act

Pursuant to Section 506.20 of 31 TAC of the Coastal Coordination Act, the Texas Coastal Coordination Council has reviewed the permit for consistency with the Texas Coastal Management Program. The Council has determined that the permit is consistent with the Texas Coastal Management Program goals and policies.

D. Historic Preservation Act

Facilities which adversely affect properties listed or eligible for listing in the National Register of Historical Places are not authorized to discharge under this permit.

E. Economic Impact (Executive Order 12866)

Under Executive Order 12866 [58 FR 51735 (October 4, 1993)], the Agency must determine whether a regulatory action is ''significant'' and therefore subject to OMB review and the requirements of the Executive Order. The Order defines ''significant regulatory action'' as one that is likely

to result in a rule that may have an annual effect on the economy of $100 million or more or adversely affect in a material way the economy, a sector of the economy, productivity, competition, jobs, the environment, public health or safety, or State, local, or tribal governments or communities; create a serious inconsistency or otherwise interfere with an action taken or planned by another agency; materially alter the budgetary impact of entitlements, grants, user fees, or loan programs or the rights and obligations of recipients thereof; or raise novel legal or policy issues arising out of legal mandates, the President's priorities, or the principles set forth in the Executive Order. EPA has determined that this general permit is not a ''significant regulatory action'' under the terms of Executive Order 12866 and is therefore not subject to formal OMB review prior to proposal.

F. Paperwork Reduction Act

The information collection required by this permit has been approved by OMB under the provisions of the Paperwork Reduction Act, 44 U.S.C. 3501 *et seq.*, in submission made for the NPDES permit program and assigned OMB control numbers 2040–0086 (NPDES permit application) and 2040–0004 (discharge monitoring reports).

G. Unfunded Mandates Reform Act

Section 201 of the Unfunded Mandates Reform Act (UMRA), Public Law 104–4, generally requires Federal agencies to assess the effects of their ''regulatory actions'' on State, local, and tribal governments and the private sector. UMRA uses the term ''regulatory actions'' to refer to regulations. (*See*, e.g., UMRA section 201, ''Each agency shall * * * assess the effects of Federal regulatory actions * * * (other than to the extent that such regulations incorporate requirements specifically set forth in law)'' (emphasis added)). UMRA section 102 defines ''regulation'' by reference to section 658 of Title 2 of the U.S. Code, which in turn defines ''regulation'' and ''rule'' by reference to section 601(2) of the Regulatory Flexibility Act (RFA). That section of the RFA defines ''rule'' as ''any rule for which the agency publishes a notice of proposed rulemaking pursuant to section 553(b) of [the Administrative Procedure Act (APA)], or any other law * * *''

NPDES general permits are not ''rules'' under the APA and thus not subject to the APA requirement to publish a notice of proposed rulemaking. NPDES general permits are also not subject to such a requirement under the CWA. While EPA publishes a notice to solicit public comment on draft general permits, it does so pursuant to the CWA section 402(a) requirement to provide ''an opportunity for a hearing.'' Thus, NPDES general permits are not ''rules'' for RFA or UMRA purposes.

EPA thinks it is unlikely that this permit issuance would contain a Federal requirement that might result in expenditures of $100 million or more for State, local and tribal governments, in the aggregate, or the private sector in any one year.

The Agency also believes that the permit issuance would not significantly nor uniquely affect small governments. For UMRA purposes, ''small governments'' is defined by reference to the definition of ''small governmental jurisdiction'' under the RFA. (*See* UMRA section 102(1), referencing 2 U.S.C. 658, which references section 601(5) of the RFA.) ''Small governmental jurisdiction'' means governments of cities, counties, towns, etc., with a population of less than 50,000, unless the agency establishes an alternative definition.

The permit issuance also will not uniquely affect small governments because compliance with the proposed permit conditions affects small governments in the same manner as any other entities seeking coverage under the permit.

H. Regulatory Flexibility Act

The Regulatory Flexibility Act, 5 U.S.C. 601 *et seq*, requires that EPA prepare a regulatory flexibility analysis for regulations that have a significant impact on a substantial number of small entities. Compliance with the permit requirements will not result in a significant impact on dischargers, including small businesses, covered by this permit. EPA Region 6 therefore concludes that issuance of this permit will not have a significant impact on a substantial number of small entities.

Authorization To Discharge Under the National Pollutant Discharge Elimination System

In compliance with the provisions of the Federal Water Pollution Control Act, as amended (33 U.S.C. 1251 et seq: the ''Act''), this permit authorizes discharges to Waters of the United States of facility waste water and contact storm water from ready-mixed concrete plants, concrete products plants and their associated facilities in Texas. The discharges are authorized in accordance with effluent limitations and other conditions set forth in Parts I and II of this permit.

In order for discharges to be authorized by this permit, operators of facilities discharging waste waters from ready-mixed concrete plants, concrete products plants and their associated facilities must submit written notification to the Regional Administrator that they intend to be covered (See Part I.A.2). For existing discharges, the notification must be submitted no later than 90 days after the effective date of this permit. For new dischargers, the notification must be submitted at least 30 days prior to the beginning of a discharge. Unless otherwise notified in writing by the Regional Administrator after submission of the notification, operators requesting coverage are authorized to discharge under this general permit. Operators who fail to notify the Regional Administrator of intent to be covered are not authorized to discharge under this general permit.

Facilities which adversely affect properties listed or eligible for listing in the National Register of Historic Places are not authorized to discharge under this permit.

This permit shall become effective at midnight, Central Time on February 14, 2000.

This permit and the authorization to discharge shall expire at midnight, Central Time on February 14, 2005.

Signed this 23rd day of December, 1999.

William B. Hathaway,

Director, Water Quality Protection Division, EPA Region 6.

Part I.

Section A. Permit Applicability and Coverage Conditions

1. Discharges Covered

This permit covers discharges of facility waste water and contact storm water from ready-mixed concrete plants, concrete products plants and their associated facilities in Texas. This permit covers facilities having Standard Industrial Classification (SIC) Codes 3273 (manufacture of Ready-Mixed Concrete), 3272 (manufacture of concrete products, except block and brick) and 3271 (manufacture of concrete block and brick). This permit does not authorize the discharge of domestic sewage.

Ready-mixed concrete plants are facilities, including temporary concrete batch plants, primarily engaged in mixing and delivering ready-mixed concrete as classified by SIC Code 3273.

Concrete products plants are facilities primarily engaged in manufacturing concrete products as classified by SIC Code 3272, and facilities primarily

engaged in manufacturing concrete building blocks and bricks from a combination of cement and aggregate as classified by SIC Code 3271.

Associated facilities are facilities associated with ready-mixed concrete plants or concrete products plants and establishments where maintenance and washing of ready-mix vehicles (both interior and exterior) or equipment occurs.

Contact storm water means storm water which comes in contact with any raw material, product, by-product, co-product, intermediate or waste material.

Domestic sewage means waterborne human or animal waste and waste from domestic activities, such as washing, bathing and food preparation.

Facility waste water means any waste water which is generated at ready-mixed concrete plants, concrete products plants or associated facilities authorized by this permit, but not including domestic sewage.

2. Notice of Intent (NOI) To Be Covered

Dischargers desiring coverage under this general NPDES permit must submit a Notice of Intent (NOI) which shall include the legal name and address of the operator, the location of the discharge (including the street address, if applicable, and the county of the facility for which the notification is submitted), the name of the receiving water, and a description of the facility(s) (ready-mixed concrete and/or concrete products plant and associated facilities, whether contact storm water is discharged). This NOI must be submitted within 90 days of the effective date of this permit for existing discharges and, for new discharges, at least 30 days before beginning the discharge.

NOI's must be submitted on a form provided by TNRCC. The form may be obtained by telephoning Mr. Charles Eanes at (512) 239-4563, or by writing Mr. Eanes at the following address: Mr. Charles Eanes, MC–148, Texas Natural Resources Conservation Commission, P.O. Box 13087, Austin, Texas 78711–3087.

Upon receipt of the notification, TNRCC will notify the facility of its specific facility identification number that must be used on all correspondence with the Commission.

3. Termination of Operations

When all discharges associated with activities authorized by this permit are eliminated, or when the operator of the discharge associated with activity at a facility changes, the operator of the facility must submit a Notice of Termination that is signed in accordance with Part II.D.11 of this permit. The Notice of Termination shall include the following information: legal name, mailing address and telephone number of the operator; the facility identification number assigned by the Agency; and the location of the discharge.

Section B. Individual Permits

1. Any operator authorized by this permit may request to be excluded from the coverage under this general permit by applying for an individual permit. The operator shall submit an application together with the reasons supporting the request to the Executive Director of TNRCC.

2. When an individual NPDES permit is issued to an operator otherwise subject to this general permit, the applicability of the general permit to the permittee is automatically terminated on the effective date of the individual permit.

Section C. General Permit Limits

Parameter	Daily max limit	Sample type	Monitoring frequency
Flow	N/A	Estimate	1/month.
Oil and Grease	15 mg/l	Grab	1/month.
Total Suspended Solids	65 mg/l	Grab	1/month.
pH	6.0–9.0 Std. Units	Grab	1/month.

	Monthly average limit	Daily max limit	Single grab limit
Arsenic(1)	.1 mg/l	.2 mg/l	.3 mg/l
Barium(1)	1.0 mg/l	2.0 mg/l	4.0 mg/l
Cadmium(1) (Inland Waters)	.05 mg/l	.1 mg/l	.2 mg/l
Cadmium(1) (Tidal Waters)	.1 mg/l	.2 mg/l	.3 mg/l
Chromium(1)	.5 mg/l	1.0 mg/l	5.0 mg/l
Copper(1)	.5 mg/l	1.0 mg/l	2.0 mg/l
Lead(1)	.5 mg/l	1.0 mg/l	1.5 mg/l
Manganese(1)	1.0 mg/l	2.0 mg/l	3.0 mg/l
Mercury(1)	.005 mg/l	.005 mg/l	.01 mg/l
Nickel(1)	1.0 mg/l	2.0 mg/l	3.0 mg/l
Selenium(1) (Inland Waters)	.05 mg/l	.1 mg/l	.2 mg/l
Selenium(1) (Tidal Waters)	.1 mg/l	.2 mg/l	.3 mg/l
Silver(1)	.05 mg/l	.1 mg/l	.2 mg/l
Zinc(1)	1.0 mg/l	2.0 mg/l	6.0 mg/l

(1) Monitoring frequency shall be a minimum of once per year using grab samples. See Section I.D of this permit.

There shall be no acute toxicity as determined by requiring greater than 50% survival in 100% effluent using a 24 hour acute test. See Section I.F of this permit. Monitoring shall be a minimum of once per year using grab samples. See Section I.D of this permit.

Permittees are prohibited from causing or allowing any activity pursuant to this permit which would be in violation of Title 30 Texas Administrative Code, Chapter 213 (Edwards Aquifer rules).

Section D. Monitoring at Substantially Identical Storm Water Outfalls

Note: The requirements of this section apply to storm water only outfalls. They do not apply to outfalls containing facility waste water.

When a facility has two or more storm water outfalls that, based on a consideration of industrial activity, significant materials, and management practices and activities within the area drained by the outfall, the permittee reasonable believes discharge

substantially identical effluents, the permittee may test the effluent of one of such outfalls and report that the quantitative data also applies to the substantialy identical outfalls provided that the permittee includes in the storm water pollution prevention plan a description of the location of the outfalls and explains in detail why the outfalls are expected to discharge substantially identical effluents. In addition, for each outfall that the permittee believes is representative, an estimate of the size of the drainage area (in square feet) and an estimate of the runoff coefficient of the drainage area (*e.g.,* low (under 40%), medium (40 to 65 %), or high (above 65%)) shall be provided in the plan. The permittee shall include the description of the location of the outfalls, explanation of why outfalls are expected to discharge substantially identical effluents, and estimate of the size of the drainage area and runoff coefficient with the Discharge Monitoring Report.

Section E. Pollution Prevention Plan

A Pollution Prevention Plan shall be prepared and implemented for each facility covered by this permit which discharges contact storm water. The plan shall identify potential sources of pollution that may reasonably be expected to affect the quality of contact storm water discharges from the facility. In addition, the plan shall describe and ensure the implementation of practices that are to be used to reduce the pollutants in contact storm water discharges at the facility and to assure compliance with the terms and conditions of this permit. Facilities must implement the provisions of the storm water pollution prevention plan as a condition of this permit. The plan shall be signed in accordance with Part II of the permit (Signatory Requirements) and be retained onsite at the facility that generates the storm water discharge in accordance with Part II (Retention of Records) of the permit.

The Director, or authorized representative, may notify the permittee at any time that the plan does not meet one or more of the minimum requirements of this permit. Such notification shall identify those provisions of the permit that are not being met by the plan, and identify which provisions of the plan requires modifications in order to meet the minimum requirements of this part. Within 30 days of such notification, the permittee shall make the required changes to the plan and shall submit to the Director a written certification that the requested changes have been made.

The permittee shall amend the plan whenever there is a change in design, construction, operation, or maintenance, that has a significant effect on the potential for the discharge of pollutants to waters of the United States or if the storm water pollution prevention plan proves to be ineffective in eliminating or significantly minimizing pollutants from sources identified in the contents of the plan, or in otherwise achieving the general objectives of controlling pollutants in the contact storm water discharges.

The plan shall include, at a minimum, the following items:

1. Pollution Prevention Team. Each plan shall identify a specific individual or individuals within the facility organization as members of a storm water Pollution Prevention Team that are responsible for developing the storm water pollution prevention plan and assisting the facility or plant manager in its implementation, maintenance and revision. The plan shall clearly identify the responsibilities of each team member. The activities and responsibilities of the team shall address all aspects of the facility's storm water pollution prevention plan.

2. Description of Potential Pollutant Sources. Each plan shall provide a description of potential sources that may reasonably be expected to add significant amounts of pollutants to storm water discharges or that may result in the discharge of pollutants during dry weather from separate storm sewers draining the facility. Each plan shall identify all activities and significant materials that may potentially be significant pollutant sources. Each plan shall include, at a minimum:

a. Drainage. (i) A site map indicating an outline of the portions of the drainage area of each storm water outfall that are within the facility boundaries, each existing structural control measure to reduce pollutants in storm water runoff, surface water bodies, locations where significant materials are exposed to precipitation, locations where major spills or leaks identified under Part c (Spills and Leaks), below, have occurred, and the locations of the following activities where such activities are exposed to precipitation: Fueling stations, vehicle and equipment maintenance and/or cleaning areas, loading/unloading areas, locations used for the treatment, storage or disposal of wastes, liquid storage tanks, processing areas and storage areas. Facilities shall also identify, on the site map, the location of any: Bag house or other dust control device; recycle/sedimentation pond, clarifier or other device used for the treatment of process wastewater and the areas that drain to the treatment device. The map must indicate the outfall locations and the types of discharges contained in the drainage areas of the outfalls.

(ii) For each area of the facility that generates contact storm water discharges with a reasonable potential for containing significant amounts of pollutants, a prediction of the direction of flow, and an identification of the types of pollutants that are likely to be present in the storm water discharges. Factors to consider include the toxicity of chemical; quantity of chemicals used, produced or discharged; the likelihood of contact with storm water; and history of significant leaks or spills of toxic or hazardous pollutants. Flows with a significant potential for causing erosion shall be identified.

b. Inventory of Exposed Materials. An inventory of the types of materials handled at the site that potentially may be exposed to precipitation. Such inventory shall include a narrative description of significant materials that have been handled, treated, stored or disposed in a manner to allow exposure to storm water between the time of 3 years prior to the date of the submission of a Notice of Intent (NOI) to be covered under this permit and the present; method and location of onsite storage or disposal; materials management practices employed to minimize contact of materials with storm water runoff between the time of 3 years prior to the date of the submission of a Notice of Intent (NOI) to be covered under this permit and the present; the location and a description of existing structural and nonstructural control measures to reduce pollutants in storm water runoff; and a description of any treatment the storm water receives.

c. Spills and Leaks. A list of significant spills and significant leaks of toxic or hazardous pollutants that occurred at areas that are exposed to precipitation or that otherwise drain to a storm water conveyance at the facility after the date of 3 years prior to the date of the submission of a Notice of Intent (NOI) to be covered under this permit. Such list shall be updated as appropriate during the term of the permit.

d. Sampling Data. A summary of existing discharge sampling data describing pollutants in storm water discharges from the facility, including a summary of sampling data collected during the term of this permit.

e. Risk Identification and Summary of Potential Pollutant Sources. A narrative description of the potential pollutant sources from the following activities:

Loading and unloading operations, outdoor storage activities, outdoor manufacturing or processing activities, significant dust or particulate generating processes, and onsite waste disposal practices. The description shall specifically list any significant potential source of pollutants at the site and, for each potential source, any pollutant or pollutant parameter (for example, Total Suspended Solids (TSS), etc.) of concern shall be identified.

3. Measures and Controls. Each facility covered by this permit shall develop a description of storm water management controls appropriate for the facility, and implement such controls. The appropriateness and priorities of controls in a plan shall reflect identified potential sources of pollutants at the facility. The description of storm water management controls shall address the following minimum components, including a schedule for implementing such controls:

a. Good Housekeeping. Good housekeeping requires the maintenance of areas that may contribute pollutants to storm water discharges in a clean, orderly manner.

(i) Facilities shall prevent or minimize the discharge of spilled cement, aggregate (including sand or gravel), settled dust or other significant materials in storm water from paved portions of the site that are exposed to storm water. Measures used to minimize the presence of these materials may include regular sweeping, or other equivalent measures. The plan shall indicate the frequency of sweeping or other measures. The frequency shall be determined based upon consideration of the amount of industrial activity occurring in the area and frequency of precipitation, but shall not be less than once per week when cement or aggregate is being handled or otherwise processed in the area.

(ii) Facilities shall prevent the exposure of fine granular solids such as cement to storm water. Where practicable, these materials shall be stored in enclosed silos, hoppers or buildings, in covered areas, or under covering.

b. Preventive Maintenance. A preventive maintenance program shall involve routine inspection and maintenance of storm water management devices (for example, cleaning oil/water separators, catch basins) as well as inspecting and testing facility equipment and systems to uncover conditions that could cause breakdowns or failures resulting in discharges of pollutants to surface waters, and ensuring appropriate maintenance of such equipment and systems.

c. Spill Prevention and Response Procedures. Areas where potential spills that can contribute pollutants to storm water discharges can occur, and their accompanying drainage points, shall be identified clearly in the storm water pollution prevention plan. Where appropriate, specifying material handling procedures, storage requirements, and use of equipment such as diversion valves in the plan should be considered. Procedures for cleaning up spills shall be identified in the plan and made available to the appropriate personnel. The necessary equipment to implement a clean up should be available to personnel.

d. Inspections. Qualified facility personnel shall be identified to inspect designated equipment and areas of the facility specified in the plan. The inspection frequency shall be specified in the plan based upon a consideration of the level of industrial activity at the facility, but shall be a minimum of once per month while the facility is in operation. The inspection shall take place while the facility is in operation and shall at a minimum include all of the following areas that are exposed to storm water at the site: Material handling areas, above ground storage tanks, hoppers or silos, dust collection/ containment systems, truck wash down and equipment cleaning areas. Tracking or follow-up procedures shall be used to ensure that appropriate actions are taken in response to the inspections. Records of inspections shall be maintained.

e. Employee Training. Employee training programs shall inform personnel responsible for implementing activities identified in the storm water pollution prevention plan or otherwise responsible for storm water management at all levels of responsibility of the components and goals of the storm water pollution prevention plan. Training should address topics such as spill response, good housekeeping, truck wash out procedures, equipment wash down procedures and material management practices. The pollution prevention plan shall identify periodic dates for such training.

f. Record Keeping and Internal Reporting Procedures. A description of incidents (such as spills, or other discharges), along with other information describing the quality and quantity of storm water discharges shall be included in the plan required under this part. Inspections and maintenance activities shall be documented and records of such activities shall be incorporated into the plan.

g. Sediment and Erosion Control. The plan shall identify areas that, due to topography, activities, or other factors, have a high potential for significant soil erosion, and identify structural, vegetative, and/or stabilization measures to be used to limit erosion.

h. Management of Runoff. The plan shall contain a narrative consideration of the appropriateness of traditional storm water management practices (practices other than those that control the generation or source(s) of pollutants) used to divert, infiltrate, reuse, or otherwise manage storm water runoff in a manner that reduces pollutants in storm water discharges from the site. The plan shall provide that measures that the permittee determines to be reasonable and appropriate shall be implemented and maintained. The potential of various sources at the facility to contribute pollutants to storm water discharges (see Item 2 of this section—Description of Potential Pollutant Sources) shall be considered when determining reasonable and appropriate measures. Appropriate measures may include: reuse of collected storm water (such as for a process or as an irrigation source), inlet controls (such as oil/water separators), snow management activities, infiltration devices, and wet detention/retention devices or other equivalent measures.

4. Comprehensive Site Compliance Evaluation. Qualified personnel shall conduct site compliance evaluations at appropriate intervals specified in the plan, but, in no case less than once a year. Such evaluations shall provide:

a. Areas contributing to contact storm water discharges, including but not limited to: material handling areas, above ground storage tanks, hoppers or silos, dust collection/ containment systems, truck wash down and equipment. Cleaning areas shall be visually inspected for evidence of, or the potential for, pollutants entering the drainage system. Measures to reduce pollutant loadings shall be evaluated to determine whether they are adequate and properly implemented in accordance with the terms of the permit or whether additional control measures are needed. Structural storm water management measures, sediment and erosion control measures, and other structural pollution prevention measures, such as recycle ponds, identified in the plan shall be observed to ensure that they are operating correctly. A visual inspection of equipment needed to implement the plan, such as spill response equipment, shall be made.

b. Based on the results of the evaluation, the description of potential

pollutant sources identified in the plan in accordance with Item 2 of this section (Description of Potential Pollutant Sources) and pollution prevention measures and controls identified in the plan in accordance with Item 3 of this section (Measures and Controls) shall be revised as appropriate within 2 weeks of such evaluation and shall provide for implementation of any changes to the plan in a timely manner, but in no case more than 12 weeks after the evaluation.

c. A report summarizing the scope of the evaluation, personnel making the evaluation, the date(s) of the evaluation, major observations relating to the implementation of the storm water pollution prevention plan, and actions taken in accordance with Item 4.b, above, shall be made and retained as part of the storm water pollution prevention plan for at least 3 years after the date of the evaluation. The report shall identify any incidents of noncompliance. Where a report does not identify any incidents of noncompliance, the report shall contain a certification that the facility is in compliance with the storm water pollution prevention plan and this permit. The report shall be signed in accordance with signatory requirements of the permit.

d. Where compliance evaluation schedules overlap with inspections required under Item 3.d, above, the compliance evaluation may be conducted in place of one such inspection.

Section F. Whole Effluent Toxicity Testing

24-Hour Acute Testing for Discharges into Fresh Receiving Waters

1. Scope and Methodology

a. The following test species shall be used:

Daphnia pulex and *pimephales promelas* (Fathead minnow) acute static nonrenewal 24-hour toxicity tests. Use ''Methods for Measuring the Acute Toxicity of Effluents and Receiving Waters to Freshwater and Marine Organisms'' (EPA/600/4–90/027F) or the latest update thereof. A minimum of 5 replicates with 8 organisms per replicate must be used in the control and in each effluent dilution of this test.

b. The permittee shall test the effluent for lethality in accordance with the provisions of this section. Such testing will determine if an effluent sample meets the requirement of greater than 50% survival of the appropriate test organisms in 100% effluent for a 24-hour period.

c. The permittee shall submit the results of these tests on the Discharge Monitoring Report.

d. In addition to an appropriate control (0% effluent), a 100% effluent concentration shall be used in the toxicity tests.

2. Required Toxicity Testing Conditions

a. Control/dilution water—Control and/or dilution water used in the test shall normally consist of a standard, synthetic, moderately hard, reconstituted water of similar pH and alkalinity to the closest downstream perennial water.

b. Control Survival—If more than 10% of the test organisms in any control die within 24 hours, that test including the control and the 100% effluent shall be repeated with all results from both tests reported as required in Item 3, below, of this section.

c. The permittee shall repeat a test, including the control and all effluent dilutions, if the procedures and quality assurance requirements defined in the test methods or in this permit are not satisfied. A repeat test shall be conducted within the required reporting period of any test determined to be invalid, in accordance with Item 2.b of this section.

d. Sample Collection and Preservation—Samples shall be collected at a point following the last treatment unit. One flow-weighted composite sample representative of normal operating flows will be collected from each outfall, and a discrete test will be run on each composite sample. Samples shall be chilled to 4 degrees Centigrade during collection, shipping, and/or storage. The toxicity tests must be initiated within 36 hours after collection of the sample. The composite sample must be collected such that the sample is representative of any periodic episode of chlorination, biocide usage, or other potentially toxic substance discharged on an intermittent basis.

3. Reporting

a. The permittee shall prepare a full report of the results of all tests conducted pursuant to this Part in accordance with the Report Preparation section of EPA/600/4–90/027F for every valid or invalid toxicity test initiated, whether carried to completion or not. The permittee shall retain each full report pursuant to the provisions of Part II.C.3 of this permit. The permittee shall submit the information contained in any full report upon the specific request of the Agency.

b. The permittee shall report the following results of each toxicity test on the DMR in accordance with Part II.D.4 of this permit:

For *pimephales promelas* (Parameter No. TIE6D) and for daphnia pulex (Parameter No. TIE3D) enter the following codes on the DMR:

''0'' if mean survival at 24 hours is greater than 50% in 100% effluent;

''1'' if the mean survival at 24 hours is less than or equal to 50% in 100% effluent.

24-Hour Acute Testing for Discharges Into Marine Receiving Waters

1. Scope and Methodology

a. The following test species shall be used:

Mysidopsis bahia (Mysid shrimp) and *menidia beryllina* (Inland Silverside minnow) acute static nonrenewal 24-hour toxicity test. Use ''Methods for Measuring the Acute Toxicity of Effluents and Receiving Waters to Freshwater and Marine Organisms'' (EPA/600/4–90/027F) or the latest update thereof. A minimum of 5 replicates with 8 organisms per replicate must be used in the control and in each effluent dilution of this test.

b. The permittee shall test the effluent for lethality in accordance with the provisions of this section. Such testing will determine if an effluent sample meets the requirement of greater than 50% survival of the appropriate test organisms in 100% effluent for a 24-hour period.

c. The permittee shall submit the results of these tests on the Discharge Monitoring Report.

d. In addition to an appropriate control (0% effluent), a 100% effluent concentration shall be used in the toxicity tests.

2. Required Toxicity Testing Conditions

a. Control/dilution water—Control and/or dilution water used in the test shall normally consist of a standard, synthetic, reconstituted seawater.

b. Control Survival—If more than 10% of the test organisms in any control die within 24 hours, that test including the control and the 100% effluent shall be repeated with all results from both tests reported as required in Item 3, below, of this section.

c. Repeat Test—the permittee shall repeat a test, including the control and all effluent dilutions, if the procedures and quality assurance requirements defined in the test methods or in this permit are not satisfied. A repeat test shall be conducted within the required reporting period of any test determined to be invalid, in accordance with Item 2.b of this section.

d. Sample Collection and Preservation—Samples shall be

collected at a point following the last treatment unit. One flow-weighted composite sample representative of normal operating flows will be collected from each outfall, and a discrete test will be run on each composite sample. Samples shall be chilled to 4 degrees Centigrade during collection, shipping, and/or storage. The toxicity tests must be initiated within 36 hours after collection of the sample. The composite sample must be collected such that the sample is representative of any periodic episode of chlorination, biocide usage, or other potentially toxic substance discharged on an intermittent basis.

3. Reporting

a. The permittee shall prepare a full report of the results of all tests conducted pursuant to this Part in accordance with the Report Preparation section of EPA/600/4–90/027F for every valid or invalid toxicity test initiated, whether carried to completion or not. The permittee shall retain each full report pursuant to the provisions of Part II.C.3 of this permit. The permittee shall submit the information contained in any full report upon the specific request of the Agency.

b. The permittee shall report the following results of each toxicity test on the DMR in accordance with Part II.D.4 of this permit:

For menidia beryllina (Parameter No. TIE6B) and mysidopsis bahia (Parameter No. TIE3E), enter the following codes on the DMR:

''0'' if mean survival at 24 hours is greater than 50% in 100% effluent;

''1'' if the mean survival at 24 hours is less than or equal to 50% in 100% effluent.

Part II

Section A. General Conditions

1. Introduction

In accordance with the provisions of 40 CFR Part 122.41, *et. seq.,* this permit incorporates by reference ALL conditions and requirements applicable to NPDES Permits set forth in the Clean Water Act, as amended, (hereinafter known as the ''Act'') as well as ALL applicable regulations.

2. Duty To Comply

The permittee must comply with all conditions of this permit. Any permit noncompliance constitutes a violation of the Act and is grounds for enforcement action, for terminating coverage under this permit, or for requiring a permittee to apply for and obtain an individual NPDES permit.

3. Toxic Pollutants

a. Notwithstanding Part II.A.4, if any toxic effluent standard or prohibition (including any schedule of compliance specified in such effluent standard or prohibition) is promulgated under Section 307(a) of the Act for a toxic pollutant which is present in the discharge and that standard or prohibition is more stringent than any limitation on the pollutant in this permit, this permit shall be modified or revoked and reissued to conform to the toxic effluent standard or prohibition.

b. The permittee shall comply with effluent standards or prohibitions established under Section 307(a) of the Act for toxic pollutants within the time provided in the regulations that established those standards or prohibitions, even if the permit has not yet been modified to incorporate the requirement.

4. Permit Flexibility

This permit may be modified, revoked and reissued, or terminated for cause in accordance with 40 CFR 122.62–64. The filing of a request for a permit modification, revocation and reissuance, or termination, or a notification of planned changes or anticipated noncompliance, does not stay any permit condition.

5. Property Rights

This permit does not convey any property rights of any sort, or any exclusive privilege.

6. Duty To Provide Information

The permittee shall furnish to the Director, within a reasonable time, any information which the Director may request to determine whether cause exists for modifying, revoking and reissuing, or terminating this permit, or to determine compliance with this permit. The permittee shall also furnish to the Director, upon request, copies of records required to be kept by this permit.

7. Criminal and Civil Liability

Except as provided in permit conditions on ''Bypassing'' and ''Upsets'', nothing in this permit shall be construed to relieve the permittee from civil or criminal penalties for noncompliance. Any false or materially misleading representation or concealment of information required to be reported by the provisions of the permit, the Act, or applicable regulations, which avoids or effectively defeats the regulatory purpose of the Permit may subject the Permittee to criminal enforcement pursuant to 18 U.S.C. 1001.

8. Oil and Hazardous Substance Liability

Nothing in this permit shall be construed to preclude the institution of any legal action or relieve the permittee from any responsibilities, liabilities, or penalties to which the permittee is or may be subject under Section 311 of the Act.

9. State Laws

Nothing in this permit shall be construed to preclude the institution of any legal action or relieve the permittee from any responsibilities, liabilities, or penalties established pursuant to any applicable State law or regulation under authority preserved by Section 510 of the Act.

10. Severability

The provisions of this permit are severable, and if any provision of this permit or the application of any provision of this permit to any circumstance is held invalid, the application of such provision to other circumstances, and the remainder of this permit, shall not be affected thereby.

B. Proper Operation and Maintenance

1. Need To Halt or Reduce Not a Defense

It shall not be a defense for a permittee in an enforcement action that it would have been necessary to halt or reduce the permitted activity in order to maintain compliance with the conditions of this permit. The permittee is responsible for maintaining adequate safeguards to prevent the discharge of untreated or inadequately treated wastes during electrical power failure either by means of alternate power sources, standby generators or retention of inadequately treated effluent.

2. Duty To Mitigate

The permittee shall take all reasonable steps to minimize or prevent any discharge in violation of this permit which has a reasonable likelihood of adversely affecting human health or the environment.

3. Proper Operation and Maintenance

a. The permittee shall at all times properly operate and maintain all facilities and systems of treatment and control (and related appurtenances) which are installed or used by permittee as efficiently as possible and in a manner which will minimize upsets and discharges of excessive pollutants and will achieve compliance with the conditions of this permit. Proper operation and maintenance also

includes adequate laboratory controls and appropriate quality assurance procedures. This provision requires the operation of backup or auxiliary facilities or similar systems which are installed by a permittee only when the operation is necessary to achieve compliance with the conditions of this permit.

b. The permittee shall provide an adequate operating staff which is duly qualified to carry out operation, maintenance and testing functions required to insure compliance with the conditions of this permit.

4. Bypass of Treatment Facilities

a. Bypass Not Exceeding Limitations

The permittee may allow any bypass to occur which does not cause effluent limitations to be exceeded, but only if it also is for essential maintenance to assure efficient operation. These bypasses are not subject to the provisions of Parts II.B.4.b. and 4.c.

b. Notice

(1) Anticipated Bypass

If the permittee knows in advance of the need for a bypass, it shall submit prior notice, if possible at least ten days before the date of the bypass.

(2) Unanticipated Bypass

The permittee shall, within 24 hours, submit notice of an unanticipated bypass as required in Part II.D.7.

c. Prohibition of Bypass

(1) Bypass is prohibited, and the Director may take enforcement action against a permittee for bypass, unless:

(a) Bypass was unavoidable to prevent loss of life, personal injury, or severe property damage;

(b) There were no feasible alternatives to the bypass, such as the use of auxiliary treatment facilities, retention of untreated wastes, or maintenance during normal periods of equipment downtime. This condition is not satisfied if adequate back-up equipment should have been installed in the exercise of reasonable engineering judgment to prevent a bypass which occurred during normal periods of equipment downtime or preventive maintenance; and,

(c) The permittee submitted notices as required by Part II.B.4.b.

(2) The Director may allow an anticipated bypass after considering its adverse effects, if the Director determines that it will meet the three conditions listed at Part II.B.4.c(1).

5. Upset Conditions

a. Effect of an Upset

An upset constitutes an affirmative defense to an action brought for noncompliance with such technology-based permit effluent limitations if the requirements of Part II.B.5.b. are met. No determination made during administrative review of claims that noncompliance was caused by upset, and before an action for noncompliance, is final administrative action subject to judicial review.

b. Conditions Necessary for a Demonstration of Upset

A permittee who wishes to establish the affirmative defense of upset shall demonstrate, through properly signed, contemporaneous operating logs, or other relevant evidence that:

(1) An upset occurred and that the permittee can identify the cause(s) of the upset;

(2) The permitted facility was at the time being properly operated;

(3) The permittee submitted notice of the upset as required by Part II.D.7; and,

(4) The permittee complied with any remedial measures required by Part II.B.2.

c. Burden of Proof

In any enforcement proceeding, the permittee seeking to establish the occurrence of an upset has the burden of proof.

6. Removed Substances

Unless otherwise authorized, solids, sewage sludges, filter backwash, or other pollutants removed in the course of treatment or waste water control shall be disposed of in a manner such as to prevent any pollutant from such materials from entering navigable waters.

C. Monitoring and Records

1. Inspection and Entry

The permittee shall allow the Director, or an authorized representative, upon the presentation of credentials and other documents as may be required by the law to:

a. Enter upon the permittee's premises where a regulated facility or activity is located or conducted, or where records must be kept under the conditions of this permit;

b. Have access to and copy, at reasonable times, any records that must be kept under the conditions of this permit;

c. Inspect at reasonable times any facilities, equipment (including monitoring and control equipment), practices or operations regulated or required under this permit; and

d. Sample or monitor at reasonable times, for the purpose of assuring permit compliance or as otherwise authorized by the Act, any substances or parameters at any location.

2. Representative Sampling

Samples and measurements taken for the purpose of monitoring shall be representative of the monitored activity.

3. Retention of Records

The permittee shall retain records of all monitoring information, including all calibration and maintenance records and all original strip chart recordings for continuous monitoring instrumentation, copies of all reports required by this permit, and records of all data used to complete the application for this permit, for a period of at least 3 years from the date of the sample, measurement, report, or application. This period may be extended by request of the Director at any time.

4. Record Contents

Records of monitoring information shall include:

a. The date, exact place, and time of sampling or measurements;

b. The individual(s) who performed the sampling or measurements;

c. The date(s) and time(s) analyses were performed;

d. The individual(s) who performed the analyses;

e. The analytical techniques or methods used; and

f. The results of such analyses.

5. Monitoring Procedures

a. Monitoring must be conducted according to test procedures approved under 40 CFR Part 136, unless other test procedures have been specified in this permit or approved by the Regional Administrator.

b. The permittee shall calibrate and perform maintenance procedures on all monitoring and analytical instruments at intervals frequent enough to insure accuracy of measurements and shall maintain appropriate records of such activities.

c. An adequate analytical quality control program, including the analyses of sufficient standards, spikes, and duplicate samples to insure the accuracy of all required analytical results shall be maintained by the permittee or designated commercial laboratory.

D. Reporting Requirements

1. Planned Changes

The permittee shall give notice to the Director as soon as possible of any planned physical alterations or additions to the permitted facility. Notice is required only when:

a. The alteration or addition to a permitted facility may meet one of the criteria for determining whether a facility is a new source in 40 CFR part 122.29(b); or,

b. The alteration or addition could significantly change the nature or increase the quantity of pollutants discharged. This notification applies to pollutants which are subject neither to effluent limitations in the permit, nor to notification requirements listed at part II.D.10.a.

2. Anticipated Noncompliance

The permittee shall give advance notice to the Director of any planned changes in the permitted facility or activity which may result in noncompliance with permit requirements.

3. Transfers

Coverage under these permits is not transferable to any person except after notice to the Director.

4. Discharge Monitoring Reports and Other Reports

The discharger shall report all analytical results on a Discharge Monitoring Report (DMR) Form (EPA Form 3320–1) in accordance with the ''General Instructions'' provided on the form. Results of sampling activities shall be submitted to the TNRCC's Enforcement Division (MC–224) on a quarterly basis and should arrive by the 20th day in the months of April, July, October and January. The permittee shall submit the original DMR signed and certified as required by Part II.D.11 and all other reports required by Part II.D. to the TNRCC at the following address: Texas Natural Resources Conservation Commission, Attn: Water Quality Management Information Systems Team, MC–224, P.O. Box 13087, Austin, Texas 78711–3087.

5. Additional Monitoring by the Permittee

If the permittee monitors any pollutant more frequently than required by this permit, using test procedures approved under 40 CFR part 136 or as specified in this permit, the results of this monitoring shall be included in the calculation and reporting of the data submitted in the Discharge Monitoring Report (DMR). Such increased monitoring frequency shall also be indicated on the DMR.

6. Averaging of Measurements

Calculations for all limitations which require averaging of measurements shall utilize an arithmetic mean unless otherwise specified by the Director in the permit.

7. Twenty-Four Hour Reporting

a. The permittee shall report any noncompliance which may endanger health or the environment. Any information shall be provided orally to the EPA Region 6 24-hour voice mail box telephone number 214–665–6593 within 24 hours from the time the permittee becomes aware of the circumstances. A written submission shall be provided within 5 days of the time the permittee becomes aware of the circumstances. The report shall contain the following information:

(1) A description of the noncompliance and its cause;

(2) The period of noncompliance including exact dates and times, and if the noncompliance has not been corrected, the anticipated time it is expected to continue; and,

(3) Steps being taken to reduce, eliminate, and prevent recurrence of the noncomplying discharge.

b. The following shall be included as information which must be reported within 24 hours:

(1) Any unanticipated bypass which exceeds any effluent limitation in the permit;

(2) Any upset which exceeds any effluent limitation in the permit; and,

(3) Violation of a maximum daily discharge limitation for any pollutants listed by the Director in Part II of the permit to be reported within 24 hours.

c. The Director may waive the written report on a case-by-case basis if the oral report has been received within 24 hours.

8. Other Noncompliance

The permittee shall report all instances of noncompliance not reported under Parts II.D.4 and D.7 and Part I.C at the time monitoring reports are submitted. The reports shall contain the information listed at Part II.D.7.

9. Other Information

Where the permittee becomes aware that it failed to submit any relevant facts in a permit application, or submitted incorrect information in a permit application or in any report to the Director, it shall promptly submit such facts or information.

10. Changes in Discharges of Toxic Substances

The permittee shall notify the Director as soon as it knows or has reason to believe:

a. That any activity has occurred or will occur which would result in the discharge, on a routine or frequent basis, of any toxic pollutant listed at 40 CFR part 122, Appendix D, Tables II and III (excluding Total Phenols) which is not limited in the permit, if that discharge will exceed the highest of the following ''notification levels'':

(1) One hundred micrograms per liter (100 ug/L);

(2) Two hundred micrograms per liter (200 ug/L) for acrolein and acrylonitrile; five hundred micrograms per liter (500 ug/L) for 2,4-dinitro-phenol and for 2-methyl-4,6-dinitrophenol; and one milligram per liter (1 mg/L) for antimony;

(3) Five (5) times the maximum concentration value reported for that pollutant in the permit application; or

(4) The level established by the Director.

b. That any activity has occurred or will occur which would result in any discharge, on a non routine or infrequent basis, of a toxic pollutant which is not limited in the permit, if that discharge will exceed the highest of the following ''notification levels'':

(1) Five hundred micrograms per liter (500 ug/L);

(2) One milligram per liter (1 mg/L) for antimony;

(3) Ten (10) times the maximum concentration value reported for that pollutant in the permit application; or

(4) The level established by the Director.

11. Signatory Requirements

All applications, reports, or information submitted to the Director shall be signed and certified.

a. all permit applications shall be signed as follows:

(1) by a responsible corporate officer. For the purpose of this section, a responsible corporate officer means:

(a) A president, secretary, treasurer, or vice-president of the corporation in charge of a principal business function, or any other person who performs similar policy or decision making functions for the corporation; or,

(b) For a Corporation—The manager of one or more manufacturing, production, or operating facilities employing more than 250 persons or having gross annual sales or expenditures exceeding $25 million (in second-quarter 1980 dollars), if authority to sign documents has been

assigned or delegated to the manager in accordance with corporate procedures.

(2) For a Partnership or Sole Proprietorship—by a general partner or the proprietor, respectively.

b. All Reports required by the permit and other information requested by the Director shall be signed by a person described above or by a duly authorized representative of that person. A person is a duly authorized representative only if:

(1) The authorization is made in writing by a person described above;

(2) The authorization specifies either an individual or a position having responsibility for the overall operation of the regulated facility or activity, such as the position of plant manager, operator of a well or a well field, superintendent, or position of equivalent responsibility, or an individual or position having overall responsibility for environmental matters for the company. A duly authorized representative may thus be either a named individual or an individual occupying a named position; and,

(3) The written authorization is submitted to the Director.

c. Certification

Any person signing a document under this section shall make the following certification:

''I certify under penalty of law that this document and all attachments were prepared under my direction or supervision in accordance with a system designed to assure that qualified personnel properly gather and evaluate the information submitted. Based on my inquiry of the person or persons who manage the system, or those persons directly responsible for gathering the information, the information submitted is, to the best of my knowledge and belief, true, accurate, and complete. I am aware that there are significant penalties for submitting false information, including the possibility of fine and imprisonment for knowing violations.''

12. Availability of Reports

Except for applications, effluent data, permits, and other data specified in 40 CFR 122.7, any information submitted pursuant to this permit may be claimed as confidential by the submitter. If no claim is made at the time of submission, information may be made available to the public without further notice.

E. Penalties for Violations of Permit Conditions

1. Criminal

a. Negligent Violations. The Act provides that any person who negligently violates permit conditions implementing Section 301, 302, 306, 307, 308, 318, or 405 of the Act is subject to a fine of not less than $2,500 nor more than $25,000 per day of violation, or by imprisonment for not more than 1 year, or both.

b. Knowing Violations. The Act provides that any person who knowingly violates permit conditions implementing Sections 301, 302, 306, 307, 308, 318, or 405 of the Act is subject to a fine of not less than $5,000 nor more than $50,000 per day of violation, or by imprisonment for not more than 3 years, or both.

c. Knowing Endangerment. The Act provides that any person who knowingly violates permit conditions implementing Sections 301, 302, 303, 306, 307, 308, 318, or 405 of the Act and who knows at that time that he is placing another person in imminent danger of death or serious bodily injury is subject to a fine of not more than $250,000, or by imprisonment for not more than 15 years, or both.

d. False Statements. The Act provides that any person who knowingly makes any false material statement, representation, or certification in any application, record, report, plan, or other document filed or required to be maintained under the Act or who knowingly falsifies, tampers with, or renders inaccurate, any monitoring device or method required to be maintained under the Act, shall upon conviction, be punished by a fine of not more than $10,000, or by imprisonment for not more than 2 years, or by both. If a conviction of a person is for a violation committed after a first conviction of such person under this paragraph, punishment shall be by a fine of not more than $20,000 per day of violation, or by imprisonment of not more than 4 years, or by both. (See Section 309.c.4 of the Clean Water Act)

2. Civil Penalties

The Act provides that any person who violates a permit condition implementing Sections 301, 302, 306, 307, 308, 318, or 405 of the Act is subject to a civil penalty not to exceed $27,500 per day for each violation.

3. Administrative Penalties

The Act provides that any person who violates a permit condition implementing Sections 301, 302, 306, 307, 308, 318, or 405 of the Act is subject to an administrative penalty, as follows:

a. Class I Penalty. Not to exceed $11,000 per violation nor shall the maximum amount exceed $27,500.

b. Class II Penalty. Not to exceed $11,000 per day for each day during which the violation continues nor shall the maximum amount exceed $137,500.

F. Definitions

All definitions contained in Section 502 of the Act shall apply to this permit and are incorporated herein by reference. Unless otherwise specified in this permit, additional definitions of words or phrases used in this permit are as follows:

1. *Act* means the Clean Water Act (33 U.S.C. 1251 et. seq.), as amended.

2. *Administrator* means the Administrator of the U.S. Environmental Protection Agency.

3. *Applicable effluent standards and limitations* means all state and Federal effluent standards and limitations to which a discharge is subject under the Act, including, but not limited to, effluent limitations, standards or performance, toxic effluent standards and prohibitions, and pretreatment standards.

4. *Applicable water quality standards* means all water quality standards to which a discharge is subject under the Act.

5. *Associated facilities* means facilities, including temporary concrete batch plants, primarily engaged in mixing and delivering ready-mixed concrete as classified by SIC Code 3273.

6. *Bypass* means the intentional diversion of waste streams from any portion of a treatment facility.

7. *Concrete products plants* means facilities primarily engaged in manufacturing concrete products as classified by SIC Code 3272, and facilities primarily engaged in manufacturing concrete building blocks and bricks from a combination of cement and aggregate as classified by SIC Code 3271.

8. *Contact storm water* means storm water which comes in contact with any raw material, product, by-product, co-product intermediate or waste material.

9. *Daily max* discharge limitation means the highest allowable ''daily discharge'' during the calendar month.

10. *Director* means the Executive Director of TNRCC or an authorized representative.

11. *Domestic sewage* means waterborne human or animal waste and waste from domestic activities, such as washing, bathing and food preparation.

12. *Environmental protection agency* means the U.S. Environmental Protection Agency.

13. *Facility* (as defined in 40 CFR 122.2) means any NPDES ''point source'' or any other facility or activity

that is subject to regulation under the NPDES program.

14. *Facility waste water* means any waste water which is generated at ready-mixed concrete plants, concrete products plants or associated facilities, but not including domestic sewage.

15. *Grab sample* means an individual sample collected in less than 15 minutes.

16. *National pollutant discharge elimination system* means the national program for issuing, modifying, revoking and reissuing, terminating, monitoring and enforcing permits, and imposing and enforcing pretreatment requirements, under Sections 307, 318, 402, and 405 of the Act.

17. *Ready-mixed concrete plants* means facilities, including temporary concrete batch plants, primarily engaged in mixing and delivering ready-mixed concrete as classified by SIC Code 3273.

18. *Severe property damage* means substantial physical damage to property, damage to the treatment facilities which causes them to become inoperable, or substantial and permanent loss of natural resources which can reasonably be expected to occur in the absence of a bypass. Severe property damage does not mean economic loss caused by delays in production.

19. *Upset* means an exceptional incident in which there is unintentional and temporary noncompliance with technology-based permit effluent limitations because of factors beyond the reasonable control of the permittee. An upset does not include noncompliance to the extent caused by operational error, improperly designed treatment facilities, inadequate treatment facilities, lack of preventive maintenance, or careless or improper operation.

20. The term ''MGD'' shall mean million gallons per day.

21. The term ''mg/L'' shall mean milligrams per liter or parts per million (ppm).

[FR Doc. 00–733 Filed 1–12–00; 8:45 am]

BILLING CODE 6560–50–P

FEDERAL COMMUNICATIONS COMMISSION

[DA 99–2792]

Public Safety National Coordination Committee

AGENCY: Federal Communications Commission.

ACTION: Notice.

SUMMARY: This document advises interested persons of a meeting of the Public Safety National Coordination Committee (''NCC''), which will be held in San Francisco, California. The Federal Advisory Committee Act, Public Law 92–463, as amended, requires public notice of all meetings of the NCC. This notice advises interested persons of the sixth meeting of the Public Safety National Coordination Committee.

DATES: January 28, 2000 at 1:30 p.m.–5:00 p.m.

ADDRESSES: San Francisco City Hall—The Chambers (Room 250), 1 Dr. Carlton B. Goodlett Place, San Francisco, CA 94102.

FOR FURTHER INFORMATION CONTACT: Designated Federal Officer, Michael J. Wilhelm, (202) 418–0680, e-mail mwilhelm@fcc.gov. Press Contact, Meribeth McCarrick, Wireless Telecommunications Bureau, 202–418–0600, or e-mail mmccarri@fcc.gov.

SUPPLEMENTARY INFORMATION: Following is the complete text of the Public Notice: This Public Notice advises interested persons of the sixth meeting of the Public Safety National Coordination Committee (''NCC''), which will be held in San Francisco, California. The Federal Advisory Committee Act, Public Law 92–463, as amended, requires public notice of all meetings of the NCC.

Date: January 28, 2000.

Meeting Time: General Membership Meeting—1:30 p.m.–5:00 p.m.

Address: San Francisco City Hall—The Chambers (Room 250), 1 Dr. Carlton B. Goodlett Place, San Francisco, CA 94102.

The NCC Subcommittees will meet from 8:00 a.m. to 12:00 noon, continuing their meetings from the previous day. The NCC General Membership Meeting will commence at 1:30 p.m. and continue until 5:00 p.m. The agenda for the NCC membership meeting is as follows:

1. Introduction and Welcoming Remarks
2. Administrative Matters
3. Remarks of Invited Speaker (TBA)
4. Report from the Interoperability Subcommittee
5. Report from the Technology Subcommittee
6. Report from the Implementation Subcommittee
7. Public Discussion
8. Other Business
9. Upcoming Meeting Dates and Locations
10. Closing Remarks

The FCC has established the Public Safety National Coordination Committee, pursuant to the provisions of the Federal Advisory Committee Act, to advise the Commission on a variety of issues relating to the use of the 24 MHz of spectrum in the 764–776/794–806 MHz frequency bands (collectively, the 700 MHz band) that has been allocated to public safety services. See The Development of Operational, Technical and Spectrum Requirements For Meeting Federal, State and Local Public Safety Agency Communications Requirements Through the Year 2010 and Establishment of Rules and Requirements For Priority Access Service, WT Docket No. 96–86, First Report and Order and Third Notice of Proposed Rulemaking, FCC 98–191, 14 FCC Rcd 152 (1998), 63 FR 58645 (11–2–98).

The NCC has an open membership. Previous expressions of interest in membership have been received in response to several Public Notices inviting interested persons to become members and to participate in the NCC's processes. All persons who have previously identified themselves or have been designated as a representative of an organization are deemed members and are invited to attend. All other interested parties are hereby invited to attend and to participate in the NCC processes and its meetings and to become members of the Committee. This policy will ensure balanced participation. Members of the general public may attend the meeting. To attend the sixth meeting of the Public Safety National Coordination Committee, please RSVP to Joy Alford or Bert Weintraub of the Policy and Rules Branch of the Public Safety and Private Wireless Division, Wireless Telecommunications Bureau of the FCC by calling (202) 418–0680, by faxing (202) 418–2643, or by E-mailing at jalford@fcc.gov or bweintra@fcc.gov. Please provide your name, the organization you represent, your phone number, fax number and e-mail address. This RSVP is for the purpose of determining the number of people who will attend this sixth meeting. The FCC will attempt to accommodate as many people as possible. However, admittance will be limited to the seating available. Persons requesting accommodations for hearing disabilities should contact Joy Alford immediately at (202) 418–7233 (TTY). Persons requesting accommodations for other physical disabilities should contact Joy Alford immediately at (202) 418–0694 or via e-mail at jalford@fcc.gov. The public may submit written comments to the NCC's Designated Federal Officer before the meeting.

Additional information about the NCC and NCC-related matters can be found on the NCC website located at: http://www.fcc.gov/wtb/publicsafety/ncc.html.

Federal Communications Commission.

Jeanne Kowalski,

Deputy Chief, Public Safety and Private Wireless Division, Wireless Telecommunications Bureau.

[FR Doc. 00–801 Filed 1–12–00; 8:45 am]

BILLING CODE 6712–01–P

FEDERAL ELECTION COMMISSION

Sunshine Act Meeting

PREVIOUSLY ANNOUNCED DATE AND TIME: Wednesday, January 12, 2000, 10 a.m. Oral Hearing: Buchanan for President Committee, Inc.

The Hearing has been postponed at the request of the Buchanan Committee and it will be rescheduled for a later date.

* * * * *

PERSON TO CONTACT FOR INFORMATION: Ron Harris, Press Officer, Telephone (202) 694–1220.

Mary W. Dove,

Acting Secretary of the Commission.

[FR Doc. 00–919 Filed 1–11–00; 11:05 am]

BILLING CODE 6715–01–M

FEDERAL MARITIME COMMISSION

Notice of Agreement(s) Filed

The Commission hereby gives notice of the filing of the following agreement(s) under the Shipping Act of 1984. Interested parties can review or obtain copies of agreements at the Washington, DC offices of the Commission, 800 North Capitol Street, NW Room 962. Interested parties may submit comments on an agreement to the Secretary, Federal Maritime Commission, Washington, DC 20573, within 10 days of the date this notice appears in the **Federal Register**.

Agreement No.: 232–011642–002.

Title: East Coast United States/East Coast South America Vessel Sharing Agreement.

Parties: A.P. Moller-Maersk Sealand, P&O Nedlloyd, Ltd., P&O Nedlloyd, B.V., Compania Sud Americana de Vapores, S.A., Euroatlantic Container Line S.A., Braztrans Transportes Maritimos Limitada, Alianca Transportes Maritimos, S.A., Columbus Line.

Synopsis: The proposed modification restates the agreement and clarifies it with respect to vessel strings, the allocation of space, and the subchartering of vessel space to non-parties. The modification also clarifies the agreement with respect to limiting liability, independent marketing, voting, confidentiality, agency, force majeure, applicable law, and arbitration.

Agreement No.: 203–011684.

Title: CCNI/Harrison Line Space Charter Agreement.

Parties: Compania Chilena de Navegacion Interoceanica S.A. (''CCNI'') Harrison Line.

Synopsis: The proposed Agreement authorizes CCNI to charter space to Harrison Line in the trade between ports in Hamburg, Rotterdam, Felixstowe, and Bilboa, and inland points via those ports, and ports and points in Puerto Rico.

Agreement No.: 203–011685.

Title: SCI/Contship Space Charter and Sailing Agreement.

Parties: The Shipping Corporation of India Contship Containerlines Limited.

Synopsis: The proposed Agreement would permit the parties to charter space to one another and to agree upon the number of sailings, schedules, ports called and frequency of port calls in the trade between United States East Coast ports and ports in India and Sri Lanka, ports in the Bangladesh/Philippines Range (Southeast Asia), ports bordering the Mediterranean Sea and in Portugal, and ports on the Red Sea and in the United Arab Emirates. They may also agree, with voluntary adherence, upon rates, charge, and terms and conditions of service applicable to the carriage of cargo as well as voluntary guidelines applicable to service contracts.

Dated: January 7, 2000.

By Order of the Federal Maritime Commission.

Bryant L. VanBrakle,

Secretary.

[FR Doc. 00–776 Filed 1–12–00; 8:45 am]

BILLING CODE 6730–01–P

FEDERAL MARITIME COMMISSION

Ocean Transportation Intermediary License; Applicants

Notice is hereby given that the following applicants have filed with the Federal Maritime Commission applications for licenses as Non-Vessel Operating Common Carrier and Ocean Freight Forwarder—Ocean Transportation Intermediaries pursuant to section 19 of the Shipping Act of 1984 as amended (46 U.S.C. app. 1718 and 46 CFR 515).

Persons knowing of any reason why any of the following applicants should not receive a license are requested to contact the Office of Freight Forwarders, Federal Maritime Commission, Washington, DC 20573.

Non-Vessel-Operating Common Carrier Ocean Transportation Intermediary Applicants

ENC New York, Inc., 150–15 183rd Street, Jamaica, NY 11413, Officer: Kwang Yul Chol, President (Qualifying Individual)

Wellton Express Inc., 179–14 149th Road, Suite 201, Jamaica, NY 11434, Officer: Kenneth Tse, President (Qualifying Individual)

Metro Freight Int'l. Inc., 161–15 Rockaway Blvd., Suite 301, Jamaica, NY 11434, Officers: Sheree C. Chen, Vice President (Qualifying Individual), Janson Lee, President

Yourway Inc., 1570 West Blancke Street, Linden, NJ 07036, Officers: David Slater, President, (Qualifying Individual), John Carey, Vice President, (Qualifying Individual)

Tap-Tap Shipping, 172 Fifth Avenue, Suite 6C, New York, NY 10010, Antoine Schiller Pierre-Pierre, Sole Proprietor

Shine Express Inc., 147–38 182nd Street, Suite 206, Springfield Gardens, NY 11413, Officers: Alessandro Bernardini, CEO (Qualifying Individual), Ram N. Tripathi, President

Non-Vessel-Operating Common Carrier and Ocean Freight Forwarder Transportation Intermediary Applicants

Interstar, Inc., 19506 Hwy. 59 N., Suite 175, Humble, TX 77338, Officer: Gustavo Kolmel, General Manager (Qualifying Individual)

Pacific Shipping Services, Inc., 8345 N.W. 68th Street, Miami, FL 33166, Officers: Mariella I. Garcia, Director (Qualifying Individual), David E. Alva, President

Ocean Freight Forwarders—Ocean Transportation Intermediary Applicants

Air Oceanic Services (NOLA), Inc., 4312 California Avenue, Kenner, LA 70065, Officers: Anna E. Driscoll, Vice President (Qualifying Individual), Guillermo E. Velez, President

Dated: January 7, 2000.

Bryant L. VanBrakle,

Secretary.

[FR Doc. 00–775 Filed 1–12–00; 8:45 am]

BILLING CODE 6730–01–P

FEDERAL MARITIME COMMISSION

[Petition No. P1–00]

Petition of the Port of Houston Authority for the Institution of a Rulemaking Proceeding; Notice of Filing of Petition

Notice is given that a petition for rulemaking has been filed by the Port of

Houston Authority (''Petitioner''). Petitioner requests the Federal Maritime Commission to institute a rulemaking proceeding for the purpose of promulgating a rule addressing the lawfulness of unilateral provisions which provide for the collection of attorney's fees in contracts or tariffs of marine terminal operators under the provisions of the Shipping Act of 1984 as amended. Specifically, Petitioner seeks a rule which confirms that it is not illegal under the Shipping Act for marine terminal operators to contract with their customers, by tariff or otherwise, to permit the collection of attorneys fees and litigation cost in the event the marine terminal operator is required to sue in court to collect fees for services that have been rendered. Petitioner has proposed a provision that it submits should be made the subject of a Commission rulemaking proceeding.

Interested persons are requested to reply to the petition no later than February 7, 2000. Replies shall be directed to the Secretary, Federal Maritime Commission, Washington, DC 20573–0001, shall consist of an original and 15 copies, and shall be served on counsel for petitioner, Amy Loeserman Klein, Esq., 7301 Burdette Court, Bethesda, Maryland 20817. In addition to the official paper filing, a party may also provide the Commission with a copy of its filing by diskette or by e-mail at Secretary@fmc.gov.

Copies of the petition are available for examination at the Office of the Secretary of the Commission, 800 N. Capitol Street, NW, Room 1046, Washington, DC.

Bryant L. VanBrakle,

Secretary.

[FR Doc. 00–777 Filed 1–12–00; 8:45 am]

BILLING CODE 6730–01–M

FEDERAL RESERVE SYSTEM

Change in Bank Control Notices; Acquisitions of Shares of Banks or Bank Holding Companies

The notificants listed below have applied under the Change in Bank Control Act (12 U.S.C. 1817(j)) and § 225.41 of the Board's Regulation Y (12 CFR 225.41) to acquire a bank or bank holding company. The factors that are considered in acting on the notices are set forth in paragraph 7 of the Act (12 U.S.C. 1817(j)(7)).

The notices are available for immediate inspection at the Federal Reserve Bank indicated. The notices also will be available for inspection at the offices of the Board of Governors. Interested persons may express their views in writing to the Reserve Bank indicated for that notice or to the offices of the Board of Governors. Comments must be received not later than January 27, 2000.

A. Federal Reserve Bank of Dallas (W. Arthur Tribble, Vice President) 2200 North Pearl Street, Dallas, Texas 75201–2272:

1. Charles C. Burgess and C. Jane Burgess, Amarillo, Texas; to acquire voting shares of Herring Bancorp, Inc., Vernon, Texas, and thereby indirectly acquire The Herring National Bank, Vernon, Texas.

Board of Governors of the Federal Reserve System, January 7, 2000.

Robert deV. Frierson,

Associate Secretary of the Board.

[FR Doc. 00–769 Filed 1–12–00; 8:45 am]

BILLING CODE 6210–01–P

DEPARTMENT OF HEALTH AND HUMAN SERVICES

Centers for Disease Control and Prevention

[Program Announcement 00023]

Human Immunodeficiency Virus (HIV) Prevention Projects for Community-Based Organizations; Notice of Availability of Funds for Fiscal Year 2000

A. Purpose

The Centers for Disease Control and Prevention (CDC) announces the availability of fiscal year (FY) 2000 funds to support community-based organizations (CBOs) to develop, implement, and evaluate state-of-the-art, model community-based HIV prevention programs for populations at risk for HIV infection, especially racial/ethnic minority populations at risk. This program addresses the ''DRAFT Healthy People 2010'' priority areas of Educational and Community-Based Programs, HIV Infection, and Sexually Transmitted Diseases (STDs).

The goals of this program are to:

1. Reduce the disproportionate impact of the HIV epidemic on racial/ethnic minority populations and other at-risk populations.

2. Improve and expand community-based HIV prevention services by supporting community-based HIV prevention programs that address priorities described in applicable State and local comprehensive HIV prevention plans (that is, the plans developed by the official HIV prevention community planning groups for the jurisdiction in which the CBO is located) or that adequately justify addressing other priorities.

3. Enhance CBOs' incorporation of scientific theory and data, and validated program experience into the design, implementation, and evaluation of HIV prevention services.

4. Support collaboration and coordination of HIV prevention efforts among CBOs, community planning groups, other local organizations, local and State health departments, and managed care organizations serving populations at risk for HIV infection.

B. Eligible Applicants

Eligible applicants are CBOs that meet the following criteria (also see Proof of Eligibility, section E.8.d):

1. CBOs may apply as either (1) Minority CBOs intending to serve predominantly racial/ethnic minority populations at high risk for HIV infection, or (2) other CBOs serving high-risk populations without regard to their racial/ethnic identity. A CBO may submit an application in only one of these categories.

2. The applicant organization must meet the following criteria:

a. Have current, valid tax-exempt status under Section 501(c)(3), as evidenced by an Internal Revenue Service (IRS) determination letter.

b. Must be located in the community and have an established record of at least two years of service to the proposed target population.

3. To apply as a minority CBO, the applicant organization must also meet the following criteria:

a. Have more than 50 percent of positions on the executive board or governing body filled by persons of the racial/ethnic minority group(s) to be served.

b. Have more than 50 percent of key management, supervisory, and administrative positions (e.g., executive director, program director, fiscal director) and more than 50 percent of key service provision positions (*e.g.,* outreach worker, prevention case manager, counselor, group facilitator) filled by persons of the racial/ethnic population(s) to be served.

4. In either category, a CBO may apply as a lead organization within a coalition (For this announcement, the term coalition means a group of organizations in which each member organization is responsible for specific, defined, integral activities within the proposed program, and all member organizations share responsibility for the overall planning, implementation, and evaluation of the program.); that is, a collaborative contractual partnership. The lead organization must meet the

criteria specified above (in #2 and #3). A CBO may submit only one application under this announcement; that is, it may apply as an individual organization or as part of a coalition, but not both.

5. CBOs currently funded under CDC Program Announcements 99091, 99092, and 99096 are eligible to apply if they meet the criteria specified above. However, the total combined award under any combination of these announcements will not exceed $350,000. Funds awarded to currently-funded CBOs must be used to develop and implement new activities or to enhance or expand existing activities and not to supplant funds from other sources.

6. Governmental or municipal agencies, their affiliate organizations or agencies (e.g., health departments, school boards, public hospitals), and private or public universities and colleges are not eligible for funding as a lead organization under this announcement. However, applicants are encouraged to include private or public universities and colleges as collaborators or subcontractors when appropriate.

7. Local affiliates, chapters, or programs of national and regional organizations are eligible to apply. The local affiliate, chapter, or program applying must meet criteria one through six, above.

Note: Public Law 104–65 states that an organization described in section 501(c)(4) of the Internal Revenue Code of 1986 that engages in lobbying activities is not eligible to receive Federal funds constituting an award, grant, cooperative agreement, contract, loan or any other form.

C. Availability of Funds

Approximately $17,120,000 is expected to be available in FY 2000 to fund approximately 76 awards. It is expected that awards will begin on or about June 1, 2000, and will be made for a 12-month budget period within a project period of up to 4 years. The maximum award under this announcement will be $225,000. Applications requesting more than $225,000, including indirect costs, will not be considered and will be returned as ineligible.

Approximately $11,470,400 will be awarded to minority CBOs that provide prevention services for racial/ethnic minority populations at high risk for HIV infection. Approximately $5,649,600 will be awarded to other CBOs that provide prevention services to populations at risk for HIV infection, without regard to the populations' racial/ethnic identity. Funding estimates may change.

Continuation awards within an approved project period will be made on the basis of availability of funds and the applicant's satisfactory progress toward achieving stated objectives. Satisfactory progress toward achieving objectives will be determined by progress reports submitted by the recipient and site visits conducted by CDC representatives. Proof of continued eligibility is required with noncompeting continuation applications.

1. Use of Funds

a. Funds provided under this announcement must support activities directly related to primary HIV prevention (that is, preventing the acquisition or transmission of HIV). However, intervention activities that involve preventing other STDs or substance abuse as a means of reducing or eliminating the risk of HIV transmission may also be supported.

b. No funds will be provided for direct patient medical care (including substance abuse treatment, medical treatment, or medications) or research.

c. These federal funds may not supplant or duplicate existing funding.

d. Applicants may contract with other organizations under these cooperative agreements; however, applicants must perform a substantial portion of the activities for which funds are requested, including program management and operations and delivery of prevention services.

e. Applications requesting funds to support only administrative and managerial functions will not be accepted.

f. Before using funds awarded through this cooperative agreement to develop HIV prevention materials, recipients must check with the CDC National Prevention Information Network (NPIN) to determine if suitable materials are already available. NPIN maintains a collection of HIV, STD and TB resources for use by organizations and the public.

Successful applicants may be contacted by NPIN to obtain information on their program resources for use in referrals and resource directories. Also, grantees should send three copies of all educational materials and resources developed under this grant for inclusion in NPIN's databases.

NPIN also makes available information and technical assistance services for use in program planning and evaluation. For further information on NPIN services and resources, contact NPIN at 1–800–458–5231 (TTY users: 1–800–243–7012). NPIN's web site is www.cdcnpin.org; the fax number is 1–888–282–7681.

2. Funding Preferences

In making awards, preference for funding will be given to:

a. Ensuring a balance of funded CBOs in terms of targeted racial/ethnic minority groups. The number of funded CBOs serving each racial/ethnic minority group may be adjusted based on the rate of HIV/AIDS in that group.

b. Ensuring a balance of funded CBOs in terms of targeted risk behaviors. The number of funded CBOs that target a specific risk behavior (for example, IV drug use) may be adjusted based on the rate of HIV/AIDS associated with that behavior.

c. Ensuring a geographic balance of funded CBOs. Consideration will be given to both high and lower prevalence areas. The number of funded CBOs may be adjusted based on the rate of HIV/AIDS in the jurisdiction.

D. Program Requirements

Each applicant must conduct one or more of the following priority HIV prevention interventions. However, because of the resources, expertise, and organizational capacities needed for success, applicants should carefully consider the feasibility of undertaking more than one of the priority interventions listed.

1. Client-centered HIV counseling, testing, and referral services
2. Individual level interventions
3. Group level interventions (*e.g.*, small group interventions)
4. Community level interventions
5. Street and community outreach (may include Health Education/Risk Reduction activities and face-to-face distribution of condoms, bleach, etc.)

A brief description of these priority interventions is provided in Attachment 1. Also, please reference the materials included in the tool kit for additional information about these interventions. The tool kit will be sent with the application packet.

Although activities may overlap from one type of intervention to another (*e.g.*, individual or group level interventions may be a part of a community-level intervention), each applicant must indicate which one of the interventions is the primary focus.

Applicants should develop program activities that are consistent with applicable State and local comprehensive HIV prevention plans or adequately justify addressing other priorities.

In conducting activities to achieve the purpose of this program, the recipient will be responsible for the activities under number 1. (Required Recipient Activities) and CDC will be responsible

for activities under number 2. (CDC Activities) below.

1. Required Recipient Activities

a. Program Activities

(1) Involve the target population in planning, implementing, and evaluating activities and services throughout the project period. This may be accomplished in collaboration with existing HIV/AIDS prevention activities or groups, such as the community planning group in the applicant's jurisdiction.

(2) Conduct at least one of the following interventions:

(a) Provide HIV counseling, testing, and referral services for persons at high risk for HIV infection. For example: Improve access to or provide alternative testing sites (*e.g.*, sites that are staffed by trained individuals such as IDUs in treatment) that will be more accessible to target populations than currently available sites

1. Provide access to rapid-results testing technologies

2. Improve utilization of post-test counseling, referrals, and follow-up

(b) Conduct health education and risk-reduction interventions (HE/RR) for persons at high risk of becoming infected or transmitting HIV to others. These may include individual, group, or community-level interventions. For example:

1. Reduce unsafe sex and drug practices among individuals newly released from correctional facilities and among injection and other drug users who are in the judicial system.

2. Reduce behaviors that put young people at risk for HIV infection, focusing on youth who are not being served by existing HIV prevention programs and who are at risk for HIV infection.

(c) Conduct outreach activities in order to improve access to the target population and provide face-to-face interactions in which education and educational and other materials (for example, condoms, bleach, sexual responsibility kits) may be shared with high risk individuals in appropriate venues.

(3) For all interventions:

(a) Use social and behavioral science theory and validated programmatic experience to design and implement state-of-the-art, model HIV prevention programs and use epidemiologic, behavioral, and social science data and community experience to structure and guide intervention and service delivery.

(b) Assist HIV-positive persons in gaining access to appropriate primary HIV prevention, such as health education and risk-reduction services, HIV treatment and other early medical care; substance abuse prevention services; STD screening and treatment; reproductive and perinatal health services; partner counseling and referral services; psychosocial support and mental health services; TB prevention and treatment; and other supportive services. High-risk clients who test negative should be referred to appropriate health education and risk-reduction services and other appropriate prevention and treatment services. These activities may involve attempts to locate a medical home for uninsured clients.

(c) Incorporate cultural competency, sensitivity to issues of sexual and gender identity, and linguistic and developmental appropriateness into all program activities and prevention messages.

(d) Ensure adequate protection of client confidentiality.

b. Collaboration and Coordination

(1) Establish ongoing collaborations (For this announcement, the term collaborate means exchanging information, developing and altering activities, sharing resources, and enhancing the capacity of another organization for mutual benefit to achieve a common purpose.) with health departments, community planning groups, academic and research institutions, health care providers, and other local resources in designing, implementing, and evaluating interventions. (See Attachment 2 in the application package for a list of organizations with which collaboration may be appropriate.)

(2) In order to strengthen the breadth and comprehensiveness of local HIV/AIDS prevention services and eliminate duplication of efforts, coordinate (For this announcement, the term coordinate means exchanging information and altering activities for mutual benefit.) activities with health departments, such as sharing progress reports with state and local health departments; community planning groups; and other national, regional, and local organizations and agencies involved in HIV prevention activities, especially those serving the target population. (See Attachment 2 in the application package for a list of organizations with which collaboration may be appropriate.)

(3) Participate in the HIV prevention community planning process. Participation may include involvement in workshops; attending meetings; if nominated and selected, serving as a member of the group; reviewing and commenting on plans; and becoming familiar with and utilizing information from the community planning process, such as the epidemiologic profile, needs assessment data, and intervention strategies. Grantees should also present an overview of their project activities to the community planning group in their jurisdiction.

c. Program Monitoring and Evaluation

(1) Use approximately three to five percent of the funds awarded under this announcement for program evaluation and outcome monitoring of intervention activities.

(2) During the first year of funding, CDC will collaborate with CBOs to develop standardized evaluation formats and activities for grantees.

(3) Conduct periodic client satisfaction assessments via quantitative (*e.g.,* periodic surveys) and qualitative methods (*e.g.,* focus groups).

d. Quality Assurance

(1) Identify the training needs of your staff and develop and implement a plan to address these needs.

(2) Work with CDC and CDC-funded capacity-building assistance programs to identify and address the capacity building needs of your program.

(3) Explore and utilize local resources for organizational and program development, such as the health department, other CBOs, community development agencies, local colleges and universities, locally-based foundations, and the local business or industrial community.

e. Communication and Information Dissemination

(1) Market your prevention program and services to the target population and local community.

(2) Compile lessons learned from the project. Facilitate the dissemination of lessons learned and successful prevention interventions and program models to other organizations and CDC through peer-to-peer interactions, meetings, workshops, conferences, use of the Internet, communications with project officers, and other capacity-building and technology transfer mechanisms.

(3) Ensure Internet and e-mail communication for your organization during the first year of funding.

f. Resource Development

Develop and implement a plan for obtaining additional resources from non-CDC sources to supplement the program conducted through this cooperative agreement and to enhance the likelihood of its continuation after the end of the project period. Note that

local organizations and agencies, such as community development agencies, colleges, and universities are often repositories of information about funding and other types of organizational assistance.

g. Other Activities

Adhere to CDC policies for securing approval for CDC sponsorship of conferences.

2. CDC Activities

a. Coordinate a national capacity-building and technology transfer network that will be available to directly assist CBOs in organizational and programmatic development.

b. Provide consultation and technical assistance in administrative activities (for example, fiscal management and reporting) and programmatic areas (for example, planning, implementing, and evaluating prevention activities). CDC may provide consultation and technical assistance both directly and indirectly through prevention partners such as health departments, national and regional minority organizations (NRMOs), contractors, and other national and local organizations.

c. Provide up-to-date scientific information on risk factors for HIV infection, prevention measures, and program strategies for prevention of HIV infection.

d. Assist in the design and implementation of program evaluation activities, including formats for reporting and program assessment and improvement.

e. Assist recipients in collaborating with State and local health departments, community planning groups, and other federally-supported HIV/AIDS prevention funding recipients. CDC activities will focus on monitoring the collaboration among the health department, community planning group, and CBOs and work from all sides to promote collaboration.

f. Facilitate the transfer of successful prevention interventions, program models, and lessons learned by convening meetings of grantees, workshops, conferences, newsletters, use of the Internet, and communications between project officers and grantees.

g. Facilitate the exchange of program information and technical assistance among community organizations, health departments, and national and regional organizations.

h. Monitor the recipient's performance of program and fiscal activities, protection of client confidentiality, and compliance with other requirements.

i. Conduct an overall evaluation of this cooperative agreement program.

E. Application Content

Use the information in the Program Requirements, Application Content, and Evaluation Criteria sections of this announcement to develop your application.

Applications that do not follow the instructions and format below will be returned without being reviewed:

1. The narrative should be no more than 35 pages, which includes items 10 F–M. The narrative excludes the proof of eligibility section, items A–E, budget, and attachments. Applications exceeding 35 pages will not be reviewed.

2. Number each page sequentially, in the application and the appendices, and provide a complete Table of Contents to the application and its attachments.

3. Begin each separate section of the application on a new page.

4. The original and each copy of the application set must be submitted unstapled and unbound.

5. All material must be typewritten; single spaced, with a font of 10 pitch or 12 point, on 8½″ by 11″ paper, with at least 1″ margins, headings, and footers; and printed on one side only.

6. Note that information which should be part of the basic plan (for example, activity timetables, staff responsibilities in program activities, or evaluation plans) will not be accepted if placed in the attachments rather than in the application.

7. In developing the application, you must use the following format and instructions. Your application will be evaluated according to the quality of the responses to the following questions, so it is important to follow the format provided below in writing out your program proposal.

8. Label each section below using the letter (and number) indicated for each question. A section includes a letter with all of its following numbers, as in section d, Proof of Eligibility, numbers 1–9.

9. If a question is not applicable, use the designation N/A by that letter and number.

10. Make certain that your application addresses all required activities (See Required Recipient Activities section).

a. Application Category

Indicate whether your organization is applying as a minority or other CBO.

b. Target Population

What population, as defined by locality, lifestyle, risk behaviors, social or economic circumstances, patterned social interaction, collective identity, or other identification, will be the focus of the proposed project (for example, female sex workers in Harlem; African American men who have sex with men; Hispanic men and women who use crack cocaine and engage in unprotected sex; youth ages 12–18 in the community who sell sex for shelter, food, and/or drugs)?

c. Program Goals

What are the broad HIV prevention goals that your proposed intervention(s) aims to achieve by the end of the 4-year project period? These goals should address risk behaviors that your program will influence; for example, reduce the rate of unprotected sex by female sex workers in Harlem.

d. Proof of Eligibility

Applicants must answer the following questions and provide any documents requested. Failure to provide the required documentation will result in disqualification.

Please place the requested attachments at the end of this section, not in the Attachments at the end of your application.

(1) Does your organization have currently valid Internal Revenue Service (IRS) 501(c)(3) tax-exempt status?

Note: Attach to the end of this section a copy of the IRS determination letter of your organization's 501(c)(3) tax-exempt status.

(2) Does your organization have a documented 2-year record of providing service to the target population (as described in 8.b, Target Population, above)?

Note: Attach to the end of this section a list of all types of services your organization has provided to the proposed target population and when provision of each type of service was begun (*e.g.*, HIV prevention case management, July 1996).

(3) If applying as a minority CBO, does your organization have an executive board or governing body with more than 50 percent of its members belonging to the racial/ethnic minority population(s) to be served?

Note: Attach to the end of this section a list of the members of your board or governing body, along with their positions on the board, their areas of expertise, their race/ethnicity, and their sex.

(4) If an organization applies as a minority CBO, but does not submit proof, their application will be considered as ineligible. They will not be considered in the other category. If applying as a minority CBO, are more than 50 percent of key management, supervisory, and administrative positions (*e.g.*, executive director,

program director, fiscal director) and more than 50 percent of key service provision positions (*e.g.*, outreach worker, prevention case manager, counselor, group facilitator) filled by persons belonging to the racial/ethnic population(s) to be served?

Note: Attach to the end of this section a list of all existing personnel in key positions in your organization, along with their position in the organization, their areas of expertise, their roles in the proposed project, their race/ethnicity, and their sex. Also attach a similar list of proposed personnel.

(5) Is your organization applying as a single CBO or as a lead organization in a coalition (*i.e.*, a collaborative contractual partnership)?

(6) Is your organization applying as part of a coalition with another organization as the lead under this announcement?

(7) Is your organization currently funded under CDC Program Announcement 99091, 99092, or 99096? If so, what is the amount of your award under each?

(8) Is your organization a governmental or municipal agency, its affiliate organization or agency (*e.g.*, health department, school board, public hospital), or a private or public university or college?

(9) Is your organization included in the category described in section 501(c)(4) of the Internal Revenue Code of 1986 that engages in lobbying activities?

e. Abstract

(Should not exceed one pages) (Not scored)

Please provide a brief summary of your proposed program activities, including:

(1) A description of the target population on which the proposed project will focus and a justification (using HIV/AIDS or other STD epidemiologic, risk behavior, needs assessment, or other local indicator data) for having selected this group as the target population.

(2) A description of the goals and anticipated outcomes of the proposed intervention activity in terms of the risk behaviors targeted in this application.

(3) A description of the proposed intervention(s) and services to be provided and an estimated time frame.

(4) A description of your organization's staff responsibilities in the proposed project and of the roles of collaborators and volunteers on the project.

(5) How you will develop collaborations with local and State health departments, community planning groups, and other organizations, including other CBOs, in the development of your project.

f. Justification of Need

(Should not exceed five pages)(100 points; Scoring criteria: Effective use of epidemiologic, behavioral, socioeconomic, and other data to define the community, its risk for HIV, and its need for your proposed HIV/AIDS prevention intervention)

(1) How and to what extent has the proposed target population been affected by the HIV/AIDS epidemic (*e.g.*, HIV incidence or prevalence, AIDS incidence or prevalence, AIDS mortality, socioeconomic effects)?

(2) What behavioral and other characteristics of the target population contribute to the risk of HIV transmission or present barriers to HIV prevention (for example, unsafe sexual behaviors as indicated by rates of STDs, teen pregnancy, or behavioral risk assessments; substance use rates; environmental, social, cultural, or linguistic characteristics)?

(3) Why does the target population need the proposed HIV prevention activities, and how were these needs identified (for example, community needs assessments, resource inventories, the community comprehensive HIV prevention plan)?

Note: Include a description of existing HIV prevention and risk-reduction efforts provided by other organizations to address the needs of the target population and an analysis of the gap between the identified need and the resources currently available to address the need.

(4) If the comprehensive HIV prevention plan does not prioritize the target population or intervention(s) that you have proposed, how do you justify departing from the plan?

Note: For example, your organization may target a population in which, although the current AIDS prevalence is low, there is wide-spread, high level of behavior associated with risk for HIV transmission. Your intervention, therefore, would provide prevention activities in order to prevent the development of higher rates of HIV/AIDS in this population.

(5) What are the barriers within your community or the target population that may reduce the effectiveness of your proposed interventions, and how will you overcome these barriers?

g. Program Activities

(Should not exceed 12 pages)

(400 points; Scoring criteria: likelihood of achieving project goals; soundness of proposed activities; basis in science, or validated program experience; feasibility; innovativeness; specificity, feasibility, time phasing, and measurability of stated objectives)

(1) Including persons from the target population in program planning:

(a) How will you involve the target population in planning, implementing, and evaluating your project's interventions and services during the project period?

Note: If you believe that your existing board structure or staff composition accomplishes this intent, please describe and explain in detail.

(b) In conducting activities to involve the target population, what are your process objectives for the first year of operation?

Note: Objectives should be specific, realistic, time-phased, and measurable. Process objectives should focus on the projected amount, frequency, and duration, within a specific time frame, of the activities and the number and characteristics of the target population to be served or the participants.

(2) Intervention activities:

Please describe each proposed intervention separately and provide the following information for each intervention. Applicants should not apply for more interventions than they can conduct effectively.

(a) What intervention or service will be provided (for example, Conduct individual level counseling)?

(b) What program goal does the intervention address (for example, Reduce the rate of unprotected sex by female sex workers in Harlem).

(c) What are the outcome objectives for the first year of the proposed intervention activities (for example, Increase condom use among program participants by 60 percent)?

Note: Objectives should be specific, realistic, time-phased, and measurable. Outcome objectives should focus on the specific behaviors that your intervention activities are designed to influence.

(d) What are your process objectives related to the intervention or service during your first year of operation (for example, Conduct individual level counseling with 100 clients within the first three months)?

(e) What are the specific activities to be conducted or services to be provided to accomplish the process objectives indicated above, and where and when will these activities or services take place (for example, Deploy outreach workers to the corner of K and North Streets on Thursday through Saturday nights from 8:00 p.m. to 2:00 a.m.)?

(f) How will you recruit or access clients for this intervention or service?

(g) What is the theoretical basis (in social or behavioral science or validated

program experience) that supports the potential effectiveness of this proposed intervention or service in addressing the project's goals and objectives, and how has this been incorporated into the intervention or service design?

Note: Applicant may refer to appropriate social and behavioral science theory and data, or to validated, effective HIV/AIDS intervention programs, in support of applicant's HIV prevention work within the target population.

(h) How will you use epidemiologic and social and behavioral science data and other information to structure and guide your proposed intervention or service?

Note: For example, social science data may indicate that sex workers are more effectively reached by other current or former sex workers; therefore, the program staff may recruit and train sex workers to assist in outreach activities.

(i) How will you assist HIV-positive persons and high-risk HIV-negative persons to access appropriate treatment and other needed services, as described in Required Recipient Activities?

(j) How will you ensure that this intervention or service will be culturally competent, sensitive to issues of sexual and gender identity, and linguistically and developmentally appropriate?

(k) What methods will you use to ensure that client confidentiality will be protected?

(3) Management and staffing of the program:

(a) How will the proposed project be managed and staffed, and what will be the roles and responsibilities of the applicant's program staff?

(b) What are the skills and experience of the applicant's program staff?

(c) If you are applying as the lead organization in an HIV prevention coalition, describe the role(s) of the other organization(s), the other organizations' staff responsibilities, and the skills and experience of the other organizations' program staff?

(d) What is the potential for volunteer involvement in your program? If volunteers will be involved, describe plans to recruit, train, place, and retain volunteers.

(e) In staffing your proposed project, what are your specific process objectives for the first year of operation?

(4) Time line:

Provide a time line that identifies major implementation steps in your proposed project and assigns approximate dates for inception and completion of each step.

h. Developing Local Collaborations and Coordinated Activities

(Should not exceed two pages)

(125 points; Scoring Criteria: completeness; specificity, feasibility, time phasing, and measurability of stated objectives)

(1) What steps will you take to develop working collaborations with health departments, community planning groups, academic and research institutions, health care providers, and other local resources? (See Attachment 2 in the application package for a list of organizations with which collaboration may be appropriate.)

(2) Which activities in your proposed project will be conducted by collaborating organizations that are not part of the HIV prevention coalition or by subcontractors?

(3) In developing collaborative relationships with other organizations or subcontractors, what are your specific process objectives for your first year of operation?

(4) What steps will you take to coordinate HIV prevention activities among your proposed program and other HIV prevention or service providers?

(5) In developing these relationships, what are your specific process objectives for the first year of your program?

(6) What specific steps will you take to participate in the HIV prevention community planning process?

(7) In participating in the community planning process, what are your specific process objectives for the first year?

i. Program Monitoring and Evaluation, and Quality Assurance

(Should not exceed five pages)

(175 points; Scoring Criteria: completeness; technical soundness; feasibility, specificity, time phasing, and measurability of stated objectives)

(1) Your evaluation plan should include a discussion of specific mechanisms and methods to collect the information below.

(a) Which risk behaviors are being targeted?

(b) What are the outcome objectives of the program with regard to changing risk behavior?

(c) What interventions are being conducted?

(d) With which clients? What populations are being served?

(e) With how many clients?

(f) What progress has been made toward reaching the outcome objectives indicated above?

(g) What staff resources are being utilized to conduct these interventions?

Your plan should also include a discussion of the following:

(1) Staff responsible for collecting the information indicated above;

(2) Timeline for collecting this information;

(3) How these activities will be integrated into the project as a whole;

(4) In implementing this program evaluation plan, state your specific process objectives for the first year of operation.

Please provide a very specific discussion regarding your quality assurance activities which include responses to the questions below:

(1) How will you identify and meet the training needs of your staff (including staff in your organization and in other member organizations in the coalition) with regard to knowledge of HIV and STD risks and effective HIV prevention interventions?

(2) How will you identify and address the capacity-building or technical assistance needs of your organization?

(3) In implementing these quality assurance plans, what are your specific process objectives for the first year of operation?

j. Communication and Information Dissemination

(Should not exceed one page) (50 points; Scoring criteria: completeness; appropriateness; feasibility; specificity, time phasing, and measurability of stated objectives)

(1) How will you market your project in your community?

(2) How will you disseminate information about successful intervention strategies or project activities and lessons learned?

(3) In implementing this communication and information dissemination plan, what are your specific process objectives for the first year of operation?

(4) How will you make Internet and email communication available to your organization and, if part of a coalition, to the other member organizations in the coalition?

k. Resource Development

(Should not exceed one page)

(50 points; Scoring criteria: completeness; appropriateness; feasibility; specificity, time phasing, and measurability of stated objectives)

(1) How will you obtain additional resources from non-CDC sources to supplement the program conducted through this cooperative agreement, expand services provided through the proposed project, and enhance the likelihood of its continuation after the end of the project period?

(2) In implementing this resource development plan, what are your specific process objectives for the first year of operation?

l. Organizational History and Experience

(Should not exceed three pages.)

(100 points; Scoring criteria: extent and relevance of applicant organization's experience)

(1) What types of health-related service to your community or target population have your organization provided (*e.g.,* HIV/AIDS prevention, drug treatment, teen pregnancy counseling) and for how long?

(2) What experience does your organization have in HIV/AIDS, STD, or other prevention interventions (*e.g.,* health education/risk reduction; prevention case management; counseling and testing)?

(3) What other experience does your organization have in providing services to the target population, and for how long?

(4) What experience does your organization have in establishing and participating in coalitions for the delivery of services to the target population?

(5) What experience does your organization have in developing and maintaining long-term relationships with CBOs, health departments, or other organizations that provide health or prevention services?

(6) What experience does your organization have in providing services that respond effectively to the cultural, gender, environmental, social, and linguistic characteristics of the target populations in this proposal?

Note: In answering this question, describe the types of services provided and list any culturally, linguistically, and developmentally appropriate activities and materials that your organization has developed.

(7) What experience does your organization have in documenting and tracking delivery of services or prevention activities?

(8) What experience does your organization have in evaluating its program activities?

(9) What experience does your organization have in marketing its activities or services?

(10) What experience does your organization have in resource development?

m. Budget and Staffing Breakdown and Justification

(Not scored)

(1) Applicants should submit a budget in accordance with Form 424 and also, provide a detailed budget for each proposed intervention (please reference the sample budget format in the tool kit). Justify all operating expenses in relation to the planned activities and stated objectives. CDC may not approve or fund all proposed activities. Be precise about the program purpose of each budget item and itemize calculations wherever appropriate.

(2) For each contract contained within the application budget, describe the type(s) of organizations or parties to be selected and the method of selection; identify the specific contractor(s), if known, or describe the criteria for contractors who might apply for the contract; describe the services to be performed and justify the use of another party to perform these services; provide a breakdown of and justification for the estimated costs of the contracts; specify the period of performance; and describe the methods to be used for monitoring the contract.

(3) Provide a job description for each key position, specifying job title; function, general duties, and activities; salary range or rate of pay; and the level of effort and percentage of time spent on activities that would be funded through this cooperative agreement. If the identity of any key personnel who will fill a position is known, his/her name and resume should be attached. Experience and training related to the proposed project should be noted. If the identity of staff is not known, describe your recruitment plan. If volunteers are involved in the project, provide job descriptions.

Note: If indirect costs are requested, you must provide a copy of your organization's current negotiated Federal indirect cost rate agreement.

F. Required Attachments

1. Affiliates of national organizations must include with the application an original, signed letter from the chief executive officer of the national organization assuring their understanding of the intent of this program announcement and the responsibilities of recipients.

2. Memoranda of understanding or agreement as evidence of established or agreed-upon collaborative relationships. Memoranda of agreement should specifically describe the proposed collaborative activities. Evidence of continuing collaboration must be submitted each year to ensure that the relationships are still in place. Memoranda of agreement from health departments should include a statement that they have reviewed your application for these funds. (Please reference sample Memoranda of agreement in the tool kit)

3. A list of the community resources and health care providers to which referrals and other types of coordinated activities will be made. Provide letters of agreement that arrangements have been made for the coordinated activities indicated in your application.

4. Protocols to guide and document training, activities, services, and referrals (*e.g.,* applicants seeking funds for Street and Community Outreach Interventions must provide a description of the policies and procedures that will be followed to assure the safety of outreach staff).

5. A description of funds received from any source to conduct HIV/AIDS programs and other similar programs targeting the population proposed in the program plan. This summary must include: (1) The name of the sponsoring organization/source of income, amount of funding, a description of how the funds have been used, and the budget period; (2) a summary of the objectives and activities of the funded program(s); and (3) an assurance that the funds being requested will not duplicate or supplant funds received from any other Federal or non-Federal source. CDC-awarded funds can be used to expand or enhance services supported with other Federal or non-Federal funds. In addition, identify proposed personnel devoted to this project who are supported by other funding sources and the activities they are supporting.

6. Independent audit statements from a certified public accountant for the previous 2 years.

7. A copy of your organization's current negotiated Federal indirect cost rate agreement, if applicable.

Note: Materials submitted as attachments should be printed on one side of 8½″ × 11″ paper. Please do not attach bound materials such as booklets or pamphlets. Rather, submit copies of the materials printed on one side of 8½″ × 11″ paper. Bound materials may not be reviewed.

G. Submission and Deadline

Submit the original and two copies of PHS 5161 (OMB Number 0937–0189). Forms are available at the following Internet address: www.cdc.gov/* * * Forms, or in the application kit. On or before March 6, 2000, submit the application to the Grants Management Specialist identified in the Where to Obtain Additional Information section of this announcement.

Applicants should simultaneously submit a copy of the application to their State HIV/AIDS Directors.

Deadline: Applications shall be considered as meeting the deadline if they are either:

1. Received on or before the deadline date; or

2. Sent on or before the deadline date and received in time for submission to the independent review group.

(Applicants must request a legibly dated U.S. Postal Service postmark or obtain a legibly dated receipt from a commercial carrier or U.S. Postal Service. Private metered postmarks shall not be acceptable as proof of timely mailing.)

Late Applications: Applications which do not meet the criteria in (a) or (b) above are considered late applications, will not be considered, and will be returned to the applicant.

H. Evaluation Criteria

Each application will be evaluated individually against the criteria described in the Application Content section by an independent review group appointed by CDC.

Before final award decisions are made, CDC may conduct predecisional site visits and/or business management and fiscal recipient capability assessments with CBOs whose applications are highly ranked. CDC may also review programmatic conditions and technical assistance requirements with the local or State health department and applicant's board of directors.

I. Other Requirements

Technical Reporting Requirements

Provide CDC with the original plus two copies of:

1. progress reports quarterly, no more than 30 days after the end of each 3 month period.
2. financial status report, no more than 90 days after the end of each budget period; and
3. final financial report and performance report, no more than 90 days after the end of the project period.

Send all reports to the Grants Management Specialist identified in the Where to Obtain Additional Information section of this announcement.

The following additional requirements are applicable to this program. For a complete description of each, see Attachment 3 in this announcement.

AR–4: HIV/AIDS Confidentiality Provisions
AR–5: HIV Program Review Panel Requirements
AR–7: Executive Order 12372 Review
AR–8: Public Health System Reporting Requirements
AR–9: Paperwork Reduction Act Requirements
AR–10: Smoke-Free Workplace Requirements
AR–11: ''DRAFT Healthy People 2010''
AR–12: Lobbying Restrictions
AR–14: Accounting System Requirements

J. Authority and Catalog of Federal Domestic Assistance Number

This program is authorized under Sections 301(a) and 317 of the Public Health Service Act, 42 U.S.C. 241(a) and 247b as amended. The Catalog of Federal Domestic Assistance Number is 93.939, HIV Prevention Activities—Non-governmental Organization Based.

K. Where To Obtain Additional Information

To receive additional written information and to request an application and tool kit, call NPIN at 1–800–458–5231 (TTY users: 1–800–243–7012); visit their web site: www.cdcnpin.org/program; send requests by fax to 1–888–282–7681 or send requests by e-mail: application-cbo@cdcnpin.org. This information is also posted on the Division of HIV/AIDS Prevention (DHAP) Web site at http://www.cdc.gov/nchstp/hiv_aids/funding/toolkit/.

CDC maintains a Listserv (HIV–PREV) related to this program announcement. By subscribing to the HIV–PREV Listserv, members can submit questions and will receive information via e-mail with the latest news regarding the program announcement. Frequently asked questions on the Listserv will be posted to the Web site. You can subscribe to the Listserv on-line or via e-mail by sending a message to: listserv@listserv.cdc.gov and writing the following in the body of the message: subscribe hiv-prev first name last name.

If you have questions after reviewing the contents of all the documents, business management technical assistance may be obtained from: Maggie Warren, Grants Management Specialist, Grants Management Branch, Procurement and Grants Office Program Announcement 00023, Centers for Disease Control and Prevention (CDC), Room 3000, 2920 Brandywine Road, Mailstop E–15, Atlanta, GA 30341–4146; Telephone (770) 488–2736. E-mail mcs9@cdc.gov

See also the CDC home page on the Internet: http://www.cdc.gov

For program technical assistance, contact: Tomas Rodriguez, Community Assistance, Planning, and National Partnerships Branch, National Center for HIV, STD, and TB Prevention, Centers for Disease Control and Prevention (CDC), 1600 Clifton Road, M/S E–58, Atlanta, GA 30333; Telephone number (404) 639–5240. E-mail address: trr0@cdc.gov (0 is the number, not the letter o).

John L. Williams,

Director, Procurement and Grants Office.

[FR Doc. 00–794 Filed 1–12–00; 8:45 am]

BILLING CODE 4163–18–P

DEPARTMENT OF HEALTH AND HUMAN SERVICES

Centers for Disease Control and Prevention

Disease, Disability, and Injury Prevention and Control Special Emphasis Panel (SEP): Grants for Education Programs in Occupational Safety and Health, Program Announcement 99041.

In accordance with section 10(a)(2) of the Federal Advisory Committee Act (Pub. L. 92–463), the Centers for Disease Control and Prevention (CDC) announces the following meeting.

Name: Disease, Disability, and Injury Prevention and Control Special Emphasis Panel (SEP): Grants for Education Programs in Occupational Safety and Health, Program Announcement 99041, meeting.

Times and Dates: 3 p.m.–4 p.m., February 13, 2000 (Open). 4 p.m.–10 p.m., February 13, 2000 (Closed). 8 a.m.–6 p.m., February 14, 2000 (Closed). 8 a.m.–5 p.m., February 15, 2000 (Closed).

Place: Commonwealth Hilton, I–75 at Turfway Road, Florence, Kentucky 41042.

Status: Portions of the meeting will be closed to the public in accordance with provisions set forth in section 552b(c)(4) and (6), Title 5 U.S.C., and the Determination of the Associate Director for Management and Operations, CDC, pursuant to Public Law 92–463.

Matters To Be Discussed: The meeting will include the review, discussion, and evaluation of applications received in response to Program Announcement 99041.

Contact Person for More Information: Bernadine Kuchinski, Occupational Health Consultant, National Institute for Occupational Safety and Health, Office of Extramural Programs, CDC, 1600 Clifton Road, N.E., m/s D40 Atlanta, Georgia 30333. Telephone 404/639–3342, e-mail bbk1@cdc.gov.

The Director, Management Analysis and Services Office, has been delegated the authority to sign **Federal Register** notices pertaining to announcements of meetings and other committee management activities, for both the Centers for Disease Control and Prevention and the Agency for Toxic Substances and Disease Registry.

Dated: January 5, 2000.

Carolyn J. Russell,

Director, Management Analysis and Services Office, Centers for Disease Control and Prevention CDC.

[FR Doc. 00–797 Filed 1–12–00; 8:45 am]

BILLING CODE 4163–19–P

DEPARTMENT OF HEALTH AND HUMAN SERVICES

Health Care Financing Administration

[Document Identifier: HCFA–4040]

Agency Information Collection Activities: Submission For OMB Review; Comment Request

In compliance with the requirement of section 3506(c)(2)(A) of the Paperwork Reduction Act of 1995, the Health Care Financing Administration (HCFA), Department of Health and Human Services, has submitted to the Office of Management and Budget (OMB) the following proposal for the collection of information. Interested persons are invited to send comments regarding the burden estimate or any other aspect of this collection of information, including any of the following subjects: (1) the necessity and utility of the proposed information collection for the proper performance of the agency's functions; (2) the accuracy of the estimated burden; (3) ways to enhance the quality, utility, and clarity of the information to be collected; and (4) the use of automated collection techniques or other forms of information technology to minimize the information collection burden.

Type of Information Collection Request: Extension of a currently approved collection;

Title of Information Collection: Request for Enrollment in Supplementary Medical Insurance and Supporting Regulations in 42 CFR 407.10 and 407.11;

Form No.: HCFA–4040 (OMB# 0938–0245);

Use: The HCFA–4040 is used to establish entitlement to Supplementary Medical Insurance by Beneficiaries not eligible under Part A of Title XVIII or Title II of the Social Security Act. The HCFA–4040SP is the Spanish edition of this form.;

Frequency: Other: One Time Only;

Affected Public: Individuals or Households, Federal Government, and State, Local or Tribal Government;

Number of Respondents: 10,000;

Total Annual Responses: 10,000;

Total Annual Hours: 2,500.

To obtain copies of the supporting statement for the proposed paperwork collections referenced above, access HCFA's Web Site Address at http://www.hcfa.gov/regs/prdact95.htm, or E-mail your request, including your address and phone number, to Paperwork@hcfa.gov, or call the Reports Clearance Office on (410) 786–1326. Written comments and recommendations for the proposed information collections must be mailed within 30 days of this notice directly to the OMB Desk Officer designated at the following address: OMB Human Resources and Housing Branch, Attention: Allison Eydt, New Executive Office Building, Room 10235, Washington, D.C. 20503.

Dated: December 22, 1999.

John Parmigiani,

Manager, HCFA, Office of Information Services, Security and Standards Group, Division of HCFA Enterprise Standards.

[FR Doc. 00–841 Filed 1–12–00; 8:45 am]

BILLING CODE 4120–03–P

DEPARTMENT OF HEALTH AND HUMAN SERVICES

Health Care Financing Administration

[Document Identifier: HCFA–R–5]

Agency Information Collection Activities: Submission for OMB Review; Comment Request

In compliance with the requirement of section 3506(c)(2)(A) of the Paperwork Reduction Act of 1995, the Health Care Financing Administration (HCFA), Department of Health and Human Services, has submitted to the Office of Management and Budget (OMB) the following proposal for the collection of information. Interested persons are invited to send comments regarding the burden estimate or any other aspect of this collection of information, including any of the following subjects: (1) The necessity and utility of the proposed information collection for the proper performance of the agency's functions; (2) the accuracy of the estimated burden; (3) ways to enhance the quality, utility, and clarity of the information to be collected; and (4) the use of automated collection techniques or other forms of information technology to minimize the information collection burden.

Type of Information Collection Request: Extension of a currently approved collection;

Title of Information Collection: Physician Certifications/Recertifications in Skilled Nursing Facilities (SNFs) Manual Instructions and Supporting Regulations in 42 CFR 424.20;

Form No.: HCFA–R–5 (OMB# 0938–0454);

Use: The Medicare program requires as a condition for Medicare Part A payment for post-hospital skilled nursing facility (SNF) services, that a physician must certify and periodically recertify that a beneficiary requires an SNF level of care. The physician certification and recertification is intended to ensure that the beneficiary's need for services has been established and then reviewed and updated at appropriate intervals. The documentation is a condition for Medicare Part A payment for post-hospital SNF care.

Frequency: On occasion;

Affected Public: State, Local or Tribal Government, Individuals or Households, Business or other for-profit, and Not-for-profit institutions;

Number of Respondents: 2,038,248;

Total Annual Responses: 947,816;

Total Annual Hours: 417,239.

To obtain copies of the supporting statement for the proposed paperwork collections referenced above, access HCFA's Web Site Address at http://www.hcfa.gov/regs/prdact95.htm, or E-mail your request, including your address and phone number, to Paperwork@hcfa.gov, or call the Reports Clearance Office on (410) 786–1326. Written comments and recommendations for the proposed information collections must be mailed within 30 days of this notice directly to the OMB Desk Officer designated at the following address: OMB Human Resources and Housing Branch, Attention: Allison Eydt, New Executive Office Building, Room 10235, Washington, D.C. 20503.

Dated: December 22, 1999.

John Parmigiani,

Manager, HCFA, Office of Information Services, Security and Standards Group, Division of HCFA Enterprise Standards.

[FR Doc. 00–842 Filed 1–12–00; 8:45 am]

BILLING CODE 4120–03–P

DEPARTMENT OF HEALTH AND HUMAN SERVICES

Health Care Financing Administration

[Document Identifier: HCFA–R–297]

Agency Information Collection Activities: Submission For OMB Review; Comment Request

In compliance with the requirement of section 3506(c)(2)(A) of the Paperwork Reduction Act of 1995, the Health Care Financing Administration (HCFA), Department of Health and Human Services, has submitted to the Office of Management and Budget (OMB) the following proposal for the collection of information. Interested persons are invited to send comments regarding the burden estimate or any other aspect of this collection of information, including any of the following subjects: (1) The necessity and utility of the proposed information collection for the proper performance of

the agency's functions; (2) the accuracy of the estimated burden; (3) ways to enhance the quality, utility, and clarity of the information to be collected; and (4) the use of automated collection techniques or other forms of information technology to minimize the information collection burden.

Type of Information Collection Request: Existing collection in use without an OMB control number;

Title of Information Collection: Request for Employment Information;

Form No.: HCFA–R–297 (OMB #0938–NEW);

Use: This form is needed to determine whether a beneficiary can enroll in Part B Medicare and/or qualify for premium reduction. This form is used by the Social Security Administration to obtain information from employers regarding whether a Medicare beneficiary's coverage under a group health plan is based on current employment.

Frequency: On occasion;

Affected Public: Business or other for-profit;

Number of Respondents: 5,000;

Total Annual Responses: 5,000;

Total Annual Hours: 750.

To obtain copies of the supporting statement for the proposed paperwork collections referenced above, access HCFA's Web Site Address at http://www.hcfa.gov/regs/prdact95.htm, or E-mail your request, including your address and phone number, to Paperwork@hcfa.gov, or call the Reports Clearance Office on (410) 786–1326. Written comments and recommendations for the proposed information collections must be mailed within 30 days of this notice directly to the OMB Desk Officer designated at the following address: OMB Human Resources and Housing Branch, Attention: Allison Eydt, New Executive Office Building, Room 10235, Washington, DC 20503.

Dated: December 22, 1999.

John Parmigiani,

Manager, HCFA, Office of Information Services, Security and Standards Group, Division of HCFA Enterprise Standards.

[FR Doc. 00–845 Filed 1–12–00; 8:45 am]

BILLING CODE 4120–03–P

DEPARTMENT OF HEALTH AND HUMAN SERVICES

Substance Abuse and Mental Health Services Administration

Agency Information Collection Activities: Proposed Collection; Comment Request

In compliance with Section 3506(c)(2)(A) of the Paperwork Reduction Act of 1995 concerning opportunity for public comment on proposed collections of information, the Substance Abuse and Mental Health Services Administration will publish periodic summaries of proposed projects. To request more information on the proposed projects or to obtain a copy of the information collection plans, call the SAMHSA Reports Clearance Officer on (301) 443–7978.

Comments are invited on: (a) Whether the proposed collections of information are necessary for the proper performance of the functions of the agency, including whether the information shall have practical utility; (b) the accuracy of the agency's estimate of the burden of the proposed collection of information; (c) ways to enhance the quality, utility, and clarity of the information to be collected; and (d) ways to minimize the burden of the collection of information on respondents, including through the use of automated collection techniques or other forms of information technology.

Proposed Project: Drug and Alcohol Services Information System (DASIS) (OMB No. 0930–0106, Revision)

The DASIS consists of three related data systems: the National Master Facility Inventory (NMFI), the Uniform Facility Data Set (UFDS), and the Treatment Episode Data Set (TEDS). The NMFI includes all known substance abuse treatment facilities. The UFDS is an annual survey of all substance abuse treatment facilities listed in the NMFI. The TEDS is a compilation of client-level admission data and discharge data submitted by States on clients treated in facilities that receive State funds. Together, they provide information on the location, scope and characteristics of all known drug and alcohol treatment facilities in the United States, and the characteristics of clients receiving services. This information is needed to assess the nature and extent of these resources, to identify gaps in services, and to provide a database for treatment referrals.

A request is being prepared for OMB approval of proposed revisions to the annual UFDS survey. The following changes are proposed: (1) The UFDS survey will be conducted by mail, rather than by telephone; (2) Non-treatment (prevention) facilities will no longer be included in the annual survey; (3) Some questions will be reinstated (*e.g.,* whether facility provides DUI/DWI services, percent of clients treated for alcohol abuse, drug abuse, or both); (4) Several questions will be added (*e.g.,* whether facility treats only incarcerated or DUI/DWI clients, whether services are provided in languages other than English, availability of fully subsidized care or a sliding fee scale, receipt of public funding); (5) Some questions will be deleted (*e.g.,* whether facility is a school, social services agency, community mental health center, community health center, or private group practice; facility accreditation; percent of clients being treated for substance abuse); (6) Several questions will be revised. Changes to the TEDS and NMFI are not planned.

Estimated annual burden for the DASIS activities is shown below.

Type of respondent and activity	Number of respondents	Responses per respondent	Hours per response	Total burden hours
States				
TEDS Admission Data[1]	52	4	6	1,248
TEDS Discharge Data[1]	13	4	6	312
NFR Update[1,2]	56	128	0.08	573
State Subtotal[1]	56			2,133
Facilities				
UFDS Questionnaire	17,000	1	.6	10,200
Pre-screening of newly-identified facilities	2,000	1	.08	160
Facility Subtotal	19,000			10,360

Type of respondent and activity	Number of respondents	Responses per respondent	Hours per response	Total burden hours
Total	19,056			12,493

[1] The burden estimates for these activities are unchanged.
[2] States forward to SAMHSA information on newly licensed/approved facilities and on changes in facility name, address, status, etc. This is done electronically by nearly all States.

Send comments to Nancy Pearce, SAMHSA Reports Clearance Officer, Room 16–105, Parklawn Building, 5600 Fishers Lane, Rockville, MD 20857. Written comments should be received within 60 days of this notice.

Dated: January 6, 2000.

Richard Kopanda,

Executive Officer, SAMHSA.

[FR Doc. 00–796 Filed 1–12–00; 8:45 am]

BILLING CODE 4162–20–P

DEPARTMENT OF THE INTERIOR

Fish and Wildlife Service

Endangered Species Permit Applications

AGENCY: Fish and Wildlife Service, Interior.

ACTION: Notice of receipt of permit applications.

SUMMARY: The following applicants have applied for a scientific research permit to conduct certain activities with endangered species pursuant to section 10(a)(1)(A) of the Endangered Species Act of 1973, as amended (16 USC 1531 *et seq.*).

[Permit No. TE–005535]

Applicant: Gilbert Goodlett, Ridgecrest, California

The permittee requests an amendment to take (survey by pursuit) the Quino checkerspot butterfly (*Euphydryas editha quino*) in conjunction with presence or absence surveys throughout its range for the purpose of enhancing its survival.

[Permit No. TE–020387]

Applicant: Tahirih Linz, San Diego, California

The applicant requests a permit to take (survey by pursuit) the Quino checkerspot butterfly (*Euphydryas editha quino*) in conjunction with presence or absence surveys throughout its range for the purpose of enhancing its survival.

[Permit No. TE–020384]

Applicant: Devon Thomas, San Diego, California

The applicant requests a permit to take (survey by pursuit) the Quino checkerspot butterfly (*Euphydryas editha quino*) in conjunction with presence or absence surveys throughout its range for the purpose of enhancing its survival.

[Permit No. TE–797233]

Applicant: Entomological Consulting Services, LTD., Pleasant Hill, California

The permittee requests an amendment to take (harass, pursue, capture, collect) the El Segundo blue butterfly (*Euphilotes battoides alllyni*) in conjunction with monitoring, surveys, and life history studies throughout its range in California for the purpose of enhancing its survival.

[Permit No. TE–007277]

Applicant: Carol Hertzog, Oceanside, California

The permittee requests an amendment to take (survey by pursuit) the Quino checkerspot butterfly (*Euphydryas editha quino*) in conjunction with presence or absence surveys throughout its range for the purpose of enhancing its survival.

[Permit No. TE–807078]

Applicant: Point Reyes Bird Observatory, Stinson Beach, California

The permittee requests an amendment to take (harass by survey using vocalizations and nest monitor) the California clapper rail (*Rallus longirostris obsoletus*) in conjunction with presence or absence surveys and monitoring activities throughout its range for the purpose of enhancing its survival.

[Permit No. TE–797315]

Applicant: Michael Morrison, Sacramento, California

The permittee requests an amendment to take (capture, mark, collect tissue samples) the Fresno kangaroo rat (*Dipodomys nitratoides exilis*) in conjunction with surveys, genetic research, and population studies in Fresno and Merced Counties, California for the purpose of enhancing its survival.

[Permit No. TE–787924]

Applicant: Marcus Spiegelberg, San Diego, California

The permittee requests an amendment to take (harass by survey, collect, and sacrifice) the Conservancy fairy shrimp (*Branchinecta conservatio*), longhorn fairy shrimp (*Branchinecta longiantenna*), vernal pool tadpole shrimp (*Lepidurus packardi*), San Diego fairy shrimp (*Brachinecta sandiegonensis*), and the Riverside fairy shrimp (*Streptocephalus woottoni*); take (survey by pursuit) the Quino checkerspot butterfly (*Euphydras editha quino*); and take (capture) the San Bernardino kangaroo rat (*Dipodomys merriami parvus*) throughout each species range in California in conjunction with surveys and population monitoring for the purpose of enhancing their survival.

[Permit No. TE–797267]

Applicant: H.T. Harvey and Associates, San Jose, California

The permittee requests an amendment to take (capture) the Santa Cruz long-toed salamander (*Ambystoma macrodctylum croceum*), San Francisco garter snake (*Thamnophis sirtalis tetrateania*), and the blunt-nosed leopard lizard (*Gambelia sila*) in conjunction with surveys throughout each species range for the purpose of enhancing their survival.

[Permit No. TE–814215]

Applicant: Claude Edwards, San Diego, California

The permittee requests an amendment to take (survey by pursuit) the Laguna Mountain skipper (*Pyrgus ruralis lagunae*) in conjunction with presence or absence surveys throughout its range for the purpose of enhancing its survival.

[Permit No. TE–783928]

Applicant: California Department of Transportation, San Diego, California

The permittee requests an amendment to take (harass by survey) the southwestern willow flycatcher (*Empidonax extimus traillii*) in conjunction with presence or absence surveys in San Diego and Imperial Counties, California for the purpose of enhancing its survival.

[Permit No. TE–020557]

Applicant: Malik Tamimi, San Diego, California

The applicant requests a permit to take (survey by pursuit) the Quino checkerspot butterfly (*Euphydryas editha quino*) in conjunction with

presence or absence surveys throughout its range for the purpose of enhancing its survival.

[Permit No. TE–786714]

Applicant: Elyssa Robertson, El Cajon, California

The permittee requests an amendment to take (survey by pursuit) the Quino checkerspot butterfly (*Euphydryas editha quino*) in conjunction with presence or absence surveys throughout its range for the purpose of enhancing its survival.

[Permit No. TE–799570]

Applicant: Carol Witham, Davis, California

The permittee requests an amendment to take (harass by survey, collect, and sacrifice) the San Diego fairy shrimp (*Brachinecta sandiegonensis*) and the Riverside fairy shrimp (*Streptocephalus woottoni*) throughout each species range in California in conjunction with surveys and population monitoring for the purpose of enhancing their survival.

DATES: Written comments on these permit applications must be received on or before February 14, 2000.

ADDRESSES: Written data or comments should be submitted to the Chief—Endangered Species, Ecological Services, Fish and Wildlife Service, 911 N.E. 11th Avenue, Portland, Oregon 97232–4181; Fax: (503) 231–6243. Please refer to the respective permit number for each application when submitting comments. All comments received, including names and addresses, will become part of the official administrative record and may be made available to the public.

FOR FURTHER INFORMATION CONTACT: Documents and other information submitted with these applications are available for review, subject to the requirements of the Privacy Act and Freedom of Information Act, by any party who submits a written request for a copy of such documents within 20 days of the date of publication of this notice to the address above; telephone: (503) 231–2063. Please refer to the respective permit number for each application when requesting copies of documents.

Dated: January 5, 2000.

Thomas Dwyer,

Acting Regional Director, Region 1, Portland, Oregon.

[FR Doc. 00–799 Filed 1–12–00; 8:45 am]

BILLING CODE 4310–55–P

DEPARTMENT OF THE INTERIOR

Fish and Wildlife Service

Notice of Availability of an Environmental Assessment/Habitat Conservation Plan and Receipt of an Application for Incidental Take Permit for Houston Toad (*Bufo houstonensis*) During Construction of a Single Family Residence on 5.06 Acres on Lot 18 in Section One of the Circle D Subdivision in Bastrop County, Texas

SUMMARY: James L. Adams (Applicant) has applied to the U.S. Fish and Wildlife Service (Service) for an incidental take permit pursuant to Section 10(a) of the Endangered Species Act (Act). The Applicant has been assigned permit number TE–021226–0. The requested permit, which is for a period of 5 years, would authorize the incidental take of the endangered Houston toad (*Bufo houstonensis*). The proposed take would occur as a result of the construction of a single family residence on Lot 18 in Section One of the Circle D Subdivision, Bastrop County, Texas.

The Service has prepared the Environmental Assessment/Habitat Conservation Plan (EA/HCP) for the incidental take application. A determination of jeopardy to the species or a Finding of No Significant Impact (FONSI) will not be made until at least 30 days from the date of publication of this notice. This notice is provided pursuant to Section 10(c) of the Act and National Environmental Policy Act regulations (40 CFR 1506.6).

DATES: Written comments on the application should be received on or before February 14, 2000.

ADDRESSES: Persons wishing to review the application may obtain a copy by writing to the Regional Director, U.S. Fish and Wildlife Service, P.O. Box 1306, Albuquerque, New Mexico 87103. Persons wishing to review the EA/HCP may obtain a copy by contacting Scott Rowin, Ecological Services Field Office, 10711 Burnet Road, Suite 200, Austin, Texas 78758 (512/490–0063). Documents will be available for public inspection by written request, by appointment only, during normal business hours (8:00 to 4:30) at the U.S. Fish and Wildlife Service, Austin, Texas. Written data or comments concerning the application and EA/HCP should be submitted to the Field Supervisor, Ecological Services Field Office, Austin, Texas at the above address. Please refer to permit number TE–021226–0 when submitting comments.

FOR FURTHER INFORMATION CONTACT: Scott Rowin at the above Austin Ecological Services Field Office.

SUPPLEMENTARY INFORMATION: Section 9 of the Act prohibits the ''taking'' of endangered species such as the Houston toad. However, the Service, under limited circumstances, may issue permits to take endangered wildlife species incidental to, and not the purpose of, otherwise lawful activities. Regulations governing permits for endangered species are at 50 CFR 17.22.

APPLICANT: James L. Adams plans to construct a single family residence on 5.06 acres platted as Lot 18 in Section One of the Circle D Subdivision, Bastrop County, Texas. This action will eliminate less than one acre of habitat. The applicant proposes to mitigate for this incidental take of the Houston toad by donating $1,500 into the National Fish and Wildlife Foundation for the specific purpose of land acquisition and management within Houston toad habitat, as identified by the Service.

Alternatives to this action were rejected because not developing the subject property with federally listed species present was not economically feasible and alteration of the project design would not alter the level of impacts.

Geoffrey L. Haskett,

Regional Director, Region 2, Albuquerque, New Mexico.

[FR Doc. 00–800 Filed 1–12–00; 8:45 am]

BILLING CODE 4510–55–U

DEPARTMENT OF THE INTERIOR

Fish and Wildlife Service

Natural Gas Pipeline Right-of-Way Permit Application to Cross Grand Bay National Wildlife Refuge

AGENCY: Fish and Wildlife Service, Department of the Interior.

AGENCY: Notice.

SUMMARY: This Notice advises the public that Mississippi Power Company, has applied for a right-of-way permit for the installation of a twenty (20) inch outer-diameter natural gas pipeline across 3.02 acres of Grand Bay National Wildlife Refuge in Jackson County, Mississippi, described as follows:

A right-of-way with a beginning width of fifty (50) feet on, over, across, and through that part of the Grand Bay National Wildlife Refuge (NWR) lying and being in Jackson County, Mississippi. The proposed route is paralleling, adjacent, and south of the existing railroad and transmission rights-of-way.

Commencing at the SW corner of the SE¼ of Section 18, Township 6 South, Range 5 West, thence run North 349.97 feet to the point of beginning; thence S 89 46 58 E, 2632.46 feet to the East line of Section 18. Said right-of-way contains 3.02 acres, more or less.

Also for the purpose and duration of the initial construction and installation of the proposed pipeline, a temporary right-of-way and work space twenty-five (25) feet in width located on the north side of the proposed right-of-way.

The purpose of this notice is to inform the public that the United States Fish and Wildlife Service is currently considering the merits of approving this application.

DATES: Interested persons desiring to comment on this application should do so on or before February 14, 2000.

ADDRESSES: If you wish to comment, you may submit your comments by any one of several methods. You may mail comments to Regional Director, U.S. Fish and Wildlife Service, 1875 Century Boulevard, Room 420, Atlanta, Georgia 30345. You may also comment via the Internet to *Sam ____ Hamilton@fws.gov.* Please submit Internet comments as an ASCII file avoiding the use of special characters and any form of encryption. Please also include ''Attn: Brenda Johnson'' and your name and return address in your internet message. If you do not receive a confirmation from the system that we have received your Internet message, contact us at U.S. Fish and Wildlife Service, Division of Realty, Brenda Johnson, 1–800–419–9582. Finally, you may hand-deliver comments to Regional Director, U.S. Fish and Wildlife Service, 1875 Century Boulevard, Suite 400, Atlanta, Georgia 30345. Our practice is to make comments, including names and home addresses of respondents, available for public review during regular business hours. Individual respondents may request that we withhold their home address from the rulemaking record, which we will honor to the extent allowable by law. There also may be circumstances in which we would withhold from the rulemaking record a respondent's identity, as allowable by law. If you wish to withhold your name and/or address, you must state this prominently at the beginning of your comment. However, we will not consider anonymous comments. We will make all submissions from organizations or businesses, and from individuals identifying themselves as representatives or officials of organizations or businesses, available for public inspection in their entirety.

FOR FURTHER INFORMATION CONTACT: Brenda Johnson, Realty Specialist, at the above Atlanta, Georgia, address (404) 679–7202 or FAX (404) 679–7273.

Right-of-way applications are filed in accordance with Section 28 of the Mineral Leasing Act of 1920 (41 Stat. 449:30 U.S.C. 185), as amended by Public Law 93–153.

Sam D. Hamilton,

Regional Director.

[FR Doc. 00–847 Filed 1–12–00; 8:45 am]

BILLING CODE 4310–55–M

DEPARTMENT OF THE INTERIOR

Geological Survey

Request for Public Comments on Proposed Information Collection to be Submitted to the Office of Management and Budget for Review Under the Paperwork Reduction Act

The proposal for the collection of information described below will be submitted to the Office of Management and Budget for approval under the provisions of the Paperwork Reduction Act (44 U.S.C. Chapter 35). Copies of the proposed collection of information and related forms may be obtained by contacting the Bureau's clearance officer at the phone number listed below. Comments and suggestions on the proposal should be made within 60 days directly to the Bureau clearance officer, U.S. Geological Survey, 807 National Center, 12201 Sunrise Valley Drive, Reston, Virginia, 20192, telephone (703) 648–7313.

Specific public comments are requested as to:

1. whether the collection of information is necessary for the proper performance of the functions on the bureaus, including whether the information will have practical utility;

2. the accuracy of the bureau's estimate of the burden of the collection of information, including the validity of the methodology and assumptions used:

3. the quality, utility, and clarity of the information to be collected; and

4. how to minimize the burden of the collection of information on those who are to respond, including the use of appropriate automated, electronic, mechanical, or other forms of information technology.

Title: Assessment of the Use and Benefits of Waterfowl Production Areas in Minnesota.

OMB approval number: New collection.

Abstract: Respondents supply information on (1) preferences for recreational and educational activities and experiences associated with Waterfowl Production Areas, (2) the non-economic benefits they accrue from visiting Waterfowl Production Areas, and (3) their attitudes and support toward federal management and acquisition of Waterfowl Management Areas. This information will be used to help improve management of Waterfowl Production Areas and improve the operation of the Waterfowl Production Area program.

Bureau form number: Various.

Frequency: Annually during 2000, 2001, and 2002.

Description of respondents: Visitors to Waterfowl Production Areas in the state of Minnesota.

Estimated completion time: 0.33 hours (20 minutes).

Annual responses: 600.

Annual burden hours: 200.

Bureau clearance officer: John Cordyack 703–648–7313.

Dated: January 6, 2000.

Dennis B. Fenn,

Chief Biologist.

[FR Doc. 00–846 Filed 1–12–00; 8:45 am]

BILLING CODE 4310–7Y–M

DEPARTMENT OF THE INTERIOR

Bureau of Land Management

[OR–104–6333–HD; GPO–0076]

Closure of Access Roads: Oregon

AGENCY: Bureau of Land Management, Roseburg District, Swiftwater Field Office.

ACTION: Closure of Bureau of Land Management Administered Roads—Douglas County, Oregon.

SUMMARY: Notice is hereby given that certain BLM roads in Douglas County, Oregon are hereby closed to all types of motorized vehicles from January 20, 2000, until this notice is rescinded. The purpose of this road closure is to prevent excessive erosion, and to protect recent BLM investments in road maintenance work.

Personnel that are exempt from the road closure include any federal, state, or local officer, or member of any organized rescue or fire-fighting force in the performance of an official duty. Additional persons authorized by the BLM, Swiftwater Field Manager, may be allowed but must be approved in advance in writing.

The roads included in this closure are designated with the following road numbers: 25–3–19.0, 25–3–30.0, 25–3–30.1, 25–3–32.0, 25–4–13.0, 25–4–14.0, 25–4–35.0, and 25–4–35.1. The spur

roads connected to the designated roads are also closed. The roads are located in Sections 19, 30, and 32 of T.25S., R.3W., and Sections 25, 26, and 35 of T.25S., R.4W., Willamette Meridian, Douglas County, Oregon.

SUPPLEMENTARY INFORMATION: Maps showing the above described area are available at the BLM's Roseburg District Office for public review. The roads closed under this order will be posted with signs at barricaded locations.

The closure is made under the authority of 43 CFR 9268.3(d)(1)(ii) and 8364.1(a). Any person who fails to comply with the provisions of this closure order may be subject to the penalties provided in 43 CFR 8360.0–7, which include a fine not to exceed $1,000.00 and/or imprisonment not to exceed 12 months, as well as the penalties provided under Oregon State law.

EFFECTIVE DATE: This closure is effective from January 20, 2000, until this notice is rescinded.

FOR FURTHER INFORMATION CONTACT: John Patrick, Civil Engineer Technician, at (541) 440–4931, ext. 261.

Dated: January 7, 2000.

William O'Sullivan,

Field Manager, Swiftwater Field Office.

[FR Doc. 00–840 Filed 1–12–00; 8:45 am]

BILLING CODE 4310–33–P

DEPARTMENT OF THE INTERIOR

Bureau of Land Management

[MT019–1060–DH]

Notice of Intent To Prepare an Amendment to the Billings Resource Area Management Plan and Revision of the Herd Management Area Plan, Pryor Mountain Wild Horse Range, MT

AGENCY: Bureau of Land Management, Interior.

ACTION: Notice of intent to prepare an amendment to the Billings Resource Area Management Plan in order to establish an appropriate management level for wild horses, based on the results of eight years of ecological research studies on population genetics and ecosystem modelling. This research represents a synthesis of important issues pertaining to a landscape scale, interdisciplinary evaluation of the effects of wild horses and native ungulates on the rugged Pryor Mountain ecosystem. In addition, the existing 1984 Pryor Mountain Wild Horse Range, Herd Management Area Plan, and the subsequent 1992 Revision, will be revised to update the management of these horses and to consider issues pertaining to public safety and commercial use within the Pryor Mountain Wild Horse Range.

SUMMARY: An RMP Amendment/Environmental Assessment will be prepared to establish the appropriate management level for the number of horses in the Pryor Mountain Wild Horse Herd. This amendment will incorporate results of eight years of ecological research studies on population genetics and ecosystem modelling. Specific studies addressed competitive interactions between the three ungulates inhabiting the area (Bighorn sheep, mule deer, and wild horses), the effects of all ungulates on the vegetation, the conservation genetics of the wild horses and simulations of the predicted effects of different wild horse management scenarios. These efforts resulted from a comprehensive interagency approach involving six agencies including the Bureau of Land Management, National Park Service, U.S. Geological Survey, Montana Dept. of Fish, Wildlife and Parks, Wyoming Game and Fish Department, and the U.S. Forest Service. Major research direction and effort came from the U.S. Geological Survey and Natural Resources Ecology Lab, Colorado State University with participating efforts from Montana State University and the University of Kentucky.

In addition, the Pryor Mountain Wild Horse Range, Herd Management Area Plan, will be revised. Based on previously stated public concern and input, the planned revision will consider issues pertaining to, but not necessarily limited to: long-term preservation of the genetic viability of the Pryor Mountain herd; maintaining an ecological balance within the Pryor ecosystem; use of immunocontraceptive (fertility control) techniques for population control within the wild horse herd; range expansion efforts in order to support a genetically viable wild horse herd; management of existing and/or proposed water sources within the Pryors while considering impacts on horse and wildlife distribution and forage use; permanent road closures in an effort to create retreat areas for wildlife; road improvements on the Pryor horse range for reasons of public safety; limiting indiscriminate shooting on the Pryor horse range for reasons of public safety; and options for controlling future commercialization of the Pryors.

DATES: The Billings Field Office, Bureau of Land Management, plans to hold public scoping meetings, in order to provide opportunities for public comment, during late March 2000. Tentatively, meetings are scheduled for Billings, Montana on March 29 and Lovell, Wyoming on March 30, 2000. Details, regarding planned locations and specific times for these meetings, will be published in local news releases. Any issues, concerns, additional information, or alternatives should be submitted to the BLM at the address below on or before April 7, 2000.

FOR FURTHER INFORMATION CONTACT: Sandra S. Brooks, Field Manager, or Linda Coates-Markle, Wild Horse and Burro Specialist, BLM, PO BOX 36800, 5001 Southgate Drive, Billings, Montana 59107 or 406–896–5013.

SUPPLEMENTARY INFORMATION: Listings, and a brief summary of the above stated research efforts pertaining to the Pryor Mountain Wild Horse Range, may be requested at the above address. Final reports for all research studies should be available to the BLM by mid-February 2000 and this information will then be available to public members upon request. This research represents the ''best available information'' which currently exists with respect to the Pryor Mountain Wild Horse Range. If other documents exist, which public members wish to identify for consideration during the revision process, please provide a copy to the Billings Field Office (address above), on or before April 7, 2000.

Dated: January 7, 2000.

Larry E. Hamilton,

State Director.

[FR Doc. 00–795 Filed 1–12–00; 8:45 am]

BILLING CODE 4310–$$–P

DEPARTMENT OF THE INTERIOR

Minerals Management Service

Status of Outer Continental Shelf Leasing Maps and Official Protraction Diagrams

SUMMARY: Notice is hereby given that effective with this publication, the following Leasing Maps (Louisiana and Texas) and Official Protraction Diagrams (OPDs) last revised on the date indicated are the latest date documents available. These maps and diagrams are on file and available for information only, in the Gulf of Mexico OCS Regional Office, New Orleans, Louisiana. In accordance with Title 43, Code of Federal Regulations, these maps and diagrams are the basic record for the description of mineral and oil and gas lease sales in the geographic areas they represent.

Status and Map/OPD	Latest date	Map/OPD name
1—LA1	September 1, 1999	West Cameron Area.
2—LA1A	May 30, 1997	West Cameron Area, West Addition.
2—LA1B	May 30, 1997	West Cameron Area, South Addition.
1—LA2	September 1, 1999	East Cameron Area.
1—LA2A	September 1, 1999	East Cameron Area, South Addition.
1—LA3	September 1, 1999	Vermilion Area.
1—LA3A	September 1, 1999	South Marsh Island Area.
1—LA3B	September 1, 1999	Vermilion Area, South Addition.
1—LA3C	September 1, 1999	South Marsh Island Area, South Addition.
1—LA3D	September 1, 1999	South Marsh Island Area, North Addition.
1—LA4	September 1, 1999	Eugene Island Area.
1—LA4A	September 1, 1999	Eugene Island Area, South Addition.
1—LA5	September 1, 1999	Ship Shoal Area.
1—LA5A	September 1, 1999	Ship Shoal Area, South Addition.
1— LA6	September 1, 1999	South Timbalier Area.
1—LA6A	September 1, 1999	South Timbalier Area, South Addition.
1—LA6B	September 1, 1999	South Pelto Area
2—LA6C	December 30, 1994	Bay Marchand Area.
1—LA7	September 1, 1999	Grand Isle Area.
1—LA7A	September 1, 1999	Grand Isle Area, South Addition
1—LA8	September 1, 1999	West Delta Area.
1—LA8A	September 1, 1999	West Delta Area, South Addition.
1—LA9	September 1, 1999	South Pass Area.
1—LA9A	September 1, 1999	South Pass Area, South and East Addition.
1—LA10	September 1, 1999	Main Pass Area.
1—LA10A	September 1, 1999	Main Pass Area, South and East Addition.
1—LA10B	September 1, 1999	Breton Sound Area.
1—LA11	September 1, 1999	Chandeleur Area.
1—LA11A	September 1, 1999	Chandeleur Area, East Addition.
2—LA12	May 30, 1997	Sabine Pass Area.
2—NF17–01	September 9, 1998	Tortugas Valley.
1—NG14–03	September 1, 1999	Corpus Christi.
2—NG14–06	September 9, 1998	Port Isabel.
1—NG15–01	September 1, 1999	East Breaks.
2—NG15–02	March 15, 1999	Garden Banks.
1—NG15–03	September 1, 1999	Green Canyon.
2—NG15–04	September 9, 1998	Alaminos Canyon.
3—NG15–05	April 27, 1989	Keathley Canyon.
1—NG15–06	September 1, 1999	Walker Ridge.
3—NG15–08	April 27, 1989	(Unnamed).
3—NG15–09	April 27, 1989	(Unnamed).
1—NG16–01	September 1, 1999	Atwater Valley.
1—NG16–02	September 1, 1999	Lloyd Ridge.
1—NG16–03	September 1, 1999	The Elbow.
1—NG16–04	September 1, 1999	Lund.
1—NG16–05	September 1, 1999	Henderson.
1—NG16–06	September 1, 1999	Vernon Basin.
1—NG16–07	September 1, 1999	Lund South.
1—NG16–08	September 1, 1999	Florida Plain.
1—NG16–09	September 1, 1999	Howell Hook.
1—NG16–11	September 1, 1999	Campeche Escarpment.
2—NG16–12	September 9, 1998	Rankin.
3—NG17–01	June 2, 1983	St. Petersburg.
3—NG17–04	June 2, 1983	Charlotte Harbor.
3—NG17–07	October 24, 1978	Pulley Ridge.
3—NG17–08	October 24, 1978	Miami.
3—NG17–10	September 20,1989	Dry Tortugas.
3—NG17–11	December 16, 1985	Key West.
1—NH15–12	September 1, 1999	Ewing Bank.
1—NH16–04	September 1, 1999	Mobile.
3—NH16–05	April 1, 1992	Pensacola.
1—NH16–07	September 1, 1999	Viosca Knoll.
3—NH16–08	December 2, 1976	Destin Dome.
3—NH16–09	June 2, 1983	Apalachicola.
2—NH16–10	May 1, 1996	Mississippi Canyon.
1—NH16–11	September 1, 1999	De Soto Canyon.
1—NH16–12	September 1, 1999	Florida Middle Ground.
3—NH17–07	June 2, 1983	Gainesville.
3—NH17–10	June 2, 1983	Tarpon Springs.
1—TX1	September 1, 1999	South Padre Island Area.
2—TX1A	September 9, 1998	South Padre Island Area, East Addition.
1—TX2	September 1, 1999	North Padre Island Area.
1—TX2A	September 1, 1999	North Padre Island Area, East Addition.
1—TX3	September 1, 1999	Mustang Island Area.

Status and Map/OPD	Latest date	Map/OPD name
1—TX3A	September 1, 1999	Mustang Island Area, East Addition.
1—TX4	September 1, 1999	Matagorda Island Area.
1—TX5	September 1, 1999	Brazos Area.
1—TX5B	September 1, 1999	Brazos Area, South Addition.
1—TX6	September 1, 1999	Galveston Area.
1—TX6A	September 1, 1999	Galveston Area, South Addition.
1—TX7	September 1, 1999	High Island Area.
2—TX7A	May 30, 1997	High Island Area, East Addition.
2—TX7B	March 15, 1999	High Island Area, South Addition.
2—TX7C	March 15, 1999	High Island Area, East Addition, South Extension.
2—TX8	May 30, 1997	Sabine Pass Area.

Status Code:
1. Revised to digital format.
2. Previously revised to digital format.
3. Non-digital format.

FOR FURTHER INFORMATION CONTACT: Copies of Leasing Maps and Official Protraction Diagrams are $2.00 each. These may be purchased from the Public Information Unit, Information Services Section, Gulf of Mexico OCS Region, Minerals Management Service, 1201 Elmwood Park Boulevard, New Orleans, Louisiana 70123–2394, Telephone (504) 736–2519.

Carolita U. Kallaur,

Associate Director for Offshore Minerals Management Service.

[FR Doc. 00–871 Filed 1–12–00; 8:45 am]

BILLING CODE 4310–MR–P

DEPARTMENT OF JUSTICE

Office of Justice Programs

Agency Information Collection Activities: Comment Request

ACTION: Notice of Information Collection Under Review; (Extension of a currently approved collection); National Corrections Reporting Program.

The Department of Justice, Office of Justice Programs, Bureau of Justice Statistics, has submitted the following information collection request for review and clearance in accordance with the Paperwork Reduction Act of 1995. This proposed information collection is published to obtain comments from the public and affected agencies. Comments are encouraged and will be accepted for ''sixty days'' until March 13, 2000.

If you have additional comments, suggestions, or need a copy of the proposed information collection instrument with instructions or additional information, please contact Ellen Wesley, 202–616–3558, Office of Budget and Management Services, Office of Justice Programs, U.S. Department of Justice, 810 7th Street, NW, Washington, DC 20531.

Written comments and suggestions from the public and affected agencies concerning the proposed collection of information should address one or more of the following four points:

(1) Evaluate whether the proposed collection of information is necessary for the proper performance of the function of the agency, including whether the information will have practical utility;

(2) Evaluate the accuracy of the agency's estimate of the burden of the proposed collection of information, including the validity of the methodology and assumptions used;

(3) Enhance the quality, utility, and clarity of the information to be collected; and

(4) Minimize the burden of the collection of information on those who are to respond, including through the use of appropriate automated, electronic, mechanical, or other technological collection techniques or other forms of information technology, e.g., permitting electronic submission of responses.

Overview of This Information

(1) *Type of information collection:* Extension of a currently approved collection.

(2) *The title of the form/collection:* National Corrections Reporting Program.

(3) *The agency form number, if any, and the applicable component of the Department sponsoring the collection:* Forms: NCRP–1A, NCRP–1B, NCRP–1C, and NCRP–1D. Corrections Unit, Bureau of Justice Statistics, Office of Justice Programs, United States Department of Justice.

(4) *Affected public who will be asked or required to respond, as well as a brief abstract:* State Departments of Corrections. The National Corrections Reporting Program is the only national level data collection that provides information on sentence length, expected time to be served in prison, actual time served by released prisoners, method of release, time served on parole, type of parole discharge, offense composition of offenders entering and exiting prison and parole, and other characteristics of inmates and parolees. The data is used by Department of Justice officials, the U.S. Congress, prison administrators, researchers, and policy makers to assess current trends and patterns in the Nation's correctional populations.

(5) *An estimate of the total number of respondents and the amount of time estimated for an average respondent to respond/reply:* It is estimated that 41 respondents will take an average 2 hours to respond.

(6) *An estimate of the total public burden (in hours) associated with the collection:* 2,196 hours annual burden. If additional information is required contact: Mrs. Brenda E. Dyer, Deputy Clearance Officer, United States Department of Justice, Information Management and Security Staff, Justice Management Division, Suite 1220, National Place, 1331 Pennsylvania Avenue, NW, Washington, DC 20530.

Dated: December 22, 1999.

Brenda E. Dyer,

Department Deputy Clearance Officer, Department of Justice.

[FR Doc. 00–821 Filed 1–12–00; 8:45 am]

BILLING CODE 4410–18–M

DEPARTMENT OF LABOR

Office of the Secretary

Bureau of International Labor Affairs; National Administrative Office; North American Agreement on Labor Cooperation; Notice of Determination Regarding Review of U.S. Submission #9901

AGENCY: Office of the Secretary, Labor.

ACTION: Notice.

SUMMARY: The U.S. National Administrative Office (NAO) gives notice that on January 7, 2000 U.S. Submission #9901 was accepted for review. The submission was filed with the NAO on November 10, 1999 by the Association of Flight Attendants, AFL-CIO, and the Association of Flight Attendants of Mexico. The submission raises concerns about freedom of association and occupational safety and health at the privately owned Mexican airline company, Executive Air Transport, Inc. (TAESA). The submitters allege that Mexico has failed to fulfill obligations under the North American Agreement on Labor Cooperation (NAALC) in connection with freedom of association and protection of the right to organize, the right to bargain collectively, minimum labor standards, and occupational safety and health.

Article 16(3) of the North American Agreement on Labor Cooperation (NAALC) provides for the review of labor law matters in Canada and Mexico by the NAO. The objectives of the review of the submission will be to gather information to assist the NAO to better understand and publicly report on the Government of Mexico's compliance with the obligations set forth in the NAALC.

EFFECTIVE DATE: January 7, 2000.

FOR FURTHER INFORMATION CONTACT: Lewis Karesh, Acting Secretary, U.S. National Administrative Office, Department of Labor, 200 Constitution Avenue, NW, Room C–4327, Washington, DC 20210. Telephone: (202) 501–6653 (this is not a toll-free number).

SUPPLEMENTARY INFORMATION: On November 10, 1999, U.S. Submission #9901 was filed by the Association of Flight Attendants, AFL-CIO, and the Association of Flight Attendants of Mexico (ASSA). The submission raises concerns about freedom of association and occupational safety and health at the privately owned Mexican airline company, Executive Air Transport, Inc. (TAESA).

The submission focuses on the attempts of the flight attendants to organize at TAESA. The submitters allege that efforts to organize at TAESA were hindered by the federal labor board and TAESA management. They assert that the Mexican government has failed to fulfill its obligations under Part 2 of the NAALC to enforce levels of protection, government enforcement action, private action, and procedural guarantees in connection with freedom of association, the right to bargain collectively, minimum labor standards, and prevention of occupational injuries and illnesses.

The procedural guidelines for the NAO, published in the **Federal Register** on April 7, 1994, 59 FR 16660, specify that, in general, the Secretary of the NAO shall accept a submission for review if it raises issues relevant to labor law matters in Canada or Mexico and if a review would further the objectives of the NAALC.

U.S. Submission #9901 relates to labor law matters in Mexico. A review would appear to further the objectives of the NAALC, as set out in Article 1 of the NAALC, among them improving working conditions and living standards in each Party's territory, promoting the set of labor principles, and encouraging publication and exchange of information, data development and coordination to enhance mutually beneficial understanding of the laws and institutions governing labor in each Party's territory.

Accordingly, this submission has been accepted for review of the allegations raised therein. The NAO's decision is not intended to indicate any determination as to the validity or accuracy of the allegations contained in the submission. The objectives of the review will be to gather information to assist the NAO to better understand and publicly report on the freedom of association, the right to organize, and occupational safety and health raised in the submission, including the Government of Mexico's compliance with the obligations agreed to under Articles 2, 3, 4 and 5 of the NAALC. The review will be completed, and a public report issued, within 120 days, or 180 days if circumstances require an extension of time, as set out in the procedural guidelines of the NAO.

Signed at Washington, DC on January 7, 2000.

Lewis Karesh,

Acting Secretary, U.S. National Administrative Office.

[FR Doc. 00–813 Filed 1–12–00; 8:45 am]

BILLING CODE 4510–28–P

LIBRARY OF CONGRESS

Copyright Office

[Docket No. 2000–3 CARP DTRA2]

Digital Performance Right in Sound Recordings and Ephemeral Recordings

AGENCY: Copyright Office, Library of Congress.

ACTION: Initiation of voluntary negotiation period.

SUMMARY: The Copyright Office is announcing the initiation of the voluntary negotiation period for determining reasonable rates and terms for two compulsory licenses, which in one case, allows public performances of sound recordings by means of eligible nonsubscription transmissions, and in the second instance, allows the making of an ephemeral phonorecord of a sound recording in furtherance of making a permitted public performance of the sound recording.

EFFECTIVE DATE: The voluntary negotiation period begins on January 13, 2000.

ADDRESSES: Copies of voluntary license agreements and petitions, if sent by mail, should be addressed to: Copyright Arbitration Royalty Panel (CARP), P.O. Box 70977, Southwest Station, Washington, DC 20024. If hand delivered, they should be brought to: Office of the General Counsel, James Madison Memorial Building, Room LM–403, First and Independence Avenue, SE, Washington, DC 20559–6000.

FOR FURTHER INFORMATION CONTACT: David O. Carson, General Counsel, or Tanya M. Sandros, Attorney Advisor, Copyright Arbitration Royalty Panel, P.O. Box 70977, Southwest Station, Washington, DC 20024. Telephone: (202) 707–8380. Telefax: (202) 252–3423.

SUPPLEMENTARY INFORMATION: In 1995, Congress enacted the Digital Performance Right in Sound Recordings Act of 1995 (''DPRA''), Public Law 104–39, which created an exclusive right for copyright owners of sound recordings, subject to certain limitations, to perform publicly the sound recordings by means of certain digital audio transmissions. Among the limitations on the performance was the creation of a new compulsory license for nonexempt, noninteractive, digital subscription transmissions. 17 U.S.C. 114(f).

The scope of this license was expanded in 1998 upon passage of the Digital Millennium Copyright Act of 1998 (''DMCA'' or ''Act''), Public Law 105–304, in order to allow a nonexempt eligible nonsubscription transmission and a nonexempt transmission by a preexisting satellite digital audio radio service to perform publicly a sound recording in accordance with the terms and rates of the statutory license. 17 U.S.C. 114(a).

An ''eligible nonsubscription transmission'' is a noninteractive, digital audio transmission which, as the name implies, does not require a subscription for receiving the transmission. The transmission must also be made as part of a service that

provides audio programming consisting in whole or in part of performances of sound recordings which purpose is to provide audio or entertainment programming, but not to sell, advertise, or promote particular goods or services. A ''preexisting satellite digital audio radio service'' is a subscription digital audio radio service that received a satellite digital audio radio service license issued by the Federal Communications Commission on or before July 31, 1998. *See* 17 U.S.C. 114(j) (6) and (10). Only two known entities, CD Radio and American Mobile Radio Corporation, qualify under the statutory definition as preexisting satellite digital audio radio services.

In addition to expanding the current section 114 license, the DMCA also created a new statutory license for the making of an ''ephemeral recording'' of a sound recording by certain transmitting organizations. 17 U.S.C. 112(e). The new statutory license allows entities that transmit performances of sound recordings to business establishments, pursuant to the limitations set forth in section 114(d)(1)(C)(iv), to make an ephemeral recording of a sound recording for purposes of a later transmission. The new license also provides a means by which a transmitting entity with a statutory license under section 114(f) can make more than the one phonorecord specified in section 112(a). 17 U.S.C. 112(e).

Determination of Reasonable Terms and Rates

The statutory scheme for establishing reasonable terms and rates is the same for both licenses. The terms and rates for the two new statutory licenses may be determined by voluntary agreement among the affected parties, or if necessary, through compulsory arbitration conducted pursuant to Chapter 8 of the Copyright Act.

If the affected parties are able to negotiate voluntary agreements, then it may not be necessary for these parties to participate in an arbitration proceeding. Similarly, if the parties negotiate an industry-wide agreement, an arbitration may not be needed. In such cases, the Librarian of Congress will follow current rate regulation procedures and notify the public of the proposed agreement in a notice and comment proceeding. If no party with a substantial interest and an intent to participate in an arbitration proceeding files a comment opposing the negotiated rates and terms, the Librarian will adopt the proposed terms and rates without convening a copyright arbitration royalty panel. 37 CFR 251.63(b). If, however, no industry-wide agreement is reached, or only certain parties negotiate license agreements, then those copyright owners and users relying upon one or both of the statutory licenses shall be bound by the terms and rates established through the arbitration process.

Arbitration proceedings cannot be initiated unless a party files a petition for ratemaking with the Librarian of Congress during the 60-day period, beginning July 1, 2000. 17 U.S.C. 112(e)(7) and 114(f)(2)(C)(ii)(II).

On November 27, 1998, the Copyright Office initiated a six-month voluntary negotiation period in accordance with sections 112(e)(4) and 114(f)(2)(A) for the purpose of establishing rates and terms for these licenses for the period beginning on the effective date of the DMCA and ending on December 31, 2000. 63 FR 65555 (November 27, 1998). Parties to these negotiations, however, have been unable to reach agreement on the rates and terms, so in accordance with sections 112(e)(5) and 114(f)(1)(B) the Copyright Office has initiated arbitration proceedings to determine the rates and terms for use of the licenses through December 31, 2000. These proceedings are in progress. 64 FR 52107 (September 27, 1999).

Initiation of the Next Round of Voluntary Negotiations

Unless the schedule has been readjusted by the parties in a previous rate adjustment proceeding, sections 112(e)(7) and 114(f)(2)(C)(i)(II) of the Copyright Act require the publication of a notice during the first week of January 2000, and at 2-year intervals thereafter, initiating the voluntary negotiation periods for determining reasonable rates and terms for the statutory licenses permitting the public performance of a sound recording by means of certain digital transmissions and the making of an ephemeral recording in accordance with section 112(e).

This notice announces the initiation of these negotiation periods. They shall begin on January 13, 2000. Parties who negotiate a voluntary license agreement during this period are encouraged to submit two copies of the agreement to the Copyright Office at the above-listed address within 30 days of its execution.

Petitions

In the absence of a license agreement negotiated under 17 U.S.C. 112(e)(4) or 114(f)(2)(A), those copyright owners of sound recordings and entities availing themselves of the statutory licenses are subject to arbitration upon the filing of a petition by a party with a significant interest in establishing reasonable terms and rates for the statutory licenses. Petitions must be filed in accordance with 17 U.S.C. 112(e)(7), 114(f)(2)(C)(ii)(II), and 803(a)(1) and may be filed anytime during the sixty-day period beginning on July 1, 2000. *See also* 37 CFR 251.61. Parties should submit petitions to the Copyright Office at the address listed in this notice. The petitioner must deliver an original and five copies to the Office.

Dated: January 7, 2000.

David O. Carson,

General Counsel.

[FR Doc. 00–808 Filed 1–12–00; 8:45 am]

BILLING CODE 1410–33–P

NATIONAL AERONAUTICS AND SPACE ADMINISTRATION

[Notice 00–001]

NASA Advisory Council, Life and Microgravity Sciences and Applications Advisory Committee, Space Utilization Advisory Subcommittee; Meeting

AGENCY: National Aeronautics and Space Administration.

ACTION: Notice of meeting.

SUMMARY: In accordance with the Federal Advisory Committee Act, Public Law. 92–463, as amended, the National Aeronautics and Space Administration announces a meeting of the NASA Advisory Council, Life and Microgravity Sciences and Applications Advisory Committee, Space Station Utilization Advisory Subcommittee.

DATES: Wednesday, February 23, 2000, from 8:00 a.m. to 5:00 p.m.

ADDRESSES: Lunar and Planetary Institute, 3600 Bay Area Boulevard, Houston, Texas.

FOR FURTHER INFORMATION CONTACT: Mr. Mark Uhran, Code UM, National Aeronautics and Space Administration, Washington, DC 20546, (202) 358–0813.

SUPPLEMENTARY INFORMATION: The meeting will be open to the public up to the seating capacity of the room. Advance notice of attendance to the Executive Secretary is requested. The agenda for the meeting is as follows:

—Executive Presentations
—Response to Prior Recommendations
—Special Topics
—Development of Draft Recommendations
—Recommendations

It is imperative that the meeting be held on this date to accommodate the scheduling priorities of the key participants. Visitors will be requested to sign a visitor's register.

Dated: January 4, 2000.

Matthew M. Crouch,

Advisory Committee Management Officer, National Aeronautics and Space Administration.

[FR Doc. 00–773 Filed 1–12–00; 8:45 am]

BILLING CODE 7510–01–P

NATIONAL AERONAUTICS AND SPACE ADMINISTRATION

[Notice (00–002)]

NASA Advisory Council, Minority Business Resource Advisory Committee; Meeting

AGENCY: National Aeronautics and Space Administration.

ACTION: Notice of meeting.

SUMMARY: In accordance with the Federal Advisory Committee Act, Public Law 92–463, as amended, the National Aeronautics and Space Administration announces a forthcoming meeting of the NASA Advisory Council, Minority Business Resource Advisory Committee.

DATES: Thursday, January 20, 2000, 9:00 a.m. to 4:00 p.m., and Friday, January 21, 2000, 9:00 a.m. to 4:00 p.m.

ADDRESSES: NASA Headquarters, 300 E Street, SW, Room 9H40, Washington, DC 20546–0001.

FOR FURTHER INFORMATION CONTACT: Mr. Ralph C. Thomas III, Code K, National Aeronautics and Space Administration, Room 9K70, 300 E Street, SW, Washington, DC 20546–0001, (202) 358–2088.

SUPPLEMENTARY INFORMATION: The meeting will be open to the public up to the seating capacity of the room. The agenda for the meeting is as follows:

—Welcome New MBRAC Members

—MBRAC Subpanel Reports

—The Present State of Former NASA SDB Contractors

—Action Items

—Agency Small Disadvantaged Business (SDB) Program

—Report of Chair

—Public Comment

—Summary of MBRAC III Accomplishments

—Report on NASA FY 98 SDB Accomplishments

It is imperative that the meeting be held on these dates to accommodate the scheduling priorities of the key participants. Visitors will be requested to sign a visitor's register.

Dated: January 5, 2000.

Matthew M. Crouch,

Advisory Committee Management Officer, National Aeronautics and Space Administration.

[FR Doc. 00–774 Filed 1–12–00; 8:45 am]

BILLING CODE 7510–01–P

NATIONAL SCIENCE FOUNDATION

Alan T. Waterman Award Committee; Notice of Meeting

In accordance with the Federal Advisory Committee Act (Pub. L. 92–463, as amended), the National Science Foundation announces the following meeting:

Name: Alan T. Waterman Award Committee (1172).

Date/Time: Monday, March 6, 2000, 9:00 a.m.–3:00 p.m.

Place: Arlington, Virginia.

Type of Meeting: Closed.

Contact Person: Mrs. Susan E. Fannoney, Executive Secretary, Room 1220, National Science Foundation, 4201 Wilson Blvd, Arlington, VA 22230. Telephone: 703/306–1096.

Purpose of Meeting: To provide advice and recommendations in the selection of the Alan T. Waterman Award recipient.

Agenda: To review and evaluate nominations as part of the selection process for awards (NSF–99–134).

Reason for Closing: The nominations being reviewed include information of a personal nature where disclosure would constitute unwarranted invasions of personal privacy. These matters are exempt under 5 U.S.C. 552b(c)(6) of the Government in the Sunshine Act.

Dated: January 7, 2000.

Karen J. York,

Committee Management Officer.

[FR Doc. 00–833 Filed 1–12–00; 8:45 am]

BILLING CODE 7555–01–M

NATIONAL SCIENCE FOUNDATION

Special Emphasis Panel in Biological Science: Notice of Meeting

In accordance with the Federal Advisory Committee Act (Pub. L. 92–463, as amended), the National Science Foundation announces the following meeting:

Name: Special Emphasis Panel in Biological Sciences (#1754).

Date/Time: April 5–7, 2000, 8:00 a.m.–5:00 p.m.

Place: National Science Foundation, 4201 Wilson Boulevard, Room 375, Arlington, VA 22230.

Type of Meeting: Closed.

Contact Person: Dr. Scott L. Collins, Program Officer, Mr. Aaron Kinchen, Senior Program Assistant, Ecological Studies, Room 640N, National Science Foundation, 4201 Wilson Boulevard, Arlington, Virginia 22230. Telephone: (703) 306–1479.

Minutes: May be obtained from the contact person listed above.

Purpose of Meeting: To provide advice and recommendations concerning proposals to the National Science Foundation (NSF) for financial support.

Agenda: To review and evaluate proposals submitted in response to the Ecological Studies Ecology Program Solicitation (99–2).

Reason for Closing: The proposals being reviewed include information of a proprietary or confidential nature, including technical information; financial data, such as salaries; and personal information concerning individuals associated with the proposals. These matters are exempt under 5 U.S.C. 552b(c) (4) and (6) of the Government in the Sunshine Act.

Dated: January 7, 2000.

Karen J. York,

Committee Management Officer.

[FR Doc. 00–823 Filed 1–12–00; 8:45 am]

BILLING CODE 7555–01–M

NATIONAL SCIENCE FOUNDATION

Special Emphasis Panel in Biological Science: Notice of Meeting

In accordance with the Federal Advisory Committee Act (Pub. L. 92–463, as amended), the National Science Foundation announces the following meeting:

Name: Special Emphasis Panel in Biological Sciences (#1754).

Date/Time: May 17–20, 2000, 8:00 a.m.–5:00 p.m.

Place: National Science Foundation, 4201 Wilson Boulevard, Room 375, Arlington, VA 22230.

Type of Meeting: Closed.

Contact Person: Dr. Scott L. Collins, Program Officer or Mr. Aaron Kinchen, Senior Program Assistant, Ecological Studies, Room 640N, National Science Foundation, 4201 Wilson Boulevard, Arlington, Virginia 22230. Telephone: (703) 306–1479.

Minutes: May be obtained from the contact person listed above.

Purpose of Meeting: To provide advice and recommendations concerning proposals to the National Science Foundation (NSF) for financial support.

Agenda: To review and evaluate proposals submitted in response to the Ecological Studies Ecology Program Solicitation (99–2).

Reason for Closing: The proposals being reviewed include information of a proprietary or confidential nature, including technical information; financial data, such as salaries; and personal information concerning individuals associated with the proposals. These matters are exempt under 5 U.S.C. 552b(c), (4) and (6) of the Government in the Sunshine Act.

Dated: January 7, 2000.

Karen J. York,

Committee Management Officer.

[FR Doc. 00–829 Filed 1–12–00; 8:45 am]

BILLING CODE 7555–01–M

NATIONAL SCIENCE FOUNDATION

Special Emphasis Panel in Biological Sciences; Notice of Meeting

In accordance with the Federal Advisory Committee Act (Pub. L. 92–463, as amended), the National Science Foundation announces the following meeting:

Name: Special Emphasis Panel in Biological Sciences (#1754).

Date/Time: January 28, 2000, 8:00 a.m.–5:00 p.m.

Place: Room 605, National Science Foundation, 4201 Wilson Blvd., Arlington, VA 22230.

Type of Meeting: Closed.

Contact Person: Dr. Gerald Selzer, Program Director, Living Stock Collections, Room 615, Division of Biological Infrastructure, National Science Foundation, 4201 Wilson Blvd., Arlington, VA 22230. Telephone: 703–306–1469.

Minutes: May be obtained from the contact person listed above.

Purpose of Meeting: To provide advice and recommendations concerning proposals submitted to NSF for financial support.

Agenda: To review and evaluate Living Stock Collections proposals submitted in response to the program announcement (NSF 97–80).

Reason for Closing: The proposals being reviewed include information of a proprietary or confidential nature, including technical information; financial data, such as salaries; and personal information concerning individuals associated with the proposals. These matters are exempt under 5 U.S.C. 552b(c), (4) and (6) of the Government in the Sunshine Act.

Dated: January 7, 2000.

Karen J. York,

Committee Management Officer.

[FR Doc. 00–830 Filed 1–12–00; 8:45 am]

BILLING CODE 7555–01–M

NATIONAL SCIENCE FOUNDATION

Special Emphasis Panel in Biological Science; Notice of Meeting

In accordance with the Federal Advisory Committee Act (Pub. L. 92–463, as amended), the National Science Foundation announces the following meeting.

Name: Special Emphasis Panel in Biological Sciences (#1754).

Date/Time: April 6–7, 2000, 8:00 a.m.–6:00 p.m.

Place: National Science Foundation, 4201 Wilson Boulevard, Room 375, Arlington, VA 22230.

Type of Meeting: Closed.

Contact Person: Dr. Penelope Firth, Program Officer or Dr. Edward T. Elliott, Program Officer, Ecological Studies, Room 640N, National Science Foundation, 4201 Wilson Boulevard, Arlington, VA 22230. Telephone: (703) 306–1479.

Minutes: May be obtained from the contact person listed above.

Purpose of Meeting: To provide advice and recommendations concerning proposals to the National Science Foundation (NSF) for financial support.

Agenda: To review and evaluate proposals submitted in response to the Ecological Studies Ecosystem Studies Program Solicitation (99–2).

Reason for Closing: The proposals being reviewed include information of a proprietary or confidential nature, including technical information; financial data, such as salaries; and personal information concerning individuals associated with the proposals. These matters are exempt under 5 U.S.C. 552b(c), (4) and (6) of the Government in the Sunshine Act.

Dated: January 7, 2000.

Karen J. York,

Committee Management Officer.

[FR Doc. 00–831 Filed 1–12–00; 8:45 am]

BILLING CODE 7555–01–M

NATIONAL SCIENCE FOUNDATION

Special Emphasis Panel in Biological Science: Notice of Meeting

In accordance with the Federal Advisory Committee Act (Pub. L. 92–463, as amended), the National Science Foundation announces the following meeting:

Name: Special Emphasis Panel in Biological Sciences (#1754).

Date/Time: April 5–7, 2000, 8:00 a.m.–5:00 p.m.

Place: National Science Foundation, 4201 Wilson Boulevard, Room 375, Arlington, VA 2230.

Type of Meeting: Closed.

Contact Person: Dr. Scott L. Collins, Program Officer, Mr. Aaron Kinchen, Senior Program Assistant, Ecological Studies, Room 640N, National Science Foundation, 4201 Wilson Boulevard, Arlington, Virginia 22230. Telephone: (703) 306–1479.

Minutes: May be obtained from the contact person listed above.

Purpose of Meeting: To provide advice and recommendations concerning proposals to the National Science Foundation (NSF) for financial support.

Agenda: To review and evaluate proposals submitted in response to the Ecological Studies Ecology Program Solicitation (99–2).

Reason for Closing: The proposals being reviewed include information of a proprietary or confidential nature, including technical information; financial data, such as salaries; and personal information concerning individuals associated with the proposals. These matters are exempt under 5 U.S.C. 552b(c), (4) and (6) of the Government in the Sunshine Act.

Dated: January 7, 2000.

Karen J. York,

Committee Management Officer.

[FR Doc. 00–832 Filed 1–12–00; 8:45 am]

BILLING CODE 7555–01–M

NATIONAL SCIENCE FOUNDATION

Special Emphasis Panel in Computing—Communications Research; Notice of Meeting

In accordance with the Federal Advisory Committee Act (Pub. L. 92–463, as amended), the National Science Foundation announces the following meeting:

Name: Special Emphasis Panel in Computing—Communications Research (1192).

Date/Time: January 27, 2000; 8:00 a.m.–5:00 p.m.

Place: National Science Foundation, 4201 Wilson Boulevard, Room 1150, Arlington, VA, 22230.

Type of Meeting: Closed.

Contact Person: Robert B. Grafton, Program Director, Design Automation Program, CISE/CCR, Room 1145, National Science Foundation, 4201 Wilson Blvd., Arlington, Virginia 22230. (703) 306–1936.

Minutes: May be obtained from the contact person listed above.

Purpose of Meeting: To provide advice and recommendations concerning proposals submitted to NSF for financial support.

Agenda: To review and evaluate Communications Research proposals as a part of the selection process for awards.

Reason for Closing: The proposals being reviewed include information of a proprietary or confidential nature, including technical information, financial data, such as salaries, and personal information concerning individuals associated with the proposals. These matters are exempt under 5 U.S.C. 552b(c), (4) and (6) of the Government in the Sunshine Act.

Dated: January 7, 2000.

Karen J. York,

Committee Management Officer.

[FR Doc. 00–825 Filed 1–12–00; 8:45 am]

BILLING CODE 7555–01–M

NATIONAL SCIENCE FOUNDATION

Special Emphasis Panel in Electrical and Communications Systems; Notice of Meeting

In accordance with the Federal Advisory Committee Act (Pub. L. 92–463, as amended), the National Science Foundation announces the following meeting:

Name: Special Emphasis Panel in Electrical and Communications Systems (1196).

Date/Time: January 27–28, 2000: 8:30 a.m. to 5:00 p.m.

Place: Room 340, National Science Foundation, 4201 Wilson Boulevard, Arlington, VA 22230.

Type of Meeting: Closed.

Contact Person: Dr. Usha Varshney, Program Director, Electronic, Photonics, and Device Technologies (EPDT), Division of Electrical and Communications Systems,

National Science Foundation, 4201 Wilson Blvd., Room 675, Arlington, VA 22230. (703) 306–1339.

Purpose: To provide advice and recommendations concerning proposals submitted to NSF for financial support.

Agenda: To review and evaluate research proposals in the Electronics, Photonics, and Device Technologies program as part of the selection process for awards.

Reason for Closing: The proposals being reviewed include information of a proprietary or confidential nature, including technical information; financial data, such as salaries; and personal information concerning individuals associated with the proposals. These matters are within exemptions 4 and 6 of 5 U.S.C. 552 b(c)(4) and (6) of the Government in the Sunshine Act.

Dated: January 7, 2000.

Karen J. York,

Committee Management Officer.

[FR Doc. 00–835 Filed 1–12–00; 8:45 am]

BILLING CODE 7555–01–M

NATIONAL SCIENCE FOUNDATION

Special Emphasis Panel in Graduate Education; Notice of Meeting

In accordance with the Federal Advisory Committee Act (Pub. L. 92–463, as amended), the National Science Foundation announces the following meeting:

Name: Special Emphasis Panel in Graduate Education (#57).

Date/Time: February 12–15, 2000 and February 16–19, 2000; 8:00 a.m.–5:00 p.m.

Place: The Doubletree Hotel in Arlington, 300 Army Navy Drive, Arlington, VA 22202.

Type of Meeting: Closed.

Contact Person: Dr. Janet C. Rutledge, Program Director, Division of Graduate Education, Room 907, National Science Foundation, 4201 Wilson Boulevard, VA 22230 Telephone: (703) 306–1694.

Minutes: May be obtained from the contact person listed above.

Purpose of Meeting: To provide advice and recommendations concerning applications submitted to NSF for financial support.

Agenda: To review and evaluate applications submitted to the Division of Graduate Education as part of the selection process for awards.

Reason for Closing: The applications being reviewed include information of a proprietary or confidential nature, including technical information and personal information concerning individuals associated with the applications. These matters are exempt under 5 U.S.C. 552b(c), (4) and (6) of the Government in the Sunshine Act.

Dated: January 7, 2000.

Karen J. York,

Committee Management Officer.

[FR Doc. 00–824 Filed 1–12–00; 8:45 am]

BILLING CODE 7555–01–M

NATIONAL SCIENCE FOUNDATION

Special Emphasis Panel in Mathematical Sciences; Notice of Meeting

In accordance with the Federal Advisory Committee Act (Pub. L. 92–463, as amended), the National Science Foundation announces the following meeting.

Name: Special Emphasis Panel in Mathematical Sciences (1204).

Date/Time: March 2–4, 2000; 8 a.m.–5 p.m.

Place: National Science Foundation, 4201 Wilson Boulevard, Room 1060, Arlington, VA.

Type of Meeting: Closed.

Contact Person: Deborah F. Lockhart, Jong-Shi Pang, and Michael Steurewalt, Program Directors, Applied Mathematics, Room 1025, National Science Foundation, 4201 Wilson Boulevard, Arlington, VA 22230. Telephone: (703) 306–1870.

Minutes: May be obtained from the contact person listed above.

Purpose of Meeting: To provide advice and recommendations concerning proposals submitted to NSF for financial support.

Agenda: To review and evaluate proposals submitted to the Applied Mathematics Program, as a part of the selection process for awards.

Reason for Closing: The proposals being reviewed include information of a proprietary or confidential nature, including technical information; financial data, such as salaries and personal information concerning individuals associated with the proposals. These matters are exempt under 5 U.S.C. 552b(c), (4) and (6) of the Government in the Sunshine Act.

Dated: January 7, 2000.

Karen J. York,

Committee Management Officer.

[FR Doc. 00–826 Filed 1–12–00; 8:45 am]

BILLING CODE 7555–01–M

NATIONAL SCIENCE FOUNDATION

Special Emphasis Panel in Mathematical Sciences; Notice of Meeting

In accordance with the Federal Advisory Committee Act (Pub. L. 92–463, as amended), the National Science Foundation announces the following meeting.

Name: Special Emphasis Panel in Mathematical Sciences (1204).

Date/Time: February 3–5, 2000; 8:00 a.m.–5:00 p.m.

Place: National Science Foundation, 4201 Wilson Boulevard, Room 1020, Arlington, VA.

Type of Meeting: Closed.

Contact Person: Henry Warchall, Program Director, Applied Mathematics Program, Room 1025, National Science Foundation, 4201 Wilson Boulevard, Arlington, VA 22230. Telephone: (703) 306–1870.

Minutes: May be obtained from the contact person listed above.

Purpose of Meeting: To provide advice and recommendations concerning proposals submitted to NSF for financial support.

Agenda: To review and evaluate proposals submitted to the Applied PDE Program, as a part of the selection process for awards.

Reason for Closing: The proposals being reviewed include information of a proprietary or confidential nature, including technical information; financial data, such as salaries and personal information concerning individuals associated with the proposals. These matters are exempt under 5 U.S.C. 552b(c), (4) and (6) of the Government in the Sunshine Act.

Dated: January 7, 2000.

Karen J. York,

Committee Management Officer.

[FR Doc. 00–827 Filed 1–12–00; 8:45 am]

BILLING CODE 7555–01–M

NATIONAL SCIENCE FOUNDATION

Special Emphasis Panel in Mathematical Sciences; Notice of Meeting

In accordance with the Federal Advisory Committee Act (Pub. L. 92–463, as amended), the National Science Foundation announces the following meeting.

Name: Special Emphasis Panel in Mathematical Sciences (1204).

Date/Time: January 24–26, 2000; 8:30 a.m.–5 p.m.

Place: National Science Foundation, 4201 Wilson Boulevard, Room 360, Arlington, VA.

Type of Meeting: Closed.

Contact Person: Dr. Alvin Thaler, Program Director, Room 1025, National Science Foundation, 4201 Wilson Boulevard, Arlington, VA 22230. Telephone: (703) 306–1880.

Minutes: May be obtained from the contact person listed above.

Purpose of Meeting: To provide advice and recommendations concerning proposals submitted to NSF for financial support.

Agenda: To review and evaluate proposals submitted to the Algebra and Number Theory Program, as a part of the selection process for awards.

Reason for Closing: The proposals being reviewed include information of a proprietary or confidential nature, including technical information; financial data, such as salaries and personal information concerning individuals associated with the proposals. These matters are exempt under 5 U.S.C. 552b(c), (4) and (6) of the Government in the Sunshine Act.

Dated: January 7, 2000.

Karen J. York,

Committee Management Officer.

[FR Doc. 00–828 Filed 1–12–00; 8:45 am]

BILLING CODE 7555–01–M

NATIONAL SCIENCE FOUNDATION

Special Emphasis Panel in Mathematical Sciences; Notice of Meeting

In accordance with the Federal Advisory Committee Act (Pub. L. 92–463, as amended), the National Science Foundation announced the following meeting.

Name: Special Emphasis Panel in Mathematical Sciences (1204).

Date/Time: February 17–19, 2000, 8 am–5 pm.

Place: National Science Foundation, 4201 Wilson Boulevard, Arlington, VA.

Type of Meeting: Closed.

Contact Person: Hans Engler, Program Director, Applied Mathematics Program, Room 1025, National Science Foundation, 4201 Wilson Boulevard, Arlington, VA 22230. Telephone: (703) 306–1870.

Minutes: May be obtained from the contact person listed above.

Purpose of Meeting: To provide advice and recommendations concerning proposals submitted to NSF for financial support.

Agenda: To review and evaluate proposals concerning Materials and Mechanic Research in the Mathematical Sciences as part of the selection process for awards.

Reason for Closing: The proposals being reviewed include information of a proprietary or confidential nature, including technical information; financial data, such as salaries and personal information concerning individuals associated with the proposals. These matters are exempt under 5 U.S.C. 552b(c) (4) and (6) of the Government in the Sunshine Act.

Dated: January 7, 2000.

Karen J. York,

Committee Management Officer.

[FR Doc 00–834 Filed 1–12–00; 8:45 am]

BILLING CODE 7555–01–M

NUCLEAR REGULATORY COMMISSION

Indiana Michigan Power Company

[Docket Nos. 50–315 and 50–316]

Notice of Consideration of Issuance of Amendment to Facility Operating License, Proposed No Significant Hazards Consideration Determination, and Opportunity for a Hearing

The U.S. Nuclear Regulatory Commission (the Commission) is considering issuance of amendments to Facility Operating License Nos. DPR–58 and DPR–74 issued to Indiana Michigan Power Company (the licensee) for operation of the Donald C. Cook Nuclear Power Plant, Units 1 and 2, located in Berrien County, Michigan.

The proposed amendments would delete the Donald C. Cook (D.C. Cook), Unit 1 and 2, Technical Specification (TS) 5.4.2, ''Reactor Coolant System Volume,'' because the information regarding the reactor coolant system (RCS) is not required by TS Section 5.0, ''Design Features,'' for compliance with 10 CFR 50.36(c)(4). Changes to the RCS volume information are included in the D.C. Cook Updated Final Safety Analyses Report (UFSAR), and are controlled in accordance with 10 CFR 50.59.

Before issuance of the proposed license amendment, the Commission will have made findings required by the Atomic Energy Act of 1954, as amended (the Act), and the Commission's regulations.

The Commission has made a proposed determination that the amendment request involves no significant hazards consideration. Under the Commission's regulations in 10 CFR 50.92, this means that operation of the facility in accordance with the proposed amendment would not (1) involve a significant increase in the probability or consequences of an accident previously evaluated; or (2) create the possibility of a new or different kind of accident from any accident previously evaluated; or (3) involve a significant reduction in a margin of safety. As required by 10 CFR 50.91(a), the licensee has provided its analysis of the issue of no significant hazards consideration, which is presented below:

1. Do the changes involve a significant increase in the probability of occurrence or consequences of an accident previously evaluated?

The proposed change to remove this information from T/S does not affect any accident initiators or precursors. Elimination of the RCS volume information from the T/S does not change the methods for plant operation or actions to be taken in the event of an accident. The quantity of radioactive material available for release in the event of an accident is not increased. Barriers to release of radioactive material are not eliminated or otherwise changed. More detailed and complete RCS component and piping volume information is included in the CNP [Cook Nuclear Plant] UFSAR, and changes to that information would be evaluated prior to implementation in accordance with 10 CFR 50.59. In addition, the proposed administrative format changes do not affect any of the technical content of the T/S.

Therefore, there is no significant increase in the probability of occurrence or consequences of an accident previously evaluated.

2. Do the changes create the possibility of a new or different kind of accident from any accident previously evaluated?

The deletion of the RCS volume information from the T/S does not change the methods of plant operation or modify plant systems, structures, or components. No new methods of plant operation are created. As such, the proposed change does not affect any accident initiators or precursors or create new accident initiators or precursors. More detailed and complete RCS component and piping volume information is included in the CNP UFSAR, and any changes to that information would be evaluated prior to implementation in accordance with 10 CFR 50.59. In addition, the proposed administrative format changes do not affect any of the technical content of the T/S.

Therefore, the proposed change does not create the possibility of a new or different kind of accident from any accident previously evaluated.

3. Do the changes involve a significant reduction in a margin of safety?

The deletion of the RCS volume information from the T/S does not affect safety limits or limiting safety system settings. Plant operational parameters are not affected. The proposed change does not modify the quantity of radioactive material available for release in the event of an accident. As such, the change will not affect any previous safety margin assumptions or conditions. The actual volume of the RCS is not affected by the change, only the location of the text describing the volume. More detailed and complete RCS component and piping volume information is included in the CNP UFSAR, and any changes to that information would be evaluated prior to implementation in accordance with 10 CFR 50.59. In addition, the proposed administrative format changes do not affect any of the technical content of the T/S.

Therefore, the proposed change does not involve a significant reduction in a margin of safety.

The NRC staff has reviewed the licensee's analysis and, based on this review, it appears that the three standards of 10 CFR 50.92 are satisfied. Therefore, the NRC staff proposes to determine that the amendment request involves no significant hazards consideration.

The Commission is seeking public comments on this proposed determination. Any comments received within 30 days of the date of publication of this notice will be considered in making any final determination.

Normally, the Commission will not issue the amendment until the expiration of the 30-day notice period. However, should circumstances change during the notice period such that failure to act in a timely way would result, for example, in derating or shutdown of the facility, the Commission may issue the license amendment before the expiration of the 30-day notice period, provided that its final determination is that the amendment involves no significant hazards consideration. The final determination will consider all public and State comments received. Should the Commission take this action, it will

publish in the **Federal Register** a notice of issuance and provide for opportunity for a hearing after issuance. The Commission expects that the need to take this action will occur very infrequently.

Written comments may be submitted by mail to the Chief, Rules and Directives Branch, Division of Administrative Services, Office of Administration, U.S. Nuclear Regulatory Commission, Washington, DC 20555–0001, and should cite the publication date and page number of this **Federal Register** notice. Written comments may also be delivered to Room 6D59, Two White Flint North, 11545 Rockville Pike, Rockville, Maryland, from 7:30 a.m. to 4:15 p.m. Federal workdays. Copies of written comments received may be examined at the NRC Public Document Room, the Gelman Building, 2120 L Street, NW., Washington, DC.

The filing of requests for hearing and petitions for leave to intervene is discussed below.

By February 14, 2000, the licensee may file a request for a hearing with respect to issuance of the amendment to the subject facility operating license and any person whose interest may be affected by this proceeding and who wishes to participate as a party in the proceeding must file a written request for a hearing and a petition for leave to intervene. Requests for a hearing and a petition for leave to intervene shall be filed in accordance with the Commission's ''Rules of Practice for Domestic Licensing Proceedings'' in 10 CFR Part 2. Interested persons should consult a current copy of 10 CFR 2.714, which is available at the Commission's Public Document Room, the Gelman Building, 2120 L Street, NW., Washington, DC, and accessible electronically through the ADAMS Public Electronic Reading Room link at the NRC Web site (http://www.nrc.gov). If a request for a hearing or petition for leave to intervene is filed by the above date, the Commission or an Atomic Safety and Licensing Board, designated by the Commission or by the Chairman of the Atomic Safety and Licensing Board Panel, will rule on the request and/or petition; and the Secretary or the designated Atomic Safety and Licensing Board will issue a notice of hearing or an appropriate order.

As required by 10 CFR 2.714, a petition for leave to intervene shall set forth with particularity the interest of the petitioner in the proceeding, and how that interest may be affected by the results of the proceeding. The petition should specifically explain the reasons why intervention should be permitted with particular reference to the following factors: (1) The nature of the petitioner's right under the Act to be made party to the proceeding; (2) the nature and extent of the petitioner's property, financial, or other interest in the proceeding; and (3) the possible effect of any order which may be entered in the proceeding on the petitioner's interest. The petition should also identify the specific aspect(s) of the subject matter of the proceeding as to which petitioner wishes to intervene. Any person who has filed a petition for leave to intervene or who has been admitted as a party may amend the petition without requesting leave of the Board up to 15 days prior to the first prehearing conference scheduled in the proceeding, but such an amended petition must satisfy the specificity requirements described above.

Not later than 15 days prior to the first prehearing conference scheduled in the proceeding, a petitioner shall file a supplement to the petition to intervene which must include a list of the contentions which are sought to be litigated in the matter. Each contention must consist of a specific statement of the issue of law or fact to be raised or controverted. In addition, the petitioner shall provide a brief explanation of the bases of the contention and a concise statement of the alleged facts or expert opinion which support the contention and on which the petitioner intends to rely in proving the contention at the hearing. The petitioner must also provide references to those specific sources and documents of which the petitioner is aware and on which the petitioner intends to rely to establish those facts or expert opinion. Petitioner must provide sufficient information to show that a genuine dispute exists with the applicant on a material issue of law or fact. Contentions shall be limited to matters within the scope of the amendment under consideration. The contention must be one which, if proven, would entitle the petitioner to relief. A petitioner who fails to file such a supplement which satisfies these requirements with respect to at least one contention will not be permitted to participate as a party.

Those permitted to intervene become parties to the proceeding, subject to any limitations in the order granting leave to intervene, and have the opportunity to participate fully in the conduct of the hearing, including the opportunity to present evidence and cross-examine witnesses.

If a hearing is requested, the Commission will make a final determination on the issue of no significant hazards consideration. The final determination will serve to decide when the hearing is held.

If the final determination is that the amendment request involves no significant hazards consideration, the Commission may issue the amendment and make it immediately effective, notwithstanding the request for a hearing. Any hearing held would take place after issuance of the amendment.

If the final determination is that the amendment request involves a significant hazards consideration, any hearing held would take place before the issuance of any amendment.

A request for a hearing or a petition for leave to intervene must be filed with the Secretary of the Commission, U.S. Nuclear Regulatory Commission, Washington, DC 20555–0001, Attention: Rulemakings and Adjudications Staff, or may be delivered to the Commission's Public Document Room, the Gelman Building, 2120 L Street, NW., Washington, DC, by the above date. A copy of the petition should also be sent to the Office of the General Counsel, U.S. Nuclear Regulatory Commission, Washington, DC 20555–0001, and to David W. Jenkins, Esquire, One Cook Place, Bridgman, MI 49106, attorney for the licensee.

Nontimely filings of petitions for leave to intervene, amended petitions, supplemental petitions and/or requests for hearing will not be entertained absent a determination by the Commission, the presiding officer or the presiding Atomic Safety and Licensing Board that the petition and/or request should be granted based upon a balancing of the factors specified in 10 CFR 2.714(a)(1)(I)–(v) and 2.714(d).

For further details with respect to this action, see the application for amendment dated December 22, 1999, which is available for public inspection at the Commission's Public Document Room, the Gelman Building, 2120 L Street, NW., Washington, DC, and accessible electronically through the ADAMS Public Electronic Reading Room link at the NRC Web site (http://www.nrc.gov).

Dated at Rockville, Maryland, this 10th day of January 2000.

For the Nuclear Regulatory Commission.

John F. Stang, Sr.,

Project Manager, Section 1, Project Directorate III, Division of Licensing Project Management, Office of Nuclear Reactor Regulation.

[FR Doc. 00–812 Filed 1–12–00; 8:45 am]

BILLING CODE 7590–01–P

NUCLEAR REGULATORY COMMISSION

[Docket No. 72–2]

Virginia Electric and Power Company; Notice of Docketing of the Materials License SNM–2501 Amendment Application for the Surry Independent Spent Fuel Storage Installation

By letter dated November 15, 1999, Virginia Electric and Power Company (Virginia Power) submitted an application to the Nuclear Regulatory Commission (NRC or the Commission) in accordance with 10 CFR Part 72 requesting the amendment of the Surry Power Station independent spent fuel storage installation (ISFSI) license (SNM–2501) and the Technical Specifications for the ISFSI located in Surry County, Virginia. Virginia Power is seeking Commission approval to amend the materials license and ISFSI Technical Specifications to allow the use of the TN–32 dry storage cask to store spent fuel with a higher initial enrichment and burnup.

This application was docketed under 10 CFR Part 72; the ISFSI Docket No. is 72–2 and will remain the same for this action. The amendment of an ISFSI license is subject to the Commission's approval.

The Commission may issue either a notice of hearing or a notice of proposed action and opportunity for hearing in accordance with 10 CFR 72.46(b)(1) or, if a determination is made that the amendment does not present a genuine issue as to whether public health and safety will be significantly affected, take immediate action on the amendment in accordance with 10 CFR 72.46(b)(2) and provide notice of the action taken and an opportunity for interested persons to request a hearing on whether the action should be rescinded or modified.

For further details with respect to this application, see the application dated November 15, 1999, which is available for public inspection at the Commission's Public Document Room, 2120 L Street, NW, Washington, DC 20555.

Dated at Rockville, Maryland, this 27th day of December 1999.

For the U.S. Nuclear Regulatory Commission.

Susan F. Shankman,

Deputy Director, Licensing and Inspection Directorate, Spent Fuel Project Office, Office of Nuclear Material Safety and Safeguards.

[FR Doc. 00–803 Filed 1–12–00; 8:45 am]

BILLING CODE 7590–01–P

NUCLEAR REGULATORY COMMISSION

[Docket No. 50–346]

FirstEnergy Nuclear Operating Company; Davis-Besse Nuclear Power Station, Unit 1, Environmental Assessment and Finding of No Significant Impact

The U.S. Nuclear Regulatory Commission (the Commission) is considering issuance of an amendment to Facility Operating License NPF–3, issued to FirstEnergy Nuclear Operating Company (the licensee), for operation of the Davis-Besse Nuclear Power Station, Unit 1 (DBNPS), located in Ottawa County, Ohio.

Environmental Assessment

Identification of the Proposed Action

The proposed action will expand the present spent fuel storage capability by 289 storage locations by allowing the use of spent fuel racks in the cask pit area adjacent to the spent fuel pool (SFP). The cask pit is accessible from the SFP through a gated opening in the wall dividing the two pool areas. The modification will be achieved by two separate activities. In support of the twelfth refueling outage (12RFO), currently scheduled for April 2000, the licensee has installed two rack modules in the cask pit, containing a total of 153 storage locations. Later, during Cycle 13, the licensee plans to install two additional rack modules in the cask pit containing 136 additional storage locations. The licensee's long-term plans include submitting a request for a complete re-racking of the SFP. The four rack modules in the cask pit, which will be used to support shuffling of spent fuel during the re-racking, will be relocated into the SFP. The design of the new high density spent fuel storage racks incorporates Boral as a neutron absorber in the cell walls to allow for more dense storage of spent fuel.

The proposed action is in accordance with the licensee's application for amendment dated May 21, 1999, as supplemented by submittal dated December 1, 1999.

The Need for the Proposed Action

An increase in spent fuel storage capacity is needed to reestablish full core off-load capability. The licensee currently has insufficient storage capacity in the SFP to fully off-load the reactor core (177 fuel assemblies). The current spent fuel storage capacity in the SFP is 735 fuel assemblies and there are only 114 empty storage locations available. The licensee needs to conduct a full core off-load in order to perform reactor vessel Inservice Inspection activities during the twelfth refueling outage (12RFO) which is currently scheduled to begin in April 2000. The licensee's long-term plans include submitting a license amendment request to permit a complete re-racking of the SFP with higher density fuel storage racks.

Environmental Impacts of the Proposed Action

Radioactive Waste Treatment

DBNPS uses waste treatment systems designed to collect and process gaseous, liquid, and solid waste that might contain radioactive material. These radioactive waste treatment systems were evaluated in the Final Environmental Statement (FES) dated October 1975. The proposed SFP expansion will not involve any change in the waste treatment systems described in the FES.

Gaseous Radioactive Wastes

The storage of additional spent fuel assemblies in the SFP is not expected to affect the release of radioactive gases from the pool. Gaseous fission products such as Krypton-85 and Iodine-131 are produced by the fuel in the core during reactor operation. A small percentage of these fission gases is released to the reactor coolant from the small number of fuel assemblies that are expected to develop leaks during reactor operation. During refueling operations, some of these fission products enter the pool and are subsequently released into the air. Since the frequency of refueling (and therefore the number of freshly off-loaded spent fuel assemblies stored in the SFP at any one time) will not increase, there will be no increase in the amounts of these types of fission products released to the atmosphere as a result of the increased SFP storage capacity.

The increased heat load on the pool from the storage of additional spent fuel assemblies will potentially result in an increase in the pool's evaporation rate. However, this increased evaporation rate is not expected to result in an increase in the amount of gaseous tritium released from the pool. The overall release of radioactive gases from DBNPS will remain a small fraction of the limits of 10 CFR 20.1301.

Solid Radioactive Wastes

Spent resins are generated by the processing of SFP water through the pool's purification system. The spent fuel pool cooling and cleanup system at DBNPS currently generates

approximately 50 cubic feet of solid radioactive waste annually. The necessity for pool filtration resin replacement is determined primarily by the need for water clarity, and the resin is normally changed about once every 18 months. The additional number of fuel assemblies in storage is not expected to significantly affect the resin replacement frequency. Therefore, the staff does not expect that the additional fuel storage provided by the new rack modules will result in a significant change in the generation of solid radwaste at DBNPS.

Liquid Radioactive Waste

The release of radioactive liquids will not be affected directly as a result of the modifications. The SFP ion exchanger resins remove soluble radioactive materials from the SFP water. When the resins are changed out, the small amount of resin sluice water which is released is processed by the radwaste system. As stated above, the staff does not expect that the additional fuel storage provided by the new rack modules will result in a significant change in the generation of solid radwaste at DBNPS. The volume of SFP water processed for discharge is also not expected to be significantly changed. Therefore, the staff expects that the amount of radioactive liquid released to the environment as a result of the proposed SFP expansion will be negligible.

Occupational Dose Consideration

Radiation Protection personnel at DBNPS will constantly monitor the doses to the workers during the SFP expansion operation. Operating experience has shown that area radiation dose rates originate primarily from radionuclides in the pool water. During refueling and other fuel movement operations, pool water concentrations might be expected to increase slightly due to crud deposits spalling from fuel assemblies and due to activities carried into the pool from the primary system. Should dose rates above and around the cask pit perimeter increase, this change would be identified by routine surveillances. Where there is a potential for significant airborne activity, continuous air monitors will be in operation. Personnel will wear protective clothing as required and, if necessary, respiratory protective equipment. If it becomes necessary to utilize divers for the operation, the licensee will equip each diver with appropriate personal dosimetry. The total occupational dose to plant workers as a result of this SFP expansion is estimated to be between 1.85 and 4.0 person-rems. This dose estimate is comparable to doses for SFP re-racking modifications at other nuclear plants. The planned activities will follow detailed procedures prepared with full consideration of ALARA (as low as is reasonably achievable) principles.

On the basis of its review of the licensee's proposal, the staff concludes that the SFP expansion operation can be performed in a manner that will ensure that doses to workers will be maintained ALARA. The estimated dose of 1.85 to 4.0 person-rem to perform the modification is a small fraction of the annual collective dose accrued at DBNPS.

Accident Considerations

In its application, the licensee evaluated the possible consequences of a fuel handling accident to determine the thyroid and whole-body doses at the site's Exclusion Area Boundary, Low Population Zone, and in the DBNPS Control Room. The proposed cask pit storage racks will not affect any of the assumptions or inputs used in evaluating the dose consequences of a fuel handling accident and, therefore, will not result in an increase in the doses from a postulated fuel handling accident.

The licensee proposes to place restrictions on the spent fuel that will be stored in the cask pit racks. The restrictions stipulate that the spent fuel must have been removed from the reactor vessel for at least three years. The length of the decay period was determined by the licensee to address onsite ALARA and thermal-hydraulics considerations. The licensee will establish administrative controls to ensure the three year age limitation will not be violated.

The staff reviewed the licensee's analysis of a fuel handling accident and performed confirmatory calculations to check the acceptability of the licensee's doses. The staff's calculations confirmed that the offsite doses from a fuel handling accident meet the acceptance criteria and that the licensee's calculations are acceptable. The results of the staff's calculations are presented in the Safety Evaluation to be issued with the license amendment.

An accidental cask drop into the pool continues to be unlikely as none of the features preventing such a drop (e.g., design and maintenance of the main hoist, the controlled cask movement path, and the hydraulic guide cylinder cask drop protection system) are affected by the proposed action. The licensee also found that the consequences of a loss of SFP cooling were acceptable in that ample time would be available for the operators to reestablish cooling before the onset of pool boiling. Evaluation of a design basis seismic event indicated the new racks would remain safe and impact-free, the structural capability of the pool would not be exceeded, and the reactor building and crane structure would continue to retain necessary safety margins. Thus, these potential accidents have no environmental consequences.

The proposed action will not significantly increase the probability or consequences of accidents, no changes are being made in the types of any effluents that may be released offsite, and there is no significant increase in occupational or public radiation exposure. Therefore, there are no significant radiological environmental impacts associated with the proposed action.

With regard to potential nonradiological impacts, the proposed action does not involve any historic sites. It does not affect nonradiological plant effluents and has no other environmental impact. Therefore, there are no significant nonradiological environmental impacts associated with the proposed action.

Accordingly, the NRC concludes that there are no significant environmental impacts associated with the proposed action.

Alternatives to the Proposed Action

Shipping Fuel to a Permanent Federal Fuel Storage/Disposal Facility

Shipment of spent fuel to a high-level radioactive storage facility is an alternative to increasing the onsite spent fuel storage capacity. However, the U.S. Department of Energy's (DOE's) high-level radioactive waste repository is not expected to begin receiving spent fuel until approximately 2010, at the earliest. In October 1996, the Administration did commit DOE to begin storing waste at a centralized location by January 31, 1998. However, no location has been identified and an interim federal storage facility has yet to be identified in advance of a decision on a permanent repository. Therefore, shipping spent fuel to the DOE repository is not considered an alternative to increased onsite spent fuel storage capacity at this time.

Shipping Fuel to a Reprocessing Facility

Reprocessing of spent fuel from DBNPS is not a viable alternative since there are no operating commercial reprocessing facilities in the United States. Therefore, spent fuel would have to be shipped to an overseas facility for reprocessing. However, this approach

has never been used and it would require approval by the Department of State as well as other entities. Additionally, the cost of spent fuel reprocessing is not offset by the salvage value of the residual uranium; reprocessing represents an added cost.

Shipping Fuel to Another Utility or Site or to Another FirstEnergy Facility

The shipment of fuel to another utility or transferring DBNPS fuel to another FirstEnergy facility (i.e., Perry Nuclear Power Plant, Unit 1, or Beaver Valley Power Station, Units 1 & 2) for storage would provide short-term relief from the storage problem at DBNPS. The Nuclear Waste Policy Act of 1982 and 10 CFR Part 53, however, clearly place the responsibility for the interim storage of spent fuel with each owner or operator of a nuclear plant. The other FirstEnergy spent fuel pools have been designed with capacity to accommodate their own needs and, therefore, transferring spent fuel from DBNPS to another FirstEnergy pool would create fuel storage capacity problems for these other facilities. The shipment of fuel to another site or transferring it to another FirstEnergy facility is not an acceptable alternative because of increased fuel handling risks and additional occupational radiation exposure, as well as the fact that no additional storage capacity would be created.

Alternatives Creating Additional Storage Capacity

Alternative technologies that would create additional storage capacity include rod consolidation, dry cask storage, and constructing a new pool. Rod consolidation involves disassembling the spent fuel assemblies and storing the fuel rods from two or more assemblies into a stainless steel canister that can be stored in the spent fuel racks. Industry experience with rod consolidation is currently limited, primarily due to concerns for potential gap activity release due to rod breakage, the potential for increased fuel cladding corrosion due to some of the protective oxide layer being scraped off, and because the prolonged consolidation activity could interfere with ongoing plant operations.

Dry cask storage is a method of transferring spent fuel, after storage in the pool for several years, to high capacity casks with passive heat dissipation features. After loading, the casks are stored outdoors on a seismically qualified concrete pad. In the early 1990s, the licensee made the decision to reclaim some of the DBNPS SFP storage using a dry fuel storage system. In January 1996, 72 spent fuel assemblies were loaded into three Dry Shielded Canisters and were placed in dry fuel storage utilizing the certified Nutech Horizontal Modular Storage (NUHOMS) system, in accordance with 10 CFR 72.214, Certificate Number 1004. However, changes within the dry spent fuel storage industry have caused cost increases. In addition, the contracted supplier of the NUHOMS system voluntarily stopped fabrication activities and was unable to provide additional storage systems within an acceptable schedule. Further use of this technology was re-evaluated and determined not to be the best choice for future storage expansion at DBNPS. Based upon economics, schedule, and risk management, the licensee concluded that dry cask storage was not a viable alternative at DBNPS.

The alternative of constructing and licensing a new fuel pool is not practical because such an effort would require about 10 years to complete and would be the most expensive alternative.

The alternative technologies that could create additional storage capacity involve additional fuel handling with an attendant opportunity for a fuel handling accident, involve higher cumulative dose to workers effecting the fuel transfers, require additional security measures, are significantly more expensive, and would not result in a significant improvement in environmental impacts compared to the proposed re-racking modifications.

Reduction of Spent Fuel Generation

Generally, improved usage of the fuel or operation at a reduced power level would be an alternative that would decrease the amount of fuel being stored in the pool and thus, increase the amount of time before full core off-load capacity is lost. With extended burnup of fuel assemblies, the fuel cycle would be extended and fewer off-loads would be necessary. This is not an alternative for resolving the loss of full core off-load capability that will occur as a result of the DBNPS refueling outage scheduled to begin in April 2000, because the spent fuel to be transferred to the pool for storage has now almost completed its operating history in the core. DBNPS has been operating on the basis of 24-month refueling cycles, with core designs and fuel management schemes optimized accordingly. Operating the plant at a reduced power level would not make effective use of available resources, and would cause unnecessary economic hardship on the licensee and its customers. Therefore, reducing the amount of spent fuel generated by increasing burnup further or reducing power is not considered a practical alternative.

The No-Action Alternative

As an alternative to the proposed action, the staff considered denial of the proposed action (i.e., the ''no-action'' alternative). Denial of the application would result in no change in current environmental impacts. The environmental impacts of the proposed action and the alternative action are similar.

Alternative Use of Resources

This action does not involve the use of any resources not previously considered in the Final Environmental Statement for DBNPS.

Agencies and Persons Consulted

In accordance with its stated policy, on December 14, 1999, the staff consulted with the Ohio State official, Carol O'Claire, of the Ohio Emergency Management Agency, regarding the environmental impact of the proposed action. The State official had no comments.

Finding of No Significant Impact

On the basis of the environmental assessment, the NRC concludes that the proposed action will not have a significant effect on the quality of the human environment. Accordingly, the NRC has determined not to prepare an environmental impact statement for the proposed action.

For further details with respect to the proposed action, see the licensee's letter dated May 21, 1999, as supplemented by letter dated December 1, 1999, which are available for public inspection at the Commission's Public Document Room, The Gelman Building, 2120 L Street, NW., Washington, DC. Publicly available records will be accessible electronically from the ADAMS Public Library component on the NRC Web site, http://www.nrc.gov (the Electronic Reading Room).

Dated at Rockville, Maryland, this 7th day of January 2000.

For the Nuclear Regulatory Commission.

Anthony J. Mendiola,

Chief, Section 2, Project Directorate III, Division of Licensing Project Management, Office of Nuclear Reactor Regulation.

[FR Doc. 00–804 Filed 1–12–00; 8:45 am]

BILLING CODE 7590–01–P

NUCLEAR REGULATORY COMMISSION

Advisory Committee on Reactor Safeguards, Subcommittee Meeting on Planning and Procedures; Notice of Meeting

The ACRS Subcommittee on Planning and Procedures will hold a meeting on February 2, 2000, Room T–2B1, 11545 Rockville Pike, Rockville, Maryland.

The entire meeting will be open to public attendance, with the exception of a portion that may be closed pursuant to 5 U.S.C. 552b(c) (2) and (6) to discuss organizational and personnel matters that relate solely to internal personnel rules and practices of ACRS, and information the release of which would constitute a clearly unwarranted invasion of personal privacy.

The agenda for the subject meeting shall be as follows:

Wednesday, February 2, 2000—1:00 p.m. Until the Conclusion of Business

The Subcommittee will discuss proposed ACRS activities and related matters. The purpose of this meeting is to gather information, analyze relevant issues and facts, and to formulate proposed positions and actions, as appropriate, for deliberation by the full Committee.

Oral statements may be presented by members of the public with the concurrence of the Subcommittee Chairman; written statements will be accepted and made available to the Committee. Electronic recordings will be permitted only during those portions of the meeting that are open to the public, and questions may be asked only by members of the Subcommittee, its consultants, and staff. Persons desiring to make oral statements should notify the cognizant ACRS staff person named below five days prior to the meeting, if possible, so that appropriate arrangements can be made.

Further information regarding topics to be discussed, the scheduling of sessions open to the public, whether the meeting has been canceled or rescheduled, the Chairman's ruling on requests for the opportunity to present oral statements, and the time allotted therefor can be obtained by contacting the cognizant ACRS staff person, Dr. John T. Larkins (telephone: 301/415–7360) between 7:30 a.m. and 4:15 p.m. (EST). Persons planning to attend this meeting are urged to contact the above named individual one or two working days prior to the meeting to be advised of any changes in schedule, etc., that may have occurred.

Dated: January 6, 2000.

Howard J. Larson,

Acting Associate Director for Technical Support, ACRS/ACNW.

[FR Doc. 00–806 Filed 1–12–00; 8:45 am]

BILLING CODE 7590–01–P

NUCLEAR REGULATORY COMMISSION

Advisory Committee on Reactor Safeguards Meeting of the Subcommittee on Plant License Renewal; Notice of Meeting

The ACRS Subcommittee on Plant License Renewal will hold a meeting on February 24, 2000, at the Madren Conference Center at Clemson University, Room III & IV, 100 Madren Center Drive, Clemson, South Carolina.

The entire meeting will be open to public attendance.

The agenda for the subject meeting shall be as follows:

Thursday, February 24, 2000—8:00 a.m. until 1:00 p.m.

The Subcommittee will review the NRC staff's resolution of the open and confirmatory items identified in the June 1999 Safety Evaluation Report related to the license renewal of Oconee Nuclear Station Units 1, 2 and 3, and related license renewal activities. The purpose of this meeting is to gather information, analyze relevant issues and facts, and to formulate proposed positions and actions, as appropriate, for deliberation by the full Committee.

Oral statements may be presented by members of the public with the concurrence of the Subcommittee Chairman; written statements will be accepted and made available to the Committee. Electronic recordings will be permitted only during those portions of the meeting that are open to the public, and questions may be asked only by members of the Subcommittee, its consultants, and staff. Persons desiring to make oral statements should notify the cognizant ACRS staff engineer named below five days prior to the meeting, if possible, so that appropriate arrangements can be made.

During the initial portion of the meeting, the Subcommittee, along with any of its consultants who may be present, may exchange preliminary views regarding matters to be considered during the balance of the meeting.

The Subcommittee will then hear presentations by and hold discussions with representatives of the Duke Energy Corporation, the NRC staff, and other interested persons regarding this review.

Further information regarding topics to be discussed, whether the meeting has been canceled or rescheduled, and the Chairman's ruling on requests for the opportunity to present oral statements and the time allotted therefor, can be obtained by contacting the cognizant ACRS staff engineer, Mr. Noel F. Dudley (telephone 301/415–6888) between 7:30 a.m. and 4:15 p.m. (EST). Persons planning to attend this meeting are urged to contact the above named individual one or two working days prior to the meeting to be advised of any potential changes to the agenda, etc., that may have occurred.

Dated: January 6, 2000.

Howard J. Larson,

Acting Associate Director for Technical Support, ACRS/ACNW.

[FR Doc. 00–807 Filed 1–12–00; 8:45 am]

BILLING CODE 7590–01–P

SECURITIES AND EXCHANGE COMMISSION

[Form N–54A, SEC File No. 270–182, OMB Control No. 3235–0237, Form N–54C, SEC File No. 270–184, OMB Control No. 3235–0236, Form N–6F, SEC File No. 270–185, OMB Control No. 3235–0238]

Proposed Collection; Comment Request

Upon Written Request, Copy Available From: Securities and Exchange Commission, Office of Filings and Information Services, 450 Fifth Street, NW, Washington, DC 20549.

Notice is hereby given that, pursuant to the Paperwork Reduction Act of 1995 [44 U.S.C. 3501 *et seq.*] (the ''Act''), the Securities and Exchange Commission (the ''Commission'') is soliciting comments on the collections of information summarized below. The Commission plans to submit these existing collections of information to the Office of Management and Budget for extension and approval.

Form N–54A Under the Investment Company Act of 1940; Notification of Election To Be Subject to Sections 55 Through 65 of the Investment Company Act of 1940 Filed Pursuant to Section 54(a) of the Act

Form N–54A [17 CFR 274.53] is a notification of election to the Commission to be regulated as a business development company. A company making such an election only has to file a Form N–54A once.

It is estimated that approximately 3 respondents per year file with the Commission a Form N–54A. Form N–54A requires approximately 0.5 burden

hours per response resulting from creating and filing the information required by the form. The total burden hours for Form N–54A would be 1.5 hours per year in the aggregate. The estimated annual burden of 1.5 hours represents a decrease of 0.5 hours over the prior estimate of 2 hours. The decrease in burden hours is attributable to a decrease in the number of respondents from 4 to 3.

Form N–54C Under the Investment Company Act of 1940, Notification of Withdrawal of Election To Be Subject to Sections 55 Through 65 of the Investment Company Act of 1940 Filed Pursuant to Section 54(c) of the Investment Company Act of 1940

Form N–54C [17 CFR 274.54] is a notification to the Commission that a company withdraws its election to be regulated as a business development company. Such a company only has to file a Form N–54C once.

It is estimated that approximately 12 respondents per year file with the Commission a Form N–54C. Form N–54C requires approximately 1 burden hour per response resulting from creating and filing the information required by the form. The total burden hours for Form N–54C would be 12 hours per year in the aggregate. The estimated annual burden of 12 hours represents an increase of 11 hours over the prior estimate of 1 hour. The increase in burden hours is attributable to an increase in the number of respondents from 1 to 12.

Form N–6F Under the Investment Company Act of 1940, Notice of Intent to Elect To Be Subject to Sections 55 through 65 of the Investment Company Act of 1940

Certain companies may have to make a filing with the Commission before they are ready to elect on Form N–54A to be regulated as a business development company.[1] A company that is excluded from the definition of ''investment company'' by Section 3(c)(1) of the Investment Company Act of 1940 because it has fewer than one hundred shareholders and is not making a public offering of its securities may lose such an exclusion solely because it proposes to make a public offering of securities as a business development company. Such a company, under certain conditions, would not lose its exclusion if it notifies the Commission on Form N–6F [17 CFR 274.15] of its intent to make an election to be regulated as a business development company. The company only has to file a Form N–6F once.

It is estimated that approximately 3 respondents per year file with the Commission a Form N–6F. Form N–6F requires approximately 0.5 burden hours per response resulting from creating and filing the information required by the form. The total burden hours for Form N–6F would be 1.5 hours per year in the aggregate. The estimated annual burden of 1.5 hours represents a decrease of 0.5 hours over the prior estimate of 2 hours. The decrease in burden hours is attributable to a decrease in the number of respondents from 4 to 3.

The estimates of average burden hours for Forms N–54A, N54–C and N–64F are made solely for the purposes of the Act and are not derived from a comprehensive or even representative survey or study of the costs of Commission rules and forms.

Written comments are invited on: (a) whether the proposed collections of information are necessary for the proper performance of the functions of the agency, including whether the information will have practical utility; (b) the accuracy of the agency's estimate of the burden of the collections of information; (c) ways to enhance the quality, utility, and clarity of the information collected; and (d) ways to minimize the burden of the collections of information on respondents, including through the use of automated collection techniques or other forms of information technology. Consideration will be given to comments and suggestions submitted in writing within 60 days of this publication.

Please direct your written comments to Michael E. Bartell, Associate Executive Director, Office of Information Technology, Securities and Exchange Commission, 450 Fifth Street, NW, Washington, DC 20549.

Dated: January 6, 2000.

Margaret H. McFarland,

Deputy Secretary.

[FR Doc. 00–779 Filed 1–12–00; 8:45 am]

BILLING CODE 8010–01–M

[1] A company might not be prepared to elect to be subject to sections 55 through 65 of the Investment Company Act of 1940 because its capital structure or management compensation plan is not yet in compliance with the requirements of those sections.

SECURITIES AND EXCHANGE COMMISSION

[Release No. 34–42313; File No. SR–CHX–99–19]

Self-Regulatory Organizations; Notice of Filing and Immediate Effectiveness of Proposed Rule Change by the Chicago Stock Exchange Regarding Minimum Term of Equity-Linked Debt Securities

January 4, 2000.

Pursuant to Section 19(b)(1) of the Securities Exchange Act of 1934 (''Act''),[1] and Rule 19b–4 thereunder,[2] notice is hereby given that on September 24, 1999, the Chicago Stock Exchange, Inc. (''CHX'' or ''Exchange'') filed with the Securities and Exchange Commission (''Commission'') the proposed rule change. The Exchange submitted Amendment No. 1 to its proposal on October 19, 1999[3] and Amendment No. 2 on December 30, 1999.[4] The proposed rule change, as amended, is described in Items I, II, and III below, which Items have been prepared by the Exchange. The Exchange has designated the proposed rule change as constituting a ''non-controversial'' rule change under subparagraph (f)(6) of Rule 19b–4 under the Act[5] which renders the proposal effective upon receipt of this filing by the Commission.[6] The Commission is

[1] 15 U.S.C. 78s(b)(1).

[2] 17 CFR 240.19b–4.

[3] In Amendment No. 1 the Exchange requested accelerated approval of the proposed rule change pursuant to Section 19(b)(2) of the Act. Letter from Kathleen M. Boege, Associate General Counsel, Exchange, to Katherine A. England, Assistant Director, Division of Market Regulation (''Division''), Commission, dated October 19, 1999 (''Amendment No. 1'').

[4] In Amendment No. 2, the Exchange requested accelerated approval of the proposed rule change pursuant to Section 19(b)(3)(A)(i) of the Act and subparagraph (f)(6) of Rule 19b–4; confirmed that it has surveillance procedures in place to identify and deter manipulative trading activity of ELDS; and represented that it would notify the Commission in advance if the Exchange intended to list equity-linked debt securities of a non-U.S. company issuer and the issue has a term of more than three years. The Exchange also noted that the proposed rule change is identical to rule changes recently approved by the Commission for the New York Stock Exchange (''NYSE'') and the American Stock Exchange (''AMEX''). Finally, the Exchange clarified that the proposed rule not only reduces the minimum term of ELDS, but also eliminates the maximum term of ELDS. Letter from Kathleen M. Boege, Associate General Counsel, Exchange, to Katherine A. England, Division, Commission, dated December 30, 1999 (''Amendment No. 2''). Because Amendment No. 2 is substantive, the Commission will consider the date Amendment No. 2 was filed on the filing date for the proposed rule change under Section 19(b)(3)(A) of the Act.

[5] 17 CFR 240.19b–4(f)(6).

[6] As required by 17 CFR 240.19b–4(f)(6), the Exchange has represented that the proposed rule

Continued

publishing this notice to solicit comments on the proposed rule change from interested persons.

I. Self-Regulatory Organization's Statement of the Terms of Substance of the Proposed Rule Change

The Exchange proposes to amend Article XXVIII, Rule 26 of the Exchange's rules to reduce the minimum term of equity-linked debt securities (''ELDS''), whether based on a domestic or foreign issuer, to one year, and eliminate the maximum term of an ELDS. The text of the proposed rule change is available at the Exchange and at the Commission.

II. Self-Regulatory Organization's Statement of the Purpose of, and Statutory Basis for, the Proposed Rule Change

In its filing with the Commission, the Exchange included statement concerning the purpose of and basis for the proposed rule change and discussed any comments it received on the proposed rule change. The text of these statements may be examined at the places specified in Item IV below. The Exchange has prepared summaries, set forth in Sections A,B, and C below, of the most significant aspects of such statements.

A. Self-Regulatory Organization's Statement of the Purpose of, and Statutory Basis for, the Proposed Rule Change

1. Purpose

On November 30, 1998, the Commission approved listing standards for ELDS trading on the Exchange.[7] ELDS are non-convertible debt of an issuer, the value of which is based, at least in part, on the value of another issuer's common stock or non-convertible preferred stock. Article XXVIII, Rule 26 of the Exchange's rules details the listing standards for ELDS. Among other requirements, these standards currently require that ELDS have a term of two to seven years, but no more than three years, if the issuer is a non-U.S. company. The Exchange initially adopted this term minimum (which is substantially longer than the one-year minimum generally established for other derivative securities) as a conservative measure to help ensure that the trading of ELDS did not have an adverse effect on the liquidity of the underlying stock and were not used in a manipulative manner.[8]

Since the Exchange began listing ELDS for trading, the possible adverse effects set forth above not manifested themselves. In fact, the Exchange believes that ELDS complement the trading of the underlying stocks and the continued popularity of ELDS amply demonstrates their appeal in the market. The Exchange has in place surveillance procedures covering ELDS and the securities linked to ELDS for the purposes of identifying and deterring manipulative trading activity, and the Exchange has represented that it will notify the Commission in advance if the Exchange intends to list equity-linked debt securities of a non-U.S. company issuer and the issue has a term of more than three years.[9] Finally, the Exchange notes that the Commission recently approved rules for both the NYSE and AMEX that reduces the minimum term for their equity-linked debt instruments to one year.[10] Accordingly, the Exchange believes that it is appropriate to relax the more stringent term requirements set forth in Article XXVIII, Rule 26 of the Exchange's rules by reducing the minimum ELDS term to one year and eliminating the maximum term limit of ELDS.

2. Statutory Basis

The Exchange represents that the proposed rule change is consistent with Section 6(b)[11] of the Act in general and furthers the objectives of Section 6(b)(5)[12] in particular in that, by reducing the minimum term of ELDS, impediments to the mechanism of a free and open market and a national market system will be removed, and investors and the public interest will be protected.[13]

B. Self-Regulatory Organization's Statement on Burden on Competition

The Exchange does not believe that the proposed rule change will impose any burden on competition that is not necessary or appropriate in furtherance of the purposes of the Act.

C. Self-Regulatory Organization's Statement on Comments on the Proposed Rule Change Received from Members, Participants, or Others

The Exchange has neither solicited nor received written comments on the proposed rule change.

III. Date of Effectiveness of the Proposed Rule Change and Timing for Commission Action

This proposed rule filing has been filed by the Exchange as a ''non-controversial'' rule change pursuant to Section 19(b)(3)(A)(i) of the Act[14] and subparagraph (f)(6) of Rule 19b–4 thereunder.[15] The foregoing proposed rule change does not significantly affect the protection of investors or the public interest, nor does it impose any significant burden on competition. The Exchange also provided the Commission with written notice of its intent to file the proposed rule change at least five days prior to the filing date, as statutorily required.

Pursuant to subparagraph (f)(6) of Rule 19b–4,[16] the Commission has the authority to shorten the time period for the effectiveness of a rule ''if consistent with the protection of investors and the public interest.'' In this case, shortening the time period for effectiveness from 30 days after the date of filing[17] to immediate effectiveness is consistent with the protection of investors and the public interest because approval of this proposed rule conforms the listing criteria for equity-linked debt instruments among the Exchange, AMEX, and the NYSE.

At any time within 60 days of the filing of the proposed rule change, the Commission may summarily abrogate such rule change if it appears to the Commission that such action is necessary or appropriate in the public interest, for the protection of investors,

change will not significantly affect the protection of investors or the public interest, nor will it impose any significant burden on competition. The Exchange also fulfilled its obligation to provide at least five business days notice to the Commission of its intent to file this proposed rule change because this proposal was initially filed on September 24, 1999. Therefore, the Commission finds that it is consistent with the protection of investors and the public interest to grant immediate effectiveness to this proposed rule change. Further, given the similarity of this rule filing to rules amending the minimum term of equity-linked debt securities recently approved by the Commission for the NYSE and the AMEX, the Commission is exercising its authority under 17 CFR 240.19b–4(f)(6) to declare this rule immediately effective.

[7] Securities Exchange Act Release No. 40730 (November 30, 1998), 63 FR 67958 (December 9, 1998).

[8] The AMEX and the NYSE initially adopted similar term limits for equity-linked debt securities listed on their exchanges. Securities Exchange Act Release No. 32343 (May 20, 1993), 58 FR 30833 (May 27, 1993)(File No. SR–AMEX–92–42) for the AMEX; Securities Exchange Act Release No. 33468 (January 13, 1994), 59 FR 3387 (January 21, 1994)(File No. SR–NYSE–93–39) for the NYSE.

[9] Amendment No. 2, *supra* note 4.

[10] Securities Exchange Act Release No. 41992 (October 7, 1999). 64 FR 56007 (October 15, 1999)(No. SR–NYSE–99–22) for the NYSE; Securities Exchange Act Release No. 42110 (November 5, 1999), 64 FR 61677 (November 11, 1999) (File No. SR–AMEX–99–33) for the AMEX.

[11] 15 U.S.C. 78f(b).

[12] 15 U.S.C. 78f(b)(5).

[13] In reviewing this proposal, the Commission has considered its impact on efficiency competition, and capital formation. 15 U.S.C. 78c(f).

[14] 15 U.S.C. 78s(b)(3)(A)(i).

[15] 17 CFR. 240.19b–(f)(6).

[16] *Id.*

[17] *Id.*

or otherwise in furtherance of the purposes of the Act.

IV. Solicitation of Comments

Interested persons are invited to submit written data, views, and arguments concerning the foregoing, including whether the proposed rule change is consistent with the Act. Persons making written submissions should file copies thereof with the Secretary, Securities and Exchange Commission, 450 Fifth Street, NW, Washington, DC 20549–0609. Copies of the submission, all subsequent amendments, all written statements with respect to the proposed rule change that are filed with the Commission, and all written communications relating to the proposed rule change between the Commission and any person, other than those that may be withheld from the public in accordance with the provisions of 5 U.S.C. 552, will be available for inspection and copying at the Commission's Public Reference Room. Copies of such filing also will be available for inspection and copying at the principal office of the Chicago Stock Exchange, Incorporated. All submissions should refer to File No. SR–CHX–99–19 and should be submitted by February 3, 2000.

For the Commission, by the Division of Market Regulation, pursuant to delegated authority.[18]

Margaret H. McFarland,

Deputy Secretary.

[FR Doc. 00–781 Filed 1–12–00; 8:45 am]

BILLING CODE 8010–01–M

[18] 17 CFR 200.30–3(a)(12).

SECURITIES AND EXCHANGE COMMISSION

[Release No. 34–42310; File No. SR–NASD–99–6]

Self-Regulatory Organizations; Notice of Filing of Proposed Rule Change by National Association of Securities Dealers, Inc. Relating to the Implementation of Mandatory Trade Reporting for PORTAL Securities

January 3, 2000.

Pursuant to Section 19(b)(1) of the Securities Exchange Act of 1934 (''Act''),[1] and Rule 19b–4 thereunder,[2] notice is hereby given that on October 28, 1999,[3] the National Association of Securities Dealers, Inc. (''NASD'' or ''Association'') filed with the Securities and Exchange Commission (''SEC'' or ''Commission'') a proposed rule change as described in Items I, II, and III below, which Items have been prepared primarily by the NASD. The Commission is publishing this notice to solicit comments on the proposed rule change from interested persons.

I. Self-Regulatory Organization's Statement of the Terms of Substance of the Proposed Rule Change

The NASD is proposing to amend the rules of The PORTAL Market in the Rule 5300 Series to implement reporting of transactions in certain PORTAL securities. Below is the text of the proposed rule change. Proposed new language is in italics; proposed deletions are in brackets.

* * * * *

5300. THE PORTAL MARKET

5310. Definitions

For purposes of the PORTAL Market Rules, unless the context requires otherwise:

(a) ''Association'' means the National Association of Securities Dealers, Inc. (Association) or its wholly-owned subsidiary, The Nasdaq Stock Market, Inc., as determined by the Association.

(b) ''Exchange Act'' or ''Act'' means the Securities Exchange Act of 1934, as amended from time to time.

[(c) ''Execution'' means entering into a purchase, sale or transfer of a PORTAL security.]

[(d)] *(c)* ''PORTAL'' or ''PORTAL Market'' means the Association's market for designated foreign and domestic securities [through an automated quotation and communications system that facilitates private offerings, resales, trading, clearance and settlement by PORTAL participants] *that are eligible for resale under SEC Rule 144A.*

[(e) ''PORTAL account instruction system'' means one or more communications systems designated by the Association to transfer information concerning PORTAL account activities between a PORTAL qualified investor, its agent providing it access to the PORTAL depository system, PORTAL dealers and PORTAL brokers].

[(f) ''PORTAL broker'' means any member of the Association that is currently registered as a PORTAL broker in the PORTAL Market pursuant to Rule 5339.]

[(g) ''PORTAL clearing organization'' means a clearing organization that is part of the PORTAL clearing system and is designated by the Association to perform clearance and settlement functions with respect to PORTAL securities.]

[(h) ''PORTAL clearing system'' means the system consisting of one or more organizations designated by the Association to perform clearance and settlement functions with respect to PORTAL securities.]

[(i) ''PORTAL dealer'' means any member of the Association that is currently registered as a PORTAL dealer in the PORTAL Market pursuant to Rule 5338 of the PORTAL Rules, and is thereby also registered as a PORTAL qualified investor.]

[j) ''PORTAL depository organization'' means a depository organization that is part of the PORTAL depository system and is designated by the Association to perform the functions of a securities depository with respect to PORTAL securities.]

[(k) ''PORTAL depository system'' means the system consisting of one or more organizations designated by the Association to perform the functions of a securities depository with respect to PORTAL securities.]

((l) ''PORTAL Market information'' means quotation, transaction and other data and information displayed in the PORTAL Market that is accessed directly through the PORTAL Market system or indirectly through a third-party distributor of PORTAL Market information.]

(d) ''PORTAL equity security'' means a PORTAL security that represents an ownership interest in a legal entity, including but not limited to any common, capital, ordinary, preferred stock, or warrant for any of the foregoing, shares of beneficial interest, or the equivalent thereof (regardless of whether voting or non-voting, convertible or non-convertible, exchangeable or non-exchangeable, exerciseable or non-exerciseable, callable or non-callable, redeemable or non-redeemable).

(e) ''PORTAL debt security'' means a fixed income corporate bond issued by a U.S. company that is not rated or is rated BB+ or lower by a nationally recognized statistical rating organization, but shall not include convertible debt instruments, medium term notes, sovereign debt, Yankee bonds, municipal and municipal-derivative securities, or asset-backed instruments.

[(m)] *(f)* ''PORTAL Market system'' or ''PORTAL system'' means [the PORTAL Market] *any* computer system(*s*) [used]

[1] 15 U.S.C. 78s(b)(1).

[2] 17 CFR 240.19b–4.

[3] On December 30, 1999, the NASD submitted Amendment No. 1 clarifying when transactions are exempt from reporting requirements under the proposed ACT and TRACE rules, among other things. *See* Letter from Suzanne E. Rothwell, Chief Counsel, Corporate Financing, NASD Regulation, Inc., to Katherine A. England, Assistant Director, Division of Market Regulation, SEC, dated December 29, 1999. The substance of the amendment has been incorporated into this notice.

designated by the Association to *accept trade reports on transactions in PORTAL equity and/or debt securities, or to* display *transaction,* quotation, [and] *or* other [data and] information on [designated] PORTAL securities.

[(n) ''PORTAL non-participant report''means a report submitted by a member of the Association that is a PORTAL dealer or a PORTAL broker to the Market Regulation Department of the Association on a monthly basis that includes the information required Rule 5335.]

[(o) ''PORTAL participant'' means a PORTAL dealer, a PORTAL broker and a PORTAL qualified investor.]

[(p) ''PORTAL qualified investor'' means any investor that is currently registered as a PORTAL qualified investor in the PORTAL Market pursuant to the Rule 5350 Series.]

[(q)] *(g)* ''PORTAL Rules'' or ''PORTAL Market Rules'' means the PORTAL Market rules as included in the Rule [5000] *5300* Series.

[(r)] *(h)* ''PORTAL security'' means a security that is currently designated by the Association for inclusion in the PORTAL Market pursuant to the Rule 5320 Series.

[(s) ''PORTAL surveillance report'' means a report submitted by a PORTAL dealer or PORTAL broker to the Market Regulation Department of the Association on a monthly basis that includes the information required by Rule 5336.]

[(t)] *(i)* ''PORTAL transaction report'' means a report *of a transaction in a PORTAL security* submitted by a [PORTAL dealer or PORTAL broker] *member* through [the] *a designated* PORTAL Market system [within 15 minutes after execution of the transaction that includes the information required by Rule 5334].

[(u) *(j)* ''Restricted security'' means a security that meets the definition of that term contained in SEC Rule 144(a)(3) under the Securities Act. A PORTAL security continues to be a restricted security even though it is eligible to be resold pursuant to the provisions of SEC Rule 144, including SEC Rule 144(k), but has not been so resold.

[(v)] *(k)* ''SEC'' means the United States Securities and Exchange Commission.

[(w)] *(l)* ''SEC Rule 144A'' means SEC Rule 144A adopted under the Securities Act, as amended from time to time.

[(x)] *(m)* ''Securities Act'' means the Securities Act of 1933, as amended from time to time.

[(y) ''Short Sale'' means any sale of a security that meets the definition of that term contained in SEC Rule 3b–3 adopted under the Exchange Act.]

(n) ''Time of execution'' means the time when all of the terms of a transaction in a PORTAL security have been agreed to that are sufficient to calculate the dollar price of the transaction and a determination has been made that the transaction is in compliance with Rule 144A or any other applicable exemption from registration under Section 5 of the Securities Act.

[(z] *(o)* ''Transaction'' or ''trade'' means the purchase or sale of a PORTAL security.

[(aa)] *(p)* ''United States'' or ''U.S.'' means the United States of America (including the States and the District of Columbia), its territories, its possessions and other areas subject to its jurisdiction.

5320. Requirements Applicable to PORTAL Securities

5321. Application for Designation

(a) Application for designation as a PORTAL security shall be in the form required by the Association and shall be filed by [a PORTAL participant] *the issuer or any member of the Association.* Applications may be made with or without the concurrence of the issuer. The application shall demonstrate to the satisfaction of the Association that the security meets or exceeds the qualification requirements set forth in Rule 5322 *and provides the undertakings required by subparagraph (c) hereof.*

(b) Designation of a security as a PORTAL security shall be declared effective within a reasonable time after determination of qualification. The effective date of designation as a PORTAL security shall be determined by the Association giving due regard to the requirements of the PORTAL Market.

(c) An applicant that submits an application for designation of a security as a PORTAL security (or the issuer of the security, if the applicant is a member) under subparagraph (a) above shall undertake to promptly advise the Association:

(1) That the issuer has submitted to the SEC a registration statement to register the resale of the PORTAL security, securities to be exchanged for the PORTAL security, or securities into which the PORTAL security is exchangeable or convertible;

(2) of the effective date of a registration statement submitted to the SEC with respect to a PORTAL security, as described in subparagraph (1) hereof; and

(3) of the assignment of any CUSIP or CINS security identification to the PORTAL security or any tranch of a PORTAL security issue.

5322. Qualification Requirements for PORTAL Securities

(a) To qualify for initial designation and continued designation in the PORTAL Market, a security shall:

(1) be:

(A) a restricted security, as defined in SEC Rule 144(a)(3) under the Securities Act; or

(B) a security that upon issuance and continually thereafter only can be sold pursuant to Regulation S under the Securities Act, SEC Rule 144A, or SEC Rule 144 under the Securities Act, or in a transaction exempt from the registration requirements of the Securities Act pursuant to Section 4 thereof and not involving any public offering; provided, however, that if the security is a depositary receipt, the underlying security shall also be a security that meets the criteria set forth in subparagraphs (A) or (B) hereof;

(2) be eligible to be sold pursuant to SEC Rule 144A under the Securities Act;

(3) be in negotiable form, *be a depository eligible security as defined in paragraph (d) of Rule 11310,* and not subject to any restriction, condition or requirement that would impose an unreasonable burden on any [PORTAL participant] *member;*

(4) be assigned a CUSIP or CINS security identification number that is different from any identification number assigned to any unrestricted securities of the same class which do not satisfy paragraph (a)(1)(B) [; or, if issued in physical certificate form to investors, have a legend placed on each certificate stating that the securities have not been registered under the Securities Act and cannot be resold without registration under the Securities Act or an exemption therefrom]; and

(5) satisfy such additional criteria or requirements as the Association may prescribe.

(b) Notwithstanding the provisions of paragraph (a)(1)(B) of this Rule, if a PORTAL security is sold pursuant to the provisions of Rule 144, including Rule 144(k), it will thereby cease being a PORTAL security and it must be assigned a CUSIP or CINS security identification number that is different from the identification number assigned to a PORTAL security of the same class.

5323. Suspension or Termination of a PORTAL Security Designation

(a) The Association may, in its discretion, suspend or terminate designation as a PORTAL security if it determines that:

(1) the security is not in compliance with the requirements of the PORTAL Rules;

(2) a holder or prospective purchaser that requested issuer information pursuant to SEC Rule 144A(d)(4) did not receive the information;

(3) any application or other document relative to such securities submitted to the Association contained an untrue statement of a material fact or omitted to state a material fact necessary to make the statements therein not misleading; or

(4) failure to withdraw designation of such securities would for any reason be detrimental to the interests and welfare of [PORTAL participants] *members* or the Association.

(b) The Association will promptly notify [PORTAL participants] *members* of the suspension or termination of a security's designation as a PORTAL security *through the designated PORTAL Market system through which the security is reported.* [Such notification may be made through the facilities of the PORTAL Market.] Suspension or termination shall become effective in accordance with the terms of notice by the Association. The Association also will promptly notify The Depository Trust Company of the suspension or termination.

(c) Notwithstanding the suspension or termination of designation of a security as a PORTAL security, such security shall remain subject to all rules of the Association applicable to the PORTAL Market until the security is sold in accordance with the terms of notice by the Association of the suspension or termination.

5324. Review of Denial, Suspension or Termination of a PORTAL Security

A determination by the Association to deny, suspend or terminate the designation of a PORTAL security may be reviewed upon application by the aggrieved person pursuant to the provisions of the Rule 4800 Series.

[5324.] *5325.* PORTAL Entry Fees

When [a PORTAL participant] *an issuer or member* submits an application for designation of any class of securities as a PORTAL security, it shall pay to the Association a filing fee of $2,000.00 for an application covering a security or group of identifiable securities issuable as part of a single private placement covered by the same offering documents, plus $200.00 per assigned security symbol that is in addition to the first symbol assigned.

5330. Requirements Applicable to Members of the Association

5331. Limitations of Transactions in PORTAL Securities

(a) No member shall sell a PORTAL security unless:

(1) the sale is to:

(A) an investor or member that the member reasonably believes is a ''qualified institutional buyer'' in a transaction exempt from registration under the Securities Act by reason of compliance with Rule 144A;

(B) an investor or member in a transaction that is exempt from registration under the Securities Act by reason of compliance with an applicable exemption under the Securities Act other than 144A; or

(C) a member acting as an agent in a transaction that the member acting as an agent determines is in compliance with subparagraphs (A) or (B) hereof, and the selling member determines is exempt from registration under the Securities Act by reason of compliance with SEC Rule 144A or an applicable exemption under the Securities Act other than SEC Rule 144A; and (2) the member maintains in its files information demonstrating that the transaction is in compliance with Rule 144A or with any other applicable exemption from registration under the Securities Act.

5332. Reporting Debt and Equity Transactions in PORTAL Securities

[(a) A transaction in a PORTAL security in which a PORTAL dealer or PORTAL broker participates shall be reported to the PORTAL Market system in a PORTAL transaction report complying with Rule 5534 by:]

[(1) the seller, if each party in the transaction is either a PORTAL dealer or PORTAL borker;]

[(2) the PORTAL dealer or PORTAL broker participating in the transaction, if only one party in the transaction is a PORTAL dealer or PORTAL broker provided, however, that with respect to transactions that are part of the initial offering by or on behalf of the issuer or an affiliate thereof, a PORTAL dealer or PORTAL broker may comply with its obligation to submit a PORTAL transaction report by submitting, instead, a PORTAL surveillance report which reports such transaction to the Market Regulation Department of the Association as set forth in Rule 5336.]

[(b) A transaction in a PORTAL security in which a member participates, but in which no PORTAL dealer or PORTAL broker participates, shall be reported to the Market Regulation Department of the Association in a PORTAL non-participate report complying with Rule 5335 by:]

[(1) the seller, if each party in the transaction is a member; or]

[(2) the member, if only one party in the transaction is a member.]

[(c) The member responsible for submitting a PORTAL transaction report shall also submit to the Market Regulation Department of the Association a PORTAL surveillance report as set forth in Rule 5336.]

*(a) Transactions in a PORTAL equity security shall be reported to the Automated Confirmation Transaction System (''ACT'') in accordance with this Rule, except for transactions meeting the requirements of subparagraphs (e)(1)–(4) of Rule 6230.** Each PORTAL transaction report on a PORTAL equity security shall:

(1) include the information required by paragraph (d) of Rule 6130, including the time of execution;

(2) be submitted to ACT no later than 6:30 p.m. Eastern Time (or the end of the ACT reporting session that is in effect at that time); and

(3) be submitted by the party as required by paragraph (c) of Rule 6130.

(b) Transactions in PORTAL debt securities shall be reported to the Trade Reporting And Comparison Entry Service (''TRACE'') in accordance with the Rule 6200 Series.

([d]*c*) The reporting requirements of this Rule shall apply to [any transaction in a PORTAL security, including] transactions in reliance of SEC Rule 144 and sales to or purchases from a non-U.S. securities market.

(d) Members that submit PORTAL transaction reports shall be subject to any fees imposed by the particular PORTAL Market system through which the PORTAL transaction report is submitted, as set forth in the Rule 7000 Series.

5333. *Quotations in PORTAL Securities*

Members shall not enter a quotation with respect to any PORTAL security in a PORTAL Market system, electronic communication network (as defined in SEC Rule 11Ac-1-(a)(8)), or other interdealer quotation system.

[PORTAL Settlement]

[(a) Transactions in the PORTAL Market where the PORTAL dealer or PORTAL broker that enters the PORTAL transaction report in the PORTAL

* Until the Trade Reporting And Comparison Entry Service Rules are approved by the SEC and made effective, members that are obligated to report secondary market transactions in PORTAL equity securities through ACT can rely on the exceptions from reporting in Rule 6240(c) of the Fixed Income Pricing Service Rules.

Market system designates settlement in the PORTAL clearance and depository systems will settle five (5) business days after the date of the execution of the transaction, except as otherwise agreed between the PORTAL participants, in any currency accepted by the PORTAL depository organization.]

[(b) PORTAL securities and funds will be transferred on the books of the PORTAL depository system upon receipt from the PORTAL clearing system of the necessary settlement instructions designating settlement in the PORTAL clearance and depository systems from the PORTAL transaction report entered in the PORTAL Market system by the appropriate PORTAL dealer or PORTAL broker and subject to the purchaser meeting the requirements of the relevant PORTAL depository organization concerning deposit and availability of funds in accordance with the depository organization's procedures.]

[(c) PORTAL dealers and PORTAL brokers that settle a PORTAL transaction outside the PORTAL clearance and depository systems responsibility for the prompt settlement of the transaction in accordance with the protocols of the settlement methods used and the transaction will not be compared in the PORTAL Market.]

5334. PORTAL Transaction Reports-to-5390. Miscellaneous—Deleted

[5391.] *5340.* Arbitration

The facilities of the Association's Arbitration Department, and the procedures of the Code of Arbitration Procedure shall be available to [PORTAL participants] *members* to resolve disputes arising from PORTAL transactions and transfers or activities related thereto.

5392. Rules of the Association—Deleted

* * * * *

II. Self-Regulatory Organization's Statement of the Purpose of, and Statutory Basis for, the Proposed Rule Change

In its filing with the Commission, the NASD included statements concerning the purpose of and basis for the proposed rule change and discussed any comments it received on the proposed rule change. The text of these statements may be examined at the places specified in Item IV below. The NASD had prepared summaries, set forth in Sections A, B, and below, of the most significant aspects of such statements.[4]

A. Self-Regulatory Organization's Statement of the Purpose of, and Statutory Basis for, the Proposed Rule Change

Purpose

1. Introduction

The Nasdaq Stock Market, Inc. (''Nasdaq'') operates The PORTAL Market for securities that were sold in private placements and are eligible for resale under SEC Rule 144A adopted under the Securities Act of 1933[5] (''Securities Act''). The NASD created The PORTAL Market in 1990,[6] simultaneously with the SEC's adoption of rule 144A,[7] for the purposes of quotation, trading, and trade reporting in securities deemed eligible by the NASD for resale under Rule 144A. SEC Rule 144A provides an exemption from SEC registration for resales by investors of privately placed securities to qualified institutional buyers (''QIBS''), *i.e.,* institutional investors with at least $100 million invested in securities.

PORTAL designation is required for all Rule 144A security issues, except investment grade rated debt,[8] for the security to receive a CUSIP number and the book-entry services of The Depository Trust Company (''DTC''). An issuer of an investment grade rated debt issue can apply directly to DTC for book-entry services under DTC rules (''Rule 144A investment grade rated debt issues'').

The market-related activities of The PORTAL (market (*i.e.,* quotations, trade reporting, and trade dissemination) have not developed, even though the PORTAL Rules include requirements that would regulate all of these activities. In particular, the PORTAL Rules require trade reporting for all transactions in PORTAL securities within 15 minutes of execution. However, these reporting requirements have never been implemented because of technological problems and costs associated with submitting trade reports through the PORTAL Market computer system, which was a stand-alone computer system. Currently, the NASD's only function with regard to The PORTAL Market is reviewing whether an issue of privately placed securities meets the eligibility requirements of SEC Rule 144A.

In 1998, the NASD modified its definition of the term ''ACT Eligible Security'' in Rule 6110(a) of the NASD Rules for ACT to include an interpretation.[9] Under the new interpretation and pursuant to the Rule 5320 Series of the PORTAL rules, any PORTAL security voluntarily submitted to ACT for reconciliation, comparison, and/or clearance and settlement would be considered an ''ACT Eligible Security.'' In addition, the Association submitted a letter to the Commission advising it that Nasdaq proposed to eliminate the Stratus computer system that supports The PORTAL Market.[10]

2. Summary of Proposed Amendments

The NASD proposes to amend the rules governing The PORTAL Market (''PORTAL Rules'') in the Rule 5300 Series to require that NASD members submit trade reports of secondary market transactions[11] in PORTAL-designated U.S. high-yield debt securities through the Trade Reporting And Comparison Entry Service (''TRACE'') and in PORTAL equity securities through the Automated Confirmation Transaction Service (''ACT'').[12] ACT is a system, operated by Nasdaq, that accommodates the reporting and dissemination of last sale reports for secondary market transactions in equity securities (including preferred stock issues), and provides automated comparison and

[4] The Commission has modified the text of the summaries prepared by the NASD.

[5] 15 U.S.C. 77(a).

[6] Securities Exchange Act Release No. 27956 (April 27, 1990), 55 FR 18781 (May 4, 1990). The PORTAL Rules were subsequently amended by Securities Exchange Act Release No. 33326 (December 13, 1993), 58 FR 66388 (December 20, 1993) and Securities Exchange Act Release No. 37317 (June 17, 1996), 61 FR 33156 (June 26, 1996).

[7] Securities Act Release No. 6862 (April 23, 1990), 55 FR 17933 (April 30, 1990).

[8] Investment grade rated debt is a debt security rated by a nationally recognized statistical rating organization in one of its four highest rating categories.

[9] *See* Securities Exchange Act Release No. 40424 (Sept. 10, 1998), 63 FR 49623 (Sept. 16, 1998).

[10] *See* letter from Robert E. Aber, Senior Vice President and General Counsel, The Nasdaq Stock Market to Belinda Blaine and David A. Sirignano Divisions of Market Regulation and Corporate Finance, SEC, dated November 16, 1998.

[11] *See* discussion *infra.* The exception from reporting for a ''primary distribution by an issuer'' in proposed Rule 6230(e)(1) and (2) is proposed to include the resale under Rule 144A to the first QIB by a broker/dealer that has purchased the security from the issuer under Section 4(2) of the Securities Act if the broker/dealer is acting only as an intermediary. Thus, the first secondary market transaction in a PORTAL security that would be reportable would be a resale by an investor that has purchased directly from the issuer (where a broker/dealer has only acted as an agent) or a resale by a QIB that has purchased from a broker/dealer that has purchased the securities from the issuer under Section 4(2) of the Securities Act.

[12] It is anticipated that, at any one time, there will be approximately 900 PORTAL equity securities and approximately 2,000 PORTAL U.S. high-yield debt securities subject to trade reporting as a result of this proposal. As restricted PORTAL securities are eligible for resale into the public markets, either through Rule 144 or through registration, they will cease to be treated as PORTAL securities but will become subject to any applicable reporting obligations for publicly-traded securities.

confirmation services and forwards confirmed trades to DTC for settlement.

TRACE is a proposed new service to be operated by Nasdaq to provide services similar to those of ACT for secondary market transactions in certain SEC registered debt and Rule 144A investment grade rated debt issues that are eligible for book-entry services at DTC. The NASD's proposal to establish TRACE to implement trade reporting and transparency for secondary market transactions in such debt issues has been submitted to the SEC simultaneously with this proposed rule change to File No. SR–NASD–99–65.[13]

Only reporting obligations will be imposed with respect to secondary market transactions in PORTAL equity securities reported through ACT. However, members may also use the system's automated services for comparison, confirmation, and the forwarding of confirmed trades to DTC for settlement if they choose. Secondary market transactions in PORTAL U.S. high yield debt securities that are reported to TRACE will be subject to the mandatory confirmation of transactions as proposed in File No. SR–NASD–99–65. There will be no public dissemination of information in trade reports submitted to the Association with respect to PORTAL securities and depository-eligible Rule 144A investment grade rated debt issues.

The use of TRACE and ACT for the trade reporting of secondary market transactions in PORTAL securities will address the technological and cost problems that were associated with the reporting of such trades through the stand-alone PORTAL computer system, which is no longer operational.

The NASD proposes to amend the Definitions section contained in Rule 5310 of the PORTAL Rules and the Reporting Requirements contained in Rule 5332 of the PORTAL Rules to mandate reporting of secondary market transactions in PORTAL U.S. high-yield debt and equity transactions. Except for the security designation requirements, a majority of the remaining provisions are proposed to be deleted as obsolete. Other amendments to the Rules are proposed to revise the security application process and to eliminate other unnecessary provisions in the PORTAL Rules.

[13] The TRACE Rules will replace the Fixed Income Pricing System (''FIPS'') Rules in the Rule 6200 Series. *See* Securities Exchange Act Release No. 42201 (Dec. 3, 1999), 64 FR 69305 (Dec. 10, 1999) (SR–NASD–99–65).

3. Description of the Proposed Amendments

a. Definitions—Rule 5310

i. *PORTAL Equity/Debt Security* Two new definitions are proposed for the terms ''PORTAL equity security'' and ''PORTAL debt security.'' The definition of a PORTAL equity security will include any:

> security that represents an ownership interest in a legal entity, including but not limited to any common, capital, ordinary, preferred stock, or warrant for any of the foregoing, shares of beneficial interest, or the equivalent thereof (regardless of whether voting or non-voting, convertible or non-convertible, exchangeable or non-exchangeable, exerciseable or non-exerciseable, callable or non-callable, redeemable or non-redeemable).

The definition of a PORTAL debt security is proposed to include any: fixed income U.S. corporate bond that is not rated or is rated BB+ or lower by a nationally recognized statistical rating organization, but shall not include convertible debt instruments, medium term notes, sovereign debt, Yankee bonds, municipal and municipal-derivative securities, or asset-backed instruments.[14]

Because of concerns about the technological difficulties and exessive costs associated with implementing trade reporting for the other types of debt securities, the mandatory reporting requirement will only apply to traditional U.S. high-yield debt securities and not to other types of securities.[15]

In addition, The PORTAL Market includes a few issues of Rule '144A investment grade rated debt, although such debt issues do not require PORTAL designation to obtain a CUSIP number and book-entry services at DTC. Any investment grade debt securities that are PORTAL designated will nonetheless be subject to reporting under the proposed TRACE reporting requirements.[16]

ii. *Time of Execution* The proposed definition of ''time of execution'' is ''the time when all of the terms of a transaction in a PORTAL security have been agreed to that are sufficient to calculate the dollar price of the transaction and a determination has been made that the transaction is in compliance with Rule 144A or any other applicable exemption from registration under Section 5 of the Securities Act.'' Therefore, the time for reporting a transaction in a PORTAL equity security and a PORTAL debt security will commence at the time of execution as defined in the PORTAL Rules.[17] The time of execution, as determined by this definition, will be the time included in a trade report.

iii. *PORTAL Market System* The definition of ''PORTAL Market system'' is proposed to be revised to identify one or more computer systems that may be designated by the NASD to accept trade reports or to display transaction, quotation or other information on PORTAL securities.[18]

iv. *PORTAL Transaction Report* The definition of ''PORTAL transaction report'' is also proposed to be revised to mean a report of a transaction in a PORTAL security submitted by a member through a designated PORTAL Market system. Previously, PORTAL transaction reports were only to be submitted by a broker/dealer qualified as a PORTAL broker or PORTAL dealer and such reports were required to be submitted within 15 minutes of the execution of the transaction.

v. *Definitions Proposed to be Deleted* A number of the current definitions that relate to the initial concept for the reporting, comparison, and settlement of PORTAL trades directly through a PORTAL Market computer system are proposed to be deleted in their entirety as no longer necessary. These include the definitions for: ''PORTAL account instruction system,'' ''PORTAL clearing organization,'' ''PORTAL clearing system,'' ''PORTAL depository organization,'' ''PORTAL depository system,'' ''PORTAL Market information,'' ''PORTAL non-participant report,'' ''PORTAL surveillance report,'' and ''Short Sale.''

In addition, it is no longer necessary for the NASD to qualify members as PORTAL dealers or PORTAL brokers or to qualify investors as PORTAL qualified investors for the purpose of entering quotations and viewing quotations in The PORTAL Market. Therefore, the following definitions are proposed to be deleted: ''PORTAL broker,'' ''PORTAL dealer,'' ''PORTAL

[14] Hereinafter, the term ''PORTAL debt security'' will be used to reference only a reportable PORTAL-designated ''fixed income U.S. corporate bond that is not rated or is rated BB+ or lower by a nationally recognized statistical rating organization. * * *'' The definition of a ''TRACE security'' includes PORTAL debt securities.

[15] The staff will consider whether the scope of the definition of PORTAL debt security should be revised to include additional types of debt issues after reporting for debt securities is implemented with respect to registered debt issues pursuant to File No. SR–NASD–99–65, in order to be consistent with the types of issues that will be reportable if registered.

[16] *See* Securities Exchange Act Release No. 42201 (Dec. 3, 1999), 64 FR 69305 (Dec. 10, 1999) (SR–NASD–99–65).

[17] Under the proposed TRACE rules, a member's obligation to determine whether a transaction is exempted from registration will not be applicable for transactions in SEC registered debt securities.

[18] Through this filing and File NO. SR–NASD–99–65, the NASD is designating ACT and TRACE as ''PORTAL Market systems.''

participant,'' and ''PORTAL qualified investor.''

Moreover, the term ''execution'' is proposed to be deleted as it is largely redundant of the term ''transaction'' and would be inconsistent with the proposed definition of the term ''time of execution.''

b. Reporting Requirements

i. *Deleted Provisions* The current provisions of Rule 5332, which require that PORTAL dealers and brokers report transactions in PORTAL securities, are mostly proposed to be deleted. Other provisions that relate to the initial concept for the reporting, comparison, and settlement of PORTAL trades directly through a PORTAL Market computer system are proposed to be deleted in their entirety as no longer necessary. These include Rules 5333 and 5337, which set out the requirements for PORTAL trade comparison and settlement, and Rule 5334 which sets out the contents of a required trade report and the manner of reporting and requires that PORTAL trade reports be disseminated. Also proposed to be deleted are Rules 5335 and 5536, which required broker/dealers that were not approved as PORTAL dealers or brokers to submit a separate trade report and required another trade report (called the ''Surveillance Report'') for reporting the initial sale to a QIB by the broker/dealer under SEC Rule 144A.

ii. *General Reporting Obligation* In place of the current reporting requirements, it is proposed that two new provisions be adopted in Rule 5332 which would obligate members to report secondary market transactions in PORTAL equity and PORTAL debt securities through ACT and TRACE, respectively. Proposed Rule 5332(a) would require that all secondary market ''transactions'' [19] in PORTAL equity securities be reported through ACT, subject to certain exceptions discussed below. The proposed rule incorporates only those provisions currently contained in Rule 6130 of the ACT Rules that apply to trade reporting. Members may, at their option, use the confirmation, comparison, and settlement features of ACT with respect to secondary market transactions in PORTAL equity securities.[20]

Proposed Rule 5332(b) would require that all secondary market transactions in PORTAL debt securities be reported to the TRACE in accordance with the proposed Rule 6200 Series, which include exceptions from reporting as discussed below.[21] Under the proposed TRACE Rules, a PORTAl debt security is included in the definition of a TRACE security. Thus, all secondary market transactions in PORTAL debt securities will be required to comply with all TRACE Rules, including rules mandating reporting and comparison.[22]

iii. *Exceptions From Reporting Obligation* The exceptions to the transaction reporting obligations in Rule 5332 for PORTAL equity and debt securities are the same. These exceptions are contained in proposed Rule 6230(e)(1) through (4) of the TRACE Rules.[23] Their application to PORTAL equity securities is found in proposed rule 5332(a) and to PORTAL debt securities is found in proposed Rule 5332(b).

Proposed Rules 6230(e)(1) and (2) would exempt from reporting those PORTAL debt transactions ''which are part of a primary distribution by an issuer'' or are ''made in reliance on section 4(2) of the Securities Act of 1933. * * *'' A private placement that is considered a ''Rule 144A placement'' is usually conducted in the following manner: the issuer sells its securities to a single broker/dealer in reliance on the private placement exemption from registration in section 4(2) of the Securities Act. The broker/dealer-purchaser then resells such securities to the initial QIB in reliance on Rule 144A. In contrast, in a traditional private placement, the issuer sells its securities to investors under section 4(2) of the Securities Act, with any participating broker/dealer acting solely as agent.

Rule 6230(e)(2) would exempt from reporting the sale by the issuer under section 4(2) of the Securities Act to a broker/dealer acting as purchaser in a ''Rule 144A placement'' and to the investor that purchases through a broker/dealer acting solely as placement agent in a traditional private placement. In addition, however, we propose that the proposed exemption from reporting for a ''primary distribution by an issuer'' in Rule 6230(e)(1) include the ''resale'' by the broker/dealer-purchaser in a ''Rule 144A placement'' to the first QIB purchaser, so long as the broker/dealer-purchaser is acting as an intermediary. Thus, the first secondary market transaction in a PORTAL security (and a TRACE security that is a Rule 144A investment grade rated debt security) that would be subject to trade reporting would be a resale by an investor that has purchased directly from the issuer in a traditional private placement (where a broker/dealer has only acted as an agent) or a resale by a QIB that has purchased directly from the broker/dealer-purchaser in a ''Rule 144A placement.''

Where, however, a broker/dealer purchases PORTAL securities from the issuer in a private placement as an investment or is unable to immediately sell all of the securities it purchased intending to act as an intermediary, the broker/dealer were to hold the PORTAL securities, it would not be obligated to report its purchase of the securities because two reporting exemptions would apply. However, if the broker/dealer were to resell these PORTAL securities it would be obligated to report the resales because no reporting exemption would be available for the resale transaction.

iv. *Information In Trade Reports/Time of Submission* Proposed subparagraphs (a) and (b) of Rule 5332 require that a PORTAL transaction report include the information required by Rule 6130(d) of the ACT Rules in the case of a PORTAL equity security, and the information required by proposed Rule 6230(c) of the TRACE Rules in the case of a PORTAL debt security.

PORTAL transaction reports for equity securities will be required to be submitted no later than 6:30 p.m. Eastern Time to ACT or the currently effective close of the ACT reporting session. As PORTAL equity transactions are unlikely to be reported within 90 seconds of execution, the trade report submitted to ACT will normally include the execution time.

Trade reports for PORTAL debt securities will be required to be submitted within the time frame proposed for debt securities subject to mandatory reporting through TRACE, which is initially proposed to be one hour from the time of execution. However, for purposes of PORTAL debt

[19] The definition of the term ''transaction'' includes any purchase or sale of a PORTAL security and is only intended to refer to secondary market transactions. *See* discussion *infra.*

[20] Thus, the definition of an ''ACT eligible security'' is not proposed to be amended to include PORTAL equity securities. Instead, as set forth in Securities Exchange Act Release No. 40424 (Sept. 10, 1998), 63 FR 49623 (Sept. 16, 1998), the definition of an ''ACT eligible security'' will continue to be interpreted to include all securities designated as PORTAL securities to the extent transactions in such securities are voluntarily submitted to ACT solely for comparison, confirmation, and/or clearance and settlement. *See* note 3, *supra.*

[21] *See* Securities Exchange Act Release No. 42201 (Dec. 3, 1999), 64 FR 69305 (Dec. 10, 1999) (SR–NASD–99–65).

[22] *Id.* In addition, the definition of a TRACE security will include all Rule 144A investment grade rated debt issues that are depository-eligible for book entry services at DTC.

[23] Until TRACE Rules are approved by the Commission and made effective, members obligated to report secondary market transactions in PORTAL equity securities through ACT can rely on the exceptions from reporting in Rule 6240(c) of the Fixed Income Pricing Service Rules.

securities and Rules 144A investment grade rated debt issues that are eligible for DTC book entry services, the definition of the time of execution is different from the applicable to SEC registered debt in that the definition takes into account the member's obligation to make a determination that an exemption from registration is available for the transaction.

v. *Party Obligated to Submit Trade Report* Proposed subparagraphs (a) and (b) of Rule 5332 would incorporate provisions from the ACT and TRACE Rules, respectively, that specify which party to a secondary market transaction in a PORTAL equity or debt security is obligated to report the transaction. Thus, paragraph (c) of Rule 6130 of the ACT Rules would apply to PORTAL equity securities in proposed Rule 5332(a)(3) and paragraph (b) of proposed Rule 6230 of the TRACE Rules would apply to PORTAL debt securities.

vi. *Rule 144/Offshore Transactions Provision* Subparagraph (d) of Rule 5332 is proposed to be renumbered as subparagraph (c) and revised to delete language that applied the reporting requirements to ''any transaction in a PORTAL security.'' This language restates the introductory language in paragraphs (a) and (b), and is unnecessary. The provision, as amended, will clarify that members are obligated under PORTAL Rules to report the resale of PORTAL securities:

- into the U.S. public market under the exemption provided by SEC Rule 144; and
- from the U.S. private market to an offshore market or from an offshore market to the U.S. private market.

However, transactions in PORTAL securities that have been sold offshore under the exemption from registration provided by Regulation S, where the resale transaction is entirely offshore, are not reportable.

vii. *Imposition of Fees for Trade Reporting.* Members submitting trade reports to ACT with respect to secondary market transactions for PORTAL equity securities will be subject to the same fees currently imposed on other members reporting through ACT under the Rule 7000 Series pursuant to proposed Rule 5332(d).

With respect to fees for the submission of trade reports to TRACE, such fees will be proposed in a separate rule filing to be submitted to the Commission and will be located in the NASD Rule 7000 Series.

A general provision in Rule 5374 of the PORTAL Rules setting out the Association's authority to impose fees for PORTAL transactions is proposed to be deleted as unnecessary.

c. Prohibition on Quotations in PORTAL Securities

The NASD is proposing to adopt Rule 5333 to prohibit members from publishing quotations in PORTAL securities in any PORTAL Market system, any electronic communication network (''ECN''), or any other interdealer quotation system. This provision should emphasize the obligation of members not to quote PORTAL securities, which is consistent with the restricted nature of these securities.

d. Designation of PORTAL Securities

i. *Modification of PORTAL Security Application Process.* Rule 5321 currently requires that an application for designation of a security as a PORTAL security shall be submitted by a PORTAL dealer or broker. As it is no longer necessary to qualify broker/dealers as PORTAL dealers and brokers, subparagraph (a) of Rule 5321 is proposed to be amended to permit any member of the NASD or the issuer of the securities to submit an application for designation of a security as a PORTAL security. Conforming changes are proposed to Rule 5323(b) with respect to the procedures for notification to members if the designation of a PORTAL security is suspended or terminated and to Rule 5324 (to be redesignated Rule 5325) to require that the application fee be paid by the issuer or member submitting the application.

In addition, Rule 5321(a) is proposed to be revised to require that an application for designation of a PORTAL security include the undertakings proposed in new subparagraph (c) of Rule 5321. New subparagraph (c) would require that any applicant promptly advise the NASD when the issuer has submitted a registration statement to the SEC to register: (1) The resale of a PORTAL security; (2) securities to be exchanged for a PORTAL security; or (3) securities into which The PORTAL security is exchangeable or convertible. In addition, the applicant would be required to advise the NASD of the effectiveness of such a registration statement. These provisions are intended to provide information to the NASD that will allow it to delete a PORTAL security from its list of current PORTAL securities when the registration statement is declared effective. At that point, any resale of a former-PORTAL designated security will be accomplished through the registered securities.

In addition, Rule 5321(c) would require an applicant to advise the NASD when a CUSIP or CINS security identification is assigned to the PORTAL security or any tranch of a PORTAL security issue. This provision is intended to ensure that the NASD is timely advised of additional CUSIP numbers as they are assigned to a new tranch of an issue designated as a PORTAL security.[24] This information will facilitate the ability of the NASD to accept trade reports of secondary market transactions in PORTAL securities.

In order to provide flexibility in the operation of this provision, the issuer may provide these undertakings in lieu of a member-applicant.

ii. *Modification of PORTAL Security Designation Requirements.* The NASD is proposing that the qualification requirements for PORTAL securities in Rule 5322(a)(3) be amended to require that a PORTAL security must be a ''depository eligible security.'' The definition of this term in Rule 11310 would operate to only include securities with book-entry services at DTC. Consistent with this change, NASD Rule 5322(a)(4) also is proposed to be amended to no longer permit a PORTAL security to be in physical certificate form. This amendment is consistent with the limitation of the proposed mandatory reporting of secondary market transactions U.S. debt securities to those securities that are depository eligible.[25]

iii. *Review of Association Decision.* That part of Rule 5360 which set forth the right of an aggrieved person to seek review by the NASD of a denial, suspension or termination of PORTAL-designation status, is proposed to be relocated to Rule 5324.

e. Deletion of Obsolete Provisions

The NASD is proposing to delete a large number of provisions of the PORTAL Rules. In addition to the deletions discussed above, other provisions are also proposed to be deleted in their entirety as obsolete.

i. *Registration of PORTAL Dealers, Brokers, and Qualified Investors.* The original concept of The PORTAL Market was that approved broker/dealers and investors would trade in a closed system. The remnants of this concept that remain in the PORTAL Rules are proposed to be deleted. Thus, it is proposed that the following rules be deleted that would register PORTAL

[24] Similar to SEC registered offerings, in some cases a private placement will describe a debt issuance that will be done in tranches over a period of time. Each tranch is assigned a different CUSIP number as it is issued.

[25] *See* Securities Exchange Act Release No. 42201 (Dec. 3, 1999), 64 FR 69305 (Dec. 10, 1999) (SR–NASD–99–65).

dealers, brokers, and qualified investors (together, PORTAL participants): Rules 5338, 5339, 5340, 5350, 5351, 5352, and 5353. Rule 5360, which includes the procedures for appeal by a PORTAL participant of any denial, suspension or termination of their registration, is also proposed to be deleted. The section of Rule 5360 that related to appeal rights regarding the designation of a PORTAL security has been incorporated into proposed Rule 5324.

ii. *Quotations, Trading, Uniform Practice.* The PORTAL Rules currently contain a large number of obsolete provisions that were intended to regulate the quotation and trading of PORTAL securities between PORTAL participants on a PORTAL-designated computer system. These provisions are proposed to be deleted. The provisions in the PORTAL Rules proposed to be deleted relate to the quotation of PORTAL securities (Rules 5372, 5373, 5375, 5376, and 5377), uniform practice (Rules 5378, 5379, and 5380),[26] and the application of other NASD rules to PORTAL securities (Rule 5392).

4. Examination and Surveillance

In 1990, the NASD developed an examination module for Rule 144A transactions as part of its examination of underwriting arrangements. The Association has been using that module in its routine member examination process, where appropriate. Surveillance of PORTAL equity securities will be encompassed within parts of the current surveillance procedures for trade reporting into ACT. Surveillance of trade reports submitted with respect to PORTAL debt securities will be encompassed within the surveillance plan for TRACE.

5. Request for Separate Approval and Effective of Debt and Equity Reporting Requirements

The NASD requests that the Commission bifurcate its approval of the proposed rule change so that the proposed rule changes to implement mandatory trade reporting of PORTAL equity securities, to modify the application process for designation of PORTAL securities, and to delete obsolete provisions is not dependent upon Commission approval and implementation of the TRACE Rules proposed in SR–NASD–99–65.

a. PORTAL Equity Securities/Other Amendments

It is not anticipated that TRACE will be implemented until Spring of the year 2000. The NASD, therefore, requests that the Commission separately approve proposed Rule 5332(a) and all other proposed rule changes herein except for Rule 5332(b). Approval would implement mandatory trade reporting of PORTAL equity securities, modify the application process for designation of PORTAL securities, and delete obsolete provisions. When so approved by the Commission, the NASD requests that all rules in this rule filing, except Rule 5332(b), become effective within sixty days of the issuance of a Notice to Members by the Association announcing the proposed rule change. That notice will be issued within 60 days of Commission approval.

b. PORTAL Debt Securities

The NASD requests that proposed Rule 5332(b) which would implement mandatory trade reporting and confirmation of secondary market transactions in PORTAL debt securities pursuant to the proposed TRACE Rules be approved and become effective simultaneously and under the same conditions as the Commission's approval of the proposed rule change to establish the TRACE Rules in SR–NASD–99–65.

Statutory Basis

The NASD believes that the proposed rule change is consistent with the provisions of Section 15A(b)(6)[27] of the Act, which requires, among other things, that the Association's rules must be designed to prevent fraudulent and manipulative acts and practices, to promote just and equitable principles of trade, to foster cooperation and coordination with persons engaged in regulating, clearing, settling, processing information with respect to, and facilitating transactions in securities, to remove impediments to and perfect the mechanism of a free and open market, and, in general, to protect investors and the public interest. The NASD believes that the proposed rule change will facilitate NASD surveillance of secondary market transactions in PORTAL securities, which currently are not subject to mandatory reporting to the Association, in the public interest. In addition, the NASD believes that the proposed rule change will facilitate comparison, confirmation, and settlement of secondary market transactions in PORTAL securities. Finally, the NASD believes that the elimination of obsolete provisions of the PORTAL Rules will remove will remove impediments to the operation of the secondary market in PORTAL securities.

B. Self-Regulatory Organization's Statement on Burden on Competition

The NASD does not believe that the proposed rule change will result in any burden on competition that is not necessary or appropriate in furtherance of the purposes of the Act.

C. Self-Regulatory Organization's Statement on Comments on the Proposed Rule Change Received From Members, Participants, or Others

Written comments were neither solicited nor received.

III. Date of Effectiveness of the Proposed Rule Change and Timing for Commission Action

Within 35 days of the date of publication of this notice in the **Federal Register** or within such longer period (i) as the Commission may designate up to 90 days of such date if it finds such longer period to be appropriate and publishes its reasons for so finding or (ii) as to which the self-regulatory organization consents, the Commission will by order approve such proposed rule change, except Rule 5332(b),[28] or institute proceedings to determine whether the proposed rule change should be disapproved.

IV. Solicitation of Comments

Interested persons are invited to submit written data, views, and arguments concerning the foregoing, including whether the proposal is consistent with the Act. Persons making written submissions should file six copies thereof with the Secretary, Securities and Exchange Commission, 450 Fifth Street, N.W., Washington, D.C. 20549–0609. Copies of the submission, all subsequent amendments, all written statements with respect to the proposed rule change that are filed with the Commission, and all written communications relating to the proposed rule change between the Commission and any person, other than those that may be withheld from the public in accordance with the provisions of 5 U.S.C. 552, will be available for inspection and copying in the Commission's Public Reference Room. Copies of such filing will also be

[26] The NASD's Uniform Practice Code has been amended to apply to resales of restricted securities as defined in Rule 144(a)(3) under the Securities Act. *See* Securities Exchange Act Release No. 38491 (April 9, 1997), 62 FR 18665 (April 16, 1997).

[27] 15 U.S.C. 78*o*–3(b)(6).

[28] The NASD would like the Commission to consider the proposed rules in this filing in conjunction with the proposed rules noticed in Securities Exchange Act Release No. 42201 (Dec. 3, 1999), 64 FR 69305 (Dec. 10, 1999) (SR–NASD–99–65).

available for inspection and copying at the principal office of the NASD.

All submissions should refer to file No. SR–NASD–99–66 and should be submitted by February 3, 2000.

For the Commission, by the Division of Market Regulation, pursuant to delegated authority.[29]

Margaret H. McFarland,

Deputy Secretary.

[FR Doc. 00–818 Filed 1–12–00; 8:45 am]

BILLING CODE 8010–01–M

SECURITIES AND EXCHANGE COMMISSION

[Release No. 34–42317; File No. SR–Phlx–99–48]

Self-Regulatory Organizations; Notice of Filing and Order Granting Accelerated Approval of Proposed Rule Change by the Philadelphia Stock Exchange, Inc. Amending the Exchange's Certificate of Incorporation

January 5, 2000.

Pursuant to Section 19(b)(1) of the Securities Exchange Act of 1934 (''Act''),[1] and Rule 19b–4 thereunder,[2] notice is hereby given that on November 18, 1999, the Philadelphia Stock Exchange, Inc. (''Phlx'' or ''Exchange'') filed with the Securities and Exchange Commission (''SEC'' or ''Commission'') the proposed rule change as described in Items I, II, and III, below, which Items have been prepared by the Exchange. The Phlx filed an amendment to the proposal on November 23, 1999.[3] The Commission is publishing this notice and order to solicit comments on the proposed rule change from interested persons.

I. Self-Regulatory Organization's Statement of the Terms of Substance of the Proposed Rule Change

Proposed Article Twentieth would give the Board the power (1) to assess fees, dues, and other charges upon members, lessors and lessees of memberships, and holders of permits as the Board may from time to time adopt by resolution or set forth in the Rules of the Board, and (2) to assess penalties for failure to pay any fees, dues, or other charges owed to the Exchange, including cancellation of a membership or permit and forfeiture of all rights as a member, lessor, lessee, or holder of a permit. The Board may delegate powers of the Board with respect to the assessment of fees, dues, other charges, and penalties to any committee or the Chairman of the Board. The text of the new Article Twentieth is available at the office of Secretary, the Phlx, and at the Commission.

II. Self-Regulatory Organization's Statement Regarding the Purpose of, and the Statutory Basis for, the Proposed Rule Change

In its filing with the Commission, the Exchange included statements concerning the purpose of, and basis for, the proposed rule change and discussed any comments it received on the proposed rule change. The text of these statements may be examined at the places specified in Item III below. The Exchange has prepared summaries, set forth in sections A, B, and C below, of the most significant aspects of such statements.

A. Self-Regulatory Organization's Statement of the Purpose of, and Statutory Basis for, the Proposed Rule Change

The purpose of the proposed rule change is to amend the Exchange's Certificate of Incorporation to provide Phlx's Board the specific authority to impose fees, dues, and charges upon members, lessors, and lessees of memberships, and holders of permits. Article Twentieth will permit the Board to more equitably allocate dues, fees, and charges among the Exchange's various constituents, thereby ensuring appropriate distribution of costs relating to maintaining and enhancing the competitive operations of the Exchange.

For these reasons, the Exchange believes that the proposed rule change is consistent with section 6(b)[4] of the Act, in general, and with section 6(b)(4),[5] in particular, in that it provides for the equitable allocation of reasonable dues, fees, and other charges among its members, issuers, and other persons using its facilities.

B. Self-Regulatory Organization's Statement on Burden on Competition

The Exchange believes that the proposed rule change imposes no burden on competition.

C. Self-Regulatory Organization's Statement on Comments on the Proposed Rule Change Received from Members, Participants or Others

The Exchange has neither solicited nor received written comments on the proposed rule change.[6]

III. Solicitation of Comments

Interested persons are invited to submit written data, views and arguments concerning the foregoing, including whether the proposed rule change is consistent with the Act. Persons making written submissions should file six copies thereof with the Secretary, Securities and Exchange Commission, 450 Fifth Street, NW, Washington, DC 20549–0609. Copies of the submission, all subsequent amendments, all written statements with respect to the proposed rule change that are filed with the Commission, and all written communications relating to the proposed rule change between the Commission and any person, other than those that may be withheld from the public in accordance with the provisions of U.S.C. 552, will be available for inspection and copying in the Commission's Public Reference Room, 450 Fifth Street, NW, Washington, DC 20549–0609. Copies of such filing will also be available for inspection and copying at the principal office of the Phlx. All submissions should refer to File No. SR–Phlx–99–48 and should be submitted by [insert 21 days from date of publication].

IV. Commission's Findings and Order Granting Accelerated Approval of Proposed Rule Change

After careful consideration, the Commission finds, for the reasons set forth below, that the Phlx's proposal is consistent with the requirements of the act and the rules and regulations

[29] 17 CFR 200.30–3(a)(12).

[1] 15 U.S.C. 78s(b)(1).

[2] 17 CFR 240.19b–4.

[3] *See* Letter from Cynthia Hoekstra, Counsel, Phlx to Richard Strasser, Assistant Director, Division of Market Regulation, Commission, dated November 22, 1999 (''Amendment No. 1''). The Phlx originally filed two new Articles to its Certificate of Incorporation, Article Nineteenth and Article Twentieth. Amendment No. 1 removes from consideration the adoption of Article Nineteenth. On November 22, 1999, the Phlx filed SR–Phlx–99–50 proposing the adoption of Article Nineteenth which provides, in part, that in addition to all other powers granted to the Phlx Board of Governors (''Board'') by law, the Certificate of Incorporation or otherwise, the Board shall have the power to determine whether, and under what terms and conditions, memberships may be leased, and to adopt by resolution or to set forth in the Rules of the Board such rules with respect to leases, lessors and lessees as the Board determines to be advisable.

[4] 15 U.S.C. 78f(b).

[5] 15 U.S.C. 78f(b)(5).

[6] Written comments were received in response to rule filing SR–Phlx–99–43 in which Phlx proposed to charge a $1,500 monthly capital funding fee on each exchange seat owner. On November 17, 1999, the Phlx withdrew SR–Phlx–99–43. On November 26, 1999, the Phlx filed SR–Phlx–99–49, proposing a three-month pilot of the $1,500 monthly capital funding fee, and SR–Phlx–99–51, requesting permanent approval of that proposal. Phlx has also proposed a monthly credit of up to $1,000 to be applied against certain fees,dues, charges, and other amounts owed to the Exchange by an owner who is also a member of the Exchange (SR–Phlx–99–54). In addition, the Exchange has indicated that it intends to submit rule filings relating to trading permits.

thereunder. Specifically, the Commission finds that the proposal is consistent with Section 6(b)(4) of the Act.[7] Section 6(b)(4) of the Act requires that the rules of a national securities exchange provide for the equitable allocation of reasonable dues, fees, and other charges among its members and issuers and other persons using its facilities. The proposal is consistent with Section 6(b)(4) because it will permit the Phlx Board to more equitably allocate dues, fees, and other charges among the Exchange's various constituents, thereby helping to ensure appropriate distribution of costs necessary to maintain and enhance the competitive operations of the Exchange.

The Commission finds good cause for approving the proposed rule change prior to the 30th day after the date of publication of notice thereof in the **Federal Register**. The Phlx has represented that to compete in the current capital market environment the Board must have specific authority to assess fees, dues, and other charges upon members, lessors and lessees of memberships, and holders of permits if and when such permits are proposed by the Phlx and approved by the Commission.[8] Article Twentieth provides that authority. In the context of heightened competition in the options markets the Commission believes it is important for the Phlx to have the necessary authority to respond quickly to competitive pressures. Therefore, the Commission finds good cause for approving the proposed rule change on an accelerated basis.

It is therefore ordered, pursuant to Section 19(b)(2) of the Act,[9] that the proposed rule change (SR–Phlx–99–48) is hereby approved on an accelerated basis. In approving this proposal, the Commission has considered its impact on efficiency, competition, and capital formation.[10]

For the Commission, by the Division of Market Regulation, pursuant to delegated authority.[11]

Margaret H. McFarland,

Deputy Secretary.

[FR Doc. 00–780 Filed 1–12–00; 8:45 am]

BILLING CODE 8010–01–M

[7] 15 U.S.C. 78f(b)(4).

[8] This approval order should not be interpreted as suggesting that the Commission is predisposed to approving any pending Phlx filing to assess fees under the authority of Article Twentieth.

[9] 15 U.S.C. 78s(b)(2).

[10] 15 U.S.C. 78c(f).

[11] 17 CFR 200.30–3(a)(12).

SECURITIES AND EXCHANGE COMMISSION

[Release No. 34–42318; File No. SR–Phlx–99–49]

Self-Regulatory Organizations; Notice of Filing and Order Granting Accelerated Approval of Proposed Rule Change by the Philadelphia Stock Exchange, Inc., Implementing a Pilot Program to Assess a Monthly Capital Funding Fee

January 5, 2000.

Pursuant to Section 19(b)(1) of the Securities Exchange Act of 1934 (''Act''),[1] and Rule 196–4 thereunder,[2] notice is hereby given that on November 26, 1999, the Philadelphia Stock Exchange, Inc. (''Phlx'' or ''Exchange'') filed with the Securities and Exchange Commission (''SEC'' or ''Commission'') the proposed rule change as described in Items I, II, and III, below, which Items have been prepared by the Exchange. On January 5, 2000, Phlx submitted an amendment to the proposed rule filing (''Amendment No. 1'').[3] The Commission is publishing this notice and order to solicit comments on the proposed rule change from interested persons and to approve the proposal until April 5, 2000.

I. Self-Regulatory Organization's Statement of the Terms of Substance of the Proposed Rule Change

The Phlx proposes to amend its schedule of dues, fees, and charges to charge each of the 505 Exchange seat owners[4] a monthly capital funding fee of $1,500 per seat owned.[5] The proposed capital funding fee will be implemented under a three-month pilot program to expire on April 5, 2000.[6]

[1] 15 U.S.C. 78s(b)(1).

[2] 17 CFR 240.19b–4.

[3] *See* Letter from Phlx to Marla Chidsey, Attorney, Division of Market Regulation, Commission, from Bob Ackerman, Senior Vice President, Chief Regulatory Officer, Phlx, dated January 5, 2000. Amendment No. 1 provides Phlx's a fee schedule and is attached as Appendix A.

[4] For the purpose of filing, the term owner is defined as any person or entity who or which is a holder of equitable title to a membership in the Exchange.

[5] Although the term ''seat owner'' is not defined in Phlx's Bylaws or the Certificate of Incorporation, the term seat owner is the equivalent of a ''membership owner'' as referenced in Phlx's Bylaws and Certificate of Incorporation. However, a seat owner is not per se a member of the Phlx Exchange. Telephone conversation between Marla Chidsey, Attorney, Division of Market Regulation, Commission, and Bob Ackerman, Senior Vice President, Chief Regulatory Officer, Phlx (January 5, 2000).

[6] On November 26, 1999, the Exchange filed for permanent approval of the $1,500 capital funding fee. *See* SR–Phlx–99–51. On October 1, 1999, the Exchange filed a proposal to charge the monthly $1,500 capital funding fee. *See* Securities Exchange Act Release No. 42058 (October 22, 1999), 64 FR 58878 (December 15, 1999). However, on November 17, 1999, the Exchange withdrew SR–Phlx–99–43.

II. Self-Regulatory Organization's Statement Regarding the Purpose of, and the Statutory Basis for, the Proposed Rule Change

In its filing with the Commission, the Exchange included statements concerning the purpose of, and basis for, the proposed rule change and discussed any comments it received on the proposed rule change. The text of these statements may be examined at the places specified in Item III below. The Exchange has prepared summaries, set forth in sections A, B, and C below, of the most significant aspects of such statements.

A. Self-Regulatory Organization's Statement of the Purpose of, and Statutory Basis for, the Proposed Rule Change

The purpose of the proposed rule change is to amend Phlx's schedule of dues, fees, and charges to charge a monthly capital funding of $1,500 per Exchange seat to seat owners.[7]

The $1,500 capital funding fee will be imposed on each of the 505 Exchange seat owners on the last business day of the calendar month. Thus, the owner is responsible for paying the entire subsequent month's fee on the last business day of the prior month.[8] The Exchange intends to segregate the funds generated from the $1,500 fee from Phlx's general funds.

The monthly $1,500 fee is part of the Exchange's long-term financing plan. This monthly fee will provide funding for technological improvements and other capital needs.[9] Specifically, it is intended to fund capital purchases, including hardware for capacity upgrades, development efforts for decimalization, and trading floor expansion. The revenue raised from the fee will be utilized over a three-year period. At that time the Exchange intends to reevaluate its financing plan to determine whether this fee should continue. The revenge generated from

[7] Under Phlx's by-laws, seat owners who lease out their seats are not deemed members of the Exchange. *See* Phlx Rules of Board of Governors, Rules 3, 5, 17, and 18.

[8] For example, owners of record on September 30 will be billed $1,500 for the month of October.

[9] This fee is distinguished from the Exchange's technology fee in that the technology fee was intended to cover system software modifications, Year 2000 modifications, specific system development (maintenance) costs, SIAC and OPRA communication charges, and ongoing system maintenance charges. The technology fee became effective upon filing in March, 1997. *See* Securities Exchange Act Release No. 38394 (March 12, 1997), 62 FR 13204 (March 19, 1997) (SR–Phlx–97–09).

the fees will assist the Exchange in remaining competitive in the capital markets environment.[10]

For these reasons, the Exchange believes that the proposed rule change is consistent with Section 6 of the Act,[11] in general, and with Section 6(b)(4),[12] in particular, in that it provides for the equitable allocation of reasonable dues, fees, and other charges among its members, issuers, and other persons using its facilities.

B. Self-Regulatory Organization's Statement on Burden on Competition

The Exchange believes that the proposed rule imposes no burden on competition.

C. Self-Regulatory Organization's Statement on Comments on the Proposed Rule Change Received from Members, Participants or Others

The Exchange received no written comments on the proposal.[13]

III. Solicitation of Comments

Interested persons are invited to submit written data, views, and arguments concerning the foregoing, including whether the proposed rule change is consistent with the Act. Persons making written submissions should file six copies thereof with the Secretary, Securities and Exchange Commission, 450 Fifth Street, NW, Washington, DC 20549–0609. Copies of the submission, all subsequent amendments, all written statements with respect to the proposed rule change that are filed with the Commission, and all written communications relating to the proposed rule change between the Commission and any person, other than those that may be withheld from the public in accordance with the provisions of 5 U.S.C. 552, will be available for inspection and copying in the Commission's Public Reference Room, 450 Fifth Street, NW, Washington, DC 20549–0609. Copies of such filing will also be available for inspection and copying at the principal office of the Phlx. All submissions should refer to File No. SR–Phlx–99–49 and should be submitted by February 3, 2000.

IV. Commission's Findings and Order Granting Accelerated Approval of Proposed Rule Change

After careful consideration, the Commission finds, for the reasons set forth below, that the Phlx's proposal is consistent with the requirements of the Act and the rules and regulations thereunder. Specifically, the Commission finds that the proposal is consistent with Section 6(b)(4) of the Act.[14] Section 6(b)(4) of the Act requires that the rules of a national securities exchange provide for the equitable allocation of reasonable dues, fees, and other charges among its members and issuers and other persons using its facilities. The proposal is consistent with the Act because it is an across-the-board assessment on all seat owners intended to raise revenues to provide capital improvements to the Exchange that the Phlx has represented are necessary to help the Phlx remain competitive with other markets.

The Commission finds good cause for approving the proposed rule change prior to the 30th day after the date of publication of notice thereof in the **Federal Register**. The Phlx has represented that to complete in the current capital market environment the Exchange needs funding to make technological and capital improvements. The Exchange represents that the revenue raised from the fee is necessary to fund capital purchases, including hardware for capacity upgrades, development efforts for decimalization, trading floor expansion, and communication enhancements. Based upon this these representations of the Exchange the Commission deems it appropriate to approve the proposed rule change on an accelerated basis until April 5, 2000.

It is therefore ordered, pursuant to Section 19(b)(2) of the Act,[15] that the proposed rule change (SR–Phlx–99–49) is hereby approved on an accelerated basis until April 5, 2000.[16] In approving this pilot program, the Commission has considered its impact on efficiency, competition, and capital formation.[17]

For the Commission, by the Division of Market Regulation, pursuant to delegated authority.[18]

Margaret H. McFarland,

Deputy Secretary.

APPENDIX A

[New Text Underlined; Deleted Text Bracketed]

Membership dues or Foreign Currency User Fees	1,000.00 semi-annually
Foreign Currency Option Participation Fee	1,000.00 semi-annually
Capital Funding Fee [2]	1,500.00 monthly
Application Fee	200.00
Initiation Fee	1,500.00
Transfer Fee	500.00
Trading Post/Booth	750.00 quarterly
Controller Space	750.00 quarterly
Floor Facility Fees	375.00 quarterly
Shelf Space on Equity Option Trading Floor	375.00 quarterly
Direct Wire to the Floor	60.00 quarterly
Telephone System Line Extensions	22.50 monthly/per extension
Wireless Telephone System	200.00 monthly
Execution Services/Communication Charge	200.00 monthly
Stock Execution Machine Registration Fee (Equity Floor)	300.00
Equity, Option, or FCO Transmission Charge	750.00 monthly
FCO Pricing Tape	600.00 monthly
Option Report Service:	
(New York)	600.00 monthly

[10] In addition, the Exchange has separately proposed to amend its schedule of fees, dues, and charges to allow for a monthly credit of up to $1000 to be applied against certain fees, dues, charges and other amounts owed to the Exchange by an owner who is also a member of the Exchange (SR–Phlx–99–54).

[11] 15 U.S.C. 78f(b).

[12] 15 U.S.C. 78f(b)(5).

[13] However, in connection with SR–Phlx–99–43, *see*, note 6 above, the Exchange received comments from the following parties: Bloom Staloff, Robert W. Baird & Co. Inc., William J. Kramer, Doris Elwell, Benton Partners, Karen D. Janney, Robert Leff, and Vansco, Wayne & Genelly.

[14] 15 U.S.C. 78f(b)(4).

[15] 15 U.S.C. 78s(b)(2).

[16] The Commission's approval of this pilot should not be interpreted as suggesting the Commission is predisposed to approving the proposal permanently.

[17] 15 U.S.C. 78c(f).

[18] 17 CFR 200.30–3(a)(12).

APPENDIX A—Continued

[New Text Underlined; Deleted Text Bracketed]

(Chicago)	800.00 monthly
Quotron Equipment	225.00 monthly
Instinet, Reuters Equipment	Cost passed through
Examination Fee	1,000.00 monthly[3] or pass-through of another SRO's fees
Technology Fee[4]	600.00 semi-annually
Review/Process Subordinated Loans	25.00
Registered Representative Registration:	
Initial	25.00
Maintenance	25.00 annually
Transfer	25.00
Option Mailgram Service	117.00 monthly
Off-Floor Trader Initial Registration Fee	200.00
Off-Floor Trader Annual Fee	200.00
Computer Equipment Services, Repairs or Replacements[5]	100.00 per service call and 75.00 per hour (Two hour minimum)

[1] An exemption from foreign currency user fees is extended to PHLX members also holding title to a foreign currency options participation.

[2] *This fee applies to seat owners (holders of equitable title to a membership in the Exchange) and is assessed on a per-membership basis. This fee is imposed pursuant to a pilot program in effect from January 5, 2000 to April 5, 2000.*

[3] This fee is applicable to member/participant organizations for which the PHLX is the DEA. The following organizations are exempt: (1) inactive organizations (2) organizations operating from the PHLX trading floor which have demonstrated that at least 25% of their income as reflected on the most recently submitted FOCUS Report was derived from floor activities (3) organizations for any month where they incur transaction or clearing fees charged directly by the Exchange or by its registered clearing subsidiary, provided that the fees exceed the examinations fees for that month; and (4) organizations affiliated with an organization exempt from this fee due to the second or third category. Affiliation includes an organization that is a wholly owned subsidiary of or controlled by or under the common control with an exempt member or participant organization. An inactive organization is one which had no securities transaction revenue, as determined by semi-annual FOCUS reports, as longs as the organization continues to have no such revenue each month.

[4] An exemption from the technology fee is extended to foreign currency options participants who are also affiliated with the Exchange as Phlx members.

[5] These fees will be effective from January 1, 2000 until March 31, 2000, unless extended consistent with the requirements of Section 19(b) of the Securities Exchange Act of 1934. At this time, these fees will not be applied to participants on the Foreign Currency Options Trading Floor.

[6] These fees will be effective from January 1, 2000 until March 31, 2000, unless extended consistent with the requirements of Section 19(b) of the Securities Exchange Act of 1934. At this time, these fees will not be applied to participants on the Foreign Currency Options Trading Floor.

[FR Doc. 00–817 Filed 1–12–00; 8:45 am]

BILLING CODE 8010–01–M

SECURITIES AND EXCHANGE COMMISSION

[Release No. 34–42320; File No. SR–SCCP–99–04]

Self-Regulatory Organizations; Notice of Filing and Order Granting Accelerated Temporary Approval of a Proposed Rule Change Relating to the Extention of the Stock Clearing Corporation of Philadelphia's Restructured Business

January 6, 2000.

Pursuant to section 19(b)(1) of the Securities Exchange Act of 1934 (''Act''),[1] notice is hereby given that on December 22, 1999, the Stock Clearing Corporation of Philadelphia (''SCCP'') filed with the Securities and Exchange Commission (''Commission'') the proposed rule change as described in Items I and II below, which Items have been prepared primarily by SCCP. The Commission is publishing this notice to solicit comments on the proposed rule change from interested persons.

[1] 15 U.S.C. 78s(b)(1).

I. Self-Regulatory Organization's Statement of the Terms of Substance of the Proposed Rule Change

Under the proposed rule change, SCCP will continue to provide limited clearance and settlement service for an additional year period through December 31, 2000.

II. Self-Regulatory Organization's Statement of the Purpose of, and Statutory Basis for, the Proposed Rule Change

In its filing with the Commission, PHLX included statements concerning the purpose of and basis for the proposed rule change and discussed any comments it received on the proposed rule change. The text of these statements may be examined at the places specified in Item IV below. PHLX has prepared summaries, set forth in sections (A), (B), and (C) below, of the most significant aspects of such statements.[2]

A. SCCP's Statement of the Purpose of and Statutory Basis for the Proposed Rule Change

SCCP proposes to extend for a one year period through December 31, 2000, its ability to provide limited clearance and settlement services. Specifically, SCCP seeks to continue to provide trade confirmation and recording services for members of PHLX effecting transactions through Regional Interface Operations (''RIO'') and ex-clearing accounts. SCCP will continue to provide an interface between its floor members, specialists, and the National Securities Clearing Corporation (''NSCC''). SCCP will also continue to provide margin services to: (i) PHLX equity specialists for their specialists and alternate specialists transactions and for proprietary transactions in securities for which they are not appointed as specialists of alternate specialists and (ii) PHLX members listed on the schedule, discussed below, who are not PHLX equity specialists for proprietary transactions. SCCP may add other PHLX members to the above referenced schedule subject to NSCC's approval pursuant to its agreement with NSCC and the prior proposed rule change, as discussed below. The clearing services to be conducted by SCCP continue to be through an omnibus account that SCCP maintains at NSCC for such purpose; such services do not include the maintenance or offering of Continuous Net Settlement (''CNS'') accounts for its participants.

[2] The Commission has modified the text of the summaries prepared by SCCP.

Background

In an agreement dated June 18, 1997, (''Agreement'') among the Philadelphia Stock Exchange (''PHLX''), SCCP, Philadelphia Depository Trust Company (''Philadep''), NSCC, and The Depository Trust Company (''DTC''), Philadep and SCCP agreed to certain provisions, including: (i) Philadep would cease providing securities depository services; (ii) SCCP would make available to its participants access to the facilities of one or more other organizations providing depository services; (iii) SCCP would make available to SCCP participants access to the facilities of one or more other organizations providing securities clearing services; and (iv) SCCP would transfer to the books of such other organizations the CNS system open positions of SCCP participants on the books of SCCP.

On December 11, 1997, the Commission issued an order related to the Agreement which reflected Philadep's withdrawal from the depository business and reflected SCCP's restructured and limited clearance and settlement business.[3] The approval order stated that:

> [B]ecause a part of SCCP's proposed rule change concerns the restructuring of SCCP's operations to enable SCCP to offer limited clearing and settlement services to certain PHLX members, the Commission finds that it is appropriate to grant only temporary approval to the portion of SCCP's proposed rule change that amends SCCP's By-Laws, Rules, or Procedures. This will allow the Commission and SCCP to see how well SCCP's restructured operations are functioning under actual working conditions and to determine whether any adjustments are necessary. Thus, the Commission is approving the portion of SCCP's proposal that amends its By-Laws, Rules, or Procedures through December 31, 1998.

In December 1998, the Commission granted a one year extension of such approval allowing SCCP to continue offering its restructured and limited clearance and settlement services.[4]

SCCP proposes an additional one year extension of the approval of its restructured and limited clearing and settlement services. SCCP believes that its restructured operations have functioned consistently with the existing order, and SCCP will continue to evaluate whether any adjustments are necessary.

Purpose

As stated above, SCCP will continue to offer limited clearing and settlement services to PHLX members as well as trade confirmation and recording services for PHLX members effecting transactions through RIO and ex-clearing accounts. In the original rule change approving SCCP's restructured business, many SCCP rules were amended and discussed at length. No new rule changes are proposed at this time. Thus, the purpose of the proposed rule change is to extend the effectiveness of SCCP's restructured business.

Pursuant to Rule 9, SCCP may continue to provide margin accounts for its margin members that clear and settle their transactions through SCCP's omnibus clearance and settlement account.[5] SCCP may continue to demand at any time that a margin member provide additional margin based upon SCCP's review of such margin member's security positions held by SCCP. SCCP will retain the margin thresholds as specified in its Procedures and may require adequate assurances of additional margin in addition to the minimum margin in order to protect SCCP in issues deemed by SCCP to warrant additional protection. SCCP may also continue to demand any such margin payments in federal funds in accordance with its Procedures.

SCCP may continue to issue margin calls to any margin member when the margin requirement exceeds the account equity.[6] SCCP may waive any margin call not exceeding $500. Any failure to meet a margin call shall subject such delinquent margin member to Rule 22, Disciplinary Proceedings and Penalties. SCCP may cease to act for such delinquent margin members and may retain a lien on all such margin members' accounts and securities therein.

SCCP will continue to maintain records on each individual margin account. SCCP will continue to maintain the omnibus clearance and settlement account to reflect all positions in SCCP's margin accounts. SCCP will continue to guarantee the settlement obligations of the omnibus clearance and settlement account to NSCC. In turn, pursuant to the Agreement, PHLX will continue to guarantee SCCP's obligations to NSCC.

SCCP's book and records for the omnibus clearance and settlement account will continue to reflect all activity that occurs in such account at NSCC and DTC. At any time prior to midnight (Philadelphia time) on the next business day after SCCP receives a margin member's trade, SCCP will continue to be entitled to reverse the trade from the margin member's account. SCCP will continue to settle the omnibus clearance and settlement account with NSCC each business day in accordance with NSCC's rules and procedures. Accordingly, SCCP will continue to be subject to NSCC's rules.

Through the omnibus clearance and settlement account, SCCP will continue to have one composite settlement per day with NSCC. SCCP will maintain line of credit arrangements with one or more commercial banks sufficient to support anticipated funding needs of the underlying margin accounts.

To ensure that margin members have an efficient way to obtain securities depository services after the closure of Philadep's depository service, SCCP opened a depository account at DTC. In the event that margin members effect trades in securities not eligible for custodial services in DTC's book-entry system, SCCP will continue to utilize the Direct Clearing Service to settle these transactions. SCCP will continue to perform bookkeeping and reconciliation services for the omnibus clearance and settlement account and its related DTC custody account pursuant to SCCP Procedures.

In accordance with NSCC's participants fund formulae, SCCP, as a NSCC participant and sponsored participant of DTC, will continue to be required to provide NSCC and DTC with participants fund contribution. SCCP will continue to apply a fixed $35,000 contribution for the specialist margin account and non-specialist margin account categories and a contribution of $10,000 to $75,000 for a RIO account, depending upon monthly trading activity. Participants engaging in more than one account type activity would continue to be subject only to the formula that would generate the highest contribution. Furthermore, SCCP's participants fund will continue to be governed by SCCP Rule 4.

Statutory Basis

SCCP believes the extension of the Commission's temporary approval to permit SCCP's continued operation of its restructured and limited clearance and settlement services is consistent with the requirements of the Act and the rules and regulations thereunder applicable to SCCP and in particular with Section 17A(b)(3)(F) which requires that a clearing agency be

[3] Securities Exchange Act Release No. 39444 (Dec. 11, 1997), 63 FR 66703 [File Nos. SR–DTC–97–16, SR–NSCC–97–08, SR–Philadep–97–04, SR–SCCP–97–04].

[4] Securities Exchange Act Release No. 34–40872, File No. SR–SCCP–98–05, Dec. 31, 1998 (''continuation of limited clearance and settlement services'').

[5] The definition of ''margin member'' in Rule 1 continues to reflect those PHLX floor firms entitled to clear through a SCCP margin account.

[6] ''Account equity'' is defined in SCCP Rule 1.

organized and its rules be designed, among other things, to promote the prompt and accurate clearance and settlement of securities transactions, to safeguard funds and securities in its possession and control, and to remove impediments to perfect the mechanism of a national system for the prompt and accurate clearance and settlement of securities transactions. SCCP believes that the extension of SCCP's restructured business should promote the prompt and accurate clearance and settlement of securities transactions by integrating and consolidating clearing services available to the industry; further, it should assure the safeguarding of securities and funds in the custody or control of SCCP or for which SCCP is responsible, consistent with the aforementioned provisions of the Act.

B. Self-Regulatory Organization's Statement on Burden on Competition

SCCP does not believe that this extension will impose any burden on competition not necessary or appropriate in furtherance of the purposes of the Act.

C. Self-Regulatory Organization's Statement on Comments on the Proposed Rule Change Received From Members, Participants or Others

Written comments were neither solicited nor received with respect to the proposed rule change.

III. Date of Effectiveness of the Proposed Rule Change and Timing for Commission Action

Section 17A(b)(3)(F) of the Act [7] requires that the rules of a clearing agency be designed to promote the prompt and accurate clearance and settlement of securities transactions. Based on the information the Commission has to date, the Commission believes that SCCP's restructured operations have functioned satisfactorily under actual working conditions to provide prompt and accurate clearance and settlement. During the upcoming temporary approval period, the Commission will review with SCCP in further detail SCCP's restructured operations.

SCCP has requested that the Commission find good cause for approving the proposed rule change prior to the thirtieth day after publication of the notice of filing. The Commission finds good cause for approving the proposed rule change prior to the thirtieth day after the publication of notice of the filing. By approving prior to the thirtieth day after publication of notice, the Commission will be approving the continuation of SCCP's restructured clearing operation as soon as practicable after the previous temporary approval expired on December 31, 1999.

IV. Solicitation of Comments

Interested persons are invited to submit written data, views, and arguments concerning the foregoing, including whether the proposed rule change is consistent with the Act. Persons making written submissions should file six copies thereof with the Secretary, Securities and Exchange Commission, 450 Fifth Street, NW, Washington, DC 20549–0609. Copies of the submission, all subsequent amendments, all written statements with respect to the proposed rule change that are filed with the Commission, and all written communications relating to the proposed rule change between the Commission and any person, other than those that may be withheld from the public in accordance with the provisions of 5 U.S.C. 552, will be available for inspection and copying the Commission's Public Reference Room. Copies of such filing will also be available for inspection and copying at the principal office of SCCP. All submissions should refer to File No. SR–SCCP–99–04 and should be submitted by February 3, 2000.

It is therefore ordered, pursuant to section 19(b)(2) of the Act, that the proposed rule change (File No. SR–SCCP–99–04), be, and hereby is, approved on an accelerated basis through December 31, 2000.

For the Commission by the Division of Market Regulation, pursuant to delegated authority.[8]

Margaret H. McFarland,

Deputy Secretary.

[FR Doc. 00–782 Filed 1–12–00; 8:45 am]

BILLING CODE 8010–01–M

[7] 15 U.S.C. 78q–(b)(3)(F).

[8] 17 CFR 200.3(a)(12).

DEPARTMENT OF STATE

Office of Defense Trade Controls

[Public Notice 3195]

Munitions Exports Involving China National Aero-Technology Import and Export Corporation (CATIC), China National Aero-Technology International Supply Company, CATIC (USA), Inc., Tal Industries, Inc., Yan Liren and Hu Boru (Employees of CATIC), McDonnell Douglas Corporation, Douglas Aircraft Company, and Robert Hitt (Employee of McDonnell Douglas and Douglas Aircraft)

AGENCY: Department of State.

ACTION: Notice.

SUMMARY: Notice is hereby given that it shall be the policy of the Department of State to deny all export license applications and other requests for approval pursuant to section 38 of the Arms Export Control Act, that request authorization for the export, the brokering activity involving, the transfer by, for or to, or transactions that involve directly or indirectly by or to: China National Aero-Technology Import and Export Corporation (CATIC), China National Aero-Technology International Supply Company, CATIC (USA) Inc., Tal Industries, Inc., Yan Liren, Hu Boru, McDonnell Douglas Corporation, Douglas Aircraft Company, and Robert Hitt, and any of their subsidiaries, affiliates, or successor entities in connection with the transactions involving defense articles or defense services. This policy also precludes the use in connection with such entities of any exemptions from license or other approval included in the International Traffic in Arms Regulations (ITAR) (22 CFR Parts 120–130) except as those exemptions directly pertain to licenses or other written approvals granted prior to October 19, 1999.

EFFECTIVE DATE: October 19, 1999.

FOR FURTHER INFORMATION CONTACT: Mary F. Sweeney, Acting Chief, Compliance and Enforcement Branch, Office of Defense Trade Controls, Department of State (703 875–6644, Ext. 3).

SUPPLEMENTARY INFORMATION: A sixteen count indictment was returned on October 19, 1999, in the U.S. District Court for the District of Columbia, charging China National Aero-Technology Import and Export Corporation, China National Aero-Technology International Supply Company, CATIC (USA) Inc., Yan Liren, Hu Boru (employees of CATIC),

McDonnell Douglas Corporation, Douglas Aircraft Company, and Robert Hitt (employee of McDonnell Douglas and Douglas Aircraft), with conspiring (18 U.S.C. 371) to violate and violating Section 11 of the Export Administration Act (50 U.S.C. 2401–2420); aiding and abetting (18 U.S.C. 2); making false statements (18 U.S.C. 1001); and violating the International Emergency Economic Powers Act (50 U.S.C. 1701–1706) regarding details of a 1994 sale of American machining equipment, some of which was diverted to a Chinese military site. The indictment charges the defendants with making material false, fraudulent and misleading statements and material omissions on the applications, and end user certificates upon which the Department of Commerce granted 10 export licenses to McDonnell Douglas and Douglas Aircraft permitting the export of 13 pieces of machinery that bend and shape steel for aerospace products to the People's Republic of China (PRC), for use by a PRC owned company called China National Aero-Technology Import and Export Corporation (CATIC). The defendants, CATIC and TAL caused six of the 13 pieces of machinery to be diverted to an unauthorized end-user in Nanchang, PRC, known for military production. (*United States* v. *China National Aero-Technology Import and Export Corporation, et al.,*) U.S. District Court for the District of Columbia, Criminal Docket No. 1:99–CR–00353).

Note: Commercial exports from the United States of certain equipment that could make a significant contribution to the technology and military potential of other countries is governed by the Export Administration Act of 1979, 50 U.S.C. App. sections 2401–2420 and the Export Administration Regulations, 15 C.F.R. Parts 768–799. Although the Export Administration Act expired August 20, 1994, the implementing regulations, the Export Administration Regulations, were continued in effect pursuant to Executive Order.

On October 19, 1999, the Department of State instituted a policy of denial of all requests for licenses and other written approvals (including all activities under manufacturing license and technical assistance agreements and brokering activities) concerning exports of defense articles and provision of defense services, by, for or to, or other transactions involving directly or indirectly, the above-named defendants and any of their affiliates, subsidiaries, or successor entities. Furthermore, the Department precluded the use in connection with those defendants of any exemptions from license or other approval included in the ITAR except as those exemptions directly pertain to licenses or other written approvals granted prior to October 19, 1999.

This action has been taken pursuant to sections 38 and 42 of the Arms Export Control Act (AECA) (22 U.S.C. 2778 and 2791) and 22 CFR 126.7(a)(2) and 126.7(a)(3) of the ITAR. It will remain in force until rescinded.

Exceptions may be made to this denial policy on a case-by-case basis at the discretion of the Office of Defense Trade Controls. However, such an exception will be granted only after a full review of all circumstances, paying particular attention to the following factors: whether an exception is warranted by overriding U.S. foreign policy or national security interests; whether an exception would further law enforcement concerns; and whether other compelling circumstances exist which are consistent with the foreign policy or national security interests of the United States, and which do not conflict with law enforcement concerns.

A person indicted for violating or conspiring to violate the Export Administration Act or International Emergency Economic Powers Act may submit a written request for reconsideration of the denial policy to the Office of Defense Trade Controls. Such request for reconsideration should be supported by evidence of remedial measures taken to prevent future violations of the AECA and/or the ITAR and other pertinent documented information showing that the person would not be a risk for future violations of the AECA and/or the ITAR. The Office of Defense Trade Controls will evaluate the submission in consultation with the Departments of Treasury, Justice, and other necessary agencies. After a decision on the request for reconsideration has been made by the Assistant Secretary for Political-Military Affairs, the requester will be notified whether the exception has been granted.

Dated: January 3, 2000.

Eric D. Newsom,

Assistant Secretary, Bureau of Political-Military Affairs, Department of State.

[FR Doc. 00–836 Filed 1–12–00; 8:45 am]

BILLING CODE 4710–25–U

DEPARTMENT OF TRANSPORTATION

Federal Aviation Administration

RTCA Special Committee 172; Future Air-Ground Communications in the VHF Aeronautical Data Band (118–137 MHz)

Pursuant to section 10(a)(2) of the Federal Advisory Committee Act (Pub. L. 92–463, 5 U.S.C., Appendix 2), notice is hereby given for Special Committee 172 meeting to be held February 22–24, 2000, starting at 9:00 a.m. The meeting will be held at RTCA, 1140 Connecticut Avenue, NW., Suite 1020, Washington, DC 20036.

The agenda will be as follows: February 22: (1) Plenary Convenes at 9:00 a.m. for 30 minutes: (2) Introductory Remarks; (3) Review and approval of the Agenda. (9:30 a.m.) (4) Working Group (WG)–2, VHF Data Radio Signal-in-Space Minimum Aviation System Performance Standards, final work and vote on VDL Mode 3 document. February 23: (5) WG–3 review of VHF digital radio Minimum Operational Performance Standards document progress and furtherance of work. February 24: Plenary Reconvenes at 9:00 a.m.: (6) Review Summary Minutes of Previous Plenary of SC–172; (7) Reports from WG–2 and WG–3 on Activities; (8) Report on ICAO Aeronautical Mobile Communications Panel Working Group Activities; (9) EUROCAE WG–47 Report and discuss schedule for further work with WG–3; (10) Review Issues List and Address Future Work; (11) Other Business; (12) Dates and Locations of Next Meeting; (p.m.) (13) WGs continues as necessary.

Attendance is open to the interested public but limited to space availability. With the approval of the chairman, members of the public may present oral statements at the meeting. Persons wishing to present statements or obtain information should contact the RTCA Secretariat, 1140 Connecticut Avenue, NW., Suite 1020, Washington, DC 20036; (202) 833–9339 (phone); (202) 833–9434 (fax); or http://www.rtca.org (web site). Members of the public may present a written statement to the committee at any time.

Issued in Washington, DC, on January 7, 2000.

Janice L. Peters,

Designated Official.

[FR Doc. 00–866 Filed 1–12–00; 8:45 am]

BILLING CODE 4910–13–M

DEPARTMENT OF TRANSPORTATION

Federal Aviation Administration

RTCA Special Committee 194; ATM Data Link Implementation

Pursuant to section 10(a)(2) of the Federal Advisory Committee Act (Pub. L. 92–463, 5 U.S.C., Appendix 2), notice is hereby given for Special Committee 194 meeting to be held February 7–11, 2000, starting at 9:00 a.m. each day. The

meeting will be held at RTCA, 1140 Connecticut Ave., NW, Suite 1020, Washington, DC 20036.

The agenda will include: February 7: 9:00 a.m. to 12 Noon, (1) Working Group (WG)–2, Flight Operations & ATM Integration; (2) WG–3, Human Factors. 1:00–5:00 p.m., Plenary: (3) Welcome and Introductions; (4) Review meeting agenda; (5) Review/Approve previous meeting summary; (6) Distribute Ballot Comments for WG–3 Document; (7) Presentation of WG–3 document: Human Factors Minimum Operational Performance Standards for Control Pilot Data Link Communications Systems: Build 1 and Build 1A. February 8–9: Working Group meetings; (8) Data Link Ops Concept & Implementation Plan (WG–1); (9) Flight Operation & ATM Integration (WG–2); (10) Human Factors (WG–3), and (11) Service Provider Interface (WG–4). February 10: Plenary Session: (12) Working Group reports (Update on work programs and expected document completion dates); (13) Review, discussion, disposition of ballot comments on WG–3 Document; (14) Other Business; February 11: Plenary Session continues: (15) Review, discussion, and disposition of ballot comments on WG–3 Document; (16) Date and location of next meeting; (17) Closing.

Attendance is open to the interested public but limited to space availability. With the approval of the chairman, members of the public may present oral statements at the meeting. Persons wishing to present statements or obtain information should contact the RTCA Secretariat, 1140 Connecticut Avenue, NW., Suite 1020, Washington, DC 20036; (202) 833–9339 (phone); (202) 833–9434 (fax); or http://www.rtca.org (web site). Members of the public may present a written statement to the committee at any time.

Issued in Washington, DC, on January 7, 2000.

Janice L. Peters,

Designated Official.

[FR Doc. 00–867 Filed 1–12–99; 8:45 am]

BILLING CODE 4910–13–M

DEPARTMENT OF TRANSPORTATION

Federal Highway Administration

Highway Motor Fuel Reporting Reassessment; Public Workshops

AGENCY: Federal Highway Administration (FHWA), DOT.

ACTION: Notice; Public workshops.

SUMMARY: The FHWA Office of Highway Policy Information is sponsoring two one-day workshops to discuss the reporting of motor fuel information. The purpose of these workshops is to provide information on the reporting of motor fuel data from the States to the FHWA, the process by which the FHWA attributes Federal revenue to the States using the State-provided data, and to discuss and gather input on potential changes to the reporting procedures. The FHWA invites Federal and State Government agencies and interested public groups and individuals to attend.

DATES: The workshops will be conducted between 8:30 a.m. and 3:15 p.m. (local times). The locations and dates are listed below:

1. January 27, 2000, Marriott Philadelphia Downtown, 1201 Market St., Philadelphia, PA 19107, tel: 215–625–2900. The hotel is offering a government rate of $113 per night for a single room, plus taxes. Please contact the hotel as soon as possible, but not later than January 21, 2000, to reserve your room and receive the government rate. Refer to the Federal Highway Motor Fuel Workshop when making your reservation.

2. February 24, 2000, Adams Mark Hotel, 1550 Court Place, Denver, CO 80202, tel: 303–893–3333. The hotel is offering a government rate of $83 per night for a single room, plus taxes. Please contact the hotel as soon as possible, but not later than January 23, 2000, to reserve your room and receive the government rate. Refer to the Federal Highway Motor Fuel Workshop when making your reservation.

FOR FURTHER INFORMATION CONTACT: Specifics on registration and hotel accommodation information are available by calling Ms. Evangeline Pappas of Harrington-Hughes and Associates, Inc; at (202) 347–3511. For workshop issues, contact Ms. Marsha Reynolds at (202) 366–5029, or Mr. Ralph C. Erickson at (202) 366–9235, Office of Highway Policy Information.

SUPPLEMENTARY INFORMATION:

Electronic Access

An electronic copy of this document may be downloaded by using a computer, modem and suitable communications software from the Government Printing Office's Electronic Bulletin Board Service at (202)512–1661. Internet users may reach the Office of the Federal Register's home page at: *http://www.nara.gov/fedreg* and the Government Printing Office's web page at: *http://www.access.gpo.gov/nara.* The ''Guide to Reporting Highway Statistics,'' is electronically available for review at the URL: *http://www.fhwa.dot.gov/ohim/ghwystat.htm.*

Background

The current motor-fuel reporting structure has served apportionment and information needs very well. (*See* chapter 2 of the ''Guide to Reporting Highway Statistics,'' which is electronically available as provided above.) However, the more extensive use of motor fuel data for apportionments under Federal legislation suggests that updating and improving the current reporting structure is necessary. While improvements in the current structure have been made, a number of reporting issues remain.

The FHWA, in conjunction with the American Association of State Highway and Transportation Officials (AASHTO) and the Federation of Tax Administrators (FTA), has initiated a review of its motor-fuel reporting process. As part of this review, the FHWA has held two meetings of a committee composed of representatives from State departments of transportation and revenue, and others, to discuss and develop recommendations for motor fuel reporting improvements. The FHWA has begun to consolidate these recommendations, but is seeking further information from State data reporters and other experts in the subject matter.

Many States have expressed a strong interest in better understanding the attribution process, and in reporting motor fuel data to support each State's fair share of the attribution. About $11 billion annually in funds are apportioned based on State-reported motor fuel as provided in the Transportation Equity Act for the 21st Century, Public Law 105–178, 112 Stat. 107 (1998). The workshops on highway motor fuel reporting will provide an opportunity for States to achieve a better understanding of this process and provide input on reporting improvements.

Authority: 23 U.S.C. 315; sections 1103 and 1104 of the Transportation Equity Act for the 21st Century, Pub. L. 105–178, 112 Stat. 107 (1998); and 49 CFR 1.48.

Issued on: January 10, 2000.

Walter L. Sutton, Jr.,

Associate Administrator for Policy.

[FR Doc. 00–870 Filed 1–12–00; 8:45 am]

BILLING CODE 4910–22–P

DEPARTMENT OF TRANSPORTATION

Federal Railroad Administration

[Docket No. FRA–1999–6404]

Extension of Comment Period; Petition for Grandfathering of Non-Compliant Equipment; National Railroad Passenger Corporation

On October 18, 1999, the National Railroad Passenger Corporation (Amtrak) petitioned the Federal Railroad Administration (FRA) for grandfathering of non-compliant passenger equipment manufactured by Renfe Talgo of America (Talgo) for use on rail lines between Vancouver, British Columbia and Eugene, Oregon; between Las Vegas, Nevada and Los Angeles, California; and between San Diego, California and San Luis Obispo, California. Notice of receipt of such petition was published in the **Federal Register** on November 2, 1999, at 64 FR 59230. Interested parties were invited to comment on the petition before the end of the comment period of December 2, 1999.

On December 2, 1999, FRA extended the comment period in this proceeding until December 15, 1999, following a Freedom of Information Act (FOIA) request that certain items in FRA files referenced in Amtrak's petition be made available for review (see 64 FR 68195; Dec. 6, 1999). Talgo has objected to release of certain of the requested information under FOIA exemption 4 (5 U.S.C. 552(b)(4)), which exempts from release trade secrets and commercial or financial information obtained from a person that is privileged or confidential. On December 15, 1999, FRA further extended the comment period in this proceeding until 10:00 a.m. on December 27, 1999 to enable FRA to finalize its response to the FOIA request, and to permit the responder time to analyze the documents released by FRA (see 64 FR 71846; Dec. 22, 1999). Unfortunately, processing the FOIA request has taken longer than anticipated; FRA released documents on November 30, December 10, and December 21. FRA has redacted from the documents released information that is protected under FOIA exemption 4. The FOIA commenter has appealed to the FRA Administrator FRA's decision to redact certain of the information contained in the requested documents; FRA is processing this appeal.

On December 13, the FOIA requester again asked FRA to further extend the comment period so that the requester would have 15 days after receipt of all of the requested documents to analyze the documents and prepare comments on the grandfather petition. FRA agreed to this request and on December 23, 1999, extended the comment period to the close of business on January 10, 2000 (see 64 FR 73602; Dec. 30, 1999).

FRA has placed in the docket for this proceeding a copy of the documents provided to the FOIA requester for this request. FRA has also placed in the docket several documents that it received from Talgo that are relevant to the Amtrak petition. Two of these documents contain comments or corrections to the minutes of the June 17, 1999 meeting between FRA, Amtrak and Talgo; the minutes of this meeting was one of the documents released to the FOIA requester. Another document contains weld information pertaining to the Talgo equipment. The remaining documents contain design changes to the Talgo equipment requested by FRA. Talgo has requested confidential treatment, under exemption 4 of FOIA, for certain information in the documents. FRA has redacted from the Talgo documents information that is protected by exemption 4.

On January 4, 2000, the FOIA requester made a further request for documents related to Amtrak's petition. FRA is currently processing this request; while a partial response was provided on January 6, 2000, the full response will not be complete before January 10. On January 7, the FOIA requester asked that FRA extend the comment period. FRA is extending the comment period until January 31, 2000, to enable FRA time to respond to the FOIA request in full, and to permit the responder time to analyze the documents released by FRA. FRA expects that further extensions of the comment period will not be necessary.

FRA will place in the docket a copy of the documents provided to the FOIA requester for this further request. Unredacted versions of all of the documents placed in the docket are available to agency staff and will be used in the agency's review of the Amtrak petition to the extent deemed necessary.

Comments received after January 31, 2000 will be considered to the extent possible. Amtrak's petition, documents inserted in the docket, and all written communications concerning this proceeding are available for examination during regular business hours (9:00 a.m. to 5:00 p.m.) at DOT Central Docket Management Facility, Room PL–401 (Plaza Level), 400 Seventh, S.W., Washington, D.C. 20590–0001. All documents in the public docket are also available for inspection and copying on the Internet at the docket facility's Web site at http://dms.dot.gov.

Issued in Washington, DC on January 7, 2000.

Grady C. Cothen, Jr.,

Deputy Associate Administrator for Safety Standards and Program Development.

[FR Doc. 00–784 Filed 1–12–00; 8:45 am]

BILLING CODE 4910–06–P

DEPARTMENT OF TRANSPORTATION

Maritime Administration

Reports, Forms and Recordkeeping Requirements; Agency Information Collection Activity Under OMB Review

AGENCY: Maritime Administration, DOT.

ACTION: Notice and request for comments.

SUMMARY: In compliance with the Paperwork Reduction Act of 1995 (44 U.S.C. 3501 *et seq.*), this notice announces that the Information Collection abstracted below has been forwarded to the Office of Management and Budget (OMB) for review and comment. The nature of the information collection is described as well as its expected burden. The **Federal Register** Notice with a 60-day comment period soliciting comments on the following collection of information was published on November 1, 1999 [64 FR 58905].

DATES: Comments must be submitted on or before February 14, 2000.

FOR FURTHER INFORMATION CONTACT: Jean McKeever, Office of Ship Financing, Room 8122, Maritime Administration, MAR–770, 400 Seventh Street, SW., Washington, DC 20590. Telephone 202–366–5744 or FAX 202–366–7901. Copies of this collection can also be obtained from that office.

SUPPLEMENTARY INFORMATION: Maritime Administration (MARAD).

Title: Capital Construction Fund and Exhibits.

OMB Control Number: 2133–0027.

Type of Request: Extension of currently approved collection.

Affected Public: Owners and operators of U.S.-flag vessels.

Form (s): None.

Abstract: This information collection consists of application for a Capital Construction Fund (CCF) agreement under section 607 of the Merchant Marine Act, 1936 as amended, and annual submissions of appropriate schedules and exhibits. The Capital Construction Fund is a tax-deferred ship construction fund that was created to assist owners and operators of U.S.-flag vessels in accumulating the large amount of capital necessary for the

modernization and expansion of the U.S. merchant marine. The program encourages construction, reconstruction, or acquisition of vessels through the deferment of Federal income taxes on certain deposits of money or other property placed into a CCF.

Annual Estimated Burden Hours: 2130 hours.

ADDRESSES: Send comments to the Office of Information and Regulatory Affairs, Office of Management and Budget, 725 17th Street, NW, Washington, DC 20503, Attention MARAD Desk Officer.

Comments Are Invited on: Whether the proposed collection of information is necessary for the proper performance of the functions of the agency, including whether the information will have practical utility; the accuracy of the agency's estimate of the burden of the proposed information collection; ways to enhance the quality, utility and clarity of the information to be collected; and ways to minimize the burden of the collection of information on respondents, including the use of automated collection techniques or other forms of information technology. A comment to OMB is best assured of having its full effect if OMB receives it within 30 days of publication.

Issued in Washington, DC on January 7, 2000.

Joel C. Richard,

Secretary, Maritime Administration.

[FR Doc. 00–820 Filed 1–12–00; 8:45 am]

BILLING CODE 4910–81–P

DEPARTMENT OF TRANSPORTATION

Maritime Administration

Marine Transportation System National Advisory Council

AGENCY: Maritime Administration.

ACTION: Notice of establishment of advisory committee.

SUMMARY: The Maritime Administration announces the establishment of the Marine Transportation System National Advisory Council (MTSNAC). The MTSNAC will advise the Secretary of Transportation, via the Council Sponsor, the Administrator of the Maritime Administration, on matters relating to the Marine Transportation System (MTS)—waterways, ports, and their intermodal connections.

ADDRESSES: You may request a copy of the charter for the Council by writing to Kathleen R. Dunn, Maritime Administration, MAR 810, Room 7209, Washington, DC 20590; by calling (202) 366–2307; or by faxing (202) 366–6988.

FOR FURTHER INFORMATION CONTACT: Kathleen R. Dunn, telephone (202) 366–2307, fax (202) 366–6988.

SUPPLEMENTARY INFORMATION: The MTSNAC is being established in accordance with the recommendations made in the Report to Congress titled ''An Assessment of the U.S. Marine Transportation System.'' The Council will consider matters relating to current and future MTS needs. These matters will include not only strategies to ensure a safe, environmentally sound, and secure MTS that improves the global competitiveness and national security of the U.S., but also issues and concerns brought to the Council by elements of the marine transportation industry or such other matters that the Secretary may charge the Council with addressing. The Council shall be composed of representatives from not more than 30 non-Federal organizations from the marine transportation industry as designated by the Secretary of Transportation. The member organizations shall represent a cross section of the diverse components that comprise the MTS including private sector organizations and state and local public entities. At least two meetings will be held each calendar year. As required by section 9(a)(2) of the Federal Advisory Committee Act 5 U.S.C. App. 2, Sec. 9(a)(2) and 41 CFR 101–6.1007, the Department of Transportation (DOT) has consulted with the Committee Management Secretariat of the General Services Administration and the Office of Management and Budget. DOT certifies that the creation of this advisory committee is necessary and is in the public interest. This notice is published pursuant to section 9(a)(2) of the Federal Advisory Committee Act, 5 U.S.C. App. 2, Sec. 9(a)(2) and 41 CFR 101–6.1015.

Duration: The duration of the Council shall be continuing.

Authority: 5 U.S.C. App. 2, Sec. 9(a)(2); 41 CFR 101–6. 1005; DOT Order 1120.3B.

Dated: January 7, 2000.

By Order of the Maritime Administrator.

Joel C. Richard,

Secretary.

[FR Doc. 00–819 Filed 1–12–00; 8:45 am]

BILLING CODE 4910–81–P

DEPARTMENT OF TRANSPORTATION

Surface Transportation Board

[STB Finance Docket No. 33813]

RailAmerica, Inc.—Control Exemption—RailTex, Inc.

AGENCY: Surface Transportation Board.

ACTION: Notice of Exemption.

SUMMARY: The Surface Transportation Board (Board) has exempted under 49 U.S.C. 10502 the acquisition by RailAmerica, Inc. (RailAmerica), a railroad holding company, of direct control of RailTex, Inc. (RailTex), a railroad holding company, and indirect control of RailTex's 17 domestic Class III rail carriers.

DATES: This exemption will be effective on January 14, 2000. Petitions to reopen must be filed by February 2, 2000.

ADDRESSES: Send pleadings (an original and 25 copies) referring to STB Finance Docket No. 33813 to: Surface Transportation Board, Office of the Secretary, Case Control Unit, 1925 K Street, N.W., Washington, DC 20423–0001. In addition, send one copy of pleadings to Rail America's representative: Louis E. Gitomer, Of Counsel, Ball Janik LLP, 1455 F Street, N.W., Suite 225, Washington, DC 20005.

FOR FURTHER INFORMATION CONTACT: Julia M. Farr, (202) 565–1613. [Assistance for the hearing impaired is available through TDD/TDY services at 1–800–877–8339.]

SUPPLEMENTARY INFORMATION: Additional information is contained in the Board's decision. To obtain a copy of the full decision, write to, call or pick up in person from: Da-To-Da Office Solutions, Mercury Building, 1925 K Street, N.W., Room 210, Washington, DC 20006. Until further notice, Da-To-Da Office Solutions' telephone number in the Mercury Building will be (202) 289–4357. In addition, Board decisions and notices are available on our website at ''WWW.STB.DOT.GOV.''

Decided: January 7, 2000.

By the Board, Chairman Morgan, Vice Chairman Burkes and Commissioner Clyburn.

Vernon A. Williams,

Secretary.

[FR Doc. 00–858 Filed 1–12–00; 8:45 am]

BILLING CODE 4915–00–P

DEPARTMENT OF THE TREASURY

Treasury Advisory Committee on Commercial Operations of the U.S. Customs Service

AGENCY: Department Offices, Treasury.

ACTION: Notice of meeting.

SUMMARY: This notice announces the date and time for the next meeting and the provisional agenda for consideration by the Committee.

DATES: The next meeting of the Treasury Advisory Committee on Commercial

Operations of the U.S. Customs Service will be held on Friday, January 28, 2000 at 9:30 a.m. in the Secretary's large conference room, Room 3327, U.S. Treasury Department, 1500 Pennsylvania Avenue, NW, Washington, DC. The meeting location is subject to change. Final meeting details including the location and agenda, can be verified with the contact office below one week prior to the meeting date. The duration of the meeting will be approximately three hours.

FOR FURTHER INFORMATION CONTACT: Dennis M. O'Connell, Director, Office of Tariff and Trade Affairs, Office of the Under Secretary (Enforcement), Room 4004, Department of the Treasury, 1500 Pennsylvania Avenue, NW, Washington, DC 20220. Tel.: (202) 622–0220.

AGENDA: At the January 28, 2000 session, the regular quarterly meeting of the Advisory Committee, the Committee is expected to pursue the following agenda. The agenda may be modified prior to the meeting.

1. Reports on Subcommittee progress:
   (a) Study of Merchandise Processing Fee
   (b) Study of Resources for the Office of Rulings and Regulations
   (c) Study of Compliance Assessment Team (CAT) methodology
2. Customs entry procedure revision project
3. Status of the ''Tin Man'' in-bond program and discussion of the results of the statistical sampling.

SUPPLEMENTARY INFORMATION: The meeting is open to the public; however, participation in the Committee's deliberations is limited to Committee members and Customs and Treasury Department staff. A person other than an Advisory Committee member who wishes to attend the meeting should give advance notice by contacting Theresa Manning at (202) 622–0220, no later than January 21, 2000.

Dated: January 7, 2000.

John P. Simpson,

Deputy Assistant Secretary (Regulatory, Tariff, and Trade Enforcement).

[FR Doc. 00–778 Filed 1–12–00; 8:45 am]

BILLING CODE 4810–25–M

DEPARTMENT OF THE TREASURY

Fiscal Service

Surety Companies Acceptable on Federal Bonds: British American Insurance Company

AGENCY: Financial Management Service, Fiscal Service, Department of the Treasury.

ACTION: Notice.

SUMMARY: This is Supplement No. 9 to the Treasury Department Circular 570; 1999 Revision, published July 1, 1999, at 64 FR 35864.

FOR FURTHER INFORMATION CONTACT: Surety Bond Branch at (202) 874–6779.

SUPPLEMENTARY INFORMATION: A Certificate of Authority as an acceptable surety on Federal bonds is hereby issued to the following Company under 31 U.S.C. 9304 to 9308. Federal bond-approving officers should annotate their reference copies of the Treasury Circular 570, 1999 Revision, on page 35869 to reflect this addition:

British American Insurance Company. Business Address: P.O. Box 1590, Dallas Texas 75211–1590. Phone: (214) 443–5500. Underwriting Limitation b/: $1,921,000. Surety Licenses c/: TX. Incorporated in: Texas.

Certificates of Authority expire on June 30 each year, unless revoked prior to that date. The Certificates are subject to subsequent annual renewal as long as the companies remain qualified (31 CFR Part 223). A list of qualified companies is published annually as of July 1 in Treasury Department Circular 570, with details as to underwriting limitations, areas in which licensed to transact surety business and other information.

The Circular may be viewed and downloaded through the Internet at http://www.fms.treas.gov/c570/index.html. A hard copy may be purchased from the Government Printing (GPO) Subscription Service, Washington, DC, Telephone (202) 512–1800. When ordering the Circular from GPO, use the following stock number: 048000–00527–6.

Questions concerning this Notice may be directed to the U.S. Department of the Treasury, Financial Management Service, Financial Accounting and Services Division, Surety Bond Branch, 3700 East-West Highway, Room 6A04, Hyattsville, MD 20782.

Dated: January 3, 2000.

Wanda J. Rogers,

Director, Financial Accounting and Services Division, Financial Management Service.

[FR Doc. 00–809 Filed 1–12–00; 8:45 am]

BILLING CODE 4810–35–M

DEPARTMENT OF THE TREASURY

Fiscal Service

Surety Companies Acceptance on Federal Bonds: Seneca Insurance Company, Inc.

AGENCY: Financial Management Service, Fiscal Service, Department of the Treasury.

ACTION: Notice.

SUMMARY: This is Supplement No. 10 to the Treasury Department Circular 570; 1999 Revision, published July 1, 1999, at 64 FR 35864.

DATES: Surety Bond Branch at (202) 874–6507.

SUPPLEMENTARY INFORMATION: A Certificate of Authority as an acceptable surety on Federal bonds is hereby issued to the following Company under 31 U.S.C. 9304 to 9308. Federal bond-approving officers should annotate their reference copies of the Treasury Circular 570, 1999 Revision, on page 35888 to reflect this addition:

Seneca Insurance Company, Inc. Business Address: 160 Water Street, New York, NY 10038–4922. Phone: (212) 344–3000. Underwriting Limitation b/: $2,769,000. Surety Licenses c/: AL, AK, AZ, AR, CA, CO, CT, DE, DC, FL, GA, HI, ID, IL, IN, IA, KS, KY, LA, ME, MD, MA, MI, MN, MS, MO, MT, NE, NV, NH, NJ, NM, NY, NC, ND, OH, OK, OR, PA, RI, SC, SD, TN TX, UT, VT, VA, WA, WV, WI, WY. Incorporated in: New York.

Certificates of Authority expire on June 30, each year, unless revoked prior to that date. The Certificates are subject to subquent annual renewal as long as the companies remain qualified (31 CFR Part 223). A list of qualified companies is published annually as of July 1 in Treasury Department Circular 570, with details as to underwriting limitations, areas in which licensed to transact surety business and other information.

The Circular may be viewed and download through the Internet at http://www.fms.treas.gov/c570/index.html. A hard copy may be purchased from the Government Printing Office (GPO) Subscription Service, Washington, DC, Telephone (202) 512–1800. When ordering the Circular from GPO, use the following stock number: 04800–00527–6.

Questions concerning this Notice may be directed to the U.S. Department of the Treasury, Financial Management Service, Financial Accounting and Service Division, Surety Bond Branch, 3700 East-West Highway, Room 6AS04, Hyattsville, MD 20782.

Dated: January 3, 2000.

Wanda J. Rogers,

Director, Financial Accounting and Services Division, Financial Management Service.

[FR Doc. 00–810 Filed 1–12–00; 8:45 am]

BILLING CODE 4810–35–M

Corrections

Federal Register

Vol. 65, No. 9

Thursday, January 13, 2000

This section of the FEDERAL REGISTER contains editorial corrections of previously published Presidential, Rule, Proposed Rule, and Notice documents. These corrections are prepared by the Office of the Federal Register. Agency prepared corrections are issued as signed documents and appear in the appropriate document categories elsewhere in the issue.

DEPARTMENT OF ENERGY

Office of Energy Efficiency and Renewable Energy

10 CFR Part 431

[Docket No. EE–RM–96–400]

RIN 1904–AA82

Energy Efficiency Program for Certain Commercial and Industrial Equipment: Test Procedures, Labeling, and Certification Requirements for Electric Motors

Correction

In rule document 99–21119 beginning on page 54114, in the issue of Tuesday, October 5, 1999, make the following corrections:

§ 431.81 [Corrected]

1. On page 54161, in the second column, in § 431.81, in the second line, ''[ONE YEAR AFTER PUBLICATION OF THIS RULE IN THE Federal Register]'' should read ''October 5, 2000''.

§ 431.123 [Corrected]

2. On page 54162, in the first column, in § 431.123(a), in the second line, ''[insert date 30 days after publication in the **Federal Register**]'' should read ''November 4, 1999''.

3. On page 54163, in the first column, in § 431.123(f)(2)(i)(B), in the first line, ''paragraph (f)(2)'' should read ''paragraph (f)(3)''.

§ 431.42 [Corrected]

4. On page 54158, in § 431.42(a), the table is corrected to read as follows:

	Nominal Full Load Efficiency					
	Open Motors (Number of poles)			Enclosed Motors (Number of poles)		
	6	4	2	6	4	2
Motor Horsepower/Standard Kilowatt Equivalent						
1/.75	80.0	82.5	.....	80.0	82.5	75.5
1.5/1.1	84.0	84.0	82.5	85.5	84.0	82.5
2/1.5	85.5	84.0	84.0	86.5	84.0	84.0
3/2.2	86.5	86.5	84.0	87.5	87.5	85.5
5/3.7	87.5	87.5	85.5	87.5	87.5	87.5
7.5/5.5	88.5	88.5	87.5	89.5	89.5	88.5
10/7.5	90.2	89.5	88.5	89.5	89.5	89.5
15/11	90.2	91.0	89.5	90.2	91.0	90.2
20/15	91.0	91.0	90.2	90.2	91.0	90.2
25/18.5	91.7	91.7	91.0	91.7	92.4	91.0
30/22	92.4	92.4	91.0	91.7	92.4	91.0
40/30	93.0	93.0	91.7	93.0	93.0	91.7
50/37	93.0	93.0	92.4	93.0	93.0	92.4
60/45	93.6	93.6	93.0	93.6	93.6	93.0
75/55	93.6	94.1	93.0	93.6	94.1	93.0
100/75	94.1	94.1	93.0	94.1	94.5	93.6
125/90	94.1	94.5	93.6	94.1	94.5	94.5
150/110	94.5	95.0	93.6	95.0	95.0	94.5
200/150	94.5	95.0	94.5	95.0	95.0	95.0

[FR Doc. C9–21119 Filed 1–12–00; 8:45 am]

BILLING CODE 1505–01–D

DEPARTMENT OF ENERGY

Federal Energy Regulatory Commission

[Project No. 2077-000]

USGen New England, Inc.; Notice Modifying a Restricted Service List for Comments on a Programmatic Agreement for Managing Properties Included in or Eligible for Inclusion In the National Register of Historic Places

Correction

In notice document 00–319 beginning on page 1149 in the issue of Friday, January 7, 2000, the docket number should read as set forth above.

[FR Doc. C0–0319 Filed 1–12–00; 8:45 am]

BILLING CODE 1505–01–D

DEPARTMENT OF THE TREASURY

Internal Revenue Service

[REG-209823-96]

Proposed Collection; Comment Request For Regulation Project

Correction

In notice document 99–32698, beginning on page 70761, in the issue of Friday, December 17, 1999, in the **DATES:** section, in the second line, ''January 18, 2000'' should read ''February 15, 2000''.

[FR Doc. C9–32698 Filed 1–12–00; 8:45 am]

BILLING CODE 1505–01–D

Federal Register

Thursday
January 13, 2000

Part II

Department of Transportation

Federal Railroad Administration

49 CFR Parts 222 and 229

Use of Locomotive Horns at Highway-Rail Grade Crossings; Proposed Rule

DEPARTMENT OF TRANSPORTATION

Federal Railroad Administration

49 CFR Parts 222 and 229

[Docket No. FRA–1999–6439, Notice No. 1]

RIN 2130–AA71

Use of Locomotive Horns at Highway-Rail Grade Crossings

AGENCY: Federal Railroad Administration (FRA), Department of Transportation (DOT).

ACTION: Notice of proposed rulemaking.

SUMMARY: FRA is proposing rules to require that a locomotive horn be sounded while a train is approaching and entering a public highway-rail crossing. The proposed rules also provide for an exception to the above requirement in circumstances in which there is not a significant risk of loss of life or serious personal injury, use of the locomotive horn is impractical, or supplementary safety measures fully compensate for the absence of the warning provided by the horn. This rule is required by law.

DATES: *Written Comments:* Comments must be received by May 26, 2000. Comments received after that date will be considered to the extent possible without incurring additional expense or delay.

Public Hearings: FRA will hold public hearings to receive oral comments from interested parties. The dates and specific location of hearings will be announced in a subsequent **Federal Register** document and on FRA's web site at *http://fra.dot.gov.* Cities in which hearings will be held are listed in **ADDRESSES** section below.

ADDRESSES: *Written Comments:* Anyone wishing to file a comment should identify the FRA docket and notice numbers (Docket No. FRA–1999–6439, Notice No.1). Comments should be sent to the Docket Management System, U.S. Department of Transportation, room PL–401, 400 Seventh Street, S.W., Washington, D.C. 20590–0001. Written comments will be available for public review during regular business hours at the above address and through the Internet at *http://dms.dot.gov.*

Public Hearings: Public hearings will be held in the following cities: Los Angeles, California; Washington, D.C.; Ft. Lauderdale, Florida; Chicago, Illinois; South Bend, Indiana; Berea, Ohio; Pendleton, Oregon; and Boston, Massachusetts. The specific location and date of each hearing will be announced in a subsequent **Federal Register** document and on FRA's web site at *http://fra.dot.gov.*

FOR FURTHER INFORMATION CONTACT: Ron Ries, Office of Safety, FRA, 1120 Vermont Avenue, N.W., Washington, D.C. 20590 (telephone: 202–493–6299); or Mark Tessler, Office of Chief Counsel, FRA, 1120 Vermont Avenue, N.W., Washington, D.C. 20590 (telephone: 202–493–6038).

SUPPLEMENTARY INFORMATION:

Background

Approximately 4,000 times per year, a train and highway vehicle collide at one of this country's 262,000 public and private highway-rail grade crossings. Of those crossings, more than 158,000 are public at-grade crossings—those crossings in which a public road crosses railroad tracks at grade. During the years 1994 through 1998, there were 21,242 grade crossing collisions in the United States. These collisions one of the greatest cause of death associated with railroading, resulting in more than 400 deaths each year. For example, in the 1994–1998 period, 2,574 people died in these collisions. Another 8,308 people were injured. Approximately 50 percent of collisions at highway-rail intersections occur at those intersections equipped with active warning devices such as bells, flashing lights, or gates (approximately 62,000 crossings).

Compared to a collision between two highway vehicles, a collision with a train is eleven times more likely to result in a fatality, and five and a half times more likely to result in a disabling injury. The average freight locomotive weighs between 140 and 200 tons, compared to the average car weight of one to two tons. Many freight trains weigh in excess of ten thousand tons. Any highway vehicle, even a large truck, would be crushed when struck by a moving train. The laws of physics compound the likelihood that a motor vehicle will be crushed in a collision with a moving train. The train's weight, when combined with the likelihood that the train will not be able to stop to avoid a collision, results in severe injury or death in virtually every collision (it takes a one-hundred car train traveling 30 miles per hour approximately half a mile to stop—at 50 miles an hour that train's stopping distance increases to one and a third miles).

FRA is responsible for ensuring that America's railroads are safe for both railroad employees and the public. FRA shares with the public the responsibility to confront the compelling facts surrounding grade crossing collisions.

In 1990, as part of FRA's crossing safety program, the agency studied the impact of train whistle bans (i.e., state or local laws prohibiting the use of train horns or whistles at crossings) on safety in Florida. (In this document the terms ''whistle'' and ''horn'' are used interchangeably to refer to the air powered locomotive audible warning device required to be installed on locomotives by 49 CFR 229.129, and to steam whistles required to be installed on steam locomotives by 49 CFR 230.121. These terms do not refer to a locomotive bell, which has value as a warning to pedestrians but which is not designed to provide a warning over long distances.) FRA had previously recognized the locomotive horn's contribution to rail safety by requiring that lead locomotives be equipped with an audible warning device, 49 CFR 229.129, and exempting the use of whistles from federal noise emission standards ''when operated for the purpose of safety.'' 49 CFR 210.3(b)(3). The Florida study, which is discussed below (and which has been filed in the docket), documented how failing to use locomotive horns can significantly increase the number of collisions.

A. Who Is at Risk in a Grade Crossing Collision?

Many people have argued that highway drivers who disobey the law and try to beat a train through a crossing should not be protected at the expense of the peace and quiet of communities that parallel railroad tracks. FRA strongly agrees that drivers who unlawfully enter grade crossings should be fined by local police, but death or serious injury is simply not a just penalty.

Overlooked in this emotional debate are the many innocent victims of crossing collisions, including blameless automobile and railroad passengers and railroad crews who, despite performing their duties correctly, are usually unable to avoid the collisions. Nationally, from 1994 to 1998, eight railroad crewmembers died in collisions at highway-rail crossings, and 570 crewmembers were injured. Two hundred railroad passengers were also injured and two died. In Bourbonnais, Illinois, earlier this year, eleven innocent passengers died in their sleeper car following a collision with a truck at a highway-rail crossing. In addition, since approximately one-half of all collisions occur at grade crossings that are not fully equipped with warning devices, some of the drivers involved in these collisions may have been unaware of the approaching train.

Property owners living near railroad rights-of-way can also be at risk. For example, on December 1, 1992, in Hiebert, Alabama, a freight train collided with a lumber truck. Three

locomotives and nine rail cars were derailed, releasing 10,000 gallons of sulfuric acid into a nearby water supply. Residents living near the derailment site had to be evacuated because of the chemical spill. Even where the locomotive consist is not derailed in the initial collision with the highway vehicle, application of the train's emergency brake can result in derailment and harm to persons and property along the right-of-way.

Law-abiding motorists can also be endangered in crossing collisions. On March 17, 1993, an Amtrak train collided with a tanker truck in Fort Lauderdale, Florida. Five people died when 8,500 gallons of burning fuel from the tanker truck engulfed cars waiting behind the crossing gates.

Highway passengers can also be innocent victims. On December 14, 1995, in Ponchatoula, Louisiana, five people were killed when their truck was hit by an Amtrak train. Among the dead were three children who were passengers in the truck.

In making a decision on the use of locomotive horns, all of the competing interests must be reasonably considered. Those whose interests will be affected by this rule include those who may be disturbed by the sounding of locomotive horns and all of those who may suffer in the event of a collision; pedestrians using the crossing; the motor vehicle driver and passengers, those in adjacent vehicles, train crews, and those living or working nearby.

B. FRA's Study of the Florida Train Whistle Ban

Effective July 1, 1984, Florida authorized local governments to ban the nighttime use of whistles by intrastate trains approaching highway-rail grade crossings equipped with flashing lights, bells, crossing gates, and highway signs that warned motorists that train whistles would not be sounded at night. Fla. Stat. § 351.03(4)(a) (1984). After enactment of this Florida law, many local jurisdictions passed whistle ban ordinances.

In August 1990, FRA issued a study of the effect of the Florida train whistle ban up to the end of 1989. The study compared the number of collisions at crossings subject to bans with four control groups. FRA was trying to determine the impact of the whistle bans and to eliminate other possible causes for any increase or decrease in collisions.

Using the first control group, FRA compared collision records for time periods before and during the bans. FRA found there were almost three times more collisions after the whistle bans were established, a 195 percent increase. If collisions continued to occur at the same rate as before the bans began taking effect, it was estimated that 49 post-ban collisions would have been expected. However, 115 post-ban collisions occurred, leaving 66 crossing collisions statistically unexplained. Nineteen people died and 59 people were injured in the 115 crossing collisions. Proportionally, 11 of the fatalities and 34 of the injuries could be attributed to the 66 unexplained collisions.

In the second control group, FRA found that the daytime collision rates remained virtually unchanged for the same highway-rail crossings where the whistle bans were in effect during nighttime hours.

The third control group showed that nighttime collisions increased only 23 percent along the same rail line at crossings with no whistle ban.

Finally, FRA compared the 1984 through 1989 accident record of the Florida East Coast Railway Company (FEC), which, because it was considered an ''intrastate'' carrier under Florida law, was required to comply with local whistle bans, with that of the parallel rail line of interstate carrier, CSX Transportation Company (CSX), which was not subject to the whistle ban law. By December 31, 1989, 511 of the FEC's 600 gate-equipped crossings were affected by whistle bans. Collision data from the same period was available for 224 similarly equipped CSX crossings in the six counties in which both railroads operate. As noted above, FRA found that FEC's nighttime collision rate increased 195 percent after whistle bans were imposed. At similarly equipped CSX crossings, the number of collisions increased 67 percent.

On July 26, 1991, FRA issued an emergency order to end whistle bans in Florida. Notice of that emergency order (Emergency Order No. 15) was published in the **Federal Register** at 56 FR 36190. FRA is authorized to issue emergency orders where an unsafe condition or practice creates ''an emergency situation involving a hazard of death or injury.'' 49 U.S.C. 20104. FRA acted after updating its study with 1990 and initial 1991 collision records and finding that another twelve people had died and thirteen were injured in nighttime collisions at whistle ban crossings. During this time, a smaller study, conducted by the Public Utility Commission of Oregon, corroborated FRA's findings and led to the cessation of state efforts to initiate a whistle ban in Oregon.

FRA's emergency order required that trains operated by the FEC sound their whistles when approaching public highway-rail grade crossings. This order preempted state and local laws that permitted the nighttime ban on the use of locomotive horns.

Twenty communities in Florida petitioned for a review of the emergency order. During this review, FRA studied other potential causes for the collision increase. FRA's closer look at the issue strengthened the conclusion that whistle bans were the likely cause of the increase.

For example, FRA subtracted collisions that whistles probably would not have prevented from the collision totals. Thirty-five collisions where the motor vehicle was stopped or stalled on the crossing were removed from the totals. Eighteen of these collisions occurred before and 17 were recorded during the bans. When these figures were excluded, the number of collisions in the pre-ban period changed from 39 to 21, and the number of collisions in the post-ban period decreased from 115 to 98. Collisions which whistles could have prevented, therefore, totaled 98 collisions as compared to 21 collisions in the pre-ban period; this represents a 367 percent increase, compared to the 195 percent increase initially calculated.

Similarly, if collisions where the motor vehicle hit the side of the train were also excluded (nine in the pre-ban period and 26 in the post-ban period) as being unlikely to have been prevented by train whistles, the pre-ban collision count became 12 versus 72 in the whistle ban period. The increase in collisions caused by the lack of whistles then became 500 percent.

FRA's data, however, showed that, before the ban, highway vehicles on average, struck the sides of trains at the 37th train car behind the locomotive. After the ban took effect, 26 vehicles struck trains, and on average, struck the twelfth train car behind the locomotive. This indicated that motor vehicles are more cautious at crossings if a locomotive horn is sounding nearby. Before the whistle bans, highway vehicles tended to hit the side of the train after the whistling locomotive had long passed through the crossing. After the ban took effect, highway traffic hit the train much closer to the now silent locomotive—at the 12th car. The number of motor vehicles hitting the sides of trains also increased nearly threefold after the ban was established.

FRA also considered collisions involving double tracked grade crossings where two trains might approach at the same time. Since a driver's view of the second train might be blocked, hearing the second train's whistle could be the only warning

available to an impatient driver. FRA's Florida study found the number of second train collisions for the pre-ban period was zero, while four were reported for the period the bans were in effect.

Several Florida communities asked whether train speed increased collisions. FRA research has well established, as discussed below, that train speed is not a factor in determining the likelihood of a traffic collision at highway-rail crossings equipped with active warning devices that include gates and flashing lights. Speed, however, is a factor in determining the severity of a collision.

FRA also considered population growth in Florida, but found it was not a factor. Day time collision rates were not increasing at the very same crossings that had whistle bans at night. If population was a factor, then the day time numbers should have increased dramatically as well. FRA also reviewed the number of fatal highway collisions, and registered drivers and motor vehicles and found no increases that either paralleled or explained the rise in night time crossing collisions.

In the first two years after July 1991, when FRA issued its emergency order prohibiting whistle bans in Florida, collision rates dropped dramatically to pre-ban levels. In the two years before the emergency order, there were 51 nighttime collisions. In the two years after, there were only 16. Daytime collisions dropped slightly from 34 collisions in the two years before the emergency order, to 31 in the following two years.

C. FRA's Nationwide Study of Train Whistle Bans

FRA's Florida study raised the concern that whistle bans could be increasing collisions in other locations. Given the wide difference between grade crossing conditions from one community to another, FRA did not assume that the Florida results would be true at every whistle ban crossing. FRA began a nationwide effort to locate grade crossings subject to whistle bans and study collision information for those crossings. The Association of American Railroads (AAR) joined the FRA in that effort.

The AAR surveyed the rail industry and found 2,122 public grade crossings subject to whistle bans for some period of time between January 1988 and June 30, 1994. This total did not include the 511 public crossings that were subject to whistle bans in Florida that FRA had already studied. The study also did not include crossings on small, short line railroads, which did not report to the AAR. The nationwide survey found whistle bans in 27 states that affected 17 railroads. FRA studied collisions occurring between January 1988, and June 30, 1994.

Two thousand and four of the crossings were subject to 24-hour whistle bans. Another 118 grade crossings were subject to nighttime-only bans. The states with the largest number of whistle ban crossings were Illinois, Wisconsin, Kentucky, New York, and Minnesota. More than half of the crossings were on three railroads: CSX, Consolidated Rail Corporation (Conrail), and Soo Line. A report covering the nationwide study was issued in April 1995. FRA found that whistle ban crossings averaged 84 percent more collisions than similar crossings with no bans. There were 948 collisions at whistle ban crossings during the period studied. Sixty-two people died in those collisions and 308 were injured. Collisions occurred on every railroad with crossings subject to whistle bans, and in 25 of the 27 states where bans were in effect.

Since the 1995 study, FRA has continued to analyze relevant data. Over the period of 1992–1996, there were 793 collisions at 2,366 crossings subject to whistle bans. These collisions resulted in the fatalities and injuries displayed in Table 1, as well as more than $2 million in motor vehicle damages.

TABLE 1.—COLLISION INJURIES AND FATALITIES BY TYPE OF PERSON INVOLVED

Type of person involved	Injuries	Fatalities
Motorist	258	56
Pedestrian	17	41
Railroad employee	56	0

The types of collisions which took place at whistle ban crossings are shown in Table 2. It is interesting to note that the mean train speed (train speed is positively correlated with fatalities) varies by type of collision. Please note that the number of fatalities shown for category ''hit by second train'' are included in the other categories (97 fatalities).

TABLE 2.—TYPE OF COLLISION

Type of collision	Injuries	Fatalities	Mean train speed
Motor vehicle struck train	51	8	15.5
Train struck motor vehicle	224	89	25.4
Hit by second train	11	5	28.5

The driver was killed in the collision in 42 instances (5.3% of collisions), the remaining 55 fatalities were either passengers or pedestrians. The driver passed standing vehicles to go over the crossing in 37 of the collisions (4.7%). The driver was more likely to be killed when moving over the crossing at the time of the collision (35 of the driver fatalities), rather than when the vehicle was stopped or stalled at the crossing, and in most of the collisions (69.9%) at whistle-ban crossings the driver was moving over the crossing. Additionally, in almost every collision (97%), a warning device (either active or passive) was located on the vehicle's side of the crossing. This supports the theory that the warning given by the train horn could deter the motorist from entering the crossing.

Collisions which took place when the motorist was moving over the crossing were more likely to be fatal (72% of the fatalities). This type of collision was also more likely to result in injury with 209 of the 258 motorist injuries occurring under these circumstances. These are the types of collisions the proposed rule is designed to prevent. Motorists that fail to notice or heed the warning devices in place at a crossing may be deterred by the sound of a train horn. The motorist is also given information by the horn about the proximity, speed, and direction of the train.

Collisions occurred on every railroad with crossings subject to whistle bans, and in 25 of the 27 states where bans were in effect.

FRA's study indicated that the installation of automatic traffic gates at crossings with whistle bans was more than twice the national average. Forty percent of the whistle ban crossings had gates compared to 17 percent nationally.

FRA found 831 crossings where whistle sounding had at one time been in effect, but where the practice had changed during the January 1988 through June 1994 study period. In 87 percent of the cases, bans were no longer in effect. A ''before-and-after'' analysis comparing collision rates showed an average of 38 percent fewer collisions when whistles were sounded indicating that whistles had a .38 effectiveness rate in reducing collisions. This finding paralleled the Florida experience.

FRA also rated whistle ban grade crossings according to an ''Accident Prediction Formula.'' The formula predicts the statistical likelihood of having a collision at a given highway-rail grade crossing. The physical characteristics of each crossing were considered in the formula, including the number of tracks and highway lanes, types of warning devices, urban or rural location, and whether the roadway was paved. Also considered were operational aspects, such as, the number of highway vehicles, and the number, type, time of day, and maximum speed of trains using the crossing. The formula was developed using data from thousands of collisions spanning many years. FRA then ranked the 167,000 public crossings in the national inventory at that time in an identical manner. Both the whistle ban crossings and the national inventory crossings were then placed into one of ten groups ranging from low-risk to high-risk.

FRA compared the number of collisions occurring within each of the ten groups of crossings, over a five year period from 1989 through 1993, and found that for nine out of the ten risk groups, the whistle ban crossings had significantly higher collision rates than the crossings with no whistle bans. On average, the risk of a collision was found to be 84 percent greater at crossings where train horns were silenced. Another way to interpret this difference would be to say that locomotive horns had a .46 effectiveness rate in reducing the rate of collisions.

FRA was concerned about the higher risk disclosed by the nationwide study. From its vantage point, FRA was able to see the elevated risk associated with whistle bans, which might not be apparent to local communities. While crossing collisions are infrequent events at individual crossings, the nationwide study, and the experience in Florida, showed they were much less infrequent when train horns were not sounded.

FRA conducted an outreach program in order to promptly share this information with all communities where bans were in effect. In addition to issuing press releases and sending informational letters to various parties, FRA met with community officials and participated in town meetings. Along with the study's findings, information about the upcoming rule requiring the sounding of train horns was presented, including provisions for supplementary safety measures that could be implemented by communities to compensate for silenced train horns and allow bans to remain in effect.

From the outreach effort, FRA gained a clearer understanding of local concerns and issues. Many of those concerns were expressed in person and others were submitted in writing to FRA's whistle ban docket. Another result of the outreach effort was the identification of 664 additional crossings that were subject to whistle bans, but not included in the nationwide study. About 95 percent of these were located in the city and suburbs of Chicago, Illinois. Many carry a high volume of commuter rail traffic.

Recently, FRA updated its analysis of the safety at whistle ban crossings, expanding it to include data for all the Chicago area crossings as well as for a few other newly identified locations.

BILLING CODE 4910–06–P

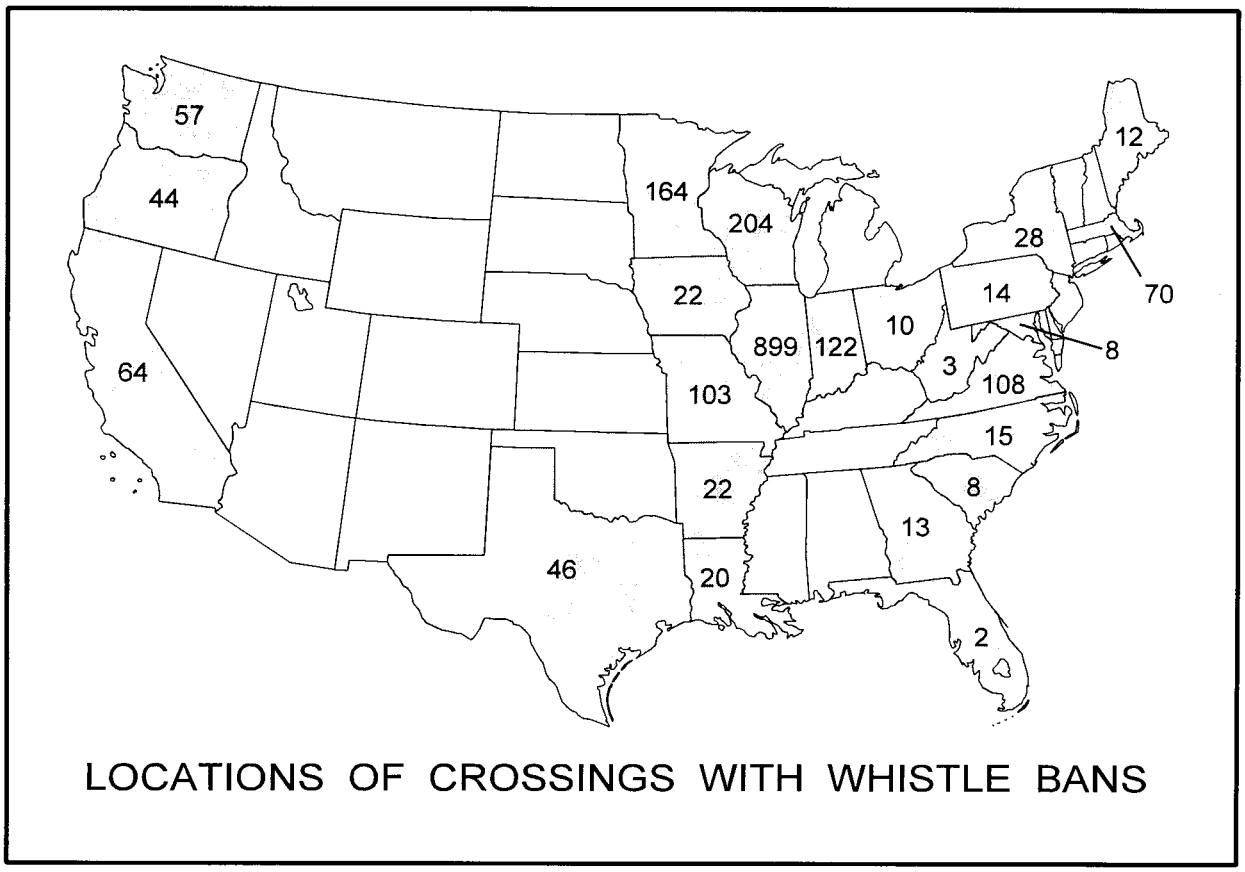

BILLING CODE 4910–06–C

FRA also refined its procedure by conducting separate analyses for three different categories of warning devices in place at the crossings (*e.g.,* automatic gates with flashing lights, flashing lights or other active devices without gates, and passive devices, such as ''crossbucks'' or other signs). In addition, FRA excluded from the analysis certain collisions where the sounding of the train horn would not have been a deterrent to the collisions. These included cases where there was no driver in the vehicle and collisions where the vehicle struck the side of the train beyond the fourth locomotive unit (or railcar). FRA also excluded events where pedestrians were struck. Pedestrians, compared to vehicle operators, have a greater opportunity to see and recognize an approaching train because they can look both ways from the edge of the crossing. They can also stop or reverse their direction more quickly than a motorist if they have second thoughts about crossing safely.

Data for the five-year time period from 1992 through 1996 was used for the updated analysis in place of the older data of the 1995 Nationwide Study. For the updated analysis, the collision rate for whistle ban crossings in each device category was compared to similar crossings in the national inventory using the ten range risk level method used in the original study.

The analysis showed that an average of 62 percent more collisions occurred at whistle ban crossings equipped with automatic gates and flashing lights than at similarly equipped crossings across the nation without bans. FRA will use this value as the increased risk associated with whistle bans instead of the 84 percent cited in the Nationwide Study of Train Whistle Bans released in April 1995. FRA believes that 62 percent is appropriate because it represents the elevated risk associated with crossings with automatic gates and flashing lights, which are the only category of crossings that will be eligible for ''quiet zones'' (except for certain crossings where train speeds do not exceed 15 miles per hour).

The updated analysis also indicated that whistle ban crossings without gates, but equipped with flashing light signals and/or other types of active warning devices, on average, experienced 119 percent more collisions than similarly equipped crossings without whistle bans. This finding made it clear that the train horn was highly effective in deterring collisions at non-gated crossings equipped only with flashing lights. The only exception to this finding was in the Chicago area where collisions were 16 percent less frequent. This is a puzzling anomaly. One possible explanation for this result is that more than 200 crossings (approximately one third of the crossings in Chicago) still included in the DOT/AAR National Inventory have in all likelihood been closed. They would continue to be included in the Inventory until reported closed by state or railroad officials. (At this time submission of grade crossing inventory data to FRA is voluntary on the part of states and railroads.) FRA believes this could contribute to the low collision count for Chicago area crossings without gates. Collisions cannot occur at crossings that have been closed. The retention of closed crossings in the inventory would, therefore, have the effect of incorrectly reducing the calculated collision rate for the Chicago area crossings.

In comparing the collision differences at crossings with gates and those without gates, FRA found that about 55 percent of the collisions at crossings with gates occurred when motorists deliberately drove around lowered gates. These collisions occurred 128 percent more often at crossings with

whistle bans than at other crossings. Another 18 percent of the collisions occurred while motorists were stopped on the crossings, probably waiting for vehicles ahead to move forward. There were smaller percentages of collisions involving stalled and abandoned vehicles. Suicides are not included in the collision counts. At crossings equipped with flashing signal lights and/or other active warning devices, but not gates, collisions occurred 119 percent more often at crossings subject to bans. A distinction should be made between the two circumstances. In the case of lowered gates, it is the motorist's decision to circumvent a physical barrier to take a clearly unsafe and unlawful action that can result in a collision. However, in the case of crossings with flashing light signals and/or other active devices, collisions may be more the result of a motorist's error in judgement rather than a deliberate violation of the state's motor vehicle laws. The ambiguity of flashing lights at crossings, which in other traffic control situations indicate that the motorist may proceed after stopping, when safe to do so, coupled with the difficulty of correctly judging the rate of approach of a large object such as a locomotive, may contribute to this phenomenon. FRA's collision data show that the added warning provided by the train horn is most critical at crossings without gates but which are equipped with other types of active warning devices.

By separating crossings according to the different categories of warning devices installed, FRA has been better able to identify the level at which locomotive horns increase safety at gated crossings and thus the level at which substitutes for the horn must be effective in order to fully compensate for the lack of a horn at those crossings.

For crossings with passive signs as the only type of warning device, the updated study indicated an average of 27 percent more collisions for crossings subject to whistle bans. This is the smallest difference identified between crossings with and without whistle bans. These crossings account for about one fourth of the crossings with whistle bans. Typically, they are the crossings with the lowest aggregate risk of collision because the installation of active warning devices usually follows a sequence where the highest risk crossings are equipped first. Two determinants of crossing risk are the amount of train traffic and highway traffic at a crossing. Often, crossings with only passive warning devices are located on seldom used sidings and industrial tracks and/or on highways with relatively low traffic levels. FRA believes this may be the reason that the difference in the numbers of collisions at whistle ban and non-ban crossings is so much less than for the other crossing categories. For crossings with passive warnings where trains do not exceed 15 miles per hour and where railroad personnel use flags to warn motorists of the approach of a train, whistle bans would entail a small risk of a collision resulting in an injury. However, at crossings with passive warnings and with higher train speeds, motorists would have no warning of the approach of a train if the train horn were banned. At such crossings, in order to ensure their safety, motorists must search for and recognize an approaching train, and then visually judge whether it is moving, and if so, estimate its arrival time at the crossing, all based only on visual information which may be impaired by hills, structures, vegetation, track curvature, road curvature as well as by sun angle, weather conditions, or darkness. The driver's decision to stop must be made at a point sufficiently in advance of reaching the crossing to accommodate the vehicle's stopping distance. If other vehicles are following, a sudden decision to stop could result in a rear-end collision with the vehicle being pushed into the path of the train. While FRA's data indicates that the smallest increase in collision frequency is associated with whistle bans at passive crossings, logic suggests that the banning of train horns at passive crossings could entail a much more significant safety risk per unit of exposure (vehicle crossings per train movement). Without the audible train horn warning, motorists would have no indication of the imminent arrival of a train beyond what they could determine visually. For motorists unfamiliar with whistle bans who encounter passive crossings where horns are not sounded, there would be an even greater risk.

The conclusions drawn from the 1995 Nationwide Study and its recent update have helped determine the requirements of this rule. FRA appreciates the assistance and cooperation of the many organizations and individuals who contributed to this effort by reporting whistle ban locations, compiling data, researching ordinances, and sharing their concerns, ideas, and opinions.

D. Congressional Action

After reviewing FRA's Florida study, Congress addressed the issue. On November 2, 1994, Congress passed the Swift Rail Development Act, Public Law 103–440 (''Act'') which added section 20153 to title 49 of the United States Code. The Act requires the use of locomotive horns at grade crossings, but gives FRA the authority to make reasonable exceptions. Section 20153 of title 49 of the United States Code states as follows:

''§ 20153. Audible warning at highway-rail grade crossings.

''(a) DEFINITIONS.—As used in this section—

''(1) The term ''highway-rail grade crossing'' includes any street or highway crossing over a line of railroad at grade;

''(2) The term ''locomotive horn'' refers to a train-borne audible warning device meeting standards specified by the Secretary of Transportation; and

''(3) The term ''supplementary safety measure'' refers to a safety system or procedure, provided by the appropriate traffic control authority or law enforcement authority responsible for safety at the highway-rail grade crossing, that is determined by the Secretary to be an effective substitute for the locomotive horn in the prevention of highway-rail casualties. A traffic control arrangement that prevents careless movement over the crossing (*e.g.,* as where adequate median barriers prevent movement around crossing gates extending over the full width of the lanes in the particular direction of travel), and that conforms to standards prescribed by the Secretary under this subsection, shall be deemed to constitute a supplementary safety measure. The following do not, individually or in combination, constitute supplementary safety measures within the meaning of this subsection: standard traffic control devices or arrangements such as reflectorized crossbucks, stop signs, flashing lights, flashing lights with gates that do not completely block travel over the line of railroad, or traffic signals.

''(b) REQUIREMENT.—The Secretary of Transportation shall prescribe regulations requiring that a locomotive horn shall be sounded while each train is approaching and entering upon each public highway-rail grade crossing.

''(c) EXCEPTION.—(1) In issuing such regulations, the Secretary may except from the requirement to sound the locomotive horn any categories of rail operations or categories of highway-rail grade crossings (by train speed or other factors specified by regulation)—

''(A) That the Secretary determines not to present a significant risk with respect to loss of life or serious personal injury;

''(B) For which use of the locomotive horn as a warning measure is impractical; or

''(C) For which, in the judgment of the Secretary, supplementary safety measures fully compensate for the

absence of the warning provided by the locomotive horn.

''(2) In order to provide for safety and the quiet of communities affected by train operations, the Secretary may specify in such regulations that any supplementary safety measures must be applied to all highway-rail grade crossings within a specified distance along the railroad in order to be excepted from the requirement of this section.

''(d) APPLICATION FOR WAIVER OR EXEMPTION.—Notwithstanding any other provision of this subchapter, the Secretary may not entertain an application for waiver or exemption of the regulations issued under this section unless such application shall have been submitted jointly by the railroad carrier owning, or controlling operations over, the crossing and by the appropriate traffic control authority or law enforcement authority. The Secretary shall not grant any such application unless, in the judgment of the Secretary, the application demonstrates that the safety of highway users will not be diminished.

''(e) DEVELOPMENT OF SUPPLEMENTARY SAFETY MEASURES.—(1) In order to promote the quiet of communities affected by rail operations and the development of innovative safety measures at highway-rail grade crossings, the Secretary may, in connection with demonstration of proposed new supplementary safety measures, order railroad carriers operating over one or more crossings to cease temporarily the sounding of locomotive horns at such crossings. Any such measures shall have been subject to testing and evaluation and deemed necessary by the Secretary prior to actual use in lieu of the locomotive horn.

''(2) The Secretary may include in regulations issued under this subsection special procedures for approval of new supplementary safety measures meeting the requirements of subsection (c)(1) of this section following successful demonstration of those measures.

''(f) SPECIFIC RULES.—The Secretary may, by regulation, provide that the following crossings over railroad lines shall be subject, in whole or in part, to the regulations required under this section:

''(1) Private highway-rail grade crossings.

''(2) Pedestrian crossings.

''(3) Crossings utilized primarily by nonmotorized vehicles and other special vehicles.

''(g) ISSUANCE.—The Secretary shall issue regulations required by this section pertaining to categories of highway-rail grade crossings that in the judgment of the Secretary pose the greatest safety hazard to rail and highway users not later than 24 months following the date of enactment of this section. The Secretary shall issue regulations pertaining to any other categories of crossings not later than 48 months following the date of enactment of this section.

''(h) IMPACT OF REGULATIONS.—The Secretary shall include in regulations prescribed under this section a concise statement of the impact of such regulations with respect to the operation of section 20106 of this title (national uniformity of regulation).

''(i) REGULATIONS.—In issuing regulations under this section, the Secretary—

''(1) Shall take into account the interest of communities that—

(A) Have in effect restrictions on the sounding of a locomotive horn at highway-rail grade crossings; or

(B) Have not been subject to the routine (as defined by the Secretary) sounding of a locomotive horn at highway-rail grade crossings;

''(2) Shall work in partnership with affected communities to provide technical assistance and shall provide a reasonable amount of time for local communities to install supplementary safety measures, taking into account local safety initiatives (such as public awareness initiatives and highway-rail grade crossing traffic law enforcement programs) subject to such terms and conditions as the Secretary deems necessary, to protect public safety; and

''(3) May waive (in whole or in part) any requirement of this section (other than a requirement of this subsection or subsection (j)) that the Secretary determines is not likely to contribute significantly to public safety.

''(j) EFFECTIVE DATE OF REGULATIONS.—Any regulations under this section shall not take effect before the 365th day following the date of publication of the final rule.'' The last two subsections of section 20153 were added on October 9, 1996 when section 20153 was amended by Public Law 104–264.

E. Rulemaking

When conducting a rulemaking, FRA must follow the Administrative Procedure Act (5 U.S.C. 553 *et seq.*) (APA). The APA generally requires that FRA allow all interested parties to review and comment on any proposed rule. Thus, by this notice, FRA is providing the public an opportunity to study the proposed rule and comment on it. Based on comments and testimony provided in response to this notice, FRA will, after the close of the comment period, determine what action to take.

There are two ways for you to share with FRA your opinions, experience or information about locomotive horns. First, the FRA can receive letters and other written remarks or reports. FRA places all of these comments in one place, the rulemaking docket. Please include the docket number on all comments submitted in response to this notice. The docket number for this rulemaking is ''Docket Number FRA–1999–6439.'' All written comments are placed in the docket, including scientific and technical reports on which FRA substantially relied when preparing the proposed rule. For example, the docket for this rulemaking includes, among many documents, copies of FRA's Florida and nationwide whistle ban studies. The public is free to inspect the rulemaking docket during regular business hours at the address listed above. Additionally, all documents in the docket are now available online at http://dms.dot.gov.

The second way to make a comment on this rulemaking is to attend one of the scheduled public hearings. The hearings will provide interested parties an opportunity for an oral presentation. FRA will have a court reporter record each public hearing and will place a copy of the transcript of each hearing into the docket. FRA will review all written comments and testimony provided in the public hearings.

F. Comments Received by FRA

Because of the great interest in this subject throughout various areas of the country, FRA has been involved in an extensive outreach program to inform those communities which presently have whistle bans of one type or another in effect. FRA staff has attended a large number of meetings with local officials and citizens. FRA has also held a number of public meetings to discuss the issues and to receive information from the public. FRA broke from tradition and established a public docket before formal initiation of rulemaking proceedings in order to enable citizens and local officials to comment on how FRA might implement the Act and to provide insight to FRA. Establishment of the docket also enabled members of the public to learn what other interested parties thought about this subject. The vast majority of commenters were in favor of quiet zones in their communities. A number were in favor of the use of four-quadrant gates at affected crossings, while one person favored the less expensive articulated gates rather than four-quadrant gates. Some commenters indicated how they

think the Act should be amended. Of course, new legislative enactments are beyond the scope of this rulemaking, and FRA must implement the law as it now reads.

Some commenters expressed the belief that state and localities were best suited to make the decisions regarding exemptions from the requirement that trains sound horns at crossings. A representative of the City of Portland, Maine wants the Act amended to empower the appropriate transportation agency for each state to grant local municipalities exemptions, since these officials ''are better able to properly assess the merits of any local community request for such a waiver.'' Examples of such exemptions that would be appropriate, according to this official, would be cases where the crossings are adequately protected, train speeds are no more than 30 miles per hour and vehicle speed is 35 miles per hour or less. This commenter also stated that all crossings which are flagged by the train crews or where the train crew activates the crossing signal should be exempt from locomotive horns. Similarly, the Maine Department of Transportation believes that ''the State's regulatory process should be retained under any rules proposed * * *.'' The state requests that an exception under the Act be granted to those states which, either by an adjudicatory process or by rulemaking, permit train whistling to be discontinued.

The Chairman of the Board of Selectmen of the town of Acton, Massachusetts expressed strong opposition to the return of locomotive horns, and urged that FRA issue regulations ''so that each state could make its own determination as to the appropriate level of safety devices needed at each grade crossing.'' Similarly, a Wisconsin state representative requests that FRA ''empower states with the available expertise, such as Wisconsin's Office of the Commissioner of Railroads, to make their own rules. The states, better than the federal government, know the local conditions and have contact with the citizens who are represented directly in the State Legislature.'' This same legislator closed his comment by stating that ''I hope this letter reaches a human being who will read it and I hope it will go to a deliberative body who truly cares about the true needs of our citizens.'' FRA wishes to assure the writer, and the public generally, that indeed we do care about the needs of our citizens. In addition to the citizens who may be disturbed by locomotive horns, we are concerned about the safety of the driver of a car at a grade crossing, the driver's innocent passengers, members of train crews, as well as nearby residents who may be injured by collisions at crossings. The intent of this rule is to help provide for safe grade crossings without unduly burdening nearby residents.

A number of commenters felt that costs associated with alternative safety measures should be borne by parties other than the local or state government. A Massachusetts state senator stated that FRA should require the railroad to assume the costs associated with two crossings in his town. An organization of bed and breakfast owners in Vicksburg, Mississippi objected to what they described as ''intense noise'' from local trains. The group urged that FRA ''adopt a liberal policy permitting alternative grade crossing safety devices that would eliminate the need for the train horns.'' The group added, ''Of course, a financial assistance program to accomplish these alternatives is also essential.'' The Town of Ashland, Massachusetts argues that the railroad's cost of doing business should not be transferred to the town and taxpayers. ''Responsibility for this [measures to minimize disruption caused by these crossings] must be put squarely on the operators of the railroad. * * *''

Two commenters have raised the issue as to whether rural and urban areas should be treated in the same manner. One commenter stated that ''the Act no doubt should apply in full force to rural sections of America, but such provisions are quite out of line with the logical treatment of those areas of the land where the population is far heavier.'' Another commenter urged FRA to establish maximum decibel levels for locomotive horns which ''should be considerably lower in urban areas than in sparsely populated rural areas.''

Various commenters have proposed that specific provisions be contained in FRA's regulations. One commenter proposes that the regulation be waived for any crossing within 300 yards of a residence.

Many commenters expressed the view that many communities with present whistle bans have excellent safety records and therefore sounding of locomotive horns will only disrupt residents' lives with no real impact on safety. The city attorney for Bellevue, Iowa indicated that the railroad tracks run down the center of a main street in the city. He points out that slow train speed, locomotives equipped with ditch lights, stop signs at crossings, and the sounding of the locomotive bell all have contributed to only 5 collisions, one injury, and no fatalities in almost 7 years of train traffic averaging 8 trains a day. He claims that locomotive horns along the 15 crossings in town will have a minimal affect on safety, but will have a maximum effect on the quality of life of most of Bellevue's residents. Similarly, the mayor of Batavia, Illinois indicated that because the city has a good rail safety record, the ''whistle blowing standards that have been set forth in this Act are not necessitated and would cause unnecessary discomfort to our constituency.'' These commenters, along with others, recommend that a community's safety record be a factor in determining whether locomotive horns need to be sounded.

FRA has received many comments from Chicago area municipal groups representing suburban areas in which, for the most part, locomotive horns are not routinely sounded. The Chicago Area Transportation Study conducted by the Council of Mayors states that it represents over 200 cities and villages with over 4 million residents outside of Chicago. The study authors recommended that FRA's regulations include provisions for: (1) Accident reduction programs tailored to the magnitude and type of accident experience at individual crossings; (2) recognition of the effectiveness of enhanced enforcement of existing rail safety laws and public education programs; (3) use of less costly physical barriers such as flexible median delineator tubes and articulated railroad crossing gates; (4) use of strobe lights and more visible paint schemes on locomotives and cab car fronts and reflective delineators on the sides of railroad cars; and (5) exemptions from locomotive horns if a community or subregion's accident experience is under a specified threshold. These proposals were echoed by the West Central Municipal Conference and the West Suburban Mass Transit District, both of suburban Chicago.

Another association of suburban Chicago local governments, the DuPage [County] Mayors and Managers Conference, emphasized the large number of rail lines, large number of daily train movements and high volume of pedestrian and motor vehicle movements over area grade crossings. The Conference pointed out that the citizens have grown to rely on locomotive horns in cases of impending danger, not for warning of the routine approach of a train. The Conference indicates a downward trend in grade crossing collisions over the past ten years, and attributes a significant portion of that decline to stepped-up law enforcement efforts by municipalities and more focused public

awareness programs. Rather than providing for engineering improvements to decrease collisions at crossings, the Conference recommends that a community or subregion be exempt from both locomotive horn soundings and the requirement to install supplementary safety measures if the area's collision experience is under a specified threshold. The Conference states support for aggressive enforcement and education programs as well as less costly physical barriers such as flexible median delineator tube. The Conference is also in favor of a state-level oversight mechanism, rather than federal oversight, ''given the already close working relationship that must exist between state highway and rail-related agencies.''

FRA particularly appreciates the efforts of Members of Congress who have invited FRA to their districts and have provided citizens and local officials with the opportunity to express their views on this rulemaking process. These exchanges, and others conducted directly through FRA's regional crossing managers, have been very valuable in identifying the need for flexibility in preparing the proposed rule.

In the Chicago region, Rep. Henry Hyde of Illinois chaired a public meeting attended by the FRA Administrator, with participation by other Members of Congress and a number of public witnesses. Rep. William Lipinski also convened a district meeting with the Administrator in attendance that permitted a full airing of community concerns. These Chicago-area forums called attention to the large number of commuter and freight trains that would be required to sound horns along rail lines where many of the engineering concepts embodied in E.O. 15 would be difficult or impossible to implement, without substantial revision. Representatives from DuPage County proposed the concept of aggregating and abating risk by corridor rather than by crossing, a concept embodied in this proposal. Concerns were raised by an association of local governments regarding the identification of crossings currently impacted by informal bans on train horns, and those concerns led to an extensive data collection effort to complete the identification of impacted communities and re-analyze the accident data in light of this new information. Although most witnesses opposed any rulemaking in this area, a DuPage County citizen group formed to promote highway-rail crossing safety supported the use of train horns.

Senior FRA staff members also joined Rep. Tim Roemer and officials from the State Department of Transportation in meetings with city officials and citizens from South Bend and Mishawaka, Indiana, to consider the implications of the forthcoming rulemaking on those communities, where whistle bans are in place over most crossings. Concern was expressed that residents along the railroad would have to ''pay the price'' for violation of warning systems by individual motorists. Serious crashes had occurred along the Conrail line that bisects these cities, and options were reviewed for making improvements that might offset the train horn. Cost was identified as a critical issue for the local governments.

The office of Senator Edward Kennedy convened a meeting involving FRA senior staff early in the agency's outreach effort that was attended by several elected officials, who expressed concern over the prospective rulemaking. Senior FRA staff members attended separate district meetings in Massachusetts convened by Rep. Martin Meehan and Rep. John Tierney. These congressional districts are significantly impacted by scheduled commuter service. Residents and officials called attention to the generally good safety record at local crossings and the incompatibility of train horns with the quiet of their communities. Concern was also expressed regarding the public health effects of loud train horns and the cost of supplementary safety measures.

Citizens and officials involved in several of these contacts expressed concern that the proposed rule would impose ''unfunded mandates'' on local communities. Without exception, the offices of Members of Congress and Senators contacting FRA in this proceeding have expressed that FRA seek flexible solutions and allow ample time for communities with existing whistle bans to adjust to any new requirements.

Additional issues raised in the course of these contacts, briefings for congressional staff, and other communications are set forth elsewhere in this preamble, including the section-by-section analysis.

In-Vehicle Warning Systems

FRA periodically receives suggestions from the public that electronic devices should be installed on motor vehicles to warn of approaching trains, thereby eliminating the need for locomotive horns. Over the long term, systems may be deployed that permit broadcast notifications to motorists warning of the passage of trains over highway-rail crossings. If these systems are sufficiently reliable and use is widespread, sounding of the train horn may be discontinued. This type of warning may be achieved through integration of Intelligent Transportation Systems (ITS) deployed for highway use, together with elements of Positive Train Control (PTC) systems that will govern train movements and provide accurate data concerning location, direction of movement and velocity (or that may function on the train to notify information systems through location-specific interfaces). Such systems will not be widely deployed for some time, but a clearly delineated ''user service'' (Number 30) has been established within the architecture of the Intelligent Transportation Systems program as a venue for research and planning. FRA's PTC Working Group (a part of the Railroad Safety Advisory Committee) has also identified this as a possible auxiliary function for PTC.

In the interim, FRA expects progress toward in-vehicle warning for priority vehicles such as school buses, emergency vehicles and the like. Concepts for ''proximity warning'' have been evaluated with Department of Transportation funding at the Transportation Technology Center, and field operational tests were conducted in 1998. The State of Illinois is demonstrating a priority vehicle system in the Chicago metropolitan area. A commercial vendor is offering a radar system for private motor vehicles that is designed to detect a train's approach, assuming the lead locomotive to be equipped with a radar unit. FRA will continue to work with the Federal Highway Administration and other transportation bodies to identify promising strategies for priority vehicle warning system.

Consideration has also been given to transmitting train proximity warnings through new generations of car radios equipped to receive such transmissions, sound audible warnings, and display text messages. This Emergency Radio Data System (ERDS) is used in several European countries and is proposed for demonstration in the U.S. as part of ITS development. This approach would use consumer electronics as the in-vehicle platform.

Successful in-vehicle systems will need to meet several criteria in order to be candidates for wide-scale application to all passenger motor vehicles: 1. Systems must be fail-safe; or they must be shown to be so highly reliable that their utility as a warning system exceeds the loss of safety associated with inappropriate reliance on the system when in the failure mode. 2. Systems must be affordable for the vehicle owner, as well as the railroad charged

with equipping locomotives. 3. False alarms must be infrequent, or the system will lack credibility and may be subject to being defeated (if false alarms produce annoyance).

Clearly, before train horns could be silenced, essentially all trains and motor vehicles would need to be equipped with the in-vehicle warning system. With respect to private motor vehicles, such a feature is most likely to be implemented as part of a multi-function ITS package. Although Intelligent Transportation Systems offer significant promise for enhancing rail safety and perhaps entirely replacing the function currently served by the train horn, this alternative is not available as a realistic option on a community-by-community basis at the present time.

G. Proposed Rule

FRA has reviewed information obtained through our ''outreach'' efforts, comments submitted to the public docket and other unsolicited comments sent to the agency by concerned citizens, communities, and legislators. FRA has considered that information and has attempted, within the statutory framework established by Congress, to accommodate many of the legitimate concerns expressed. We anticipate that many constructive comments will result from public analysis of this proposal and that the proposed rule may be changed as a result of the public input. In drafting this proposed rule, FRA has attempted to reconcile Congress' two, somewhat conflicting, directives. The first directive, which is unambiguous, is that ''The Secretary of Transportation shall prescribe regulations requiring that a locomotive horn shall be sounded while each train is approaching and entering upon each public highway-rail grade crossing.'' This directive does not allow any discretion as to issuance of the regulation requiring the sounding of horns. The Secretary, and by delegation, the Federal Railroad Administrator, must require that horns are sounded at every public grade crossing. The second directive, however, is entirely discretionary. The Secretary ''may'' exempt from the requirement to sound the locomotive horn certain categories of rail operations or categories of crossings. While exceptions may be crafted, they are not required. This proposed rule, which does contain provisions for such exceptions, is essentially a rule which reduces the impact of the Congressional locomotive horn mandate. It provides communities with the ability to reduce the impact of locomotive horns within their jurisdictions.

The basis of this proposed rule is the determination by Congress that locomotive horns provide a measure of safety at highway-rail grade crossings beyond that provided by the conventional stationary grade crossing warning systems of crossing gates and flashing lights. Because of the added safety benefits afforded by locomotive horns, they must be sounded unless an effective substitute is provided. The proposed rule is crafted to detail when and how locomotive horns must be sounded. For the first time, FRA proposes limits to the sound level of locomotive horns to provide some relief to the surrounding population while still ensuring that the sound level is high enough to provide the required warning to the motorist.

The rule requires that horns be sounded at every public highway-rail crossing. FRA has provided an exception to this requirement for crossings within a designated ''quiet zone.'' If all crossings within that zone are equipped with approved supplementary safety measures in addition to conventional gates and flashing lights, locomotive horns will not need to be sounded (subject to the rule requirements). The rule further provides that if a community wishes to establish a quiet zone, but it can not, for some reason, fully comply with the rule's requirements for supplementary safety measures at every crossing within the zone, it may apply to the FRA with its proposed program of safety measures. FRA will evaluate the community proposal to determine if the safety measures will compensate for the lack of a locomotive horn. Finally, the rule provides a very limited exception to the requirement that supplementary or alternative safety measures must be in place if locomotive horns are to be silenced.

As required in section ''j'' of the Act, any regulations issued pursuant to the Act shall not take effect for one year following the date of publication of the final rule. As a result, the regulation's requirements to sound the locomotive horn (absent establishment of a quiet zone) will not be effective until one year after publication of the final rule. The one year period, in addition to the period between publication of this proposed rule and the final rule, will enable communities to assess options and plan for those actions deemed best for that particular community. FRA anticipates that during the one year between final rule publication and its effective date, communities will wish to initiate the administrative process involved in establishing quiet zones so that, if desired, they can have quiet zones in place on the anniversary of the rule publication. Therefore, FRA anticipates that for administrative purposes only, the final rule will have an effective date 60 days after publication. The final rule, of course, would not impose any requirement for the sounding of locomotive horns before one year after final rule publication. FRA requests comments on this proposal.

Section-By-Section Analysis

Section 229.129 Audible Warning Device

As noted earlier, FRA has a rule at, 49 CFR 229.129, which requires that each lead locomotive be provided with an audible warning device. That provision currently requires that the warning device produce a minimum sound level of 96 dB(A) at 100 feet forward of the locomotive in its direction of travel. Over the past few years FRA has received many complaints regarding the loudness of various locomotive horns. While the regulation appropriately required a minimum sound level in order to assure the horn's effectiveness, it did not restrict the maximum sound level of a locomotive horn. This section would correct that situation and would establish a maximum sound level that an audible warning device may produce. (Proposed language for this section can be found at the end of this document following proposed regulatory language for new Part 222.) This section would also revise the directionality requirements of the regulation. It would establish a maximum sound level to the side of the locomotive in order to reduce the horn's effect on the surrounding community. FRA is faced with the task of balancing the need for an effective warning to the motorist while minimizing the horn's intrusion into the surrounding community.

There are a number of factors which influence the ability of a motorist to hear a train horn. These include: The sound spectrum level (intensity at each frequency) of the horn, distance from the horn, ambient noise spectrum level in the motor vehicle, the acoustic insertion loss of the vehicle (sound reflected and absorbed by the vehicle which does not enter the vehicle interior), and the characteristics of the grade crossing. The human ear is only sensitive to sounds between 20 and 20,000 hertz (Hz), and is most sensitive in the range between 500 and 5,000 Hz. Hearing sensitivity declines sharply for higher and lower frequencies. As distance from a sound source increases, the effective intensity of the sound

decreases by approximately 7.5 dB for every doubling of the distance. For instance, if the calibrated intensity of the train horn at 100 feet is 100 dB(A), then at 200 feet it is 92.5 dB(A). Ambient noise in the vehicle can reduce the motorist's ability to hear the train horn through masking. Masking would be strongest when the frequency of the noise is at the same frequency of the train horn. In general, this means that the spectrum level of the horn inside the vehicle must exceed that of ambient noise for the horn to be heard. Determining the required minimum level and the required maximum level for the train horn requires a balance between effectiveness as a safety warning and mitigation of undesirable community noise impacts. In the past, some mitigation of noise impacts has occurred through exercise of discretion by locomotive engineers who have sought to limit community impacts by ''going easy'' on the air horn control. A Federal mandate to use this warning device will inevitably change accepted practice. Although engineers have undoubtedly sought to exercise good judgment in this regard, whether this exercise of discretion has been uniformly benign is not known and not determinable using existing data.

Recent installation on some newer locomotives of electronic controls for operation of horns may have resulted in the maximum intended sound levels routinely under all circumstances. Again, whether this automation of the horn function has improved safety cannot be determined from available data. Although highway-rail crossing safety has continued to improve during this period despite increased exposure, many other variables (such as improved education and awareness programs, strengthened law enforcement, equipping of locomotives with alerting lights, installation of warning devices at high-risk crossings, and crossing closures) are likely responsible for most of this improvement.

Even the maximum sound level available from the horn has varied widely among segments of the locomotive and cab car fleets. FRA is aware that a major commuter authority sets the output of the horns on at least a portion of its commuter equipment at the minimum allowed (96 dB(A) at 100 feet, ''plus or minus'' 4 dB(A) for actual field testing). By contrast, many freight locomotives have horns that deliver as much as 114 dB(A) at 100 feet in front of the locomotive. Locomotive horns that proved highly effective in the warm climate through which the Florida East Coast Railway operates (where many motorists may have driven with open vehicle windows in mild nighttime hours) have apparently been set at about 104 dB(A), but it may not be reasonable to expect similar effectiveness at this level under other conditions. FRA is particularly concerned that railroads not be required to reduce horn levels across the board to accommodate local community sensitivities, if that will result in reduced horn effectiveness at the majority of crossings that are not located in tightly-developed noise-sensitive areas.

The Volpe National Transportation Systems Center (Volpe Center) has been studying train horn issues for FRA in support of this rulemaking. Based upon field data collection and analysis the Volpe Center has suggested that, for peak safety effectiveness, train horns should be set at approximately 111–114 dB(A). This range takes into consideration the need to provide adequate advance warning to as many motorists as practical.

This would include a high percentage of motorists stopped, or approaching at low speed, crossings with automated warning devices. Behavioral science suggests that these motorists may have an expectation that a train is nearing the crossing. Under these circumstances, the train horn can be very effective because the motorist is listening for an auditory cue. Even if the ''insertion loss'' associated with closed vehicle windows and sound insulation is in the range of 18 to 45 dB(A), and despite some degree of background noise associated with the vehicle's engine and other interfering noise, the train horn should add significant value in these cases. Preliminary analysis by the Volpe Center appears to indicate that under most circumstances of crossing configuration and train speed, a train horn set in the range of 104–105 dB(A) at 100 feet in front of the locomotive may provide a sufficient auditory cue to alert the motorist who pauses at a crossing with active warning systems that the arrival of the train is imminent.

The greater challenge is presented by passively signed crossings. Although FRA does not propose to allow banning of train horn use at passively signed crossings and crossings with only flashing lights, the train horn will nevertheless remain an important warning system at those crossings. Reducing the allowed sound level by setting a maximum in this proceeding could thus lead to a net reduction in safety. At passively signed crossings, overall risk to the public is generally less because of fewer conflicting movements of trains and vehicles. However, the risk to any given motorist seeking to use the crossing during the period a train is approaching is much higher. Motorists seeking to act wisely by yielding to the train are entitled to fair warning of the train's approach. Even with all lights (headlight and ''ditch'' lights) functioning, a train is sometimes difficult to pick out against the visual background. Further, due to such factors as buildings, mature stands of trees, track curvature, and the angle of motorists' approach, sight distances at many crossings do not permit a long preview of the train's approach. A sufficiently loud auditory warning will tell the motorist that a train is approaching and from what direction (within about 10 degrees for a person of good hearing in both ears under optimum circumstances). This will give the motorist more opportunity to sight the oncoming train at the first opportunity, evaluate its rate of approach, and make a safe decision.

The challenge at passively signed crossings is to provide warning sufficiently early to affect motorist behavior. This is more difficult, because the motorist approaching the crossing in most cases (except where an enforced STOP sign is present) will not stop and may not slow down except as required by unevenness of the road surface. The motorist's decision point is thus farther away from the crossing and (in the typical case) from the train horn. According to the Volpe Center, a vehicle traveling at 30 miles per hour may have interior noise level in the range of 21 to 63 dB(A) from its engine and typical road noise. A loud sound system playing music or other programming will add to this background noise. Depending upon the train horn harmonics, the Volpe Center estimates that a horn sound level in the range of 111–114 dB(A) may be sufficient to warn most motorists at passive crossings for all conventional train speeds, despite the fact that the horn sound as inserted into the vehicle must exceed the background noise by a larger margin than at crossings with automated warning devices in order to seize the motorists' attention. However, reducing the train horn level from that range is expected to result in a rather rapid fall-off of effectiveness at passively signed crossings. The result will be that the horn will be effective only at lower combined closing speeds for the vehicle and train approaching the crossing, leaving motorists without effective warning under a larger number of real-life scenarios.

Community impacts are also highly sensitive to train horn levels—but in the opposite direction. Volpe Center calculations suggest, for instance, that just reducing train horn levels from 114

dB(A) to 111 dB(A) would almost double the number of train movements permitted before a common 24-hour measure of acceptable community noise levels (Ldn=65 dB(A)) is exceeded at any given distance from the railroad right-of-way. This measure of acceptable community noise levels was developed to evaluate noise from frequent transportation movements (aircraft overflights, transit vehicle passes), in connection with public investments in new transportation facilities and equipment. FRA has grave reservations concerning whether such a standard could be appropriately applied to evaluate the acceptability of short-duration warning sounds necessary for safety in an existing transportation system. Train horn noise has been excepted from Environmental Protection Administration limits on railroad noise emissions because of these kinds of differences. Nevertheless, FRA recognizes the importance of imposing no greater noise impacts on local communities than may be necessary for safety. Accordingly, as discussed below FRA will be conducting an environmental assessment in parallel with this rulemaking and utilizing the results of that effort in preparing a final rule.

FRA does not propose to conclude this rulemaking without setting a maximum level for the train horn. Although FRA is skeptical, based on noise readings taken in locomotive cabs, that train horns have been set at levels exceeding approximately 114 dB(A)—a level that does not appear excessive given the safety needs involved—FRA does recognize that the mandate to use the horn implicates a responsibility to set a maximum level. For purposes of this proposed rule, therefore, FRA is proposing two specific options, with a third concept suggested for comment. Under both options the minimum level would remain at 96 dB(A). However, in order to avoid significant loss of warning effectiveness, field tests would not include the current ''plus or minus'' allowance for error. Tests in the field would be required to demonstrate a sound level of at least 96 dB(A) at 100 feet in front of the locomotive and to comply with a specified maximum level. To avoid non-representative results caused by environmental extremes, testing would be required to be conducted within a range of temperature of 36 and 95 degrees Fahrenheit with relative humidity between 20 and 90 percent. Both temperature and humidity affect the propagation of sound waves.

Options for maximum level. Under the first option, the maximum permissible train horn sound level would not exceed 104 dB(A), which is believed to be sufficient in most circumstances to provide adequate warning at crossings using automated warning devices (where the motorist makes a decision while at rest near the crossing, expecting the train to arrive). Under the second option, the train horn could be set at up to 111 dB(A), which is in the range where the horn is believed to be effective under many circumstances at passively signed crossings (where the motor vehicle is in motion at the decision point and the motorist have been provided no contemporaneous reason to expect to see a train). As soon as they are completed, FRA will place in the docket Volpe Center studies providing information pertinent to this analysis.

Variable level option. FRA notes that one possible approach to addressing this issue is a variable horn level. Under this approach, train horns would be required to be capable of sounding within a low range (*e.g.,* 96–104 dB(A)) approaching any crossing with active warning devices and within a higher range (*e.g.,* 104–111 dB(A)) at any crossing not equipped with automated warning systems. FRA notes concern that this could place an additional burden on the locomotive engineer and that sounding the horn in this pattern would not be feasible where crossings are closely spaced and are not uniformly treated with automated warning devices. Accordingly, at a minimum simplified procedures requiring the engineer to take the safe course would be required in these circumstances. Commenters are asked to evaluate this approach as a third option.

Directionality. Under current regulations, some locomotive horns have been placed near the center of the locomotive in order to reduce crew noise exposure. Although providing at least 96 dB(A) at 100 feet in front of the locomotive, these arrangements have sometimes led to higher sound levels at right angles to the locomotive than to the front or rear. This has resulted from obstructions such as diesel exhaust stacks and air conditioning units causing the horn noise to disperse. FRA believes that this approach is not necessary for crew safety and is inconsistent with the responsibility of the transportation company to limit community noise impacts. Accordingly, the proposed rule would require that the sound levels at 90 degrees and 100 feet from the center of the locomotive not exceed the value 100 feet in front of the locomotive. FRA also requests comment whether this community exposure should be measured at 90 degrees from the horn placement location, rather than the center of the locomotive.

Crew safety concerns. FRA does not expect locomotive crew exposure to be a limiting factor in this rulemaking. In a 1996 Report to Congress entitled Locomotive Crashworthiness and Cab Working Conditions, FRA described the results of a survey of cab noise levels and the literature dealing with occupational hearing loss. The report found noise exposure for most locomotive assignments to fall within acceptable levels and noted that cabs of new locomotives are exceptionally quiet because they provide an environment that is isolated from the locomotive structure and temperature controlled (permitting windows to remain closed). However, the report identified the need to improve FRA's noise exposure standard for locomotive cabs and to adopt a hearing conservation approach to this area of occupational safety and health. A working group of the Railroad Safety Advisory Committee is currently pursuing these improvements, and comments from within that working group have prompted the suggestion noted above for a variable sound level for the horn. Depending upon the circumstances under which the low sound level might be selected by the locomotive engineer, having this option available could reduce the overall noise dose to which crew members are subjected during any duty tour. In any event, FRA expects that continued improvements in locomotive design, use of personal hearing protection, and other initiatives now under study should permit further reduction in occupational noise exposure over the coming years.

Costs. FRA recognizes that varying the loudness of the locomotive horn by adapting to a new maximum level, providing for a variable level, or relocating a horn to avoid excessive levels to the ''field'' could result in costs to the railroads. FRA requests comment on the extent of the costs involved and the optimum means of achieving any necessary retrofit of locomotives, including the period that should be allowed to accomplish this work.

Section 222.3 Application

The requirements contained in this part apply to all railroads, both passenger and freight, which operate on the general railroad system of transportation, *i.e.,* the network of standard gage railroads over which the interchange of goods and passengers throughout the nation is possible. This part does not apply to exclusively freight railroads that operate only on track which is not part of the general

system of transportation. This part also does not apply to rapid transit operations within an urban area that are not connected to the general railroad system of transportation.

In other recent rulemakings, FRA has discussed the basis for its exercise of jurisdiction over ''scenic'' or ''tourist'' railroads. FRA has declined to exercise jurisdiction over insular scenic or tourist railroads *i.e.,* passenger railroads operating inside an installation so that the operations are limited to a separate enclave in such a way that there is no reasonable expectation that the safety of the public—except a business guest, licensee of the railroad or an affiliated entity, or a trespasser—would be affected the operation. FRA has determined that the presence of certain characteristics will prevent the railroad from being considered insular and thus will result in FRA's exercise of jurisdiction over that railroad. The presence of one of the following characteristics will trigger the assertion of FRA regulatory jurisdiction: (1) A public highway-rail crossing that is in use; (2) an at-grade rail crossing that is in use; (3) a bridge over a public road or waters used for commercial navigation; or (4) a common corridor with a railroad, *i.e.,* its operations are within 30 feet of those of any railroad. Inasmuch as this proposed rule is directed at locomotive horn use at public highway-rail grade crossings, the rule will thus apply to every tourist or scenic railroad crossing a public highway rail grade crossing, whether or not the railroad is part of the general railroad system of transportation. The language of this proposed section reflects that result.

FRA recognizes that additional public grade crossings may be found on plant railroads and freight railroads which are not part of the general railroad system of transportation. Operations on these railroads are typically low speed with small numbers of rail cars permitting relatively short stopping distances. Additionally, these operations typically also involve roadway crossings with relatively low speed vehicular traffic. These reasons, together with the historical basis for not asserting jurisdiction in these cases, leads FRA to propose not to exercise jurisdiction over public and private crossings at such plant and private railroads. FRA does, of course, retain the statutory right to assert jurisdiction in this area and will do so if circumstances so warrant. As in all aspects of this proposed rule, FRA invites comments on the jurisdictional determinations proposed in this notice.

Section (f) of the Act explicitly gives discretion to the Secretary on the question of whether to subject private highway-rail crossings, pedestrian crossings, and crossings utilized primarily by nonmotorized vehicles and other special vehicles to this regulation. At this time, FRA is proposing to exercise its jurisdiction in a limited manner regarding these crossings.

Although some private crossings experience heavy rail and motor vehicle use, we do not have sufficient information as to present practices, the number and type of such diverse crossings, and the impacts of locomotive horns at such crossings. Thus, FRA will not at this time require that the locomotive horn be sounded at private highway-rail crossings. Whether horns must be sounded at such crossings will remain subject to state law (if any) and agreements between the railroad and the holder of crossing rights. FRA will, however, permit the establishment of quiet zones on rail line segments which include private crossings. To do otherwise would undermine a major purpose of the Act.

While we believe that, absent compensating warning or protective devices, sounding of locomotive horns provides a safer highway-rail crossing, it may be sufficient that the locomotive bell, rather than horn, be rung prior to entering a pedestrian or other non-highway crossing. At such crossings, pedestrians, horse-drawn vehicles, bicycles, and equestrians enter the crossing at a significantly slower speed than motor vehicles, are not enclosed as in an automobile or truck, and do not face the same distractions as those confronting motorists. FRA therefore proposes to decline to exercise jurisdiction over the use of locomotive horns at such crossings.

Section 222.5 Preemptive Effect

This section provides notice that pursuant to 49 U.S.C. 20106, issuance of these regulations preempts any State law, rule, regulation, or order covering the same subject matter, except a provision necessary to eliminate or reduce an essentially local safety hazard, that is not incompatible with Federal law or regulation and does not unreasonably burden interstate commerce. Accordingly, all existing local ordinances and state statutes relating to whistle bans or to the sounding of locomotive horns at public highway-rail crossings will be preempted by this regulation unless such ordinances or laws fall within the exception contained within 49 U.S.C. § 20106. This rule, however, does not confer authority on localities to establish quiet zones if state law does not otherwise permit such actions.

Section 222.7 Definitions

This proposed rule uses various terms which are not widely understood or which, for purposes of this rulemaking, have very specific definitions. This section defines the following terms:

''Barrier curb'' means a highway curb designed to discourage a motor vehicle from leaving the roadway. FRA proposes to define such curb as a curb more than six inches, measured from the surface of the roadway. As with mountable curbs and channelization devices, additional design requirements are left to the standard specifications used by the governmental entity constructing the engineering improvements.

''Channelization device'' means one of a continuous series of highly visible obstacles placed between opposing highway lanes designed to alert or guide traffic around an obstacle or to direct traffic in a particular direction. Channelization devices must be at least 2.5 feet high and placed a maximum of seven feet apart.

''Effectiveness rate'' means the effectiveness of a supplementary safety measure in reducing the probability of a collision at a highway-rail grade crossing. (Effectiveness is indicated by a number between zero and one which represents the reduction of the probability of a collision as a result of the installation of a supplementary safety measure when compared to the same crossing equipped with conventional automated warning systems of flashing lights, gates and bells. Zero effectiveness means that the supplementary safety measure provides no reduction in the probability of a collision (there is no effectiveness) while an effectiveness rating of one means that the supplementary safety measure is totally effective in reducing collisions. Measurements between zero and one reflect the percentage by which the supplementary safety measure reduces the probability of a collision. Thus, a supplementary safety measure with an effectiveness of .37 reduces the probability of a collision by 37 percent).

''Locomotive horn'' means a locomotive air horn, steam whistle, or similar audible warning device mounted on a locomotive or control cab car. The terms ''locomotive horn'', ''train whistle'', ''locomotive whistle'', and ''train horn'' are used interchangeably in the railroad industry. Specifications concerning audible warning devices on locomotives other than steam locomotives are contained in 49 CFR 229.129.

''Median'' means an ''island'' or the portion of a divided highway separating

the travel ways for traffic in opposite directions. A median is bounded by mountable or barrier curbs.

''Mountable curb'' means a highway curb designed to permit a motor vehicle to leave a roadway when required. It is a curb not more than six inches high measured from the roadway surface, with a well rounded top edge. Additional design specifications are determined by the standard traffic design specifications used by the governmental entity constructing the mountable curb.

''Positive train control territory'' means, for purposes of this part, a line of railroad on which railroad operations are governed by a train control system which is capable of determining the position of the train in relation to a highway-rail grade crossing and capable of computing the time of arrival of the train at the crossing which results in the automatic operation of the locomotive horn or the automatic prompting of the locomotive engineer such that the horn is sounded at a predetermined time prior to the locomotive's arrival at the crossing.

''Public highway-rail grade crossing'' means a location where a public highway, road, or street, including associated sidewalks or pathways, crosses one or more active railroad tracks at grade. Public highway-rail grade crossing, also referred to in this part as ''highway-rail crossings'', ''public grade crossing'', and ''grade crossing'', includes pedestrian walkways or other pathways when associated or part of a larger public highway, road or street crossing.

*''Quiet zone''*means a segment of a rail line within which is situated one or a number of consecutive highway-rail crossings at which locomotive horns are not routinely sounded.

''Railroad'' means any form of nonhighway ground transportation that runs on rails or electromagnetic guideways and any entity providing such transportation, including (i) Commuter or other short-haul railroad passenger service in a metropolitan or suburban area and commuter railroad service that was operated by the Consolidated Rail Corporation on January 1, 1979; and (ii) high speed ground transportation systems that connect metropolitan areas, without regard to whether those systems use new technologies not associated with traditional railroads; but does not include rapid transit operations in an urban area that are not connected to the general railroad system of transportation.

''Supplementary safety measure'' means a safety system or procedure established in accordance with this part which is provided by the appropriate traffic control authority or law enforcement authority and that is determined by the Administrator to be an effective substitute for the locomotive horn in the prevention of highway-rail casualties.

''Whistle board'' means a post or sign directed toward oncoming trains and bearing the letter ''W'' or equivalent symbol, erected at a distance from a grade crossing, which indicates to the locomotive engineer that the locomotive horn should be sounded beginning at that point.

Section 22.9 Penalties.

This provision provides civil penalties for violations of requirements of this regulation. Any person or railroad who violates or causes a violation is subject to a civil penalty of up to $11,000. Penalties may be assessed against individuals only for willful violations. Penalties of up to $22,000 can be assessed for violations caused by gross negligence, or where a pattern of violations has created a risk or was the cause of death or injury to any person. Maximum penalties of $11,000 and $22,000 are required by the Federal Civil Penalties Inflation Adjustment Act of 1990 (Pub.L. 101–410) (28 U.S.C. 2461 note), as amended by the Debt Collection Improvement Act of 1996 (Pub.L. 104–134, 110 Stat. 1321–373) which requires each agency to regularly adjust certain civil monetary penalties in an effort to maintain their remedial impact and promote compliance with the law.

Section 222.11 Petitions for Waivers

This section explains the process for requesting a waiver from a provision of this regulation. FRA has historically entertained waiver petitions from parties affected by an FRA regulation. In many instances, a regulation, or specific section of a regulation, while appropriate for the general regulated community, may be inappropriate when applied to a specific entity. Circumstances may make application of the regulation to the entity counter-productive; an extension of time to comply with a regulatory provision may be needed; or technological advancements may result in a portion of a regulation being inappropriate in a certain situation. In such instances, FRA may grant a waiver from its regulations. The rules governing FRA's waiver process are found in 49 CFR part 211. In summary, after a petition for a waiver is received by FRA, a notice of the waiver request is published in the **Federal Register**, an opportunity for public comment is provided, and an opportunity for a hearing is afforded the petitioning or other interested party. FRA, after reviewing information from the petitioning party and others, will grant or deny the petition. In certain circumstances, conditions may be imposed on the grant of a waiver if FRA concludes that the conditions are necessary to assure safety or if they are in the public interest. Because this regulation's affected constituency is broader than most of FRA's rail safety regulations, the waiver process is proposed to be somewhat different. Paragraphs (a) and (b) address the aspects which are different than FRA's customary waiver process. However, as paragraph (c) makes clear, once an application is made pursuant to either paragraph (a) or (b), FRA's normal waiver process, as specified in 49 CFR part 211, applies.

Paragraph (a) of this section addresses jointly submitted waiver petitions as specified by 49 U.S.C. 20153(d). Such a petition must be submitted by both the railroad whose tracks cross the highway and by the appropriate traffic control authority or law enforcement authority which has jurisdiction over the roadway crossing the railroad tracks. Although § 20153(d) requires that a joint application be made before a waiver of a provision of this regulation is granted, FRA, in paragraph (b), addresses the situation that may occur if the two parties can not reach agreement to file a joint petition. Section 20153(I)(3) gives the Secretary (and the Federal Railroad Administrator) the authority to waive in whole or part any requirement of § 20153 (with certain limited exceptions) if it is determined not to contribute significantly to public safety. FRA thus proposes to accept individually filed waiver applications (under certain conditions) as well as jointly filed applications. In an effort to encourage the traffic control authority and the railroad to agree on the substance of the waiver request, FRA proposes to require that the filing party specify the steps it has taken in an attempt to reach agreement with the other party. Additionally, the filing party must also provide the other party with a copy of the petition filed with the FRA.

It is clear that FRA prefers that petitions for waiver reflect the agreement of both entities controlling the two transportation modes at the crossing. If agreement is not possible, however, FRA will entertain a petition for waiver, but only after the two parties have attempted to reach an agreement on the petition.

Paragraph (c) provides that each petition for a waiver must be filed in the manner required by 49 CFR part 211.

Paragraph (d) provides that the Administrator may grant the waiver if the Administrator finds that it is in the public interest and that safety of highway and railroad uses will not be diminished. The Administrator may grant the waiver subject to any necessary conditions required to maintain public safety.

Subpart B—Use of Locomotive Horns

Section 222.21 When To Use Locomotive Horns

Paragraph (a) of this section would require that, except as provided elsewhere in this part, a locomotive horn on the lead locomotive of a train, or the lead locomotive of a consist of locomotives, or on an individual locomotive must be sounded when the locomotive or lead car is approaching and passes through each public highway-rail crossing. The locomotive horn must be sounded with a series of two long, one short, and one long horn blasts to signify the locomotive's approach to a crossing. FRA is adopting the industry standard as the required indicator of the approach of a locomotive to a crossing. This paragraph also requires that the horn be blown at the location required in paragraph (b) and that the horn warning be repeated or prolonged until the locomotive or train occupies the crossing.

The remaining paragraphs of this section address the specific location at which the sounding of the locomotive horn should be initiated. Establishment of this point is important both to provide adequate warning to the motorist and also to not unnecessarily impose the loud locomotive horn noise upon the surrounding community.

In drafting paragraph (b), FRA has attempted to address the fact that various states have long established requirements governing the location at which the horn must be sounded. Although those requirements would be preempted by this rule, rather than require immediate wholesale changes of whistle boards and timetable instructions, FRA is not proposing to immediately change the practical effects of present state requirements, if any. However, if a railroad changes the maximum authorized track speed on a line of railroad approaching a grade crossing, the location where the locomotive engineer is required to sound the horn (as indicated by whistle board or other method) must then be adjusted to reflect the change. The adjustment at that time would be made irrespective of conflicting state law.

This paragraph further establishes (within the ¼ mile limitation contained in paragraph (e)) the location at which the locomotive horn should be sounded. If using whistle boards, the railroad must place them at a distance from the crossing equal to the distance traveled by a train in 20 seconds while operating at the maximum speed allowed for any train operating on the track in that direction of movement. Because a fixed location for sounding of a horn results in differing periods of warning depending on the speed of the train or locomotive, the location of a whistle board must therefore be dependent on the fastest train operating over that track. If a railroad decreases the maximum authorized speed of trains operating over a crossing, the whistle board must be moved closer to the crossing in order to provide 20 seconds of warning. Conversely, if the maximum authorized speed is increased, then the whistle board must be placed farther from the crossing to maintain the 20 second warning time.

Paragraph (b) further provides that if the railroad uses methods or systems other than whistle boards to indicate when the horn should be sounded (such as positive train control systems), that system should ensure that the horn is sounded not less than 20, nor more than 24 seconds before the locomotive enters the grade crossing.

Paragraph (c) addresses the situation in which a state does not have on the effective date of this rule, a specific requirement for placement of whistle boards or specific distance requirements for the sounding of a horn. In that case, a railroad must take the same actions as are required when it adjusts maximum authorized speed in paragraph (b) above; if using whistle boards, the railroad must (within the ¼ mile limitation contained in paragraph (e)) place them at a distance from the crossing equal to the distance traveled by a train in 20 seconds while operating at the maximum speed allowed for any train operating on the track in that direction of movement. If the railroad uses methods or systems other than whistle boards to indicate when the horn should be sounded (such as positive train control systems), that system should ensure that the horn is sounded not less than 20 seconds, nor more than 24 seconds before the locomotive enters the grade crossing. These provisions, together with the definition of ''positive train control'' are based on the long held assumption that sounding the locomotive horn for 20 seconds before entering the grade crossing provides the optimum length of warning. Recent research, however, tends to indicate that 15 seconds of advance warning may be sufficient, especially where active warning systems are in place at the crossing. FRA requests comments on the proper length of time and under what circumstances locomotive horns should be sounded.

Paragraph (d) provides that each railroad, irrespective of state law to the contrary, must promptly adjust the location of each whistle board to reflect changes in maximum authorized track speeds, except where all trains operating over that crossing are equipped to be responsive to a positive train control system. This paragraph mandates that if a railroad decreases the maximum authorized speed of trains operating over a crossing, the whistle board must be moved closer to the crossing. Conversely, if the maximum authorized speed is increased, then the whistle board must be placed farther from the crossing. Railroads must ensure that whistle boards are placed at a distance from each crossing equal to the distance traveled by a train in 20 seconds while operating at the maximum speed allowed for any train operating in that direction of movement.

Paragraph (e) establishes a maximum distance of ¼ mile before a crossing, over which a train horn may be sounded, regardless of train speed. Sound diminishes at a rate of approximately 7.5dB(A) for each doubling of distance. Thus, a locomotive horn registering 100dB(A) at 100 feet in front of the locomotive will have diminished to roughly 75 dB(A) at ¼ mile (1,320 feet) in front of the locomotive. That distance is likely near the outer margin of utility in terms of alerting the motorist to oncoming trains at that particular crossing.

Section 222.23 Emergency and Other Uses of Locomotive Horns

Paragraph (a) of this section is meant to make clear that even at grade crossings subject to quiet zone conditions, locomotive engineers may sound the locomotive horn in emergency situations. Nothing in this part is intended to prevent an engineer from sounding the locomotive horn to provide a warning to vehicle operators, pedestrians, trespassers or crews on other trains in an emergency situation if, in the engineer's sole judgment, such action is appropriate in order to prevent imminent injury, death or property damage. Establishment of a quiet zone does not prevent an engineer from sounding the horn in such situations, nor does it impose a legal duty to do so. Additionally, paragraph (b) provides

that nothing in this part restricts the use of the horn to announce the approach of the train to roadway workers in accordance with a program adopted under 49 CFR part 214. This regulation is not meant to restrict the use of the locomotive horn when active crossing warning devices have malfunctioned and use of the horn is required by either 49 CFR 234.105 (activation failure), 234.106 (partial activation), or 234.107 (false activation).

Subpart C—Exceptions To Use of the Locomotive Horn

Section 222.31 Train Operations Which Do Not Require Sounding of Horns at Individual Crossings

This section addresses the situation in which locomotive horns need not be sounded even though the crossing is not part of a quiet zone. Locomotive horns need not be sounded at individual highway-rail grade crossings at which the maximum authorized operating speed (as established by the railroad) for that segment of track is 15 miles per hour or less and properly equipped flaggers (as defined by 49 CFR 234.5) provide warning to motorists. These limited types of rail operations do not present a significant risk of loss of life or serious personal injury and thus, under the Act, may be exempted from the requirement to sound the locomotive horn. Locomotive horns will still be required to be sounded if automatic warning systems have malfunctioned and the crossing is being flagged pursuant to 49 CFR 234.105, 234.106, or 234.107. Horns will still be required in these limited circumstances in order to offset the temporary loss of the active warning which motorists have presumably come to rely on.

This section is an exception to the requirement that silencing of locomotive horns must include all crossings within a designated quiet zone. This section permits a railroad, on its own initiative, to silence its horns at individual crossings under certain circumstances in which the safety risk is low. The primary purpose of this section is not the same as that of § 222.35 (''Establishment of quiet zones''). Rather than silencing horns for the benefit of the surrounding community, this section will be used primarily at crossings located in industrial areas where substantial switching occurs, and would avoid unnecessary noise impacts on those railroad personnel working on the ground in very close proximity to the locomotive horn. This section recognizes that under the noted conditions, public and railroad safety do not require the sounding of locomotive horns—a railroad is thus free to eliminate them. Since the primary beneficiary of this section is not nearby residences, the reasoning for the establishment of quiet zones rather than individual quiet crossings would not be applicable here. There is no additional burden placed on an engineer in this situation since the flagger will generally be a member of the train crew itself, and the engineer will not be placed in the position of having to determine when horns must be silenced or sounded as would be the case if horns could be silenced on an individual crossing basis. Additionally, prevention of noise spill-over from a crossing would not be a consideration in these situations.

FRA has considered whether railroad operations involving less frequent service and slow speeds, such as railroad operations typically associated with short lines and secondary lines, should also be categorically excluded from the requirement to sound locomotive horns based on the premise that they do not present a significant risk of loss of life or serious personal injury. Another factor which could be considered in addition to the above factors is the level of highway traffic over the crossing. While FRA is not proposing at this time to categorically exclude crossings based on these factors, FRA solicits comments, and specific suggestions as to the desirability of categorically excluding certain crossings based on a combination of the above factors or other characteristics of crossings that significantly affect risk. Inclusion of supporting data and analysis is encouraged.

Section 222.33 Establishment of Quiet Zones

Methods of Establishing a Quiet Zone

This section addresses the manner in which quiet zones are established. A quiet zone is defined as a segment of rail line within which is situated one or a number of consecutive highway-rail crossings at which locomotive horns are not routinely sounded. The concept of quiet zones is crucial to understanding the intent and thrust of this proposed rule. While it would be possible to approve a ban on locomotive whistles on a case-by-case, or a crossing-by-crossing basis, the desired result of less disruption to the surrounding community by locomotive horn noise would be minimal. Because a locomotive horn must be sounded well in advance of a grade crossing, the noise spill-over from a crossing not subject to a ban could still disrupt the community near a crossing where horns are banned. As a result, the concept of a quiet zone was developed, which would essentially fulfill the following purposes: ensure that a whistle ban would have the greatest impact in terms of noise reduction; ease the added burden on locomotive crews of the necessity of determining on a crossing-by-crossing basis whether or not to sound the horn; and enable grade crossing safety initiatives to be focused on specific areas within the quiet zone.

FRA proposes two different methods of establishing quiet zones, depending on local circumstances. In one method (provided for in § 222.33(a)), every public grade crossing within the proposed quiet zone would have a supplementary safety measure applied to the crossing. These measures, which are listed in Appendix A, have been determined by FRA to be an effective substitute for the locomotive horn in the prevention of highway-rail grade crossing casualties. In other words, these measures each have an effectiveness rate which is at least equivalent to that of a locomotive horn. Because each highway-rail grade crossing would be upgraded from the standard flashing lights and automatic gates to a crossing with a supplementary safety measure, FRA's role would be minimal. The governmental entity establishing the quiet zone would only need to designate the extent of the quiet zone, install the supplementary safety measures, and comply with various notice and information requirements of § 222.35(a).

Another method (provided for in § 222.33(b)) of establishing a quiet zone permits a governmental entity greater flexibility in using supplementary safety measures or other types of safety measures (alternative safety measures) to deal with problem crossings. While Appendix A lists those measures which FRA believes fully compensate for the lack of a locomotive horn, Appendix B includes all Appendix A measures and adds other safety measures whose success in compensating for the locomotive horn is dependent on the level of time and effort expended by the community. Such measures include public safety education and increased law enforcement programs. Using a combination of supplemental safety measures from Appendix A, alternative safety measures listed in Appendix B, and tailoring supplemental safety measures to unique circumstances at specific crossings, the governmental entity is provided with a greater level of flexibility than is available using only supplementary safety measures from Appendix A. Another major difference in this approach from the earlier method

is the manner in which risk is viewed. In this more flexible approach, risk will be viewed in terms of the quiet zone as a whole, rather than at each individual grade crossing. Thus, FRA would consider a quiet zone under this approach that does not have a supplemental safety measure at every crossing as long as implementation of the proposed supplementary and alternative safety measures on the quiet zone as a whole will cause a reduction in risk to compensate for the lack of a locomotive horn. If the aggregate reduction in predicted collision risk for the quiet zone as a whole is sufficient to compensate for the lack of a horn, a quiet zone may be established.

Because of the greater flexibility and the greater variation in possible risk reduction, FRA would take a much more active role in reviewing the approach of the governmental entity. Paragraph (b) of this section provides that a state or local government may apply to the FRA Associate Administrator for Safety for acceptance of a quiet zone, within which one or more safety measures identified in Appendix B (alone or together with supplementary measures identified in Appendix A), will be implemented. The application for acceptance must contain a commitment to implement the proposed safety measures within the proposed quiet zone. The applying entity must demonstrate through data and analysis that implementation of the proposed measures will effect a reduction in risk at public highway-rail crossings within the quiet zone sufficient to equal the reduction in risk that would have been achieved through the use the locomotive horn.

It is important to note that, as required in paragraph (d) of this section, all public highway-rail crossings in a quiet zone, except for those exceptions contained in § 222.31 and Appendix C, must be equipped with automatic gates and lights that conform to the standards contained in the Manual on Uniform Traffic Control Devices.

Under paragraph (b)(2), the FRA Associate Administrator for Safety may take one of three actions in response to a state or local government application: (1) The quiet zone may be accepted as proposed; (2) the Associate Administrator may accept the proposed quiet zone under additional conditions designed to ensure that the safety measures fully compensate for the absence of the warning provided by the locomotive horn; or (3) the proposed quiet zone may be rejected if, in the Associate Administrator's judgment, the proposed safety measures do not fully compensate for the absence of the warning provided by the locomotive horn.

Paragraph (c) addresses the categories of crossings which the Administrator has determined do not present a significant risk with respect to loss of life or serious personal injury if the locomotive horn is not sounded. In the very limited situations listed, neither supplementary safety measures, nor lights, gates and bell are required at the crossing. Appendix C contains a list of those criteria which must be met for a quiet zone to be established under this provision. The criteria include: Maximum authorized train speed as established by the railroad does not exceed 15 miles per hour; the train travels between traffic lanes of a public street or on an essentially parallel course within 30 feet of the street; unless the railroad is actually situated on the surface of the public street, traffic on all crossing streets is controlled by STOP signs or traffic lights which are interconnected with automatic crossing warning devices; and the locomotive bell is rung when approaching and traveling through the crossing.

FRA'S Approach and Request for Comments. FRA has specified in Appendix B the manner in which the community must show the reduction in risk resulting from its proposed alternative safety measures. In proposing the very specific procedures cited in Appendix B (and in its introduction), FRA has been guided by the need to establish a predictable environment within which affected communities can plan and take action. FRA believes that such objective measures will help communities in their decision-making process, as well as assist FRA in determining which proposals will in fact provide for the safety of the motoring and rail public. One alternative to FRA's proposal would allow communities to perform their own effectiveness analyses based on methodology of their own choosing with subsequent reporting of the methodology and data results to FRA. That alternative would result in FRA review of both the methodology and the data involved in each submission from each locality wishing to establish a quiet zone. That approach might provide greater flexibility to communities to design countermeasures meeting their needs and circumstances. However, FRA is concerned that this approach might overwhelm FRA's resources and delay approvals beyond reasonable limits. This could backlog review of proposed new quiet zone proposals emanating from communities impacted by industry restructuring (such as the proposed acquisition of Conrail by Norfolk Southern and CSX Transportation). Further, ascertaining appropriate decisional criteria for evaluating community submissions might present a major challenge. The proposed alternative measures laid out in this notice already comprehend the broad range of safety measures within the traditional crossing safety categories of ''engineering, education, and enforcement.'' Commenters are asked to note specific examples of opportunities that might be presented by less definite enumeration of alternative measures.

FRA encourages comments on the proposed regulatory approach, as well as alternative suggestions as to the best way to assure that alternative safety measures will in fact compensate for the lack of a locomotive horn.

Who May Establish a Quiet Zone

Under this proposed rule, a local political jurisdiction, in addition to a state, can establish a quiet zone. FRA does not intend that the proposed rule confer authority on localities to establish quiet zones if state law does not otherwise permit such actions. Local political jurisdictions are creations of their respective states and their powers are thus limited by their individual state law or constitution.

Under the Act and the proposed regulations, establishment of quiet zones requires specific action by a state or local governmental body. Therefore, if the appropriate political entity determines that sounding of locomotive horns at grade crossings is the proper course of action for their community, no specific action needs to be taken to ensure that locomotive horns are sounded at every public highway-rail grade crossing. This is, of course, a legitimate public policy result. However, if quiet zones are desired, there are a number of approaches that could be considered in terms of application and implementation.

First, one approach could be that all designations and applications under this section must come from a state agency. Under this approach, FRA would deal with only one entity from each state. How the state determines which quiet zones are designated and which should be the subject of an application for acceptance would be up to each individual state. The processes may be as varied as: the state agency acting only as a conduit for designations and applications; the agency acting as a filter to weed out ''inappropriate'' applications; or, the state agency acting solely on its own to determine the extent of designations and applications.

A second approach would limit authority for designations and

applications to the political subdivision with direct responsibility over traffic safety at a crossing. This approach would present problems inasmuch as a line of railroad typically crosses state highways, and city, county, and village roads.

A third approach would require the political subdivision in which the proposed quiet zone is located to be the applicant.

FRA at this time contemplates that both states and local jurisdictions (if they have the legal authority to do so) will establish quiet zones under both paragraphs (a) and (b) of this section. FRA encourages comments on this regulatory approach.

Length of Quiet Zone

Paragraph (d) addresses the minimum length of a quiet zone. FRA believes that if locomotive horns are to be prohibited along a segment of track, the underlying purpose of the prohibition will not be served unless the prohibition is effective on a corridor-like basis. Without a quiet zone requirement, the sounding of horns may be prohibited at one crossing, required at the next crossing two blocks away, and then prohibited at the next crossing one-quarter mile along the line. Because horns must be sounded in advance of a public highway-rail crossing, the horn being sounded at the one crossing in the example will effectively negate a large measure of the benefit of the prohibition elsewhere along the corridor.

In addition to ensuring the benefits of the prohibition within the zone, imposition of a horn prohibition on a zone basis will eliminate excessive, and unnecessary workload demands on the engineer, permitting greater attention to other locomotive operating requirements. Without a zone prohibition, the engineer will be faced with the need to constantly be aware of which crossings are subject to a prohibition and which are not. Such a situation provides a greater chance of human error than if the engineer need only concentrate on groups of crossings. Paragraph (d) establishes the minimum length of a quiet zone as 2,640 feet (one-half mile). The community which establishes a quiet zone has the discretion to determine the length (subject to the one-half mile minimum); however, certain factors should be taken into consideration in establishing such a quiet zone. While locomotive horns can not be routinely sounded at all crossings within the quiet zone, it is entirely possible that sound from a locomotive horn for a crossing just outside the quiet zone will begin in the quiet zone or will intrude into the area of the quiet zone. It is up to the community to devise the placement of a quiet zone to minimize that effect.

The following is an example of two different acceptable quiet zones in terms of placement: *Example No. 1:* A single grade crossing at milepost 4.5 is subject to a quiet zone. In this situation, the quiet zone would extend at least one-quarter-mile in each direction along the right-of-way. If there are public highway-rail grade crossings at milepost 4.2 or 4.8, (both of which are outside of the quiet zone), locomotive horns would need to be sounded for those crossings, despite beginning within the quiet zone or despite intruding into the quiet zone. In this example, a community could extend the quiet zone to include either, or both additional crossings. Those crossings must then either comply with the requirements contained in Appendix A, or the quiet zone as a whole must compensate for the lack of a horn through a combination of measures from Appendix A and Appendix B.

Example No. 2: Four public highway-rail grade crossings at every block for a distance of .4 mile. (Crossings at mileposts 4.5, 4.6, 4.7, 4.8 are subject to a quiet zone.) Additional crossings at mileposts 4.3 and 4.4 do not have to be included in a quiet zone if the quiet zone is extended in the other direction along the track—to milepost 5.0. That would be acceptable even if there were no crossings from milepost 4.8 to 5.0. The crossings within the quiet zone in this example, like the crossings in Example No. 1, must then either comply with the requirements contained in Appendix A, or the quiet zone as a whole must compensate for the lack of a horn through a combination of measures from Appendix A and Appendix B. It is clear that under this approach, locomotive horn noise for crossings at mileposts 4.3 and 4.4 will intrude or begin within the quiet zone. However, the approach set out here provides a community with the greatest flexibility in determining how to, and where to establish quiet zones.

BILLING CODE 4910–06–P

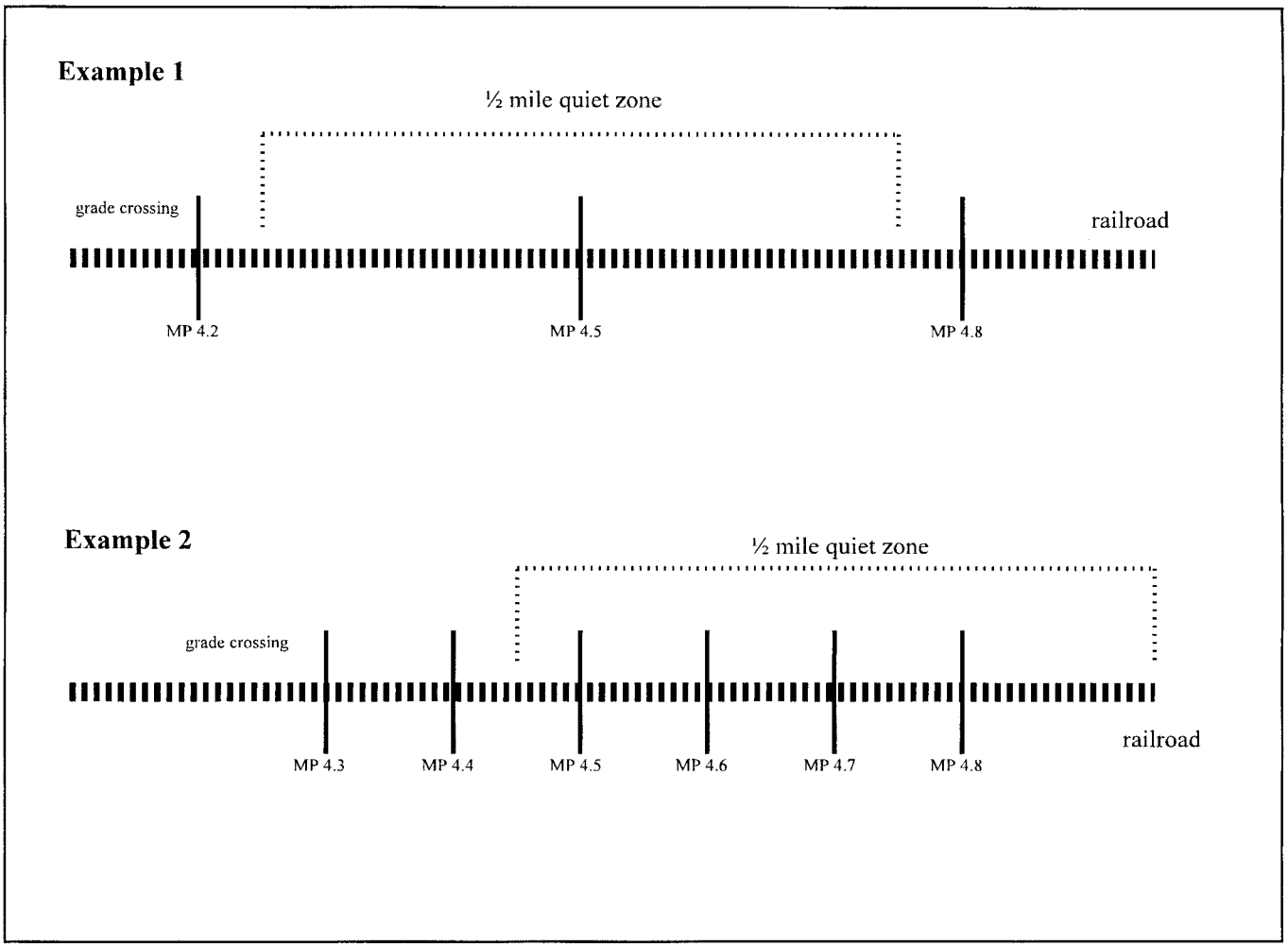

BILLING CODE 4910–06–C

Requirement for Active Warning Devices

Paragraph (e) provides that, except for slow speed train movements over public highway-rail grade crossings as addressed in § 222.31, and quiet zones established in accordance with paragraph (c) of this section, each crossing in a quiet zone must be equipped with automatic gates and flashing lights that conform to the standards contained in the Manual on Uniform Traffic Control Devices. This section makes it clear that installation or upgrading of these devices is not regarded as implementation of supplementary safety measures under this part, nor will the risk reduction resulting from the installation or upgrading be credited toward the compensating reduction in risk referenced in paragraph (b). If the new warning system exceeds the standards of the MUTCD and conforms to the requirements for supplementary safety measures contained in Appendix A, that risk reduction attributable to the supplementary safety measure in accordance with Appendix A may be credited toward the risk reduction referenced in paragraph (b).

Requirement for Advance Warning Signs

Paragraph (f) ensures that motorists are notified wherever horns are not required to be sounded. The paragraph requires that each highway approach to each public highway-rail crossing at which locomotive horns are not routinely sounded pursuant to this part shall be equipped with an advance warning sign advising the motorist that train horns are not sounded at the crossing. FRA will leave to individual states the decision as to specific size and design of the required signs, however, they must be in conformance with the MUTCD. FRA is not at this time proposing that approaches to each private highway-rail crossing be equipped with such advance warning signs. FRA solicits comments as to whether such signs should be required, and if so, who should be responsible for installation and maintenance. A factor to consider is that by definition, the approaches to these crossings are on private, rather than public property.

Section 222.35 Notifications, Affirmations, and Required Information

Paragraph (a) requires a state or local government designating a quiet zone under § 222.33(a) to provide written notice of the designation to all railroads operating over public highway-rail grade crossings within the quiet zone, the highway or traffic control authority and law enforcement authority having control over vehicular traffic at the crossings within the quiet zone, the state agency responsible for highway and road safety, and the FRA Associate Administrator for Safety. In order to ensure that all parties have notice and sufficient time to prepare for the change at the crossings, all notices required under this section must be provided by certified mail, return receipt requested.

Paragraph (b) contains the notice requirements which apply to the

situation in which a state or local government has proposed a quiet zone for acceptance by FRA under § 222.33(b). Upon acceptance of a quiet zone by FRA, the state or local government must provide written notice by certified mail, return receipt requested, of the acceptance to all railroads operating over the public highway-rail grade crossings within the quiet zone, the highway or traffic control authority or law enforcement authority having control over vehicular traffic at the crossings within the quiet zone, and the state agency responsible for highway and road safety.

Paragraph (c) ensures that certain needed information is provided to FRA. This section requires that certain information be provided to the FRA Associate Administrator for Safety.

Paragraph (1) requires an accurate and complete U.S. DOT–AAR National Highway-Rail Grade Crossing Inventory Form (Inventory Form) for each crossing dated within six months prior to the designation of FRA acceptance of the quiet zone. The information from this form will establish a base-line from which FRA can determine the measures taken by the state or locality to compensate for the lack of a locomotive horn.

Paragraph (2) requires submission of a current Inventory Form which reflects the supplementary and alternative safety measures which have been put in place upon establishment of the quiet zone.

Paragraph (3) requires the name and title of the state or local official responsible for monitoring compliance with this regulation and the manner in which the person can be contacted.

Section 222.37 Quiet Zone Implementation

Paragraph (a) provides that a quiet zone can not be implemented until all requirements of § 222.35 are complied with and at least 14 days have elapsed since the required parties have received the notifications required by that section. The notification provision and two-week delay will ensure that the various interested parties have time to inform employees and others regarding the changes at the crossings. Paragraph (b) provides that all railroads operating over public highway-rail grade crossings within a quiet zone established in accordance with this regulation shall cease routine use of the locomotive horn as of the date established by the state or local government, which of course can be later than the 14 day minimum period. This paragraph prohibits the routine use of the locomotive horn within the quiet zone. However, the rule is not meant to prohibit the occasional use of the horn for railroad operating purposes such as for crew and flagger communications when radios fail. The rule does not prohibit use of the horn in emergency situations or as a method of warning railroad workers of the approach of the train. (See § 222.23.)

Section 222.39 Quiet Zone Duration

Paragraph (a) governs the duration of quiet zones designated by state or local governments under § 222.33(a) i.e., zones in which supplementary safety measures are in place at each crossing. A quiet zone may remain in effect indefinitely if all the requirements of this rule are complied with, and if, within six months before the expiration of five years from the original designation made to FRA, the designating entity (the state or local government) affirms in writing, by certified mail, return receipt requested, to the same parties receiving the original notification of implementation of the quiet zones under § 222.35(a), that the supplementary safety measures implemented within the quiet zone continue to conform to the requirements of Appendix A of the regulation. The designating entity must thereafter affirm within six months before the fifth anniversary of the prior affirmation that the supplementary safety measures implemented within the quiet zone continue to conform to the requirements of Appendix A of the regulation.

This paragraph, as well as paragraph (b), also requires that along with its affirmation, the governmental entity must send to the FRA Associate Administrator for Safety an accurate and complete U.S. DOT–AAR National Highway-Rail Grade Crossing form (FRA F6180.71) (available through the FRA Office of Safety Analysis, 202–493–6299) for each public highway-rail grade crossing. This requirement will ensure that the National Inventory is kept current regarding all crossings within quiet zones.

Paragraph (b) governs the duration of quiet zones accepted by FRA under § 222.33(b), *i.e.,* zones that, as a whole, comply with Appendix B. This provision is similar to paragraph (a), with the exception that the period between affirmations is 3, rather than 5 years and that the state or local government must affirm that the supplementary and alternative safety measures in place continue to be effective and continue to fully compensate for the absence of the warning provided by the locomotive horn. FRA is proposing a shorter period between affirmations because of the greater possibility that changed circumstances will affect the effectiveness of the safety measures put in place in the quiet zone. Because every public highway-rail crossing subject to the five year affirmation period has in place a supplementary safety measure providing sufficient compensation for lack of a locomotive horn, as long as such measures remain in place, FRA can be assured that safety is being maintained along the entire quiet zone. However, because the safety measures instituted at crossings subject to the three year affirmation period are dependent on local circumstances and local effort, review on a more frequent basis is appropriate. FRA solicits comment on this proposal.

Paragraph (d) provides that the FRA Associate Administrator for Safety may, at any time, review the status of any quiet zone and determine whether the safety measures in place fully compensate for the absence of the warning provided by the locomotive horn under the conditions then present at the public highway-rail grade crossings within the quiet zone. This oversight will enable FRA to take action in the event that conditions at the crossings have changed sufficiently so that safety measures originally installed and implemented are insufficient to compensate for the lack of a horn. Under this provision, if the Associate Administrator makes a preliminary determination that the safety measures in place do not fully compensate for the absence of the locomotive horn, notice of the determination will be published in the **Federal Register** and an opportunity for comment and informal hearing will be provided. The Associate Administrator may thereafter require that additional safety measures be taken to ensure that there is full compensation for the absence of the locomotive horn. This paragraph also provides for termination of the quiet zone if conditions so warrant.

Section 222.41 Supplementary and Alternative Safety Measures

Paragraph (a) states that a list of approved supplementary safety measures are listed in Appendix A to this regulation. These measures, based on the best available data, have been determined by FRA to be an effective substitute for the locomotive horn in the prevention of highway-rail casualties.

Paragraph (b) states that additional, alternative safety measures that may be included in a request for FRA acceptance of a quiet zone under § 222.33(b) are listed in Appendix B.

Paragraph (c) states that Appendix C contains a list of those situations which the Administrator has determined do

not present a significant risk with respect to loss of life or serious personal injury from establishment of a quiet zone. In the very limited situations listed, supplementary safety measures are not required because the requisite level of safety has already been achieved.

Paragraph (d) provides that the Administrator will add new listings to Appendices A or B when the Administrator determines that such measures or standards are effective substitutes for the locomotive horn in the prevention of highway-rail grade crossing casualties. The Administrator will add new listings to Appendix C when it is determined that no negative safety consequences result from the establishment of a quiet zone under the listed conditions.

Paragraph (e) is based on language contained in the Act, and makes clear that the following traditional highway-rail grade crossing safety measures do not individually, or in combination, constitute supplementary safety measures: standard traffic control devices or arrangements such as reflectorized crossbucks, stop signs, flashing lights, or flashing lights with gates that do not completely block travel over the line of railroad, or traffic signals.

Section 222.43 Development and Approval of New Supplementary Safety Measures

This section discusses the manner in which new supplementary safety measures may be demonstrated and approved for use. Paragraph (a) provides that interested parties may demonstrate proposed new supplementary safety measures to determine if they are an effective substitute for the locomotive horn in the prevention of highway-rail grade crossing casualties. Paragraph (b) provides that the Administrator may order railroad carriers operating over a crossing or crossings to temporarily cease the sounding of locomotive horns at such crossings to demonstrate proposed new supplementary safety measures. This paragraph reflects statutory language and requires that such proposed new supplementary safety measures have been subject to prior testing and evaluation before such an order is issued. The Administrator's order to the railroads to temporarily cease sounding of horns may contain any conditions or limitations deemed necessary in order to provide the highest level of safety. These provisions provide an opportunity for the testing and introduction of new grade crossing safety technology which would provide a sufficient level of safety to enable locomotive horns to be silenced. FRA has, in one case to date, ordered a railroad to cease sounding horns for the purposes of testing. In Spokane, Washington, the Burlington Northern Santa Fe Railway (BNSF), Spokane County, Washington State Public Utilities Commission and the FRA worked together to test the effectiveness of median barriers as a substitute for the locomotive horn. See 62 FR 54681, August 21, 1997. To accomplish this test, BNSF was ordered to cease sounding of the horn after installation of engineering improvements at the two subject crossings. This test is continuing.

Paragraph (c) provides that upon the successful completion of a demonstration of proposed supplementary safety measures, interested parties may apply for their approval. This section requires certain information to be included in every application for approval.

Paragraphs (d) and (e) provide that if the FRA Associate Administrator for Safety is satisfied that the proposed supplementary safety measure fully compensates for the absence of the locomotive horn, its use as a supplementary safety measure (with any conditions or limitations deemed necessary) will be approved and it will be added to Appendix A.

Paragraph (f) provides an opportunity to appeal a decision of the FRA Associate Administrator for Safety. The party applying for approval of a supplementary safety measure may appeal to the Administrator a decision by the FRA Associate Administrator for Safety rejecting a proposed supplementary safety measure or the conditions or limitations imposed on use.

Section 222.45 Communities With Pre-existing Restrictions on Use of Locomotive Horns

Section (i)(1) of section 20153 requires that in issuing these regulations, FRA take into account the interests of communities that ''have in effect restrictions on the sounding of a locomotive horn at highway-rail grade crossings, or have not been subject to the routine * * * sounding of a locomotive horn at highway-rail grade crossings. This section is meant to address that statutory requirement. FRA requests public comment regarding the provisions of this section. Paragraph (a) provides that communities which as of the date of issuance of this NPRM have enacted ordinances restricting the sounding of locomotive horns, or communities which as of the same date have not been subject to the sounding of locomotive horns at public highway-rail crossings due to formal or informal agreements with the railroad may continue those restrictions for a period of up to three years from the date the final rule is issued. This period will enable the community to plan for, and implement additional safety measures at the affected crossings without the sounding of horns in the intervening period. This three-year period is dependent on compliance with paragraph (b).

Paragraph (b) states that if a community with pre-existing restrictions on locomotive horns has not designated a quiet zone (under § 233.33(a)) or had a quiet zone accepted by FRA (under § 233.33(b)) within two years after the date of issuance of the final rule, the community must, within two-years of issuance of the final rule, initiate or increase highway-rail grade crossing safety public awareness initiatives and grade crossing traffic law enforcement programs in an effort to offset the lack of supplementary safety measures at the affected crossings. If, however, the community does not take actions to initiate or increase public awareness initiatives and traffic law enforcement programs, locomotive horns must be sounded in accordance with § 222.21. Thus, the effect of paragraphs (a) and (b) provides communities with pre-existing whistle bans a three-year grace period to comply with §§ 233.33(a) or (b). If those communities do not initiate or increase public awareness initiatives and traffic law enforcement programs by the end of the second year after issuance of the final rule, then the three year grace period is reduced to two years.

A number of communities wishing to implement quiet zones have worked with FRA in developing programs of supplementary safety measures. These programs reflect the early commitment of local officials to both improve railroad safety and to minimize the disruption caused by train horns. These communities were concerned that if they invested funds in engineering improvements prior to issuance of this rule, those improvements might not be among those approved in the final rule, and thus they would be forced to spend more tax dollars installing other safety improvements after the final rule was issued. Given the absence of a regulation in force, the communities were free to ban sounding of the locomotive horn without implementing any grade crossing safety improvements at all. Neither these communities, nor FRA, wanted a whistle ban without supplementary safety measures in place. Therefore, FRA partnered with these

communities to develop workable, sound safety plans. As a result of these efforts, communities were able to reduce noise intrusion while FRA reaped the benefits of ''real world'' experience in the implementation of supplementary safety measures.

The quiet zones established, or planned to be established, by the following communities have been evaluated by FRA as being in compliance with the requirements of proposed § 222.33(b): crossings in Burlington, Vermont suburbs on the Vermont Railway; crossings in Louisville, Kentucky on CSX Transportation Company; single crossing at McNabb Road on Southeast Florida Rail Corridor; single crossing in Richardson, Texas; five crossing in Yakima, Washington, on the BNSF Railway; single crossing in Spokane, Washington on BNSF Railway; eleven crossings in Covina, California on MetroLink; and a single crossing in Westfield, New Jersey on the Lehigh Valley Railroad.

Accordingly, FRA proposes to exempt those communities from the initial acceptance requirements of that paragraph. Provisions of § 222.39(b) (Quiet Zone Duration) which contains periodic reaffirmation and notification requirements would apply to those quiet zones. FRA solicits comments regarding this, or any other suggested regulatory approach to those communities which have pre-existing restrictions on the use of locomotive horns.

Appendices A and B

Appendix A lists those supplementary safety measures which FRA has determined effectively compensate for the lack of a locomotive horn. Because each supplementary safety measure in this appendix fully compensates for the lack of a locomotive horn, a quiet zone may be established without specific FRA approval.

Appendix B lists those alternative safety measures which may compensate for the lack of a locomotive horn depending on the extent of implementation of the safety measure. Because of the many possible variations, FRA acceptance of the proposed implementation plan is required.

Community Guide

The introduction to Appendix A discusses the issues and actions that state and local governments should be aware of in determining how to proceed in implementing quiet zones. The guide is meant to assist in the community's decision-making process in determining whether to designate a quiet zone under § 222.33(a) or to apply for acceptance of a quiet zone under § 222.33(b). The guide also contains details regarding the methods to be used in performing analyses which must accompany applications for acceptance of a quiet zone under § 222.33(b). If a crossing within a proposed quiet zone can not be addressed with a supplementary safety measure from Appendix A, the applicant community (or state) will need to show that once a quiet zone is implemented under the alternative safety measures listed in Appendix B, the number of accidents that can be expected on that quiet zone corridor will not increase. As a basis for that series of calculations, which are described in detail in the Introduction, FRA proposes to require that communities use the DOT Highway-Rail Crossing Accident Prediction Formula. The Accident Prediction Formula provides a means of calculating the expected annual number of accidents and casualties at a crossing on the basis of the crossing's characteristics and the crossing's historical accident experience. FRA's Regional Managers for Highway-Rail Crossing Safety who are located throughout the United States will be available to assist the communities in performing that analysis. Thus, all calculations involving a specific corridor proposed for a quiet zone will be based on the accident history at those crossings together with the characteristics of the crossing.

Appendix A

This Appendix lists those supplementary safety measures which FRA has determined effectively compensate for the lack of a locomotive horn. Included in the discussion of each supplementary safety measure is an ''effectiveness'' figure for that measure. That figure indicates the effectiveness of the supplementary safety measure in reducing the probability of a collision at a highway-rail grade crossing.

The effectiveness (see definition of effectiveness rate in § 222.7) figures discussed for each supplementary safety measure are based on available empirical data and experience with similar approaches. The effectiveness figures used in Appendix A are subject to adjustment as research and demonstration projects are completed and data is gathered and refined. FRA proposes to use these estimates as benchmark values to determine the effectiveness of an individual supplementary safety measure and the combined effectiveness of all supplementary safety measures along a proposed quiet zone. FRA seeks comments, including any data or analysis, concerning the appropriateness of the individual estimates. FRA also encourages public comments on the appropriateness of this approach in general.

FRA's national study of train horn effectiveness indicated that collision probabilities increase an average of 62 percent when horns are silenced. As such, the supplementary safety measure should have an effectiveness of at least .38 (reducing the probability of a collision by at least 38 percent) in order to compensate for this 62 percent increase. For example, if a select group of 1,000 crossings are expected to have 100 collisions per year with train horns being sounded, this same group of crossings would be expected to have 162 collisions per year once the train horn is banned if no other safety measures are implemented and other factors remain unchanged. Conversely, if these same crossings were experiencing 162 collisions per year while the horn was banned, it would be expected that this number would reduce to 100 once use of the horn is reinstituted. This would equate to an effectiveness of 62/162, or .38.

FRA is aware this figure is an average, but it has the benefit of reflecting the broadest range of exposure available to the agency. FRA is willing to consider well founded arguments that train horn effectiveness is heightened or reduced under specific circumstances. However, any such argument would need to be grounded in sound data and analysis. This could potentially create significant difficulty in administration of the final rule, since historic collision patterns over a small number of crossings are not, by themselves, meaningful predictors of future exposure. FRA requests comment as to whether it is practical to use any value other than a national average with respect to train horn effectiveness.

There is one case for which FRA has sufficient data to estimate train horn effectiveness on a particular corridor. That is the Florida East Coast Railroad and the territory subject to Emergency Order 15. In that case, FRA can point to exposure for over 500 crossings over a period of eight years with experience both before and after the whistle ban period indicating consistent results. For that territory, FRA proposes to apply an effectiveness rate of 68% (.68) for the train horn. It should be noted that the extraordinary impacts shown in Florida have been segregated from the ''national'' data, and the national average of effectiveness of .38 (38 percent reduction) for train horns does not include the Florida experience. FRA requests comment as to what extent the

Florida experience may be relevant to other areas.

Much of the data available today to evaluate the effectiveness of supplementary safety measures reflects the reduction in violation rates, not collision rates. (Collisions are rare, and determination of a collision rate reduction for any one supplementary safety measure requires long term data collection.) Only one study (in Los Angeles) has contrasted collision rates with violation rates, and out of necessity (until additional data is available), this finding is used in these analyses. In the Los Angeles demonstration it was noted that a carefully administered and well publicized program of photo enforcement reduced violation rates by 92 percent, while collisions were reduced by only 72 percent. This ratio, 72:92 or .78, is proposed to be used to adjust violation rate reductions in order to estimate resultant reductions in collision rates for law enforcement and education/awareness options described in Appendix B. Violations that result in collisions constitute a small subset of all violations. It is reasonable to infer that education and legal sanctions may lack effectiveness for several segments of the population, including those who do not become aware of the countermeasures (*e.g.,* because they are not residents of the area, do not follow public affairs in the media, or are difficult to reach because they are not fluent in English or other principal languages in which information is disseminated) and those who are particularly inclined to violation of traffic laws. As such, for law enforcement and education/awareness options the rate of violations must be reduced at least 49 percent (measure must have an effectiveness value of at least .49) in order to realize the required 38 percent reduction in the risk of collision.

In contrast, engineering improvements such as those described in Appendix A appear to work in synergy with existing warning systems to condition and modify motorist behavior, reducing both the number of violations and the number of very close calls (violations within a few seconds of the train's arrival). Four-quadrant gates installed to date, for instance, appear to have been completely successful in preventing collisions. Although we would not expect this extraordinarily high level of success to be sustained over a broader range of exposure, excellent results would be expected. Accordingly, for engineering improvements contained in Appendix A this notice adopts estimates of success drawn from carefully monitored studies of individual crossings.

FRA is aware that the number and duration of observations in site-specific studies is small. However, FRA is working with a variety of parties to gather additional information that may be helpful in achieving further refinement of effectiveness rates and greater confidence that they predict future outcomes in circumstances not identical to those specifically studied. FRA has sought partnerships with communities to implement or preserve quiet zones through use of supplementary safety measures. Unfortunately, many communities have taken the view that they will wait to see how the rulemaking might proceed before acting. Accordingly, FRA will proceed with the information available and will continue to gather effectiveness data as this rulemaking proceeds.

1. Temporary Closure of a Public Highway-Rail Grade Crossing

This supplementary safety measure has the advantage of obvious safety and thus will more than compensate for the lack of a locomotive horn during the periods of crossing closure. The required conditions for closure are intended to ensure that vehicles are not able to enter the crossing. In order to avoid driver confusion and uncertainty, the crossing must be closed during the same hours every day and may only be closed during one period each 24 hours. FRA believes that such consistency will avoid unnecessary automobile to automobile collisions in addition to avoiding collisions with trains. Activation and deactivation of the system is the responsibility of the local traffic control authority or the entity responsible for maintenance of the street or highway crossing the railroad. Responsibility for activation and deactivation of the system may be contracted to another party, however the appropriate governmental entity shall remain fully responsible for compliance with the requirements of this section. In addition, the system must be tamper and vandal resistant to the same extent as other traffic control devices.

Effectiveness: Because an effective closure system prevents vehicle entrance onto the crossing, the probability of a collision with a train at the crossing is zero during the period the crossing is closed. Effectiveness would equal 1. However, traffic would need to be redistributed among adjacent crossings or grade separations for the purpose of estimating risk following imposition of a whistle ban, unless the particular ''closure'' was accomplished by a grade separation.

2. Four-Quadrant Gate System

A four-quadrant gate system involves the installation of gates at a public highway-rail grade crossing to fully block highway traffic from entering the crossing when the gates are lowered. This system includes at least one gate for each direction of traffic on each approach. A four quadrant gate system is meant to prevent a motorist from entering the oncoming lane of traffic to avoid a fully lowered gate in the motorist's lane of traffic. Because an additional gate would also be fully lowered in the other lane of the road, the motorist would be fully blocked from entering the crossing.

In defining ''supplementary safety measures'' Congress approved use of four quadrant gates as supplementary safety measures. The definition states in part: ''A traffic control arrangement that prevents careless movement over the crossing (*e.g.,* as where adequate median barriers prevent movement around crossing gates extending over the full width of the lanes in the particular direction of travel), and that conforms to the standards prescribed by the Secretary * * * shall be deemed to constitute a supplementary safety measure.'' The Association of American Railroads (AAR) has shared with FRA its views on four-quadrant gates. The AAR states, ''Since the operation of 4-quadrant gates has not yet been fully tried and proven, a false perception has been conveyed to [municipalities and state transportation agencies]. Continual advocacy of 4-quadrant gates * * * has put undue burdens on the railroads and its supply industry. The railroads are committed to grade crossing safety but are not exactly sure how 4-quadrant gates shall operate or if they will provide any additional benefits. * * *'' The AAR requested that FRA ''abstain from advocating the application of 4-quadrant gates until the operational and liability issues have been resolved.'' The AAR also submitted for FRA consideration a study entitled ''Design of Gate Delay and Gate Interval Time for Four-Quadrant Gate System at Railroad-Highway Grade Crossings'' by Dr. Fred Coleman of the University of Illinois. Dr. Coleman studied safe operating time parameters of four quadrant gates.

FRA has participated with the AAR, the Federal Highway Administration, the Brotherhood of Railroad Signalmen and railroad suppliers in discussions regarding four-quadrant gate systems. Those discussions resulted in some broad areas of agreement which have been incorporated into this proposed rule. Among areas of agreement are: (1) The need to do a location-specific

engineering study of the exit gate delay time; (2) that failure of the system would place the exit gates in the up position; and (3) highway presence detectors would be installed and maintained at the election of, and by, the local highway authorities. If detectors are provided, exit gates would remain up during the period the crossing is determined to be occupied by highway traffic.

Four-quadrant gate systems have been in existence for many years, and FRA believes that they have been fully tried and proven. There have been installations in several states: Wyoming; Tennessee; New Jersey; North Carolina; and Ohio, as well as in Canada, which involve various railroads, including the Burlington Northern Santa Fe, Norfolk Southern, New Jersey Transit Rail Operations, and Calgary Transit. Further, FRA understands that the Metropolitan Transportation Authority of Los Angeles is implementing four-quadrant gates on one of its transit lines. FRA welcomes a discussion of the efficacy of four-quadrant gates, timing and other safety considerations and any proposed alternatives to these gates.

FRA proposes that the following be required for all four-quadrant gate systems: When a train is approaching the crossing, all highway approach and exit lanes on both sides of the grade crossing must be spanned by gates to deny to the highway user the option of circumventing the conventional approach lane gates by switching into the opposing (oncoming) traffic lane in order to enter the crossing and cross the tracks. When the gates are fully lowered the gap between the ends of the gates must be less than two feet if no median between lanes is present. If there is a median or if channelization devices are installed, the gap between the gate end and the median or channelization device must be within one foot. If ''break-away'' channelization devices are used they must be frequently monitored and broken elements replaced. FRA also proposes to require that constant warning time devices activate the gates. This requirement will ensure that the gates are activated at the same amount of time prior to the arrival of a train irrespective of its speed. This will avoid long unnecessary waits at crossings being approached by very slow moving trains. FRA would also require that signs be posted alerting motorists that the train horn does not sound.

FRA also strongly recommends that the following conditions be applied when new four-quadrant gates are installed: Gate timing should be established by qualified traffic engineers. Because each crossing presents unique topographic and traffic conditions, such timing should be established based on site specific determinations. Consideration should be given to the need for a delay in the descent of the exit gates following the descent of the entrance gates (equivalent to conventional gates) to prevent a motorist from being ''locked in'' between the gates. Factors that should be considered include available storage space between the gates that is outside the fouling limits of the tracks (beyond the width of trains) and the possibility that traffic flows may be interrupted as a result of nearby intersections. Fail-safe mode of the gate system should include exit gates failing in the raised, or up position. Further, a determination should be made as to whether to provide vehicle presence detectors (VPDs) to open or keep open the exit gates until all vehicles are clear of the crossing. Among the factors to consider are the presence of the intersecting roadways near the crossing, the priority that the traffic crossing the railroad is given at such intersections, the types of traffic control devices at those intersections, and the presence and timing of traffic signal preemption.

FRA further recommends that highway approaches on one or both sides of the highway-rail crossing be provided with medians or channelization devices between the opposing lanes.

Effectiveness: FRA is confident that four-quadrant gates will provide a safe alternative to the locomotive horn. No highway-rail crossing collisions have been documented at any of the five four-quadrant gate installations in the United States nor at a demonstration site in Knoxville, Tennessee during 1985–1986. The oldest of the permanent installations dates from 1952. Recognizing the limited number of installations, however, FRA proposes very conservative estimates for effectiveness of this countermeasure.

FRA estimates effectiveness as follows:

Four-quadrant gates only, no presence detection: .82.

Four-quadrant gates only, with presence detection: .77.

Four-quadrant gates with medians of at least 60 feet (with or without presence detection): .92.

The estimate of .82 for free-standing four-quadrant gates (no medians and no presence detection) is a highly conservative figure involving a discount from documented experience. As noted above, four-quadrant gates installed in the United States thus far have been highly successful; and, in fact, these installations have been of this basic configuration. More formal investigation attempted thus far includes a recent four-quadrant gate installation in North Carolina, without medians, which reduced violations 86 percent compared to previous experience at the same crossing, which was previously equipped with standard gates. This North Carolina test ran for a period of 5 months, including base and test periods. However, it should be noted that the North Carolina observations involved simultaneous use of the train horn (both during the base period and the evaluation period). It is not known whether there is a significant synergistic effect between the train horn and the engineering improvements, but the short duration of the study and possibility of such effects suggest the need for the modest discount to the effectiveness rate.

Four-quadrant gate installations undertaken thus far in the United States have generally not employed vehicle presence detection (VPD). However, some future installations will incorporate this feature to ensure coordination with other traffic signals and for other purposes. For instance, tight geometry may not allow for any storage space within the gates should queuing of traffic at a STOP sign on one side of the crossing prevent prompt clearance by a motor vehicle. In such cases, leaving the exit gates in the raised position may be elected. Installing VPD will cause exit gates to remain up indefinitely as one or more vehicles pass over the crossing. Although providing VPD avoids the scenario of ''entrapment'' (long feared by some in the railroad community as a liability risk), it also allows the possibility that some motorists will follow violators through the crossing in a steady stream, defeating the intended warning. Accordingly, where medians are not provided to prevent this pattern, we assume a lower effectiveness rate. FRA estimates that four-quadrant gates with presence detection, but without median barriers, would have an effectiveness rate of approximately .77.

By contrast, where four-quadrant gates are supplemented by lengthy median barriers to discourage the violation minded driver, the use of presence detection should make little or no difference in the safety effectiveness of the arrangement. The North Carolina demonstration showed that, when the four-quadrant gate installation was supplemented by medians (channelization devices) of at least 50 feet on each highway approach, the crossing experienced a 97 percent drop in violations. Again applying a discount

to this illustration, FRA estimates an effectiveness rate of .92 for four-quadrant gates with median barriers of reasonable length.

It is important to re-emphasize that use of data regarding violations to estimate collision risk itself involves some hazard that effectiveness will be over- or under-estimated. FRA believes that the likelihood is that these estimates for four-quadrant gates are conservative, not only because of the excellent effectiveness of in-service four-quadrant installations, but also because of the North Carolina findings. In the North Carolina observations, as the number of violations decreased, the average number of seconds prior to arrival of the train also significantly increased (predicting that collisions might fall off at a faster rate than violations). The effectiveness of four-quadrant gates may thus be higher than the range stated above, both with and without medians and with presence detection.

It is also true that a variety of applications for these systems may result in a variety of effectiveness rates. FRA solicits comments, including any available data and analysis, regarding the effectiveness estimates on four-quadrant gates, as well as other supplementary safety measures described in this notice.

3. Gates With Medians or Channelization Devices

Keeping highway traffic on both highway approaches to a public highway-rail grade crossing in the proper lane denies the highway user the option of circumventing gates in the approach lanes by switching into the opposing (oncoming) traffic lane in order to drive around a lowered gate to cross the tracks.

FRA therefore proposes to require that gates with medians or channelization devices be considered supplementary safety measures if the following conditions are met. Opposing traffic lanes on both highway approaches to the crossing must be separated by either: (1) Medians bounded by barrier curbs, or (2) medians bounded by mountable curbs if equipped with channelization devices. Such medians must extend at least 100 feet from the gate, unless there is an intersection within that distance. If so, the median or channelization device must extent at least 60 feet from the gate. Intersections within 60 feet of the gate must be closed or moved. The crossing warning system must be equipped with constant warning time system. Additionally, the horizontal gap between the lowered gate and the median or channelization device must be one foot or less. As in other installations, ''break-away'' channelization devices must be monitored frequently, and broken elements replaced. Also, as at all crossings within a quiet zone, signs must be posted alerting motorists to the fact that the train horns are not sounded.

FRA estimates that mountable curbs with channelization devices have an effectiveness of .75 and barrier curbs with or without channelization devices have an effectiveness of .80. FRA has found that a gate installation in North Carolina with channelization devices 60 feet long and longer reduced violations by 77 percent. The period of data collection was 22 months. FRA requests that commenters address whether the estimate of .75 should be further reduced to reflect the novelty effect of the improvements at this crossing?

A gate installation in the State of Washington equipped with barrier curbs (with channelization devices), 99 feet long on one approach and 30 feet long on the other, experienced reductions in violations of 97.5 and 95.6 percent respectively during a 4-month test period while train horns continued to sound. Given the short period of observation, the novelty effect of the installation would be expected to result in somewhat superior performance to that which would be expected over the long term, particularly on the approach with the 30-foot median. Further, the particular application involved allowed for a clearly channelized two-lane, tangent roadway on level ground with median separation between two main tracks. In this setting, expectations concerning motorist behavior were exceptionally clear. As noted, the train horn continued to blow, reinforcing the engineering improvements. Accordingly, these data are not taken as indicative of the average or typical installation in a whistle ban environment.

It may be possible to describe combined effectiveness rates for barrier medians and mountable medians of varying lengths. Comments are requested on how this can best be accomplished.

4. One Way Street With Gates

This installation consists of one way streets with gates installed so that all approaching highway lanes are completely blocked. FRA would require that the gate arms on the approach side of the highway-rail grade crossing extend across the road to within one foot of the far edge of the pavement. If two gates are used, with one on each side of the road, the gap between the ends of the gates when they are in the down position should be no more than two feet if no median is present. If the highway approach is equipped with a median, the lowered gates should reach to within one foot of the median. In this and other similar measurements, the measurement should be horizontal across the road from the end of the lowered gate to the median or to a point over the median edge. The gate and the median top do not have to be at the same elevation. In situations in which only one gate is used, the edge of the road opposite the gate mechanism must have a barrier curb extending to and around the nearest intersection for at least 100 feet, so that the motorist cannot veer onto the shoulder of the road and drive around the gate tip.

FRA also proposes that the warning system be equipped with constant warning time systems as well as equipped with signs alerting motorists that the train horn does not sound.

Effectiveness: Lacking real world data from one way streets with gates, we are applying the effectiveness rate of .82 to this type supplementary safety measure which is the effectiveness rate for four-quadrant gates without medians. However, a case can be made that this arrangement should be as secure as four-quadrant gates with medians. Comment is requested on this issue. To what extent does current collision experience at existing gated one-way streets (with or without train horns sounding) impact the appropriate effectiveness rate?

5. Photo Enforcement

An automated means of gathering valid photographic or video evidence of violations of traffic laws relating to highway-rail grade crossings can be an effective supplementary safety measure if there is sufficient support and follow through by the law enforcement and judicial community. FRA would require that state law authorize use of photographic evidence both to bring charges against the vehicle owner and sustain the burden of proof that a traffic law violation has occurred. This would need to be accompanied by the commitment of the law enforcement and judicial communities to vigorously enforce the traffic laws in this area. Evidence of sufficient commitment would be traffic law violation penalties (and collection) sufficiently large to deter violations. Although we do not intend to mandate any specific penalty, we suggest that a fine of at least $100 be assessed against the violator. We note that some states have substantially higher penalties, such as Illinois and Florida with $500 fines. Other possible measures of sufficient deterrence could

include one or more points posted against a violator's driving license. We specifically invite comment as to whether FRA should require specific minimum penalties before acceptance as a supplementary safety measure, and if so, what the minimum level of penalty should be.

The proposed rule would also require that the photo enforcement system have a means to reliably detect violations (such as loop detectors and video imaging technology) and photo or video equipment deployed to capture images sufficient to convict violators under state law. FRA does not propose to require that every public highway-rail grade crossing be equipped with cameras for continual monitoring. FRA believes the goal of deterrence may be accomplished by moving the surveillance equipment among several crossing locations, as long as the motorist perceives the strong possibility that a violation of the law will lead to sanctions. Therefore, each location should appear identical to the motorist, whether or not the camera or video equipment is actually within the housing or equivalent equipment. We invite comment as to whether FRA should specify a minimum ratio of operating equipment to empty housings (such as 25 percent), or a minimum number of monitoring hours per housing, and if so, what the minimum levels should be.

FRA also proposes to require appropriate integration, testing and maintenance of the system to provide evidence supporting enforcement. Periodic data analysis would be performed to verify that violation rates remain below a baseline level (level with train horns sounding). Also required would be signs alerting motorists that train horns are not sounded and that the crossings are monitored for compliance with the law. Public awareness efforts are critical to the success of this program. The public must be informed that the horns are not being sounded and that violation of crossing laws will result in fines and penalties.

Effectiveness: FRA's estimate of the effectiveness of photo enforcement programs is discussed below.

As discussed earlier, the Los Angeles photo enforcement demonstration project showed that a carefully administered and well publicized program of photo enforcement reduced violation rates by 92 percent, while collisions were reduced only 72 percent. This ratio, 72:92 or .78, is proposed to be used to adjust reduced violation rates to estimate projected reductions in collision rates (effectiveness) for law enforcement and education/awareness options described in Appendix B. As discussed above, it is reasonable to infer that education and legal sanctions may lack effectiveness for several segments of the population. These persons, while a small portion of the overall population, may be over represented in the population of those involved in violations and thus in collisions. As such, for law enforcement and education/awareness options violations must be reduced at least 49 percent (the measure must reduce violations by at least 49 percent) in order to realize a 38 percent reduction in the risk of collision.

Where train horns routinely sound prior to the evaluation. Effectiveness would be determined by comparison of a violation/train count ratio based on the number of violations divided by the number of train movements in any calendar quarter to the violation/train count ratio during a baseline monitoring period (minimum of four weeks if conducted without public notice or media coverage, 16 weeks if conducted with public notice or media coverage). The reduction in violations should be at least 49 percent prior to implementation of the quiet zone. Effectiveness would be considered unacceptable if, following establishment of the quiet zone, violations are greater than the original baseline level. The discussion below addresses actions when effectiveness becomes unacceptable.

Where a whistle ban is to be continued within a quiet zone. Effectiveness would be determined by comparison of a violation/train count ratio based on the number of violations divided by the number of train movements in any calendar quarter to the violation/train count ratio during a baseline monitoring period (minimum of four weeks if conducted without public notice or media coverage, 16 weeks if conducted with public notice or media coverage). The violation rate should be at least 49 percent lower than the baseline rate. Effectiveness would be considered unacceptable if, at any time following establishment of the quiet zone, the rate of violations is greater than a value less than 49 percent below the baseline level. The following discussion addresses actions when effectiveness becomes unacceptable.

Unacceptable effectiveness after establishment of quiet zone. Initial effectiveness of the photo enforcement program would be determined by calculating violation rates for at least two consecutive calendar quarters following establishment of the quiet zone. The railroad would be notified to resume sounding of the train horn if results are not acceptable. FRA and all parties required to be informed in § 222.35(b) would be informed of such notification. If, in a subsequent calendar quarter the violation rate rises above the acceptable level, the quiet zone may be continued temporarily provided the state or municipality takes reasonable steps to increase the effectiveness of the supplementary safety measure. If, in the second calendar quarter following the quarter for which results were not acceptable, the rate is still unacceptable, the quiet zone would be terminated until requalified.

Appendix B—Alternative Safety Measures

A state or local government seeking acceptance of a quiet zone under § 222.33(b) of this part may include in its proposal alternative safety measures listed in Appendix B. Credit may be proposed for closing of public highway-rail grade crossings provided the baseline risk at other crossings is appropriately adjusted by increasing traffic counts at neighboring crossings as input data to the prediction formula (except to the extent nearby grade separations are expected to carry that traffic). FRA Regional Managers for Grade Crossing Safety can assist in performing the required analysis.

As stated above, the introduction to Appendices A and B contains details regarding the decision-making process in determining whether to designate a quiet zone under § 222.33(a) or to apply for an acceptance of a quiet zone under § 222.33(b). The introduction also contains details regarding the methods to be used in performing required analyses. FRA requests comments on both the proposed process and the calculations required in that process.

The first five alternative safety measures listed are the same as those listed in Appendix A. A community may of course include one or more of these supplementary measures in its proposed program. However, if there are unique circumstances pertaining to a specific crossing or number of crossings, the specific requirements associated with a particular safety measure may be adjusted or revised in the community's proposal. As provided for in section 222.33(b), using Appendix B alternative safety measures will enable a locality to tailor the use and application of various supplementary safety measures to a specific set of circumstances. Thus, a locality may institute alternative or supplementary measures on a number of crossings within a quiet zone, but due to specific circumstances a crossing or a number of crossings may be omitted

from the list of crossings to receive those safety measures. FRA will review the proposed plan, and will approve the proposal if the community has established that the predicted accident rate applied to the quiet zone as a whole (rather than on a crossing-by-crossing basis), is reduced to a level which would be at least equivalent to that occurring with the sounding of the locomotive horn.

The following alternative safety measures may be included in a proposal for acceptance by FRA for creation of a quiet zone. Approved supplementary safety measures which are listed in Appendix A may be used for purposes of alternative safety measures. If one or more of the requirements associated with that supplementary safety measure as listed in Appendix A is revised or deleted, data or analysis supporting the revision or deletion must be provided to FRA for review.

A discussion of the following alternative safety measures may be found above in the discussion of Appendix A:

1. Temporary closure of the highway-rail crossing;
2. Four quadrant gate system;
3. Gates with medians or channelization devices;
4. One way street with gates; and
5. Photo enforcement.

6. Programmed Enforcement

An additional alternative safety measure which may be proposed for use within a specific quiet zone proposal is programmed enforcement. This safety measure involves community and law enforcement officials committed to a systematic and measurable crossing monitoring and traffic law enforcement program at the subject public highway-rail grade crossings. This may be accomplished alone, or in conjunction with the public education and awareness program. Programmed enforcement entails a sustainable law enforcement effort combined with continued crossing monitoring.

Effectiveness: In order to determine the program effectiveness, a valid baseline violation rate must first be determined through automated or systematic manual monitoring or sampling at the subject crossing or crossings. FRA believes that the effectiveness rates would be similar to those of the photo enforcement measures discussed in Appendix A, above. Procedures similar to those outlined in Appendix A for photo enforcement should be applied to assess the effectiveness of programmed law enforcement efforts.

FRA would impose conditions upon acceptance of a programmed enforcement safety measure. Included in those conditions would be monitoring and sampling to determine that the enforcement effort results in continuation of the reduction in violation rate. FRA would reserve the right to terminate the quiet zone if, after a reasonable period of time as established at the commencement of the program, improvement is not shown.

7. Public Education and Awareness

This alternative safety measure, alone, or in conjunction with Programmed Law Enforcement is a program of public education and awareness directed at motor vehicle drivers, pedestrians and residents near the railroad to emphasize the risks associated with highway-rail crossings and applicable requirements of state and local traffic laws at those crossings. This program would require establishment of a valid baseline violation rate which has been determined through automated or systematic manual monitoring or sampling at the subject crossing.

Effectiveness: Procedures similar to those outlined in Appendix A for photo enforcement should be applied to assess effectiveness of public education and awareness programs. Like Programmed Law Enforcement, a public education and awareness program must be defined, established and continued along with continued monitoring. FRA would impose conditions upon acceptance of a public education and awareness safety measure. Included in those conditions would be monitoring and sampling to determine that the education effort results in continuation of the reduction in violation rate. FRA would reserve the right to terminate the quiet zone if, after a reasonable period of time as established at the commencement of the program, improvement is not shown.

FRA recognizes the importance of public education and awareness efforts to safety at highway-rail crossings. FRA and other modal administrations and offices within the U.S. Department of Transportation have promoted the ''Always EXpect a Train'' campaign, Operation Lifesaver, Inc., and other public outreach efforts. However, FRA is concerned that the desire of communities to implement quiet zones could lead to redirection of scarce safety resources from safe community initiatives and could seriously tax the capacity of crossing safety programs provided by railroads and supported by the Federal government, leading to a net reduction in crossing safety. Accordingly, it is critical that programs proposed under this appendix represent valid new increments of effort generated from the local level where quiet zone benefits will accrue.

FRA is prepared to provide technical assistance to communities seeking to implement quiet zones, including information regarding public education and awareness resources. However FRA does not wish, nor is it able, to step into the shoes of local authorities responsible for public safety.

A second concern related to the public education and awareness option is sustaining the required level of effort. Public safety campaigns generally have temporary value when conducted over a short period or during widely separated periods of emphasis. Campaigns such as those promoting seat belt use or child safety seat use have long-term and sustained impact only to the extent the message is delivered repeatedly and with varied or innovative techniques. FRA is concerned that government entities wishing to utilize the public education and awareness option will need to find effective means of targeting the relevant audience (concentrating the impact where it will have utility) and ensuring that the message is reinforced over time. FRA seeks comments regarding communities that have had notable success in addressing particularly serious highway-rail crossing problems in their areas. To what extent did those successes derive from methods that might be transferred elsewhere? To what extent were prior very well publicized collisions the immediate impetus for those campaigns? To what extent is the public receptive to well-structured messages prior to the occurrence of one or more serious and well-publicized events?

Other Alternatives for Consideration

Wayside horns. During FRA's outreach process several commenters asked whether placement of a horn at the crossing and directed at oncoming motorists might be entertained as a supplementary safety measure. Such a device would typically be activated by the same track circuits used to detect the train's approach for purposes of other automated warning devices at the crossing. At FRA's direction, the Volpe Center has conducted an initial evaluation of two wayside horn installations at Gering, Nebraska. (The report of that evaluation will be placed in the docket of this proceeding when finalized.) This evaluation noted that use of the wayside horn in lieu of the train horn reduced net community noise impacts. However, the report also contains analysis that suggests questions (related to the loudness of the subject wayside ''horn'') regarding the

effectiveness of that particular installation in alerting motorists. Further, this evaluation did not contain adequate data or analysis to permit a determination of whether a wayside horn could fully substitute for a train-borne audible warnings. At least three questions must be answered in this regard:

1. Does the particular system provide the same quality of warning, determined by loudness at appropriate frequencies, within the motor vehicle while it is approaching the motorist's decision point.

2. As currently conceived, a single stationary horn cannot give the motorist a cue as to the direction of approach of the train or trains. To what extent does this lack of directionality detract from the effectiveness of the warning? Can wayside installation design be altered to compensate?

3. To what extent will the stationary horn suffer from the lack of credibility sometimes associated with automated warning devices, due to the fact that it is activated by the same means? Over what period of time may this problem arise, if at all?

FRA will continue to identify opportunities for developing data and analysis that may be responsive to these questions. However, for the present it is not possible to have confidence that the wayside horn can fully compensate for the absence of the train horn at any individual crossing.

Articulated gates. Concepts have been presented for articulated gates that would descend from a single apparatus to block the approach to the crossing in the normal direction of travel and continue down to block the exit lanes from the crossing (on one or both sides). The State of North Carolina, as part of an FRA-funded ''sealed corridor initiative,'' will be evaluating articulated gates as a low-cost safety measure in the context of the Next-Generation High Speed Ground Transportation Program. Articulated gates appear to be particularly attractive for two-lane roads where the highway-rail crossing is at a sufficient distance from other intersections or obstructions that could cause traffic to back up on the crossing. In principle, such gates should have the same effectiveness as other four-quadrant gate arrangements.

FRA reserves the right to expressly approve use of articulated gates as four-quadrant gate arrangements in the final rule. FRA seeks comment on the extent to which articulated gates present special issues (such as maintainability, performance in high winds, etc.) that should be addressed specifically in the final rule.

Different treatment during daylight and night-time hours. It has been suggested that variable level horns could be used at higher range during daylight hours with lower range used at night when vehicle traffic is lower and train traffic is often higher. Also, it is has been argued, lower level horns are more appropriate at night when the ambient noise level is lower than during daylight hours.

It has also been suggested that perhaps in some circumstances it might be appropriate to allow locomotive horns to be sounded during the day while banning them only at night when people are typically sleeping. This, it is argued, has the benefit of attacking the problem when it is most serious (locomotive horns disturbing the sleep of nearby residents) and when the risk is ostensibly lower (during periods in which train traffic may be higher, and motor vehicle traffic is generally less). While the NPRM addresses temporary closure of the roadway as a means of accomplishing a night-time only ban, it has been suggested that non-engineering safety measures such as increased law enforcement during the ban hours and increased public education addressing the night-time motorist population may also be appropriate. FRA is concerned that locomotive horns being sounded during daylight hours and remaining silent at other times could very well lead to fatal confusion on the part of the motorist. We note that the Florida whistle ban was a night-time only ban which resulted in substantially higher collision and injury rates than if a ban had not been in effect.

FRA requests comments on the issues surrounding different treatment during different periods of the day and night.

Regulatory Impact

Executive Order 12866 and DOT Regulatory Policies and Procedures

This proposed rule has been evaluated in accordance with existing policies and procedures and is considered ''significant'' under Executive Order 12866. It is also considered to be significant under DOT policies and procedures. See 44 FR 11034.

FRA has prepared a Regulatory Evaluation addressing the economic impact of the proposed rule. This regulatory evaluation has been placed in the public docket and is available for public inspection and copying. Copies may also be obtained by submitting a written request to the FRA Docket Clerk at Mail Stop 10, 1120 Vermont Avenue, N.W., Washington, D.C. 20950.

The problems considered by this rule are collisions and their associated casualties and property damage involving vehicles on public highways and the front ends of trains at whistle-ban grade crossings. Although accident severity and the probability of a fatal accident is most strongly related to train speed, every grade crossing where locomotive horns are not sounded is a potential accident site. In 1996 there were 79 collisions at whistle-ban crossings which resulted in 2 fatalities, 39 injuries to non-railroad employees, and 2 injuries to railroad employees.

The estimated safety benefits of this proposed rule are derived from the prevention of collisions and the resulting fatalities and injuries. Benefits also exist for railroads in terms of reduced train delay, debris removal and repairs. The costs of this rulemaking will be incurred predominantly by communities, however there are also costs to railroads and to the federal government. The benefits in terms of lives saved and injuries prevented will exceed the costs imposed on society for this proposed rule. Even under the best case scenario (falling accident rates over time) the safety benefits alone, excluding any benefit to railroads, exceed the most costly realistic scenario for community safety enhancements. FRA has a preliminary assessment of the effects to homeowners or businesses adjacent to railroads tracks, where an existing whistle-ban exists, should the community elect not to pursue a qualifying quiet zone. The results of this study are summarized in Section VII of this report, and conclude that there is not a significant long-run impact on residential housing markets. For purposes of this analysis FRA assumes that such communities will choose to take actions that have the least cost (i.e. a cost that will not exceed the costs of supplementary or alternative safety measures).

The estimated benefits of this proposed rule exceed the estimated costs over a 20 year period at a 7% discount rate. Various benefit and cost scenarios are established in the following sections. The costs are summarized in Table 1, the benefits resulting from casualties prevented are shown in Table 2. These findings are somewhat preliminary as FRA does not have detailed data for the effectiveness or costs for some of the Supplementary Safety Measures. FRA does not have adequate information on what choices a given community will make regarding either blowing the train whistle or installing or implementing alternatives

to the train whistle. FRA seeks comment and additional information from communities regarding choices they will make so that a more complete estimate of the costs and benefits of this rule may be made prior to the issuance of the final rule.

TABLE 1.—ESTIMATED COSTS [1]

Whistle Boards	$20,250
Directionality Provision	10,982,000
Installation of Gates & Lights (878 crossings) [2]	67,109,706
Increased Maintenance Gates/ Lights (878)	11,201,974
Signs	375,500
Community Planning	134,000
Government Costs	134,000
Medians (mountable at 878 crossings)	11,060,183
Medians (mountable at all crossings)	26,453,740
Police Enforcement	24,805,600
Photo Enforcement	124,955,453

[1] This table cannot be summed for a total cost of the rule, much of the cost depends on community choice. Numbers for Police and Photo Enforcement are shown, however they are also contained in the benefits section.

[2] The number of passive crossings in the data set that are assumed to require upgrades.

The estimated safety benefits of this proposed rule are derived from the prevention of accidents and the resulting fatalities and injuries. Benefits also exist for railroads in terms of reduced train delay, debris removal and repairs. Two benefit scenarios were estimated, one where the accident rate remains constant over time and one where the accident rate declines by about 4% per year.

TABLE 2.—ESTIMATED BENEFITS

Category	Effectiveness = .38 [1]	Effectiveness = .75 [2]
Collision Rate Constant	$258,641,800	$510,477,200
Collision Rate Decline	188,273,400	371,592,200

[1] Equivalent to effectiveness of train whistle at crossings with gates and lights.

[2] Equivalent to effectiveness of median barrier with frangible delineators at crossings with gates and lights.

A scenario where median barriers are installed at each crossing, signs are installed at each crossing and crossing upgrades to a minimum of gates and lights for all passive crossings would be justified on the basis of casualties prevented alone (At 2,100 crossings, total costs for all required improvements, including changes in direction of horn sound, and maintenance equal $116,395,343).

The following table identifies costs and benefits of alternative implementation scenarios:

TABLE 3.—COSTS AND BENEFITS OF ALTERNATIVE IMPLEMENTATION SCENARIOS FOR PROPOSED RULE, NET PRESENT VALUE 1999–2019 [1]

Implementation scenario	Costs monetized/ non-monetized	Benefits		Net monetized benefits
		Injury/fatality reduction	Monetized injury/ fatality	
Train whistles at crossing with gates and lights, collision rate constant [2].	$89,313,931 Indeterminate level of noise costs	(68 Fatalities) (342 Injuries)	$258,641,800	$169,327,869
Train whistles at crossing with gates and lights, collision rate decline [3].	$89,313,931 Indeterminate level of noise costs	(47 Fatalities) (235 Injuries)	188,273,400	98,959,469
Median barrier with frangible delineators at crossings with lights and gates, collision rate constant [4].	$116,395,343	(135 Fatalities) (75 Injuries)	510,477,200	394,081,857
Median barrier with frangible delineators at crossings with lights and gates, collision rate decline [5].	$116,395,343	(97 Fatalities) (463 Injuries)	371,592,200	255,196,857

[1] All figures assume 7% discount rate. The baseline to which these scenarios are compared is the continuation of the whistle-bans in the communities that now have them. See table below for categories of costs and benefits included in these monetized estimates.

[2] Assumes a 38% reduction in fatalities and injuries and an accident rate that is constant over time. Reduction in fatalities and injuries is the same 38%, the equivalent effectiveness of a train horn whether the horn is sounded or not. Costs include installation and maintenance of gates and lights at 878 passive crossings.

[3] Assumes a 38% reduction in fatalities and injuries and an accident rate that declines by about 4% per year. Reduction in fatalities and injuries is the same 38%, the equivalent effectiveness of a train horn whether the horn is sounded or not. Costs include installation and maintenance of gates and lights at 878 passive crossings.

[4] Assumes a 75% reduction (effectiveness rate of median barrier) in fatalities and injuries and an accident rate that is constant over time.

[5] Assumes a 75% reduction (effectiveness rate of median barrier) in fatalities and injuries and an accident rate that declines by about 4% per year.

TABLE 4.—CATEGORIES OF MONETIZED AND NON-MONETIZED COSTS AND BENEFITS INCLUDED IN ABOVE ANALYSIS

Category		Monetized	Non-monetized
Costs	Train whistles at crossings with gates and lights.	—Whistle boards (see § 222.21) —Directionality provision (see § 229.129) —Upgrades to gates and lights at passive crossings	—Indeterminate level of noise costs.

TABLE 4.—CATEGORIES OF MONETIZED AND NON-MONETIZED COSTS AND BENEFITS INCLUDED IN ABOVE ANALYSIS—Continued

Category		Monetized	Non-monetized
	Supplementary safety measures	—Upgrades to gates and lights at passive crossings. —Community costs —Government costs —Whistle boards —Directionality —Supplementary Safety Measures and Alternative Safety Measures (see § 222.33)	None.
Benefits	Train whistles at crossings with gates and lights.	—Reduction in injuries and fatalities	—Community noise reduction through whistle boards and the directionality provision.
	Supplementary safety measures	—Reduction in injuries and fatalities (greater reduction than train horn is likely as all SSM's have higher effectiveness rate than train horn).	—Reduced train delay, debris removal and repairs. —Collisions/incidents involving pedestrians and bicyclists. —Incidents where car struck train at behind the first five cars. —Community noise reduction through quiet zones in communities where state law currently requires the use of the train horn.

FRA recognizes that it is possible to imagine a situation under which the disbenefits of the proposed rule might exceed the benefits as applied to an individual community. FRA does not believe that this condition would occur through excessive expenditures on supplementary of alternative safety measures, since those measures can be scaled to the safety need within the quiet zone (taken as a whole) and since most such measures will yield benefits well in excess of the value of the train horn if applied to all crossings.

However, should a community elect NOT to implement the proffered alternatives, and should the negative societal impact of train horns be valued in excess of the safety benefits of the horn, a net disbenefit would, by definition, occur. This situation might arise where the persons adversely affected by the train noise constituted a minority in the community, and the community as a whole did not wish to invest in the alternatives. Thus far, vocal minorities in affected communities have succeeded in having the train horn silenced despite negative safety impacts for motor vehicle users in the community at large. Thus, it does not seem likely that they will be wholly without influence in the future. However, given the competing demands on local elected decision-makers, underinvestment in alternatives could occur. FRA requests comment on any options that may exist, consistent with the statutory mandate we are implementing, to address this concern. In this regard, FRA notes the availability of the Federal funding, through the Surface Transportation Program, which State departments of transportation might elect to commit on behalf of the affected minority should county or municipal institutions not be responsive.

Regulatory Flexibility Act

The Regulatory Flexibility Act of 1980 (5 U.S.C. 601 *et seq.*) requires a review of final rules to assess their impact on small entities unless the Secretary certifies that a final rule will not have a significant economic impact on a substantial number of small entities. FRA is not able to certify that this proposed rule would not have a significant economic impact on a substantial number of small entities. FRA has performed an Initial Regulatory Flexibility Assessment (IRFA) on small entities that potentially can be affected by this proposed rule. The IRFA is summarized in this preamble as required by the Regulatory Flexibility Act. Copies of the full IRFA are available as an appendix to the Regulatory Impact Analysis, and is available in the public docket of this proceeding. Written public comments that will clarify what the impacts will be for the affected small entities are requested. Comments must be identified as responses to the IRFA, and must be filed by the deadlines for comments on the NPRM provided above.

This is a proposed rule which essentially is a safety rule that implements as well as minimizes the potential negative impacts of a Congressional mandate to blow train whistles and horns. It provides provisions for exceptions, and it provides communities with the ability to reduce the impact of the locomotive horns within their jurisdictions. However, this proposed rule will be responsible for an amount of impact on small entities, no matter how the outcome for each whistle ban is determined. This basically means that if a community elects to simply follow the mandate, and become subject to whistle blowing at crossings where a whistle ban had been prior, then there will be a noise impact to any potential small business that exists along that route. If a community elects to implement supplementary safety measures that are necessary to establish a ''quiet zone,'' then the governmental jurisdiction will be impacted by the cost of such program or system.

Some communities believe that the sounding of train whistles at every crossing is excessive and an infringement on community quality of life, and therefore have enacted ''whistle bans'' that prevent the trains from sounding their whistles entirely, or during particular times (usually at night). FRA is concerned that with the increased risk at grade crossings where train whistles are not sounded, or another means of warning utilized, collisions and casualties may increase significantly. In 1996 at least 52 percent of the 79 grade crossing collisions that occurred at crossings with whistle bans in place, occurred in a small community

where the governmental jurisdiction is considered to be a small entity.

FRA is concerned that there are potential small entities that might be affected by this proposal. Hence, FRA encourages small businesses, small railroads, and governmental jurisdictions that are considered to be small entities to participate in the comment process if they feel they will be adversely impacted by this proposed rule. The Agency encourages such small entities to submit written comment to the docket and/or participate in one of the public hearings.

FRA's Regulatory Impact Analysis notes that the costs of this proposed rulemaking will predominately be on the governmental jurisdictions of communities. Thus, FRA is concerned about potential adverse economic impact on small entities which are ''small governmental jurisdictions.'' As defined by the Small Business Administration (SBA) this term means governments of cities, counties, towns, townships, villages, school districts, or special districts with a population of less than fifty thousand. Currently, FRA has knowledge of Whistle Bans in 265 communities.

FRA has recently published an interim policy which establishes ''small entity'' as being railroads which meet the line haulage revenue requirements of a Class III railroad. As defined by 49 CFR 1201.1–1, Class III railroads are those railroads who have annual operating revenues of $20 million per year or less. Hazardous material shippers or contractors that meet this income level will also be considered as small entities. FRA is proposing to use this definition of small entity for this rulemaking. Since this is still considered to be an alternative definition, FRA is using this definition in consultation with the Office of Advocacy, SBA, and therefore requests public comments to the docket for its use.

The IRFA concludes that only a few small railroads might be minimally impacted by this proposed rule. In addition, some small businesses that operate along or nearby rail lines that currently have whistle bans in place that potentially may not after the implementation of this proposed rule, could be moderately impacted. The most significant impacts from this proposed rule will be on 265 governmental jurisdictions whose communities currently have either formal or informal whistle bans in place. FRA estimates that approximately 70 percent (*i.e.* 186 communities) of these governmental jurisdictions are considered to be small entities. Alternative options for complying with this proposed rule include allowing the train whistle to be blown. This alternative has no direct costs associated with it for the governmental jurisdiction. Other alternatives include ''gates with median barriers'' which are estimated to cost $11,070 for the median barrier. Four-quadrant gate system is estimated to cost $244,000, and have an annual maintenance of $2,500–$5,000. ''Photo enforcement is estimated to cost $55,000–$75,000, and have an annual costs of $20,000–$30,000. A ''law enforcement'' program is estimated to cost $3,000 annually, and it has an expected annual benefit $10,600. An alternative that does not impact the governmental jurisdiction with any costs is running trains at speeds of 15 miles per hour or less with flagging being performed at the crossing. Finally, FRA has not limited compliance to the lists provided in Appendix A or Appendix B of the proposed rule. The NPRM provides for supplementary safety measures that might be unique or different. For such an alternative an analysis would have to accompany the option that would demonstrate that the number of motorists that violate the crossing is equivalent of less than that of blowing the whistle. FRA intends to rely on the creativity of communities to formulate solutions which will work for that community. FRA is aware that there are a few Class III railroads that are subject to local whistle bans. This number is estimated to be less than ten.

FRA does not know how many small businesses are located within a distance of the affected highway-rail crossings where the noise from the whistle blowing could be considered to be nuisance and bad for business. Concerns have been advanced by owners and operators of hotels, motels and some other establishments as a result of numerous town meetings and other outreach sessions in which FRA has participated during development of this proposed rule. If supplementary safety measures are implemented to create a quiet zone then such small entities should not be impacted. Hence FRA requests comments to the docket from small businesses that feel they will be adversely impacted by this proposed rule.

In the IRFA FRA discusses the ways in which each type of small entity could be affected. However, since FRA does not know the manner which each affected community will elect to proceed, it is not possible to quantify or estimate the total or average cost for each type of small entity. Comments and input from potentially affected small entities will assist us in being able to determine the real impact of this proposed rule.

Paperwork Reduction Act

The information collection requirements in this proposed rule have been submitted for approval to the Office of Management and Budget (OMB) under the Paperwork Reduction Act of 1995, 44 U.S.C. 3501 *et seq.* The sections that contain the new information collection requirements and the estimated time to fulfill each requirement are as follows:

CFR section	Respondent universe	Total annual responses	Average time per response	Total annual burden hours	Total annual burden cost
222.11—Petitions for Waivers	270 communities	92 petitions	1 hour	92 hours	$2,208
222.33—Establishment of quiet zones	(see § 222.35)	(see § 222.35)	(see § 222.35)	(see § 222.35)	(see § 222.35)
—Community Designation	270 communities	97 applications	40 hours	3,880 hours	116,400
—FRA acceptance	270 communities	1,600 signs	1 hour	1,600 hours	38,400
—Requirement for advance warning signs					
222.35—Notice and information requirements:					
—Notifications	280 communities	383 notifications	20 minutes	128 hours	3,840
—U.S. DOT–AAR National Highway-Rail Grade Crossing Inventory Form (FRA F 6180.71).	280 communities	800 forms 85 letters	1 hour 15 minutes	821 hours	24,630
222.39—Quiet zone duration:					
—222.39(a)—Notification	N/A (requirement will not take effect until 5 years after the rule's publication).				
—222.39(b)—Notification	N/A (requirement will not take effect until 6 years after the rule's publication).				

CFR section	Respondent universe	Total annual responses	Average time per response	Total annual burden hours	Total annual burden cost
—222.39(c)—Notification	N/A (requirement will not take effect until 6 years after the rule's publication).				
222.43—Development and approval of new supplementary safety measures:					
—Applications	270 communities	54 applications	40 hours	2,160 hours	64,800
—Appeal letter	54 communities	1 letter	1 hour	1 hour	30
222.45—Communities with pre-existing restrictions on use of locomotive horns.	270 communities	73 documents	8 hours	584 hours	17,520
Appendix A:					
—Temporary closure of a public highway-rail grade crossing.	270 communities	60 signs 20 signs daily	1 hour	60 hours	1,440
—Photo Enforcement	270 communities	10 reports	40 hours	400 hours	12,000
Appendix B:					
—Alternative Safety Measures	270 communities	5 reports	40 hours	200 hours	6,000

All estimates include the time for reviewing instructions; searching existing data sources; gathering or maintaining the needed data; and reviewing the information. Pursuant to 44 U.S.C. 3506(c)(2)(B), FRA solicits comments concerning: whether these information collection requirements are necessary for the proper performance of the function of FRA, including whether the information has practical utility; the accuracy of FRA's estimates of the burden of the information collection requirements; the quality, utility, and clarity of the information to be collected; and whether the burden of collection of information on those who are to respond, including through the use of automated collection techniques or other forms of information technology, may be minimized.

FRA believes that soliciting public comment will promote its efforts to reduce the administrative and paperwork burdens associated with the collection of information mandated by Federal regulations. In summary, FRA reasons that comments received will advance three objectives: (i) reduce reporting burdens; (ii) ensure that it organizes information collection requirements in a ''user friendly'' format to improve the use of such information; and (iii) accurately assess the resources expended to retrieve and produce information requested. *See* 44 U.S.C. 3501.

Comments must be received no later than March 13, 2000. Organizations and individuals desiring to submit comments on the collection of information requirements should direct them to the Office of Management and Budget, Attention: Desk Officer for the Federal Railroad Administration, Office of Information and Regulatory Affairs, Washington, DC 20503, and should also send a copy of their comments to Robert Brogan, Federal Railroad Administration, RRS–211, Mail Stop 25, 400 7th Street, SW, Washington. DC 20590.

OMB is required to make a decision concerning the collection of information requirements contained in this proposed rule between 30 and 60 days after publication of this document in the **Federal Register**. Therefore, a comment to OMB is best assured of having its full effect if OMB receives it within 30 days of publication. The final rule will respond to any OMB or public comments on the information collection requirements contained in this proposal.

FRA cannot impose a penalty on persons for violating information collection requirements which do not display a current OMB control number, if required. FRA intends to obtain current OMB control numbers for any new information collection requirements resulting from this rulemaking action prior to the effective date of a final rule. The OMB control number, when assigned, will be announced by separate notice in the **Federal Register**.

For information or a copy of the paperwork package submitted to OMB please contact Robert Brogan at 202–632–3318.

Environmental Impact

FRA is evaluating these proposals in accordance with its procedures for ensuring full consideration of the environmental impact of FRA actions, as required by the National Environmental Policy Act (42 U.S.C. 4321 *et seq.*), other environmental statutes, Executive Orders, and DOT Order 5610.1c.

The principal environmental effect and potentially significant impact of these proposals is additional horn noise where there whistle bans currently exist. FRA has studied the potential costs of noise from locomotive horns by examining residential property values. Other studies have also been conducted on the value of noise impacts captured in residential prices, including studies by the FAA. FAA conducted studies that concluded that residential property values were diminished from exposure to substantial quantities of aircraft noise. FAA studied significant changes in aircraft generated noise levels in consideration of actions that would change the total noise emitted by each aircraft. The DEIS discusses the substantial estimated costs associated with given increments of noise over a 24-hour period in the FAA studies. FRA may be faced with a significantly different question, because this regulation has the potential to add incremental noise at certain locations to the considerable noise, vibration and other impacts generated by train locomotives and train movements. In studying residential property values where the horn noise was added as an increment to noise from train operations, FRA found that it did not produce a significant lasting effect on residential prices. The DEIS seeks to elicit comment as to the potential relevance of the FAA studies to the current issue and the relative weight they should be accorded given the findings of the train horn property value research.

These proposals also contain various provisions that have the potential to reduce existing train horn noise exposure over time. The provision limiting the distance over which horn sounding would occur could reduce the total amount of horn noise generated. Because this provision is proposed to be implemented slowly, the potential benefits are indeterminate. The provision for a maximum horn sound level to the front and to the side of locomotives has the potential to greatly reduce horn noise generated depending upon the limits selected. Unlike the sounding distance provision, this is proposed to occur a three-year period

and the value of any potential benefit is indeterminate, however it is expected to be significant (2 to 4 million people). Finally, these proposals contain provisions that would make it possible for many communities, currently exposed to train horn noise, to establish quiet zones and thus relieve themselves of noise exposure. Any potential benefit from these new quiet zones is indeterminate, as it is impossible to estimate how many would be implemented and when; however, FRA has noted the interest of many communities impacted by recent mergers in abating the train horn impacts of recent changes in traffic flows.

FRA has prepared a draft environmental impact statement (DEIS) analyzing the environmental impacts associated with these proposals. The DEIS is being issued concurrently with this NPRM. Copies of the DEIS are being distributed to organizations and individuals who participated in the environmental scoping process and those who filed comments in the pre-rulemaking stage of this proceeding. The DEIS is also available on FRA's Internet Site *www.fra.dot.gov.* or from the FRA at the following address: David Valenstein, Office of Railroad Development, FRA, 400 Seventh Street, SW. (Mail Stop 20), Washington, DC 20590. The public comment period on the DEIS and this NPRM will run concurrently. Interested parties may comment on the DEIS, the NPRM, or both documents. Because FRA is soliciting comments on both the DEIS and this NPRM, separate public dockets have been established for each. Interested parties wishing to comment on the DEIS should include the docket number for the environmental docket, ''Docket Number FRA–1999–6440'' on the first page of their comments. Those persons wishing to comment on this NPRM should include the docket number for this rulemaking proceeding, ''Docket Number FRA–1999–6439'' on the first page of their comments.

Federalism Implications

Executive Order 13132, entitled, ''Federalism,'' issued on August 4, 1999, requires that each agency ''in a separately identified portion of the preamble to the regulation as it is to be issued in the **Federal Register**, provides to the Director of the Office of Management and Budget a federalism summary impact statement, which consists of a description of the extent of the agency's prior consultation with State and local officials, a summary of the nature of their concerns and the agency's position supporting the need to issue the regulation, and a statement of the extent to which the concerns of State and local officials have been met; * * *.''

FRA will adhere to Executive Order 13132 when issuing a final rule in this proceeding. FRA has already taken the opportunity to consult extensively with state and local officials prior to issuance of this NPRM, and we will, of course, take very seriously the concerns and views expressed by State and local officials as the public comment stage of this rulemaking proceeds. FRA staff will be providing briefings to many State and local officials and organizations during the comment period to encourage full public participation in this rulemaking. As discussed earlier in this preamble, because of the great interest in this subject throughout various areas of the country, FRA has been involved in an extensive outreach program to inform communities which presently have whistle bans of the effect of the Act and the regulatory process. Since the passage of the Act, FRA headquarters and regional staff has met with a large number of local officials. FRA has also held a number of public meetings to discuss the issues and to receive information from the public. In addition to local citizens, both local and state officials attended and participated in the public meetings. Additionally, FRA took the unusual step of establishing a public docket before formal initiation of rulemaking proceedings in order to enable citizens and local officials to comment on how FRA might implement the Act and to provide insight to FRA. FRA received comments from representatives of Portland, Maine; Maine Department of Transportation; Acton, Massachusetts; Wisconsin's Office of the Commissioner of Railroads; a Wisconsin state representative; a Massachusetts state senator; the Town of Ashland, Massachusetts; Bellevue, Iowa; and the mayor of Batavia, Illinois.

Since passage of the Act in 1994, FRA has consulted and briefed representatives of the American Association of State Highway and Transportation Officials (AASHTO), the National League of Cities, National Association of Regulatory Utility Commissioners, National Conference of State Legislatures, and others. Additionally we have provided extensive written information to all United States Senators and a large number of Representatives with the expectation that the information would be shared with interested local officials and consitituents.

FRA has been in close contact with, and has received many comments from Chicago area municipal groups representing suburban areas in which, for the most part, locomotive horns are not routinely sounded. The Chicago area Council of Mayors, which represents over 200 cities and villages with over 4 million residents outside of Chicago, provided valuable information to FRA as did the West Central Municipal Conference and the West Suburban Mass Transit District, both of suburban Chicago.

Another association of suburban Chicago local governments, the DuPage [County] Mayors and Managers Conference, provided comments and information. Additionally, FRA officials have met with Members of Congress, including Senator Kennedy, and Representatives Rick Boucher, Henry Hyde, William Lipinsky, Martin Meehan, Tim Roemer and John Tierney, who have invited FRA to their districts and have provided citizens and local officials with the opportunity to express their views on this rulemaking process. These exchanges, and others conducted directly through FRA's regional crossing managers, have been very valuable in identifying the need for flexibility in preparing the proposed rule. For further discussion regarding the nature of state and local concerns please see paragraph F. ''Comments received by FRA.'' above.

Under 49 U.S.C. 20106, issuance of this regulation preempts any State law, rule, regulation, order, or standard covering the same subject matter, except a provision necessary to eliminate or reduce an essentially local safety hazard, that is not incompatible with Federal law or regulation and does not unreasonably burden interstate commerce.

Compliance With the Unfunded Mandates Reform Act of 1995

Pursuant to the Unfunded Mandates Reform Act of 1995 (Public Law 104–4) each federal agency ''shall, unless otherwise prohibited by law, assess the effects of Federal Regulatory actions on State, local, and tribal governments, and the private sector (other than to the extent that such regulations incorporate requirements specifically set forth in law).'' Section 201. Section 202 of the Act further requires that ''before promulgating any general notice of proposed rulemaking that is likely to result in promulgation of any rule that includes any Federal mandate that may result in the expenditure by State, local, and tribal governments, in the aggregate, or by the private sector, of $ 100,000,000 or more (adjusted annually for inflation) in any 1 year, and before promulgating any final rule for which a general notice of proposed rulemaking was published, the agency shall prepare a written statement * * *'' detailing the effect on

State, local and tribal governments and the private sector. The proposed rules issued today will not result in the expenditure, in the aggregate, of $100,000,000 or more in any one year, and thus preparation of a statement is not required.

List of Subjects

49 CFR Part 222

Administrative practice and procedure, Penalties, Railroad safety, Reporting and recordkeeping requirements.

49 CFR Part 229

Locomotives, Penalties, Railroad safety.

The Proposed Rule

In consideration of the foregoing, FRA proposes to amend chapter II of title 49, Code of Federal Regulations as follows:

1. Part 222 is added to read as follows:

PART 222—USE OF LOCOMOTIVE HORNS AT PUBLIC HIGHWAY-RAIL GRADE CROSSINGS

Subpart A—General

Sec.
222.1 Purpose and scope.
222.3 Application.
222.5 Preemptive effect.
222.7 Definitions.
222.9 Penalties.
222.11 Petitions for waivers.
222.13 Responsibility for compliance.

Subpart B—Use of Locomotive Horns

222.21 When to use locomotive horns.
222.23 Emergency and other uses of locomotive horns.

Subpart C—Exceptions to Use of the Locomotive Horn

222.31 Train operations which do not require sounding of locomotive horns at individual public highway-rail grade crossings.
222.33 Establishment of quiet zones.
222.35 Notice and information requirements.
222.37 Quiet zone implementation.
222.39 Quiet zone duration.
222.41 Supplementary and alternative safety measures.
222.43 Development and approval of new supplementary safety measures.
222.45 Communities with pre-existing restriction on use of locomotive horns.

Appendix A to Part 222—Approved Supplemental Safety Measures

Appendix B to Part 222—Alternative Safety Measures

Appendix C to Part 222—Conditions Not Requiring Additional Safety Measures

Authority: 49 U.S.C. 20103, 20107 and 20153; 28 U.S.C. 2461 note; and 49 CFR 1.49.

Subpart A—General

§ 222.1 Purpose and scope.

(a) The purpose of this part is to increase safety at public highway-rail grade crossings by ensuring that locomotive horns are sounded when trains approach and pass through public highway-rail grade crossings.

(b) This part prescribes standards for sounding locomotive horns when locomotives approach and pass through public highway-rail grade crossings. This part further provides standards for exempting from the requirement to sound the locomotive horn certain categories of rail operations and categories of public highway-rail grade crossings.

§ 222.3 Application.

This part applies to every railroad with public highway-rail grade crossings on its line of railroad, except:

(a) A railroad that exclusively operates freight trains exclusively on track which is not part of the general railroad system of transportation; and

(b) Rapid transit operations within an urban area that are not connected to the general railroad system of transportation.

§ 222.5 Preemptive effect.

Under 49 U.S.C. 20106, issuance of this part preempts any State law, rule, regulation, or order covering the same subject matter, except an additional or more stringent law, regulation, or order that is necessary to eliminate or reduce an essentially local safety hazard; is not incompatible with a law, regulation, or order of the United States Government; and does not unreasonably burden interstate commerce.

§ 222.7 Definitions.

As used in this part—

Administrator means the Administrator of the Federal Railroad Administration or the Administrator's delegate.

Barrier curb means a highway curb designed to discourage a motor vehicle from leaving the roadway. Such curb is more than six inches but not more than nine inches high with a rounded top edge and is used where highway speeds do not exceed 40 miles per hour. The barrier curb is highly visible and provided with sloped end treatments. Additional design specifications are determined by the standard traffic design specifications used by the governmental entity constructing the barrier curb.

Channelization device means one of a continuous series of highly visible obstacles placed between opposing highway lanes designed to alert or guide traffic around an obstacle or to direct traffic in a particular direction. Channelization devices must be at least 2.5 feet high and placed at least every seven feet. End treatments, in the case of rigid channelization devices, should be determined by reference to the governmental entity's own standard traffic design specifications.

Effectiveness rate means the effectiveness of a supplementary safety measure in reducing the probability of a collision at a public highway-rail grade crossing. (Effectiveness is indicated by a number between zero and one which represents the reduction of the probability of a collision as a result of the installation of a supplementary safety measure when compared to the same crossing equipped with conventional automated warning systems of flashing lights, gates and bells. Zero effectiveness means that the supplementary safety measure provides no reduction in the probability of a collision (there is no effectiveness) while an effectiveness rating of one means that the supplementary safety measure is totally effective in reducing collisions. Measurements between zero and one reflect the percentage by which the supplementary safety measure reduces the probability of a collision. Thus, a supplementary safety measure with an effectiveness of .38 reduces the probability of a collision by 38 percent.) FRA has determined that collision probabilities increase an average of 62 percent when locomotive horns are silenced. Thus, generally, a supplementary safety measure should have an effectiveness of at least .38 (reducing the probability of a collision by at least 38 percent) in order to compensate for this 62 percent increase.

FRA means the Federal Railroad Administration.

Locomotive horn means a locomotive air horn, steam whistle, or similar audible warning device mounted on a locomotive or control cab car. The terms ''locomotive horn'', ''train whistle'', ''locomotive whistle'', and ''train horn'' are used interchangeably in the railroad industry.

Median means the portion of a divided highway separating the travel ways for traffic in opposite directions. A median is bounded by mountable or barrier curbs.

Mountable curb means a highway curb designed to permit a motor vehicle to leave a roadway when required. It is a curb not more than six inches high, with a well rounded top edge. Additional design specifications are determined by the standard traffic design specifications used by the

governmental entity constructing the mountable curb.

Positive train control territory means a line of railroad on which railroad operations are governed by a train control system capable of determining the position of the train in relation to a public highway-rail grade crossing and capable of computing the time of arrival of the train at the crossing, resulting in the automatic operation of the locomotive horn (or automatic prompting of the locomotive engineer) such that the horn is sounded at a predetermined time prior to the locomotive's arrival at the crossing.

Public highway-rail grade crossing means a location where a public highway, road, or street, including associated sidewalks or pathways crosses one or more active railroad tracks at grade.

Quiet zone means a segment of a rail line within which is situated one, or a number of consecutive public highway-rail crossings at which locomotive horns may not be routinely sounded.

Railroad means any form of nonhighway ground transportation that runs on rails or electromagnetic guideways and any entity providing such transportation, including:

(1) Commuter or other short-haul railroad passenger service in a metropolitan or suburban area and commuter railroad service that was operated by the Consolidated Rail Corporation on January 1, 1979; and

(2) High speed ground transportation systems that connect metropolitan areas, without regard to whether those systems use new technologies not associated with traditional railroads; but does not include rapid transit operations in an urban area that are not connected to the general railroad system of transportation.

Supplementary safety measure means a safety system or procedure established in accordance with this part which is provided by the appropriate traffic control authority or law enforcement authority and that is determined by the Administrator to be an effective substitute for the locomotive horn in the prevention of highway-rail casualties. Appendix A to this part lists such measures.

Whistle board means a post or sign directed toward oncoming trains and bearing the letter ''W'' or equivalent symbol, erected at a distance from the next public highway-rail grade crossing which indicates to the locomotive engineer that the locomotive horn should be sounded beginning at that point.

§ 222.9 Penalties.

Any person who violates any requirement of this part or causes the violation of any such requirement is subject to a civil penalty of least $500 and not more than $11,000 per violation, except that: Penalties may be assessed against individuals only for willful violations, and, where a grossly negligent violation or a pattern of repeated violations has created an imminent hazard of death or injury to persons, or has caused death or injury, a penalty not to exceed $22,000 per violation may be assessed. Each day a violation continues shall constitute a separate offense. Any person who knowingly and willfully falsifies a record or report required by this part may be subject to criminal penalties under 49 U.S.C. 21311 (formerly codified in 45 U.S.C. 438(e)).

§ 222.11 Petitions for waivers.

(a) Except for petitions filed pursuant to paragraph (b) of this section, all petitions for a waiver of any provision of this part must be submitted jointly by the railroad owning, or controlling operations of the railroad tracks crossing the public highway-rail grade crossing and by the appropriate traffic control authority or law enforcement authority (public authority) having jurisdiction over the public highway, street, road, pedestrian sidewalk or pathway crossing the railroad tracks.

(b) If the railroad and the appropriate public authority can not reach agreement to file a joint petition, either party may file a petition for a waiver, however the filing party shall, in its petition, specify the steps it has taken in an attempt to reach agreement with the other party and shall provide the other party with a copy of the petition filed with the FRA.

(c) Each petition for a waiver of this part must be filed in the manner required by 49 CFR Part 211.

(d) If the Administrator finds that a waiver of compliance with a provision of this part is in the public interest and that safety of highway and railroad users will not be diminished if the petition is granted, the Administrator may grant the waiver subject to any conditions the Administrator deems necessary.

§ 222.13 Responsibility for compliance.

Although duties imposed by this part are generally stated in terms of the duty of a railroad, any person, including a contractor for a railroad, or a local or state governmental entity that performs any function covered by this part, must perform that function in accordance with this part.

Subpart B—Use of Locomotive Horns

§ 222.21 When to use locomotive horns.

(a) Except as provided in this part, the locomotive horn on the lead locomotive of a train, lite locomotive consist, individual locomotive or lead cab car shall be sounded when such locomotive or lead car is approaching and passes through each public highway-rail grade crossing. Sounding of the locomotive horn with two long, one short, and one long blast shall be initiated at the location required in paragraph (b) of this section and shall be repeated or prolonged until the locomotive or train occupies the crossing.

(b) Although preempted by this part, state requirements in effect on [the effective date of the final rule] which govern the location where, or time in which, locomotive horns must be sounded in advance of a public highway-rail grade crossing, shall be used as guidelines under this rule until such time as the railroad changes the maximum authorized speed for that portion of track at the grade crossing. At that time the railroad shall, subject to the one-quarter mile limitation contained in paragraph (e) of this section, either:

(1) Place whistle boards at a distance from the next crossing equal to the distance traveled by a train in 20 seconds while operating at the maximum speed allowed for any train operating on the track in that direction of movement; or

(2) Ensure by other methods that the locomotive horn is sounded no less than 20, nor more than 24 seconds before the locomotive enters the crossing.

(c) If, as of [the effective date of the final rule], there are no state requirements that locomotive horns be sounded at a specific distance in advance of the public highway-rail grade crossing, railroads shall, subject to the ¼ mile limitation contained in paragraph (e) of this section, either:

(1) Place whistle boards at a distance from the next crossing equal to the distance traveled by a train in 20 seconds while operating at the maximum speed allowed for any train operating on the track in that direction of movement; or

(2) Ensure by other methods that the locomotive horn is sounded no less than 20, nor more than 24 seconds before the locomotive enters the crossing.

(d) Each railroad shall, in the manner provided in paragraph (c) of this section, promptly adjust the location of each whistle board to reflect changes in maximum authorized track speeds, except where all trains operating over that public highway-rail grade crossing

are equipped to be responsive to a positive train control system.

(e) In no event shall a locomotive horn sounded in accordance with paragraph (a) of this section be sounded more than one-quarter mile (1,320 feet or 403 meters) in advance of a public highway-rail grade crossing.

§ 222.23 Emergency and other uses of locomotive horns.

(a)(1) Nothing in this part is intended to prevent an engineer from sounding the locomotive horn to provide a warning to vehicle operators, pedestrians, trespassers or crews on other trains in an emergency situation if, in the engineer's sole judgment, such action is appropriate in order to prevent imminent injury, death or property damage.

(2) Establishment of a quiet zone does not preclude the sounding of locomotive horns in emergency situations, nor does it impose a legal duty to sound the locomotive horn in such situations.

(b) Nothing is this part restricts the use of the locomotive horn to announce the approach of the train to roadway workers in accordance with a program adopted under part 214 of this Chapter, or where active warning devices have malfunctioned and use of the horn is required by one of the following sections of this Chapter: §§ 234.105; 234.106; or 234.107.

Subpart C—Exceptions to Use of the Locomotive Horn

§ 222.31 Train operations which do not require sounding of horns at individual public highway-rail grade crossings.

(a) Locomotive horns need not be sounded at individual public highway-rail grade crossings if the maximum authorized operating speed (as established by the railroad) for that segment of track is 15 miles per hour or less and properly equipped flaggers (as defined in 49 CFR 234.5) provide warning of approaching trains to motorists.

(b) This paragraph does not apply where active warning devices have malfunctioned and use of the horn is required by 49 CFR 234.105, 234.106, or 234.107.

§ 222.33 Establishment of quiet zones.

(a) *Community designation.* A state or local government may designate a quiet zone by implementing one or more supplementary safety measures identified in Appendix A of this part at each public highway-rail grade crossing within the quiet zone and by providing the information and notifications described under § 222.35.

(b) *FRA acceptance.* (1) A state or local government may apply to FRA's Associate Administrator for Safety for acceptance of a quiet zone, within which one or more safety measures identified in Appendix A or Appendix B of this part will be implemented. The state or local government's application to FRA's Associate Administrator for Safety must contain sufficient detail concerning the present engineering improvements at the public highway-rail grade crossings proposed to be included in the quiet zone, together with detailed information pertaining to the proposed supplementary and alternative safety measures to be implemented at each crossing. The application must conform with the requirements contained in Appendix B of this part, and must be based on the calculations discussed in the Introduction to Appendices A and B of this part. The application must also contain a commitment to implement the proposed safety measures within the proposed quiet zone. The state or local government must demonstrate through data and analysis that implementation of these measures will effect a reduction in risk at public highway-rail grade crossings within the quiet zone (viewing risk in the aggregate rather than on a crossing-by-crossing basis) sufficient to fully compensate for the absence of the warning provided by the locomotive horn. For purposes of this paragraph, risk will be viewed in terms of the quiet zone as a whole, rather than at each individual grade crossing. The aggregate reduction in predicted collision risk for the quiet zone as a whole must be shown to compensate for the lack of a locomotive horn.

(2) The FRA Associate Administrator for Safety may accept the proposed quiet zone, may accept the proposed quiet zone under additional conditions designed to ensure that the safety measures fully compensate for the absence of the warning provided by the locomotive horn, or may reject the proposed quiet zone if, in the Associate Administrator's judgment, the proposed safety measures do not fully compensate for the absence of the warning provided by the locomotive horn.

(c) *Quiet zone in which supplementary or alternative safety measures are not necessary.* A state or local government may create a quiet zone under this paragraph if the crossings within the quiet zone conform to the requirements contained in Appendix C of this part. Appendix C of this part describes those categories of crossings which the Administrator has determined do not present a significant risk with respect to loss of life or serious personal injury if the locomotive horn is not sounded.

(d) *Minimum length.* The minimum length of a quiet zone established under this part shall be one-half mile (2,640 feet or 805 meters) along the length of railroad right-of-way.

(e) *Requirement for active grade crossing warning devices.* Except as provided in § 222.31, and paragraph (c) of this section, each public highway-rail grade crossing in a quiet zone established or accepted under this section must be equipped with active grade crossing warning devices comprising both flashing lights and gates which control traffic over the crossing and that conform to the standards contained in the Manual on Uniform Traffic Control Devices issued by the Federal Highway Administration. Installation or upgrading of such devices is not regarded as implementation of supplementary safety measures under this part and is not credited toward the compensating reduction in risk referenced in paragraph (b) of this section, except to the extent the new warning systems exceed the standards of the MUTCD and conform to requirements for supplementary safety measures contained in Appendix A of this part.

(f) *Requirement for advance warning signs.* Each highway approach to each public highway-rail grode crossing at which locomotive horns are not routinely sounded pursuant to this part shall be equipped with an advance warning sign advising the motorist that train horns are not sounded at the crossing.

§ 222.35 Notice and information requirements.

(a) A state or local government designating a quiet zone under § 222.33(a) shall provide written notice, by certified mail, return receipt requested, of such designation to: all railroads operating over the public highway-rail grade crossings within the quiet zone; the highway or traffic control authority or law enforcement authority having control over vehicular traffic at the crossings within the quiet zone; the state agency responsible for highway and road safety; and the FRA Associate Administrator for Safety.

(b) Upon acceptance by the FRA Associate Administrator for Safety of a quiet zone proposed by a state or local government under § 222.33(b), such state or local government shall provide written notice, by certified mail, return receipt requested, of such acceptance to: all railroads operating over the public highway-rail grade crossings within the quiet zone; the highway or traffic

control authority or law enforcement authority having control over vehicular traffic at the crossings within the quiet zone; and the state agency responsible for highway and road safety.

(c) A state or local government creating a quiet zone under § 222.33(c), shall provide written notice, by certified mail, return receipt requested, of such designation to: all railroads operating over the public highway-rail grade crossings within the quiet zone; the highway or traffic control authority or law enforcement authority having control over vehicular traffic at the crossings within the quiet zone; the state agency responsible for highway and road safety; and the FRA Associate Administrator for Safety.

(d) The following information pertaining to every quiet zone must be submitted to the FRA Associate Administrator for Safety:

(1) An accurate and complete U.S. DOT–AAR National Highway-Rail Grade Crossing Inventory Form, FRA F6180.71, (Inventory Form) (available through the FRA Office of Safety Analysis, Mail Stop 17, 1120 Vermont Avenue, NW., Washington, DC 20590) for each public highway-rail grade crossing within the quiet zone dated within six months prior to designation or FRA acceptance of the quiet zone;

(2) An accurate, complete and current Inventory Form reflecting supplementary and alternative safety measures in place upon establishment of the quiet zone; and

(3) The name and title of the state or local officer responsible for monitoring compliance with the requirements of this part and the manner in which that person can be contacted.

§ 222.37 Quiet zone implementation.

(a) A quiet zone established under this part shall not be implemented until:

(1) All requirements of § 222.35 are complied with; and

(2) At least 14 days have elapsed since receipt of all of the notifications required by § 222.35.

(b) All railroads operating over public highway-rail grade crossings within a quiet zone established in accordance with this part shall cease routine use of the locomotive horn at public highway-rail crossings upon the date set by the state or local government which has established such quiet zone.

§ 222.39 Quiet zone duration.

(a) Subject to paragraph (d) of this section, a quiet zone designated by a state or local government under § 222.33(a) may remain in effect indefinitely, provided that all requirements of this part continue to be met and that within six months before the expiration of five years from the original designation made to FRA, or within six months of the expiration of five years from the last affirmation, the designating entity affirms in writing to the FRA Associate Administrator for Safety that the supplementary safety measures implemented within the quiet zone continue to conform with the requirements of Appendix A of this part. Copies of such notification must be provided to the parties identified in § 222.35(a) by certified mail, return receipt requested. In addition to its affirmation, the designating entity must send to the FRA Associate Administrator for Safety an accurate and complete U.S. DOT-AAR National Highway-Rail Grade Crossing Inventory Form, FRA F6180.71, for each public highway-rail grade crossing within the quiet zone.

(b) Subject to paragraph (d) of this section, a quiet zone accepted by FRA under § 221.33(b) shall remain in effect indefinitely, provided that all requirements of this part continue to be met and that within six months before the expiration of three years from the original designation made to FRA, or within six months of the expiration of three years from the last affirmation, the state or local government affirms in writing (with notification by certified mail, return receipt requested, of such affirmation provided to the parties identified in § 222.35(b)) that the supplementary safety measures installed and implemented in the quiet zone continue to be effective and continue to fully compensate for the absence of the warning provided by the locomotive horn. In addition to its affirmation, the governmental entity must send to the FRA Associate Administrator for Safety an accurate and complete U.S. DOT-AAR National Highway-Rail Grade Crossing Inventory Form, FRA F6180.71, for each public highway-rail grade crossing within the quiet zone.

(c) Subject to paragraph (d) of this section, a quiet zone created by a state or local government under § 222.33(c) may remain in effect indefinitely, provided that all requirements of this part continue to be met and that within six months before the expiration of five years from the original designation made to FRA, or within six months of the expiration of five years from the last affirmation, the state or local government affirms in writing to the FRA Associate Administrator for Safety that the conditions contained in Appendix C of this part continue to be met. Copies of such notification must be provided to the parties identified in § 222.35(a) by certified mail, return receipt requested. In addition to its affirmation, the designating entity must send to the FRA Associate Administrator for Safety an accurate and complete U.S. DOT-AAR National Highway-Rail Grade Crossing Inventory Form, FRA F6180.71, for each public highway-rail grade crossing within the quiet zone.

(d) The FRA Associate Administrator for Safety may, at any time, review the status of any quiet zone and determine whether, under the conditions then present, supplementary and alternative safety measures in place fully compensate for the absence of the warning provided by the locomotive horn, or in the case of quiet zones created under § 222.33(c), whether there is a significant risk with respect to loss of life or serious personal injury. If the FRA Associate Administrator for Safety makes a preliminary determination that such safety measures do not fully compensate for the absence of the locomotive horn, or that there is a significant risk with respect to loss of life or serious personal injury, he or she will publish notice of the determination in the **Federal Register** and provide an opportunity for comment and informal hearing. The FRA Associate Administrator for Safety may require that additional safety measures be taken or that the quiet zone be terminated.

§ 222.41 Supplementary and alternative safety measures.

(a) Approved supplementary safety measures determined to be at least as effective as the locomotive horn when each public highway-rail grade crossing is equipped, and standards for their implementation, are listed in Appendix A of this part.

(b) Additional, alternative safety measures that may be included in a request for FRA acceptance of a quiet zone under § 222.33(b) are listed in Appendix B of this part.

(c) Appendix C of this part describes those situations in which the Administrator has determined do not present a significant risk with respect to loss of life or serious personal injury from establishment of a quiet zone. In the situations listed, supplementary safety measures are not required.

(d) The Administrator will add new supplementary safety measures and standards to Appendix A or B of this part when the Administrator determines that such measures or standards are an effective substitute for the locomotive horn in the prevention of collisions and casualties at public highway-rail grade crossings. The Administrator will add new listings to Appendix C of this part when the Administrator determines that

no negative safety consequences result from establishment of a quiet zone under the listed conditions.

(e) The following do not, individually or in combination, constitute supplementary or alternative safety measures: standard traffic control devices arrangements such as reflectorized crossbucks, STOP signs, flashing lights, or flashing lights with gates that do not completely block travel over the line of railroad, or traffic signals.

§ 222.43 Development and approval of new supplementary safety measures.

(a) Interested parties may demonstrate proposed new supplementary safety systems or procedures to determine if they are an effective substitute for the locomotive horn in the prevention of collisions and casualties at public highway-rail grade crossings.

(b) The Administrator may order railroad carriers operating over a public highway-rail grade crossing or crossings to temporarily cease the sounding of locomotive horns at such crossings to demonstrate proposed new supplementary safety measures, provided that such proposed new supplementary safety systems or procedures have been subject to prior testing and evaluation. In issuing such order, the Administrator may impose any conditions or limitations on such use of the proposed new supplementary safety measures which he or she deems necessary in order provide the highest level of safety.

(c) Upon successful completion of a demonstration of proposed new supplementary safety measures, interested parties may apply to the FRA Associate Administrator for Safety for approval of the new supplementary safety measures. Applications for approval shall be in writing and shall include the following:

(1) The name and address of the applicant;

(2) A description and design of the proposed new supplementary safety measure;

(3) A description and results of the demonstration project in which the proposed supplementary safety measures were tested;

(4) Estimated costs of the proposed new supplementary safety measure; and

(5) Any other information deemed necessary.

(d) If the FRA Associate Administrator for Safety is satisfied that the proposed supplementary safety measure fully compensates for the absence of the warning provided by the locomotive horn, he or she will approve its use as a supplementary safety measure to be used in the same manner as the measures listed in Appendix A of this part. The Associate Administrator may impose any conditions or limitations on use of the supplementary safety measures which he or she deems necessary in order to provide the highest level of safety.

(e) If the FRA Associate Administrator for Safety approves a new supplementary safety measure he or she will notify the applicant and shall add the measure to the list of approved supplementary safety measures contained in Appendix A of this part.

(f) The party applying for approval of a supplementary safety measure may appeal to the Administrator from a decision by the FRA Associate Administrator for Safety rejecting a proposed supplementary safety measure or the conditions or limitations imposed on use.

§ 222.45 Communities with pre-existing restrictions on use of locomotive horns.

(a) Subject to paragraph (b) of this section, communities which, as of October 9, 1996, have enacted ordinances restricting the sounding of a locomotive horn, or communities which, as of October 9, 1996, have not been subject to sounding of locomotive horns at highway-rail crossings due to formal or informal agreements between the community and the railroad or railroads may continue those restrictions for a period of up to three years from [the date of publication of the final rule] in order to provide time for the community to plan for, and implement supplementary safety measures at the affected crossings.

(b) If a quiet zone has not been created pursuant to § 222.33 by [two years after date of publication of the final rule], a community with a pre-existing restriction on locomotive horns as of October 9, 1996, must initiate or increase both grade crossing safety public awareness initiatives and public highway-rail grade crossing traffic law enforcement programs in an effort to offset the lack of supplementary safety measures at affected crossings. The community must document in writing the steps taken to comply with this provision. The FRA Associate Administrator for Safety reserves the right to determine whether the steps taken are sufficient to temporarily offset the lack of supplementary safety measures. If such public awareness initiatives and traffic law enforcement programs are not initiated or increased, or if the FRA Associate Administrator for Safety determines that the steps taken are not sufficient to temporarily offset the lack of supplementary safety measures, locomotive horns must be sounded in accordance with § 222.21.

(c) Quiet zones which have been established by communities prior to issuance of this NPRM and which have been determined by the FRA Associate Administrator for Safety to be substantially in accord with this part shall be deemed to comply with the requirements of Appendix B of this part.

Appendix A to Part 222—Approved Supplementary Safety Measures Community Guide

The following discussion is intended to help guide state and local governments through the decision making process in determining whether to designate a quiet zone under § 222.33(a) or to apply for acceptance of a quiet zone under § 222.33(b). The suggested steps and ''checklist'' items are not meant to supersede or amend the regulatory requirements. They are included to provide a general guide. However, use of FRA's DOT Highway-Rail Crossing Accident Prediction Formula to determine the ''mitigation goal'' together with the figures to be used in performing local calculations is required. The suggested steps are as follows:

a. Define the subject corridor and the involved crossings. Obtain the U.S. DOT/AAR Crossing Inventory Number of each crossing within the proposed quiet zone. The corridor must be at least one-half mile in length (805 meters) measured along the rail right-of-way, and all highway-rail crossings within the entire length of the quiet zone corridor must be included.

b. Ensure that current data, especially public or private status, highway and rail traffic counts and at least five years of collision history, is available. Current highway and rail traffic counts must be submitted to the Federal Railroad Administration (FRA) for inclusion in the U.S. DOT/AAR National Highway-Rail Crossing Inventory. A record of collisions can be obtained from the FRA (Office of Safety Analysis (RRS–22) Mail Stop 17, 1120 Vermont Avenue, NW., Washington, DC 20590 or on the internet at http://safetydata.fra.dot.gov/officeofsafety.

c. Determine the presence of minimum requirements. The minimum traffic control requirement for each public highway-rail grade crossing within a quiet zone is flashing lights, automatic gates, and bell and a special advance warning sign (in accordance with standards contained in the Manual on Uniform Traffic Control Devices) on each highway approach which advises approaching highway users that the train horn will not be sounded.

d. Account for private and pedestrian crossings. Private highway-rail crossings do not need to be addressed by supplementary or alternative safety measures to be included within a quiet zone. Calculations of violation rates and collision rates should not include such crossings. The minimum traffic control requirement for each private highway-rail grade crossing and pedestrian at-grade crossing within a quiet zone is a special warning sign on each approach which

advises users of the crossing that the train horn will not be sounded.

e. In order to establish a quiet zone that includes private crossings, the jurisdiction establishing the quiet zone must notify all land owners using the crossing that train horns will not be routinely sounded at crossings within the quiet zone.

f. Determine which crossings can be addressed by the engineering-based supplementary safety measures of this Appendix A. If all crossings can be so addressed without changing any requirements of the supplementary safety measures, the road authorities and the railroad(s) should proceed to implement the appropriate measures and make the applicable notifications.

g. If any of the crossings will be addressed with a non-engineering-based supplementary safety measure from this Appendix A (currently, only Photo Enforcement is included), a baseline violation rate for each crossing to be so addressed must be determined for subsequent assessment purposes:

1. In the case where train horns are routinely being sounded within the proposed quiet zone: once baseline violation rates have been determined, and before the quiet zone has been implemented, Photo Enforcement should be initiated. In the calendar quarter following initiation, a new violation rate should be determined and compared to the baseline violation rate. If and when the new violation rates at all crossings in the quiet zone at which Photo Enforcement is to be used are at least 49 percent below the baseline violation rates, and all the other crossings in the quiet zone have been addressed with Appendix A options, the community and the railroad may proceed with notifications and implementation of the quiet zone. Violation rates must be monitored for the next two calendar quarters and every other quarter thereafter. If the violation rate is ever greater than the baseline violation rate, the procedures for dealing with unacceptable effectiveness after establishment of a quiet zone should be followed.

2. In the case where the routine use of train horns within the proposed quiet zone is already prohibited: Once baseline violation rates have been determined and all the other crossings in the quiet zone have been addressed with other Appendix A options, the community and the railroad may proceed with initiation of Photo Enforcement and notification and implementation of the quiet zone. Violation rates must be monitored for the next two calendar quarters and every other quarter thereafter. If the violation rate is ever greater than a value less than 49 percent below the baseline violation rate, the procedures for dealing with unacceptable effectiveness after establishment of a quiet zone should be followed.

h. Where one or more crossings in the proposed quiet zone corridor can not be addressed with a supplementary safety measure from this Appendix A, the applicant must use the DOT Highway-Rail Crossing Accident Prediction Formula to determine the total of predicted accidents at all of the public crossings within the quiet zone assuming that each crossing is equipped with lights, automatic gates, and a bell. If a ban is not in effect, this total becomes the ''mitigation goal'' for the corridor, i.e., the predicted accident total which the community's proposal must show will not be exceeded once the quiet zone is implemented. The mitigation goal must be multiplied by 1.62 (communities subject to FRA's Emergency Order No. #15 (EO15) should multiply by 3.125) to establish the 'expected accident total without horns,' i.e., the expected accident total once horns are banned if no supplementary safety measures are applied. If a ban is in effect, this total is the expected accident total without horns. The mitigation goal is realized by multiplying this total by .62 (communities subject to EO15 should multiply by .32).

i. The accident prediction for any crossing(s) to be closed prior to implementation of the quiet zone should be subtracted from the ''expected accident total without horns.'' The highway traffic counts for crossings to be closed must be added to the traffic counts of the crossings which will be used by the displaced vehicles and the accident prediction for these impacted crossings must be recalculated and multiplied by 1.62 (3.125 for communities subject to EO15) to establish a new ''expected accident total without horns.''

j. For each crossing to be addressed, the effectiveness of the supplementary safety measure to be applied, as set forth above, should be multiplied times that crossing's accident prediction and the product should be subtracted from the ''expected accident total without horns.'' For the non-engineering-based measures, an effectiveness of .38 may be assumed until analysis of the specific crossing and applied mitigation measure has been assessed.

k. Once it can be shown that the ''expected accident total without horns'' will be reduced to or below the mitigation goal, the quiet zone proposal may be submitted for approval to FRA's Associate Administrator for Safety.

Approved Supplementary Safety Measures

1. Temporary Closure of a Public Highway-Rail Grade Crossing

Close the crossing to highway and pedestrian traffic during whistle-ban periods.

Required

a. The closure system must completely block highway and pedestrian traffic from entering the crossing.

b. The crossing must be closed during the same hours every day.

c. The crossing may only be closed during one period each 24-hours.

d. Daily activation and deactivation of the system is the responsibility of the traffic control authority or governmental authority responsible for maintenance of the street or highway crossing the railroad. The entity may provide for third party activation and deactivation; however, the governmental entity shall remain fully responsible for compliance with the requirements of this part.

e. The system must be tamper and vandal resistant to the same extent as other traffic control devices.

Recommended

Manual on Uniform Traffic Control Devices (MUTCD) standards should be met for any barricades and signs used in the closure of the facility. Signs for alternate highway traffic routes should be erected in accordance with MUTCD and state and local standards and should inform pedestrians and motorists that the streets are closed, the period for which they are closed, and that alternate routes must be used.

2. Four-Quadrant Gate System

Install gates at a crossing sufficient to fully block highway traffic from entering the crossing when the gates are lowered, including at least one gate for each direction of traffic on each approach.

Required

a. When a train is approaching, all highway approach and exit lanes on both sides of the highway-rail crossing must be spanned by gates, thus denying to the highway user the option of circumventing the conventional approach lane gates by switching into the opposing (oncoming) traffic lane in order to enter the crossing and cross the tracks.

b. Gates must be activated by use of constant warning time devices.

c. The gap between the ends of the entrance and exit gates (on the same side of the railroad tracks) when both are in the fully lowered, or down, position must be less than two feet if no median is present. If the highway approach is equipped with a median or a channelization device between the approach and exit lanes, the lowered gates must reach to within one foot of the median or channelization device, measured horizontally across the road from the end of the lowered gate to the median or channelization device or to a point over the edge of the median or channelization device. The gate and the median top or channelization device do not have to be at the same elevation.

d. ''Break-away'' channelization devices must be frequently monitored to replace broken elements.

e. Signs must be posted alerting motorists to the fact that the train horn does not sound.

Recommendations for new installations only

f. Gate timing should be established by a qualified traffic engineer based on site specific determinations. Such determination should consider the need for and timing of a delay in the descent of the exit gates (following descent of the conventional entrance gates). Factors to be considered may include available storage space between the gates that is outside the fouling limits of the track(s) and the possibility that traffic flows may be interrupted as a result of nearby intersections.

g. When operating in the failure (fail-safe) mode, exit gates should remain in the raised, or up, position.

h. A determination should be made as to whether it is necessary to provide vehicle presence detectors (VPDs) to open or keep open the exit gates until all vehicles are clear of the crossing. VPD should be installed on one or both sides of the crossing and/or in the surface between the rails closest to the

field. Among the factors that should be considered are the presence of intersecting roadways near the crossing, the priority that the traffic crossing the railroad is given at such intersections, the types of traffic control devices at those intersections, and the presence and timing of traffic signal preemption.

i. Highway approaches on one or both sides of the highway-rail crossing may be provided with medians or channelization devices between the opposing lanes. Medians should be defined by a barrier curb or mountable curb, or by reflectorized channelization devices, or by both.

j. Remote monitoring of the status of these crossing systems is preferable. This is especially important in those areas in which qualified railroad signal department personnel are not readily available.

3. Gates With Medians or Channelization Devices

Install medians or channelization devices on both highway approaches to a public highway-rail grade crossing denying to the highway user the option of circumventing the approach lane gates by switching into the opposing (oncoming) traffic lane in order to drive around lowered gates to cross the tracks.

Required

a. Opposing traffic lanes on both highway approaches to the crossing must be separated by either: (1) Medians bounded by barrier curbs, or (2) medians bounded by mountable curbs if equipped with channelization devices.

b. Medians must extend at least 100 feet, or if there is an intersection within 100 feet of the gate, the median must extent at least 60 feet from the gate.

c. Intersections within 60 feet of the crossing must be closed or moved.

d. Crossing warning system must be equipped with constant warning time devices.

e. The gap between the lowered gate and the barrier curb or channelization device must be one foot or less, measured horizontally across the road from the end of the lowered gate to the barrier curb or channelization device or to a point over the curb edge or channelization device. The gate and the curb top or channelization device do not have to be at the same elevation.

f. ''Break-away'' channelization devices must be frequently monitored to replace broken elements.

g. Signs must be posted alerting motorists to the fact that the train horn does not sound.

4. One Way Street With Gate(s)

Gate(s) must be installed such that all approaching highway lanes to the public highway-rail grade crossing are completely blocked.

Required

a. Gate arms on the approach side of the crossing should extend across the road to within one foot of the far edge of the pavement. If a gate is used on each side of the road, the gap between the ends of the gates when both are in the lowered, or down, position should be no more than two feet.

b. If only one gate is used, the edge of the road opposite the gate mechanism must be configured with a barrier curb extending at least 100 feet.

c. Crossing warning system must be equipped with constant warning time devices.

d. Signs must be posted alerting motorists to the fact that the train horn does not sound.

5. Photo Enforcement

The alternative entails automated means of gathering valid photographic or video evidence of traffic law violations together with follow-through by law enforcement and the judiciary.

Required

a. State law authorizing use of photographic or video evidence both to bring charges and sustain the burden of proof that a violation of traffic laws concerning public highway-rail grade crossings has occurred, accompanied by commitment of administrative, law enforcement and judicial officers to enforce the law.

b. Sanction includes sufficient minimum fine (*e.g.,* $100 for a first offense) to deter violations.

c. Means to reliably detect violations (e.g., loop detectors, video imaging technology).

d. Photographic or video equipment deployed to capture images sufficient to document the violation (including the face of the driver, if required to charge or convict under state law).

Note to 5.d.: This does not require that each crossing be continually monitored. The objective of this option is deterrence, which may be accomplished by moving photo/video equipment among several crossing locations, as long as the motorist perceives the strong possibility that a violation will lead to sanctions. Each location must appear identical to the motorist, whether or not surveillance equipment is actually placed there at the particular time. Surveillance equipment should be in place and operating at each crossing at least 25 percent of each calendar quarter.

e. Appropriate integration, testing and maintenance of the system to provide evidence supporting enforcement.

f. Semi-annual analysis verifying that the last quarter's violation rates remain at or below the acceptable levels established prior to initiation of photo enforcement.

g. Signs must be posted alerting motorists to the fact that the train horn does not sound.

h. Public awareness efforts designed to reinforce photo enforcement and alert motorists to the absence of train horns.

Appendix B to Part 222—Alternative Safety Measures

a. Please refer to the section entitled ''Community guide'' at the beginning of Appendix A of this part for a discussion intended to help guide state and local governments through the decision making process in determining whether to designate a quiet zone under § 222.33(a) (implementing supplementary safety measures) or to apply for acceptance of a quiet zone under § 222.33(b) (implementing alternative safety measures or a combination of alternative and supplementary safety measures).

b. A state or local government seeking acceptance of a quiet zone under § 222.33(b) may include in its proposal alternative safety measures listed in this appendix. Credit may be proposed for closing of public highway-rail grade crossings provided the baseline risk at other crossings is appropriately adjusted by increasing traffic counts at neighboring crossings as input data to the prediction formula (except to the extent that nearby grade separations are expected to carry that traffic).

c. The following alternative safety measures may be proposed to be employed in the same manner as stated in Appendix A of this part. Unlike application of the supplementary safety measures in Appendix A of this part, if there are unique circumstances pertaining to a specific crossing or number of crossings, the specific requirements associated with a particular supplementary safety measure may be adjusted or revised. In addition, as provided for in § 222.33(b), using the alternative safety measures contained in this Appendix B will enable a locality to tailor the use and application of various supplementary safety measures to a specific set of circumstances. Thus, a locality may institute alternative or supplementary measures on a number of crossings within a quiet zone but due to specific circumstances a crossing or a number of crossings may be omitted from the list of crossings to receive those safety measures. FRA will review the proposed plan, and will approve the proposal if it finds that the predicted collision rate applied to the quiet zone as a whole, is reduced to the required level.

d. The following alternative safety measures may be included in a proposal for acceptance by FRA for creation of a quiet zone. Approved supplementary safety measures which are listed in Appendix A of this part may be used for purposes of alternative supplementary safety measures. The requirements for the first five measures listed below are found in Appendix A of this part. If one or more of the requirements associated with that supplementary safety measure as listed in Appendix A of this part is revised or deleted, data or analysis supporting the revision or deletion must be provided to FRA for review.

1. Temporary Closure of a Public Highway-Rail Grade Crossing

Close the crossing to highway and pedestrian traffic during whistle-ban periods.

2. Four-Quadrant Gate System

Install sufficient gates at a public highway-rail grade crossing to fully block highway traffic from entering the crossing when the gates are lowered, including at least one gate per each direction of traffic on each approach.

3. Gates With Medians or Channelization Devices

Install medians or channelization devices on both highway approaches to a public highway-rail grade crossing which prevent highway traffic from driving around lowered gates.

4. One-Way Street With Gate(s)

Gate(s) are installed such that all approaching highway lanes to a public highway-rail grade crossing are completely blocked.

5. Photo Enforcement

Automated means of gathering valid photographic evidence of traffic law violations at a public highway-rail grade crossing together with follow-through by law enforcement and judicial personnel.

The following alternatives may be proposed for inclusion in a proposed program of alternative safety measures within specific quiet zone proposals:

16. Programmed Enforcement

Community and law enforcement officials commit to a systematic and measurable crossing monitoring and traffic law enforcement program at the public highway-rail grade crossing, alone or in combination with the Public Education and Awareness option.

Required

a. Subject to audit, a statistically valid baseline violation rate must be established through automated or systematic manual monitoring or sampling at the subject crossing(s). See Appendix A of this part (Photo Enforcement) for treatment of effectiveness with or without prior whistle ban.

b. A law enforcement effort must be defined, established and continued along with continual or regular monitoring.

c. Following implementation of the quiet zone, results of monitoring for not less than two full calendar quarters must show that the violation rate has been reduced sufficiently to compensate for the lack of train horns, (i.e., a reduction of at least 49 percent), and the railroad shall be notified (to resume sounding of the train horn if results are not acceptable.

d. Subsequent semi-annual sampling must indicate that this reduction is being sustained. If the reduction is not sustained, the state or municipality may continue the quiet zone for a maximum of one calendar quarter and shall increase the frequency of sampling to verify improved effectiveness. If, in the second calendar quarter following the quarter for which results were not acceptable, the rate is not acceptable, the quiet zone shall be terminated until requalified and accepted by FRA.

e. Signs alerting motorists to the fact that the train horn does not sound.

7. Public Education and Awareness

Conduct, alone or in combination with programmed law enforcement, a program of public education and awareness directed at motor vehicle drivers, pedestrians and residents near the railroad to emphasize the risks associated with public highway-rail grade crossings and applicable requirements of state and local traffic laws at those crossings.

Requirements

a. Subject to audit, a statistically valid baseline violation rate must be established through automated or systematic manual monitoring or sampling at the subject crossing(s). See Appendix A of this part (Photo Enforcement) for treatment of effectiveness with or without prior whistle ban.

b. A sustainable public education and awareness program must be defined, established and continued concurrent with continued monitoring. This program shall be provided and supported primarily through local resources.

c. Following implementation of the quiet zone, results of monitoring for not less than two full calendar quarters must show that the violation rate has been reduced sufficiently to compensate for the lack of train horns (i.e., a reduction of at least 49 percent with statistical confidence of .95). The railroad (with a copy of such notification sent to FRA's Associate Administrator for Safety) shall be notified to resume sounding of the train horn if results are not acceptable.

d. Subsequent semi-annual sampling must indicate that this reduction is being sustained. If the reduction is not sustained, the state or municipality may continue the quiet zone for a maximum of one calendar quarter and shall increase the frequency of sampling to verify improved effectiveness. If, in the second calendar quarter following the quarter for which results were not acceptable, the rate is not acceptable, the quiet zone shall be terminated until requalified and accepted by FRA.

e. Signs alerting motorists to the fact that the train horn does not sound.

Appendix C to Part 222—Conditions Not Requiring Additional Safety Measures

No negative safety consequences result from establishment of a quiet zone under the following conditions:

1. Train speed does not exceed 15 miles per hour;

2. Train travels between traffic lanes of a public street or on an essentially parallel course within 30 feet of the street;

3. Signs are posted at every grade crossing indicating that locomotive horns do not sound;

4. Unless the railroad is actually situated on the surface of the public street, traffic on all crossing streets is controlled by STOP signs or traffic lights which are interconnected with automatic crossing warning devices; and

5. The locomotive bell will ring when approaching and traveling through the crossing.

PART 229—[AMENDED]

2. The authority citation for part 229 continues to read as follows:

Authority: 49 U.S.C. 20103, 20107, 20701–20703, and 49 CFR 1.49.

3. Section 229.129 is revised to read as follows:

§ 229.129 Audible warning device.

(a) Each lead locomotive shall be provided with an audible warning device that produces a minimum sound level of 96dB(A) and a maximum sound level of [Option 1—104 dB(A); Option 2—111 dB(A)] at 100 feet forward of the locomotive in its direction of travel. The sound level of the device as measured 100 feet from the locomotive to the right and left of the center of the locomotive shall not exceed the permissible value measured at 100 feet forward of the locomotive. The device shall be arranged so that it can be conveniently operated from the engineer's normal position in the cab.

(b) Measurement of the sound level shall be made using a sound level meter conforming, at a minimum, to the requirements of ANSI S1.4–1971, Type 2, and set to an A-weighted slow response. While the locomotive is on level tangent track, the microphone shall be positioned 4 feet above the ground at the center line of the track, and shall be oriented with respect to the sound source in accordance with the manufacturer's recommendations. Measurements verifying compliance shall be taken only while the ambient temperature is in the range between 36 and 95 degrees Fahrenheit and the relative humidity is in the range between 20 and 90 percent. The test site shall be free of reflective structures (including buildings, natural barriers, and other rolling stock) within a 200 foot radius of the horn system.

Issued in Washington, D.C. on December 16, 1999.

Jolene M. Molitoris,

Federal Railroad Administrator.

[FR Doc. 00–4 Filed 1–12–00; 8:45 am]

BILLING CODE 4910–06–P

Federal Register

Thursday
January 13, 2000

Part III

Department of Defense
General Services Administration
National Aeronautics and Space Administration

48 CFR Parts 11, 22, et al.

Federal Acquisition Regulation; Liquidated Damages; Proposed Rule

DEPARTMENT OF DEFENSE

GENERAL SERVICES ADMINISTRATION

NATIONAL AERONAUTICS AND SPACE ADMINISTRATION

48 CFR Parts 11, 22, 36, 49, and 52

[FAR Case 1999–003]

RIN 9000–AI63

Federal Acquisition Regulation; Liquidated Damages

AGENCIES: Department of Defense (DoD), General Services Administration (GSA), and National Aeronautics and Space Administration (NASA).

ACTION: Proposed rule.

SUMMARY: The Civilian Agency Acquisition Council and the Defense Acquisition Regulations Council (Councils) are proposing to amend the Federal Acquisition Regulation (FAR) to rewrite guidance on liquidated damages in plain language.

DATES: Interested parties should submit comments in writing on or before March 13, 2000 to be considered in the formulation of a final rule.

ADDRESSES: Interested parties should submit written comments to: General Services Administration, FAR Secretariat (MVRS), 1800 F Street, NW, Room 4035, ATTN: Laurie Duarte, Washington, DC 20405.

Address e-mail comments submitted via the Internet to: farcase.1999–003@gsa.gov. Please submit comments only and cite FAR case 1999–003 in all correspondence related to this case.

FOR FURTHER INFORMATION CONTACT: The FAR Secretariat, Room 4035, GS Building, Washington, DC, 20405, at (202) 501–4755 for information pertaining to status or publication schedules. For clarification of content, contact Ms. Victoria Moss, Procurement Analyst, at (202) 501–4764. Please cite FAR case 1999–003.

SUPPLEMENTARY INFORMATION:

A. Background

The proposed rule amends guidance on liquidated damages in FAR Parts 11, 22, 36, and 49 and associated clauses at FAR Part 52. The FAR guidance on liquidated damages, particularly that at 11.502, is difficult to understand. We have amended the guidance using the plain language guidelines in a White House memorandum, Plain Language in Government Writing, dated June 1, 1998.

This rule was not subject to Office of Management and Budget review under Section 6(b) of Executive Order 12866, Regulatory Planning and Review, dated September 30, 1993. This rule is not a major rule under 5 U.S.C. 804.

B. Regulatory Flexibility Act

This proposed rule is not expected to have a significant economic impact on a substantial number of small entities within the meaning of the Regulatory Flexibility Act, 5 U.S.C. 601, *et seq.*, because the rule does not change existing practices. An Initial Regulatory Flexibility Analysis has, therefore, not been performed. Comments are invited from small businesses and other interested parties. The Councils will consider comments from small entities concerning the affected FAR subparts in accordance with 5 U.S.C. 610. Interested parties must submit such comments separately and should cite 5 U.S.C. 601, *et seq.* (FAR case 1999–003), in correspondence.

C. Paperwork Reduction Act

The Paperwork Reduction Act does not apply because the changes to the FAR do not impose information collection requirements that require the approval of the Office of Management and Budget under 44 U.S.C. 3501, *et seq.*

List of Subjects in 48 CFR Parts 11, 22, 36, 49, and 52

Government procurement.

Dated: January 7, 2000.

Edward C. Loeb,

Director, Federal Acquisition Policy Division.

Therefore, DoD, GSA, and NASA propose that 48 CFR parts 11, 22, 36, 49, and 52 be amended as set forth below:

1. The authority citation for 48 CFR parts 11, 22, 36, 49, and 52 continues to read as follows:

Authority: 40 U.S.C. 486(c); 10 U.S.C. chapter 137; and 42 U.S.C. 2473(c).

PART 11—DESCRIBING AGENCY NEEDS

2. Revise Subpart 11.5 to read as follows:

Subpart 11.5—Liquidated Damages

Sec.
11.500 Scope.
11.501 Policy.
11.502 Procedures.
11.503 Contract clauses.

11.500 Scope.

This subpart prescribes policies and procedures for using liquidated damages clauses in solicitations and contracts for supplies, services, research and development, and construction. This subpart does not apply to liquidated damages for subcontracting plans (see 19.705–7) or liquidated damages related to the Contract Work Hours and Safety Standards Act (see subpart 22.3).

11.501 Policy.

(a) The contracting officer must consider the potential impact on pricing, competition, and contract administration before using a liquidated damages clause. Use liquidated damages clauses only when—

(1) The time of delivery or timely performance is so important that the Government may reasonably expect to suffer damage if the delivery or performance is delinquent; and

(2) The extent or amount of such damage would be difficult or impossible to estimate accurately or prove.

(b) Liquidated damages are not punitive and are not negative performance incentives (see 16.402–2). Liquidated damages are used to compensate the Government for probable damages. Therefore, the liquidated damages rate must be a reasonable forecast of just compensation for the harm that is caused by late delivery or untimely performance of the particular contract. Use a maximum amount or a maximum period for assessing liquidated damages if these limits reflect the maximum probable damage to the Government. Also, the contracting officer may use more than one liquidated damages rate when the contracting officer expects the probable damage to the Government to change over the contract period of performance.

(c) The contract officer must take all reasonable steps to mitigate liquidated damages. If the contract contains a liquidated damages clause and the contracting officer is considering terminating the contract for default, the contracting officer should seek expeditiously to obtain performance by the contractor or terminate the contract and repurchase (see subpart 49.4). Prompt contracting officer action will prevent excessive loss to defaulting contractors and protect the interests of the Government.

(d) The amount of liquidated damages assessed under a contract is a unilateral decision made solely at the discretion of the Government.

(e) The head of the agency may reduce or waive the amount of liquidated damages assessed under a contract, if the Commissioner, Financial Management Service, or designee approves (see Treasury Order 145–10).

11.502 Procedures.

(a) Include the applicable liquidated damages clause and liquidated damages rates in solicitations when the contract

will contain liquidated damages provisions.

(b) Construction contracts with liquidated damages provisions must describe the rate(s) of liquidated damages assessed per day of delay. The rate(s) should include the estimated daily cost of Government inspection and superintendence. The rate(s) should also include an amount for other expected expenses associated with delayed completion such as—

(1) Renting substitute property; or

(2) Paying additional allowance for living quarters.

11.503 Contract clauses.

(a) Use the clause at 52.211–11, Liquidated Damages—Supplies, Services, or Research and Development, in fixed-price solicitations and contracts for supplies, services, or research and development when the contracting officer determines that liquidated damages are appropriate (see 11.501(a)).

(b) Use the clause at 52.211–12, Liquidated Damages—Construction, in solicitations and contracts for construction, other than cost-plus-fixed-fee, when the contracting officer determines that liquidated damages are appropriate (see 11.501(a)). If the contract specifies more than one completion date for separate parts or stages of the work, revise paragraph (a) of the clause to state the amount of liquidated damages for delay of each separate part or stage of the work.

(c) Use the clause at 52.211–13, Time Extensions, in solicitations and contracts for construction that use the clause at 52.211–12, Liquidated Damages—Construction.

PART 22—APPLICATION OF LABOR LAWS TO GOVERNMENT ACQUISITIONS

3. Revise section 22.302 to read as follows:

22.302 Liquidated damages and overtime pay.

(a) When an overtime computation discloses under-payments, the responsible contractor or subcontractor must pay the affected employee any unpaid wages and pay liquidated damages to the Government. The contracting officer must assess liquidated damages at the rate of $10 per affected employee for each calendar day on which the employer required or permitted the employee to work in excess of the standard workweek of 40 hours without paying overtime wages required by the Act.

(b) If the contractor or subcontractor fails or refuses to comply with overtime pay requirements of the Act and the funds withheld by Federal agencies for labor standards violations do not cover the unpaid wages due laborers and mechanics and the liquidated damages due the Government, make payments in the following order—

(1) Pay laborers and mechanics the wages they are owed (or prorate available funds if they do not cover the entire amount owed); and

(2) Pay liquidated damages.

(c) If the head of an agency finds that the administratively determined liquidated damages due under paragraph (a) of this section are incorrect, or that the contractor or subcontractor inadvertently violated the Act despite the exercise of due care, the agency head may—

(1) Reduce the amount of liquidated damages assessed for liquidated damages of $500 or less;

(2) Release the contractor or subcontractor from the liability for liquidated damages of $500 or less; or

(3) Recommend that the Secretary of Labor reduce or waive liquidated damages over $500.

(d) After the contracting officer determines the liquidated damages and the contractor makes appropriate payments, disburse any remaining assessments in accordance with agency procedures.

4. Sections 22.406–8 and 22.406–9 are revised to read as follows:

22.406–8 Investigations.

Conduct labor standards investigations when available information indicates such action is warranted. In addition, the Department of Labor may conduct an investigation on its own initiative or may request a contracting agency to do so.

(a) *Contracting agency responsibilities.* Conduct an investigation when a compliance check indicates that substantial or willful violations may have occurred or violations have not been corrected.

(1) The investigation must—

(i) Include all aspects of the contractor's compliance with contract labor standards requirements;

(ii) Not be limited to specific areas raised in a complaint or uncovered during compliance checks; and

(iii) Use personnel familiar with labor laws and their application to contracts.

(2) Do not disclose contractor employees' oral or written statements taken during an investigation or the employee's identity to anyone other than an authorized Government official without that employee's prior signed consent.

(3) Send a written request to the Administrator, Wage and Hour Division, to obtain—

(i) Investigation and enforcement instructions; or

(ii) Available pertinent Department of Labor files.

(4) Obtain permission from the Department of Labor before disclosing material obtained from Labor Department files, other than computations of back wages and liquidated damages and summaries of back wages due, to anyone other than Government contract administrators.

(b) *Investigation report.* The contracting officer must review the investigation report on receipt and make preliminary findings. The contracting officer normally must not base adverse findings solely on employee statements that the employee does not wish to have disclosed. However, if the investigation establishes a pattern of possible violations that are based on employees statements that are not authorized for disclosure, the pattern itself may support a finding of noncompliance.

(c) *Contractor Notification.* After completing the review, the contracting officer must do the following:

(1) Provide the contractor any written preliminary findings and proposed corrective actions, and notice that the contractor has the right to request that the basis for the findings be made available and to submit written rebuttal information within a reasonable period of time.

(2) Upon request, provide the contractor with rationale for the findings. However, under no circumstances will the contracting officer permit the contractor to examine the investigation report. Also, the contracting officer must not disclose the identity of any employee who filed a complaint or who was interviewed, without the prior consent of the employee.

(3)(i) The contractor may rebut the findings in writing within 60 days after it receives a copy of the preliminary findings. The rebuttal becomes part of the official investigation record. If the contractor submits a rebuttal, evaluate the preliminary findings and notify the contractor of the final findings.

(ii) If the contracting officer does not receive a timely rebuttal, the contracting officer must consider the preliminary findings final.

(4) If appropriate, request the contractor to make restitution for underpaid wages and assess liquidated damages. If the request includes liquidated damages, the request must state that the contractor has 60 days to request relief from such assessment.

(d) *Contracting officer's report.* After taking the actions prescribed in

paragraphs (b) and (c) of this subsection—

(1) The contracting officer must prepare and forward a report of any violations, including findings and supporting evidence, to the agency head. Standard Form 1446, Labor Standards Investigation Summary Sheet, is the first page of the report; and

(2) The agency head must process the report as follows:

(i) The contracting officer must send a detailed enforcement report to the Administrator, Wage and Hour Division, within 60 days after completion of the investigation, if—

(A) A contractor or subcontractor underpaid by $1,000 or more;

(B) The contracting officer believes that the violations are aggravated or willful (or, also, there is reason to believe that the contractor has disregarded its obligations to employees and subcontractors under the Davis-Bacon Act);

(C) The contractor or subcontractor has not made restitution; or

(D) Future compliance has not been assured.

(ii) If the Department of Labor expressly requested the investigation and none of the conditions in paragraph (d)(2)(i) of this subsection exist, submit a summary report to the Administrator, Wage and Hour Division. The report must include—

(A) A summary of any violations;

(B) The amount of restitution paid;

(C) The number of workers who received restitution;

(D) The amount of liquidated damages assessed under the Contract Work Hours and Safety Standards Act;

(E) Corrective measures taken; and

(F) Any information that may be necessary to review any recommendations for an appropriate adjustment in liquidated damages.

(iii) If none of the conditions in paragraphs (d)(2)(i) or (ii) of this subsection are present, close the case and retain the report in the appropriate contract file.

(iv) If substantial evidence is found that violations are willful and in violation of a criminal statue, (generally 18 U.S.C. 874 or 1001), forward the report (supplemented if necessary) to the Attorney General of the United States for prosecution if the facts warrant. Notify the Administrator, Wage and Hour Division, when the report is forwarded for the Attorney General's consideration.

(e) *Department of Labor investigations.* The Department of Labor will furnish the contracting officer an enforcement report detailing violations found and any corrective action taken by the contractor, in investigations that disclose—

(1) Underpayments totaling $1,000 or more;

(2) Aggravated or willful violations (or, when the contracting officer believes that the contractor has disregarded its obligations to employees and subcontractors under the Davis-Bacon Act); or

(3) Potential assessment of liquidated damages under the Contract Work Hours and Safety Standards Act.

(f) *Other investigations.* The Department of Labor will provide a letter summarizing the findings of the investigation to the contracting officer for all investigations that are not described in paragraph (e) of this subsection.

22.406–9 Withholding from or suspension of contract payments.

(a) *Withholding from contract payments.* If the contracting officer believes a violation exists (see 22.406–8), or upon request of the Department of Labor, the contracting officer must withhold from payments due the contractor an amount equal to the estimated wage underpayment and estimated liquidated damages due the United States under the Contract Work Hours and Safety Standards Act. (See 22.302.)

(1) Contracting officers must, if the contracting officer believes a violation exists or upon request of the Department of Labor, withhold funds from any current Federal contract or Federally assisted contract with the same prime contractor, that is subject to either Davis-Bacon Act or Contract Work Hours and Safety Standards Act requirements.

(2) If a subsequent investigation confirms violations, the contracting officer must adjust the withholding as necessary. However, if the Department of Labor requested the withholding, the contracting officer must not reduce or release the withholding without written approval of the Department of Labor.

(3) Use withheld funds as provided in paragraph (c) of this subsection to satisfy assessed liquidated damages, and unless the contractor makes restitution, validated wage underpayments.

(b) *Suspension of contract payments.* If a contractor or subcontractor fails or refuses to comply with the labor standards clauses of the Davis-Bacon Act and related statutes, the agency upon its own action or upon the written request of the Department of Labor, must suspend any further payment, advance, or guarantee of funds until the violations cease or until the agency has withheld sufficient funds to compensate employees for back wages, and to cover any liquidated damages due.

(c) *Disposition of contract payments withheld or suspended.* (1) *Forwarding wage underpayments to Secretary of the Treasury.* Upon final administrative determination, if the contractor or subcontractor has not made restitution, the contracting officer must forward to the appropriate disbursing office Standard Form (SF) 1093, Schedule of Withholdings Under the Davis-Bacon Act (40 U.S.C. 276(a)) and/or Contract Work Hours and Safety Standards Act (40 U.S.C. 327–333). Attach to the SF 1093 a list of the name, social security number, and last known address of each affected employee; the amount due each employee; employee claims if feasible; and a brief rationale for restitution. Also, the contracting officer must indicate if restitution was not made because the employee could not be located. The Government may assist underpaid employees in preparation of their claims. The disbursing office must submit the SF 1093 with attached additional data and the funds withheld (by check) to the Secretary of the Treasury.

(2) *Returning of withheld funds to contractor.* When funds withheld exceed the amount required to satisfy validated wage underpayments and assessed liquidated damages, return the funds to the contractor.

(3) *Limitation on forwarding or returning funds.* If the Department of Labor requested the withholding or if the findings are disputed (see 22.406–10(e)), the contracting officer must not forward the funds to the Secretary of the Treasury, or return them to the contractor without approval by the Department of Labor.

(4) *Liquidated damages.* Upon final administrative determination, the contracting officer must dispose of funds withheld or collected for liquidated damages in accordance with agency procedures.

PART 36—CONSTRUCTION AND ARCHITECT-ENGINEER CONTRACTS

36.206 [Amended]

5. Amend section 36.206 by removing ''shall'' and adding ''must'' in is place.

PART 49—TERMINATION OF CONTRACTS

6. In section 49.402–7, revise paragraph (a); and amend paragraph (b) by removing ''shall'' and inserting ''must'' in its place. The revised text reads as follows:

49.402–7 Other damages.

(a) If the contracting officer terminates a contract for default or follows a course of action instead of termination for default (see 49.402–4), the contracting officer promptly must assess and demand any liquidated damages to which the Government is entitled under the contract. Under the contract clause at 52.211–11, these damages are in addition to any excess repurchase costs.

* * * * *

7. Revise section 49.404 to read as follows:

49.404 Surety-takeover agreements.

(a) The procedures in this section apply primarily, but not solely, to fixed-price construction contracts terminated for default.

(b) Since the surety is liable for damages resulting from the contractor's default, the surety has certain rights and interests in the completion of the contract work and application of any undisbursed funds. Therefore, the contracting officer must consider carefully the surety's proposals for completing the contract. The contracting officer must take action on the basis of the Government's interest, including the possible effect upon the Government's rights against the surety.

(c) The contracting officer should permit surety offers to complete the contract, unless the contracting officer believes that the persons or firms proposed by the surety to complete the work are not competent and qualified or the proposal is not in the best interest of the Government.

(d) There may be conflicting demands for the defaulting contractor's assets, including unpaid prior earnings (retained percentages and unpaid progress estimates). Therefore, the surety may include a ''takeover'' agreement in its proposal, fixing the surety's rights to payment from those funds. The contracting officer may (but not before the effective date of termination) enter into a written agreement with the surety. The contracting officer should consider using a tripartite agreement among the Government, the surety, and the defaulting contractor to resolve the defaulting contractor's residual rights, including assertions to unpaid prior earnings.

(e) Any takeover agreement must require the surety to complete the contract and the Government to pay the surety's costs and expenses up to the balance of the contract price unpaid at the time of default, subject to the following conditions:

(1) Any unpaid earnings of the defaulting contractor, including retained percentages and progress estimates for work accomplished before termination, must be subject to debts due the Government by the contractor, except to the extent that the unpaid earnings may be used to pay the completing surety its actual costs and expenses incurred in the completion of the work, less its payments and obligations under the payment bond given in connection with the contract.

(2) The surety is bound by contract terms governing liquidated damages for delays in completion of the work, unless the delays are excusable under the contract.

(3) If the contract proceeds have been assigned to a financing institution, the surety must not be paid from unpaid earnings, unless the assignee provides written consent.

(4) The contracting officer must not pay the surety more than the amount it expended discharging its liabilities under the defaulting contractor's payment bond. Payments to the surety to reimburse it for discharging its liabilities under the payment bond of the defaulting contractor must be only on authority of—

(i) Mutual agreement among the Government, the defaulting contractor, and the surety;

(ii) Determination of the Comptroller General as to payee and amount; or (iii) Order of a court of competent jurisdiction.

PART 52—SOLICITATION PROVISIONS AND CONTRACT CLAUSES

8. Revise sections 52.211–11 through 52.211–13 to read as follows:

52.211–11 Liquidated Damages—Supplies, Services, or Research and Development.

As prescribed in 11.503(a), insert the following clause in solicitations and contracts:

Liquidated Damages—Supplies, Services, or Research and Development (Date)

(a) If the Contractor fails to deliver the supplies or perform the services within the time specified in this contract, the Contractor shall, in place of actual damages, pay to the Government liquidated damages of $ per calendar day of delay [*Contracting Officer insert amount*].

(b) If the Government terminates this contract in whole or in part under the Default—Fixed-Price Supply and Service clause, the Contractor is liable for liquidated damages accruing until the Government reasonably obtains delivery or performance of similar supplies or services. These liquidated damages are in addition to excess costs of repurchase under the Termination clause.

(c) The Contractor will not be charged with liquidated damages when the delay in delivery or performance is beyond the control and without the fault or negligence of the Contractor as defined in the Default—Fixed-Price Supply and Service clause in this contract.

(End of clause)

52.211–12 Liquidated Damages—Construction.

As prescribed in 11.503(b), insert the following clause in solicitations and contracts:

Liquidated Damages—Construction (Date)

(a) If the Contractor fails to complete the work within the time specified in the contract, the Contractor shall pay liquidated damages to the Government in the amount of [*Contracting Officer insert amount*] for each calendar day of delay until the work is completed or accepted.

(b) If the Government terminates the Contractor's right to proceed, liquidated damages will continue to accrue until the work is completed. These liquidated damages are in addition to excess costs of repurchase under the Termination clause.

(End of clause)

52.211–13 Time Extensions.

As prescribed in 11.503(c), insert the following clause:

Time Extensions (Date)

Time extensions for contract changes will depend upon the extent, if any, by which the changes cause delay in the completion of the various elements of construction. The change order granting the time extension may provide that the contract completion date will be extended only for those specific elements related to the changed work and that the remaining contract completion dates for all other portions of the work will not be altered. The change order also may provide an equitable readjustment of liquidated damages under the new completion schedule.

(End of clause)

9. Revise section 52.222–4 to read as follows:

52.222–4 Contract Work Hours and Safety Standards Act—Overtime Compensation.

As prescribed in 22.305, insert the following clause:

Contract Work Hours and Safety Standards Act—Overtime Compensation (Date)

(a) *Overtime requirements.* No Contractor or subcontractor employing laborers or mechanics (see Federal Acquisition Regulation 22.300) shall require or permit them to work over 40 hours in any workweek unless they are paid at least 1½ times the basic rate of pay for each hour worked over 40 hours.

(b) *Violation; liability for unpaid wages; liquidated damages.* The responsible Contractor and subcontractor are liable for unpaid wages if they violate the terms in paragraph (a) of this clause. In addition, the Contractor and subcontractor are liable for liquidated damages payable to the Government. The Contracting Officer will assess such liquidated damages at the rate of

$10 per affected employee for each calendar day on which the employer required or permitted the employee to work in excess of the standard workweek of 40 hours without paying overtime wages required by the Contract Work Hours and Safety Standards Act.

(c) *Withholding for unpaid wages and liquidated damages.* The Contracting Officer will withhold from payments due under the contract sufficient funds required to satisfy any Contractor or subcontractor liabilities for unpaid wages and liquidated damages. If amounts withheld under the contract are insufficient to satisfy Contractor or subcontractor liabilities, the Contracting Officer will withhold payments from other Federal or federally assisted contracts held by the same Contractor that are subject to the Contract Work Hours and Safety Standards Act.

(d) *Payrolls and basic records.* (1) The Contractor and its subcontractors shall maintain payrolls and basic payroll records for all laborers and mechanics working on the contract during the contract and shall make them available to the Government until 3 years after contract completion. The records shall contain the name and address of each employee, social security number, labor classifications, hourly rates of wages paid, daily and weekly number of hours worked, deductions made, and actual wages paid. The records need not duplicate those required for construction work by Department of Labor regulations at 29 CFR 5.5(a)(3) implementing the Davis-Bacon Act.

(2) The Contractor and its subcontractors shall allow authorized representatives of the Contracting Officer or the Department of Labor to inspect, copy, or transcribe records maintained under paragraph (d)(1) of this clause. The Contractor or subcontractor also shall allow authorized representatives of the Contracting Officer or Department of Labor to interview employees in the workplace during working hours.

(e) *Subcontracts.* The Contractor shall insert the provisions set forth in paragraphs (a) through (d) of this clause in subcontracts exceeding $100,000 and require subcontractors to include these provisions in any lower tier subcontracts. The Contractor shall be responsible for compliance by any subcontractor or lower tier subcontractor with the provisions set forth in paragraphs (a) through (d) of this clause.

(End of clause)

[FR Doc. 00–738 Filed 1–12–00; 8:45 am]

BILLING CODE 6820–EP–P

Federal Register

Thursday
January 13, 2000

Part IV

The President

Memorandum of January 5, 2000—Delegation of Authority Under Sections 1402 and 1406 of the National Defense Authorization Act for Fiscal Year 2000 (Public Law 106–65)

Federal Register
Vol. 65, No. 9
Thursday, January 13, 2000

Presidential Documents

Title 3—

The President

Memorandum of January 5, 2000

Delegation of Authority Under Sections 1402 and 1406 of the National Defense Authorization Act for Fiscal Year 2000 (Public Law 106–65)

Memorandum for the Secretary of Defense

By the authority vested in me by the Constitution and laws of the United States, including section 301 of title 3, United States Code, I hereby delegate to the Secretary of Defense the duties and responsibilities vested in the President by sections 1402 and 1406 of the National Defense Authorization Act for Fiscal Year 2000 (''the Act'') (Public Law 106–65).

The Department of Defense shall prepare the report required by section 1402 of the Act with the assistance of the Department of State, the Department of Commerce, the Department of Energy, the Department of the Treasury, the Director of Central Intelligence, and the Federal Bureau of Investigation. The Department of Defense shall obtain concurrence on the report from the following agencies: the Department of State, the Department of Commerce, the Director of Central Intelligence on behalf of the Intelligence Community, the Department of the Treasury, and the Federal Bureau of Investigation prior to submission to the Congress.

The Departments of Defense and Energy shall jointly prepare the report required by section 1406 of the Act with the assistance of the Department of State, the Department of Commerce, and the Director of Central Intelligence. The Departments of Defense and Energy shall obtain concurrence on the report from the following agencies: the Department of State, the Department of Commerce, and the Director of Central Intelligence on behalf of the Intelligence Community prior to submission to the Congress.

Any reference in this memorandum to the provisions of any Act shall be deemed to be a reference to such Act or its provisions as may be amended from time to time.

You are authorized and directed to publish this memorandum in the **Federal Register**.

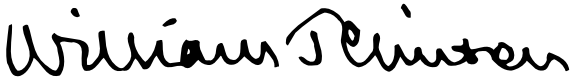

THE WHITE HOUSE,
Washington, January 5, 2000.

[FR Doc. 00–1015
Filed 1–12–00; 8:45 am]
Billing code 5001–10–M

Reader Aids

Federal Register

Vol. 65, No. 9

Thursday, January 13, 2000

CUSTOMER SERVICE AND INFORMATION

Federal Register/Code of Federal Regulations

General Information, indexes and other finding aids	**202–523–5227**
Laws	**523–5227**
Presidential Documents	
Executive orders and proclamations	**523–5227**
The United States Government Manual	**523–5227**
Other Services	
Electronic and on-line services (voice)	**523–4534**
Privacy Act Compilation	**523–3187**
Public Laws Update Service (numbers, dates, etc.)	**523–6641**
TTY for the deaf-and-hard-of-hearing	**523–5229**

ELECTRONIC RESEARCH

World Wide Web

Full text of the daily Federal Register, CFR and other publications:

http://www.access.gpo.gov/nara

Federal Register information and research tools, including Public Inspection List, indexes, and links to GPO Access:

http://www.nara.gov/fedreg

E-mail

PENS (Public Law Electronic Notification Service) is an E-mail service for notification of recently enacted Public Laws. To subscribe, send E-mail to

listserv@www.gsa.gov

with the text message:

subscribe PUBLAWS-L your name

Use listserv@www.gsa.gov only to subscribe or unsubscribe to PENS. We cannot respond to specific inquiries.

Reference questions. Send questions and comments about the Federal Register system to:

info@fedreg.nara.gov

The Federal Register staff cannot interpret specific documents or regulations.

FEDERAL REGISTER PAGES AND DATE, JANUARY

1–200 3
201–344 4
345–688 5
689–1050 6
1051–1296 7
1297–1528 10
1529–1754 11
1755–2016 12
2017–2280 13

CFR PARTS AFFECTED DURING JANUARY

At the end of each month, the Office of the Federal Register publishes separately a List of CFR Sections Affected (LSA), which lists parts and sections affected by documents published since the revision date of each title.

3 CFR

Executive Orders:
12543 (See Notice of December 29, 1999) 199
12544 (See Notice of December 29, 1999) 199

Administrative Orders:
Presidential Determinations:
No. 2000–9 of December 23, 1999 689
Notices:
December 29, 1999 199
Memorandums:
January 5, 2000 2279

7 CFR

6 1297
201 1704
371 1298
984 1755
997 1302
998 1302
999 1302
1220 1

Proposed Rules:
800 75
868 78
930 672
979 1347
1280 1825
1301 1825
1304 1825
1305 1825
1306 1825
1307 1825
1308 1825

9 CFR

93 345
94 ..... 1304, 1529
96 1304
303 201
381 201

Proposed Rules:
54 1074
79 1074
130 391

10 CFR

431 2227

Proposed Rules:
50 1829
430 2077
490 1831

11 CFR

Proposed Rules:
100 1074
102 1074
103 1074
104 1074
106 1074
107 1074
109 1074
110 1074
114 1074
116 1074

12 CFR

935 202
960 203

Proposed Rules:
650 1676
900 324
910 324
917 81
941 324

13 CFR

305 2017
400 1757
500 1758

Proposed Rules:
120 1349

14 CFR

23 1758
39 ... 1, 204, 205, 207, 209, 211, 213, 346, 691, 692, 695, 697, 1051, 1537, 1538, 1540, 1761, 1762, 1763, 1765, 1767, 1769, 1771, 2017, 2019
61 2022
67 2022
71 ..... 348, 349, 699, 700, 1308, 1309, 1774
97 ..... 350, 2023, 2025
141 2022
142 2022
382 352

Proposed Rules:
39 ..... 250, 251, 254, 395, 397, 399, 401, 1075, 1350, 1353, 1831, 1833, 1836, 1838, 1840
71 402
91 2077
108 560
109 560
111 560
121 2079
129 ..... 560, 2079
191 560

15 CFR

902 30

Proposed Rules:
280 1572
303 731

16 CFR

1615 1435
1700 93

18 CFR

35 810
Proposed Rules:
125 1484
225 1484
356 1484

20 CFR

Proposed Rules:
604 2080

21 CFR

101 1000
173 1776
201 7
314 1776
341 7
369 7
Proposed Rules:
216 256

22 CFR

22 352
514 352

23 CFR

655 9

24 CFR

902 1712

25 CFR

1 2026
301 2030
602 2030
Proposed Rules:
1 ....2081, 2084

26 CFR

1 ....701, 1236, 1310, 2026
49 1056
301 ....215, 263, 1059, 2030
602 ....1056, 1236, 1310, 2030
Proposed Rules:
1 ....258, 1572, 2081, 2084
40 1076

27 CFR

270 1676

29 CFR

2550 614

30 CFR

202 1542
206 1542
250 217
914 1059
946 1063
Proposed Rules:
206 1580

31 CFR

317 2034

32 CFR

Proposed Rules:
199 2085
813 419

33 CFR

117 ....353, 710, 1543, 1543, 2035, 2036, 2038
154 710
155 710
165 1065
Proposed Rules:
100 2095
110 ....1581, 2095
117 1077
165 ....1079, 2095

34 CFR

611 1780
Proposed Rules:
Ch. VI 1582

38 CFR

Ch. 1 1544
17 762
51 762
58 762

39 CFR

111 1318
Proposed Rules:
111 264
206 403

40 CFR

9 1950
49 1322
52 ....14, 16, 1068, 1545, 1787, 2039, 2042, 2046, 2048, 2052
60 1323
70 1787
82 716
141 1950
142 1950
180 ....1790, 1796, 1802, 1809
257 1842
258 1842
300 ....19, 1070
712 1548
716 1554
721 354
Proposed Rules:
52 ....104, 421, 732, 1080, 1583, 1841
70 1841
180 425
257 1814
258 1814
300 1081
503 1676

41 CFR

301-10 1268
301-11 1326
301-74 1326

42 CFR

121 1435
412 1817
413 1817
483 1817
485 1817
Proposed Rules:
405 1081

44 CFR

64 ....1554, 1555
Proposed Rules:
67 1435

45 CFR

Proposed Rules:
160 427
164 427

46 CFR

Proposed Rules:
356 646

47 CFR

0 374
51 1331
73 ....219, 220, 1823, 1824
76 375
Proposed Rules:
1 2097
22 2097
73 ....270, 1843
101 2097

48 CFR

205 2056
209 2056
235 2057
241 2058
243 2056
252 2056
253 2055
Proposed Rules:
1 1438
2 1438
4 1438
7 1438
8 1438
11 2272
15 1438
16 1438
17 1438
22 ....1438, 2272
27 1438
28 1438
31 1438
32 1438
35 1438
36 2272
37 1438
42 1438
43 1438
44 1438
45 1438
49 ....1438, 2272
51 1438
52 ....1438, 2272
53 1438
212 2104
242 ....2104, 2109
247 2104
252 2104
253 2109
1804 429
1852 429

49 CFR

1 220
572 2059
Proposed Rules:
209 1844
222 2230
229 2230
1244 732

50 CFR

17 20,
216 30
226 1584
300 59
600 221
635 2075
648 ....377, 1557, 1568
660 221
679 ....60, 65, 74, 380
Proposed Rules:
17 ....1082, 1583, 1845
18 109
216 ....270, 1083
222 270
223 105
224 1082
226 ....105, 1584
300 272
648 ....275, 431

REMINDERS

The items in this list were editorially compiled as an aid to Federal Register users. Inclusion or exclusion from this list has no legal significance.

RULES GOING INTO EFFECT JANUARY 13, 2000

DEFENSE DEPARTMENT

Acquisition regulations:
- Institutions of higher education; Federal contracts and grants; published 1-13-00
- Utility privatization; published 1-13-00

Federal Acquisition Regulation (FAR)
- Manufacturing technology program; published 1-13-00

Federal Acquisition Regulation (FAR:
- Paid advertisements; published 1-13-00

TRANSPORTATION DEPARTMENT

Federal Aviation Administration

Airworthiness directives:
- Fokker; published 12-29-99
- New Piper Aircraft, Inc.; published 12-14-99

TRANSPORTATION DEPARTMENT

Research and Special Programs Administration

Pipeline safety:
- Gas and hazardous liquid pipeline repair; published 12-14-99

TREASURY DEPARTMENT

Fiscal Service

Bonds and notes, U.S. Treasury:
- Savings bonds; regulations governing agencies for issue; published 1-13-00

COMMENTS DUE NEXT WEEK

AGRICULTURE DEPARTMENT

Animal and Plant Health Inspection Service

Interstate transportation of animals and animal products (quarantine):
- Scrapie pilot projects; comments due by 1-18-00; published 12-17-99

AGRICULTURE DEPARTMENT

Food Safety and Inspection Service

Meat and poultry inspection:
- Meat produced by advanced meat/bone separation machinery and recovery systems; comments due by 1-18-00; published 12-16-99

COMMERCE DEPARTMENT

National Oceanic and Atmospheric Administration

Endangered and threatened species:
- Cook Inlet beluga whales; depleted designation; comments due by 1-19-00; published 12-17-99

Fishery conservation and management:
- Alaska; fisheries of Exclusive Economic Zone—
  - Bering Sea and Aleutian Islands pollock; comments due by 1-20-00; published 1-5-00
- Caribbean, Gulf, and South Atlantic fisheries—
  - Gulf of Mexico and South Atlantic coastal migratory pelagic resources; comments due by 1-20-00; published 12-21-99

DEFENSE DEPARTMENT

Acquisition regulations:
- Anticompetitive teaming; comments due by 1-18-00; published 11-18-99
- Utilization of Indian organizations and Indian-owned economic enterprises; comments due by 1-18-00; published 11-18-99

DEFENSE DEPARTMENT

Navy Department

Underwater archeological research permits on submerged cultural resources; application guidelines; comments due by 1-18-00; published 11-19-99

EDUCATION DEPARTMENT

Postsecondary education:
- Higher Education Act—
  - Negotiated rulemaking committees on issues under Title IV; establishment; comments due by 1-18-00; published 12-30-99

Postsecondary eduction:
- Gaining Early Awareness and Readiness for Undergraduate Programs (GEAR UP) Program; comments due by 1-20-00; published 12-21-99

ENVIRONMENTAL PROTECTION AGENCY

Air programs; approval and promulgation; State plans for designated facilities and pollutants:
- Arizona; comments due by 1-18-00; published 12-17-99
- Indiana; comments due by 1-18-00; published 12-17-99

Air quality implementation plans; approval and promulgation; various States:
- Alabama; comments due by 1-18-00; published 12-16-99
- California; comments due by 1-21-00; published 12-22-99
- Indiana; comments due by 1-19-00; published 12-20-99
- Missouri; comments due by 1-19-00; published 12-20-99
- New Jersey; comments due by 1-18-00; published 12-17-99
- New Mexico; comments due by 1-19-00; published 12-20-99
- Pennsylvania; comments due by 1-18-00; published 12-17-99
- Rhode Island; comments due by 1-21-00; published 12-22-99
- Texas; comments due by 1-21-00; published 12-22-99

Pesticide programs:
- Antimicrobial pesticide products; registration procedures and labeling standards, etc.; comments due by 1-18-00; published 11-16-99

Pesticides; tolerances in food, animal feeds, and raw agricultural commodities:
- Herbicide safener HOE-107892 and metabolites; comments due by 1-21-00; published 11-22-99
- Paraquat; comments due by 1-21-00; published 11-22-99

Solid wastes:
- Residential, commercial, and institutional solid waste; guideline revisions; comments due by 1-18-00; published 12-17-99
- Storage and collection of residential, commercial, and institutional solid waste; comments due by 1-18-00; published 12-17-99

Water programs:
- Clean Water Act—
  - Water quality planning and management; National Pollutant Discharge Elimination System program and Federal antidegradation policy, etc.; comments due by 1-20-00; published 10-27-99

FEDERAL COMMUNICATIONS COMMISSION

Radio services, special:
- Fixed microwave services—
  - 24 GHz band; licensing and service rules; comments due by 1-19-00; published 12-20-99
  - Local multipoint distribution service; comments due by 1-21-00; published 12-21-99
- Maritime services—
  - Los Angeles and Long Beach, CA; 156.250 MHz frequency availability for port operations; comments due by 1-18-00; published 12-21-99

FEDERAL HOUSING FINANCE BOARD

Federal home loan bank system:
- Corporate governance responsibilities devolution; comments due by 1-20-00; published 12-21-99

HEALTH AND HUMAN SERVICES DEPARTMENT

Inspector General Office, Health and Human Services Department

Health care programs; fraud and abuse:
- Health Insurance Portability and Accountability Act—
  - Medicare and State health care programs; anti-kickback statute for shared risk arrangements; statutory exception; comments due by 1-18-00; published 11-19-99

INTERIOR DEPARTMENT

Fish and Wildlife Service

Endangered and threatened species:
- Findings on petitions, etc.—
  - Alabama beach mouse, etc.; comments due by 1-18-00; published 11-18-99
  - Straight-horned markhor; comments due by 1-21-00; published 9-23-99

INTERIOR DEPARTMENT

Surface Mining Reclamation and Enforcement Office

Permanent program and abandoned mine land

reclamation plan submissions:
Pennsylvania; comments due by 1-18-00; published 12-17-99

JUSTICE DEPARTMENT
Privacy Act; implementation; comments due by 1-18-00; published 12-16-99

NUCLEAR REGULATORY COMMISSION
Rulemaking petitions:
Stein, Michael; comments due by 1-18-00; published 11-3-99

POSTAL RATE COMMISSION
Practice and procedure:
Procedings; efficiency improvement; comments due by 1-21-00; published 12-28-99

POSTAL SERVICE
Domestic Mail Manual:
Standard Mail destination entry mailings; procedure changes; comments due by 1-21-00; published 12-22-99

RAILROAD RETIREMENT BOARD
Railroad Retirement Act:
Disability determination; comments due by 1-18-00; published 11-18-99
Disability determination—
Reviews for medical recovery of annuitants; discontinuance; comments due by 1-18-00; published 11-18-99
Railroad Unemployment Insurance Act:
Remuneration; definition; comments due by 1-18-00; published 11-16-99

SECURITIES AND EXCHANGE COMMISSION
Securities:
Proxy and information statements; delivery to households; comments due by 1-18-00; published 11-16-99

TRANSPORTATION DEPARTMENT
Coast Guard
Ports and waterways safety:
Cape Cod Canal; arrival notification and Year 2000 (Y2K) reporting requirements for transiting vessels; regulated navigation area; comments due by 1-21-00; published 12-22-99

TRANSPORTATION DEPARTMENT
Federal Aviation Administration
Airworthiness directives:
Airbus; comments due by 1-20-00; published 12-21-99
AlliedSignal, Inc.; comments due by 1-18-00; published 11-19-99
Ayres Corp.; comments due by 1-21-00; published 11-24-99
Bell Helicopter Textron, Inc.; comments due by 1-18-00; published 11-16-99
Boeing; comments due by 1-18-00; published 11-19-99
Eurocopter France; comments due by 1-18-00; published 11-18-99
General Electric Aircraft Engines; comments due by 1-18-00; published 11-19-99
McDonnell Douglas; comments due by 1-21-00; published 12-7-99
Raytheon; comments due by 1-20-00; published 12-6-99
Airworthiness standards:
Special conditions—
McDonnell Douglas DC-9-30 series airplanes; comments due by 1-18-00; published 12-3-99
Class E airspace; comments due by 1-18-00; published 12-17-99
Commercial space transportation:
Licensed reentry activities; financial responsibility requirements; comments due by 1-21-00; published 12-13-99

TRANSPORTATION DEPARTMENT
National Highway Traffic Safety Administration
Motor vehicle safety standards:
Motorcycle brake systems; comments due by 1-18-00; published 11-17-99

TREASURY DEPARTMENT
Customs Service
Customs financial and accounting procedure:
Endorsement of checks deposited; comments due by 1-18-00; published 11-17-99
Mechandise, special classes:
Products of forced or indentured child labor; prohibited importation and seizure; comments due by 1-18-00; published 11-17-99

TREASURY DEPARTMENT
Fiscal Service
Federal claims collection:
State income tax obligations; tax refund payments offset; comments due by 1-19-00; published 12-20-99

TREASURY DEPARTMENT
Internal Revenue Service
Income taxes:
Charitable remainder trusts; prevention of abuse; comments due by 1-19-00; published 10-21-99

LIST OF PUBLIC LAWS

Note: The List of Public Laws for the first session of the 106th Congress has been completed and will resume when bills are enacted into law during the second session of the 106th Congress, which convenes on January 24, 2000.

A Cumulative List of Public Laws for the first session of the 106th Congress will be published in the **Federal Register** on December 30, 1999.

Last List December 21, 1999.