11–16–99
Vol. 64 No. 220
Pages 62089–62560

federal register

Tuesday
November 16, 1999

The **FEDERAL REGISTER** is published daily, Monday through Friday, except official holidays, by the Office of the Federal Register, National Archives and Records Administration, Washington, DC 20408, under the Federal Register Act (44 U.S.C. Ch. 15) and the regulations of the Administrative Committee of the Federal Register (1 CFR Ch. I). The Superintendent of Documents, U.S. Government Printing Office, Washington, DC 20402 is the exclusive distributor of the official edition.

The **Federal Register** provides a uniform system for making available to the public regulations and legal notices issued by Federal agencies. These include Presidential proclamations and Executive Orders, Federal agency documents having general applicability and legal effect, documents required to be published by act of Congress, and other Federal agency documents of public interest.

Documents are on file for public inspection in the Office of the Federal Register the day before they are published, unless the issuing agency requests earlier filing. For a list of documents currently on file for public inspection, see http://www.nara.gov/fedreg.

The seal of the National Archives and Records Administration authenticates the Federal Register as the official serial publication established under the Federal Register Act. Under 44 U.S.C. 1507, the contents of the **Federal Register** shall be judicially noticed.

The **Federal Register** is published in paper and on 24x microfiche. It is also available online at no charge as one of the databases on GPO Access, a service of the U.S. Government Printing Office.

The online edition of the **Federal Register** is issued under the authority of the Administrative Committee of the Federal Register as the official legal equivalent of the paper and microfiche editions (44 U.S.C. 4101 and 1 CFR 5.10). It is updated by 6 a.m. each day the **Federal Register** is published and it includes both text and graphics from Volume 59, Number 1 (January 2, 1994) forward.

GPO Access users can choose to retrieve online **Federal Register** documents as TEXT (ASCII text, graphics omitted), PDF (Adobe Portable Document Format, including full text and all graphics), or SUMMARY (abbreviated text) files. Users should carefully check retrieved material to ensure that documents were properly downloaded.

On the World Wide Web, connect to the **Federal Register** at http://www.access.gpo.gov/nara. Those without World Wide Web access can also connect with a local WAIS client, by Telnet to swais.access.gpo.gov, or by dialing (202) 512-1661 with a computer and modem. When using Telnet or modem, type swais, then log in as guest with no password.

For more information about GPO Access, contact the GPO Access User Support Team by E-mail at gpoaccess@gpo.gov; by fax at (202) 512–1262; or call (202) 512–1530 or 1–888–293–6498 (toll free) between 7 a.m. and 5 p.m. Eastern time, Monday–Friday, except Federal holidays.

The annual subscription price for the **Federal Register** paper edition is $555, or $607 for a combined **Federal Register,** Federal Register Index and List of CFR Sections Affected (LSA) subscription; the microfiche edition of the **Federal Register** including the Federal Register Index and LSA is $220. Six month subscriptions are available for one-half the annual rate. The charge for individual copies in paper form is $8.00 for each issue, or $8.00 for each group of pages as actually bound; or $1.50 for each issue in microfiche form. All prices include regular domestic postage and handling. International customers please add 25% for foreign handling. Remit check or money order, made payable to the Superintendent of Documents, or charge to your GPO Deposit Account, VISA, MasterCard or Discover. Mail to: New Orders, Superintendent of Documents, P.O. Box 371954, Pittsburgh, PA 15250–7954.

There are no restrictions on the republication of material appearing in the **Federal Register.**

How To Cite This Publication: Use the volume number and the page number. Example: 64 FR 12345.

SUBSCRIPTIONS AND COPIES

PUBLIC	
Subscriptions:	
Paper or fiche	**202–512–1800**
Assistance with public subscriptions	**512–1806**
General online information	**202–512–1530; 1–888–293–6498**
Single copies/back copies:	
Paper or fiche	**512–1800**
Assistance with public single copies	**512–1803**
FEDERAL AGENCIES	
Subscriptions:	
Paper or fiche	**523–5243**
Assistance with Federal agency subscriptions	**523–5243**

FEDERAL REGISTER WORKSHOP

THE FEDERAL REGISTER: WHAT IT IS AND HOW TO USE IT

FOR: Any person who uses the Federal Register and Code of Federal Regulations.

WHO: Sponsored by the Office of the Federal Register.

WHAT: Free public briefings (approximately 3 hours) to present:

1. The regulatory process, with a focus on the Federal Register system and the public's role in the development regulations.
2. The relationship between the Federal Register and Code of Federal Regulations.
3. The important elements of typical Federal Register documents.
4. An introduction to the finding aids of the FR/CFR system.

WHY: To provide the public with access to information necessary to research Federal agency regulations which directly affect them. There will be no discussion of specific agency regulations.

WASHINGTON, DC

WHEN: December 7, 1999 at 9:00 am.

WHERE: Office of the Federal Register
Conference Room
800 North Capitol Street, NW.
Washington, DC
(3 blocks north of Union Station Metro)

RESERVATIONS: 202–523–4538

Printed on recycled paper.

Contents

Federal Register

Vol. 64, No. 220

Tuesday, November 16, 1999

Agriculture Department
See Animal and Plant Health Inspection Service
See Food and Nutrition Service
See Forest Service
NOTICES
Agency information collection activities:
Submission for OMB review; comment request, 62164–62165

Animal and Plant Health Inspection Service
RULES
User fees:
Agricultural quarantine and inspection services, 62089–62096

Architectural and Transportation Barriers Compliance Board
PROPOSED RULES
Americans with Disabilities Act and Architectural Barriers Act; implementation:
Accessibility guidelines—
Buildings and facilities; construction and alterations, 62247–62538

Army Department
NOTICES
Environmental statements; availability, etc.:
Base realignment and closure—
Oakland Army Base, CA, 62176–62177

Centers for Disease Control and Prevention
NOTICES
Agency information collection activities:
Proposed collection; comment request, 62207
Meetings:
Public Health Service Activities and Research at DOE Sites Citizens Advisory Comittee, 62207–62208
Scientific Counselors Board, 62208

Coast Guard
RULES
Drawbridge operations:
New Jersey, 62113–62114

Commerce Department
See International Trade Administration
See National Oceanic and Atmospheric Administration
NOTICES
Agency information collection activities:
Submission for OMB review; comment request, 62166–62167

Customs Service
PROPOSED RULES
Merchandise entry:
Anticounterfeiting Consumer Protection Act; Customs entry documentation, 62135

Defense Department
See Army Department

Education Department
NOTICES
Agency information collection activities:
Proposed collection; comment request, 62177–62178
Submission for OMB review; comment request, 62178

Employment Standards Administration
NOTICES
Agency information collection activities:
Proposed collection; comment request, 62221–62222

Energy Department
See Federal Energy Regulatory Commission
NOTICES
Grants and cooperative agreements; availability, etc.:
Development of Technologies and Capabilities for Fossil Energy R&D Program, 62178–62179
Metal casting industries of the future, 62179
Nuclear Energy Research Initiative program, 62179–62183

Environmental Protection Agency
RULES
Air programs; approval and promulgation; State plans for designated facilities and pollutants:
Nebraska, 62114–62117
Vermont, 62117–62119
PROPOSED RULES
Air programs; approval and promulgation; State plans for designated facilities and pollutants:
Nebraska, 62144–62145
Vermont, 62145
Air quality implementation plans:
Preparation, adoption, and submittal—
Motor vehicle inspection/maintenance program requirements, 62144
Pesticide programs:
Antimicrobial pesticide products; registration procedures and labeling standards, etc., 62145–62146
NOTICES
Agency information collection activities:
Submission for OMB review; comment request, 62192–62193
Air pollution control:
Acid rain program—
Nitrogen oxides compliance plan, 62193–62194
Ambient air quality standards, national—
New York-New Jersey-Connecticut severe ozone nonattainment area; attainment determination, 62194–62195
Air quality implementation plans; approval and promulgation; various States:
Delaware, 62195–62196
District of Columbia, 62196
Maryland, 62196–62197
New Jersey, 62197–62198
Pennsylvania, 62198–62200
Grants and cooperative agreements; availability, etc.:
Brownfields Job Training and Development Demonstration Pilots, 62200–62201

Equal Employment Opportunity Commission
NOTICES
Meetings; Sunshine Act, 62201

Federal Aviation Administration
RULES
Airworthiness directives:
Bell Helicopter Textron, Inc., 62105–62106
Boeing, 62109–62110
Eurocopter France, 62106–62108
Learjet, 62108–62109
PROPOSED RULES
Air traffic operating and flight rules, etc.:
Grand Canyon National Park, AZ—
Special flight rules in vicinity, 62133–62135
Airworthiness directives:
Airbus, 62131–62133
Raytheon, 62129–62131
NOTICES
Passenger facility charges; applications, etc.:
Minneapolis-St. Paul International Airport, MN, 62242–62243
Stewart International Airport, NY, 62243–62244

Federal Communications Commission
RULES
Common carrier services:
Federal-State Joint Board on Universal Service—
Universal service order, 62120–62123
Practice and procedure:
Wireless transfers and assignments; time extension for consummation and notification, 62119–62120
Television broadcasting:
Television satellite stations; policy and rules review, 62123–62127
PROPOSED RULES
Radio frequency devices:
Radio services operating below 30 MHz; conducted emission limits, 62159–62161
NOTICES
Agency information collection activities:
Reporting and recordkeeping requirements, 62201–62203
Submission for OMB review; comment request, 62203–62204
Rulemaking proceedings; petitions filed, granted, denied, etc., 62204

Federal Deposit Insurance Corporation
RULES
Insured State nonmember banks which are municipal securities dealers, 62103–62105
Practice and procedure:
Technical amendments, 62096–62103

Federal Energy Regulatory Commission
NOTICES
Agency information collection activities:
Proposed collection; comment request, 62183–62185
Electric rate and corporate regulation filings:
Tennessee Gas Pipeline Co., et al., 62187–62191
Applications, hearings, determinations, etc.:
El Paso Natural Gas Co., 62185
Iroquois Gas Transmission System, L.P., 62185–62186
Mojave Pipeline Co., 62186
Northern Natural Gas Co., 62186
Pacific Gas & Elctric Co., 62186–62187
Seminole Electric Cooperative, Inc. et al, 62187
U-T Offshore System, L.L.C., 62187

Federal Highway Administration
NOTICES
Environmental statements; notice of intent:
Licoln County, NM, 62244

Federal Reserve System
NOTICES
Banks and bank holding companies:
Change in bank control, 62204–62205
Formations, acquisitions, and mergers, 62204–62205
Permissible nonbanking activities, 62204
Change in bank control
Formations, acquisitions, and mergers, 62205–62206
Meetings; Sunshine Act, 62206

Fish and Wildlife Service
PROPOSED RULES
National Wildlife Refuge System:
Land usage; compatibility policy, 62163
NOTICES
Environmental statements; notice of intent:
Lake Champlain, NY; sea lamprey control proposal, 62213–62215
Meetings:
Aquatic Nuisance Species Task Force, 62215
United States Coral Reef Task Options, 62215–62217
National Wildlife Regusge System:
Land usage; compatibility regulations, 62217

Food and Drug Administration
RULES
Human drugs:
Progestational drug products; patient-directed labeling, 62110–62112
NOTICES
Reports and guidance documents; availability, etc.:
Medical devices—
Medical gloves; testing to support expiration date labeling claim, 62208–62209
Progestational drug products; physician- and patient-directed labeling—
Warnings and contraindications, 62209

Food and Nutrition Service
NOTICES
Agency information collection activities:
Proposed collection; comment request, 62165

Forest Service
NOTICES
Appealable decisions; legal notice:
Northern Region, 62165–62166
Meetings:
Lake Tahoe Basin Federal Advisory Committee, 62166

General Services Administration
PROPOSED RULES
Federal property management:
Personal property; transfer of excess, 62146–62159

Health and Human Services Department
See Centers for Disease Control and Prevention
See Food and Drug Administration
See National Institutes of Health
NOTICES
Meetings:
National Bioethics Advisory Commission, 62206–62207

Indian Affairs Bureau
NOTICES
Agency information collection activities:
Submission for OMB review; comment request, 62217–62218

Information Security Oversight Office
RULES
Classified national security information:
Multi-agency declassification issues; uniform referral standard; correction, 62113

Interior Department
See Fish and Wildlife Service
See Indian Affairs Bureau
See National Park Service

International Trade Administration
NOTICES
Antidumping:
Barium chloride from—
China, 62168–62169
Electrolytic manganese dioxide from—
Greece, 62169–62175
Pressure sensitive plastic tape from—
Italy, 62175–62176
Antidumping and countervailing duties:
Administrative review requests, 62167–62168
Five-year (sunset) reviews—
Final results and revocations, 62167

Justice Department
See National Institute of Corrections

Labor Department
See Employment Standards Administration
See Occupational Safety and Health Administration
NOTICES
Meetings:
Presidential Task Force on Employment of Adults with Disabilities, 62220–62221

Maritime Administration
NOTICES
Meetings:
Voluntary Intermodal Sealift Agreement / Joint Planning Advisory Group, 62244–62245

National Archives and Records Administration
See Information Security Oversight Office
NOTICES
Agency information collection activities:
Proposed collection; comment request, 62222–62223
Agency records schedules; availability, 62223–62225
Electronic copies previously covered by General Records Schedule 20; records schedule availability and comment request, 62225–62226

National Credit Union Administration
NOTICES
Meetings; Sunshine Act, 62226–62227

National Institute of Corrections
NOTICES
Grants and cooperative agreements; availability, etc.:
Management training curriculum; development, 62220

National Institutes of Health
NOTICES
Meetings:
National Cancer Institute, 62209–62211
National Center for Complementary & Alternative Medicine, 62211–62212
National Center for Research Resources, 62211
National Eye Institute, 62212
National Institute of Allergy and Infectious Diseases, 62212
Scientific Review Center, 62212–62213

National Oceanic and Atmospheric Administration
RULES
Fishery conservation and management:
West Coast States and Western Pacific fisheries—
West Coast salmon, 62127–62128

National Park Service
NOTICES
Environmental statements; availability, etc.:
Big Cypress National Preserve, FL—
Off-road vehicles management, 62218
Meetings:
Boston Harbor Islands Advisory Council, 62218–62219
National Register of Historic Places:
Pending nominations, 62219–62220

Nuclear Regulatory Commission
NOTICES
Environmental statements; availability, etc.:
Duquesne Light Co. et al., 62233–62234
Meetings:
Aging management programs; license renewal public workshop, 62234–62235
Reactor Safeguards Advisory Committee, 62235–62236
Meetings; Sunshine Act, 62236–62237
Applications, hearings, determinations, etc.:
Commonwealth Edison Co., 62227
Molycorp, Inc., 62227–62228
Niagara Mohawk Power Corp., 62228–62230
Northeast Nuclear Energy Co., et al., 62230–62231
Wolf Creek Nuclear Operating Corp., 62231–62233

Occupational Safety and Health Administration
PROPOSED RULES
State plans; development, enforcement, etc.:
Nevada, 62138–62144

Presidential Documents
PROCLAMATIONS
Special observances
Veterans Day (Proc. 7248), 61473-61474
Editorial Note: In the Federal Register Issue of November 12,1999, the beginning page number for Presidential Proclamation 7248 should have appeared as ''61473'' instead of ''1''.

Public Health Service
See Centers for Disease Control and Prevention
See Food and Drug Administration
See National Institutes of Health

Railroad Retirement Board
PROPOSED RULES
Railroad Unemployment Insurance Act:
Remuneration; definition, 62135–62138

Research and Special Programs Administration
PROPOSED RULES
Hazardous materials:
Hazardous materials transportation—
Cargo tank rollover damage protection requirements, 62161–62162

Securities and Exchange Commission
RULES
Securities:
Disclosure documents; delivery to households, 62539–62547
PROPOSED RULES
Securities:
Proxy and information statements; delivery to households, 62548–62559
NOTICES
Investment Company Act of 1940:
Exemption applications—
J.P. Morgan & Co., Inc., 62237
Self-regulatory organizations; proposed rule changes:
Chicago Board Options Exchange, Inc., 62238–62239
Philadelphia Stock Exchange, Inc., 62239–62241

Social Security Administration
NOTICES
Agency information collection activities:
Proposed collection; comment request, 62241

State Department
NOTICES
Agency information collection activities:
Proposed collection; comment request, 62241–62242
Art objects; importation for exhibition:
Stroganoff: The Palace and Collections of a Russian Noble Family, 62242
Meetings:
Historical Diplomatic Documentation Advisory Committee, 62242

Surface Transportation Board
NOTICES
Rail carriers:
Control exemptions—
RailAmerica, Inc., 62245–62246

Transportation Department
See Coast Guard
See Federal Aviation Administration
See Federal Highway Administration
See Maritime Administration
See Research and Special Programs Administration
See Surface Transportation Board

Treasury Department
See Customs Service
RULES
Organization, functions, and authority delegations:
Official designation in case of absence, disability, or vacancy, 62112–62113

Separate Parts In This Issue

Part II
Architectural and Transportation Barriers Compliance Board, 62247–62538

Part III
Securities and Exchange Commission, 62539–62559

Reader Aids
Consult the Reader Aids section at the end of this issue for phone numbers, online resources, finding aids, reminders, and notice of recently enacted public laws.

CFR PARTS AFFECTED IN THIS ISSUE

A cumulative list of the parts affected this month can be found in the Reader Aids section at the end of this issue.

7 CFR
354 62089

12 CFR
308 62096
330 62096
343 62103

14 CFR
39 (4 documents) 62105, 62106, 62108, 62109

Proposed Rules:
39 (2 documents) 62129, 62131
93 62133

17 CFR
230 62540
240 62540
270 62540

Proposed Rules:
230 62548
240 62548

19 CFR

Proposed Rules:
141 62135

20 CFR

Proposed Rules:
322 62135

21 CFR
310 62110

29 CFR

Proposed Rules:
1952 62138

31 CFR
18 62112

32 CFR
2001 62113

33 CFR
117 62113

36 CFR

Proposed Rules:
1190 62248
1191 62248

40 CFR
62 (2 documents) 62114, 62117

Proposed Rules:
51 62144
62 (2 documents) 62144, 62145
152 62145
156 62145

41 CFR

Proposed Rules:
101-43 62146
102-36 62146

47 CFR
1 62119
54 62120
73 62123

Proposed Rules:
15 62159
18 62159

49 CFR

Proposed Rules:
178 62161

50 CFR
660 62127

Proposed Rules:
25 62163
26 62163
29 62163

Rules and Regulations

Federal Register
Vol. 64, No. 220
Tuesday, November 16, 1999

This section of the FEDERAL REGISTER contains regulatory documents having general applicability and legal effect, most of which are keyed to and codified in the Code of Federal Regulations, which is published under 50 titles pursuant to 44 U.S.C. 1510.

The Code of Federal Regulations is sold by the Superintendent of Documents. Prices of new books are listed in the first FEDERAL REGISTER issue of each week.

DEPARTMENT OF AGRICULTURE

Animal and Plant Health Inspection Service

7 CFR Part 354

[Docket No. 98–073–2]

RIN 0579–AB05

User Fees; Agricultural Quarantine and Inspection Services

AGENCY: Animal and Plant Health Inspection Service, USDA.

ACTION: Final rule.

SUMMARY: We are amending the user fee regulations by adjusting the fees charged for certain agricultural quarantine and inspection services we provide in connection with certain commercial vessels, commercial trucks, commercial railroad cars, commercial aircraft, and international airline passengers arriving at ports in the customs territory of the United States. The adjusted fees cover part of fiscal year 2000 and all of fiscal years 2001 through 2002. We have determined that the fees must be adjusted to reflect the anticipated actual cost of providing these services through FY 2002.

EFFECTIVE DATE: December 16, 1999.

FOR FURTHER INFORMATION CONTACT: For information concerning program operations, contact Mr. Jim Smith, Operations Officer, Program Support, PPQ, APHIS, 4700 River Road Unit 60, Riverdale, MD 20737–1236; (301) 734–8295. For information concerning rate development, contact Ms. Donna Ford, PPQ User Fees Section Head, FSSB, BASE, ABS, APHIS, 4700 River Road Unit 54, Riverdale, MD 20737–1232; (301) 734–8351.

SUPPLEMENTARY INFORMATION:

Background

Section 2509(a) of the Food, Agriculture, Conservation, and Trade Act of 1990 (21 U.S.C. 136a), referred to below as the FACT Act, authorizes the Animal and Plant Health Inspection Service (APHIS) to collect user fees for agricultural quarantine and inspection (AQI) services. The FACT Act was amended by section 504 of the Federal Agricultural Improvement and Reform Act of 1996 (Pub. L. 104–127) on April 4, 1996.

The FACT Act, as amended, authorizes APHIS to collect user fees for providing AQI services in connection with the arrival, at a port in the customs territory of the United States, of:

- Commercial vessels.
- Commercial trucks.
- Commercial railroad cars.
- Commercial aircraft.
- International airline passengers.

According to the FACT Act, as amended, these user fees should recover the costs of:

- Providing the AQI services listed above.
- Providing preclearance or preinspection at a site outside the customs territory of the United States to such passengers and vehicles.
- Administering the user fee program.
- Maintaining a reasonable balance in the Agricultural Quarantine Inspection User Fee Account (AQI account).

On July 24, 1997, we published in the **Federal Register** (62 FR 39747–39755, Docket No. 96–038–3) a rule amending the user fees and setting user fees in advance for AQI services for fiscal years 1997 through 2002.

APHIS has had to provide AQI services beyond what we anticipated when the currently scheduled fees were set in 1997. The increases in services stem from an increase in international trade and travel, necessitating more inspections at ports of arrival; changes in our regulations that result in our having to inspect additional imported articles; and enhanced efforts to crack down on the smuggling of agricultural commodities.

On August 9, 1999, we published in the **Federal Register** (64 FR 43103–43114, Docket No. 98–073–1) a proposal to amend the existing user fees for providing AQI services in connection with the arrival, at a port in the customs territory of the United States, of commercial vessels, commercial trucks, commercial railroad cars, commercial aircraft, and international airline passengers. We proposed to amend the user fees for these services for fiscal years 2000 through 2002 to ensure that we recover the anticipated actual cost of providing these services through FY 2002.

We solicited comments concerning our proposal for 60 days ending October 8, 1999. We received eight comments by that date. They were from State Government officials and representatives of the produce and airline industries. Four of the comments were supportive. One of the comments requested us to clarify part of our proposal. Three commenters opposed the rule. Concerns and questions raised by the commenters are discussed below by topic.

Collection of International Airline Passenger User Fees

Two commenters asked us to clarify what fee airlines, travel agents, and others who issue international air travel tickets should collect from ticket purchasers or passengers if the passenger is traveling after the effective date of a new fee but is purchasing a ticket before the effective date of the new fee.

Under § 354.3(f)(4)(i), persons who issue international airline tickets or travel documents are responsible for collecting the APHIS international airline passenger user fee from ticket purchasers. In order to make the implementation of new user fees easier for those who issue tickets, APHIS requires that when user fees are paid by passengers to ticket issuers in advance of travel, the proper user fee to be collected from a passenger is the fee applicable at the time tickets are sold. Further, under § 354.3(f)(4)(i)(A), in the event that ticket sellers do not collect the APHIS user fee when tickets are sold, the air carrier must collect the user fee from the passenger upon departure. Under this scenario, the proper user fee to be collected from a passenger by the carrier is the fee applicable at the time of departure. We are adding a footnote to the table of fees for airline passengers to make these requirements clearer.

Rationale and Need for Amending AQI User Fees

One commenter suggested that APHIS should be able to pay the cost of providing new and additional AQI services and equipment with user fees collected under the existing fee schedule, based on the rationale that

increasing volumes of user fee collections that result from increasing numbers of airline passengers will pay for additional AQI services by themselves.

We do not agree with the commenter's position. As stated in our proposal, APHIS has been required to process increased volumes of international air passengers and aircraft and has struggled to maintain an adequate level of service to some airports due to terminal expansions and reorganizations. We need to establish additional inspection facilities, purchase necessary x-ray equipment, and add personnel in order to process passengers and aircraft quickly and efficiently. Further, additional personnel are needed not only to staff new inspection facilities, but also to supplement existing inspection crews. By increasing the proportion of inspectors available in relation to the number of users requiring services, APHIS will be able to conduct more inspections, thereby better ensuring against the introduction into the United States of harmful plant pests. Since the currently scheduled user fees do not contain an allowance for purchasing additional x-ray equipment and increasing the numbers of AQI inspectors, we need to revise the fees to ensure that we have the necessary funds available to provide an adequate level of AQI service.

Another commenter stated that we have ''attributed cost overruns to a reduction in the rate of international passengers paying an inspection fee.'' This is incorrect. In our proposal, we stated that we have had to provide AQI services beyond what we anticipated when the currently scheduled fees were set in 1997. The increases in services stem from an increase in international trade and travel, among other things.

One commenter claimed that the existing AQI user fee schedule will provide APHIS with adequate funds to pay for program costs, including the new costs explained in our proposal. The commenter interpreted the information provided in our proposal to mean that APHIS needs to increase user fees and receipts because not all of the user fees collected from users over the past few years have been available to APHIS due to appropriations shortfalls. The commenter was concerned that APHIS will not spend additional money collected to provide additional AQI services.

The commenter is correct that, because expenditures are linked to appropriations, not all of the user fees collected from users over the past few years have been available to APHIS. However, this is not the reason we are increasing our AQI user fees. Over the past several years, demand for our AQI services has increased. Serious pests have entered the United States despite our efforts. In order to ensure continuous AQI services, we have been forced to draw on our reserve fund. Our reserve fund is now insufficient to ensure continuous and effective service and needs to be gradually rebuilt. User fee collections are the only means APHIS has to fund the AQI program. Under these circumstances, we have no choice but to amend our fees accordingly, both to fund services we provide and ensure an adequate reserve.

Setting AQI User Fees in Advance

One commenter noted that continual adjustment of AQI user fees is problematic for the industry and does not allow for adequate business planning.

When we published our 1997 proposal to set user fees in advance for AQI services for fiscal years 1997 through 2002 (62 FR 3823–3830, Docket No. 96–038–1), we stated that we were acting on behalf of affected industries who suggested that industry would be able to plan for the effects of fee changes more effectively if fees were set in advance. However, as stated previously in this document and in our proposal, APHIS has had to provide AQI services beyond what we anticipated when the currently scheduled fees were set in 1997. To recover the costs of providing these services, we must amend our fees. In our 1997 proposal, we stated that if reserve levels were drawn too low, we would publish, for public comment, proposed fee increases in the **Federal Register**. We regret any inconvenience these fee adjustments may cause affected industries, but they are necessary to ensure an adequate level of AQI service.

Need for Additional Equipment and Personnel

One commenter questioned whether additional personnel and equipment are necessary to provide adequate AQI services and stated that APHIS had not adequately explained the basis for some additional equipment purchases and personnel increases or justified the corresponding need for fee increases.

Particularly at airports, APHIS has struggled to maintain an adequate level of service due to new and expanding air terminals and demands for faster processing time. As explained in our proposal, along with other agencies in the Federal Inspection Service (FIS), our goal is to clear international airline passengers through all required FIS inspections in 30 minutes or less. To accomplish this goal, we need additional personnel and equipment to process increasing volumes of international air passengers and imported agricultural commodities effectively and efficiently.

As stated in the proposed rule, we anticipate hiring 511 new inspectors. They will be assigned to high-volume, high-risk ports, with distribution as follows: 51 at seaports; 57 at land border ports (39 to inspect commercial trucks and 18 to inspect railroad cars); and 403 at airports (137 to inspect commercial aircraft and 266 to inspect passengers). Our projected costs for these new positions include both salaries and vehicles, since many of these inspectors must travel from one location to another to perform inspections. These costs were set out in the proposed rule, and the costs associated with the additional inspectors are discussed further, below, under the heading ''Personnel Costs.''

Our projected costs for new x-ray equipment include the costs of both new, advanced technology equipment for our busiest ports (primarily airports) and additional and replacement equipment for other ports. The costs of this equipment were set out in the proposed rule and are discussed further, below, under the heading ''Cost of X-ray Equipment.''

Funding for the additional inspectors and equipment can only come from user fees. Use of user fees for these purposes is fully compatible with the recommendations of the newly completed report, ''Safeguarding American Plant Resources.'' [1] This report is based on a review of APHIS' safeguarding systems that was conducted at APHIS' request by a panel of external stakeholders assembled by the National Plant Board, an organization of State plant regulatory officials. The review was prompted by the recognition, both within and outside the Agency, that our safeguading systems are being increasingly challenged by changes in global travel and trade.

Cost of Services

One commenter questioned why commercial aircraft inspection fees cost nearly 15 times as much as commercial truck fees.

In our experience, inspecting a commercial aircraft is much more involved than inspecting a commercial

[1] This report is available on the Internet at http://www.aphis.usda.gov/ppq/safeguarding/. Copies of this report may also be obtained by contacting Mr. Jim Smith at the address listed under **FOR FURTHER INFORMATION CONTACT.**

truck and, therefore, takes longer. The result is a higher user fee for aircraft.

Cost of X-ray Equipment

One commenter questioned why the high resolution x-ray equipment that APHIS plans to purchase with funds from additional user fee collections are so much more costly than equipment being deployed by the Federal Aviation Administration (FAA).

The cost of high-definition x-ray machines sought by APHIS is different than the cost of some machines deployed by the FAA because the machines are able to detect smaller volumes of agricultural products in passenger luggage at faster belt speeds than x-ray technology currently used by FAA at many airports. The development and use of high-definition x-ray technology could help us to identify as little as 10 grams of agricultural products in passenger baggage while maintaining a fast belt speed. Most x-ray technologies currently used by FAA can only detect agricultural products in passenger baggage if 200 or more grams of the products are present, but smaller quantities can carry pests that have the potential to cause significant economic losses to agriculture. Further, it is our hope that, in the future, we will be able to x-ray every piece of international passenger luggage that passes through a given airport without unreasonably delaying the passenger clearance process. The development and implementation of these high-definition x-ray technologies will allow us to see small quantities of agricultural products in baggage while processing them at high speeds. We believe these new technologies will benefit air passengers by decreasing FIS processing times while simultaneously increasing the effectiveness of the AQI program.

Personnel Costs

Two commenters questioned the calculations contained in the table in our proposed rule entitled ''Agricultural Quarantine Inspection (AQI) Program Projected Costs FY1999–2002.'' The commenters noted that it appears that, for FY 1999, $2,779,000 is allotted for 116 new employees for 2 months, suggesting that the annual salaries of these employees would be upwards of $140,000. The commenters further noted that, based on the information provided in the table, the average annual salary per new employee would then drop to approximately $75,000 in FY 2000, and then increase to approximately $87,000 and $98,000 in fiscal years 2001 and 2002, respectively.

In labeling the table in question, we neglected to state that the ''personnel increase'' estimates for fiscal years 1999 through 2002 also include increased pay costs for progressive promotions and within-grade increases for both current and future employees. To clarify the information provided in our proposal, the breakdown of our annualized personnel cost estimates for fiscal years 1999 through 2002 is shown in the table below.

PERSONNEL PAY COST INCREASES; AGRICULTURAL QUARANTINE INSPECTION (AQI) PROGRAM PROJECTED COSTS FY 1999–2002

Fiscal year	Number of new employees (cumulative)	New employees		Current employees	Total increased employee costs [3]
		Cumulative salaries [1]	Cumulative pay costs [2]	Cumulative pay costs [2]	
1999	116	$1,158,000	0	$1,620,000	$2,779,000
2000	315 + 116	24,690,000	$2,057,000	5,402,000	32,149,000
2001	40 + 431	26,958,000	3,530,000	10,515,000	41,003,000
2002	40 + 471	29,226,000	5,295,000	15,506,000	50,027,000

[1] As stated in our proposal, new salaries for FY 1999 would have reflected 2 months of service for 116 employees.
[2] Pay costs include allocations for progressive promotions and within-grade increases.
[3] These figures were provided in our proposal in the table entitled ''Agricultural Quarantine Inspection (AQI) Program Projected Costs FY 1999–2002.''

Agency Support and Departmental Charges

One commenter stated that APHIS has not justified the level of support costs and departmental charges shown in the proposed rule and questioned how we arrived at the percentage rate for support costs and departmental charges shown in the table entitled ''Agricultural Quarantine Inspection (AQI) Program Projected Costs FY1999–2002.''

In that table, support costs, including Agency overhead and departmental charges, are approximately 10.63 percent of the total AQI program cost, not 10.63 percent of the AQI program cost before support costs are added.

As we have stated in previous rulemakings, in addition to direct inspection activity costs, each user fee activity also includes the costs of program delivery, which are incurred at the State level and below. Also included was a pro rata share of the program direction and support costs, which includes items at the regional and headquarters program staff levels. Finally, each projection includes a pro rata share of Agency level support and departmental charges, which includes activities that support the entire Agency, such as recruitment and development, legislative and public affairs, regulations development, regulatory enforcement, budget and accounting services, and payroll and purchasing services. Costs for billing and collection services and legal counsel that are directly related to user fee activities are directly added to the user fee activities they support and are not included in the proration of Agency level costs. No government program or business entity can operate without overhead, and including such costs in pricing goods or services is a standard cost accounting principle.

Productivity and Efficiency in the AQI Program

One commenter suggested that APHIS should make every effort possible to improve the productivity of the existing AQI workforce before increasing user fees to purchase new equipment and hire additional personnel. The commenter further stated that APHIS has not adequately explained how the additional resources that it plans to acquire with new fees will increase productivity.

We are always looking for innovative approaches to improve our efficiency and productivity. Along with manual inspections, we use alternative inspection methods and technologies such as automated information systems, x-ray systems, and specially trained detector dogs.

We try to allocate our inspection personnel and equipment as efficiently as possible, based on risk assessment. With statistics obtained via the AQI Monitoring Program, we are able to determine which ports are relatively more likely to present high pest risks, and we use those statistics to determine how to allocate resources. For example, under the AQI monitoring program, we conduct a fixed number of detailed inspections each day for each category of service. Hypothetically, we might survey every 25th international air passenger bag by pulling it aside and performing the same detailed inspection that we would perform if there were reason to suspect that the bag contained a plant pest. We compile the data from these surveys at each port and rate the relative effectiveness of the inspection system at those ports. Then we compare the effectiveness ratings of various ports and determine how to allocate inspectors from there.

As stated in our proposal, APHIS is continually requested to process international airline passengers faster, although we need to inspect passengers and their baggage thoroughly to safeguard against the introduction of harmful pests and diseases of animals and plants. We are committed to processing passengers as quickly as possible, without jeopardizing the success of the AQI program, whose purpose is to prevent the introduction of foreign plant and animal pests and diseases which are harmful to this country's agriculture; however, faster processing requires additional personnel and equipment.

As stated previously in this document, we need to purchase new x-ray equipment for placement in new inspection stations in new airport terminals. All the *new* x-ray equipment is destined for use at airports around the country to speed up the passenger inspection process and make it more efficient.

In cases where we are replacing old x-ray equipment, we are doing so to increase the effectiveness of our inspection program. Many x-ray machines currently in use are outdated and are not always able to help us detect agricultural commodities in passenger luggage or cargo. As stated earlier in this document, due to the increased risk of pest introduction that follows from increased levels of international travel and trade, we need to upgrade these older machines in order to protect American agriculture and serve the best interests of our stakeholders.

Rebuilding the Reserve and Additional Collections

One commenter suggested that the size of the AQI reserve fund (25 percent of annual costs) is unreasonable and that a smaller reserve (5 percent of annual costs) is all that is necessary. The commenter also questioned why the additional collections we receive due to rounding of fees are no longer sufficient to maintain a reasonable balance in the reserve.

APHIS' user fee authority provides for the maintenance of a reasonable balance in the user fee account. As stated in our proposal, we believe it is necessary to maintain a reserve of 25 percent of the annual AQI program costs due to the fact that approximately 85 percent of the fees we collect are remitted, in arrears, on a quarterly basis. Based on our experience, 25 percent is a reasonable reserve balance and is consistent with the size of reserve funds established by other agencies within the Department of Agriculture. Further, over the last several years, we attempted to maintain reserve levels with additional funds received due to the rounding of fees. However, as shown in our proposal, this practice has not provided us with a sufficient reserve. We included a reserve building component in the amended fees to ensure that reserve can gradually be rebuilt to an adequate level by 2002. We continue to believe that a fully funded reserve in each category's user fee account is essential to ensure the continuity of service in cases of bad debt, carrier insolvency, and fluctuations in activity volumes.

One commenter questioned what APHIS does with the unearned money it receives in the first quarter of a fiscal year for services provided during the last quarter of the previous fiscal year. The commenter implied that though APHIS cannot use fees it collects after the close of a fiscal year for services provided in that fiscal year, it still has fees collected from after the close of the prior fiscal year to make up for those unavailable collections, and therefore cannot say that it is annually ''short'' one quarter's collections.

The commenter is correct in suggesting that APHIS typically uses collections received after the close of a given fiscal year to pay for services provided during the next fiscal year. However, it does not follow that the AQI program is therefore fully funded as a result. Since both user fees and the volume of users change annually, the costs of providing AQI services in the fourth quarter of one fiscal year can be markedly different from costs of providing services in the fourth quarter of the prior fiscal year. Essentially, APHIS must make up for the difference in fee collections between the fourth quarters of a given year and the prior year with funds from the reserve. For this reason, maintaining an adequate reserve fund is essential to the AQI program.

Advisory Committee

Two commenters suggested that APHIS should establish an advisory committee to assist in determining appropriate changes to the user fee amounts and expenditure of user fee funds. Both commenters referred to U.S. Customs Service's (Customs) and Immigration and Naturalization Service's (INS) advisory committees.

Both Customs and INS are mandated to establish advisory committees. The FACT Act, as amended, does not authorize or direct us to form an advisory committee for AQI user fees. Since the establishment of an advisory committee is outside the scope of this rulemaking proceeding, we are taking no action based on these comments at this time. However, if in the future we determine that an advisory committee is necessary for effective management of the AQI program, we will consider establishing one.

Additional AQI Activities and User Fees

Two commenters suggested that we should consider requiring commercial trucks and railcars entering the United States from Canada to be inspected for plant pests and pay a user fee for AQI services as is required for trucks and railcars entering the United States from Mexico. The commenters stated that due to an increased risk of plant pests being introduced into the United States from prohibited areas via land border ports along the northern U.S. border with Canada, APHIS should propose to eliminate the inspection and user fee exemption for Canadian trucks and railcars in the current user fee regulations. One commenter also stated that APHIS should develop a user fee program for the inspection of cargo containers.

While we acknowledge this increasing risk of pest introduction, the creation of new user fees is outside the scope of this rulemaking. However, we are taking the matter under consideration.

Separation of Costs for Various Categories of AQI Service

One commenter suggested that APHIS may be using fees collected from airlines and air passengers to pay for other AQI services and activities. The commenter implied that a clear link between the fees airlines pay and the

services they receive is not apparent in our proposal. The commenter specifically questioned our using fees collected from airlines to help pay for border blitzes and market surveys.

As stated in previous rulemakings on this subject and in our proposal, each service category is considered separately. Each category must, through user fee receipts, return enough money to APHIS to cover the cost of providing AQI services to that particular category. Costs are assigned directly to a category when the cost is directly related to providing the service. For example, our beagle brigade program only applies to passenger inspections. Therefore, the passenger inspection fees includes the full costs for the beagle brigade program. However, where a cost benefits all categories of service, it is pro-rated among the categories based on historic direct labor staff hours. Border blitzes (inspections) and market surveys, which are ways we test the efficacy and efficiency of our AQI programs, are supported by all of our AQI user fees. As we explained in our proposed rule, we are using data obtained from these inspections and searches to build a database on violations. The database will help us target specific commodities that are smuggled and importers who have a history of smuggling prohibited commodities, while allowing legitimate importers and exporters to move their products through commerce without undue delay. As a result, we will be able to more efficiently serve all those who pay user fees, including airlines.

Another commenter questioned how new equipment and personnel would be allocated among the various categories of AQI service. As stated above and in our proposal, the projected allocation of new personnel to the various categories of service is as follows:

ANTICIPATED AQI PROGRAM HIRES FY 2000–2002, BY CATEGORY OF SERVICE

	Commercial vessels	Commercial trucks	Commercial railcars	Commercial aircraft	International air passenger
New hires	51	39	18	137	216

New and replacement x-ray equipment will be allocated first to expanded airport terminals and to replace outdated machines currently in use. It is possible that a small number of new x-ray machines could be employed at U.S.-Mexico land border ports if we determine that there is sufficient risk to necessitate additional inspection activities and improved technologies there.

New and replacement vehicles will be allocated to AQI operations at airports, land border ports, and sea ports, but again, most of those vehicles will be allocated to airports.

We would like to restate that costs for each category of service are determined separately. A particular category of service does not pay for vehicles that are allocated to other categories of service. We have accounting methods in place to ensure the proper assignment of costs so that each category of service pays only for services provided to that same category of service.

Computer Programming, Y2K Concerns, and Postponement of Effective Date

One commenter suggested that APHIS should delay the implementation of fee changes until at least 6 months after the effective date of the final rule to allow airlines and other ticket issuers time to reprogram their computer systems to account for the revised fees.

The commenter also requested that APHIS either withdraw its proposal to amend existing AQI user fees or delay action for 6 months to provide time for the Agency to respond to a request for additional information that the commenter has submitted under the Freedom of Information Act.

We do not believe that delaying the effective date of this rulemaking is appropriate. If sufficient revenue is not available to fund AQI services, we must reduce service or take money from other programs, either of which would negatively affect our customers.

Changes in Program Collection and Cost Estimates

In our proposed rule, we made certain collection and cost estimates based on the best data available at the time. Actual collections and costs varied somewhat from the estimates, but did not cause a significant difference in the scope of the program or the need to revise the fees as proposed. Our full analysis has been updated to reflect the new data.

The calculations underlying the proposed rule assumed an October 1, 1999, implementation date. Implementing the rule on January 1, 2000, will reduce the anticipated FY 2000 collections by $13,289,865. Also, the FY 2000 Agriculture Appropriation Act made $13,000,000 of FY 2000 collections unavailable instead of the $5,000,000 assumed in the proposed rule. Together, these changes reduce the amount available from FY 2000 collections by $21,288,865. However, changes in program collections and costs for FY 1999 substantially offset this loss and will allow the Agency to proceed with the program enhancements noted in the proposed rule. In FY 1999, the collections actually received totaled $171,904,404 instead of the $159,727,857 assumed in the proposed rule. Also, FY 1999 program costs totaled $152,232,527 instead of the $158,457,857 assumed in the proposed rule. Together, these changes added $18,401,877 to the available reserve, which is available to recover the cost of fees that we could not collect from October 1, 1999 to December 31, 1999.

We now anticipate FY 2000 program costs will total $194,607,291 instead of the $199,965,458 assumed in the proposed rule. The hiring of 315 new inspectors will begin slightly later in the fiscal year than assumed in the proposed rule.

Therefore, for the reasons given in the proposed rule and in this document, we are adopting the proposed rule as a final rule, with the change discussed in this document.

Executive Order 12866 and Regulatory Flexibility Act

This rule has been reviewed under Executive Order 12866. The rule has been determined to be significant for the purposes of Executive Order 12866 and, therefore, has been reviewed by the Office of Management and Budget.

The economic analysis prepared for this rule provides a cost-benefit analysis as required by Executive Order 12866 and an analysis of economic effects on small entities as required by the Regulatory Flexibility Act. The analysis is summarized below. Copies of the full analysis are available by contacting Ms. Donna Ford at the address listed under **FOR FURTHER INFORMATION CONTACT.**

Introduction

APHIS is revising existing agricultural quarantine and inspection (AQI) user fees to recover additional and unanticipated program costs and to rebuild the AQI reserve. The AQI user fee revisions will become effective

January 1, 2000, and will be in effect through FY 2002.

International air passengers, commercial aircraft, commercial vessels, commercial trucks, and commercial railroad cars arriving at ports in the customs territory of the United States will be affected by the increase in AQI user fees.

The FACT Act, as amended, provides that APHIS may prescribe and collect fees to cover the cost of providing quarantine and inspection services in connection with the arrival of international airline passengers, commercial aircraft, commercial vessels, commercial trucks, and commercial railroad cars at ports in the customs territory of the United States. The FACT Act further states that the fees should be sufficient to cover the cost of administering the program and sufficient to maintain a reasonable balance (or reserve) in the AQI User Fee Account.

Need for Regulation

The purpose of agricultural quarantine inspections at U.S. ports of entry is to prevent international travelers and conveyances from introducing harmful plant and animal pests that could damage U.S. agriculture and cause substantial economic losses to domestic producers, consumers, exporters, and to a range of allied agricultural industries. In the case of AQI user fees, those international travelers or conveyances who may carry agricultural pests or diseases from abroad are required to pay for AQI program activities.

Generating revenues to operate public programs by charging users is widely practiced by Federal, State, and local government agencies and is based on the premise that the beneficiaries or users of a public system, and not the public at large, should pay for its operation. User fees can be an equitable way of matching program costs to program users or beneficiaries.

Composition of Proposed Fees

Computation of AQI user fees is based on direct program delivery costs, program support costs, Agency-level support costs, anticipated user fee administrative costs, and reserve fund costs.

Direct Program Costs

Direct program costs include, but are not limited to: Salary and benefits for inspectors, canine officers, supervisory and clerical staff, uniform allowances, local travel expenses, and specialized equipment purchases.

Program Support Costs

Program support costs include all expenditures necessary to maintain regional and headquarters support staffs and offices, including APHIS program staff, detection methods development, plant risk assessments, and automatic data processing (ADP) support.

Agency-level Costs

In addition to salary and benefit costs, Agency-level support costs include, but are not limited to: Recruitment and development, legislative and public affairs, regulatory enforcement, communications, postage, budget and accounting services, and the cost for USDA's National Finance Center to provide payroll, purchasing, and other related financial services.

Administrative Costs

The FACT Act, as amended, allows the Agency to recover administrative costs that the Agency incurs as a direct result of developing, collecting, and monitoring AQI user fees.

The Reserve Fund

The FACT Act allows for a reasonable balance in the AQI User Fee Account. The reserve fund serves several purposes. The reserve fund ensures that the Agency has access, through the AQI User Fee Account, to funds for normal operating expenses. Second, the reserve fund ensures that the Agency has sufficient operating funds in cases of bad debt, carrier insolvency, or fluctuations in activity volumes. Further, in the July 1997 final rule, we explained that it is also necessary to maintain a reasonable reserve balance in the AQI account in order to account for fees earned for providing AQI services in a given fiscal year that were not received until after that fiscal year ended.

Regulatory Flexibility Analysis

The effects of increased fees on small entities in each of the affected industries are discussed separately below. The fee changes will also affect international airline passengers arriving at ports in the customs territory of the United States; however, passengers are not included in this analysis because the Regulatory Flexibility Act does not cover individuals.

Commercial Vessels

We are amending the scheduled user fees for inspecting commercial vessels by increasing the fees by $3.75 in FY 2000, by $3.25 in FY 2001, and by $0.25 in FY 2002. APHIS inspects vessels of 100 net tons or more arriving from all foreign ports, except Canada. Typically, APHIS inspects (and charges) dry cargo vessels operating between the United States and foreign ports. At the beginning of 1996 there were 192 U.S. dry cargo vessels.

Bureau of the Census data compiled by the Small Business Administration (SBA) in 1995 show that the affected industry, U.S. commercial vessels engaged in deep sea foreign transportation of freight, was composed mostly of small firms (less than 500 employees, according to the SBA definition). In 1995, there were 125 firms engaging in deep sea transportation of freight and 111 of them, or 89 percent of the affected industry, employed less than 500 employees. Also in 1995, the average or typical small U.S. firm engaged in deep sea transportation of freight had roughly 31 employees, a payroll of less than $1.6 million, and annual receipts of $28 million. Data on the number of dry cargo vessels per firm or firms exclusively operating dry cargo vessels are not available.

Anecdotal information suggests that many of the companies that are subject to AQI inspections are not U.S. firms. Further, it is unclear how many of the 125 U.S. firms will actually be affected by the increase in AQI user fees and how many of the affected firms are small entities. We do know that total daily operating costs for dry cargo vessels idle in port average between $23,600 and $26,800. The user fee increases of $3.75 in FY 2000, $3.25 in FY 2001, and $0.25 in FY 2002 are very insignificant fractions of daily operating costs, suggesting that the fee revision will not have a significant economic effect on small firms operating vessels.

Commercial Trucks

APHIS inspects trucks entering the United States from Mexico. It is unclear how many of these trucks entering the United States from Mexico are owned and operated by U.S. firms. According to a recent General Accounting Office report, roughly 11,000 trucks cross the border each week day (a total of 3,113,091 in FY 1996) from Mexico into the United States. The bulk (93 percent) of northbound truck traffic comes through seven major customs ports: Otay Mesa, California; Calexico, California; Nogales, Arizona; El Paso, Texas; Laredo, Texas; McAllen, Texas; and Brownsville, Texas. Many of these trucks are owned and operated by Mexican firms. At present, trucks from Mexico are limited to commercial zones along the border and many make multiple daily crossings. Mexican brokers tend to control much of the truck traffic at some border locations.

Reliable data on future traffic patterns are not available.

It is unclear how many U.S. trucking firms will be affected by the increase in AQI user fees. Anecdotal evidence from APHIS employees indicates that many of the AQI truck decals, which are good for multiple inspections, are being purchased by U.S. trucking firms operating in Texas, California, and Arizona. Bureau of the Census data for 1995 show that the overwhelming majority of trucking firms in these States would be considered small firms by SBA standards (less than $18.5 million in receipts annually). SBA data also show that the typical small trucking firm in one of these border States had 10 employees and earned a little less than $1 million in receipts annually.

If we assume that any small U.S. trucking firm that regularly transports freight from Mexico would purchase an APHIS truck decal, which is good for an unlimited number of entries during the calendar year, the increase in user fees could cost a small firm, at most, an additional $5 per truck or an estimated $55 per firm in FY 2000; and $10 per truck or an estimated $110 per firm in FY 2001 and FY 2002. This estimate is based on the assumption that a small firm owns a maximum of 11 trucks. There are no official statistics on the fleet size of small trucking firms either for selected border States or for the United States as a whole. This assumption is based on private sector trucking industry data on 256,223 U.S. trucking firms representing a combined fleet of over 2.3 million vehicles. These data show that 91 percent of firms own 11 or fewer trucks.

SBA data show that the typical small trucking firm in Arizona, California, or Texas has annual receipts of $932,000. We, therefore, believe that the increase in cost, as explained above ($110 for the average small firm), will not result in a significant new burden on small commercial trucking firms.

Loaded Commercial Railroad Cars

There are four U.S. railroad companies currently transporting goods across the U.S.-Mexico border. Two of these railroad companies meet the SBA criteria for small entities (fewer than 1,500 employees). As of 1991, the smaller railroad companies transported between 960 and 2,000 loaded railcars into the United States from Mexico annually. Data on operating expenses and profit margins for these companies are not available; but user fees will not increase in FY 2000 and FY 2002 and will only increase by $0.25 in FY 2001, suggesting that there will not be a significant economic effect on these two small U.S. railroad companies.

Commercial Airlines

We are amending the scheduled user fees for inspecting commercial aircraft by increasing the fees by $3.75 in FY 2000, $3.50 in FY 2001, and $3.00 in FY 2002. International scheduled and unscheduled (chartered) air passenger, air cargo, and air courier carriers arriving at U.S. customs ports are subject to AQI inspections. Bureau of the Census data compiled by the SBA show that there were a total of 6,107 firms in the U.S. air transportation industry in 1995 and that more than 5,893 (or more than 96.5 percent) would have met the SBA criteria for small entity (employing fewer than 1,500 employees). The typical small firm in the air transportation industry had 15 employees, an annual payroll of $398,000, and estimated annual receipts of $2.1 million.

APHIS regulations affect international flights, many of which are operated by foreign-owned firms. Those U.S. air transport firms that do not operate international flights are not subject to the rule. Agency records show that, in 1995, only 123 of the 6,107 firms in the air transportation industry were subject to agricultural quarantine inspections because they operated international flights. This data suggest that the increased user fees will not affect a substantial number of small air transportation companies. Even if all 123 U.S. airline firms were small entities (which they are not), the fee revision would be applicable to only 2 percent of small firms in the industry. Using information on the number of firms inspected, the number of projected inspections, and the assumption that firms subject to inspection are distributed by size in a fashion consistent with the industry as a whole, we can develop very rough estimates of effect on small firms.

Each of the 123 U.S. companies would have had an airplane inspected between 1,600 and 1,700 times per year if inspections were prorated equally between large and small firms. In practice, small firms with fewer aircraft would probably have substantially fewer annual inspections, so we are overestimating the effect of fee revisions on small firms. Given the assumptions above, the increased fees listed above will likely translate into additional costs per firm of between $5,000 and $6,000 per year, which are less than three-tenths of one percent of estimated annual receipts for the average small air transportation firm.

Given the data, assumptions, and calculations above, it is reasonable to conclude that fee revisions will not have a significant economic effect on a substantial number of small air transportation firms.

Other Costs and Benefits

Additional reporting costs to private airlines associated with revising user fees are likely to be very small because mechanisms are already in place for collecting fees. There should be no additional recordkeeping costs for ticketing agents and tour operators who are not involved in remitting fees and are not expected to remit fees in the future. Further, there will be no additional reporting burdens on vessel, aircraft, railcar, and truck operators as a result of revisions to user fees.

The benefit of user fees is the shift in the payment of services from taxpayers as a whole to those persons who are receiving the government services. While taxes may not change by the same amount as the change in user fee collections, there is a related shift in appropriations, which allows tax dollars to be applied to other programs that benefit the public in general.

The administrative cost involved in obtaining these savings will be minimal. APHIS already has a user fee program and a mechanism for collecting user fees in place, and since this rule simply updates existing user fees, increases in administrative costs will be small. Because the savings are sufficiently large and the administrative costs will be small, it is likely that the net gain in reducing the burden on taxpayers as a whole will outweigh the cost of administering the revisions of the user fees.

Under these circumstances, the Administrator of the Animal and Plant Health Inspection Service has determined that this action will not have a significant economic impact on a substantial number of small entities.

Executive Order 12372

This program/activity is listed in the Catalog of Federal Domestic Assistance under No. 10.025 and is subject to Executive Order 12372, which requires intergovernmental consultation with State and local officials. (See 7 CFR part 3015, subpart V.)

Executive Order 12988

This final rule has been reviewed under Executive Order 12988, Civil Justice Reform. This rule: (1) Preempts all State and local laws and regulations that are inconsistent with this rule; (2) has no retroactive effect; and (3) does not require administrative proceedings

before parties may file suit in court challenging this rule.

Paperwork Reduction Act

This final rule contains no new information collection or recordkeeping requirements under the Paperwork Reduction Act of 1995 (44 U.S.C. 3501 *et seq.*).

List of Subjects in 7 CFR Part 354

Exports, Government employees, Imports, Plant diseases and pests, Quarantine, Reporting and recordkeeping requirements, Travel and transportation expenses.

Accordingly, 7 CFR part 354 is amended as follows:

PART 354—OVERTIME SERVICES RELATING TO IMPORTS AND EXPORTS; AND USER FEES

1. The authority citation for part 354 continues to read as follows:

Authority: 7 U.S.C. 2260; 21 U.S.C. 136 and 136a; 49 U.S.C. 1741; 7 CFR 2.22, 2.80, and 371.2(c).

2. Section 354.3 is amended by revising the tables in paragraphs (b)(1), (c)(1), (d)(1), (e)(1), and (f)(1) to read as follows:

§ 354.3 User fees for certain international services.

* * * * *

(b) * * *

(1) * * *

Effective dates	Amount
January 1, 2000 through September 30, 2000	465.50
October 1, 2000 through September 30, 2001	474.50
October 1, 2001 through September 30, 2002	480.50

* * * * *

(c) * * *

(1) * * *

Effective dates	Amount
January 1, 2000 through September 30, 2000	4.25
October 1, 2000 through September 30, 2001	4.50
October 1, 2001 through September 30, 2002	4.75

* * * * *

(d) * * *

(1) * * *

Effective dates	Amount
January 1, 2000 through September 30, 2000	6.75
October 1, 2000 through September 30, 2001	7.00
October 1, 2001 through September 30, 2002	7.00

* * * * *

(e) * * *

(1) * * *

Effective dates	Amount
January 1, 2000 through September 30, 2000	64.00
October 1, 2000 through September 30, 2001	64.75
October 1, 2001 through September 30, 2002	65.25

* * * * *

(f) * * *

(1) * * *

Effective dates [1]	Amount
January 1, 2000 through September 30, 2000	3.00
October 1, 2000 through September 30, 2001	3.00
October 1, 2001 through September 30, 2002	3.10

[1] Persons who issue international airline tickets or travel documents are responsible for collecting the APHIS international airline passenger user fee from ticket purchasers. Issuers must collect the fee applicable at the time tickets are sold. In the event that ticket sellers do not collect the APHIS user fee when tickets are sold, the air carrier must collect the user fee from the passenger upon departure. Carriers must collect the fee applicable at the time of departure from the traveler.

* * * * *

3. In § 354.3, paragraph (c)(3)(i) would be amended by removing the words ‘‘,*except*, that through September 30, 1997, the amount to be paid is $40.00’’.

Done in Washington, DC, this 9th day of November 1999.

Bobby R. Acord,

Acting Administrator, Animal and Plant Health Inspection Service.

[FR Doc. 99–29868 Filed 11–15–99; 8:45 am]

BILLING CODE 3410–34–P

FEDERAL DEPOSIT INSURANCE CORPORATION

12 CFR Parts 308 and 330

RIN 3064–AC30

Technical Amendments to FDIC Regulations Relating to Rules of Practice and Procedure and Deposit Insurance Coverage

AGENCY: Federal Deposit Insurance Corporation (FDIC).

ACTION: Final rule.

SUMMARY: The FDIC is amending various sections of its Local Rules of Practice and Procedure (Local Rules) governing administrative enforcement proceedings. The amendments are generally technical in nature, and are necessary to ensure that the rules are consistent with statutory provisions and procedural changes that have occurred since the rules were first adopted. The FDIC also is making a conforming, technical amendment that was inadvertently omitted from recent revisions to the FDIC's deposit insurance regulations.

EFFECTIVE DATE: November 16, 1999.

FOR FURTHER INFORMATION CONTACT: On the Part 308 amendments, Andrea Winkler, Counsel, Legal Division (202) 898–3727; on the Part 330 amendment, Joseph A. DiNuzzo, Counsel, Legal Division (202) 898–7349, Federal Deposit Insurance Corporation, 550 17th Street, N.W., Washington, D.C. 20429.

SUPPLEMENTARY INFORMATION:

I. Part 308 Amendments

A. Background

On August 9, 1991, the federal banking agencies [1] published one set of final uniform rules and procedures (Uniform Rules) for formal administrative enforcement hearings required to be conducted on the record under the Administrative Procedure Act (APA)(5 U.S.C. 554–557).[2] In addition, each agency published separate ‘‘Local Rules’’ applicable to that agency to supplement the Uniform Rules in order to address some or all of the following: formal enforcement actions not within the scope of the Uniform Rules, informal actions which are not subject to the APA, and procedures to supplement or facilitate the processing of administrative enforcement actions within the FDIC and the other agencies.

B. Summary of the Amendments

The FDIC is amending various subparts of its Local Rules as described below.

Authority. The section listing the authority for the Uniform Rules and Local Rules has been amended to incorporate references to the cross guaranty provisions of the Federal Deposit Insurance Act (FDIA) (12 U.S.C. 1815(e)), which were initially omitted by technical oversight, and to the prompt corrective action and safety and

[1] The agencies were the FDIC, Office of the Comptroller of the Currency, Board of Governors of the Federal Reserve System, Office of Thrift Supervision and National Credit Union Administration.

[2] 56 FR 37975 (1991) (amended at 61 FR 20347 (1996)). The uniform rules, which are contained in subpart A of part 308 ((12 CFR part 308, subpart A), are intended to standardize procedures for actions common to at least four of the five Agencies.

soundness provisions of the FDIA (12 U.S.C. 1831o and 1831p–1), which were enacted after the Local Rules were first promulgated.

Subpart B—General Rules of Procedure

Section 308.101. As presently written, § 308.101, ''Scope of Local Rules,'' makes clear that the rules contained in subpart A, ''Uniform Rules,'' and subpart B of the Local Rules, ''General Rules of Procedure,'' do not apply to subparts D through P of part 308 unless specifically provided. Since 1991, three additional subparts have been added—subpart Q, which pertains to prompt corrective action, was added in 1992 (57 FR 48426); subpart R, which pertains to safety and soundness compliance plans, was added in 1995 (60 FR 35684); and subpart S, which pertains to bank clearing agencies, was added in 1996 (61 FR 48403). Therefore, a technical amendment is made to include a reference to those subparts to indicate that subparts A and B do not apply to subparts D through S of part 308 unless specifically provided.

Section 308.102. Section 308.102 sets forth the authority of the Board of Directors and Executive Secretary. Since the enactment of the Local Rules, certain authority to act upon routine and procedural matters in enforcement cases has been delegated by Resolution of the Board of Directors to the Executive Secretary, Deputy Executive Secretary and or the Assistant Executive Secretary (Operations). In exercising such delegated authority, those persons can only act upon the advice and recommendations of the Deputy General Counsel for Litigation, or, in his absence, the Assistant General Counsel, Trial Litigation Section.

The delegation resulted from the fact that there are a variety of procedural matters that arise in enforcement cases that are of a technical legal nature, subject to well-settled case law and that do not involve important policy issues. Thus, the authority to issue rulings in the context of sections 7(j), 8, 18(j), 19, 32 and 38 of the FDIA (12 U.S.C. 1817(j), 1818, 1828(j), 1829, 1831i and 1831o concerning denials of requests for private hearing, interlocutory appeals; stays pending judicial review; reopenings of the record and/or remands of the record to the administrative law judge; supplementation of the evidence in the record; all remands from the courts of appeals not involving substantive issues; extensions of stays of orders terminating deposit insurance; and all matters, including final decisions, in proceedings under section 8(g) of the FDIA (12 U.S.C. 1818(g)) have been delegated.

The authority to act on such matters was delegated in order to allow the Board to concentrate its limited available time upon important policy matters. A delegation, which initially was a more limited delegation concerning interlocutory and procedural matters, first became effective in 1992, and was later expanded in 1997, because it worked well in allowing the FDIC to operate more efficiently. Therefore, § 308.102 has been revised to reflect the current delegations and practice.

Subpart C—Rules of Practice Before the FDIC and Standards of Conduct

Section 308.109. This section, which pertains to suspension and disbarment, authorizes summary suspension from practice in a particular FDIC matter based upon contemptuous conduct in that matter. Section 308.109(b) of the regulations provides for mandatory and automatic suspension and disbarment of attorneys under certain circumstances and gives the Board of Directors discretion to suspend and disbar under other circumstances. The current rule is somewhat confusing insofar as it provides simply that an application to be reinstated may be filed at any time not less than one year after the applicant's most recent application. The FDIC intends that once suspended or disbarred from practice before the FDIC by the Board, a counsel may not make an application for reinstatement for at least one year, and thereafter, may make a new request for reinstatement no sooner than one year after the counsel's most recent reinstatement application. A technical, clarifying amendment reflecting this intent is made.

An applicant for reinstatement under either the discretionary or mandatory suspension and disbarment provisions may, in the Board's sole discretion, be afforded a hearing. Section 308.109(c) provides that hearings conducted pursuant to this section shall be handled in the same manner as other hearings under the Uniform Rules, except that in proceedings to terminate an existing FDIC suspension or disbarment order, the person seeking the termination shall bear the burden of going forward with the application and with proof, and the Board of Directors may limit any such hearings to written submissions. A clarifying amendment is proposed to make explicit that the applicant has the burden of proof with regard to the grounds supporting the application.

Subpart G—Rules and Procedures Applicable to Proceedings Relating to Cease-and-Desist Orders

Section 308.127. This section defines the scope of the Uniform and Local Rules as they pertain to cease-and-desist proceedings under section 8(b) of the FDIA (12 U.S.C. 1818(b)). Paragraph (a) contains a statement regarding the applicability of those rules to temporary cease-and-desist proceedings under section 8(c) of the FDIA (12 U.S.C. 1818(c)). Insofar as § 308.131 pertains specifically to temporary cease-and-desist orders, and paragraph (c) of that section indicates that the Uniform Rules and subpart B of the Local Rules do not apply to the issuance of temporary cease-and-desist orders pursuant to section 8(c) of the FDIA, that same language in § 308.127(a) is redundant, and a technical amendment deleting that phrase in § 308.127(a) has been made.

Subpart H—Rules and Procedures Applicable to Proceedings Relating to Assessment and Collection of Civil Money Penalties for Violation of Cease-and-Desist Orders and of Certain Federal Statutes, Including Call Report Penalties

Section 308.132. The FDIC is making a technical correction to § 308.132(c)(3) which inadvertently refers to the Debt Collection Act rather than the appropriate title of that law which is the Debt Collection Improvement Act.

Subpart K—Procedures Applicable to Investigations Pursuant to Section 10(c) of the FDIA

Section 308.145. A technical amendment is made to correct the citation to § 303.9, which is now codified at § 303.272.

Section 308.148. A technical amendment is made to paragraph (b) to correct the citation to § 308.6, which is incorrectly cited as § 308.06. A similar amendment is made to paragraph (d) to correct the citation to § 308.8, which is incorrectly cited as § 308.08.

Subpart L—Procedures and Standards Applicable to a Notice of Change in Senior Executive Officer or Director Pursuant to Section 32 of the FDIA

Section 308.151. Subpart L governs proceedings for the disapproval of candidates for senior executive officer and director. Section 2208 of the Economic Growth and Regulatory Paperwork Reduction Act of 1996 (Pub. L. 104–208) amended the circumstances that require an insured state nonmember bank to notify the FDIC of a proposed addition or employment of a director or senior executive officer. After 1996,

there is no longer a requirement that a bank which has been chartered less than two years or which has undergone a change in control within the preceding two years submit such a notice. Instead, the law now requires that a bank must file a prior notice where (i) it is not in compliance with all minimum capital requirements applicable to it as determined by the FDIC on the basis of such institution's most recent report of condition or report of examination or inspection; (ii) the bank is in a troubled condition; or (iii) the FDIC determines, in connection with the review of a plan required under section 38 of the FDIA (12 U.S.C. 1831o) or otherwise, that such prior notice is appropriate. Section 308.151(a) has been revised to incorporate these statutory changes.

Sections 308.152, 308.153 and 308.155. Technical amendments to correct grammatical errors or incorrect citations to other parts of the regulations are made.

Subpart M—Procedures and Standards Applicable to an Application Pursuant to Section 19 of the FDIA

Subpart M governs procedures for FDIC approval of applications filed pursuant to section 19 of the FDIA (12 U.S.C. 1829) by persons convicted of certain crimes who wish to participate in banking. This subpart has been revised in order to comply with the changes to section 19 made by the Housing and Community Development Act (Pub. L. 102–550) which added convictions for money laundering to the list of covered crimes for which an application must be filed, and to make this subpart consistent with current policy and practice, especially in light of the FDIC's Statement of Policy on Section 19 of the FDI Act which became effective December 1, 1998 (63 FR 66177 (1998)).

Sections 308.156 and 308.157. These sections pertain to the scope of the regulation and relevant considerations for granting applications. Section 308.156 has been amended to reflect that under current policy and consistent with the revised regulations, an insured depository institution may file an application on behalf of an individual, or in certain cases, an individual may directly file an application. Both sections have been amended to include convictions for money laundering consistent with the statutory language of section 19.

Section 308.158. Section 308.158(a) of subpart M directs that applications be filed with the appropriate FDIC regional office, but it is silent as to who must file the application. Longstanding FDIC policy has been that an application must be filed by the insured depository institution at which the convicted individual intends to be employed or otherwise participate, or which the individual intends to own or control. Two recent policy changes affect filing requirements. The FDIC has adopted an approach of granting blanket approval, and not requiring an application, in cases in which an individual meets the criteria of the de minimis exception set forth in the FDIC's Statement of Policy on Section 19 of the FDI Act (63 FR 66177 (1998)). In addition, the FDIC will consider waivers of the institution filing requirement, on a case-by-case basis, in instances in which an individual can show substantial good cause why an application should be granted.

Therefore, paragraph (a) has been amended to clarify that an institution must file the application unless a waiver is granted for substantial good cause shown which allows the individual to file, or unless no application is required because the de minimis exception applies. Paragraph (b) has been amended to clarify that the prohibition pursuant to section 19 shall continue until the individual has been reinstated by the Board of Directors or its designee for good cause shown. In addition, a new paragraph (c) has been added to reflect the current policy and practice regarding the filing requirements and delegations of authority for waiver applications.

Section 308.160. This section pertains to the hearing procedure in section 19 cases. A technical correction has been made to change the reference to 308.06 to 308.6.

Subpart N—Rules and Procedures Applicable to Proceedings Relating to Suspension, Removal, and Prohibition Where a Felony Is Charged

Subpart N governs proceedings for suspension, removal, and prohibition pursuant to section 8(g) of the FDIA (12 U.S.C. 1818(g)) where a felony is charged. The changes in subpart N were made for purposes of clarity and to reflect the amendments to section 8(g) made by the Housing and Community Development Act of 1992 (1992 Amendments)(Pub. L. 102–550).

Section 308.161. This section sets forth the scope of the rules as they apply to suspension, removal and prohibition proceedings. Where an institution-affiliated party is charged in any information, indictment, or complaint with the commission of, or participation in, a crime involving dishonesty or breach of trust punishable by imprisonment exceeding one year under state or federal law, section 8(g) of the FDIA allows the FDIC to suspend that individual or to prohibit that party, absent prior written FDIC consent, from further participation in the conduct of the affairs of the depository institution, if his or her continued service or participation poses a threat to the interests of the depository institution's depositors or threatens to impair public confidence in the depository institution. The 1992 Amendments added, as a cause justifying suspension, an individual being charged with the commission of a criminal violation involving money laundering (section 1956, 1957, or 1960 of Title 18) or violations of the Bank Secrecy Act (section 5322 or 5324 of Title 31).

In addition, where a conviction or an agreement to enter a pre-trial diversion or other similar program has been entered against an institution-affiliated party in connection with a crime involving dishonesty or breach of trust punishable by imprisonment exceeding one year under state or federal law, and the conviction is not subject to further appellate review, the FDIC may remove or prohibit the party, absent prior FDIC consent, from further participation in the conduct of the affairs of the depository institution, if continued service or participation by such party poses a threat to the interests of the depository institution's depositors or threatens to impair public confidence in the depository institution. The 1992 Amendments added as a mandatory cause of removal or prohibition, the entry of a judgment of conviction or an agreement to enter a pre-trial diversion or other similar program against such party in connection with a criminal violation of section 1956, 1957, or 1960 of Title 18 or section 5322 or 5324 of Title 31. Amendments to this section reflect these statutory changes.

Section 308.162. This section sets forth relevant considerations for the issuance of a suspension, removal or prohibition. Consistent with the statutory changes described above, whether the alleged offense is a criminal violation of section 1956, 1957, or 1960 of Title 18 or section 5322 or 5324 of Title 31 has been added as a factor.

Section 308.163. This section pertains to orders of removal or prohibition. Amendments have been proposed to incorporate the 1992 Amendments which direct that an order be entered where a final judgment of conviction is entered against the individual for a criminal violation of section 1956, 1957, or 1960 of Title 18 or section 5322 or 5324 of Title 31.

Section 308.164. A technical amendment has been made to correct the citation to § 308.6 of the Uniform Rules.

Subpart P—Rules and Procedures Relating to the Recovery of Attorney Fees and Other Expenses

Subpart P governs proceedings relating to the recovery of attorney fees and other expenses under the Equal Access to Justice Act (EAJA) (5 U.S.C. 504). The revisions to this subpart are made to conform to statutory changes made by the Small Business Regulatory Enforcement Fairness Act (1996 Amendments) (Pub. L. 104–121, 110 Stat. 857 (1996)). The EAJA allows individuals and small businesses who have been sued by the government to recover their attorneys fees and costs if they prevailed in the suit, unless the agency's position was substantially justified or special circumstances make an award unjust. The 1996 Amendments added a new grounds for recovery in an adversary adjudication arising from an agency action to enforce a party's compliance with a statutory or regulatory requirement where the demand by the agency is substantially in excess of the decision of the adjudicative officer and is unreasonable when compared with such decision under the facts or circumstances of the case. A party may seek such an award unless the party has committed a willful violation of law or otherwise acted in bad faith, or special circumstances make an award unjust. Fees and expenses awarded under the foregoing grounds shall be paid only as a consequence of appropriations paid in advance. In addition, the 1996 Amendments added ''small entities'' to the applicants that are eligible for an award pursuant to the new provisions and increased the maximum amount of attorneys fees for all EAJA actions from $75.00 per hour to $125.00 per hour.

Section 308.170. This section pertains to the filing, content, and service of documents. Proposed amendments have been made to clarify filing requirements and to include in this section a reference to applications concerning excessive demands.

Section 308.171. This section pertains to responses to applications. It has been revised to incorporate references to answers and replies in applications involving excessive demands.

Section 308.172. This section addresses the eligibility of applicants. It has been amended to add a small entity as defined in 5 U.S.C. 601 as an eligible applicant for awards based upon excessive demands.

Section 308.174. This section sets the standards for awards. It has been amended to reference applications based upon excessive awards.

Section 308.175. This section addresses the measure of awards and has been amended to change references to the maximum amount of attorneys fees that may be awarded in an EAJA claim from $75.00 per hour to $125.00 per hour, and to include a statement incorporating the 1996 Amendments that fees and expenses related to defending against an excessive demand shall be paid only as a consequence of appropriations paid in advance.

Section 308.176. This section contains guidelines for the contents of applications for awards. It has been amended to include requirements relevant to an application concerning an excessive award.

Section 308.179. This section pertains to settlement. It has been amended to indicate that while a statement of intent to negotiate a settlement should be filed with the Executive Secretary, a copy of a statement should also be filed with the administrative law judge. This is to ensure that, in cases in which an answer has not yet been filed, the administrative law judge will be aware of potential settlement. In addition, the time within which an answer must be filed pending settlement negotiations has been extended from 20 to 30 days. This time frame better reflects the timetable within which settlements are able to be approved.

II. Part 330 Amendment

Effective April 1, 1999, the FDIC revised its deposit insurance rules on the coverage of joint accounts and payable-on-death accounts (64 FR 15653, April 1, 1999). In amending the joint account provisions, however, the FDIC failed to revise § 330.9(a) of the FDIC's regulations (12 CFR 330.9(a)) to indicate that joint accounts comprised of community property funds would continue to be treated as any other type of qualifying joint account. The final rule makes this technical, conforming amendment to § 330.9(a).

III. Exemption From Public Notice and Comment

Chapter 6 of Title 5 of the United States Code which pertains to ''The Analysis of Regulatory Functions'' does not apply to the final rule. The revisions to part 308 and part 330 do not constitute a ''rule'' for which the FDIC is required to publish a general notice of proposed rulemaking under section 553(b) of Title 5 of the United States Code. This is because the final rule contains only clarifications and technical changes intended to bring the agency's rules of practice and procedure and deposit insurance rules into conformity with statutory changes or current agency practices and procedures. Thus, the FDIC has determined for good cause that public notice and comment are unnecessary and that the rule should be published in final form.

IV. Regulatory Flexibility Analysis

The Regulatory Flexibility Act (5 U.S.C. 601–612) requires an agency to publish an initial regulatory flexibility analysis, except to the extent provided in 5 U.S.C. 605(b), whenever the agency is required to publish a general notice of proposed rulemaking for a proposed rule. For the reasons discussed above, the FDIC is publishing this rule as a final rule, for which no publication of a general notice of proposed rulemaking is necessary. No regulatory flexibility analysis is required.

V. Small Business Regulatory Enforcement Fairness Act

The Office of Management and Budget has determined that the final rule is not a ''major rule'' within the meaning of the relevant sections of the Small Business Regulatory Enforcement Fairness Act of 1996 (SBREFA) (5 U.S.C. 801 *et seq.*). As required by SBREFA, the FDIC will file the appropriate reports with Congress and the General Accounting Office so that the final rule may be reviewed.

VI. Paperwork Reduction Act

No collections of information pursuant to the Paperwork Reduction Act of 1980 (44 U.S.C. 3501 *et seq.*) are contained in this rule. Consequently, no information has been submitted to the Office of Management and Budget for review.

VII. Assessment of Impact of Federal Regulation on Families

The FDIC has determined that this regulation will not affect family well-being within the meaning of section 654 of the Treasury Department Appropriations Act of 1999, enacted as part of the Omnibus Consolidated and Emergency Appropriations Act of 1999 (Pub. L. 105–277, 112 Stat. 2681).

VIII. Effective Date

The APA (5 U.S.C. 551 *et seq.*) provides that regulations shall become effective thirty (30) days after their publication in the **Federal Register** (5 U.S.C. 553). One exception to this requirement is for a finding of ''good cause''(*Id.* at 553(d)). For the final rule, the Board finds ''good cause'' to make the amendments effective immediately upon publication in the **Federal Register** because the amendments are

technical and conforming to pre-existing statutory and regulatory requirements.

IX. Authority for the Regulation

This regulation is authorized by the FDIC's general rulemaking authority and pursuant to its fundamental responsibilities to ensure the safety and soundness of insured depository institutions. Specifically, 12 U.S.C. 1819(a) Tenth provides the FDIC with general authority to issue such rules and regulations as it deems necessary to carry out the statutory mandates of the Federal Deposit Insurance Act and other laws that the FDIC is charged with administering or enforcing.

List of Subjects

12 CFR Part 308

Administrative practice and procedure, Banks, banking, Claims, Crime, Equal access to justice, Lawyers, Penalties, State nonmember banks.

12 CFR Part 330

Bank deposit insurance, Banks, banking, Reporting and recordkeeping requirements, Savings and loan associations, Trusts and trustees.

Adoption of Technical Amendments

For the reasons set forth in the preamble, the FDIC hereby amends chapter III of title 12 of the Code of Federal Regulations as set forth below:

PART 308—RULES OF PRACTICE AND PROCEDURE

1. The authority citation for part 308 is revised to read as follows:

Authority: 5 U.S.C. 504, 554–557; 12 U.S.C. 93(b), 164, 505, 1815(e), 1817, 1818, 1820, 1828, 1829, 1829b, 1831i, 1831o, 1831p-1, 1832(c), 1884(b), 1972, 3102, 3108(a), 3349, 3909, 4717; 15 U.S.C. 78 (h) and (i), 78o–4(c), 78o–5, 78q–1, 78s 78u, 78u–2, 78u–3 and 78w; 28 U.S.C. 2461 note; 31 U.S.C. 330, 5321; 42 U.S.C. 4012a; sec. 31001(s), Pub. L. 104–134, 110 Stat. 1321–358.

2. In § 308.101, paragraph (b) is revised to read as follows:

§ 308.101 Scope of Local Rules.

* * * * *

(b) Except as otherwise specifically provided, the Uniform Rules and subpart B of the Local Rules shall not apply to subparts D through S of the Local Rules.

* * * * *

3. In § 308.102, paragraph (b) is revised to read as follows:

§ 308.102 Authority of Board of Directors and Executive Secretary.

* * * * *

(b) *The Executive Secretary.* (1) When no administrative law judge has jurisdiction over a proceeding, the Executive Secretary may act in place of, and with the same authority as, an administrative law judge, except that the Executive Secretary may not hear a case on the merits or make a recommended decision on the merits to the Board of Directors.

(2) Pursuant to authority delegated by the Board of Directors, the Executive Secretary, Deputy Executive Secretary or the Assistant Executive Secretary (Operations), upon the advice and recommendation of the Deputy General Counsel for Litigation or, in his absence, the Assistant General Counsel, Trial Litigation Section, may issue rulings in proceedings under sections 7(j), 8, 18(j), 19, 32 and 38 of the FDIA (12 USC 1817(j), 1818, 1828(j), 1829, 1831i and 1831o concerning:

(i) Denials of requests for private hearing;

(ii) Interlocutory appeals;

(iii) Stays pending judicial review;

(iv) Reopenings of the record and/or remands of the record to the ALJ;

(v) Supplementation of the evidence in the record;

(vi) All remands from the courts of appeals not involving substantive issues;

(vii) Extensions of stays of orders terminating deposit insurance; and

(viii) All matters, including final decisions, in proceedings under section 8(g) of the FDIA (12 U.S.C. 1818(g)).

* * * * *

4. In § 308.109, paragraphs (b)(3) and (c) are revised to read as follows:

§ 308.109 Suspension and disbarment.

* * * * *

(b) * * *

(3) A suspension or disbarment under paragraph (b)(1) of this section from practice before the FDIC shall continue until the applicant has been reinstated by the Board of Directors for good cause shown, provided that any person suspended or disbarred under paragraph (b)(1) of this section shall be automatically reinstated by the Executive Secretary, upon appropriate application, if all the grounds for suspension or disbarment under paragraph (b)(1) of this section are subsequently removed by a reversal of the conviction (or the passage of time since the conviction) or termination of the underlying suspension or disbarment. An application for reinstatement on any other grounds by any person suspended or disbarred under paragraph (b)(1) of this section may be filed no sooner than one year after the suspension or disbarment, and thereafter, a new request for reinstatement may be made no sooner than one year after the counsel's most recent reinstatement application. An applicant for reinstatement under this provision may, in the Board of Directors' sole discretion, be afforded a hearing.

(c) *Hearings under this section.* Hearings conducted under this section shall be conducted in substantially the same manner as other hearings under the Uniform Rules, provided that in proceedings to terminate an existing FDIC suspension or disbarment order, the person seeking the termination of the order shall bear the burden of going forward with an application and with the burden of proving the grounds supporting the application, and that the Board of Directors may, in its sole discretion, direct that any proceeding to terminate an existing suspension or disbarment by the FDIC be limited to written submissions.

* * * * *

§ 308.127 [Amended]

6. In § 308.127, paragraph (a) is amended by adding a period after ''12 U.S.C. 1818(b)'', and removing the words ''; provided that the provisions of the Uniform Rules and subpart B of the Local Rules shall not apply to the issuance of temporary cease-and-desist orders pursuant to section 8(c) of the FDIA (12 U.S.C. 1818(c))''.

§ 308.132 [Amended]

7. In § 308.132, the paragraph (c)(3) heading and introductory text are amended by removing the words ''Debt Collection Act'' and adding the words ''Debt Collection Improvement Act''.

§ 308.145 [Amended]

8. The first sentence of § 308.145 is amended by removing '' § 303.9'' and adding in its place ''§ 303.272.''

§ 308.148 [Amended]

9. In § 308.148, paragraph (b) is amended by removing ''§ 308.06'' and adding in its place ''§ 308.6'', and paragraph (d) is amended by removing ''§ 308.08'' and adding in its place ''§ 308.8''.

10. § 308.151 is revised to read as follows:

§ 308.151 Scope.

The rules and procedures set forth in this subpart shall apply to the notice filed by a state nonmember bank pursuant to section 32 of the FDIA (12 U.S.C. 1831i) and § 303.102 of this chapter for the consent of the FDIC to add or replace an individual on the Board of Directors, or to employ any

individual as a senior executive officer, or change the responsibilities of any individual to a position of senior executive officer where:

(a) The bank is not in compliance with all minimum capital requirements applicable to it as determined by the FDIC on the basis of such institution's most recent report of condition or report of examination or inspection;

(b) The bank is in a troubled condition as defined in § 303.101(c) of this chapter; or

(c) The FDIC determines, in connection with the review of a capital restoration plan required under section 38(e)(2) of the FDIA (12 U.S.C. 1831o(e)(2)) or otherwise, that such prior notice is appropriate.

§ 308.152 [Amended]

11. In § 308.152, paragraph (a) is amended by adding the word ''is'' after the word ''notice'', and paragraph (b) is amended by removing the word ''indicated'' and adding in its place the word ''indicates''.

§ 308.153 [Amended]

12. In § 308.153, the section heading is amended by removing ''§ 303.14'' and adding in its place ''§ 303.103(c)''.

§ 308.155 [Amended]

13. In § 308.155, paragraph (c)(2) is amended by removing ''§ 308.06'' and adding in its place ''§ 308.6.''

§ 308.156 [Amended]

14. § 308.156 is amended by removing the words ''and/or an individual'' and adding in their place the words ''and a person'' and by adding the words ''or money laundering'' after the word ''trust''.

§ 308.157 [Amended]

15. In § 308.157, paragraph (a)(1) is amended by adding the words ''or money laundering'' after the word ''trust''.

16. § 308.158 is revised to read as follows:

§ 308.158 Filing papers and effective date.

(a) *Filing with the regional office.* Applications pursuant to section 19 shall be filed by in the appropriate regional office. Unless a waiver has been granted pursuant to paragraph (c) of this section, only an insured depository institution may file an application. Persons meeting the de minimis criteria set forth in the FDIC's Statement of Policy on Section 19 of the FDIA (63 FR 66177 (1998)) need not file an application.

(b) *Effective date.* An application pursuant to section 19 may be made in writing at any time more than one year after the issuance of a decision denying an application pursuant to section 19. The removal and/or prohibition pursuant to section 19 shall continue until the individual has been reinstated by the Board of Directors or its designee for good cause shown.

(c) *Waiver applications.* If an institution does not file an application regarding an individual, the individual may file a request for a waiver of the institution filing requirement for section 19 of the FDIA. Such a waiver application shall be filed with the appropriate regional office and shall set forth substantial good cause why the application should be granted. The Director of the Division of Supervision and, where confirmed in writing by the director, a deputy director or an associate director may grant or deny applications requesting waivers of the institution filing requirement. The authority delegated under this section shall be exercised only upon the concurrent certification of the General Counsel or his designee that the action to be taken is not inconsistent with section 19 of the FDIA.

§ 308.160 [Amended]

17. In § 308.160, paragraph (c)(2) is amended by removing ''§ 308.06'' and adding in its place ''§ 308.6''.

18. § 308.161 is revised to read as follows:

§ 308.161 Scope.

The rules and procedures set forth in this subpart shall apply to the following:

(a) Proceedings to suspend an institution-affiliated party of an insured state nonmember bank, or to prohibit such party from further participation in the conduct of the affairs of the bank, if continued service or participation by such party poses a threat to the interests of the bank's depositors or threatens to impair public confidence in the depository institution, where the individual is charged in any state or federal information, indictment, or complaint, with the commission of, or participation in:

(1) A crime involving dishonesty or breach of trust punishable by imprisonment exceeding one year under state or federal law; or (2) A criminal violation of section 1956, 1957, or 1960 of Title 18 or section 5322 or 5324 of Title 31.

(b) Proceedings to remove from office or to prohibit an institution-affiliated party from further participation in the conduct of the affairs of the bank without the consent of the Board of Directors or its designee where:

(1) A judgment of conviction or an agreement to enter a pre-trial diversion or other similar program has been entered against such party in connection with a crime described in paragraph (a)(1) of this section that is not subject to further appellate review, if continued service or participation by such party poses a threat to the interests of the bank's depositors or threatens to impair public confidence in the depository institution; or

(2) A judgment of conviction or an agreement to enter a pre-trial diversion or other similar program has been entered against such party in connection with a crime described in paragraph (a)(2) of this section.

19. In § 308.162, paragraph (a) is revised to read as follows:

§ 308.162 Relevant considerations.

(a)(1) In proceedings under § 308.161 (a) and (b) for a suspension, removal or prohibition order, the following shall be considered:

(i) Whether the alleged offense is a crime which is punishable by imprisonment for a term exceeding one year under state or federal law and which involves dishonesty or breach of trust; and

(ii) Whether the alleged offense is a criminal violation of section 1956, 1957, or 1960 of Title 18 or section 5322 or 5324 of Title 31; and

(iii) Whether continued service or participation by the institution-affiliated party may pose a threat to the interest of the bank's depositors, or threatens to impair public confidence in the bank.

* * * * *

20. In § 308.163, paragraph (b) is revised to read as follows:

§ 308.163 Notice of suspension, and orders of removal or prohibition.

* * * * *

(b) *Order of removal or prohibition.* (1) The Board of Directors or its designee may issue an order removing or prohibiting from further participation in the conduct of the affairs of the bank an institution-affiliated party, when a final judgment of conviction not subject to further appellate review is entered against the individual for a crime referred to in § 308.161(a)(1) and continued service or participation by such party poses a threat to the interests of the bank's depositors or threatens to impair public confidence in the depository institution.

(2) An order of removal or prohibition shall be entered if a judgment of conviction is entered against the individual for a crime described in § 308.161(a)(ii).

§ 308.164 [Amended]

21. In § 308.164, paragraph (b)(2) is amended by removing ''§ 308.06'' and adding in its place ''§ 308.6.''

22. In § 308.170, paragraphs (a) and (b) are revised to read as follows:

§ 308.170 Filing, content, and service of documents.

(a) *Time to file.* An application and any other pleading or document related to the application shall be filed with the Executive Secretary within 30 days after service of the final order of the Board of Directors in disposition of the proceeding whenever:

(1) The applicant seeks an award pursuant to 5 U.S.C. 504(a)(1) as the prevailing party in the adversary adjudication or in a discrete significant substantive portion of the proceeding; or

(2) The applicant, in an adversary adjudication arising from an action to enforce compliance with a statutory or regulatory requirement, asserts pursuant to 5 U.S.C. 504(a)(4) that the demand by the FDIC is substantially in excess of the decision of the administrative law judge and is unreasonable when compared with such decision under the facts and circumstances of the case.

(b) *Content.* The application and related documents shall conform to the requirements of § 308.10(b) and (c) of the Uniform Rules.

* * * * *

23. In § 308.171, paragraph (b) is revised to read as follows:

§ 308.171 Responses to application.

* * * * *

(b) *Reply to answer.* The applicant may file a reply with regard to an application filed pursuant to 5 U.S.C. 504 (a)(1), if the FDIC has addressed in its answer any of the following issues: that the position of the FDIC was substantially justified, that the applicant unduly protracted the proceedings, or that special circumstances make an award unjust. The applicant may file a reply with regard to an application filed pursuant to 5 U.S.C. 504 (a)(4), if the FDIC has addressed in its answer any of the following issues: that the applicant has committed a willful violation of law or otherwise acted in bad faith, that the FDIC's demand is reasonable when compared to the decision of the administrative law judge or that special circumstances make an award unjust. The reply shall be filed within 15 days after service of the answer. If the reply is based on any alleged facts not already in the record of the proceeding, the reply shall include either supporting affidavits or a request for further proceedings under § 308.180.

* * * * *

24. In § 308.172, paragraph (b) is amended by adding a new paragraph (b)(3) to read as follows:

§ 308.172 Eligibility of applicants.

* * * * *

(b) * * *

(3) For purposes of an application filed pursuant to 5 U.S.C. 504(a)(4), a small entity as defined in 5 U.S.C. 601.

* * * * *

25. § 308.174 is revised to read as follows:

§ 308.174 Standards for awards.

(a) For applications filed pursuant to 5 U.S.C. 504(a)(1), a prevailing applicant may receive an award for fees and expenses unless the position of the FDIC during the proceeding was substantially justified or special circumstances make the award unjust. An award will be reduced or denied if the applicant has unduly or unreasonably protracted the proceedings. Awards for fees and expenses incurred before the date on which the adversary adjudication was initiated are allowable if their incurrence was necessary to prepare for the proceeding.

(b) For applications filed pursuant to 5 U.S.C. 504(a)(4), an applicant may receive an award unless the demand by the FDIC was reasonable when compared with the decision of the administrative law judge, the applicant has committed a willful violation of law or otherwise acted in bad faith, or special circumstances make an award unjust.

§ 308.175 [Amended]

26. In § 308.175, paragraph (a) is amended by removing ''$75'' and adding in its place ''$125'', and by adding at the end of the paragraph the following sentence: ''Fees and expenses awarded under 5 U.S.C. 504(a)(4) related to defending against an excessive demand shall be paid only as a consequence of appropriations paid in advance''.

27. In § 308.176, paragraph (a) is revised to read as follows:

§ 308.176 Application for awards.

(a) *Contents.* An application for an award of fees and expenses under this subpart shall contain:

(1) The name of the applicant and an identification of the proceeding;

(2) For applications filed pursuant to 5 U.S.C. 504(a)(1), a showing that the applicant has prevailed, and an identification of each issue with regard to which the applicant believes that the position of the FDIC in the proceeding was not substantially justified;

(3) For applications filed pursuant to 5 U.S.C. 504(a)(4), a showing that the demand by the FDIC is substantially in excess of the decision of the administrative law judge and is unreasonable when compared with such decision under the facts and circumstances of the case;

(4) A statement of the amount of fees and expenses for which an award is sought;

(5) For applications filed pursuant to 5 U.S.C. 504(a)(4), a statement of the amount of fees and expenses which constitute appropriations paid in advance;

(6) If the applicant is not an individual, a statement of the number of its employees on the date the proceeding was initiated;

(7) A description of any affiliated individuals or entities, as defined in § 308.172(c)(5), or a statement that none exist;

(8) A declaration that the applicant, together with any affiliates, had a net worth not more than the ceiling established for it by § 308.172(b) as of the date the proceeding was initiated;

(9) For applications filed pursuant to 5 U.S.C. 504(a)(1), a statement whether the applicant is a small entity as defined in 5 U.S.C. 601; and

(10) Any other matters that the applicant wishes the FDIC to consider in determining whether and in what amount an award should be made.

* * * * *

§ 308.179 [Amended]

28. § 308.179 is amended by adding the words ''with a copy to the administrative law judge'' after the word ''Secretary'' and by removing ''20'' and in its place adding ''30''.

PART 330—DEPOSIT INSURANCE COVERAGE

29. The Authority citation for part 330 continues to read as follows:

Authority: 12 U.S.C. 1813(l), 1813(m), 1817(i), 1818(q), 1819(Tenth), 1820(f), 1821(a), 1822(c).

30. In § 330.9, paragraph (a) is revised to read as follows:

§ 330.9 Joint ownership accounts.

(a) *Separate insurance coverage.* Qualifying joint accounts, whether owned as joint tenants with the right of survivorship, as tenants in common or as tenants by the entirety, shall be insured separately from any individually owned (single ownership) deposit accounts maintained by the co-owners. (Example: If A has a single ownership account and also is a joint owner of a qualifying joint account, A's interest in the joint account would be insured separately from his or her

interest in the individual account.) Qualifying joint accounts in the names of both husband and wife which are comprised of community property funds shall be added together and insured up to $200,000, separately from any funds deposited into accounts bearing their individual names.

* * * * *

By order of the Board of Directors.

Dated at Washington, D.C., this 8th day of November, 1999.

Federal Deposit Insurance Corporation.

Robert E. Feldman,

Executive Secretary.

[FR Doc. 99–29830 Filed 11–15–99; 8:45 am]

BILLING CODE 6714–01–P

FEDERAL DEPOSIT INSURANCE CORPORATION

12 CFR Part 343

RIN 3064–AC19

Insured State Nonmember Banks Which Are Municipal Securities Dealers

AGENCY: Federal Deposit Insurance Corporation.

ACTION: Final rule.

SUMMARY: The Federal Deposit Insurance Corporation (FDIC) published a notice of proposed rescission of a rule in the **Federal Register** on May 16, 1997, which proposed to rescind its regulation entitled ''Insured State Nonmember Banks Which Are Municipal Securities Dealers''. The regulation requires insured state nonmember banks which are municipal securities dealers to file with the FDIC certain information about those persons who are or seek to be associated with these dealers as municipal securities principals or municipal securities representatives. The FDIC has determined for a number of reasons, as set forth in the original notice and discussed in **SUPPLEMENTARY INFORMATION**, that the regulation is unnecessary and duplicative, and therefore, the FDIC is rescinding it.

EFFECTIVE DATE: The rescission of this regulation will be effective December 16, 1999.

FOR FURTHER INFORMATION CONTACT: Amy A. Mitchell, Senior Capital Markets Specialist, Division of Supervision (202) 898–3670, or Karen L. Main, Counsel, Legal Division (202) 898–8838.

SUPPLEMENTARY INFORMATION:

I. Background

Part 343 of the FDIC's rules and regulations requires insured state nonmember banks and certain of their subsidiaries, departments and divisions which are municipal securities dealers, as defined in section 3(a)(30) of the Securities Exchange Act of 1934 (15 U.S.C. 78c(a)(30)) (Exchange Act), to file certain information with the FDIC. State nonmember banks must file information about persons who are associated with their subsidiaries, departments and divisions as municipal securities principals or municipal securities representatives. The Exchange Act delegates responsibility to the Municipal Securities Rulemaking Board (MSRB) to formulate rules regulating the activities of municipal securities dealers. The FDIC is authorized, pursuant to section 3(a)(34)(A)(iii) of the Exchange Act, to enforce compliance with MSRB rules by any insured state nonmember bank, as well as a subsidiary or a department or a division thereof, which is a municipal securities dealer (hereafter referred to as a state nonmember bank municipal securities dealer).

One of the areas in which the Exchange Act directs the MSRB to promulgate rules is the qualification of persons associated with municipal securities dealers. Under paragraph (b) of MSRB Rule G–7, persons who are or seek to be associated with municipal securities dealers as municipal securities principals or municipal securities representatives must provide certain background information and conversely, the municipal securities dealers must obtain the information from such persons. The FDIC, the Office of the Comptroller of the Currency (OCC), and the Board of Governors of the Federal Reserve System (FRB) (collectively, the Banking Agencies) developed Form MSD–4 to satisfy this requirement. The FDIC requires state nonmember bank municipal securities dealers to file Form MSD–4 with the FDIC. 12 CFR 343.3(a).

Under paragraph (c) of MSRB Rule G–7, a person who is or seeks to be associated with a municipal securities dealer is required to provide the dealer with a statement correcting information furnished under paragraph (b), to the extent that such information becomes materially inaccurate or incomplete. The FDIC requires state nonmember bank municipal securities dealers to file with the FDIC copies of MSRB Rule G–7 paragraph (c) statements and Form MSD–5s. Form MSD–5, also developed by the Banking Agencies, is a notification by a municipal securities dealer that a municipal securities principal or a municipal securities representative has terminated association with the dealer and the reasons for such termination. 12 CFR 343.3 (b) and (c).

Paragraphs (e) and (f) of the MSRB Rule G–7 contain record retention requirements. The FDIC has imposed substantially the same requirements on state nonmember bank municipal securities dealers. 12 CFR 343.3(d).

Paragraph (g) of the MSRB's Rule G–7 requires every bank municipal securities dealer to file with the appropriate regulatory agency for such bank dealer the information prescribed by the MSRB's Rule G–7, as the appropriate regulatory agency shall require by rule or regulation. As noted above, the FDIC requires that each state nonmember bank municipal securities dealer file Form MSD–4, MSRB Rule G–7 paragraph (c) statement, and Form MSD–5 with the FDIC for each person associated with the dealer as a municipal securities principal or municipal securities representative.

II. Basis for Rescission of Part 343

The reasons supporting the rescission of part 343 of the FDIC's rules and regulations were thoroughly discussed in the original proposal to rescind. (62 FR 26994, May 16, 1997). A summary of the most compelling justifications are provided below.

A. MSRB's Rule G–7 Requires the Provision of Much of the Same Information as § 343.3

The requirements of § 343.3 are largely duplicative of those requirements in MSRB Rule G–7. Therefore, there is no need to retain these redundant requirements in part 343 of the FDIC's rules and regulations. Paragraph (b) of the MSRB's Rule G–7 requires bank municipal securities dealers to obtain certain information from persons who are or seek to be associated with them as municipal securities principals or municipal securities representatives. Paragraph (c) requires filing of statements to correct materially inaccurate or incomplete information. MSRB's Rule G–7 paragraphs (e) and (f) provide recordkeeping requirements, including that the information required in paragraphs (b) and (c) be maintained for three years after the associated person's employment with the municipal securities dealer or broker has terminated.

In order to implement MSRB Rule G–7, the FDIC will continue to provide the Forms MSD–4 and MSD–5 to state nonmember bank municipal securities

dealers. These forms will be reviewed by the FDIC during the regular examination process. Section 15B(c)(5) of the Exchange Act authorizes the FDIC to enforce MSRB regulations in accordance with section 8 of the Federal Deposit Insurance Act (12 U.S.C. 1818).

B. The Number of Covered Entities is Declining

The FDIC has noted a steady decline in the number of state nonmember bank municipal securities dealers over the last several years. Withdrawal of several banks previously registered as bank municipal securities dealers, as well as the consolidation of the industry, has caused the number of state nonmember bank municipal securities dealers to decline to 12. In the interests of efficiency and reducing duplicative requirements for this very small number of covered entities, the FDIC is rescinding its part 343 and relying on MSRB Rule G–7.

C. Implementing Regulations Are Not Required by the Exchange Act

Section 23(a)(1) of the Exchange Act states that the FDIC shall have power ''to make such rules or regulations as may be necessary or appropriate to implement the provisions of this title for which [it is] responsible''. Although section 15B(b)(2)(A) of the Exchange Act requires the MSRB to promulgate regulations addressing the qualification of persons who are or seek to be associated with bank municipal securities dealers, there is no corresponding statutory requirement imposed upon the Banking Agencies, including the FDIC. Therefore, the FDIC may exercise its discretion to determine whether it is necessary or appropriate to adopt regulations such as part 343 or, in this case, to decide that such a regulation is no longer necessary or appropriate.

D. Maintenance of Uniformity Among Banking Agencies

The FDIC undertook the review of part 343 of its rules and regulations as part of a systematic review of its regulations and written policies mandated by section 303(a) of the Riegle Community Development and Regulatory Improvement Act of 1994 (CDRI) (12 U.S.C. 4803(a)). Section 303(a) of CDRI requires each of the Banking Agencies to remove inconsistencies and outmoded and duplicative requirements from its regulations and written policies. The FDIC has determined that part 343 is duplicative of many of the requirements of the MSRB's Rule G–7.

Section 303(a)(2) of CDRI requires the FDIC to work jointly with the other federal banking agencies to make uniform all regulations ''* * * implementing common statutory or supervisory policies''. The Banking Agencies will continue to take a uniform approach to this substantive legal area, although the means of reaching that end is not uniform. The FRB has rescinded its regulation, 12 CFR 208.8(j) (63 FR 37629, July 13, 1998); however, it intends that the applicable state member banks which are municipal securities dealers will continue to file the requisite reports and maintain the applicable records. (62 FR 15272, 15278, March 31, 1997). The OCC streamlined its regulation, 12 CFR part 10, by cross-referencing the relevant MSRB rules and deleting certain redundant provisions (63 FR 29092, May 28, 1998). Therefore, the Banking Agencies have succeeded in moving toward the objective stated in section 303(a)(2) of CDRI as well as accomplishing the overall goal of eliminating duplicative and unnecessary regulations.

III. Comments Received

The FDIC published its notice of proposed rescission in the **Federal Register** on May 16, 1997 (62 FR 26994), and accepted comments through July 15, 1997. No comments were received on the proposal.

IV. Paperwork Reduction Act

In accordance with the Paperwork Reduction Act (44 U.S.C. 3501 *et seq.*), the FDIC may not conduct or sponsor, and a person is not required to respond to, a collection of information unless it displays a currently valid Office of Management and Budget (OMB) control number. The collection of information requirements contained in part 343 (Form MSD–4, the MSRB Rule G–7(c) statement and Form MSD–5) have been approved by OMB under control number 3064–0022 which expires August 31, 2002. The rescission of part 343 will not alter this collection. The requirement under the MSRB's Rule G–7 that bank municipal securities dealers collect the prescribed information from the persons who are or seek to be associated with them as municipal securities principals or municipal securities representatives still remains in effect.

V. Regulatory Flexibility Act

Under section 605(b) of the Regulatory Flexibility Act (RFA) (5 U.S.C. 605(b)), the regulatory flexibility analysis otherwise required under section 604 of the RFA (5 U.S.C. 604) is not required if the head of the agency certifies that the rule will not have a significant economic impact on a substantial number of small entities and the agency publishes such certification and a statement providing the factual basis for such certification in the **Federal Register** along with the final rule.

The FDIC estimates that, currently, there are 12 state nonmember bank municipal securities dealers under its jurisdiction, none of which have $100 million or less in assets. The rescission of part 343 would result in the elimination of duplicative and unnecessary informational requirements found in the FDIC's regulation and allow the covered entities to refer to the MSRB's Rule G–7 requirements instead. Basically, the state nonmember bank's reporting and recordkeeping obligations will remain the same. Thus, the FDIC Board of Directors hereby certifies that the rescission of part 343 of its rules and regulations will not have a significant economic impact on a substantial number of small entities within the meaning of the RFA. Therefore, the provisions of the RFA regarding a final regulatory flexibility analysis (Id. At 604) do not apply here.

VI. Small Business Regulatory Enforcement Fairness Act

The Office of Management and Budget has determined that this rule is not a ''major rule'' within the meaning of the relevant sections of the Small Business Regulatory Enforcement Fairness Act of 1996 (SBREFA), 5 U.S.C. 801, *et seq.* As required by SBREFA, the FDIC will file the appropriate reports with Congress and the General Accounting Office so that the rescission of part 343 can be reviewed.

VII. Assessment of Impact of Federal Regulation on Families

The FDIC has determined that the rescission of this rule will not affect family well-being within the meaning of section 654 of the Treasury and General Government Appropriations Act, 1999, Public Law 105–277, 112 Stat. 2681 (1998).

List of Subjects in 12 CFR Part 343

Banks, banking, Reporting and recordkeeping requirements, Securities.

Under the authority of 12 U.S.C. 1819(a) (Tenth), the Board of Directors of the Federal Deposit Insurance Corporation hereby removes part 343 of title 12 of the Code of Federal Regulations.

PART 343—[REMOVED AND RESERVED]

1. Part 343 is removed and reserved.

By Order of the Board of Directors.

Dated at Washington, D.C. this 8th day of November, 1999.

Federal Deposit Insurance Corporation.

Robert E. Feldman,

Executive Secretary.

[FR Doc. 99–29853 Filed 11–15–99; 8:45 am]

BILLING CODE 6714–01–P

DEPARTMENT OF TRANSPORTATION

Federal Aviation Administration

14 CFR Part 39

[Docket No. 99–SW–55–AD; Amendment 39–11419; AD 99–23–23]

RIN 2120–AA64

Airworthiness Directives; Bell Helicopter Textron, Inc. Model 412, 412EP and 412CF Helicopters

AGENCY: Federal Aviation Administration, DOT.

ACTION: Final rule; request for comments.

SUMMARY: This amendment adopts a new airworthiness directive (AD) applicable to Bell Helicopter Textron, Inc. (BHTI) Model 412, 412EP, and 412CF helicopters. This action requires inspecting and measuring the thickness of certain main rotor yoke assemblies. This AD also requires adding 500 hours time-in-service (TIS) to the total time for main rotor yoke assemblies that measure below 0.478-inch thickness and noting the measurement and added TIS on the component history card or equivalent record. This amendment is prompted by a report of an emergency landing due to severe main rotor vibration on a BHTI Model 412 helicopter. Subsequent fatigue analysis indicates that the main rotor yoke assembly (yoke) does not have the anticipated service life when manufactured below 0.478-inch thickness. The actions specified in this AD are intended to prevent a fatigue failure of the yoke, loss of a main rotor blade, and subsequent loss of control of the helicopter.

DATES: Effective December 1, 1999.

The incorporation by reference of certain publications listed in the regulations is approved by the Director of the **Federal Register** as of December 1, 1999.

Comments for inclusion in the Rules Docket must be received on or before January 18, 2000.

ADDRESSES: Submit comments in triplicate to the Federal Aviation Administration (FAA), Office of the Regional Counsel, Southwest Region, Attention: Rules Docket No. 99–SW–55–AD, 2601 Meacham Blvd., Room 663, Fort Worth, Texas 76137.

The service information referenced in this AD may be obtained from Bell Helicopter Textron, Inc., P.O. Box 482, Fort Worth, Texas 76101, telephone (817) 280–3391, fax (817) 280–6466. This information may be examined at the FAA, Office of the Regional Counsel, Southwest Region, 2601 Meacham Blvd., Room 663, Fort Worth, Texas 76137; or at the Office of the Federal Register, 800 North Capitol Street, NW., suite 700, Washington, DC.

FOR FURTHER INFORMATION CONTACT: Michael Kohner, FAA, Rotorcraft Directorate, Rotorcraft Certification Office, 2601 Meacham Blvd., Fort Worth, Texas 76137, telephone (817) 222–5447, fax (817) 222–5783.

SUPPLEMENTARY INFORMATION: This amendment adopts a new AD applicable to BHTI Model 412, 412EP, and 412CF helicopters. This action requires inspecting and measuring each yoke, part number (P/N) 412–010–101–123 or –127, installed on Model 412 and 412EP helicopters, serial numbers (S/N) 33001 through 33213, 34001 through 34036, and 36001 through 36204; and on Model 412CF helicopters, S/N 46400 through 46499. If a yoke measures less than 0.478-inch thickness, this AD requires adding 500 hours TIS to the total time for the component and noting the measurement and the increase in hours TIS on the component history card or equivalent record. This amendment is prompted by a report of an emergency landing due to severe main rotor vibration on a BHTI Model 412 helicopter. Subsequent fatigue analysis indicates that a yoke does not have the anticipated service life when manufactured to less than a 0.478-inch thickness. This condition, if not corrected could result in a fatigue failure of the yoke, loss of a main rotor blade, and subsequent loss of control of the helicopter.

The FAA has reviewed BHTI Service Bulletins 412–98–93 and 412CF–98–5, both dated March 2, 1998 (ASB), which describe procedures for inspecting and measuring certain yokes and imposing a flight-hour penalty of 500 hours TIS for yokes measuring less than 0.478-inch thickness.

Since an unsafe condition has been identified that is likely to exist or develop on other BHTI Model 412, 412EP, and 412CF helicopters of the same type design, this AD is being issued to prevent a fatigue failure of a yoke, loss of a main rotor blade, and subsequent loss of control of the helicopter. This AD requires inspecting and measuring each yoke, P/N 412–010–101–123 and –127, for thickness. The AD also requires noting on the component history card or equivalent record the thickness measurement and adding 500 hours TIS to the total time of any yoke that measures under 0.478-inch thickness. The actions are required to be accomplished in accordance with the applicable ASB described previously. The short compliance time involved is required because the previously described critical unsafe condition can adversely affect the controllability of the helicopter. Therefore, to prevent a fatigue failure of the yoke, this AD must be issued immediately.

Since a situation exists that requires the immediate adoption of this regulation, it is found that notice and opportunity for prior public comment hereon are impracticable, and that good cause exists for making this amendment effective in less than 30 days.

The FAA estimates that 149 helicopters will be affected by this AD, that it will take approximately 8 work hours to accomplish the measurement of the yoke thickness and to annotate the history card or equivalent component record, and that the average labor rate is $60 per work hour. Based on these figures, the total cost impact of the AD on U.S. operators is estimated to be $71,520.

Comments Invited

Although this action is in the form of a final rule that involves requirements affecting flight safety and, thus, was not preceded by notice and an opportunity for public comment, comments are invited on this rule. Interested persons are invited to comment on this rule by submitting such written data, views, or arguments as they may desire. Communications should identify the Rules Docket number and be submitted in triplicate to the address specified under the caption **ADDRESSES.** All communications received on or before the closing date for comments will be considered, and this rule may be amended in light of the comments received. Factual information that supports the commenter's ideas and suggestions is extremely helpful in evaluating the effectiveness of the AD action and determining whether additional rulemaking action would be needed.

Comments are specifically invited on the overall regulatory, economic, environmental, and energy aspects of

the rule that might suggest a need to modify the rule. All comments submitted will be available, both before and after the closing date for comments, in the Rules Docket for examination by interested persons. A report that summarizes each FAA-public contact concerned with the substance of this AD will be filed in the Rules Docket.

Commenters wishing the FAA to acknowledge receipt of their comments submitted in response to this rule must submit a self-addressed, stamped postcard on which the following statement is made: ''Comments to Docket No. 99–SW–55.'' The postcard will be date stamped and returned to the commenter.

The regulations adopted herein will not have substantial direct effects on the States, on the relationship between the national government and the States, or on the distribution of power and responsibilities among the various levels of government. Therefore, in accordance with Executive Order 12612, it is determined that this final rule does not have sufficient federalism implications to warrant the preparation of a Federalism Assessment.

The FAA has determined that this regulation is an emergency regulation that must be issued immediately to correct an unsafe condition in aircraft, and that it is not a ''significant regulatory action'' under Executive Order 12866. It has been determined further that this action involves an emergency regulation under DOT Regulatory Policies and Procedures (44 FR 11034, February 26, 1979). If it is determined that this emergency regulation otherwise would be significant under DOT Regulatory Policies and Procedures, a final regulatory evaluation will be prepared and placed in the Rules Docket. A copy of it, if filed, may be obtained from the Rules Docket at the location provided under the caption **ADDRESSES**.

List of Subjects in 14 CFR Part 39

Air transportation, Aircraft, Aviation safety, Incorporation by reference, Safety.

Adoption of the Amendment

Accordingly, pursuant to the authority delegated to me by the Administrator, the Federal Aviation Administration amends part 39 of the Federal Aviation Regulations (14 CFR part 39) as follows:

PART 39—AIRWORTHINESS DIRECTIVES

1. The authority citation for part 39 continues to read as follows:

Authority: 49 U.S.C. 106(g), 40113, 44701.

§ 39.13 [Amended]

2. Section 39.13 is amended by adding a new airworthiness directive to read as follows:

AD 99–23–23 Bell Helicopter Textron, Inc. Amendment 39–11419. Docket No. 99–SW–55–AD.

Applicability: Model 412 or 412EP helicopters, serial numbers (S/N) 33001 through 33213, 34001 through 34036, and 36001 through 36204, or Model 412CF helicopter, S/N 46400 through 46499, with main rotor yoke assembly (yoke), part number 412–010–101–123 or –127, installed, certificated in any category.

Note 1: This AD applies to each helicopter identified in the preceding applicability provision, regardless of whether it has been otherwise modified, altered, or repaired in the area subject to the requirements of this AD. For helicopters that have been modified, altered, or repaired so that the performance of the requirements of this AD is affected, the owner/operator must request approval for an alternative method of compliance in accordance with paragraph (b) of this AD. The request should include an assessment of the effect of the modification, alteration, or repair on the unsafe condition addressed by this AD; and, if the unsafe condition has not been eliminated, the request should include specific proposed actions to address it.

Compliance: Required within 10 hours time-in-service (TIS) for a yoke with 4,500 or more hours TIS or required within 90 days for a yoke with less than 4,500 hours TIS but prior to the accumulation of 4,500 hours TIS, unless accomplished previously.

To prevent a fatigue failure of a yoke, loss of a main rotor blade, and subsequent loss of control of the helicopter, accomplish the following:

(a) Inspect and measure each yoke in accordance with the Accomplishment Instructions, paragraphs 1 through 6, of Bell Helicopter Textron, Inc. (BHTI), Alert Service Bulletin (ASB) 412–98–93, applicable to the Model 412 and 412EP helicopters, or BHTI ASB 412CF–98–5, applicable to the Model 412CF helicopters, both dated March 2, 1998. If any measurement for a yoke is less than 0.478-inch thickness, add 500 hours to the TIS indicated on the component history card or equivalent record.

(b) An alternative method of compliance or adjustment of the compliance time that provides an acceptable level of safety may be used if approved by the Manager, Rotorcraft Certification Office, FAA, Rotorcraft Directorate. Operators shall submit their requests through an FAA Principal Maintenance Inspector, who may concur or comment and then send it to the Manager, Rotorcraft Certification Office.

Note 2: Information concerning the existence of approved alternative methods of compliance with this AD, if any, may be obtained from the Rotorcraft Certification Office.

(c) Special flight permits may be issued in accordance with §§ 21.197 and 21.199 of the Federal Aviation Regulations (14 CFR 21.197 and 21.199) to operate the helicopter to a location where the requirements of this AD can be accomplished.

(d) The inspection shall be done in accordance with Bell Helicopter Textron, Inc. Alert Service Bulletins 412–98–93 or 412CF–98–5, both dated March 2, 1998, as applicable. This incorporation by reference was approved by the Director of the Federal Register in accordance with 5 U.S.C. 552(a) and 1 CFR part 51. Copies may be obtained from Bell Helicopter Textron, Inc., P.O. Box 482, Fort Worth, Texas 76101, telephone (817) 280–3391, fax (817) 280–6466. Copies may be inspected at the FAA, Office of the Regional Counsel, Southwest Region, 2601 Meacham Blvd., Room 663, Fort Worth, Texas; or at the Office of the Federal Register, 800 North Capitol Street, NW., suite 700, Washington, DC.

(e) This amendment becomes effective on December 1, 1999.

Issued in Fort Worth, Texas, on November 4, 1999.

Henry A. Armstrong,

Manager, Rotorcraft Directorate, Aircraft Certification Service.

[FR Doc. 99–29612 Filed 11–15–99; 8:45 am]

BILLING CODE 4910–13–P

DEPARTMENT OF TRANSPORTATION

Federal Aviation Administration

14 CFR Part 39

[Docket No. 98–SW–78–AD; Amendment 39–11413; AD 99–23–17]

RIN 2120–AA64

Airworthiness Directives; Eurocopter France Model AS 332C, L, and L1 Helicopters

AGENCY: Federal Aviation Administration, DOT.

ACTION: Final rule.

SUMMARY: This amendment adopts a new airworthiness directive (AD), applicable to Eurocopter France Model AS 332C, L, and L1 helicopters, that requires a one-time inspection of the length of the main gearbox epicyclic module upper casing bearing attachment bolts (attachment bolts), and if they exceed a certain length, replacing the epicyclic module to preclude a potential interference between the attachment bolts and the 2nd stage planet gear cage web. This amendment is prompted by a report of interference between the attachment bolts and the second stage planet gear cage web of the epicyclic module in the main gearbox. The actions specified by this AD are intended to prevent failure of the second stage planet gear of the main gearbox, loss of main rotor drive and subsequent loss of control of the helicopter.

DATES: Effective December 21, 1999.

The incorporation by reference of certain publications listed in the regulations is approved by the Director of the Federal Register as of December 21, 1999.

ADDRESSES: The service information referenced in this AD may be obtained from American Eurocopter Corporation, 2701 Forum Drive, Grand Prairie, Texas 75053–4005, telephone (972) 641–3460, fax (972) 641–3527. This information may be examined at the FAA, Office of the Regional Counsel, Southwest Region, Room 663, Fort Worth, Texas; or at the Office of the Federal Register, 800 North Capitol Street, NW., suite 700, Washington, DC.

FOR FURTHER INFORMATION CONTACT: Shep Blackman, Aerospace Engineer, FAA, Rotorcraft Directorate, Rotorcraft Standards Staff, 2601 Meacham Blvd., Fort Worth, Texas 76137, telephone (817) 222–5296, fax (817) 222–5961.

SUPPLEMENTARY INFORMATION: A proposal to amend part 39 of the Federal Aviation Regulations (14 CFR part 39) to include an airworthiness directive (AD) that is applicable to Eurocopter France Model AS 332C, L, and L1 helicopters was published in the **Federal Register** on August 23, 1999 (64 FR 45929). That action proposed to require a one-time inspection of the length of the attachment bolts, and if any exceed 53mm in length, replacing the epicyclic module.

Interested persons have been afforded an opportunity to participate in the making of this amendment. No comments were received on the proposal or the FAA's determination of the cost to the public. The FAA has determined that air safety and the public interest require the adoption of the rule as proposed except for two nonsubstantive changes that have been made to paragraph (c) and Note 2 of the AD. In paragraph (c), the NPRM incorrectly states that alternative methods of compliance (AMOC) or adjustments of the compliance time may be approved by the ''Manager, Rotorcraft Standards Staff, Rotorcraft Directorate.'' This is incorrect and has been changed to state that the Manager, Regulations Group, Rotorcraft Directorate, is responsible for approving any AMOC or adjustment of the compliance time. Note 2 of the NPRM states that information concerning the existence of approved AMOC may be obtained from the ''Rotorcraft Standards Staff;'' this is also incorrect and has been changed to state that information may be obtained from the ''Regulations Group.'' The FAA has determined that these changes will neither increase the economic burden on any operator nor increase the scope of the AD.

The FAA estimates that 1 helicopter of U.S. registry will be affected by this AD, that it will take approximately 8 work hours per helicopter to accomplish the required actions, and that the average labor rate is $60 per work hour. Required parts will cost approximately $365,235 to replace the epicyclic module, if necessary. The cost of the attachment bolts is $11. Based on these figures, the total cost impact of the AD on U.S. operators is estimated to be $491, assuming the bolts are the correct length and the epicyclic module does not have to be replaced.

The regulations adopted herein will not have substantial direct effects on the States, on the relationship between the national government and the States, or on the distribution of power and responsibilities among the various levels of government. Therefore, in accordance with Executive Order 12612, it is determined that this final rule does not have sufficient federalism implications to warrant the preparation of a Federalism Assessment.

For the reasons discussed above, I certify that this action (1) is not a ''significant regulatory action'' under Executive Order 12866; (2) is not a ''significant rule'' under DOT Regulatory Policies and Procedures (44 FR 11034, February 26, 1979); and (3) will not have a significant economic impact, positive or negative, on a substantial number of small entities under the criteria of the Regulatory Flexibility Act. A final evaluation has been prepared for this action and it is contained in the Rules Docket. A copy of it may be obtained from the Rules Docket at the location provided under the caption **ADDRESSES.**

List of Subjects in 14 CFR Part 39

Air transportation, Aircraft, Aviation safety, Incorporation by reference, Safety.

Adoption of the Amendment

Accordingly, pursuant to the authority delegated to me by the Administrator, the Federal Aviation Administration amends part 39 of the Federal Aviation Regulations (14 CFR part 39) as follows:

PART 39—AIRWORTHINESS DIRECTIVES

1. The authority citation for part 39 continues to read as follows:

Authority: 49 U.S.C. 106(g), 40113, 44701.

§ 39.13 [Amended]

2. Section 39.13 is amended by adding a new airworthiness directive to read as follows:

AD 99–23–17 Eurocopter France: Amendment 39–11413. Docket No. 98–SW–78–AD.

Applicability: Model AS 332C, L, and L1 helicopters, with epicyclic modules, part number 332A32–2007–00 or –01, with serial numbers with the prefix of ''M'', from 100 through 689 or 3000 through 3048, installed, certificated in any category.

Note 1: This AD applies to each helicopter identified in the preceding applicability provision, regardless of whether it has been otherwise modified, altered, or repaired in the area subject to the requirements of this AD. For helicopters that have been modified, altered, or repaired so that the performance of the requirements of this AD is affected, the owner/operator must request approval for an alternative method of compliance in accordance with paragraph (c) of this AD. The request should include an assessment of the effect of the modification, alteration, or repair on the unsafe condition addressed by this AD; and, if the unsafe condition has not been eliminated, the request should include specific proposed actions to address it.

Compliance: Required as indicated in paragraph DD of Eurocopter Service Bulletin No. 01.41, dated November 1995 (95–11) (SB), unless accomplished previously.

To prevent failure of the second stage planet gear of the main gearbox, loss of main rotor drive and subsequent loss of control of the helicopter, accomplish the following:

(a) Inspect each main gearbox epicyclic module upper casing bearing attachment bolt (attachment bolt) in accordance with paragraph CC of the SB.

(b) If any attachment bolt length is greater than 53mm (2.086 inches), remove the epicyclic module and replace the epicyclic module with an airworthy epicyclic module before further flight.

(c) An alternative method of compliance or adjustment of the compliance time that provides an acceptable level of safety may be used if approved by the Manager, Regulations Group, Rotorcraft Directorate, FAA. Operators shall submit their requests through an FAA Principal Maintenance Inspector, who may concur or comment and then send it to the Manager, Regulations Group.

Note 2: Information concerning the existence of approved alternative methods of compliance with this AD, if any, may be obtained from the Regulations Group.

(d) Special flight permits may be issued in accordance with §§ 21.197 and 21.199 of the Federal Aviation Regulations (14 CFR 21.197 and 21.199) to operate the helicopter to a location where the requirements of this AD can be accomplished.

(e) The compliance and inspection shall be done in accordance with paragraphs CC and DD of Eurocopter Service Bulletin No. 01.41, dated November 1995 (95–11). This incorporation by reference was approved by the Director of the Federal Register in accordance with 5 U.S.C. 552(a) and 1 CFR part 51. Copies may be obtained from American Eurocopter Corporation, 2701

Forum Drive, Grand Prairie, Texas 75053–4005, telephone (972) 641–3460, fax (972) 641–3527. Copies may be inspected at the FAA, Office of the Regional Counsel, Southwest Region, 2601 Meacham Blvd., Room 663, Fort Worth, Texas; or at the Office of the Federal Register, 800 North Capitol Street, NW., suite 700, Washington, DC.

(f) This amendment becomes effective on December 21, 1999.

Note 3: The subject of this AD is addressed in Direction Generale De L'Aviation Civile (France) AD 93–131–051(B)R1, dated January 18, 1998.

Issued in Fort Worth, Texas, on November 2, 1999.

Henry A. Armstrong,

Manager, Rotorcraft Directorate, Aircraft Certification Service.

[FR Doc. 99–29611 Filed 11–15–99; 8:45 am]

BILLING CODE 4910–13–P

DEPARTMENT OF TRANSPORTATION

Federal Aviation Administration

14 CFR Part 39

[Docket No. 99–NM–15–AD; Amendment 39–11415; AD 99–23–19]

RIN 2120–AA64

Airworthiness Directives; Learjet Model 31, 31A, 35, 35A, and 60 Airplanes

AGENCY: Federal Aviation Administration, DOT.

ACTION: Final rule.

SUMMARY: This amendment adopts a new airworthiness directive (AD), applicable to certain Learjet Model 31, 31A, 35, 35A, and 60 airplanes, that requires a visual inspection of the spoiler actuators to determine the serial number of the spoiler actuators; and replacement of the spoiler actuators with new actuators, if necessary. This amendment is prompted by failure of a spoiler actuator piston rod during the first production flight of a Model 60 airplane due to an incomplete heat treatment process. The actions specified by this AD are intended to prevent failure of the spoiler actuator, which could result in the spoiler panel floating and inducing an uncommanded roll of the airplane.

DATES: Effective December 21, 1999.

The incorporation by reference of certain publications listed in the regulations is approved by the Director of the Federal Register as of December 21, 1999.

ADDRESSES: The service information referenced in this AD may be obtained from Learjet, Inc., One Learjet Way, Wichita, Kansas 67209–2942. This information may be examined at the Federal Aviation Administration (FAA), Transport Airplane Directorate, Rules Docket, 1601 Lind Avenue, SW., Renton, Washington; or at the FAA, Small Airplane Directorate, Wichita Aircraft Certification Office, 1801 Airport Road, Room 100, Mid-Continent Airport, Wichita, Kansas; or at the Office of the Federal Register, 800 North Capitol Street, NW., suite 700, Washington, DC.

FOR FURTHER INFORMATION CONTACT: Shane Bertish, Aerospace Engineer, Systems and Equipment Branch, ACE–116W, FAA, Small Airplane Directorate, Wichita Aircraft Certification Office, 1801 Airport Road, Room 100, Mid-Continent Airport, Wichita, Kansas 67209; telephone (316) 946–4156; fax (316) 946–4407.

SUPPLEMENTARY INFORMATION: A proposal to amend part 39 of the Federal Aviation Regulations (14 CFR part 39) to include an airworthiness directive (AD) that is applicable to certain Learjet Model 31, 31A, 35, 35A, and 60 airplanes was published in the **Federal Register** on August 30, 1999 (64 FR 47148). That action proposed to require a visual inspection of the spoiler actuators to determine the serial number of the spoiler actuators; and replacement of the spoiler actuators with new actuators, if necessary.

Comments

Interested persons have been afforded an opportunity to participate in the making of this amendment. No comments were submitted in response to the proposal or the FAA's determination of the cost to the public.

Conclusion

The FAA has determined that air safety and the public interest require the adoption of the rule as proposed.

Cost Impact

There are approximately 45 airplanes of the affected design in the worldwide fleet. The FAA estimates that 37 airplanes of U.S. registry will be affected by this AD, that it will take approximately 1 work hour per airplane to accomplish the inspection, and that the average labor rate is $60 per work hour. Based on these figures, the cost impact of this AD on U.S. operators is estimated to be $2,220, or $60 per airplane.

The cost impact figure discussed above is based on assumptions that no operator has yet accomplished any of the requirements of this AD action, and that no operator would accomplish those actions in the future if this AD were not adopted.

Regulatory Impact

The regulations adopted herein will not have substantial direct effects on the States, on the relationship between the national government and the States, or on the distribution of power and responsibilities among the various levels of government. Therefore, in accordance with Executive Order 12612, it is determined that this final rule does not have sufficient federalism implications to warrant the preparation of a Federalism Assessment.

For the reasons discussed above, I certify that this action (1) is not a ''significant regulatory action'' under Executive Order 12866; (2) is not a ''significant rule'' under DOT Regulatory Policies and Procedures (44 FR 11034, February 26, 1979); and (3) will not have a significant economic impact, positive or negative, on a substantial number of small entities under the criteria of the Regulatory Flexibility Act. A final evaluation has been prepared for this action and it is contained in the Rules Docket. A copy of it may be obtained from the Rules Docket at the location provided under the caption **ADDRESSES**.

List of Subjects in 14 CFR Part 39

Air transportation, Aircraft, Aviation safety, Incorporation by reference, Safety.

Adoption of the Amendment

Accordingly, pursuant to the authority delegated to me by the Administrator, the Federal Aviation Administration amends part 39 of the Federal Aviation Regulations (14 CFR part 39) as follows:

PART 39—AIRWORTHINESS DIRECTIVES

1. The authority citation for part 39 continues to read as follows:

Authority: 49 U.S.C. 106(g), 40113, 44701.

§ 39.13 [Amended]

2. Section 39.13 is amended by adding the following new airworthiness directive:

99–23–19 Learjet, Inc.: Amendment 39–11415. Docket 99–NM–15–AD.

Applicability: Model 31 and 31A airplanes, serial numbers 31–033, 31–105, 31–114, 31–126, and 31–150 through 31–161 inclusive; Model 35 and 35A airplanes, serial numbers 35–065, 35–242, 35–300, 35–323, 35–447, 35–622, and 35–670; and Model 60 airplanes, serial numbers 60–029, 60–050, 60–120 through 60–139 inclusive; certificated in any category.

Note 1: This AD applies to each airplane identified in the preceding applicability provision, regardless of whether it has been modified, altered, or repaired in the area

subject to the requirements of this AD. For airplanes that have been modified, altered, or repaired so that the performance of the requirements of this AD is affected, the owner/operator must request approval for an alternative method of compliance in accordance with paragraph (b) of this AD. The request should include an assessment of the effect of the modification, alteration, or repair on the unsafe condition addressed by this AD; and, if the unsafe condition has not been eliminated, the request should include specific proposed actions to address it.

Compliance: Required as indicated, unless accomplished previously.

To prevent failure of the spoiler actuator, which could result in the spoiler panel floating and inducing an uncommanded roll of the airplane, accomplish the following:

Inspection and Replacement

(a) Within 150 flight hours after the effective date of this AD, perform a visual inspection to determine the serial number of the spoiler actuators, in accordance with Learjet Service Bulletins SB 31–27–19, dated December 14, 1998 (for Model 31 and 31A airplanes); SB 35–27–36, dated December 14, 1998 (for Model 35 and 35A airplanes); or SB 60–27–21, dated December 14, 1998 (for Model 60 airplanes); as applicable.

(1) If the serial number is not listed in the applicable service bulletin, no further action is required by this AD.

(2) If the serial number is listed in the applicable service bulletin, prior to further flight, replace the spoiler actuators with new actuators in accordance with the Accomplishment Instructions of the applicable service bulletin.

Alternative Methods of Compliance

(b) An alternative method of compliance or adjustment of the compliance time that provides an acceptable level of safety may be used if approved by the Manager, Wichita Aircraft Certification Office (ACO), FAA, Small Airplane Directorate. Operators shall submit their requests through an appropriate FAA Principal Maintenance Inspector, who may add comments and then send it to the Manager, Wichita ACO.

Note 2: Information concerning the existence of approved alternative methods of compliance with this AD, if any, may be obtained from the Wichita ACO.

Special Flight Permits

(c) Special flight permits may be issued in accordance with §§ 21.197 and 21.199 of the Federal Aviation Regulations (14 CFR 21.197 and 21.199) to operate the airplane to a location where the requirements of this AD can be accomplished.

Incorporation by Reference

(d) The actions shall be done in accordance with Learjet Service Bulletin SB 31–27–19, dated December 14, 1998, Learjet Service Bulletin SB 35–27–36, dated December 14, 1998, or Learjet Service Bulletin SB 60–27–21, dated December 14, 1998, as applicable. This incorporation by reference was approved by the Director of the Federal Register in accordance with 5 U.S.C. 552(a) and 1 CFR part 51. Copies may be obtained from Learjet, Inc., One Learjet Way, Wichita, Kansas 67209–2942. Copies may be inspected at the FAA, Transport Airplane Directorate, 1601 Lind Avenue, SW., Renton, Washington; or at the FAA, Small Airplane Directorate, Wichita Aircraft Certification Office, 1801 Airport Road, Room 100, Mid-Continent Airport, Wichita, Kansas; or at the Office of the Federal Register, 800 North Capitol Street, NW., suite 700, Washington, DC.

(e) This amendment becomes effective on December 21, 1999.

Issued in Renton, Washington, on October 28, 1999.

D.L. Riggin,

Acting Manager, Transport Airplane Directorate, Aircraft Certification Service.

[FR Doc. 99–29470 Filed 11–15–99; 8:45 am]

BILLING CODE 4910–13–U

DEPARTMENT OF TRANSPORTATION

Federal Aviation Administration

14 CFR Part 39

RIN 2120–AA64

[Docket No. 99–NM–101–AD; Amendment 39–11417; AD 99–23–21]

Airworthiness Directives; Boeing Model 757 Series Airplanes

AGENCY: Federal Aviation Administration, DOT.

ACTION: Final rule.

SUMMARY: This amendment adopts a new airworthiness directive (AD), applicable to certain Boeing Model 757 series airplanes, that requires a modification of the reverse thrust lever assemblies and replacement of the spring bumper assemblies of the thrust reverser sleeves with new assemblies. This amendment is prompted by an FAA review of the thrust reverser system on all transport category airplanes including the Boeing Model 757 series airplane. The actions specified by this AD are intended to prevent operation with an energized sync lock or malfunctioning sleeve locking devices, which could result in the deployment of a thrust reverser in flight and subsequent reduced controllability of the airplane.

DATES: Effective December 21, 1999.

The incorporation by reference of certain publications listed in the regulations is approved by the Director of the Federal Register as of December 21, 1999.

ADDRESSES: The service information referenced in this AD may be obtained from Boeing Commercial Airplane Group, P.O. Box 3707, Seattle, Washington 98124–2207. This information may be examined at the Federal Aviation Administration (FAA), Transport Airplane Directorate, Rules Docket, 1601 Lind Avenue, SW., Renton, Washington; or at the Office of the Federal Register, 800 North Capitol Street, NW., suite 700, Washington, DC.

FOR FURTHER INFORMATION CONTACT: Kathrine Rask, Aerospace Engineer, Propulsion Branch, ANM–140S, FAA, Transport Airplane Directorate, Seattle Aircraft Certification Office, 1601 Lind Avenue, SW., Renton, Washington 98055–4056; telephone (425) 227–1547; fax (425) 227–1181.

SUPPLEMENTARY INFORMATION: A proposal to amend part 39 of the Federal Aviation Regulations (14 CFR part 39) to include an airworthiness directive (AD) that is applicable to certain Boeing Model 757 series airplanes was published in the **Federal Register** on August 23, 1999 (64 FR 45927). That action proposed to require a modification of the reverse thrust lever assemblies and replacement of the spring bumper assemblies of the thrust reverser sleeves with new assemblies.

Comments

Interested persons have been afforded an opportunity to participate in the making of this amendment. No comments were submitted in response to the proposal or the FAA's determination of the cost to the public.

Conclusion

The FAA has determined that air safety and the public interest require the adoption of the rule as proposed.

Cost Impact

There are approximately 308 airplanes of the affected design in the worldwide fleet.

The FAA estimates that the modification of the reverse thrust lever assemblies will be required to be accomplished on 169 U.S. registered airplanes. It will take approximately 8 work hours per airplane to accomplish the required modification at an average labor rate of $60 per work hour. Required parts will cost approximately $29 per airplane. Based on these figures, the cost impact of this required modification on U.S. operators is estimated to be $86,021, or $509 per airplane.

The FAA estimates that the replacement of the spring bumper assemblies will be required to be accomplished on 92 U.S. registered airplanes. It will take approximately 10 work hours per airplane to accomplish the required replacement at an average labor rate of $60 per work hour. Required parts will cost approximately

$5,178 per airplane. Based on these figures, the cost impact of this required replacement on U.S. operators is estimated to be $531,576, or $5,778 per airplane.

The cost impact figures discussed above are based on assumptions that no operator has yet accomplished any of the requirements of this AD action, and that no operator would accomplish those actions in the future if this AD were not adopted.

Regulatory Impact

The regulations adopted herein will not have substantial direct effects on the States, on the relationship between the national government and the States, or on the distribution of power and responsibilities among the various levels of government. Therefore, in accordance with Executive Order 12612, it is determined that this final rule does not have sufficient federalism implications to warrant the preparation of a Federalism Assessment.

For the reasons discussed above, I certify that this action (1) is not a ''significant regulatory action'' under Executive Order 12866; (2) is not a ''significant rule'' under DOT Regulatory Policies and Procedures (44 FR 11034, February 26, 1979); and (3) will not have a significant economic impact, positive or negative, on a substantial number of small entities under the criteria of the Regulatory Flexibility Act. A final evaluation has been prepared for this action and it is contained in the Rules Docket. A copy of it may be obtained from the Rules Docket at the location provided under the caption **ADDRESSES**.

List of Subjects in 14 CFR Part 39

Air transportation, Aircraft, Aviation safety, Incorporation by reference, Safety.

Adoption of the Amendment

Accordingly, pursuant to the authority delegated to me by the Administrator, the Federal Aviation Administration amends part 39 of the Federal Aviation Regulations (14 CFR part 39) as follows:

PART 39—AIRWORTHINESS DIRECTIVES

1. The authority citation for part 39 continues to read as follows:

Authority: 49 U.S.C. 106(g), 40113, 44701.

§ 39.13 [Amended]

2. Section 39.13 is amended by adding the following new airworthiness directive:

99–23–21 **Boeing:** Amendment 39–11417. Docket 99–NM–101–AD.

Applicability: Model 757 series airplanes, as listed in Boeing Service Bulletin 757–76–0009, Revision 1, dated December 3, 1998, or Boeing Service Bulletin 757–78–0012, dated August 31, 1989; certificated in any category.

Note 1: This AD applies to each airplane identified in the preceding applicability provision, regardless of whether it has been modified, altered, or repaired in the area subject to the requirements of this AD. For airplanes that have been modified, altered, or repaired so that the performance of the requirements of this AD is affected, the owner/operator must request approval for an alternative method of compliance in accordance with paragraph (c) of this AD. The request should include an assessment of the effect of the modification, alteration, or repair on the unsafe condition addressed by this AD; and, if the unsafe condition has not been eliminated, the request should include specific proposed actions to address it.

Compliance: Required as indicated, unless accomplished previously.

To prevent operation with an energized sync lock or malfunctioning sleeve locking devices, which could result in deployment of a thrust reverser in flight and subsequent reduced controllability of the airplane, accomplish the following:

(a) For airplanes listed in Boeing Service Bulletin 757–76–0009, Revision 1, dated December 3, 1998: Within 2 years after the effective date of the AD, replace the reverse thrust switches and actuators with improved switches and actuators, and modify the reverse lever links and thrust control levers in accordance with the service bulletin.

Note 2: Modifications accomplished prior to the effective date of this AD in accordance with Boeing Service Bulletin 757–76–0009, dated November 8, 1990, are considered acceptable for compliance with the applicable action specified in this amendment.

(b) For airplanes listed in Boeing Service Bulletin 757–78–0012, dated August 31, 1989: Within 2 years after the effective date of the AD, replace the spring bumper assemblies of the thrust reverser sleeve with improved assemblies in accordance with the service bulletin.

Alternative Methods of Compliance

(c) An alternative method of compliance or adjustment of the compliance time that provides an acceptable level of safety may be used if approved by the Manager, Seattle Aircraft Certification Office (ACO), FAA, Transport Airplane Directorate. Operators shall submit their requests through an appropriate FAA Principal Maintenance Inspector, who may add comments and then send it to the Manager, Seattle ACO.

Note 3: Information concerning the existence of approved alternative methods of compliance with this AD, if any, may be obtained from the Seattle ACO.

Special Flight Permits

(d) Special flight permits may be issued in accordance with §§ 21.197 and 21.199 of the Federal Aviation Regulations (14 CFR 21.197 and 21.199) to operate the airplane to a location where the requirements of this AD can be accomplished.

Incorporation by Reference

(e) The actions shall be done in accordance with Boeing Service Bulletin 757–76–0009, Revision 1, dated December 3, 1998, or Boeing Service Bulletin 757–78–0012, dated August 31, 1989, as applicable. This incorporation by reference was approved by the Director of the **Federal Register** in accordance with 5 U.S.C. 552(a) and 1 CFR part 51. Copies may be obtained from Boeing Commercial Airplane Group, P.O. Box 3707, Seattle, Washington 98124–2207. Copies may be inspected at the FAA, Transport Airplane Directorate, 1601 Lind Avenue, SW., Renton, Washington; or at the Office of the Federal Register, 800 North Capitol Street, NW., suite 700, Washington, DC.

(f) This amendment becomes effective on December 21, 1999.

Issued in Renton, Washington, on November 4, 1999.

D.L. Riggin,

Acting Manager, Transport Airplane Directorate, Aircraft Certification Service.

[FR Doc. 99–29471 Filed 11–15–99; 8:45 am]

BILLING CODE 4910–13–P

DEPARTMENT OF HEALTH AND HUMAN SERVICES

Food and Drug Administration

21 CFR Part 310

[Docket No. 99N–0188]

Progestational Drug Products for Human Use; Requirements for Labeling Directed to the Patient

AGENCY: Food and Drug Administration, HHS.

ACTION: Final rule.

SUMMARY: The Food and Drug Administration (FDA) is revoking its regulation requiring patient labeling for progestational drug products. Patient labeling had been required to inform patients of an increased risk of birth defects reported to be associated with the use of these drugs during the first 4 months of pregnancy. FDA concluded that, based on a review of the scientific data, such labeling for all progestogens is not warranted. In addition, the diversity of drugs that can be described as progestational and the diversity of conditions these drugs may be used to treat make it inappropriate to consider these drugs a single class for labeling purposes. This action is intended to provide consumers with more

appropriate labeling for certain drug products.

EFFECTIVE DATE: November 16, 2000.

FOR FURTHER INFORMATION CONTACT: Diane V. Moore, Center for Drug Evaluation and Research (HFD–580), Food and Drug Administration, 5600 Fishers Lane, Rockville, MD 20857, 301–827–4260.

SUPPLEMENTARY INFORMATION:

I. Background

In the 1970's, there were several reports suggesting ''an association between intrauterine exposure to sex hormone treatment and congenital anomalies, including congenital heart defects and limb reduction defects'' (42 FR 37646, July 22, 1977). Based on these reports, FDA published a proposed rule to require patient labeling for progestational drug products (42 FR 37643, July 22, 1977). The category ''progestational drug products'' included natural progesterone and all synthetic progestins. The regulation was finalized on October 13, 1978 (43 FR 47178), and was codified at § 310.516 (21 CFR 310.516). It required that progestational drug products be dispensed with a patient package insert containing a ''brief discussion of the nature of the risks of birth defects resulting from the use of these drugs during the first 4 months of pregnancy'' (§ 310.516(b)(4)). The regulation applied to any drug product that contains a progestogen, with the exceptions of contraceptives and oral dosage forms labeled solely for the treatment of advanced cancer[1] (310.516(e)(4)).

II. The Final Rule

In the **Federal Register** of April 13, 1999 (64 FR 17985), FDA published a proposed rule to revoke its regulation requiring patient labeling for progestational drug products. FDA concluded that, based on a review of the scientific data, such labeling for all progestogens is not warranted. In addition, the diversity of drugs that can be described as progestational and the diversity of conditions these drugs may be used to treat make it inappropriate to consider these drugs a single class for labeling purposes. For more detailed descriptions of the scientific basis for revoking the rule and the history of the rule's adoption, see the proposed rule (64 FR 17985).

FDA received only three comments on the proposed rule, two from university professors and one from a trade association of pharmacists. Two comments commended FDA's action. The third comment stated that each individual progestational drug product should carry warnings appropriate to that particular product and that a teratogenic warning might be appropriate for a particular progestin. FDA agrees and will require labeling that is appropriate to the dose and indication of each progestational drug product. Thus, FDA is adopting the rule as proposed.

III. Guidance Texts

In 1977, when FDA proposed the rule concerning progestational drug products, it published guidance texts for physician and patient labeling warning of possible heart and limb defects (42 FR 37647 and 37648, July 22, 1977). FDA revised these guidance texts in the **Federal Register** of January 12, 1989 (54 FR 1243). The revised texts deleted the warning about possible congenital heart defects and limb reduction defects and added a warning about an increased risk of certain genital abnormalities. Concurrently with the 1999 proposed rule to revoke § 310.516, FDA published a notice announcing that it intended to revoke the guidance texts for physician and patient labeling (64 FR 18035, April 13, 1999). FDA received no comments concerning the revocation of the guidance texts. Elsewhere in this issue of the **Federal Register**, FDA is publishing a notice revoking those guidance texts.

IV. Analysis of Impacts

FDA has examined the impacts of the final rule under Executive Order 12866, the Regulatory Flexibility Act (5 U.S.C. 601–612), and the Unfunded Mandates Reform Act (Public Law 104–4). Executive Order 12866 directs agencies to assess all costs and benefits of available regulatory alternatives and, when regulation is necessary, to select regulatory approaches that maximize net benefits (including potential economic, environmental, public health and safety, and other advantages; distributive impacts; and equity). Under the Regulatory Flexibility Act, unless an agency certifies that a rule will not have a significant impact on small entities, the agency must analyze regulatory options that would minimize the impact of the rule on small entities. The Unfunded Mandates Reform Act (in section 202) requires that agencies prepare an assessment of anticipated costs and benefits before proposing any rule that may result in an expenditure in any 1 year by State, local, and tribal governments, in the aggregate, or by the private sector, of $100 million or more (adjusted annually for inflation).

The agency has reviewed this final rule and has determined that it is consistent with the regulatory philosophy and principles identified in Executive Order 12866 and these two statutes. With respect to the Regulatory Flexibility Act, the agency certifies that the rule will not have a significant effect on a substantial number of small entities. Because the final rule does not impose any mandates on State, local, or tribal governments or the private sector that will result in a 1-year expenditure of $100 million or more, FDA is not required to perform a cost-benefit analysis under the Unfunded Mandates Reform Act. FDA received no comments on the proposed Analysis of Impacts.

The final rule removes the requirement that sponsors include certain information in the professional labeling of affected drug products. The revised labeling may be filed in the next annual report. The agency has identified 13 sponsors and 16 distinct professional labeling inserts that will need to be changed to comply with this rule. Any professional skills necessary for implementation of this rule should already exist within the sponsor's firm and should not need to be newly acquired. Using a pharmaceutical labeling cost model developed for the agency by its contractor, Eastern Research Group, Inc., the average cost for this labeling change is $1,317 per insert, assuming a compliance period of 1 year. Applying this cost to the 16 professional labeling inserts results in a one-time cost of compliance of $21,000. There will also be an additional minor cost of lost inventory. Of the 13 sponsors affected, fewer than 5 would meet the Small Business Administration's definition of a small entity. No additional burdens are imposed upon manufacturers. Therefore, in accordance with the Regulatory Flexibility Act, FDA certifies that this rule will not have a significant economic impact on a substantial number of small entities.

V. Paperwork Reduction Act of 1995

FDA concludes that this final rule contains no collections of information. The final rule removes the requirement that certain information be included in the labeling of affected drug products. The revised labeling may be filed in the next annual report, which is already required under FDA regulations and is already approved by the Office of Management and Budget (OMB) as a collection of information (OMB control no. 0910–0001). Therefore, clearance by

[1] The original regulation exempted contraceptives, which were required to comply with the labeling requirements of 21 CFR 310.501. In 1981, the regulation was amended to exempt advanced cancer drugs (46 53656, October 30, 1981).

OMB under the Paperwork Reduction Act of 1995 is not required.

VI. Environmental Impact

The agency has determined under 21 CFR 25.30(h) that this action is of a class of actions that does not individually or cumulatively have a significant effect on the human environment. Therefore, neither an environmental assessment nor an environmental impact statement is required.

VII. Effective Date

This final rule becomes effective 1 year after its date of publication in the **Federal Register**.

List of Subjects in 21 CFR Part 310

Administrative practice and procedure, Drugs, Labeling, Medical devices, Reporting and recordkeeping requirements.

Therefore, under the Federal Food, Drug, and Cosmetic Act and the Public Health Service Act, and under the authority delegated to the Commissioner of Food and Drugs, 21 CFR part 310 is amended as follows:

PART 310—NEW DRUGS

1. The authority citation for 21 CFR part 310 continues to read as follows:

Authority: 21 U.S.C. 321, 331, 351, 352, 353, 355, 360b–360f, 360j, 361(a), 371, 374, 375, 379e; 42 U.S.C. 216, 241, 242(a), 262, 263b–263n.

§ 310.516 [Removed]

2. Section 310.516 *Progestational drug products; labeling directed to the patient* is removed.

Dated: November 4, 1999.

Margaret M. Dotzel,

Acting Associate Commissioner for Policy.

[FR Doc. 99–29854 Filed 11–15–99; 8:45 am]

BILLING CODE 4160–01–F

DEPARTMENT OF THE TREASURY

31 CFR Part 18

Agency Organization: Vacancy, Disability, and Absence

AGENCY: Office of the Secretary of the Treasury, Department of the Treasury.

ACTION: Final rule.

SUMMARY: This final rule establishes regulations concerning the functions and duties of certain offices within the Department of the Treasury in case of absence, disability, or vacancy. The rule is consistent with sections 3345 through 3349d of title 5, United States Code, as amended by the Federal Vacancies Reform Act of 1998. Currently codified at 31 CFR Part 18 are temporary regulations relating to the tax treatment of the Conrail public sale. Although the temporary regulations are no longer needed and are being replaced by the regulation in this document, the temporary regulations continue to apply to transactions that occurred while they were effective.

EFFECTIVE DATE: November 16, 1999.

FOR FURTHER INFORMATION CONTACT: Randolph B. Sim, Attorney Adviser, Office of the Assistant General Counsel (General Law and Ethics), Department of the Treasury, Washington, DC 20220, (202) 622–0450 (not a toll-free call).

SUPPLEMENTARY INFORMATION: Section 3345 of title 5, United States Code, provides that when an officer whose appointment is required to be made by the President, by and with the advice and consent of the Senate (''PAS Office''), dies, resigns, or is otherwise unable to perform the functions and duties of the office, the first assistant to the office of such officer (''First Assistant'') may perform temporarily the functions and duties of the PAS Office. The rule authorizes the Secretary to establish for each office within the Department of the Treasury (including its bureaus) to which appointment is required to be made by the President with the advice and consent of the Senate a First Assistant within the meaning of 5 U.S.C. 3345–3349d. If there is a principal deputy to the PAS Office, that official is the First Assistant. If there is no position with the title ''principal deputy,'' but there is one, and only one, deputy position to the PAS Office (which deputy may have a different title, such as Deputy Director), that deputy is the First Assistant. If there is no position which qualifies as First Assistant under these tests, the Secretary may designate a First Assistant. Consistent with 5 U.S.C. 3347, the rule does not apply to certain specified offices or if a statute prescribes another means for authorizing an officer or employee to perform the functions and duties of a PAS Office temporarily in an acting capacity.

This rule shall not affect the filing of vacancies that occurred prior to the effective date of the Federal Vacancies Reform Act of 1998.

Because this rule relates to agency management and personnel, it is not subject to notice and public procedure or to a delayed effective date pursuant to 5 U.S.C. 553(a)(2). Because no notice of proposed rulemaking is required, the provisions of the Regulatory Flexibility Act (5 U.S.C. 601 *et seq.*) do not apply. This document is not a significant regulatory action for purposes of Executive Order 12866.

List of Subjects in 31 CFR Part 18

Government employees, Organization and functions (Government agencies).

Accordingly, part 18 of title 31 of the Code of Federal Regulations is revised to read as follows:

PART 18—OFFICIALS DESIGNATED TO PERFORM THE FUNCTIONS AND DUTIES OF CERTAIN OFFICES IN CASE OF ABSENCE, DISABILITY, OR VACANCY

Sec.
18.1 Designation of First Assistants.
18.2 Exceptions.

Authority: 5 U.S.C. 301; 31 U.S.C. 321.

§ 18.1 Designation of First Assistants.

Except as provided in § 18.2, every office within the Department of the Treasury (including its bureaus) to which appointment is required to be made by the President with the advice and consent of the Senate (''PAS Office'') may have a First Assistant within the meaning of 5 U.S.C. 3345–3349d.

(a) Where there is a position of principal deputy to the PAS Office, the principal deputy shall be the First Assistant.

(b) Where there is only one deputy position to the PAS Office, the official in that position shall be the First Assistant.

(c) Where neither paragraph (a) nor (b) of this section is applicable to the PAS Office, the Secretary of the Treasury may designate in writing the First Assistant.

§ 18.2 Exceptions.

(a) Section 18.1 shall not apply:

(1) When a statute which meets the requirements of 5 U.S.C. 3347(a) prescribes another means for authorizing an officer or employee to perform the functions and duties of a PAS Office in the Department temporarily in an acting capacity; and

(2) To the office of a member of the Internal Revenue Service Oversight Board.

(b) The Inspector General of the Department of the Treasury shall determine any arrangements for the temporary performance of the functions and duties of the Inspector General of the Department of the Treasury when that office is vacant.

(c) The Treasury Inspector General for Tax Administration shall determine any arrangements for the temporary performance of the functions and duties of the Treasury Inspector General for

Tax Administration when that office is vacant.

Dated: November 4, 1999.

Lawrence H. Summers,

Secretary of the Treasury.

[FR Doc. 99–29658 Filed 11–15–99; 8:45 am]

BILLING CODE 4810–25–M

NATIONAL ARCHIVES AND RECORDS ADMINISTRATION

Information Security Oversight Office

32 CFR Part 2001

[Directive No. 1; Appendix A]

[RIN 3095–AA92]

Information Security Oversight Office; Classified National Security Information; Correction

AGENCY: Information Security Oversight Office (ISOO), National Archives and Records Administration (NARA).

ACTION: Final rule; correction.

SUMMARY: The Information Security Oversight Office, NARA, published in the **Federal Register** of September 13, 1999, a final rule establishing a uniform referral standard that Federal agencies must use for multi-agency declassification issues. Inadvertently, we published incorrect text for the definition of the term ''Exempted.'' This document provides the correct text.

DATES: Effective on October 13, 1999.

FOR FURTHER INFORMATION CONTACT: Steven Garfinkel, Director, ISOO. Telephone: 202–219–5250.

SUPPLEMENTARY INFORMATION: ISOO published a final rule document in the **Federal Register** of September 13, 1999, (64 FR 49388) adding a new § 2001.55 to Subpart E. The definition of ''Exempted'' incorrectly repeated the definition for another term. This correction provides the correct definition for ''Exempted.''

In the document FR 99–23800 published on September 13, 1999, (99 FR 49388) make the following correction. On page 49389, in the second column, in § 2001.55, paragraph (d), remove the definition of ''Exempted'' and add in its place:

§ 2001.55 Document referral.

* * * * *

(d) * * *

''*Exempted* means nomenclature and marking indicating information has been determined to fall within an enumerated exemption from automatic declassification under E.O. 12958.''

* * * * *

Dated: November 9, 1999.

John W. Carlin,

Archivist of the United States.

[FR Doc. 99–29863 Filed 11–15–99; 8:45 am]

BILLING CODE 7515–01–P

DEPARTMENT OF TRANSPORTATION

Coast Guard

33 CFR Part 117

[CGD01–99–076]

RIN 2115–AE47

Drawbridge Operation Regulations: Hackensack River, Passaic River, NJ

AGENCY: Coast Guard, DOT.

ACTION: Final rule.

SUMMARY: The Coast Guard is changing the drawbridge operation regulations governing the Harold J. Dillard (Court Street) Bridge, at mile 16.2, at Hackensack, across the Hackensack River, the Avondale Bridge, at mile 10.7, at Lyndhurst, across the Passaic River, and the Douglas O. Mead (Union Avenue) Bridge, at mile 13.2, at Rutherford, across the Passaic River, in New Jersey. The bridge owner asked the Coast Guard to change the regulations for these bridges to require a four-hour advance notice for openings at all times because there have been few requests to open these bridges since 1994. This final rule is expected to relieve the bridge owner of the burden of crewing the bridges at all times and still meet the needs of navigation.

DATES: This final rule is effective December 16, 1999.

ADDRESSES: Documents as indicated in this preamble are available for inspection or copying at the First Coast Guard District Office, 408 Atlantic Avenue, Boston, Massachusetts 02110, 7 a.m. to 3 p.m., Monday through Friday, except Federal holidays. The telephone number is (617) 223–8364.

FOR FURTHER INFORMATION CONTACT: John W. McDonald, Project Officer, First Coast Guard District, (617) 223–8364.

SUPPLEMENTARY INFORMATION:

Regulatory History

On August 13, 1999, the Coast Guard published a notice of proposed rulemaking entitled Drawbridge Operation Regulations; Hackensack River and Passaic River, New Jersey, in the **Federal Register** (64 FR 44148). The Coast Guard received no comments in response to the notice of proposed rulemaking. No public hearing was requested and none was held.

Background

The Harold J. Dillard (Court Street) Bridge, mile 16.2, across the Hackensack River in Hackensack, New Jersey, has a vertical clearance of 3 feet at mean high water and 8 feet at mean low water, the Douglas O. Mead (Union Avenue) Bridge, mile 13.2, across the Passaic River, in Rutherford, New Jersey, has a vertical clearance of 13 feet at mean high water and 18 feet at mean low water, the Avondale Bridge, mile 10.7, across the Passaic River in Lyndhurst, New Jersey, has a vertical clearance of 7 feet at mean high water and 12 feet at mean low water.

The existing operating regulations for the Harold J. Dillard (Court Street) Bridge listed at § 117.723(g) require the bridge to open on signal from 7 a.m. to 11 p.m. From 11 p.m. to 7 a.m., and at all times on weekends and Federal holidays, the draw shall open on signal if at least eight hours notice is given. The existing operating regulations for the Douglas O. Mead (Union Avenue) Bridge listed at § 117.739(o) require the bridge to open on signal; except that, from 4 p.m. to 8 a.m., the draw shall open if at least eight hours notice is given. The existing operating regulations for the Avondale Bridge listed at 117.739(l) require the bridge to open on signal; except that, notice must be given before 2:30 a.m. for openings between 3 a.m. and 8:30 a.m. and before 2:30 p.m. for openings between 4:30 p.m. and 7 p.m.

The bridge owner, the County of Bergen, has asked the Coast Guard to change the regulations for these bridges to require a four-hour advance notice for openings at all times.

The bridge log data indicates that the Harold J. Dillard (Court Street) Bridge and Douglas O. Mead (Union Avenue) Bridge have not received a request to open since 1994. The Avondale Bridge had 8 openings in 1996, 4 openings in 1997, 2 openings in 1998, and no openings thus far in 1999.

Discussion of Comments and Changes

The Coast Guard received no comments in response to the notice of proposed rulemaking and no changes have been made to this final rule.

Regulatory Evaluation

This final rule is not a significant regulatory action under section 3(f) of Executive Order 12866 and does not require an assessment of potential costs and benefits under section 6(a)(3) of that Order. It has not been reviewed by the Office of Management and Budget under that Order. It is not significant under the regulatory policies and procedures of

the Department of Transportation (DOT) (44 FR 11040; February 26, 1979). The Coast Guard expects the economic impact of this final rule to be so minimal that a full Regulatory Evaluation under paragraph 10e of the regulatory policies and procedures of DOT is unnecessary. This conclusion is based on the fact that these bridges have had few requests to open since 1994. Mariners will still be able transit the waterway provided they give a four-hour notice.

Small Entities

Under the Regulatory Flexibility Act (5 U.S.C. 601 *et seq.*), the Coast Guard considered whether this final rule will have a significant economic impact on a substantial number of small entities. ''Small entities'' include small businesses, not-for-profit organizations that are independently owned and operated and are not dominant in their fields, and governmental jurisdictions with populations less than 50,000. Therefore, for reasons discussed in the Regulatory Evaluation section above, the Coast Guard certifies under section 605(b) of the Regulatory Flexibility Act (5 U.S.C. 601 *et seq.*) that this final rule will not have a significant economic impact on a substantial number of small entities.

Collection of Information

This final rule does not provide for a collection of information under the Paperwork Reduction Act of 1995 (44 U.S.C. 3501 *et seq.*).

Federalism

The Coast Guard has analyzed this final rule in accordance with the principles and criteria contained in Executive Order 13132 and has determined that this final rule does not have federalism implications under that Order.

Environment

The Coast Guard considered the environmental impact of this final rule and concluded that, under Section 2.B.2., Figure 2–1, paragraph (32)(e), of Commandant Instruction M16475.1C, this final rule is categorically excluded from further environmental documentation because promulgation of changes to drawbridge regulations have been found to not have a significant effect on the environment. A written ''Categorical Exclusion Determination'' is not required for this final rule.

List of Subjects in 33 CFR Part 117

Bridges.

Regulations

For the reasons set out in the preamble, the Coast Guard amends 33 CFR part 117 as follows:

PART 117—DRAWBRIDGE OPERATION REGULATIONS

1. The authority citation for part 117 continues to read as follows:

Authority: 33 U.S.C. 499; 49 CFR 1.46; 33 CFR 1.05–1(g); section 117.255 also issued under the authority of Pub. L. 102–587, 106 Stat. 5039.

2. Section 117.723(g) is revised to read as follows:

§ 117.723 Hackensack River.

* * * * *

(g) The draw of the Harold J. Dillard Memorial (Court Street) Bridge, mile 16.2, at Hackensack, shall open on signal if at least four hours notice is given.

* * * * *

3. Section 117.39 (l) and (o) are revised to read as follows:

§ 117.739 Passaic River.

* * * * *

(l) The draw of the Avondale Bridge, mile 10.7, at Lyndhurst, shall open on signal if at least four hours notice is given.

* * * * *

(o) The draw of the Douglas O. Mead (Union Avenue) Bridge, mile 13.2, shall open on signal if at least four hours notice is given.

* * * * *

Dated: October 28, 1999.

Robert F. Duncan,

Captain, U.S. Coast Guard, Acting Commander, First Coast Guard District.

[FR Doc. 99–29833 Filed 11–15–99; 8:45 am]

BILLING CODE 4910–15–U

ENVIRONMENTAL PROTECTION AGENCY

40 CFR Part 62

[NE 086–1086a; FRL–6473–8]

Approval and Promulgation of State Plans for Designated Facilities and Pollutants; Control of Emissions From Hospital/Medical/Infectious Waste Incinerators (HMIWI); State of Nebraska

AGENCY: Environmental Protection Agency (EPA).

ACTION: Direct final rule.

SUMMARY: EPA is approving the state of Nebraska's section 111(d) plan for controlling emissions from existing HMIWIs. The plan was submitted to fulfill the requirements of sections 111 and 129 of the Clean Air Act (CAA). The state plan establishes emission limits and controls for sources constructed on or before June 20, 1996.

DATES: This direct final rule is effective on January 18, 2000 without further notice, unless EPA receives adverse comment by December 16, 1999. If adverse comment is received, EPA will publish a timely withdrawal of the direct final rule in the **Federal Register** and inform the public that the rule will not take effect.

ADDRESSES: All comments should be addressed to: Wayne Kaiser, Air Planning and Development Branch, 901 North 5th Street, Kansas City, Kansas 66101.

Copies of the state submittal are available at the following addresses for inspection during normal business hours: Environmental Protection Agency, Air Planning and Development Branch, 901 North 5th Street, Kansas City, Kansas 66101; and the Environmental Protection Agency, Air and Radiation Docket and Information Center, Air Docket (6102), 401 M Street, SW, Washington, D.C. 20460.

FOR FURTHER INFORMATION CONTACT: Wayne Kaiser at (913) 551–7603.

SUPPLEMENTARY INFORMATION: Throughout this document whenever ''we, us, or our'' is used, we mean EPA.

Information regarding this action is presented in the following order:

What are the requirements of section 129 of the CAA?
What is a section 111(d) state plan?
What is Subpart Ce?
What are the requirements for the HMIWI state plan? What is contained in the Nebraska state plan?
What are the approval criteria for the state plan?

What Are the Requirements of Section 129 of the CAA?

Section 129 of the CAA Amendments of 1990 requires us to set air emission standards and emission guidelines (EG) under the authority of section 111 of the CAA to reduce pollution from incinerators that burn solid waste. Incinerators that burn medical waste are classified as solid waste incinerators and therefore must be regulated.

What Is a Section 111(d) State Plan?

Section 111(d) of the CAA, ''Standards of Performance for New Stationary Sources,'' authorizes us to set air emissions standards for certain categories of sources. These standards are called new source performance standards (NSPS). When an NSPS is promulgated for new sources, we also

publish an EG applicable to the control of the same pollutant from existing (designated) facilities. States with designated facilities must then develop a state plan to adopt the EG into its body of regulations and submit it to us for approval. The state plan is called a 111(d) plan.

What Is Subpart Ce?

We issued regulations to reduce air pollution from incinerators that are used to burn hospital waste and/or medical/infectious waste. The NSPS at 40 CFR Part 60, Subpart Ec, and the EG, Subpart Ce, were promulgated by us on September 15, 1997 (62 FR 48374). These rules apply to new and existing incinerators used by hospitals and health care facilities, as well as to incinerators used by commercial waste disposal companies to burn hospital waste and/or medical/infectious waste. The EG applies to existing HMIWIs that commenced construction on or before June 20, 1996.

The Subpart Ce EG is not a direct Federal regulation but is a ''guideline'' for states to use in regulating existing HMIWIs. The EG requires states to submit for our approval a section 111(d) state plan containing air emission regulations and compliance schedules for existing HMIWIs.

What Are the Requirements for the HMIWI State Plan?

A section 111(d) state plan submittal must meet the requirements of 40 CFR Part 60, Subpart B, sections 60.23 through 60.26, and 40 CFR Part Ce. Subpart B addresses public participation, legal authority, emission standards and other emission limitations, compliance schedules, emission inventories, source surveillance, and compliance assurance and enforcement requirements. The technical requirements for existing HMIWI sources are contained in Subpart Ce. A state will generally address the HMIWI technical requirements by adopting by reference Subpart Ce. The section 111(d) state plan is required to be submitted within one year of the EG promulgation date, i.e., by September 15, 1998.

Prior to submittal to us, the state must make available to the public the state plan and provide opportunity for public comment. If a state fails to have an approvable plan in place by September 15, 1999, sources will be subject to a Federal plan on that date.

What Is Contained in the Nebraska State Plan?

The state of Nebraska submitted its section 111(d) state plan to us for approval on July 30, 1999. The state adopted the EG requirements into Nebraska Department of Environmental Quality rules at Title 129, Chapter 18—New Source Performance Standards and Emission Limits For Existing Sources, effective December 15, 1998. The section 111(d) state plan contains:

1. A demonstration of the state's legal authority to implement the section 111(d) state plan.

2. State Rule Title 129, Chapter 18—New Source Performance Standards and Emission Limits For Existing Sources, as the enforceable mechanism.

3. An inventory of sources in Appendix B.

4. An emissions inventory in Appendix C.

5. Emission limits, as protective as the EG, that are contained in Chapter 18, 004.02.

6. A final compliance date of September 15, 2002.

7. Testing, monitoring, and inspection requirements that are contained in Chapter 18, 004.02.

8. Reporting and recordkeeping requirements for the designated facilities that are contained in Chapter 18, 004.02.

9. Operator training and qualification requirements that are contained in Chapter 18, 004.02.

10. Requirements for the development of waste management plans that are contained in Chapter 18, 004.02.

11. A record of the public notice and hearing requirements that is contained in Appendix D.

12. Provisions for progress reports to EPA that are contained in Section M.

13. Title V permit application due date requirements that are contained in Chapter 18, 004.02A.

14. A final compliance date of September 15, 2002.

What Are the Approval Criteria for the State Plan?

The state plan was reviewed for approval against the following criteria: 40 CFR 60.23 through 60.26, Subpart B, ''Adoption and Submittal of State Plans for Designated Facilities,'' and 40 CFR 60, 60.30e through 60.39e, Subpart Ce, ''Emission Guidelines and Compliance Times for Hospital/Medical/Infectious Waste Incinerators.'' A detailed discussion of our evaluation of the state plan is included in our technical support document (TSD) located in the official file for this action and available from the EPA contact listed above. The state plan meets all of the applicable approval criteria.

Conclusion

Final Action

Based on the rationale discussed above and in further detail in the TSD associated with this action, EPA is approving Nebraska's July 30, 1999, section 111(d) state plan for the control of HMIWI emissions, except for those facilities located in Indian country. Any facilities located in Indian country will be subject to a Federal plan. In Nebraska there are no known HMIWIs in Indian country.

EPA is publishing this rule without prior proposal because the Agency views this as a noncontroversial submittal and anticipates no adverse comments. However, in the proposed rules section of this **Federal Register** publication, EPA is publishing a separate document that will serve as the proposal to approve the SIP revision should adverse comments be filed. This rule will be effective January 18, 2000 without further notice unless the Agency receives adverse comments by December 16, 1999.

If EPA receives such comments, then EPA will publish a document withdrawing the final rule and informing the public that the rule will not take effect. All public comments received will then be addressed in a subsequent final rule based on the proposed rule. EPA will not institute a second comment period. Parties interested in commenting should do so at this time. If no such comments are received, the public is advised that this rule will be effective on January 18, 2000 and no further action will be taken on the proposed rule.

Administrative Requirements

A. Executive Order (E.O.) 12866

The Office of Management and Budget (OMB) has exempted this regulatory action from E.O. 12866, entitled ''Regulatory Planning and Review.''

B. E.O. On Federalism

Under E.O. 12875, EPA may not issue a regulation that is not required by statute and that creates a mandate upon a state, local, or tribal government, unless the Federal Government provides the funds necessary to pay the direct compliance costs incurred by those governments. If the mandate is unfunded, EPA must provide to the OMB a description of the extent of EPA's prior consultation with representatives of affected state, local, and tribal governments, the nature of their concerns, copies of written communications from the governments, and a statement supporting the need to

issue the regulation. In addition, E.O. 12875 requires EPA to develop an effective process permitting elected officials and other representatives of state, local, and tribal governments ''to provide meaningful and timely input in the development of regulatory proposals containing significant unfunded mandates.'' Today's rule does not create a mandate on state, local, or tribal governments. The rule does not impose any enforceable duties on these entities. Accordingly, the requirements of section 1(a) of E.O. 12875 do not apply to this rule.

On August 4, 1999, President Clinton issued a new E.O. on federalism, E.O. 13132 [64 FR 43255 (August 10, 1999)], which will take effect on November 2, 1999. In the interim, the current E.O. 12612 [52 FR 41685 (October 30, 1987)] on federalism still applies. This rule will not have a substantial direct effect on states, on the relationship between the national government and the states, or on the distribution of power and responsibilities among the various levels of government, as specified in E.O. 12612, because it merely approves, at the Federal level, preexisting state requirements. The rule affects only one state, and does not alter the relationship or the distribution of power and responsibilities established in the CAA.

C. E.O. 13045

Protection of Children from Environmental Health Risks and Safety Risks (62 FR 19885, April 23, 1997) applies to any rule that: (1) Is determined to be ''economically significant'' as defined under E.O. 12866, and (2) concerns an environmental health or safety risk that EPA has reason to believe may have a disproportionate effect on children. If the regulatory action meets both criteria, the Agency must evaluate the environmental health or safety effects of the planned rule on children, and explain why the planned regulation is preferable to other potentially effective and reasonably feasible alternatives considered by the Agency.

This rule is not subject to E.O. 13045 because it is not an economically significant regulatory action as defined by E.O. 12866, and it does not establish a further health or risk-based standard.

D. E.O. 13084

Under E.O. 13084, Consultation and Coordination with Indian Tribal Governments, EPA may not issue a regulation that is not required by statute, that significantly or uniquely affects the communities of Indian tribal governments, and that imposes substantial direct compliance costs on those communities, unless the Federal Government provides the funds necessary to pay the direct compliance costs incurred by the tribal governments, or EPA consults with those governments. If EPA complies by consulting, E.O. 13084 requires EPA to provide to the OMB, in a separately identified section of the preamble to the rule, a description of the extent of EPA's prior consultation with representatives of affected tribal governments, a summary of the nature of their concerns, and a statement supporting the need to issue the regulation. In addition, E.O. 13084 requires EPA to develop an effective process permitting elected officials and other representatives of Indian tribal governments ''to provide meaningful and timely input in the development of regulatory policies on matters that significantly or uniquely affect their communities.''

Today's rule does not significantly or uniquely affect the communities of Indian tribal governments. This action does not involve or impose any requirements that affect Indian tribes. Accordingly, the requirements of section 3(b) of E.O. 13084 do not apply to this rule.

E. Regulatory Flexibility Act (RFA)

Under the RFA, 5 U.S.C. 600 *et seq.*, EPA must prepare a regulatory flexibility analysis assessing the impact of any proposed or final rule on small entities (5 U.S.C. 603 and 604). Alternatively, EPA may certify that the rule will not have a significant impact on a substantial number of small entities. Small entities include small businesses, small not-for-profit enterprises, and government entities with jurisdiction over populations of less than 50,000.

State plan approvals under section 111 of the CAA do not create any new requirements but simply approve requirements that the state is already imposing. In addition, this final rule merely codifies Federal approvals of state requirements which have already occurred. Therefore, because the Federal state plan approval does not create any new requirements, I certify that this action will not have a significant economic impact on a substantial number of small entities.

F. Unfunded Mandates

Under Section 202 of the Unfunded Mandates Reform Act of 1995 (''Unfunded Mandates Act''), signed into law on March 22, 1995, EPA must prepare a budgetary impact statement to accompany any proposed or final rule that includes a Federal mandate that may result in estimated annual costs to state, local, or tribal governments in the aggregate, or to the private sector, of $100 million or more. Under Section 205, EPA must select the most cost-effective and least burdensome alternative that achieves the objectives of the rule and is consistent with statutory requirements. Section 203 requires EPA to establish a plan for informing and advising any small governments that may be significantly or uniquely impacted by the rule.

EPA has determined that the approval action promulgated does not include a Federal mandate that may result in estimated annual costs of $100 million or more to either state, local, or tribal governments in the aggregate, or to the private sector. This Federal action approves preexisting requirements under state law, and imposes no new requirements. Accordingly, no additional costs to state, local, or tribal governments, or to the private sector, result from this action.

G. Submission to Congress and the Comptroller General

The Congressional Review Act, 5 U.S.C. 801 *et seq.*, as added by the Small Business Regulatory Enforcement Fairness Act of 1996, generally provides that before a rule may take effect, the agency promulgating the rule must submit a rule report, which includes a copy of the rule, to each House of the Congress and to the Comptroller General of the United States. EPA will submit a report containing this rule and other required information to the United States Senate, the United States House of Representatives, and the United States Comptroller General prior to publication of the rule in the **Federal Register**. This rule is not a ''major rule'' as defined by 5 U.S.C. 804(2).

H. Petitions for Judicial Review

Under section 307(b)(1) of the CAA, petitions for judicial review of this action must be filed in the United States Court of Appeals for the appropriate circuit by January 18, 2000. Filing a petition for reconsideration by the Administrator of this final rule does not affect the finality of this rule for the purposes of judicial review, nor does it extend the time within which a petition for judicial review may be filed, and shall not postpone the effectiveness of such rule or action. This action may not be challenged later in proceedings to enforce its requirements. [See section 307(b)(2).]

List of Subjects 40 CFR Part 62

Environmental protection, Air pollution control, Intergovernmental

relations, Reporting and recordkeeping requirements.

Dated: October 20, 1999.

Dennis Grams,

Regional Administrator, Region VII.

Chapter I, Title 40 of the Code of Federal Regulations is amended as follows:

PART 62—[AMENDED]

1. The authority citation for Part 62 continues to read as follows:

Authority: 42 U.S.C. 7401 *et seq.*

Subpart CC—Nebraska

2. Subpart CC is amended by adding § 62.6914 and an undesignated center heading to read as follows:

Air Emissions From Existing Hospital/Medical/Infectious Waste Incinerators

§ 62.6914 Identification of plan.

(a) Identification of plan. Nebraska plan for the control of air emissions from hospital/medical/infectious waste incinerators submitted by the Nebraska Department of Environmental Quality on July 30, 1999.

(b) Identification of sources. The plan applies to existing hospital/medical/infectious waste incinerators constructed on or before June 20, 1996.

(c) Effective date. The effective date of the plan is January 18, 2000.

[FR Doc. 99–29582 Filed 11–15–99; 8:45 am]

BILLING CODE 6560–50–P

ENVIRONMENTAL PROTECTION AGENCY

40 CFR Part 62

[Docket No. VT–016–1220a; FRL–6474–1]

Approval and Promulgation of State Plans For Designated Facilities and Pollutants: Vermont; Negative Declaration

AGENCY: Environmental Protection Agency (EPA).

ACTION: Direct final rule.

SUMMARY: EPA publishes regulations under Sections 111(d) and 129 of the Clean Air Act requiring states to submit plans to EPA. These plans show how states intend to control the emissions of designated pollutants from designated facilities. 40 CFR 62.06 provides that when no such designated facilities exist within a state's boundaries, the affected state may submit a letter of ''negative declaration'' instead of a control plan. On April 16, 1999, the state of Vermont submitted a negative declaration adequately certifying that there are no hospital/medical/infectious waste incinerators (HMIWIs) located within its boundaries. EPA is approving Vermont's negative declaration.

DATES: This direct final rule is effective on January 18, 2000 without further notice unless EPA receives significant, material and adverse comment by December 16, 1999. If EPA receives adverse comment, we will publish a timely withdrawal of the direct final rule in the **Federal Register** and inform the public that the rule will not take effect.

ADDRESSES: You should address your written comments to: Mr. Brian Hennessey, Acting Chief, Air Permits Unit, Office of Ecosystem Protection, U.S. EPA, One Congress Street, Suite 1100 (CAP), Boston, MA 02114–2023.

Copies of the documents relevant to this action are available for public inspection during normal business hours, by appointment at the Office of Ecosystem Protection, U.S. Environmental Protection Agency, Region I, One Congress Street, 11th floor, Boston, MA.

FOR FURTHER INFORMATION CONTACT: John J. Courcier, (617) 918–1659.

SUPPLEMENTARY INFORMATION:

Table of Contents

I. What action Is EPA taking today?
II. What is the origin of the requirements?
III. When did the HMIWI requirements first become known?
IV. When did Vermont submit its negative declaration?
V. Administrative Requirements

I. What Action Is EPA Taking Today?

EPA is approving the negative declaration of air emissions from HMIWIs submitted by the state of Vermont.

EPA is publishing this negative declaration without prior proposal because the Agency views this as a noncontroversial amendment and anticipates no adverse comments. However, in the proposed rules section of this **Federal Register**, EPA is publishing a separate document that will serve as the proposal to approve this negative declaration should relevant adverse comments be filed. If EPA receives no significant, material, or adverse comment by December 16, 1999, this action will be effective January 18, 2000.

If EPA receives significant, material, and adverse comments by the above date, we will withdraw this action before the effective date by publishing a subsequent document in the **Federal Register** that will withdraw this final action. EPA will address all public comments received in a subsequent final rule based on the parallel proposed rule published in today's **Federal Register**. EPA will not institute a second comment period on this action. Any parties interested in commenting on this action should do so at this time. If EPA receives no comments, this action will be effective January 18, 2000.

II. What Is the Origin of the Requirements?

Under Section 111(d) of the Clean Air Act, EPA published regulations at 40 CFR Part 60, Subpart B which require states to submit plans to control emissions of designated pollutants from designated facilities. In the event that a state does not have a particular designated facility located within its boundaries, EPA requires that a negative declaration be submitted in lieu of a control plan.

III. When Did the Requirements First Become Known?

On June 26, 1996 (61 FR 31736), EPA proposed HMIWIs as designated facilities. EPA specified particulate matter, opacity, sulfur dioxide, hydrogen chloride, oxides of nitrogen, carbon monoxide, lead, cadmium, mercury, and dioxins and dibenzofurans as designated pollutants by proposing emission guidelines for existing HMIWIs. These guidelines were published in final form on September 15, 1997 (62 FR 48348).

IV. When Did Vermont Submit Its Negative Declaration?

On April 16, 1999, the Vermont Agency of Natural Resources (ANR) submitted a letter certifying that there are no existing HMIWIs subject to 40 CFR Part 60, Subpart B. EPA is publishing this negative declaration at 40 CFR 62.11475.

V. Administrative Requirements

A. Executive Order 12866

The Office of Management and Budget (OMB) has exempted this regulatory action from Executive Order (E.O.) 12866, entitled ''Regulatory Planning and Review.''

B. Executive Orders on Federalism

Under E.O. 12875, EPA may not issue a regulation that is not required by statute and that creates a mandate upon a state, local, or tribal government, unless the Federal government provides the funds necessary to pay the direct compliance costs incurred by those governments, or EPA consults with those governments. If EPA complies by consulting, Executive Order 12875 requires EPA to provide to the Office of

Management and Budget a description of the extent of EPA's prior consultation with representatives of affected state, local, and tribal governments, the nature of their concerns, copies of written communications from the governments, and a statement supporting the need to issue the regulation. In addition, E.O. 12875 requires EPA to develop an effective process permitting elected officials and other representatives of state, local, and tribal governments ''to provide meaningful and timely input in the development of regulatory proposals containing significant unfunded mandates.''

Today's rule does not create a mandate on state, local or tribal governments. The rule does not impose any enforceable duties on these entities. Accordingly, the requirements of section 1(a) of E.O. 12875 do not apply to this rule.

On August 4, 1999, President Clinton issued a new executive order on federalism, Executive Order 13132, (64 FR 43255 (August 10, 1999)), which will take effect on November 2, 1999. In the interim, the current Executive Order 12612, (52 FR 41685 (October 30, 1987)) on federalism still applies. This rule will not have a substantial direct effect on Vermont, on the relationship between the national government and the States, or on the distribution of power and responsibilities among the various levels of government, as specified in Executive Order 12612. The rule affects only a few States, and does not alter the relationship or the distribution of power and responsibilities established in the Clean Air Act.

C. Executive Order 13045

Protection of Children from Environmental Health Risks and Safety Risks (62 FR 19885, April 23, 1997), applies to any rule that: (1) is determined to be ''economically significant'' as defined under E.O. 12866, and (2) concerns an environmental health or safety risk that EPA has reason to believe may have a disproportionate effect on children. If the regulatory action meets both criteria, the Agency must evaluate the environmental health or safety effects of the planned rule on children, and explain why the planned regulation is preferable to other potentially effective and reasonably feasible alternatives considered by the Agency.

This rule is not subject to E.O. 13045 because it does not involve decisions intended to mitigate environmental health or safety risks that EPA has reason to believe may have a disproportionate effect on children.

D. Executive Order 13084

Under E.O. 13084, EPA may not issue a regulation that is not required by statute, that significantly affects or uniquely affects the communities of Indian tribal governments, and that imposes substantial direct compliance costs on those communities, unless the Federal government provides the funds necessary to pay the direct compliance costs incurred by the tribal governments. If the mandate is unfunded, EPA must provide to the Office of Management and Budget, in a separately identified section of the preamble to the rule, a description of the extent of EPA's prior consultation with representatives of affected tribal governments, a summary of the nature of their concerns, and a statement supporting the need to issue the regulation. In addition, E.O. 13084 requires EPA to develop an effective process permitting elected and other representatives of Indian tribal governments ''to provide meaningful and timely input in the development of regulatory policies on matters that significantly or uniquely affect their communities.''

Today's action does not create any new requirements on any entity affected by this State Plan. Thus, the action will not significantly or uniquely affect the communities of Indian tribal governments. Accordingly, the requirements of section 3(b) of E.O. 13084 do not apply to this rule.

E. Regulatory Flexibility Act

Under the Regulatory Flexibility Act, 5 U.S.C. 600 *et seq.*, EPA must prepare a regulatory flexibility analysis assessing the impact of any proposed or final rule on small entities. 5 U.S.C. 603 and 604. Alternatively, EPA may certify that the rule will not have a significant impact on a substantial number of small entities. Small entities include small businesses, small not-for-profit enterprises, and government entities with jurisdiction over populations of less than 50,000.

Negative declaration approvals under section 111(d) of the Clean Air Act do not create any new requirements on any entity affected by this rule, including small entities. Furthermore, in developing the HMIWI emission guidelines and standards, EPA prepared a written statement pursuant to the Regulatory Flexibility Act which it published in the 1997 promulgation notice (*see* 62 FR 48348). In accordance with EPA's determination in issuing the 1997 HMIWI emission guidelines, this negative declaration approval does not include any new requirements that will have a significant economic impact on a substantial number of small entities.

Therefore, because this approval does not impose any new requirements and pursuant to section 605(b) of the Regulatory Flexibility Act, the Regional Administrator certifies that this rule will not have a significant impact on a substantial number of small entities.

F. Unfunded Mandates

Under Section 202 of the Unfunded Mandates Reform Act of 1995 (''Unfunded Mandates Act''), signed into law on March 22, 1995, EPA must prepare a budgetary impact statement to accompany any proposed or final rule that includes a Federal mandate that may result in estimated costs to State, local, or tribal governments in the aggregate, or to the private sector, of $100 million or more. Under Section 205, EPA must select the most cost-effective and least burdensome alternative that achieves the objectives of the rule and is consistent with statutory requirements. Section 203 requires EPA to establish a plan for informing and advising any small governments that may be significantly or uniquely impacted on by the rule.

EPA has determined that this approval action does not include a Federal mandate that may result in estimated costs of $100 million or more to either State, local, or tribal governments in the aggregate, or to the private sector. This Federal action imposes no new requirements. Accordingly, no additional costs to State, local, or tribal governments, or to the private sector, result from this action. Thus, this action is not subject to the requirements of sections 202, 203, 204, and 205 of the Unfunded Mandates Act.

G. Submission to Congress and the General Accounting Office

Under 5 U.S.C. 801(a)(1)(A), as amended by the Small Business Regulatory Enforcement Fairness Act of 1996, EPA submitted a report containing this rule and other required information to the U.S. Senate, the U.S. House of Representatives, and the Comptroller General of the General Accounting Office prior to publication of the rule in today's **Federal Register**. This rule is not a ''major rule'' as defined by 5 U.S.C. 804(2).

H. National Technology Transfer and Advancement Act

Section 12(d) of the National Technology Transfer and Advancement Act of 1995 (''NTTAA''), Pub L. 104–113, section 12(d) (15 U.S.C. 272 note) directs EPA to use voluntary consensus

standards in its regulatory activities unless to do so would be inconsistent with applicable law or otherwise impractical. Voluntary consensus standards are technical standards (e.g., materials specifications, test methods, sampling procedures, and business practices) that are developed or adopted by voluntary consensus bodies. The NTTAA directs EPA to provide Congress, through OMB, explanations when the Agency decides not to use available and applicable voluntary consensus standards.

In approving or disapproving negative declarations under section 129 of the Clean Air Act, EPA does not have the authority to revise or rewrite the State's rule, so the Agency does not have authority to require the use of particular voluntary consensus standards. Accordingly, EPA has not sought to identify or require the State to use voluntary consensus standards. Therefore, the requirements of the NTTAA are not applicable to this final rule.

I. Petitions for Judicial Review

Under section 307(b)(1) of the Clean Air Act, petitions for judicial review of this action must be filed in the United States Court of Appeals for the appropriate circuit by January 18, 2000. Filing a petition for reconsideration by the Administrator of this final rule does not affect the finality of this rule for the purposes of judicial review, nor does it extend the time within which a petition for judicial review may be filed, and shall not postpone the effectiveness of such rule or action. This action may not be challenged later in proceedings to enforce its requirements. (See section 307(b)(2), 42 U.S.C. 7607(b)(2)). EPA encourages interested parties to comment in response to the proposed rule rather than petition for judicial review, unless the objection arises after the comment period allowed for in the proposal.

List of Subjects in 40 CFR Part 62

Administrative practice and procedure, Air pollution control, Environmental protection, Intergovernmental relations, Hospital/Medical/Infectious Waste Incinerators, Reporting and recordkeeping requirements.

Dated: November 1, 1999.

John P. DeVillars,

Regional Administrator, Region 1.

40 CFR Part 62 of the Code of Federal Regulations is amended as follows:

PART 62—[AMENDED]

1. The authority citation for Part 62 continues to read as follows:

Authority: 42 U.S.C. 7401–7642

Subpart UU—Vermont

2. Subpart UU is amended by adding a new § 62.11475 and a new undesignated center heading to read as follows:

* * * * *

Air Emissions From Existing Hospital/Medical/Infectious Waste Incinerators

§ 62.11475 Identification of Plan—negative declaration.

On April 16, 1999, the Vermont Agency of Natural Resources submitted a letter certifying that there are no existing hospital/medical/infectious waste incinerators in the state subject to the emission guidelines under Part 60, Subpart B of this chapter.

[FR Doc. 99–29759 Filed 11–15–99; 8:45 am]

BILLING CODE 6560–50–P

FEDERAL COMMUNICATIONS COMMISSION

47 CFR Part 1

[FCC 99–321]

Extension of the Time for Consummation and Notification of Wireless Transfers and Assignments

AGENCY: Federal Communications Commission.

ACTION: Final rule.

SUMMARY: This document amends the Commission's rules to extend the time by which parties must notify the Commission of consummation of an approved wireless license transfer or assignment from 60 to 180 days. The intended effect of this change is to facilitate the rapid deployment of wireless services to the public and enhance the ability of wireless industries to compete effectively in the marketplace.

DATES: Effective November 16, 1999.

FOR FURTHER INFORMATION CONTACT: Jeffrey Steinberg or David Judelsohn, Commercial Wireless Division, Wireless Telecommunications Bureau, (202) 418–0620.

SUPPLEMENTARY INFORMATION: This *Order*, adopted October 28, 1999, and released November 2, 1999, amends § 1.948(d) of the Commission's rules. An OMB 83–C ''Change/Correction Worksheet'' has been submitted to the Office of Management and Budget. The *Order* is available for inspection and copying during normal business hours in the FCC Reference Center, 445 12th Street, S.W., Washington D.C. The complete text may be purchased from the Commission's copy contractor, International Transcription Service, Inc., 1231 20th Street, N.W., Washington D.C. 20036 (202) 857–3800.

Synopsis of the Order

By this Order, we amend § 1.948(d) of the Commission's rules to extend the time by which parties must notify the Commission of consummation of an approved wireless license transfer or assignment from 60 to 180 days. The amendment is being made pursuant to the Commission's initiative to streamline its regulations in an effort to facilitate the rapid deployment of wireless services to the public and enhance the ability of wireless industries to compete effectively in the marketplace. Because this rule change involves a rule of agency procedure, general notice and an opportunity to comment are not required. 5 U.S.C. 553(b)(3)(A).

Currently, § 1.948(d) of the Commission's rules requires all wireless radio service licensees to consummate a transfer or assignment that requires prior Commission approval and notify the Commission of such consummation within 60 days of public notice of approval, unless a request for an extension of time to consummate is filed prior to the expiration of this 60-day period. 47 CFR 1.948(d). See Biennial Regulatory Review—Amendment of Part 0, 1, 13, 22, 24, 26, 27, 80, 87, 90, 95, 97, and 101 of the Commission's Rules to Facilitate the Development and Use of the Universal Licensing System in the Wireless Telecommunications Bureau, WT Docket No. 98–20, 13 FCC Rcd 21027 (1998). 63 FR 68904 (December 14, 1998). It has been our experience, however, that many wireless licensees request Commission approval of these transactions well in advance and routinely require more than 60 days to consummate a transaction after Commission approval. As a result, parties are required to request extensions of the 60-day period, thereby forcing the Commission to allocate limited resources to process these requests.

We believe that this problem can be resolved by expanding the 60-day period for consummation and notification to 180 days. Under the rule that we adopt today, parties to an approved wireless license transfer or assignment will be required to consummate the transaction and notify the Commission of consummation

within 180 days of public notice of Commission approval. In addition, this notification must occur no later than 30 days after consummation. If parties fail to consummate and notify the Commission within 180 days, or fail to request an extension within the 180 day period, approval of the transfer or assignment will automatically be rescinded.

We conclude that the rule we adopt today will relieve substantial administrative burdens on licensees and the Commission staff by eliminating the need for parties to request extensions of time in all but the rarest circumstances. Because most extension requests are routinely granted, this general extension of the time to consummate transactions will not harm the public interest. Based on our experience, we believe 180 days will be enough time to permit most parties to complete their transactions, and that this time frame is short enough to reasonably ensure that the facts on which the Commission's approval is based will not have changed significantly before the transaction is consummated. At the same time, the requirement that notification occur no later than 30 days after consummation will ensure that ownership information in the Commission's databases remains up to date. We note that this 30-day period is the same amount of time given where transfers and assignments do not require prior Commission approval. We also note that this rule change does not modify our authority to impose additional consummation and notification requirements on specific transactions. For example, it has been our practice to require licensees participating in the Commission's installment payment plan to be current in their payments. Thus, prior to consummation, the transferor or assignor continues to be obligated to meet all payment deadlines. Furthermore, prospective transferees or assignees of licenses subject to installment payments may be required to provide signed loan documents to the Commission prior to consummation of the transaction.

Accordingly, *It is ordered* that, pursuant to section 4(i) of the Communications Act, as amended, 47 U.S.C. 154(i), and section 553(b)(3)(A) of the Administrative Procedure Act, 5 U.S.C. 553(b)(3)(A), § 1.948(d) of the Commission's rules, 47 CFR 1.948(d), is amended as described.

This Order is effective upon publication in the **Federal Register**. As a result, the new rule will apply to all transfers and assignments that are pending or have been approved, but not consummated, at the time of, and after, **Federal Register** publication.

List of Subjects in 47 CFR Part 1

Administrative practice and procedure.

Magalie Roman Salas,

Secretary.

For the reasons set forth in the preamble, amend part 1 of title 47 of the Code of Federal Regulations as follows:

PART 1—PRACTICE AND PROCEDURE

1. The authority citation for part 1.948 continues to read:

Authority: 47 U.S.C. 151, 154(i), 154(j), 155, 225, 303(r), 309.

§ 1.948 [Amended]

2. Revise § 1.948(d) to read as follows:

* * * * *

(d) *Notification of consummation.* In all Wireless Radio Services, licensees are required to notify the Commission of consummation of an approved transfer or assignment using FCC Form 603. The assignee or transferee is responsible for providing this notification, including the date the transaction was consummated. For transfers and assignments that require prior Commission approval, the transaction must be consummated and notification provided to the Commission within 180 days of public notice of approval, and notification of consummation must occur no later than 30 days after actual consummation, unless a request for an extension of time to consummate is filed on FCC Form 603 prior to the expiration of this 180-day period. For transfers and assignments that do not require prior Commission approval, notification of consummation must be provided on FCC Form 603 no later than 30 days after consummation, along with any necessary updates of ownership information on FCC Form 602.

* * * * *

[FR Doc. 99–29783 Filed 11–15–99; 8:45 am]

BILLING CODE 6712–01–P

FEDERAL COMMUNICATIONS COMMISSION

47 CFR Part 54

[CC Docket No. 96–45; FCC 99–256]

Federal-State Joint Board on Universal Service

AGENCY: Federal Communications Commission.

ACTION: Final rule.

SUMMARY: This document concerning the Federal-State Joint Board on Universal Service reconsider the Commission's conclusion in the Universal Service Order that only eligible telecommunications carriers may be credited by the Universal Service Administrative Company (USAC) for serving eligible rural health care providers pursuant to section 254(h)(1)(A) of the Communications Act of 1934, amended. It concludes that all telecommunications carriers that provide supported services to eligible rural health care providers at a discount, pursuant to section 254(h)(1)(A), are entitled to have the total amount of the discount treated as a contribution to the preservation and advancement of universal service.

DATES: Effective November 16, 1999.

FOR FURTHER INFORMATION CONTACT: Linda P. Armstrong, Assistant Division Chief, Common Carrier Bureau, Accounting Policy Division, (202) 418–7400.

SUPPLEMENTARY INFORMATION: This is a summary of the Commission's Fourteenth Order on Reconsideration in CC Docket No. 96–45 released on November 3, 1999. The full text of this document is available for public inspection during regular business hours in the FCC Reference Center, Room CY–A257, 445 Twelfth Street, SW, Washington, DC, 20554.

I. Introduction

1. In this Order, we reconsider the Commission's conclusion in the *Universal Service Order*, 62 FR 32862 (June 17, 1997), that only eligible telecommunications carriers (ETCs) may be credited by the Universal Service Administrative Company (USAC) for serving eligible rural health care providers pursuant to section 254(h)(1)(A) of the Communications Act of 1934 (Act), as amended. We find that the Commission's initial interpretation of section 254(h)(1)(A) was too narrow, and that the record compels us to reconsider our earlier interpretation. We conclude that all telecommunications carriers that provide supported services to eligible rural health care providers at a discount, pursuant to section 254(h)(1)(A), are entitled to have the total amount of the discount treated as a contribution to the preservation and advancement of universal service. Accordingly, we direct USAC to apply, as a credit against a carrier's universal service contribution obligation, the amount equal to the difference between the lower, urban rate that a carrier charges eligible health care providers for supported telecommunications services

and the higher, rural rates that would normally be charged to these customers. In addition, a telecommunications carrier may request reimbursement if its total universal service credit exceeds its contribution obligation.

2. We emphasize that an entity must be a ''telecommunications carrier'' in order to be able to use discounted service to satisfy its obligation to contribute to universal service. We also reiterate that universal service support is available to reduce the cost of the distance-based component of services that are based on a unit of distance, such as mileage-based charges under section 254(h)(1)(A). We, therefore, direct USAC to treat the requests for support from eligible health care providers receiving telecommunications service from non-ETCs, the same as it treats those from health care providers receiving telecommunications service from ETCs.

II. Telecommunications Carriers Providing Services Pursuant to Section 254(h)(1)(A)

A. Discussion

3. In light of the record developed by USAC, OAT, and other parties regarding the impact of the Commission's interpretation of section 254(h)(1)(A), and facts that were not apparent at the time the Commission adopted the *Universal Service Order*, we reconsider the Commission's initial interpretation of this section of the statute. Our initial interpretation of section 254(h)(1)(A) was based on the statutory language in the context of section 254 as a whole. After taking a fresh look at the statutory language, and considering the arguments set forth in the record, however, we conclude that the Commission read the statute too narrowly when it concluded that ETCs are the only class of telecommunications carriers that may receive any credit against their universal service contribution obligations in exchange for serving rural health care providers at discounted rates. The new interpretation we adopt in this Order fully comports with the language and the structure of the statute.

4. Section 254(h)(1)(A) requires that ''a telecommunications carrier shall'' serve rural health care providers ''at rates that are reasonably comparable to rates charged for similar services in urban areas in that State.'' Thus, section 254(h)(1)(A) imposes a service obligation on *all* telecommunications carriers, not just ETCs. Our rules already reflect this statutory requirement. Section 254(h)(1)(A) further states that ''[a] telecommunications carrier providing service under this paragraph *shall be entitled* to have an amount equal to the difference, if any,'' between the urban and rural rates ''treated as a part of its obligation to participate in the mechanisms to preserve and advance universal service.'' The Commission initially believed that there is some tension between this statement, which seems to indicate that *all* carriers providing discounts to rural health care providers are entitled to be credited for those discounts pursuant to the mechanism established by section 254(h)(1)(A), and section 254(e), which limits the payment of specific federal universal service support to ETCs. In the *Universal Service Order*, the Commission read section 254(e) as the overriding command, thus concluding that only ETCs should ''be eligible to receive support'' for providing discounted services to rural health care providers. Upon reexamination, however, we now conclude that all carriers required to provide discounts are also entitled to have these ''in kind'' contributions recognized as contributions to universal service, and these ''in kind'' contributions may be used to reduce or otherwise satisfy a carrier's obligation to contribute to universal service. We also conclude that acknowledging a telecommunications carrier's contribution in this fashion is not the same as giving a carrier ''specific Federal universal service support,'' and, therefore, is not a violation of section 254(e).

5. The statute is unambiguous in requiring that *all* carriers provide discounts to rural health care providers upon request. Some parties apparently believe that only ETCs are required to provide discounts to rural health care providers, but that view is contradicted by the clear requirement of section 254(h)(1)(A) that ''a telecommunications carrier shall'' provide such discounts. The Commission's original interpretation, we now realize, would lead to the untenable conclusion that, although all carriers must provide discounts, only some of them will have the full value of those discounts recognized as contributions to the preservation and advancement of universal service.

6. The evidence in the record indicating that rural health care providers have had to rely upon non-ETCs for the services that they require highlights this problematic result. For example, OAT notes that in parts of Alaska, Arizona, and the Pacific Basin the carriers designated as ETCs are incapable of providing certain eligible telecommunications services that the health care providers need for the provision of health care services. Several commenters contend that, in some rural areas, only interexchange carriers, which will not generally be designated as ETCs, are capable of offering advanced services such as T–1 or fractional T–1 bandwidth connections. These comments emphasize that our existing rules create an anomaly: ETCs are the only carriers that can be credited for serving eligible health care providers at discounted rates, but these carriers often are incapable of providing the services that are ''necessary for the provision of health care.''

7. We agree with the suggestion of the State of Alaska that the restriction in section 254(e) that limits the receipt of ''specific Federal universal service support'' to ETCs is distinguishable from the provision in section 254(h)(1)(A). Section 254(h)(1)(A) refers not to receipt of support, but to having the amount of the discount ''treated as a service obligation.'' We interpret ''treated as a service obligation'' to mean that the value of any discount given is treated in the same manner as a cash payment into the universal service fund. In other words, we believe that, pursuant to section 254(h)(1)(A), a carrier may contribute to universal service either in cash or in kind, with the in kind contribution being *via* the provision of telecommunications services at reduced rates. Accordingly, if a carrier satisfies its obligation to contribute to universal service by providing telecommunications service at the urban rate to a RHCP, crediting the carrier for the full amount of the discount it provides acknowledges this as a form of payment of the carrier's contribution obligation, consistent with section 254(h)(1)(A), as it is not reasonably viewed as giving the carrier ''specific Federal universal service support.'' Viewed in this way, section 254(e) does not prevent a non-ETC from receiving full credit for its compliance with the requirements of the statute.

8. Section 254(h)(1)(A) provides that each carrier ''shall be entitled to have an amount Equal to the difference, if any,'' between the urban and rural rates ''treated as a part of its obligation to participate in the mechanisms to preserve and advance universal service.'' Thus, we believe we must ensure that every carrier providing discounted service to RHCPs is in some way given credit for the full value of this contribution to universal service. In order to do this, we conclude that each carrier should first be entitled to an offset against its assessed universal service contribution amount. In the event that the value of its ''service

obligation'' exceeds the amount of its required contribution, we conclude that we should refund the difference to the carrier. Such refunds, as noted, would satisfy the carrier's entitlement to have the value of the discount treated as a service obligation; it would not constitute the receipt of specific universal service support. Given the specific statutory obligation to provide discounts, coupled with the specific statutory entitlement to have the value of those discounts treated as universal service contributions, we believe that both offsets, and refunds where necessary, are required in order to satisfy the requirements of section 254(h)(1)(A).

9. We recognize, as we did in our earlier order, that section 254(h)(1)(B), which addresses discounts provided to schools and libraries, provides an explicit exemption from section 214(e), while section 254(h)(1)(A) does not. We nevertheless conclude, as discussed, that no such explicit exemption is necessary in order to implement the offsets and refunds, where necessary. As to offsets, we note that section 254(h)(1)(B) provides for offsets (which we have always interpreted as applying to all carriers) without providing an exemption from section 214(e), offering further evidence that offsets do not constitute the receipt of specific federal universal service support. As to reimbursement, the schools and libraries provision does provide an exemption from 214(e), which raises the issue of whether refunds to non-ETCs pursuant to the RHCP provisions would require a similar exemption. We conclude, however, that no such exemption is necessary.

10. We note first that sections (A) and (B) differ in their description of how carriers will be credited for their contributions made in the form of discounts. Section (B) refers to reimbursement ''utilizing the [universal service] mechanisms,'' but section (A) contains no parallel language, referring instead to the amount of the discount being ''treated as a service obligation.'' And given the directive that carriers ''shall be entitled'' to have the amount of discounts treated as a service obligation, we believe that it would contravene the language and intent of the statute to prohibit some non-ETC carriers from receiving full credit for their participation. Refunds in such instances serve effectively as simply a return of overpayment of a carrier's universal service obligation, rather than as receipt of universal service support, making an exception to section 254(e) unnecessary.

11. The record supports the conclusion that the Commission's initial interpretation of section 254(h)(1)(A) produces results that are inconsistent with the statutory goals. It is a well-settled rule of statutory construction that the plain language of a statute must not be applied in a manner that produces results that are inconsistent with the clear intent of Congress. To the extent that a statutory provision is reasonably subject to more than one interpretation, we must choose the one that produces results most consistent with the underlying statutory purpose. We agree with the parties who argue that it is ''counterproductive'' to the 1996 Act's goal of competition to permit only ETCs to receive support for serving health care providers. The Secretary of Health and Human Services previously observed that ''[i]f these additional [non-eligible] providers cannot provide discounted service, there will be no price competition in most rural areas.'' USAC and several of the commenters have since documented the lack of significant competition, and the negative impact that it has had on the competitive bidding process and the RHCPs' ability to select the most cost effective method of satisfying their telecommunications service needs. We concur with the State of Alaska that the effects of our original interpretation have been contrary to Congress's intent ''to expand the availability of telemedicine throughout the Nation.'' Accordingly, we conclude that any telecommunications carrier may take advantage of the mechanism found in section 254(h)(1)(A) when it provides telecommunications services at urban rates to health care providers located in rural areas. Our decision today will increase the effectiveness of the competitive bidding process, and assist RHCPs in getting affordable access to modern telecommunications services. As we noted, we are persuaded that the statutory interpretation is consistent with the language of the statute and achieves the statutory goals of section 254 more completely than did the Commission's initial interpretation. We simply find no sound policy basis to support an interpretation that would obligate all carriers to contribute, yet create arbitrary distinctions between ETCs and non-ETCs, and between those whose contributions are greater or lesser than their obligations, when it comes time to acknowledge those contributions.

III. Eligible Telecommunications Services

12. It is important to note that we are not, in this Order, altering the scope of services that eligible rural health care providers will be able to purchase at urban rates. We reiterate that interLATA toll charges will not be supported by universal service support mechanisms, with the limited exception of the support available pursuant to section 254(h)(2) for toll charges incurred by accessing an Internet service provider. Although IXCs, which might not be ETCs, can benefit from the service obligation mechanism of section 254(h)(1)(A) when they serve eligible health care providers, we do not expand the category of supported services to include interLATA toll charges. The distance-based component of services that are supported must be based on a unit of distance, such as mileage-based charges; no per-minute, interLATA toll charges are supported under section 254(h)(1)(A). Because the rates charged for dedicated connections are generally mileage-based, dedicated connections, such as a dedicated T–1 connection between a rural health care provider and an urban hospital, will be supported.

V. Supplemental Final Regulatory Flexibility Analysis

13. In compliance with the Regulatory Flexibility Act (RFA), this Supplemental Final Regulatory Flexibility Analysis (SFRFA) supplements the Final Regulatory Flexibility Analysis (FRFA) included in the *Universal Service Order*, only to the extent that changes to that Order adopted here on reconsideration require changes in the conclusions reached in the FRFA. As required by section 603 RFA, 5 U.S.C. 603, the FRFA was preceded by an Initial Regulatory Flexibility Analysis (IRFA) incorporated in the Notice of Proposed Rulemaking and Order Establishing the Joint Board (NPRM), and an IRFA, prepared in connection with the Recommended Decision, which sought written public comment on the proposals in the NPRM and the Recommended Decision.

A. Need for and Objectives of this Order

14. The Commission is required by section 254 of the Communications Act of 1934, as amended by the 1996 Act, to promulgate rules to implement properly the universal service provisions of section 254. On May 8, 1997, the Commission adopted rules whose principle goal is to reform our system of universal service support mechanisms so that universal service is preserved and advanced as markets move toward competition. In this Order, we reconsider one aspect of those rules. In order to permit all telecommunications carriers that provide telecommunications services to

health care providers pursuant to section 254(h)(1)(A) to have their contributions treated as part of their obligation to participate in the mechanisms to preserve and advance universal service, we reconsider our initial conclusion that only telecommunications carriers designated as ''eligible'' pursuant to section 254(e) can receive a credit against their universal service contribution obligation for providing services at lower, urban rates to rural health care providers.

B. Summary and Analysis of the Significant Issues Raised by Public Comments in Response to the IRFA

15. No party commented in response to either IRFA on the issues addressed in this *Order*.

C. Description and Estimates of the Number of Small Entities to Which the Rules Adopted in This Order will Apply

16. In the FRFA at paragraphs 890 through 925 of the *Universal Service Order*, we described and estimated the number of small entities that would be affected by the new universal service rules. The rules adopted herein may apply to the same entities affected by the universal service rules. We therefore incorporate by reference paragraphs 890 through 925 of the *Universal Service Order*.

D. Summary Analysis of the Projected Reporting, Record keeping, and Other Compliance Requirements and Significant Alternatives

17. In the FRFA to the *Universal Service Order*, we described the projected reporting, Record keeping, and other compliance requirements and significant alternatives associated with the Carrier Eligibility and Health Care Provider sections of the *Universal Service Order*. Because the rules adopted herein may only affect those requirements in a marginal way, we incorporate by reference paragraphs 938 through 942 and 968 through 976 of the *Universal Service Order*, which describe those requirements and provide the following analysis of the new requirements adopted herein.

18. Under the rules adopted herein, we eliminate the requirement that a telecommunications carrier must be an eligible telecommunications carrier under § 54.201(a)(3) of the Commission's rules in order to receive a credit against its universal service contribution obligation for serving eligible health care providers. This revision will benefit health care providers by expanding the category of telecommunications carriers that can benefit from universal service support mechanisms, and, thus, promote competition among carriers serving eligible health care providers. As a result of this rule change, health care providers are likely to receive multiple bids for the supported services they request through the competitive bid process set forth in § 54.603 of the Commission's rules.

E. Steps Taken to Minimize the Significant Economic Impact on a Substantial Number of Small Entities Consistent with Stated Objectives

19. In the FRFA to the *Universal Service Order*, we described the steps taken to minimize the significant economic impact on a substantial number of small entities consistent with stated objectives associated with the Carrier Eligibility and Health Care Provider Sections of the *Universal Service Order*. Because the rules adopted herein may only affect those requirements in a marginal way, we incorporate by reference paragraphs 938 through 942 and 968 through 976 of the *Universal Service Order*, which describe those requirements and provide the following analysis of the new rules adopted.

20. As described, our decision to modify our rules to permit all telecommunications carriers that service eligible health care providers pursuant to section 254(h)(1)(A) of the Act and §§ 54.601 through 54.625 of the Commission's rules will promote competition among telecommunications carriers serving eligible health care providers and, thus, will offer health care providers, which are likely to be small entities, the services they require for the provision of health care services.

VI. Ordering Clauses

21. The authority contained in sections 1–4, 10, 201–202, 214, 220, and 254 of the Communications Act of 1934, as amended, 47 U.S.C. 151–154, 160, 201–202, 214, 220 and 254, and 47 CFR 1.3 and 1.103, this order is adopted and CFR part 54 is adopted. The requirements adopted in this order shall be effective immediately upon publication in the **Federal Register**. They shall be applied prospectively to all future commitments of support for the benefit of rural health care providers, including all pending applications.

22. It is further ordered that the rule changes are effective immediately upon publication in the **Federal Register**. The rule changes adopted here will be applied prospectively to all future commitments of support for the benefit of rural health care providers, including all pending applications.

List of Subjects in 47 CFR Part 54

Universal service.

Federal Communications Commission.

William F. Caton,

Deputy Secretary.

Rule Changes

Part 54 of Title 47 of the Code of Federal Regulations is amended as follows:

PART 54—UNIVERSAL SERVICE

1. The authority for part 54 continues to read as follows:

Authority: 47 U.S.C. 1, 4(i), 201, 205, 214, and 254 unless otherwise noted.

2. Amend § 54.201(a) by revising paragraph (a)(3) to read as follows:

§ 54.201 Definition of eligible telecommunications carriers, generally.

(a) * * *

(3) This paragraph does not apply to offset or reimbursement support distributed pursuant to subpart G of this part.

* * * * *

3. Revise § 54.621 to read as follows:

§ 54.621 Access to advanced telecommunications and information services.

Each eligible health care provider that cannot obtain toll-free access to an Internet service provider shall be entitled to receive the lesser of the toll charges incurred for 30 hours of access per month to an Internet service provider or $180 per month in toll charge credits for toll charges imposed for connecting to an Internet service provider.

[FR Doc. 99–29978 Filed 11–12–99; 12:49 pm]

BILLING CODE 6712–01–P

FEDERAL COMMUNICATIONS COMMISSION

47 CFR Part 73

[MM Docket No. 91–221, 87–8; FCC 99–343]

Review of the Commission's Regulations Governing Television Broadcasting; Television Satellite Stations Review of Policy and Rules

AGENCY: Federal Communications Commission.

ACTION: Interpretation.

SUMMARY: This document determines the procedures to be used to process applications filed pursuant to the local broadcast ownership proceeding. In that proceeding the Commission relaxed

these rules to reflect changes to the media marketplace. The purpose of this action is to resolve issues necessary to commence processing applications filed pursuant to our previously modified rules.

DATES: Effective November 16, 1999.

FOR FURTHER INFORMATION CONTACT: Mary Beth Murphy, (202) 418–2120, Policy and Rules Division, Mass Media Bureau.

SUPPLEMENTARY INFORMATION: This is a summary of the Commission's Order on Reconsideration (''Order''), FCC 99–343, adopted November 10, 1999, and released November 10, 1999. The full text of the Commission's *Order* is available for inspection and copying during normal business hours in the FCC Dockets Branch (Room TW-A306), 445 12 St. S.W., Washington, D.C. The complete text of this *Order* may also be purchased from the Commission's copy contractor, International Transcription Services (202) 857–3800, 1231 20th St., N.W., Washington, D.C. 20036.

Synopsis of Order on Reconsideration

I. Background

1. In this *Order*, we determine the procedures to be used to process applications filed pursuant to the Report and Order (''*Local Ownership Order*''), 64 FR 50651 (September 17, 1999), adopted in the above-captioned local broadcast ownership proceeding on August 5, 1999. In our *Local Ownership Order*, we relaxed our local broadcast ownership rules, specifically the TV duopoly rule and radio-television cross-ownership rule, to reflect changes in the media marketplace. We stated that ''[a]pplications filed pursuant to this *R&O* will not be accepted by the Commission until the effective date'' of the order, which will be sixty days after publication in the **Federal Register**. We also said: ''We realize that the rules adopted in this *R&O* could result in two or more applications being filed on the same day relating to stations in the same market and that due to the voice count all applications might not be able to be granted. We will address how to resolve such conflicts in a subsequent action.''

2. On September 9, 1999, we released a *Public Notice*, FCC 99–240, soliciting comment on procedures for processing applications filed pursuant to the *Local Ownership Order*. We stated that one approach to resolving potential conflicts would be to process applications on a first-come, first-served basis. However, we noted that the difficulties inherent in a system that would require the Commission to determine whose application was filed first on a minute-by-minute—or indeed second-by-second—basis weighs against that approach. Instead, we stated our belief that the most prudent, easy to administer, and fair method for determining the order in which applications filed on the same day will be processed is by random selection. We sought comment on the use of random selection to determine processing order, including our authority to use that procedure in the context of applications for transfer or assignment of existing licenses. We also sought comment on alternative methods, such as auctions or first-come, first-served.

3. After carefully reviewing the comments filed in response to the *Public Notice*, we have decided to use random selection to determine the order in which the Commission will processes applications filed on the same day pursuant to our revised local broadcast ownership rules. In addition, we determine herein which applications will be subject to random selection, and clarify how voices will be counted in a market (including LMAs, other attributable interests, and conditional waivers) for purposes of applying our rules. The purpose of this *Order* is to resolve only those issues necessary to commence processing applications filed pursuant to our modified rules. We have received a number of petitions for reconsideration of our *Local Ownership Order* raising other issues not addressed herein. We will address those issues in a subsequent order.

II. Use of a Lottery

4. *Comments.* A number of commenters expressed concern that processing applications by random selection alone would fail to protect certain pre-existing investments or contractual relationships, including existing Local Marketing Agreements (''LMAs) and other attributable interests.

5. Several commenters also challenged the Commission's authority to use random selection to determine application processing order. Generally, these commenters argue that Section 309(i) of the Communications Act authorizes the Commission to use lotteries only to dispose of initial applications for license, not transfer applications. Moreover, these parties argue that even if 309(i) could be read to apply to transfer applications, Congress revoked any power the FCC had to use a lottery to award commercial broadcast licenses in Section 309(i)(5)(A). Commenters also express the view that random selection is an abdication of the Commission's duty to make a public interest determination under Section 310(d) of the Communications Act.

6. *Discussion.* After careful consideration of the alternatives, we conclude that random selection is the preferable method for determining processing order of applications filed on the same day. This approach gives equal treatment to similarly situated applicants in circumstances where not all applications will be able to be granted as a result of minimum voice counts. In addition, this method is relatively efficient and easy to administer, thereby reducing delays in Commission action. As we stated in the *Public Notice*, we believe random selection is preferable to a ''first-come, first-served'' approach, given the difficulties in determining which application was filed first. Moreover, a ''first-come, first-served'' system could initiate a ''race'' to Mellon Bank to file applications, and result in filers camping out to be first in line at the filing counter. Commenters who addressed this approach agreed that it would be ill-advised. With respect to the concerns raised by parties regarding the treatment of existing LMAs and other interests under a random selection system, we address those concerns below in our discussion of how to calculate the number of voices in a market for purposes of applying the revised ownership rules.

7. We also believe that random selection is preferable to the other approaches suggested by commenters. A ''first to contract'' system would require the Commission to define the types of contracts that would receive priority (*e.g.*, written or verbal, preliminary or final agreements, etc.), raising issues of fairness and likely triggering legal challenges and lengthy delays. Both the point system proposed by UCC and the MMTC proposal to accord priority to applicants who spin off stations to disadvantaged small businesses would be difficult and time consuming to devise and apply, and would also result in potentially lengthy delays in processing applications and increase the potential for time-consuming legal challenges. Our goal in this order is to devise application processing procedures that permit rapid, fair implementation of the revised ownership rules. While the issues raised by UCC and MMTC, including the impact of consolidation on diversity and localism, are of critical importance, these issues have been considered by the Commission in this proceeding and addressed in the *Local Ownership Order*. Moreover, before approving any application under the random selection procedures adopted herein, the Commission must continue to make the

determination that grant of the application serves the public interest.

8. Finally, we continue to believe that we have authority under Sections 310(d) and 4(i) of the Communications Act to use random selection to determine the order in which the Commission processes transfer and assignment applications. In acting on transfer and assignment applications, the Commission must make a determination under Section 310(d) whether the transfer would serve the public interest, and cannot make that determination if the transfer would violate the ownership rules. In carrying out our responsibilities under Section 310(d), we have the authority to devise reasonable means to establish the processing order of transfer applications to allow us to make a public interest determination where our rules permit the grant of some but not all pending applications. Our random selection procedures to determine processing order, adopted herein, are necessary to permit the execution of our mandate under Section 310(d).

8. We disagree with those commenters who argue that random selection is an abdication of our duty to make a public interest determination under Section 310(d). The fact that Congress has specifically permitted the use of lotteries in certain contexts clearly indicates it did not consider this approach incompatible with the Commission's public interest mandate. Moreover, our use of random selection is to assign processing order only; the Commission still must make a determination under Section 310(d) that grant of the application will serve the public interest.

9. We also disagree with those commenters who argue that Section 309(i)(5) of the Act revokes our authority to use lotteries in this context. Section 309(i)(5) provides that ''the Commission shall not issue any license or permit using a system of random selection under this paragraph after July 1, 1997,'' except with respect to noncommercial stations. By its terms, this provision applies only to use of random selection for the issuance of a license or permit, and is inapplicable to the use of a lottery for determining processing order of assignment and transfer applications. We also believe that the better reading of the 1997 amendment to Section 309(i) is that the amendment did not affect the paragraph's basic scope—situations where there is ''more than one application for any initial license or construction permit.'' In the current situation, the applications would be for transfer or assignment of an existing license, not for an initial license or permit. The fact that Congress acted in 1997 to limit Section 309(i) lotteries to noncommercial licenses does not restrict the Commission's authority to conduct a lottery pursuant to Sections 310(d) and 4(i).

III. Filing Procedures

10. *Comments.* A number of commenters raised issues regarding which applications would be subject to the tiebreaking procedure selected by the Commission. Other commenters also would either give priority to certain combinations or exclude certain applications from any tiebreaking procedure ultimately adopted by the Commission.

Discussion

11. *Applications Subject to Random Selection.* We will include in a lottery all transfer and assignment applications relating to stations in the same market that are filed on the same day and that must comply with a voice count under §§ 73.3555, paragraphs (b) and (c), of our rules for grant. Such voice count dependent applications will be assigned, by random selection, a processing priority number. These applications will be processed in order of the date filed and, among applications filed on the same day, in order of their assigned processing priority number. We will not include in a lottery, and will not assign a processing number to, applications that are not voice dependent, such as those filed pursuant to the failed, failing, or unbuilt station waivers under the revised TV duopoly rule, those filed pursuant to the failed station waiver under the revised radio/TV cross ownership rule, applications for combinations of a single television station and a single radio station in a market, as well as radio-only combinations not implicating the radio/TV cross ownership rule. Such applications will be processed in due course.

1. For each application filed with the Commission, it will be necessary to determine the relevant market, whether the application is voice dependent, and whether the application implicates the TV duopoly or radio/TV cross ownership rule. Assignment of processing priority numbers will proceed more rapidly if all of this information is stated in the application or transmittal letter. The Commission staff will issue a public notice with further details regarding the lottery, including the method by which numbers will be selected, as well as further information regarding application processing.

13. *Application Processing.* In processing voice count dependent applications, the Commission will reduce the relevant voice count by: (1) all voice and non-voice count dependent applications pending or granted at the time the voice count dependent application is filed, and (2) all non-voice count dependent applications filed on the same day as the voice count dependent application. Thus, for example, in processing an application for a radio/TV combination filed November 16, 1999, the Commission will consider all radio-only applications filed prior to November 16, 1999 and still pending as of that date, all radio-only applications granted as of that date, as well as any radio-only application, any combination involving a single TV and a single radio station, or any failed, failing, or unbuilt station waiver filed on November 16 that implicates the same market. For purposes of processing the November 16 application, the staff will presume that all pending voice and non-voice count dependent applications and all non-voice count dependent applications filed the same day implicating the same market will be granted. If this presumption precludes grant of the November 16 voice count dependent application, that application will be held until final action on the conflicting application(s) has been taken. If the conflicting application(s) is ultimately denied, the staff will proceed to process the November 16 voice count dependent application. If more than one voice count dependent application was filed on November 16 and was held pending processing of the non-voice count dependent application(s), the Commission will use random selection to determine processing order for such applications.

14. We believe that reducing the voice count by prior grants and applications, and by non-voice count dependent applications (*e.g.*, those filed pursuant to the failed, failing, and unbuilt station waivers, applications for a single radio and single TV station combination, and radio-only applications not implicating the radio/TV cross ownership rule) filed on the same day as a voice count dependent application, best advances our goal in the *Local Ownership Order* of protecting competition and diversity by maintaining voice count floors (*e.g.*, a minimum of 8 TV voices post-grant to obtain a TV duopoly and a minimum of 10 or 20, depending on the size of the combination, radio, TV, newspaper, and cable voices post-grant to obtain a radio/TV combination) in local markets.

While we envisioned in the *Local Ownership Order* that voice counts could drop below the floor as a result, for example, of combinations involving failed, failing, or unbuilt stations, by accounting for the potential impact of these non-voice count dependent applications on the number of voices in the market the voice count floors are more likely to be maintained. We believe that these processing procedures strike an appropriate balance between maintaining a minimum number of voices in the market and establishing certainty with respect to the number of stations available in the market at a given time. Combinations of a single TV and a single radio, which can be obtained in any market and are not voice count dependent, also would reduce the voice count for same-day or subsequently filed voice count dependent applications. We stated in our *Local Ownership Order* that the service benefits and efficiencies achieved from the joint ownership and operation of a single television/single radio combination in local markets further the public interest and outweigh the cost to diversity in these instances; thus, we allowed these combinations in all markets regardless of voice count.

15. *Calculation of Voices.* The FCC's forms require applicants for transfer or assignment of license to certify that, at the time of filing, the application complies with all multiple ownership rules. In order to certify compliance with the voice count components of our revised ownership rules, applicants should determine ownership of relevant media and the existence of any pending applications affecting their market by consulting FCC records and widely recognized, commercially available data sources such as Nielsen Media Research, Arbitron, BIA Companies, Broadcasting & Cable Yearbook, TV Factbook, and Bacon's media directories. Applicants should deviate from the data supplied by these sources only where they have actual knowledge, or could reasonably be charged with knowledge, that the data are in error or are incomplete or outdated in a material respect. Applicants must make a reasonable effort to verify the accuracy of this information and to resolve any conflict in data obtained from different sources.

17. *TV LMAs and Conditional Radio/TV Waivers.* Any LMA attributable under our rules in effect on November 16, 1999, and that was entered into prior to August 5, 1999, the adoption date of the *Local Ownership Order,* will be considered to be attributable to the owner of the brokering station for purposes of the voice count determination. These two stations will thus be considered as a single voice in the market. The effect of this determination is that stations involved in a TV LMA will have the first chance to convert to a duopoly in the market, ahead of any other voice count dependent application. This result is consistent with our determination in the *Local Ownership Order* not to include in our count of independently owned broadcast stations those that are brokered pursuant to an attributable same-market LMA. We concluded that the brokering station has a significant degree of influence over the brokered station's operations and programming such that the latter should not be counted as an independent source of viewpoint diversity.

18. Although applications to convert a TV LMA to ownership will be considered ahead of any voice count dependent application in the same market filed on the same day, the Commission will consider first, before such applications, the impact on the number of voices of any non-voice count dependent application filed for the same market on the same day. In addition, as with other voice count dependent applications, the Commission will also consider first the impact on the number of voices in the market of any previously filed voice or non-voice count dependent application, and any previous grant. As we stated above, we believe that prior consideration of such applications and grants is consistent with our goal in the *Local Ownership Order* to preserve the voice count floors in local markets in order to preserve competition and diversity.

19. In some cases, parties to an LMA may not be able to make the requisite voice count showing to convert the LMA to ownership if the number of voices in the market is below the voice count minimum under our revised rules. This result is consistent with our determination in the *Local Ownership Order* that stations involved in TV LMAs may apply for a duopoly, but must comply with our revised rules. Where TV LMAs cannot make the requisite voice count showing to convert to ownership, the LMA may be able to convert pursuant to one of the waiver criteria adopted in the *Local Ownership Order.* Where conversion to ownership is not possible, TV LMAs may take advantage of the grandfathering and transitional relief accorded in the order.

20. TV LMAs entered into on or after August 5, 1999, and on or before November 16, 1999, will not be considered to reduce the number of voices in a market. As a number of commenters pointed out, giving priority in processing to TV LMAs entered into after adoption of our new rules but before their effective date would unfairly prejudice entities required to wait until the effective date of the rules to file assignment and transfer applications. Entities with such interests may file an application to convert to ownership on or after the effective date of the rules. If such applications are filed on the same day as other voice count dependent applications in the same market, the Commission will use random selection to determine the processing order. Interests not converted to ownership will be considered to have been created as of the effective date of the new rules. Where such interests do not comply with our revised rules, entities will be given a year from the effective date of our new rules (November 16, 1999) to divest.

21. Stations commonly owned by a single entity under a conditional waiver of the radio/TV cross ownership rule will also be considered as a single voice in the market. Thus, as with TV LMAs, entities with a conditional waiver will have the first chance to convert to ownership in the market, ahead of any other voice count dependent application. In our *Local Ownership Order,* we directed conditional waiver grantees to file with the Commission within sixty days of publication of the order in the **Federal Register**, that is by November 16, 1999, a showing sufficient to demonstrate their compliance or non-compliance with our revised radio/TV cross ownership rule. We will treat such showings demonstrating compliance as applications to convert the waiver to permanent ownership, and will treat any filings made before November 16, 1999 as filed on November 16, 1999. Conditional waiver grantees will be treated in the same fashion as parties to a TV LMA entered into prior to August 5, 1999. Thus, although applications to convert conditional waivers to ownership will be considered ahead of any voice count dependent application in the same market filed on the same day, the Commission will consider first, before applications seeking to convert conditional waivers to ownership, the impact on the number of voices of any non-voice count dependent application filed for the same market on the same day. In addition, as with other voice count dependent applications, the Commission will also consider first the impact on the number of voices in the market of any previously filed voice or non-voice dependent application, and

any previous grant. Where conditional waivers can be converted to ownership, the Mass Media Bureau will replace the conditional waiver with permanent approval of the relevant assignment or transfer of license. Where a showing based on voice counts does not qualify for ownership, entities with a conditional waiver may also apply for a failed station waiver and may also take advantage of the grandfathering relief accorded in the *Local Ownership Order.*

22. *Settlement.* The Commission will issue a public notice for each market listing all voice count dependent applications filed on the same day that propose station combinations in the market. Applicants will be given a limited period in which to identify for the staff any other application eligible to be included on the list (*e.g.*, any other application filed on the same day as those listed in the notice that proposes a combination implicating the same market). The public notice will also specify a period during which applicants on the list may reach a universal settlement; that is, a settlement that results in grant or dismissal of all applications identified as eligible to participate in the lottery. Any such settlement agreement must comply with all Commission regulations. If no universal settlement is reached during the settlement period, applications for that market will be assigned a processing priority number by random selection. We believe that permitting universal settlements will serve the public interest by permitting processing of an application(s) without random selection, thereby speeding Commission action on the application. We will not accept settlements involving fewer than all eligible applicants for the market. Partial settlements do not facilitate processing as random selection is still required to determine the processing order.

IV. Administrative Matters

23. *Paperwork Reduction Act of 1995 Analysis.* This Order on Reconsideration has been analyzed with respect to the Paperwork Reduction Act of 1995 and found to impose no new reporting requirements on the public.

24. *Supplemental Final Regulatory Flexibility Act Analysis.* Pursuant to the Regulatory Flexibility Act of 1980, as amended, 5 U.S.C. 601 *et seq.*, the Commission's Final Regulatory Flexibility Act Analysis (FRFA) in the August 5, 1999 *Local Ownership Order* was attached as Appendix A to that order. This *Order on Reconsideration* has no significant economic impact on small entities beyond that described in the discussion of voice tests in the August 5, 1999 FRFA.

25. *Ordering Clauses.* Accordingly, pursuant to the authority contained in Sections 4 (i) & (j), 303(r), 308, 310 and 403 of the Communications Act of 1934, 47 U.S.C. 154 (i) & (j), 303(r), 308, 310 and 403, as amended, this *Order on Reconsideration* is adopted.

26. As the issues resolved herein affect applications that will be filed on November 16, 1999, the effective date of the *Local Ownership Order,* pursuant to 5 U.S.C. 553(d)(3), upon good cause shown, this *Order on Reconsideration* will become effective November 16, 1999.

List of Subjects in 47 CFR Part 73

Television broadcasting.

Federal Communications Commission.

William F. Caton,

Deputy Secretary.

[FR Doc. 99–30019 Filed 11–15–99; 8:45 am]

BILLING CODE 6712–01–p

DEPARTMENT OF COMMERCE

National Oceanic and Atmospheric Administration

50 CFR Part 660

[Docket No. 99040113–01; I.D. 092199D]

Fisheries off West Coast States and in the Western Pacific; West Coast Salmon Fisheries; Commercial and Recreational Inseason Adjustments and Reopening from Cape Flattery to Leadbetter Point, WA

AGENCY: National Marine Fisheries Service (NMFS), National Oceanic and Atmospheric Administration (NOAA), Commerce.

ACTION: Reopening; inseason adjustments; request for comments.

SUMMARY: NMFS announces the following inseason adjustment: the commercial salmon fishery in the area between Cape Alava to Leadbetter Point, WA, for all salmon except chinook reopened on September 5, 1999, with the suspension of certain gear restrictions and the coho trip limit. The fishery closed on September 13, 1999, and will not reopen until further notification. There were 12,400 coho remaining in the quota when the fishery opened. Earlier in the season the 7,000 chinook quota had been reached and the season was closed. But on September 2, 1999, there was a trade of 1,000 chinook, from the north of Cape Falcon recreational salmon fisheries overall chinook quota, for 2,000 coho from the 14,400 coho remaining in the commercial fishery from Cape Alava to Leadbetter Point, WA. The 2,000 coho traded from the commercial fishery were moved to the Cape Alava to Queets River subarea recreational fishery increasing the coho subarea quota to 4,600 fish. The 1,000 chinook were to be used to cover those chinook mortalities related to chinook hooked and released during the 9-day commercial open period targeting coho. These actions were necessary to conform to the 1999 management measures and were intended to ensure conservation of chinook salmon.

DATES: The commercial salmon fishery from the area between Cape Alava to Leadbetter Point, WA, reopened effective 0001 hours local time (l.t.), September 5, 1999, and closed on September 13, 1999. Comments will be accepted through December 1, 1999.

ADDRESSES: Comments may be mailed to William Stelle, Jr., Regional Administrator, Northwest Region, NMFS, NOAA, 7600 Sand Point Way NE., Bldg. 1, Seattle, WA 98115–0070. Information relevant to this document is available for public review during business hours at the Office of the Regional Administrator, Northwest Region, NMFS.

FOR FURTHER INFORMATION CONTACT: William Robinson, 206–526–6140.

SUPPLEMENTARY INFORMATION:

Background

In the 1999 management measures for ocean salmon fisheries (64 FR 24078, May 5, 1999), NMFS announced that the commercial fishery for all salmon from Cape Flattery (48°23'00'' N. lat.) to Cape Alava (48°10'00'' N. lat.) West of 125°05'00'' W. long. and Cape Alava to Leadbetter Point, WA, would open July 10 through the earliest of September 30, 1999, or attainment of the overall chinook quota (preseason 4,500 chinook guideline) or 20,000 coho quota. In a previous inseason adjustment NMFS transferred 2,500 chinook of the remaining 12,884 chinook salmon from the May/June commercial fishery to the July through September fishery from Cape Flattery to Leadbetter Point, WA, making the total guideline for this area for this period 7,000 chinook salmon (64 FR 42856, August 6, 1999).

NMFS also made the additional inseason adjustments. First, NMFS suspended certain gear restrictions (no more than 4 spreads per line; gear restricted to plugs 6 in (15.2 cm) or longer; flashers without hooks may be used if installed below the second spread from the top and will not be counted as a spread; and no more than

one flasher per line), and also suspended the coho trip limit (where each vessel may possess, land and deliver no more than 100 coho per open period) for the open period from July 31 to August 3, 1999. Second, the fishery was closed for the next scheduled open period, August 7–10, 1999, until relevant data regarding the chinook catch was collected and an analysis completed to make an adequate decision for the remaining season. NMFS kept the area closed to fishing through August 14, 1999. Third, NMFS reopened the area between Cape Alava to Leadbetter Point, WA, from August 14 through August 17, 1999, with suspension of gear restrictions and the coho trip limit. Fourth, the estimated catch of chinook was higher than expected, with the total catch as of August 19, 1999, at 7,224 chinook, exceeding the 7,000 chinook guideline, and the total catch of coho at 4,644; therefore, NMFS closed the area to fishing for the remainder of the scheduled season due to attainment of the 7,000 chinook guideline (64 FR 56177, September 18, 1999).

On September 2, 1999, the Regional Administrator consulted with representatives of the Pacific Fishery Management Council (Council), the Washington Department of Fish and Wildlife (WDFW), and the Oregon Department of Fish and Wildlife (ODFW) to discuss the status of catch in both the commercial and recreational salmon fisheries north of Cape Falcon. Earlier in the season the commercial fishery reached the 7,000 chinook quota between Cape Alava and Leadbetter point, WA, and the season was closed. However, only 4,600 coho had been caught out of the 20,000 coho quota. The recreational fishery in the sub-area between Cape Alava and Queets River, WA, caught 1,975 coho of the sub-area quota of 2,600 coho. The chinook caught in the recreational salmon fishery north of Cape Falcon was 9,077 fish, approximately 42 percent of the overall chinook quota of 21,400 chinook.

The sub-area between Cape Alava and Queets River was nearing its coho quota; however, the overall recreational chinook catch was well below the 21,400 fish quota and, in light of a decreasing chinook catch rate, it was very unlikely to reach half that amount with the recreational seasons scheduled to close on September 30, 1999. The States recommended a trade of 1,000 chinook from the north of Cape Falcon recreational salmon fishery's overall chinook quota of 21,400 fish, for 2,000 coho transferred out of the 14,400 coho remaining in the commercial fishery from Cape Alava to Leadbetter Point, WA. The 2,000 coho would be moved to the Cape Alava to Queets River subarea recreational fishery, increasing the coho subarea quota from 2,600 to 4,600 fish, and the 1,000 chinook would be used to cover those chinook mortalities related to chinook hooked and released during the 9-day commercial open period targeting coho. In addition, the States recommended that the previous suspension of certain gear restrictions (no more than 4 spreads per line; gear restricted to plugs 6 in (15.2 cm) or longer; flashers without hooks may be used if installed below the second spread from the top and will not be counted as a spread; and no more than one flasher per line), and also the suspension of the coho trip limit (where each vessel may possess, land and deliver no more than 100 coho per open period) be continued for the 9-day commercial open period targeting coho. Therefore, NMFS reopened the commercial salmon fishery in the area between Cape Alava to Leadbetter Point, WA, for all salmon except chinook on September 5 until September 13, 1999, (when the fishery closed for the season until further notification), with 12,400 coho remaining in the quota, suspension of certain gear restrictions, and suspension of the coho trip limit. NMFS increased the Cape Alava to Queets River subarea recreational salmon fishery's coho subarea quota to 4,600 fish.

Modification of fishing seasons is authorized by regulations at 50 CFR 660.409(b)(1). All other restrictions that applied to these fisheries remained in effect as announced in the annual management measures.

In making these decisions, the Regional Administrator consulted with representatives of the Council, WDFW, and ODFW. The States of Washington and Oregon will manage the commercial and recreational fisheries in state waters adjacent to this area of the exclusive economic zone in accordance with this Federal action. As provided by the inseason notification procedures of 50 CFR 660.411, actual notice to fishermen of these actions was given prior the effective dates by telephone hotline numbers 206–526–6667 and 800–662–9825, and by U.S. Coast Guard Notice to Mariners broadcasts on Channel 16 VHF-FM and 2182 kHz. Because of the need for immediate action to make inseason adjustments to allow harvest and to close the fishery upon achievement of the quota, NMFS has determined that good cause exists for this action to be issued without affording a prior opportunity for public comment. These actions do not apply to other fisheries that may be operating in other areas.

Classification

This action is authorized by 50 CFR 660.409 and 660.411 and is exempt from review under E.O. 12866.

Authority: 16 U.S.C. 1801 *et seq.*

Dated: November 9, 1999.

Bruce C. Morehead,

Acting Director, Office of Sustainable Fisheries, National Marine Fisheries Service.

[FR Doc. 99–29872 Filed 11–15–99; 8:45 am]

BILLING CODE 3510–22–F

Proposed Rules

Federal Register
Vol. 64, No. 220
Tuesday, November 16, 1999

This section of the FEDERAL REGISTER contains notices to the public of the proposed issuance of rules and regulations. The purpose of these notices is to give interested persons an opportunity to participate in the rule making prior to the adoption of the final rules.

DEPARTMENT OF TRANSPORTATION

Federal Aviation Administration

14 CFR Part 39

[Docket No. 99–NM–160–AD]

RIN 2120–AA64

Airworthiness Directives; Raytheon Model Hawker 800 and 1000 Airplanes and Model DH.125, HS.125, BH.125, and BAe.125 Series Airplanes

AGENCY: Federal Aviation Administration, DOT.

ACTION: Notice of proposed rulemaking (NPRM).

SUMMARY: This document proposes the adoption of a new airworthiness directive (AD) that is applicable to certain Raytheon Model Hawker 800 and 1000 airplanes and Model DH.125, HS.125, BH.125, and BAe.125 series airplanes. This proposal would require replacement of cadmium plated fittings and cone caps in the oxygen system plumbing with improved fittings and cone caps, a detailed visual inspection of the oxygen system plumbing in the area of the replaced parts, and corrective actions, if necessary. This proposal is prompted by reports indicating that a field survey of the affected parts revealed that a reaction process was occurring, which resulted in cadmium flaking. The actions specified by the proposed AD are intended to prevent flaking of cadmium from certain oxygen system plumbing fittings and cone caps from blocking the valves and impairing the function of the oxygen system, which could deprive the crew and passengers of necessary oxygen during an emergency that requires oxygen.

DATES: Comments must be received by January 3, 2000.

ADDRESSES: Submit comments in triplicate to the Federal Aviation Administration (FAA), Transport Airplane Directorate, ANM–114, Attention: Rules Docket No. 99–NM–160–AD, 1601 Lind Avenue, SW., Renton, Washington 98055–4056. Comments may be inspected at this location between 9:00 a.m. and 3:00 p.m., Monday through Friday, except Federal holidays.

The service information referenced in the proposed rule may be obtained from Raytheon Aircraft Company, Manager Service Engineering, Hawker Customer Support Department, P.O. Box 85, Wichita, Kansas 67201–0085. This information may be examined at the FAA, Transport Airplane Directorate, 1601 Lind Avenue, SW., Renton, Washington; or at the Small Airplane Directorate, Wichita Aircraft Certification Office, 1801 Airport Road, Room 100, Mid-Continent Airport, Wichita, Kansas 67209.

FOR FURTHER INFORMATION CONTACT: Paul C. DeVore, Aerospace Engineer, Systems and Propulsion Branch, ACE–116W, FAA, Small Airplane Directorate, Wichita Aircraft Certification Office, 1801 Airport Road, Room 100, Mid-Continent Airport, Wichita, Kansas 67209; telephone (316) 946–4142; fax (316) 946–4407.

SUPPLEMENTARY INFORMATION:

Comments Invited

Interested persons are invited to participate in the making of the proposed rule by submitting such written data, views, or arguments as they may desire. Communications shall identify the Rules Docket number and be submitted in triplicate to the address specified above. All communications received on or before the closing date for comments, specified above, will be considered before taking action on the proposed rule. The proposals contained in this notice may be changed in light of the comments received.

Comments are specifically invited on the overall regulatory, economic, environmental, and energy aspects of the proposed rule. All comments submitted will be available, both before and after the closing date for comments, in the Rules Docket for examination by interested persons. A report summarizing each FAA-public contact concerned with the substance of this proposal will be filed in the Rules Docket.

Commenters wishing the FAA to acknowledge receipt of their comments submitted in response to this notice must submit a self-addressed, stamped postcard on which the following statement is made: ''Comments to Docket Number 99–NM–160–AD.'' The postcard will be date stamped and returned to the commenter.

Availability of NPRMs

Any person may obtain a copy of this NPRM by submitting a request to the FAA, Transport Airplane Directorate, ANM–114, Attention: Rules Docket No. 99–NM–160–AD, 1601 Lind Avenue, SW., Renton, Washington 98055–4056.

Discussion

The FAA has received reports indicating that, during a field survey of two Raytheon Model DH.125, HS.125, BH.125 series 400A/400B airplanes equipped with cadmium plated cone caps, a reaction process occurred, which resulted in cadmium flaking. The cause of the flaking has been attributed to the cone caps being made of mild steel with cadmium plating, which may decompose and flake when exposed to oxygen. Flaking of cadmium from oxygen system plumbing fittings and cone caps can block valves and impair the function of the oxygen system. This condition, if not corrected, could result in depriving the crew and passengers of necessary oxygen during an emergency that requires oxygen.

Cone caps and oxygen system plumbing fittings on Raytheon Model Hawker 800 and 1000 airplanes and Model DH.125, HS.125, BH.125, and BAe.125 series airplanes are similar to those on the affected Model DH.125, HS.125, BH.125 series 400A/400B airplanes. Therefore, all of these models may be subject to the same unsafe condition.

Explanation of Relevant Service Information

The FAA has reviewed and approved Raytheon Service Bulletins SB 35–3034, SB 35–3167, SB 35–3168, SB 35–3169, SB 35–3171, and SB 35–3170, all dated September 1998. These service bulletins describe procedures for replacement of cadmium plated fittings and cone caps in the oxygen system plumbing with improved fittings and cone caps; and a detailed visual inspection of the oxygen system plumbing in the area of the replaced parts, and corrective actions, if necessary. The corrective actions include cleaning affected areas and performing a flow check of the oxygen system. Accomplishment of the actions specified in the service bulletins is

intended to adequately address the identified unsafe condition.

Explanation of Requirements of Proposed Rule

Since an unsafe condition has been identified that is likely to exist or develop on other products of this same type design, the proposed AD would require accomplishment of the actions specified in the service bulletins described previously, except as discussed below.

Differences Between Proposed Rule and Service Bulletin

Operators should note that, although the service bulletin specifies that the manufacturer may be contacted for disposition of certain repair conditions, this proposal would require the repair of those conditions to be accomplished in accordance with a method approved by the FAA.

Cost Impact

There are approximately 724 airplanes of the affected design in the worldwide fleet. The FAA estimates that 481 airplanes of U.S. registry would be affected by this proposed AD.

For Model DH.125, HS.125, BH.125 series 1A/1B, 3A/3B, 400A, 400B, 401B, 403A, 403B, 600A, 600B, 700A, 700B airplanes (236 airplanes of U.S. registry), it would take approximately 7 work hours per airplane to accomplish the proposed actions, at an average labor rate of $60 per work hour. Required parts would cost approximately between $28 and $79 per airplane. Based on these figures, the cost impact of the proposed AD on U.S. operators of these airplanes is estimated to be between $105,728, and $117,764, or between $448 and $499 per airplane.

For Model BAe.125 series 800A (C–29A) airplanes (6 airplanes of U.S. registry), it would take approximately 3 work hours per airplane to accomplish the proposed actions, at an average labor rate of $60 per work hour. Required parts would cost approximately $61 per airplane. Based on these figures, the cost impact of the proposed AD on U.S. operators of these airplanes is estimated to be $1,446, or $241 per airplane.

For Model BAe.125 series 800A, and 800B airplanes, and Model Hawker 800 airplanes (202 airplanes of U.S. registry), it would take approximately 10 work hours per airplane to accomplish the proposed actions, at an average labor rate of $60 per work hour. Required parts would cost approximately between $16 and $22 per airplane. Based on these figures, the cost impact of the proposed AD on U.S. operators of these airplanes is estimated to be between $124,432 and $125,644, or between $616 and $622 per airplane.

For Model BAe.125 series 1000A and 1000B airplanes, and Model Hawker 1000 airplanes (37 airplanes of U.S. registry), it would take approximately 6 work hours per airplane to accomplish the proposed actions, at an average labor rate of $60 per work hour. Required parts would cost approximately between $66 and $122 per airplane. Based on these figures, the cost impact of the proposed AD on U.S. operators of these airplanes is estimated to be between $15,762 and $17,834, or between $426 and $482 per airplane.

The cost impact figures discussed above are based on assumptions that no operator has yet accomplished any of the proposed requirements of this AD action, and that no operator would accomplish those actions in the future if this AD were not adopted. However, the FAA has been advised that manufacturer warranty remedies are available for some labor costs associated with accomplishing the actions required by this proposed AD. Therefore, the future economic cost impact of this rule on U.S. operators may be less than the cost impact figures indicated above.

Regulatory Impact

The regulations proposed herein would not have substantial direct effects on the States, on the relationship between the national government and the States, or on the distribution of power and responsibilities among the various levels of government. Therefore, in accordance with Executive Order 12612, it is determined that this proposal would not have sufficient federalism implications to warrant the preparation of a Federalism Assessment.

For the reasons discussed above, I certify that this proposed regulation (1) is not a ''significant regulatory action'' under Executive Order 12866; (2) is not a ''significant rule'' under the DOT Regulatory Policies and Procedures (44 FR 11034, February 26, 1979); and (3) if promulgated, will not have a significant economic impact, positive or negative, on a substantial number of small entities under the criteria of the Regulatory Flexibility Act. A copy of the draft regulatory evaluation prepared for this action is contained in the Rules Docket. A copy of it may be obtained by contacting the Rules Docket at the location provided under the caption **ADDRESSES.**

List of Subjects in 14 CFR Part 39

Air transportation, Aircraft, Aviation safety, Safety.

The Proposed Amendment

Accordingly, pursuant to the authority delegated to me by the Administrator, the Federal Aviation Administration proposes to amend part 39 of the Federal Aviation Regulations (14 CFR part 39) as follows:

PART 39—AIRWORTHINESS DIRECTIVES

1. The authority citation for part 39 continues to read as follows:

Authority: 49 U.S.C. 106(g), 40113, 44701.

§ 39.13 [Amended]

2. Section 39.13 is amended by adding the following new airworthiness directive:

Raytheon Aircraft Company (Formerly Beech): Docket 99–NM–160–AD.

Applicability: Models and series of airplanes as listed in the applicable service bulletin(s) specified in Table 1 of this AD, certificated in any category:

TABLE 1

Model of airplane	Raytheon service bulletin	Date of service bulletin
DH.125, HS.125, BH.125 series 1A, 1B, 3A, 3B, 400A, 400B, 401B, 403A, 403B, 600A, 600B, 700A, and 700B airplanes.	SB 35–3169	September 1998.
BAe.125 series 800A (C–29A) airplanes	SB 35–3171	September 1998.
BAe.125 series 800A and 800B airplanes, and Hawker 800 airplanes	SB 35–3034 and SB35–3170	September 1998
BAe.125 series 1000A and 1000B airplanes, and Hawker 1000 airplanes.	SB 35–3167 and SB 35–3168	September 1998.

Note 1: This AD applies to each airplane identified in the preceding applicability provision, regardless of whether it has been modified, altered, or repaired in the area subject to the requirements of this AD. For airplanes that have been modified, altered, or

repaired so that the performance of the requirements of this AD is affected, the owner/operator must request approval for an alternative method of compliance in accordance with paragraph (f) of this AD. The request should include an assessment of the effect of the modification, alteration, or repair on the unsafe condition addressed by this AD; and, if the unsafe condition has not been eliminated, the request should include specific proposed actions to address it.

Compliance: Required as indicated, unless accomplished previously.

To prevent flaking of cadmium from certain oxygen system plumbing fittings and cone caps from blocking the valves and impairing the function of the oxygen system, which could deprive the crew and passengers of necessary oxygen during an emergency that requires oxygen, accomplish the following:

(a) For Model DH.125, HS.125, BH.125 series 1A, 1B, 3A, 3B, 400A, 400B, 401B, 403A, 403B, 600A, 600B, 700A and 700B airplanes: Within 6 months after the effective date of this AD, replace the cadmium plated cone caps in the oxygen system plumbing with improved cone caps, and perform a detailed visual inspection of the removed cone caps, tee-piece and sleeve for evidence of flaking or corrosion; in accordance with Raytheon Service Bulletin SB 35–3169, dated September 1998. If any flaking or corrosion is detected, prior to further flight, clean the tee-piece and sleeve, and perform an oxygen system flow check in accordance with the service bulletin. If any discrepancy is found during the flow check, prior to further flight, repair the oxygen system in accordance with the service bulletin, except as required by paragraph (e) of this AD.

Note 2: For the purposes of this AD, a detailed visual inspection is defined as: ''An intensive visual examination of a specific structural area, system, installation, or assembly to detect damage, failure, or irregularity. Available lighting is normally supplemented with a direct source of good lighting at intensity deemed appropriate by the inspector. Inspection aids such as mirror, magnifying lenses, etc., may be used. Surface cleaning and elaborate access procedures may be required.''

(b) For Model BAe.125 series 800A (C–29A) airplanes: Within 6 months after the effective date of this AD, replace the cadmium plated cone caps in the oxygen system plumbing with improved cone caps, and perform a detailed visual inspection of the removed cone caps, tee-piece and sleeve for evidence of flaking or corrosion; in accordance with Raytheon Service Bulletin SB 35–3171, dated September 1998. If any flaking or corrosion is detected, prior to further flight, clean the tee-piece and sleeve, and perform an oxygen system flow check in accordance with the service bulletin. If any discrepancy is found during the flow check, prior to further flight, repair the oxygen system in accordance with the service bulletin, except as required by paragraph (e) of this AD.

(c) For Model BAe.125 series 800A and 800B airplanes and Model Hawker 800 airplanes: Within 6 months after the effective date of this AD, replace the cadmium plated cone caps in the oxygen system plumbing with improved cone caps, and perform a detailed visual inspection of the removed cone caps, tee-piece and sleeve for evidence of flaking or corrosion; in accordance with Raytheon Service Bulletins SB35–3034 or SB 35–3170, both dated September 1998, as applicable. If any flaking or corrosion is detected, prior to further flight, clean the tee-piece and sleeve, and perform an oxygen system flow check in accordance with the service bulletin. If any discrepancy is found during the flow check, prior to further flight, repair the oxygen system in accordance with the service bulletin, except as required by paragraph (e) of this AD.

(d) For Model BAe.125 series 1000A and 1000B airplanes and Model Hawker 1000 series airplanes: Within 6 months after the effective date of this AD, replace the cadmium plated fittings in the oxygen system plumbing with improved fittings, and perform a detailed visual inspection of the removed fittings and the pipe connections for evidence of flaking or corrosion; in accordance with Raytheon Service Bulletin SB 35–3167 or SB 35–3168, both dated September 1998, as applicable. If any flaking or corrosion is detected, prior to further flight, clean the pipe connections, and perform an oxygen system flow check in accordance with the service bulletin. If any discrepancy is found during the flow check, prior to further flight, repair the oxygen system in accordance with the service bulletin, except as required by paragraph (e) of this AD.

(e) If any discrepancy is found during a flow check required by paragraph (a), (b), (c), or (d) of this AD and the applicable service bulletin specifies to contact the manufacturer for a repair disposition, prior to further flight, repair the oxygen system in accordance with a method approved by the Manager, Wichita Aircraft Certification Office (ACO), FAA, Small Airplane Directorate.

Alternative Methods of Compliance

(f) An alternative method of compliance or adjustment of the compliance time that provides an acceptable level of safety may be used if approved by the Manager, Wichita ACO, FAA, Small Airplane Directorate. Operators shall submit their requests through an appropriate FAA Principal Maintenance Inspector, who may add comments and then send it to the Manager, Wichita ACO.

Note 3: Information concerning the existence of approved alternative methods of compliance with this AD, if any, may be obtained from the Wichita ACO.

Special Flight Permits

(g) Special flight permits may be issued in accordance with §§ 21.197 and 21.199 of the Federal Aviation Regulations (14 CFR 21.197 and 21.199) to operate the airplane to a location where the requirements of this AD can be accomplished.

Issued in Renton, Washington, on November 9, 1999.

D.L. Riggin,

Acting Manager, Transport Airplane Directorate, Aircraft Certification Service.

[FR Doc. 99–29828 Filed 11–15–99; 8:45 am]

BILLING CODE 4910–13–U

DEPARTMENT OF TRANSPORTATION

Federal Aviation Administration

14 CFR Part 39

[Docket No. 99–NM–24–AD]

RIN 2120–AA64

Airworthiness Directives; Airbus Model A300 B2–1A, B2–1C, B2–203, B2K–3C, B4–103, B4–2C, and B4–203 Series Airplanes

AGENCY: Federal Aviation Administration, DOT.

ACTION: Notice of proposed rulemaking (NPRM).

SUMMARY: This document proposes the adoption of a new airworthiness directive (AD) that is applicable to certain Airbus Model A300 B2–1A, B2–1C, B2–203, B2K–3C, B4–103, B4–2C, and B4–203 series airplanes. This proposal would require modification of the wire harness routing next to the pitch artificial feel unit, and removal of the green and yellow colors from various connectors. This proposal is prompted by issuance of mandatory continuing airworthiness information by a foreign civil airworthiness authority. The actions specified by the proposed AD are intended to prevent the electrical connections of the actuators of the green and yellow hydraulic systems for the pitch artificial feel unit from being cross connected due to the design of the wire harness routing, which could result in a stiff elevator control at takeoff, and consequent reduced controllability of the airplane.

DATES: Comments must be received by December 16, 1999.

ADDRESSES: Submit comments in triplicate to the Federal Aviation Administration (FAA), Transport Airplane Directorate, ANM–114, Attention: Rules Docket No. 99–NM–24–AD, 1601 Lind Avenue, SW., Renton, Washington 98055–4056. Comments may be inspected at this location between 9:00 a.m. and 3:00 p.m., Monday through Friday, except Federal holidays.

The service information referenced in the proposed rule may be obtained from Airbus Industrie, 1 Rond Point Maurice Bellonte, 31707 Blagnac Cedex, France. This information may be examined at the FAA, Transport Airplane Directorate, 1601 Lind Avenue, SW., Renton, Washington.

FOR FURTHER INFORMATION CONTACT: Norman B. Martenson, Manager, International Branch, ANM–116, FAA, Transport Airplane Directorate, 1601 Lind Avenue, SW., Renton, Washington

98055–4056; telephone (425) 227–2110; fax (425) 227–1149.

SUPPLEMENTARY INFORMATION:

Comments Invited

Interested persons are invited to participate in the making of the proposed rule by submitting such written data, views, or arguments as they may desire. Communications shall identify the Rules Docket number and be submitted in triplicate to the address specified above. All communications received on or before the closing date for comments, specified above, will be considered before taking action on the proposed rule. The proposals contained in this notice may be changed in light of the comments received.

Comments are specifically invited on the overall regulatory, economic, environmental, and energy aspects of the proposed rule. All comments submitted will be available, both before and after the closing date for comments, in the Rules Docket for examination by interested persons. A report summarizing each FAA-public contact concerned with the substance of this proposal will be filed in the Rules Docket.

Commenters wishing the FAA to acknowledge receipt of their comments submitted in response to this notice must submit a self-addressed, stamped postcard on which the following statement is made: ''Comments to Docket Number 99–NM–24–AD.'' The postcard will be date stamped and returned to the commenter.

Availability of NPRMs

Any person may obtain a copy of this NPRM by submitting a request to the FAA, Transport Airplane Directorate, ANM–114, Attention: Rules Docket No. 99–NM–24–AD, 1601 Lind Avenue, SW., Renton, Washington 98055–4056.

Discussion

The Direction Générale de l'Aviation Civile (DGAC), which is the airworthiness authority for France, notified the FAA that an unsafe condition may exist on certain Airbus Model A300 B2–1A, B2–1C, B2–203, B2K–3C, B4–103, B4–2C, and B4–203 series airplanes. The DGAC advises that, during maintenance, the electrical connectors of the green and yellow hydraulic systems for the pitch artificial feel unit may have been cross-connected due to the design of the wire harness routing (i.e., similar wire harness lengths leading to the actuator, equivalent electrical connectors, etc.). Cross-connecting these electrical wires could result in a stiff elevator control at takeoff. This condition, if not corrected, could result in reduced controllability of the airplane.

Explanation of Relevant Service Information

Airbus has issued Service Bulletin A300–27–0184, dated August 19, 1996, and Revision 01, dated December 4, 1998, which describes procedures for modification of the wire harness routing next to the pitch artificial feel unit, and removal of the green and yellow colors from various connectors. The modification involves replacing the inclusive fixing points on the wire harness routing next to the pitch artificial feel unit with a new, improved wire harness routing. Accomplishment of the actions specified in the service bulletin is intended to adequately address the identified unsafe condition. The DGAC classified this service bulletin as mandatory and issued French airworthiness directive 98–447–264(B), dated November 18, 1998, in order to assure the continued airworthiness of these airplanes in France.

FAA's Conclusions

This airplane model is manufactured in France and is type certificated for operation in the United States under the provisions of § 21.29 of the Federal Aviation Regulations (14 CFR 21.29) and the applicable bilateral airworthiness agreement. Pursuant to this bilateral airworthiness agreement, the DGAC has kept the FAA informed of the situation described above. The FAA has examined the findings of the DGAC, reviewed all available information, and determined that AD action is necessary for products of this type design that are certificated for operation in the United States.

Explanation of Requirements of Proposed Rule

Since an unsafe condition has been identified that is likely to exist or develop on other airplanes of the same type design registered in the United States, the proposed AD would require accomplishment of the actions specified in the service bulletin described previously.

Cost Impact

The FAA estimates that 1 airplane of U.S. registry would be affected by this proposed AD, that it would take approximately 3 work hours per airplane to accomplish the proposed replacement, and that the average labor rate is $60 per work hour. Required parts would cost approximately $3,079 per airplane. Based on these figures, the cost impact of the proposed AD on U.S. operators is estimated to be $3,259, or $3,259 per airplane.

The cost impact figure discussed above is based on assumptions that no operator has yet accomplished any of the proposed requirements of this AD action, and that no operator would accomplish those actions in the future if this AD were not adopted.

Regulatory Impact

The regulations proposed herein would not have substantial direct effects on the States, on the relationship between the national government and the States, or on the distribution of power and responsibilities among the various levels of government. Therefore, in accordance with Executive Order 12612, it is determined that this proposal would not have sufficient federalism implications to warrant the preparation of a Federalism Assessment.

For the reasons discussed above, I certify that this proposed regulation (1) is not a ''significant regulatory action'' under Executive Order 12866; (2) is not a ''significant rule'' under the DOT Regulatory Policies and Procedures (44 FR 11034, February 26, 1979); and (3) if promulgated, will not have a significant economic impact, positive or negative, on a substantial number of small entities under the criteria of the Regulatory Flexibility Act. A copy of the draft regulatory evaluation prepared for this action is contained in the Rules Docket. A copy of it may be obtained by contacting the Rules Docket at the location provided under the caption **ADDRESSES**.

List of Subjects in 14 CFR Part 39

Air transportation, Aircraft, Aviation safety, Safety.

The Proposed Amendment

Accordingly, pursuant to the authority delegated to me by the Administrator, the Federal Aviation Administration proposes to amend part 39 of the Federal Aviation Regulations (14 CFR part 39) as follows:

PART 39—AIRWORTHINESS DIRECTIVES

1. The authority citation for part 39 continues to read as follows:

Authority: 49 U.S.C. 106(g), 40113, 44701.

§ 39.13 [Amended]

2. Section 39.13 is amended by adding the following new airworthiness directive:

Airbus Industrie: Docket 99–NM–24–AD.

Applicability: Model A300 B2–1A, B2–1C, B2–203, B2K–3C, B4–103, B4–2C, and B4–203 series airplanes; except those airplanes

on which Airbus Modification 10702S20752 (reference Airbus Service Bulletin A300–27–0184, dated August 19, 1996, or Revision 01, dated December 4, 1998) has been accomplished; certificated in any category.

Note 1: This AD applies to each airplane identified in the preceding applicability provision, regardless of whether it has been otherwise modified, altered, or repaired in the area subject to the requirements of this AD. For airplanes that have been modified, altered, or repaired so that the performance of the requirements of this AD is affected, the owner/operator must request approval for an alternative method of compliance in accordance with paragraph (b) of this AD. The request should include an assessment of the effect of the modification, alteration, or repair on the unsafe condition addressed by this AD; and, if the unsafe condition has not been eliminated, the request should include specific proposed actions to address it.

Compliance: Required as indicated, unless accomplished previously.

To prevent the electrical connections of the actuators of the green and yellow hydraulic systems for the pitch artificial feel unit from being cross connected due to the design of the wire harness routing, which could result in a stiff elevator control at takeoff, and consequent reduced controllability of the airplane, accomplish the following:

Replacement and Removal

(a) Within 24 months after the effective date of this AD, perform the actions specified in paragraphs (a)(1) and (a)(2) of this AD in accordance with Airbus Service Bulletin A300–27–0184, Revision 01, dated December 4, 1998.

(1) Replace the wire harness routing with a new, improved wire harness routing.

(2) Remove the green and yellow colors from the connectors specified in the service bulletin.

Note 2: Accomplishment of the actions in paragraph (a) of this AD in accordance with Airbus Service Bulletin A300–27–0184, dated August 19, 1996, is considered acceptable for compliance with this AD.

Alternative Methods of Compliance

(b) An alternative method of compliance or adjustment of the compliance time that provides an acceptable level of safety may be used if approved by the Manager, International Branch, ANM–116, FAA, Transport Airplane Directorate. Operators shall submit their requests through an appropriate FAA Principal Maintenance Inspector, who may add comments and then send it to the Manager, International Branch, ANM–116.

Note 3: Information concerning the existence of approved alternative methods of compliance with this AD, if any, may be obtained from the International Branch, ANM–116.

Special Flight Permits

(c) Special flight permits may be issued in accordance with §§ 21.197 and 21.199 of the Federal Aviation Regulations (14 CFR 21.197 and 21.199) to operate the airplane to a location where the requirements of this AD can be accomplished.

Note 4: The subject of this AD is addressed in French airworthiness directive 98–447–264(B), dated November 18, 1998.

Issued in Renton, Washington, on November 9, 1999.

D.L. Riggin,

Acting Manager, Transport Airplane Directorate, Aircraft Certification Service.

[FR Doc. 99–29827 Filed 11–15–99; 8:45 am]

BILLING CODE 4910–13–U

DEPARTMENT OF TRANSPORTATION

Federal Aviation Administration

14 CFR Part 93

[Docket No. 28902; Notice of Proposed Rulemaking No. 97–6]

Establishing of Corridors in the Grand Canyon National Park Special Flight Rules Area

AGENCY: Federal Aviation Administration (FAA), DOT.

ACTION: Disposition of comments.

SUMMARY: This document summarizes and disposes of comments to a notice of proposed rulemaking (Notice 97–6), published May 15, 1997, which proposed a National Canyon corridor for an air tour route through the central portion of Grand Canyon National Park (GCNP). The FAA withdrew Notice 97–6 because it was considering alternatives to this route. This action summarizes and responds to the comments concerning the National Canyon corridor.

FOR FURTHER INFORMATION CONTACT: Alberta Brown, Air Transportation Division, Flight Standards Service, Federal Aviation Administration, 800 Independence Avenue, SW, Washington, DC 20591; telephone: (202) 267–3724.

SUPPLEMENTARY INFORMATION:

Background

On May 15, 1997, the FAA issued Notice No. 97–6, which proposed a modification to the National Canyon corridor that was originally proposed in December 1996 in the Notice of Proposing Rulemaking (NPMR) addressing the use of quiet technology aircraft in GCNP (61 FR 69334; December 31, 1996). Notice No. 97–6 proposed two quiet technology corridors: (1) the National Canyon corridor through the central portion of the Park; and (2) the Bright Angel corridor in the eastern portion of the Park. The FAA received a total of 143 comments on this proposal from associations, the air tour industry, and individuals. A summary of comments and FAA's response to those comments follows:

Comments

Clark County comments that the proposed National Canyon route ''* * * still fails to provide a sufficient scenic view to support a viable air tour.'' Specifically, this commenter finds that air visitors would lose the extremely scenic views of the Grand Canyon, Havasu Canyon, and Mt. Sinyala that are seen on the current Blue 1. Further, the commenter claims that the lack of a viable Blue 1/1A will result in a dangerous diversion of traffic to the Blue 2 route, economic injury to the air tour industry, and a shift of noise to the Hualapai reservation. It also suggests that, given the lack of a scenic air tour, some visitors will opt for ground tours by bus, train or car. Clark County believes that the Blue 1 route, proposed in above-referenced December 1996 proposal for quiet technology aircraft, is the best option for viable air tour. Clark County continues to endorse the use of quiet technology as providing the best opportunity to promote long-term noise reduction at the least cost to the air tour industry.

In a related economic comment, Clark County notes that the current Blue 1 generates $97.5 million in operating revenues. This commenter finds the FAA's economic analysis flawed in that it assumes that all air visitors would take the 'unscenic' proposed route, and because it assumes that the only loss of revenue from the lose of the scenic portions of Blue 1 would be a tiny diminution in ticket prices. Finally, Clark County comments that, together, the proposed quiet technology route and quiet aircraft will more than meet the Overflight Act's mandate to substantially restore natural quiet in the Park. Clark County also raises a number of rulemaking issues for GCNP not directly related to this rulemaking proposal.

Lake Mead Air urges the FAA to retain the Blue 1 route as it is less offensive to the Native Americans than the proposed route. This commenter believes that the FAA should cease all rulemaking until an Environmental Impact Statement is completed.

Eagle Canyon Airlines believes that there is a potential for increasing unsafe operating conditions if there is no viable air tour route through the National Canyon area. Moreover, this commenter finds it appropriate to return to the route structure as it existed before December 31, 1996. Rather than change the structure of the National Canyon route to accommodate the Havasupai, Eagle Canyon Airlines finds that it

would be more beneficial for the air tour operations if the FAA shifted the route slightly to the north. Eagle reiterates that an air tour must have at least 40 miles of canyon overflight to justify an air tour sold as such.

Southwest Safaris comments that the FAA has failed to consider air tour operations approaching from the south and east and suggests some modifications of routes to avoid congestion and possible safety problems. In a second comment, Southwest Safaris comments that the FAA should not allow any operator to use the Bright Angel corridor until all operators have had the opportunity to convert to quiet technology aircraft; 3 years should be sufficient for this conversion. This commenter also cites competition problems since other companies are unwilling to lease quiet technology aircraft to small operators who might compete with them for tour business.

Airstar Helicopters commends the FAA for responding to the safety concerns generated by Notice 96–15 (Noise Limitations for Aircraft Operations in the Vicinity of Grand Canyon National Park) with a recommendation that the FAA convene a panel of affected parties to reach a consensus on the GCNP.

Scenic Airlines encourages the FAA to adopt the December 1996 proposal for quiet technology aircraft and finds that the proposal in notice 97–6 contains no incentives for operators to convert to quieter aircraft. Scenic finds that the National Canyon route as proposed does not provide a 'quality aerial tour experience' and instead proposes a corridor that would run north of Havasupai tribal lands while remaining south of the Colorado river. This commenter also suggested other route options.

Air Vegas commends the FAA for the reasoned decision to amend two of the flight-free zones with corridors, but finds that the National Canyon route does not provide a viable air tour. Air Vegas believes that Special Federal Aviation Regulation 50–2 has been successful in meeting the goals of substantially restoring the natural quiet in GCNP. The commenter also suggests a slight alternate to the National Canyon route.

The Sierra Club comments that the proposal to establish two routes through flight-free zones is a move away from the goal of Public Law 100–91 to restore the natural quiet in GCNP. While it supports the use of quiet technology aircraft, this commenter believes that methods such as creating corridors through flight-free zones are counterproductive. Sierra Club finds that the National Canyon route provides some relief for the Havasupai reservation; however, it does not provide enough protection for the river corridor. It also finds that a 4-mile width is excessive; if safety is a concern, the number of flights should be reduced. Sierra Club believes that a cap on operations is the only solution to the noise problem in GCNP.

Friends of Grand Canyon states that the proposed routes will actually make noise levels worse in the eastern portion of the Canyon. This commenter finds that the proposed National Canyon modification would bring little relief to the Havasupai, while providing continuous noise to the central portion of the GCNP. In addition, unlimited noise would continue to permeate the entire park since there is no restriction on non-tour aircraft at elevations of 1300 to 9500 feet. This association finds that the NPS and FAA have failed in their responsibility to restore natural quiet to the park.

The General Aviation Manufacturers Association (GAMA) supports the two corridors, saying that they will harm no entity and will have a positive benefit for air tour operators. However, GAMA states that limiting the use of one corridor to Category C aircraft is arbitrary and subjective. Additionally, GAMA comments that the December 31, 2001 date does not provide sufficient time for industry to have new noise reduction technologies available.

The Navajo Nation reminds the FAA of its Section 106 responsibilities under the National Historic Preservation Act and its position that no flights be conducted over the ''salt trail'' and ''Blue Springs'' area. The FAA notes that these two areas are not affected by the Notice 97–6 proposal.

Grand Canyon Air Tour Council (CGATC) comments that the National Canyon route, as proposed, is not a viable air tour route. The Council believes that the two goals of SFAR 50–2 have been met: to increase safety and to substantially restore the natural quiet. AGATC notes that visitor complaints constitute only .0001% of all visitors.

Twin Otter International (TOIL) comments that the FAA has exceeded its statutory authority with the new GCNP rules and that it has incorrectly applied the intent of Congress. Moreover, it has applied a flawed NPS noise model to justify the rules. TOIL finds that there is insufficient incentive for converting to the new technology. Moreover, limiting west-bound traffic to quiet technology after December 2201 is only symbolic since only 2–3% of the air tours from Las Vegas to Tusayan are flown in reverse. In addition, this proposal reduces the viewing time by about 40%. TOIL recommends maintaining a 40-minute canyon viewing experience and further urges the FAA to limit it to quiet technology only.

Grand Canyon Airlines (GCA) comments that there should be more incentive routes for quiet technology aircraft. GCA urges FAA and NPS to work together in a common sense approach, adding that the value in knowing that there is quiet though no one is there is 'elitist hogwash'. GCA believes that FAA discriminated in favor of helicopters by giving them the lowest altitudes and preferred routes.

Sierra Club—Grand Canyon Chapter comments that NPS modeling shows that eliminating all aircraft from National Canyon corridor is an important step in restoring natural quiet to GCNP. Likewise, the Sierra Club—Los Angeles Chapter opposes the proposal to allow a National Canyon route through a flight free zone.

Grand Canyon River Guides comments that there should be no flights through flight free zones. This commenter notes that the Havasupai also want these flights removed. The Guides believe that this is a non-essential route and that people will still book tours, regardless of the location of the route.

The Havasupai Indian Tribe comments that only through government to government negotiations should any aircraft be able to fly over their reservation. They suggest a route through the Sanup flight-free zone that could avoid their reservation. The Havasupai also find the Environmental Assessment insufficient.

More than 100 comments were received from individuals who enjoy the GCNP as ground visitors. The majority of these comments state that routes through flight-free zones defeated the purpose of the final rule. Many of these commenters want no flights over GCNP, even by quiet technology aircraft.

The FAA's response

As stated in the withdrawal of Notice No. 97–6, the FAA, in consultation with the NPS, had determined to not proceed with the proposals set forth in that notice. Following the withdrawal, the FAA continued to search for a route through the GCNP that would provide a viable air tour while at the same time contributing to the restoration of natural quiet in the Park.

The focus of this search for a new air tour route changed significantly with the publication in the **Federal Register** of NPS's policy dressing a dual noise

standard for GCNP (64 FR 38006; July 14, 1999). NPS's policy revised the noise evaluation methodology and established a dual noise level mapping of GCNP. The methodology effectively devised a two zone system for assessing the impacts related to the substantial restoration of natural quiet in GCNP. Zone One is based on the standard of noticeability, which was used previously for noise assessments in GCNP and is determined to be three decibels above the A-weighted natural ambient level. Zone Two is based on the standard of audibility, which is determined to be eight decibels below the average A-weighted natural ambient level. The National Canyon corridor proposed in Notice 97–6 would have passed through Zone 2. Consequently, application of the audibility standard to the National Canyon area precludes this area from consideration as a possible air tour route. The FAA recently has proposed two air tour routes through the central portion of the GCNP, which do not infringe on Zone Two. Notice No. 99–11, Modification of the Dimensions of the Grand Canyon National Park Special Flight Rules Area and Flight Free Zones (64 FR 37296; July 9, 1999) and a companion Notice of availability on routes in Grand Canyon National Park (64 FR 37191; July 9, 1999) both had a 60-day comment period that closed on September 7, 1999.

The FAA appreciates the comments that the public provided on the proposals in Notice 97–6. Commenters provided valuable insights into what constitutes a viable air tour route. Other commenters expressed the value of restoring natural quiet in GCNP. Native American tribes took this opportunity to express their concerns for any air tour route that could affect their sacred properties. These comments assist the FAA and NPS in their continuing efforts to develop air tour routes in GCNP.

Issued in Washington, DC on November 5, 1999.

L. Nicholas Lacey,

Director, Flight Standards Service.

[FR Doc. 99–29901 Filed 11–15–99; 8:45 am]

BILLING CODE 4910–13–M

DEPARTMENT OF THE TREASURY

Customs Service

19 CFR Part 141

RIN 1515–AC15

Anticounterfeiting Consumer Protection Act: Customs Entry Documentation

AGENCY: Customs Service, Treasury.

ACTION: Notice of proposed rulemaking; extension of comment period.

SUMMARY: This document provides an additional 30 days for interested members of the public to submit comments on the proposal to amend the Customs Regulations to implement section 12 of the Anticounterfeiting Consumer Protection Act of 1996 (ACPA). Section 12 of the ACPA concerns the content of entry documentation required by Customs to determine whether imported merchandise or its packaging bears an infringing trademark. The proposed regulatory provision requires importers to provide on the invoice a listing of all trademarks appearing on the imported merchandise and its packaging. The proposal was published in the **Federal Register** on September 13, 1999, and the comment period was scheduled to expire on November 12, 1999.

DATES: Comments on the proposal must be received on or before December 13, 1999.

ADDRESSES: Written comments (preferably in triplicate) may be addressed to the Regulations Branch, Office of Regulations and Rulings, U.S. Customs Service, Ronald Reagan Building, 1300 Pennsylvania Avenue, NW, Washington, DC 20229. All comments submitted will be available for public inspection in accordance with the Freedom of Information Act (5 U.S.C. 552), § 1.4, Treasury Department Regulations (31 CFR 1.4), and § 103.11(b), Customs Regulations (19 CFR 103.11(b)) between 9:00 a.m. and 4:30 p.m. on normal business days at the Regulations Branch, Office of Regulations and Rulings, U.S. Customs Service, 1300 Pennsylvania Avenue, NW, 3rd Floor, Washington, DC.

FOR FURTHER INFORMATION CONTACT: Lou Alfano, Commercial Enforcement, Office of Field Operations (202) 927–0005.

SUPPLEMENTARY INFORMATION:

Background

Customs published a document in the **Federal Register** (64 FR 49423) on September 13, 1999, proposing to implement section 12 of the Anticounterfeiting Consumer Protection Act of 1996 (ACPA). Section 12 of the ACPA concerns the content of entry documentation required by Customs to determine whether imported merchandise or its packaging bears an infringing trademark. The proposed regulatory provision requires importers to provide on the invoice a listing of all trademarks appearing on the imported merchandise and its packaging.

The document invited the public to comment on the proposal. Comments on the proposed rule were requested on or before November 12, 1999.

On November 8, 1999, Customs received a request from the Customs and International Trade Bar Association to extend the comment period an additional 30 days.

Customs has determined to grant the request for the extension. Accordingly, the period of time for the submission of comments is being extended 30 days. Comments are now due on or before December 13, 1999.

Dated: November 9, 1999.

Stuart P. Seidel,

Assistant Commissioner, Office of Regulations and Rulings.

[FR Doc. 99–29793 Filed 11–15–99; 8:45 am]

BILLING CODE 4820–02–P

RAILROAD RETIREMENT BOARD

20 CFR Part 322

RIN 3220–AB38

Remuneration

AGENCY: Railroad Retirement Board.

ACTION: Proposed rule.

SUMMARY: The Railroad Retirement Board (Board) proposes to amend its regulations defining remuneration and how that term is applied to claims for benefits under the Railroad Unemployment Insurance Act (RUIA) to reflect changes in that statute and to reflect administrative rulings not readily available to the public.

DATES: Comments should be submitted on or before January 18, 2000.

ADDRESSES: Any comments should be addressed to the Secretary to the Board, Railroad Retirement Board, 844 North Rush Street, Chicago, Illinois 60611.

FOR FURTHER INFORMATION CONTACT: Thomas W. Sadler, Senior Attorney, Railroad Retirement Board, (312) 751–4513, FAX (312) 751–7102, TDD (312) 751–4701.

SUPPLEMENTARY INFORMATION: As administrator of the RUIA, the Railroad Retirement Board pays benefits to

qualified railroad employees for their days of unemployment or days of sickness, as defined in section 1(k) of the Act. Benefits are not payable for any day if ''remuneration'', as defined in section 1(j) of the RUIA, is payable or accrues to the employee for such day. Part 322 defines the term ''remuneration'' and explains how the term is applied to claims for benefits, but it has not been revised in recent years to reflect statutory changes and agency practice and procedure.

Section 322.1 which currently recites applicable statutory provisions, is proposed to be revised to provide a plain language introduction that explains the purpose of part 322.

The general definition of ''remuneration'' set forth in § 322.2 is proposed to be revised by expanding the definition to cover two statutory exceptions to the definition, subsidiary remuneration and supplemental unemployment or sickness benefits.

Section 322.3(b) is proposed to be amended by explaining that although ''remuneration'' does not accrue for days that are termed ''layover'' days, such days are not compensable ''days of unemployment''. Also, a new paragraph (d) is proposed to be added to explain the rules that would apply to a fully employed employee who has additional days off from work by reason of a compressed or flexible work schedule.

Paragraph (a) of § 322.4 is proposed to be revised by indicating that the Board will seek information from the employee's base year employer on whether remuneration is payable for days claimed.

Section 322.5 is proposed to be amended to remove a reference to an obsolete regulation.

Paragraph (a) of § 322.6 is proposed to be revised by indicating that payments made to an employee with respect to personal injury are considered remuneration unless allocated to other ''damages''.

Section 322.7 is proposed to be revised to conform with the practices of the railroad industry that coordination and dismissal allowances, separation, and severance payments are remuneration, even when paid other than through a collective bargaining agreement, and even when paid as the result of an involuntary dismissal or separation.

Section 322.8 is proposed to be amended to update the amount of earnings by a local lodge official that may be regarded as subsidiary remuneration. This amendment is necessary because of a statutory change that increased to $15 per day the amount of an employee's earnings that comes within the definition of subsidiary remuneration.

Finally, a new § 322.9 is proposed to be added to explain the term ''subsidiary remuneration''. Such remuneration does not prevent payment of benefits, except as explained in § 322.9.

The Board, with the concurrence of OMB, has determined that this is not a significant regulatory action for purposes of Executive Order No. 12866. Therefore no regulatory impact analysis is required. The information collection requirements contained in this rule have been approved by the Office of Management and Budget under control numbers 3220–0049 and 3220–0022.

List of Subjects in 20 CFR Part 322

Railroad employees, Railroad unemployment benefits, Reporting and recordkeeping requirements.

For the reasons set out in the preamble, the Railroad Retirement Board proposes to amend title 20, chapter II, part 322 of the Code of Federal Regulations as follows:

PART 322—REMUNERATION

1. The authority citation for part 322 is revised to read as follows:

Authority: 45 U.S.C. 362(l).

2. Section 322.1 is revised to read as follows:

§ 322.1 Introduction.

The Railroad Unemployment Insurance Act provides benefits for a qualified employee's days of unemployment or days of sickness, as defined in section 1(k) of the Act. Under that section, no day can be a day of unemployment or a day of sickness for any employee if ''remuneration'' is payable or accrues to the employee for such day. In computing the amount of benefits payable to an employee for days of unemployment or days of sickness in any registration period, or in determining whether the employee has satisfied the waiting period requirement, the Board will not count any day with respect to which remuneration is payable or accrues to the employee. Section 322.2 defines the term ''remuneration'' and explains what types of payments to employees constitute remuneration.

3. Section 322.2 is revised to read as follows:

§ 322.2 General definition of remuneration.

(a) *Remuneration.* (1) Remuneration includes pay for services for hire, pay for time lost as defined in § 322.6, and other earned income payable or accruing with respect to any day. Income is ''earned'' if it is payable or accrues in consideration of services and if such services were in turn rendered in consideration of the income payable or accruing.

(2) Remuneration includes income in the form of a commodity, service, or privilege if, before the performance of the service for which it is payment, the parties have agreed upon the value of such commodity, service, or privilege, and that such part of the amount agreed upon to be paid may be paid in the form of such commodity, service, or privilege.

(3) Remuneration for a working day that includes a part of two consecutive calendar days is deemed to have been earned on the first of such two days.

(b) *Subsidiary remuneration.* For the purpose of this part, remuneration does not include subsidiary remuneration, as defined in § 322.9. Subsidiary remuneration for any day does not prevent such day from being a day of unemployment or a day of sickness, except as explained in § 322.9.

(c) *Supplemental unemployment or sickness benefits.* The term remuneration does not include money payments received by an employee pursuant to any nongovernmental plan for unemployment or sickness insurance, as defined in part 323 of this chapter. Employer payments of sick pay to an employee are remuneration, except when payment is made pursuant to a nongovernmental plan for sickness insurance.

4. In § 322.3, revise paragraph (b), and add a new paragraph (d) to read as follows:

§ 322.3 Determining the days with respect to which remuneration is payable or accrues.

* * * * *

(b) *Layover days.* Remuneration shall not be regarded as payable or accruing to an employee with respect to his or her ''layover'' days between regular assignments in train and engine service solely because they are termed ''layover'' days. But no such ''layover'' day may be considered as a day of unemployment or sickness. See § 332.6 of this chapter.

* * * * *

(d) *Equivalent of full-time work.* An employee who works fewer than five days each week under a compressed work schedule that provides the equivalent of full-time employment does not earn remuneration with respect to his or her additional rest days resulting from such work schedule, but such employee will not be considered to be available for work on such rest days. See § 327.10(d) of this chapter.

5. In § 322.4, revise paragraph (a) to read as follows:

§ 322.4 Consideration of evidence.

(a) *Initial proof.* A claimant's certification that he or she did not work on any day claimed and did not receive income such as vacation pay or pay for time lost for any such day shall constitute sufficient evidence for an initial finding that no remuneration is payable or has accrued to him or her with respect to such day, unless a base year employer reports that he or she worked on days claimed or received payments that constitute remuneration as defined in this part, or unless there is other conflicting evidence.

* * * * *

§ 322.5 [Amended].

6. Amend § 322.5(c)(2) by removing ''in accordance with § 222.3(h) of this chapter''.

7. In § 322.6, revise paragraph (a) to read as follows:

§ 322.6 Pay for time lost.

(a) *Definition.* The term ''pay for time lost'' means any payment made to an employee with respect to an identifiable period of time during which the employee was absent from the active service of the person or company making the payment, including absence on account of personal injury. The entire amount paid to an employee who was absent on account of personal injury is pay for time lost if such amount includes pay for time lost, unless at the time of payment the parties, by agreement, specify a different amount as the amount of the pay for time lost and the period of time covered by such pay. The amount allocated to time lost is remuneration for every day in the period of time lost. The amount of a payment for personal injury that is apportioned to factors other than time lost is, nevertheless, a portion of ''damages'' for the purposes of part 341 of this chapter.

* * * * *

8. Revise § 322.7 to read as follows:

§ 322.7 Dismissal, coordination, and separation allowances.

(a) *Coordination or dismissal allowance.* Coordination or dismissal allowances are payments made to an employee who has been furloughed for a specified period of time during which he or she continues in an employment relationship and remains subject to call. Such pay is remuneration with respect to each day in the month or other period for which it is payable. The employer shall be held liable to the Board for any benefits paid to the employee and found recoverable under section 2(f) of the Railroad Unemployment Insurance Act by reason of the payment of any such allowances or other pay for the same days for which the Board paid benefits.

(b) *Separation allowance.* A separation allowance or severance payment made to an employee who voluntarily or involuntarily terminates his or her employment relationship is not remuneration with respect to any day after the employment relationship is severed. An employee who is paid a separation allowance, whether in a lump sum or in installments, is disqualified by section 4(a–1)(iii) of the Railroad Unemployment Insurance Act from receiving unemployment or sickness benefits for the period of time approximating the length of time it would have taken the employee to earn, at his or her ''straight'' time rate of pay, the amount of the separation allowance if he or she had continued working in the job from which he or she separated.

§ 322.8 [Amended].

9. In § 322.8(e) remove the phrase ''three dollars'' and add in its place ''$15''.

10. Add new § 322.9 to read as follows:

§ 322.9 Subsidiary remuneration.

(a) *Definition.* The term ''subsidiary remuneration'' means remuneration not in excess of an average of $15 per day for the period with respect to which it is payable or accrues, if—

(1) The work from which the remuneration derives requires substantially less than full time as determined by generally prevailing standards; and

(2) The work is susceptible of performance at such times and under such circumstances as not to be inconsistent with the holding of normal full-time employment in another occupation.

(b) *Exception.* If a claimant's remuneration is ''compensation'' as defined in part 302 of this chapter, such remuneration is not subsidiary unless the claimant had base year compensation from a different position or occupation of not less than two and one-half times the monthly compensation base for months in the base year in which he or she received the remuneration. Compensation in excess of an average of $15 per day is remuneration for the days for which it is payable or accrues.

(c) *Period for which remuneration is payable or accrues.* The ''period'' of time used in determining whether remuneration averages more than $15 per day depends on the terms and conditions of the employment and the rate of payment for the work. If the claimant is paid a monthly salary, the ''month'' is the period with respect to which the pay must average not more than $15 per day. The average is the monthly salary divided by 30. If the claimant is paid a weekly salary, the amount of the salary is divided by seven. If the claimant is paid by the hour or the day, the ''period'' is the day. Where payment is made by the hour or the day, the pay is not added up and then averaged out over the week or the month. For example, earnings of $20 on one day and $10 on another day do not average out to $15 per day so as to permit both days to be considered as days of unemployment or days of sickness.

(d) *Substantially less than full time.* The phrase ''substantially less than full time'' means employment of not more than four hours per day.

(e) *Compatibility with full time employment.* Work is considered to be susceptible of performance at such times and under such circumstances as not to be inconsistent with the holding of normal full-time employment in another position or occupation if it is a form of secondary employment that a claimant has done or could do at his or her own convenience while performing the duties of his or her railroad job.

(f) *Determinations.* The Board shall make a determination whether remuneration is subsidiary by applying the standards in this section to the facts of each case. Earnings that average more than $15 per day are not subsidiary remuneration under any circumstances. Also, earnings of any amount that are included in a claimant's qualifying base year compensation are not subsidiary remuneration. Even if earnings do not exceed an average of $15 per day, they may still not be subsidiary remuneration if the claimant worked more than four hours per day or if the work had to be performed at such times and under such circumstances as to be inconsistent with the holding of normal full-time work in his or her regular railroad work. If the evidence does not establish that the earnings are subsidiary remuneration, the question whether they are remuneration for particular days will then be considered.

(g) *Examples.* The following examples illustrate this section:

(1) A claimant receives a salary of $350 per month for serving as secretary-treasurer of the local lodge of his union. He performs a variety of duties at his own convenience while holding down a full-time railroad job in his craft. The average payment per day is not more

than $15 and is, therefore, subsidiary remuneration.

(2) A claimant worked three hours per day, at $5 per hour, in the family insurance business. He was marked up for work as an extra board trainman and worked whenever he was called. When called, he skipped work in the family insurance business. His insurance earnings of $15 per day were subsidiary remuneration.

(3) While unemployed from her railroad job, a claimant took a job as a school bus driver. She worked from 7 a.m. to 9 a.m., and 2:30 p.m. to 5:30 p.m. Her regular railroad job was a daytime job from 8 a.m. to 4:30 p.m. Her pay as a school bus driver was not subsidiary remuneration because the job was not compatible with the holding of full time work in her regular railroad occupation.

Dated: November 4, 1999.

By Authority of the Board.

Beatrice Ezerski,

Secretary to the Board.

[FR Doc. 99–29655 Filed 11–15–99; 8:45 am]

BILLING CODE 7905–01–P

DEPARTMENT OF LABOR

Occupational Safety and Health Administration

29 CFR Part 1952

[Docket No. T–033]

Nevada State Plan; Eligibility for Final Approval Determination; Proposal to Grant an Affirmative Final Approval Determination; Comment Period and Opportunity To Request Public Hearing

AGENCY: Occupational Safety and Health Administration (OSHA), U.S. Department of Labor.

ACTION: Proposed final State plan approval; request for written comments; notice of opportunity to request informal public hearing.

SUMMARY: This document gives notice of the eligibility of the Nevada State occupational safety and health plan, as administered by the Nevada Division of Industrial Relations, for determination under section 18(e) of the Occupational Safety and Health Act of 1970 as to whether final approval of the State plan should be granted.

If an affirmative determination under section 18(e) is made, Federal standards and enforcement authority will no longer apply to issues covered by the Nevada plan. This document announces that OSHA is soliciting written public comment regarding whether or not final State plan approval should be granted, and offers an opportunity to interested persons to request an informal public hearing on the question of final State plan approval.

DATES: Written comments or requests for a hearing should must be received by December 16, 1999.

ADDRESSES: Written comments or requests for a hearing should be submitted, in duplicate, to the Docket Officer, Docket No. T–033, U.S. Department of Labor, Room N2625 200 Constitution Avenue N.W., Washington. DC 20210, (202) 693–2350. Comments limited to 10 pages or fewer may also be transmitted by FAX to: (202) 693–1648, provided that the original and one copy of the comment are sent to the Docket Office immediately thereafter. Electronic comments may be submitted on the Internet at: http://www.osha-slc.gov/e-comments/e-comments-nevada.html .

FOR FURTHER INFORMATION CONTACT: Bonnie Friedman, Director, Office of Information and Consumer Affairs, Occupational Safety and Health Administration, U.S. Department of Labor, Room N3637, 200 Constitution Avenue NW., Washington, DC 20210, (202) 693–1999.

SUPPLEMENTARY INFORMATION:

Background

Section 18 of the Occupational Safety and Health Act of 1970, 29 U.S.C. 651, *et seq*, (the ''Act'') provides that States which desire to assume responsibility for the development and enforcement of occupational safety and health standards may do so by submitting, and obtaining Federal approval of a State plan. Procedures for State Plan submission and approval are set forth in regulations at 29 CFR Part 1902. If the Assistant Secretary, applying the criteria set forth in section 18(c) of the Act and 29 CFR 1902.3 and .4, finds that the plan provides or will provide for State standards and enforcement which are at least as effective as Federal standards and enforcement, ''initial approval'' is granted. A State may commence operations under its plan after this determination is made, but the Assistant Secretary retains discretionary Federal enforcement authority during the initial approval period as provided by section 18(e) of the Act. A State plan may receive initial approval even though, upon submission, it does not fully meet the criteria set forth in §§ 1902.3 and 1902.4, if it includes satisfactory assurances by the State that it will take the necessary ''developmental steps'' to meet the criteria within a three-year period (29 CFR 1902.2(b)). The Assistant Secretary publishes a ''certification of completion of developmental steps'' when all of a State's developmental commitments have been satisfactorily met (29 CFR 1902.34).

When a State plan that has been granted initial approval is developed sufficiently to warrant a suspension of concurrent Federal enforcement activity, it becomes eligible to enter into an ''operational status agreement'' with OSHA (29 CFR 1954.3(f)). A State must have enacted its enabling legislation, promulgated State standards, achieved an adequate level of qualified personnel, and established a system for review of contested enforcement actions. Under these voluntary agreements, concurrent Federal enforcement will not be initiated with regard to Federal occupational safety and health standards in those issues covered by the State plan, where the State program is providing an acceptable level of protection.

Following the initial approval of a complete plan, or the certification of a developmental plan, the Assistant Secretary must monitor and evaluate actual operations under the plan for a period of at least one year to determine, on the basis of actual operations under the plan, whether the criteria set forth in section 18(c) of the Act and 29 CFR 1902.37 are being applied and whether final approval should be granted.

An affirmative determination under section 18(e) of the Act (usually referred to as ''final approval'' of the State plan) results in the relinquishment of authority for Federal concurrent enforcement jurisdiction in the State with respect to occupational safety and health issues covered by the plan (29 U.S.C. 667(e)). Procedures for section 18(e) determinations are found at 29 CFR Part 1902, Subpart D. In general, in order to be granted final approval, actual performance by the State must be ''at least as effective'' overall as the Federal OSHA program in all areas covered under the State plan.

An additional requirement for final approval consideration is that a State must meet the compliance staffing levels, or benchmarks, for safety inspectors and industrial hygienists established by OSHA for that State. This requirement stems from a 1978 Court Order by the U.S. District Court for the District of Columbia (*AFL–CIO* v. *Marshall*, C.A. No. 74–406), pursuant to a U.S. Court of Appeals decision, that directed the Assistant Secretary to calculate for each State plan State the number of enforcement personnel needed to assure a ''fully effective'' enforcement program.

The last requirement for final approval consideration is that a State must participate in OSHA's Integrated Management Information System (IMIS). This is required so that OSHA can obtain the detailed program performance data on a State necessary to make an objective continuing evaluation of whether the State performance meets the statutory and regulatory criteria for final approval.

History of the Nevada Plan and of Its Compliance Staffing Benchmarks

Nevada Plan

On December 12, 1972, Nevada submitted an occupational safety and health plan in accordance with section 18(b) of the Act and 29 CFR Part 1902, Subpart C, and on March 16, 1973 a notice was published in the **Federal Register** (38 FR 7157) concerning the submission of the plan, announcing that initial Federal approval of the plan was at issue and offering interested persons 30 days in which to submit data, views and arguments in writing concerning the plan.

Written comments concerning the plan were submitted on behalf of the American Federation of Labor and Congress of Industrial Organizations (AFL–CIO). No other written comments were received, and no request for an informal hearing was received. In response to concerns raised by the AFL–CIO, as well as issues noted by OSHA, the State made clarifications and revisions to its plan, particularly in the areas of employee rights. Thereafter, on January 4, 1974, the Assistant Secretary published a **Federal Register** notice (39 FR 1008) granting initial approval of the Nevada plan as a developmental plan and adopting Subpart W of Part 1952 containing the decision and describing the plan.

The Nevada Division of Industrial Relations in the State Department of Business and Industry is designated as the agency having responsibility for administering the plan throughout the State under the authority of the Nevada Occupational Safety and Health Act (Nevada Revised Statutes, Chapter 618). The plan covers all private sector employers with the exception of private employers on Indian land, Federal employers and, to the extent that any exist in Nevada, employers engaged in longshoring and maritime operations upon any navigable waters in the State. Such employers remain subject to Federal OSHA jurisdiction. Federal OSHA also retains authority for coverage of the United States Postal Service (USPS), including USPS employees, contract employees, and contractor-operated facilities engaged in USPS mail operations. The State's coverage extends to all State and local government employers. The plan provides for the automatic adoption by Nevada of standards which are identical to Federal occupational safety and health standards, on the effective date of the Federal standard, unless the State adopts an alternate standard which is as effective as the Federal standard. The plan requires employers to furnish employment and place of employment which is free from recognized hazards that are causing or are likely to cause death or serious physical harm, and to comply with all occupational safety and health standards promulgated by the State agency. Employees are required to comply with all standards and regulations applicable to their conduct.

The plan contains provisions similar to Federal procedures governing: inspection and citation procedures; emergency temporary standards; imminent danger proceedings; coverage under the general duty clause; variances; safeguards to protect trade secrets; protection of employees against discrimination for exercising their rights under the plan; and employer and employee rights to participate in inspection and review proceedings. Notices of contest of citations and penalties are heard by the Occupational Safety and Health Review Board, an independent administrative board. Decisions of the Review Board may be appealed to the appropriate State District Court.

The Assistant Secretary's initial approval of the Nevada developmental plan, a general description of the plan, a schedule of required developmental steps, and a provision for the exercise of discretionary concurrent Federal enforcement during the period of initial approval were codified in the Code of Federal Regulations (29 CFR Part 1952, Subpart W, 39 FR 1008, January 4, 1974).

In accordance with the State's developmental schedule, all major structural components of the plan were put in place and documentation submitted for OSHA approval on or before January 1, 1977. These ''developmental steps'' included enactment of amendments to the Nevada Occupational Safety and Health Act, promulgation of State occupational safety and health standards identical to Federal standards and establishment of a public employee program. In completing these developmental steps, the State developed and submitted for Federal approval all components of its program including, among other things: regulations for inspections, citations and proposed penalties; recordkeeping and reporting regulations; variance regulations; compliance procedures; and, rules of procedure for the Nevada Occupational Safety and Health Review Board.

These submissions were carefully reviewed by OSHA; after opportunity for public comment and modification of State submissions, where appropriate, the major plan elements were approved by the Assistant Secretary as meeting the criteria of section 18 of the Act and 29 CFR 1902.3 and 1902.4. The Nevada Subpart of 29 CFR Part 1952 was amended to reflect each of these approval determinations (see 29 CFR 1952.292).

On August 13, 1981, in accordance with procedures at 29 CFR 1902.34 and 1902.35, the Assistant Secretary certified that Nevada had satisfactorily completed all developmental steps (46 FR 42844; August 25, 1981). In certifying the plan, the Assistant Secretary found the structural features of the program—the statutes, standards, regulations, and written procedures for administering the Nevada plan—to be as effective as corresponding Federal provisions. Certification does not, however, entail findings or conclusions by OSHA concerning adequacy of actual plan performance. As has already been noted, OSHA regulations provide that certification initiates a period of evaluation and monitoring of State activity to determine in accordance with section 18(e) of the Act whether the statutory or regulatory criteria for State plans are being applied in actual operations under the plan and whether final approval should be granted.

On December 9, 1981, OSHA and the State of Nevada entered into an Operational Status Agreement which suspended the exercise of Federal concurrent enforcement authority in Nevada in all except specifically identified areas. (See 47 FR 25323).

The State has submitted plan supplements describing changes to its program since plan approval. OSHA's approval of major plan changes has been announced in **Federal Register** notices published periodically. Approval of more recent change submissions will be published in the **Federal Register** as appropriate.

Nevada Benchmarks

Under the terms of a 1978 Court Order in *AFL–CIO* v. *Marshall,* compliance staffing levels (benchmarks) necessary for a ''fully effective'' enforcement program were required to be established for each State operating an approved State plan. In 1980, in response to the Court Order, OSHA established

benchmarks for all approved State plans, including benchmarks of 7 safety and 9 health compliance officers for Nevada. The 1978 Court Order noted that new information might warrant an adjustment by OSHA of the fully effective benchmarks. In July 1986, Nevada, in conjunction with OSHA, completed a reassessment of the levels resulting in proposed revised compliance staffing benchmarks of 11 safety and 5 health compliance officers. After opportunity for public comment and service on the AFL–CIO, the Assistant Secretary approved these revised staffing requirements on September 11, 1987 (52 FR 34381).

Determination of Eligibility

This **Federal Register** notice announces the eligibility of the Nevada plan for final approval determination under section 18(e). (29 CFR 1902.39(c) requires that notice of this determination of eligibility be published in order to seek public input prior to the Assistant Secretary's decision.) The determination of eligibility is based upon OSHA's findings that:

(1) The Nevada plan has been monitored in actual operation for at least one year following certification. The results of OSHA's monitoring of the plan since the commencement of plan operations are contained in written evaluation reports which are made available to the State and to the public. The results of OSHA's most recent post-certification monitoring are set forth in a comprehensive evaluation report covering the period of July 1, 1995 through March 31, 1999, with special attention to the period from October 1, 1997 to March 31, 1999, which has been made part of the record of the present proceedings and is available in Docket T–033, together with all previous evaluation reports since 1981.

(2) The plan meets the State's revised benchmarks for enforcement staffing. On September 11, 1987, pursuant to the terms of the Court Order and the 1980 Report to the Court in *AFL–CIO* v. *Marshall*, OSHA approved revised fully effective benchmarks of 11 safety and 5 health compliance officers for Nevada based on an assessment of State-specific characteristics and historical experiences. Nevada has allocated positions well in excess of these numbers, as evidenced by the FY 1999 Application for Federal Assistance in which the State has committed itself to funding the State share of salaries for 22 safety and 9 health compliance officers. The FY 1999 grant application has been made part of the record in the present proceeding.

Nevada provides State funds for its program well in excess of the 50% match of Federal funding required. The additional funds have allowed the State to expand staffing and activities in both its enforcement and voluntary compliance programs.

(3) Nevada participates and has assured its continued participation in the Integrated Management Information System (IMIS) developed by OSHA.

Like other States with approved plans, Nevada has developed a five-year Strategic Plan to guide its efforts to improve occupational safety and health in the State. The State's strategic goals are similar to those of Federal OSHA (improve workplace safety and health, change workplace culture, and assure public confidence). The Strategic Plan and the FY 1999 Annual Performance Plan are available in Docket T–033.

Issues for Determination in the 18(e) Proceedings

The Nevada plan is now at issue before the Assistant Secretary for determination as to whether the criteria of section 18(c) of the Act are being applied in actual operation in a manner at least as effective as the Federal program. 29 CFR 1902.37(a) requires the Assistant Secretary, as part of the final approval process to determine if the State has applied and implemented all the specific criteria and indices of effectiveness of §§ 1902.3 and 1902.4. The Assistant Secretary must make this determination by considering the factors set forth in § 1902.37(b). OSHA believes that the results of its evaluation of the Nevada program as described in the most recent evaluation report, considered in light of these regulatory criteria and the criteria in section 18(c) of the Act, indicate that the regulatory indices and criteria are being met. The Assistant Secretary accordingly has made an initial determination that the Nevada plan is eligible for an affirmative section 18(e) determination. This notice initiates proceedings by which OSHA expects to elicit public comment on the issue of granting an affirmative section 18(e) determination to Nevada. In order to encourage the submission of informed and specific public comment, a summary of current evaluation findings with respect to these criteria is set forth below.

(a) Standards and Variances. Section 18(c)(2) of the Act requires State plans to provide for occupational safety and health standards which are at least as effective as Federal standards. A State is required to adopt, in a timely manner, all Federal standards and amendments or to develop and promulgate State standards and amendments at least as effective as the Federal standards. See §§ 1902.37(b)(3), 1902.3(c), 1902.4 (a) and (b). The Nevada plan provides for the automatic adoption of standards which are identical to Federal standards. A new standard becomes effective in Nevada on the effective date of the Federal standard. The State may adopt alternative standards and has adopted some standards which do not have Federal counterparts, such as standards concerning ammonium perchlorate and tower cranes. Nevada also has regulations requiring pre-construction safety conferences with the Division of Industrial Relations for certain types of construction projects.

The State also requires employers with more than 10 employees to implement safety and health programs, including a safety and health committee for employers with more than 25 employees. For issues where OSHA is considering issuing a rule, as in the case of safety and health programs, the agency does not take action to decide whether the State plan requirements are at least as effective until the Federal action is complete. Nor can OSHA review this requirement for compliance with the National Labor Relations Act (NLRA), which is independently administered by the National Labor Relations Board. The Board's General Counsel has noted in a written opinion that committee requirements under State law do not amount to a per se violation of the NLRA; however, the General Counsel has pointed out that employers must comply with State laws in a manner which does not constitute an unfair labor practice under the NLRA. Nevada's standards adoption process continued to meet the six-month time frame for adoption of OSHA standards requiring State action during the section 18(e) evaluation period. [18(e) Evaluation Report, page 16]

Where a State adopts Federal standards, the State's interpretation and application of such standards must be consistent with Federal interpretation and application. Where a State develops and promulgates its own standards, interpretation and application must ensure protection at least as effective as comparable Federal standards and enforcement procedures. While acknowledging the effectiveness of individual standards, this requirement stresses that State standards, in actual operation, must be at least as effective as the Federal standards. See §§ 1902.37(b)(4), 1902(c)(1), 1902.3(d)(l), 1903.4(a), and 1902.4(b)(2). As already noted, the Nevada plan provides for adoption of standards identical to Federal standards. Nevada also generally adopts Federal interpretations

and thus assures at least as effective worker protection.

The State is required to take the necessary administrative, judicial or legislative action to correct any deficiency in its program caused by an administrative or judicial challenge to any State standard, whether the standard is identical to the Federal standards or developed by the State. See § 1902.37(b)(5). No such challenge to State standards has ever occurred in Nevada.

When granting permanent variances from standards, the State is required to ensure that the employer provides as safe and healthful working conditions as would have been provided if the standard were in effect. See §§ 1902.37(b)(6) and 1902.4(b)(2)(iv). Nevada had five requests for permanent variances during the 18(e) evaluation period. Two requests were approved, two were denied, and one was canceled. The granted variances were processed in accordance with State procedures. [18(e) Evaluation Report, p. 16.] Where a temporary variance is granted, the State must ensure, among other things, that the employer complies with the standard as soon as possible and provides appropriate interim employee protection. See §§ 1902.37(b)(7) and 1902.4(b)(2)(iv). The Nevada temporary variance procedures require that any employer granted a temporary variance must have an effective program for coming into compliance with the standard as soon as possible. During the section 18(e) evaluation period, no temporary variance requests were received. [18(e) Evaluation Report. p.16].

(b) Enforcement. Section 18(c)(2) of the Act requires State plans to maintain an enforcement program which is at least as effective as that conducted by Federal OSHA. Section 18(c)(3) requires the State plan to provide for right of entry and inspection of all work places at least as effective as that in section 8 of the Act.

Inspection Targeting. The State inspection program must provide for sufficient resources to be directed to designated target industries while providing adequate protection to all other workplaces covered under the plan. See §§ 1902.37(b)(8), 1902.3(d)(l), and 1902.4(c). Nevada uses a list of high hazard industries provided by OSHA to schedule programmed general industry inspections and uses Dodge Reports and local knowledge to schedule construction inspections. The State's strategic plan is focusing on three industries with high rates of injuries and illnesses: manufacturing, construction and hotel/casinos. During the period from October 1997 though March 1999, 53% of the State's safety inspections and 11% of health inspections were programmed. During this period the 68% of programmed safety inspections and 71% of programmed health inspections uncovered violations. This exceeds the percentage of Federal programmed inspections with violations and indicates that the State's targeting system is effective. [18(e) Evaluation Report, p. 7]

Denials of Entry. In cases of refusal of entry, the State must exercise its authority, through appropriate means, to enforce the right of entry and inspection. See §§ 1902.37(b)(9). 1902.3 (e) and (f), and 1902.4(c)(2)(i) and (ix). Section 618.325 of the Nevada Occupational Safety and Health Act provides for an inspector's right of entry during regular hours to any place of employment. During the evaluation period, there were 14 denials of entry. Entry was achieved in 11 of these cases. This exceeds the Federal experience during the period. [18(e) Evaluation Report, p. 9]

Inspection Procedures. Inspections must be conducted in a competent manner following approved enforcement procedures which include the requirement that inspectors acquire information adequate to support any citation issued. See §§ 1902.37(b)(10), 1902.3(d)(1), and 1902.4(c)(2). Procedures for the Nevada occupational safety and health compliance program are set out in the Nevada Operations Manual, which is patterned after Federal compliance documents, and the State follows inspection procedures, including documentation procedures, which are similar to Federal procedures. The Evaluation Report notes overall adherence by Nevada to these procedures.

Identifying and Citing Hazards: Nevada cited an average of 2.7 violations per safety inspection and 3.3 violations per health inspection. In addition to issuing citations, the State issues ''Notices of Violation'' for other-than-serious violations that do not carry a penalty, when the employer agrees to abate the violation and not to contest. During the evaluation period, 27% of both safety and health violations were cited as serious. The percentage of serious safety and health violations was lower than the comparable Federal percentages. While OSHA has disagreed with the State on the classification of some violations in the past, no systemic problems relating to violation classification have been found. The State continues to provide compliance officers with specific training and direction to ensure the proper classification of violations of standards. [18(e) Evaluation Report, pp.10–12]

Advance Notice: State plans must include a prohibition on advance notice of inspections, and exceptions must be no broader than those allowed by Federal OSHA procedure. See § 1902.3(f). Nevada has adopted approved procedures for advance notice similar to the Federal procedures. During the evaluation period, Nevada did not grant any advance notice of inspections.

Employee Participation: State plans must provide for inspections in response to employee complaints, and must provide an opportunity for employee participation in State inspections. See § 1902.4(c)(i) through (iii). Nevada has procedures similar to Federal OSHA for processing and responding to complaints. The data indicate that during the evaluation period the State was timely in responding to employee complaints, responding to 92% of serious safety and health complaints within the prescribed time frame of 30 days. During the period from October 1997 through March 1999, 25% of State inspections were in response to employee complaints. In 89.8% of cases during the period, complainants were informed of inspection results within 20 working days of citation issuance or, where no citations were issued, within 30 working days of the closing conference. The State also responds to non-formal complaints by letter and utilizes a phone/fax system to expedite response to non-serious complaints. [18(e) Evaluation Report, p. 10] The State also has procedures similar to those of Federal OSHA which require that an opportunity be provided for employee participation be provided, either through representation on the walkaround or the conduct of interviews with a reasonable number of employees. No problems have been noted concerning employee participation in Nevada inspections.

Nondiscrimination. State plans must also provide protection for employees against discrimination similar to that found in section 11(c) of the Federal Act. See § 1902.4(c)(2)(v). Section 618.445 of the Nevada Occupational Safety and Health Act provides for discrimination protection equivalent to that provided by Federal OSHA. A total of 136 investigations of complaints alleging discrimination were completed during the evaluation period, of which 14 were found to be meritorious. The State takes appropriate action in the courts on merit cases where the employer does not voluntarily comply

with the State's proposed remedy. During the evaluation period, Nevada experienced difficulty in meeting the 90-day time limit for completion of discrimination investigations. The State is taking action to ensure timely processing of complaints by training additional discrimination investigators, and one of its strategic goals is the completion of 75% of discrimination cases within 90 days. [18(e) Evaluation Report, p. 15]

Citations and Proposed Penalties. The State is required to issue, in a timely manner, citations, proposed penalties, and notices of failure to abate. See §§ 1902.37(b)(11), 1902.3(d), and 1902.4(c)(2) (x) and (xi). The State's lapse time from last day of inspection to issuance of citation averaged 40 days for safety and 53 days for health. Both of the lapse times are comparable to Federal OSHA's time lapse. [18 (e) Evaluation Report, p. 12]

The State must propose penalties in manner that is at least as effective as the penalties under the Federal program, which includes first instance violation penalties and consideration of factors comparable to those required in the Federal program in calculating penalties. See §§ 1902.37(b)(12), 1902.3(d), and 1902.4(c) (x) and (xi). Nevada's procedures for penalty calculation are similar to the Federal procedures. During the evaluation period, Nevada proposed higher penalties for serious violations than Federal OSHA. The average penalty for serious safety violations was $1844 and the average serious health penalty was $1336. [18(e) Evaluation Report, p. 12]

Abatement. The State must ensure abatement of hazards cited including issuance of notices of failure to abate and appropriate penalties. See §§ 1902.37(b)(13), 1902.3(d), and 1902.4(c)(vii) and (xi). Eighty-eight percent (88%) of serious safety violations had abatement periods of less than 30 days and 97% of serious health violations had abatement periods of less than 60 days. This compares favorably to Federal performance. The Notice of Violation policy has been successful in assuring prompt abatement of other-than-serious violations without litigation. [18(e) Evaluation Report, p. 12]

Whenever appropriate, the State must seek administrative and judicial review of adverse adjudications. Additionally, the State must take necessary and appropriate action to correct any deficiencies in its program which may be caused by an adverse administrative or judicial determination. See §§ 1902.37(b)(14) and 1902.3 (d) and (g). Nevada has taken action when appropriate to appeal adverse decisions. The Nevada section 18(e) Evaluation Report noted that a case involving egregious citations was appealed to the Nevada Supreme Court by the State. The case was settled before hearing. [18(e) Evaluation Report, p. 7]

(c) *Staffing and Resources.* The State is required to have a sufficient number of adequately trained and competent personnel to discharge its responsibilities under the plan. See section 18(c)(4) of the Act; 29 CFR 1902.37(b)(1), 1902.3(d) and 1902.3(h). A State must also direct adequate resources to administration and enforcement of the plan. See section 18(c)(5) of the Act and § 1902.3(I). As discussed above, the Nevada plan provides for 22 safety compliance officers and 9 industrial hygienists as set forth in the Nevada FY 1999 grant. This staffing level exceeds the approved, revised ''fully effective'' benchmarks for Nevada for health and safety staffing, as discussed elsewhere in this notice. At the close of the evaluation period the State had 20 safety and 9 health compliance officers positions filled. [18(e) Evaluation Report, p. 21] The State maintains offices in Carson City, Reno, Elko and Las Vegas.

Since 1991, the State has consistently provided State matching funds in excess of Federal funding. In Fiscal Year 1999, the State provided 76% of the total budget for its occupational safety and health program. State program funding in Fiscal Year 1999 is $4,917,275 total ($1,163,000 Federal, $3,754,275 State). [18(e) Evaluation Report, pp. 1, 22]

Nevada utilizes the OSHA Training Institute for most of its staff training. The State also conducts internal training through staff meetings regarding any new issues or standards. In addition, enforcement and consultation staffs conduct joint regional meetings to discuss standards and other issues to ensure that enforcement and consultation have the same understanding of the requirements of the standards.

(d) *Other Requirements.* Public Employees: States which have approved plans must maintain a safety and health program for State and local employees which must be as effective as the State's plan for the private sector. See § 1902.3(j). The Nevada plan provides a program in the public sector which is similar to that in the private sector, including inspections, citations and proposal of penalties for serious violations. During this evaluation period, the State conducted 4.4% of its total inspections in the public sector. The results of these inspections were comparable to those in the private sector. [18(e) Evaluation Report, pp. 14–15]

Injury/Illness Rates: As a factor of its section 18(e) determination, OSHA must consider whether the Bureau of Labor Statistics' annual occupational safety and health survey and other available Federal and State measurements of program impact on worker safety and health indicate that trends in worker safety and health injury and illness rates under the State program compare favorably with those under the Federal program. See § 1902.37(b)(15). Nevada's lost workday case rate for private industry declined from 4.2 in 1994 to 3.3 in 1997. The lost workday case rate for construction decreased from 7.5 to 5.6, while there was substantial growth in the construction industry particularly in the southern part of the State. The rate for manufacturing increased slightly from 5.0 to 5.2. The rate for State and local government decreased from 3.6 to 3.4. [18(e) Evaluation Report, p. 18] Nevada also participates in the OSHA Data Initiative for gathering employer-specific injury and illness rates.

Required Reports: State plans must assure that employers in the State submit reports to the Secretary in the same manner as if the plan were not in effect. See section 18(c)(7) of the Act; 29 CFR 1902.3(k). The plan must also provide assurance that the designated agency will make such reports to the Secretary in such form and containing such information as he may from time to time require. Section 18(c)(8) of the Act; 29 CFR 1902.4(1). Nevada employer recordkeeping requirements are identical to those of Federal OSHA, and the State participates in the BLS Annual Survey of Occupational Illness and Injuries and the OSHA Data Initiative. As noted above, the State participates and has assured its continuing participation with OSHA in the Integrated Management Information System (IMIS) as a means of providing reports on its activities to OSHA and submits other information and reports as required.

Voluntary Compliance: Section 1902.4(c)(2)(xiii) requires States to undertake programs to encourage voluntary compliance by employers by such means as conducting training and consultation with employers and employees. The Nevada consultation program, which until July 1, 1999 operated its private sector component under the State plan rather than OSHA's section 21(d) consultation program, includes 14 consultants and 4 trainers. The State provides consultation services to both the private and public sectors. During the evaluation period, Nevada

conducted 1781 consultation visits, primarily in smaller high hazard private sector establishments. From Fiscal Year 1996 through Fiscal Year 1999, the State conducted 739 safety and health classes, reaching a total of 6,737 employers and 8,551 employees. Training covered such issues as developing safety and health programs, lockout/tagout, fall protection, hazard communication and bloodborne pathogens. In addition, the Safety Consultation and Training Section has carried out substantial promotion and outreach efforts through a multi-media campaign, including television and newspaper public service announcements, funded by the State.

Effect of Section 18(e) Determination

If the Assistant Secretary, after review of the written comments received and the results of any informal hearing if requested and held, determines that the statutory and regulatory criteria for State plans are being applied in actual operations, final approval will be granted and Federal standards and enforcement authority will cease to be in effect with respect to issues covered by the Nevada plan, as provided by Section 18(e) of the Act and 29 CFR 1902.42(c). Nevada has excluded private sector maritime employment and private employers on Indian land from its plan. In addition, the plan does not have jurisdiction over Federal agencies. Thus, Federal coverage of these areas would be unaffected by an affirmative section 18(e) determination. Federal OSHA will also retain authority for coverage of the United States Postal Service (USPS), including USPS employees, contract employees, and contractor-operated facilities engaged in USPS mail operations and all Federal employers in Nevada.

In the event an affirmative section 18(e) determination is made by the Assistant Secretary following the proceedings described in the present notice, a notice will be published in the **Federal Register** in accordance with 29 CFR 1902.43; the notice will specify the issues as to which Federal standards and enforcement authority is withdrawn and provide notice that Federal authority with respect to enforcement under section 5(a)(1) of the Act and discrimination complaints under section 11(c) of the Act remains in effect. The notice would state that if continuing evaluations show that the State has failed to maintain a compliance staff which meets the revised fully effective benchmarks, or has failed to maintain a program which is at least as effective as the Federal, or that the State has failed to submit program change supplements as required by 29 CFR Part 1953, the Assistant Secretary may revoke or suspend final approval and reinstate Federal enforcement authority or, if the circumstances warrant, initiate action to withdraw approval of the State plan. At the same time, Subpart W of 29 CFR Part 1952, which codifies OSHA decisions regarding approval of the Nevada plan, would be amended to reflect the section 18(e) determination if an affirmative determination is made.

Documents of Record

All information and data presently available to OSHA relating to the Nevada section 18(e) proceeding have been made a part of the record in this proceeding and placed in the OSHA Docket Office. The contents of the record are available for inspection and copying at the following locations: Docket Office, Room N–2625, Docket No. T–033, Occupational Safety and Health Administration, U.S. Department of Labor, 200 Constitution Avenue NW, Washington, DC 20210; Office of the Regional Administrator, Occupational Safety and Health Administration, 71 Stevenson Street, Suite 420, San Francisco, California 94105; and Nevada Division of Industrial Relations, 400 West King Street, Carson City, Nevada 89703. To date, the record on final approval determination includes copies of all **Federal Register** documents regarding the plan, including notices of plan submission, initial Federal approval, certification of completion of developmental steps, codification of the State's operational status agreement, and other plan supplements. The record also includes: the State plan document (as amended through June 29, 1999), which includes a plan narrative, the State legislation, regulations and procedures, and an organizational chart for State staffing; the State's FY 1999 Federal grant; and the July 1, 1995 through March 31, 1999 18(e) Evaluation Report and all previous, post-certification reports.

Public Participation

Request for Public Comment and Opportunity to Request Hearing

The Assistant Secretary is directed under § 1902.41 to make a decision whether an affirmative section 18(e) determination is warranted. As part of the Assistant Secretary's decision-making process, consideration must be given to the application and implementation by Nevada of the requirements of section 18(c) of the Act and all specified criteria and indices of effectiveness as presented in 29 CFR 1902.3 and 1902.4. These criteria and indices must be considered in light of the factors in 29 CFR 1902.37(b) (1) through (15). However, this action will be taken only after all the information contained in the record, including OSHA's evaluation of the actual operations of the State plan, and information presented in written submissions and during an informal public hearing, if held, is reviewed and analyzed. OSHA is soliciting public participation in this process so as to assure that all relevant information, views, data and arguments related to the indices, criteria and factors presented in 29 CFR Part 1902, as they apply to Nevada's State plan, are available to the Assistant Secretary during this administrative proceeding.

Interested persons are invited to submit written data, views, and comments with respect to this proposed section 18(e) determination. These comments must be received on or before December 16, 1999, and submitted in duplicate to the Docket Officer, Docket No. T–033, U.S. Department of Labor, Room N–2625, 200 Constitution Avenue NW., Washington, DC 20210. Written submissions must clearly identify the issues which are addressed and the positions taken with respect to each issue. Comments limited to 10 pages or fewer may also be transmitted by FAX to: (202) 693–1648, provided that the original and one copy of the comment are sent to the Docket Office immediately thereafter. Electronic comments may be submitted on the Internet at: *http://www.osha-slc.gov/e-comments/e-comments-nevada.html.* The State of Nevada will be afforded the opportunity to respond to each submission.

Pursuant to 29 CFR 1902.39(f), interested persons may request an informal hearing concerning the proposed section 18(e) determination. Such requests also must be received on or before December 16, 1999, and should be submitted in duplicate to the Docket Officer, Docket T–033, at the address noted above. Such requests must present particularized written objections to the proposed section 18(e) determination. The Assistant Secretary will decide within 30 days of the last day for filing written views or comments and requests for a hearing whether the objections raised are substantial and, if so, will publish notice of the time and place of the scheduled hearing.

The Assistant Secretary will, within a reasonable time after the close of the comment period or after the certification of the record if a hearing is held, publish his decisions in the **Federal Register.** All written and oral

submissions, as well as other information gathered by OSHA, will be considered in any action taken. The record of this proceeding, including written comments and requests for hearing and all materials submitted in response to this notice and at any subsequent hearing, will be available for inspection and copying in the Docket Office, Room N–2625, at the previously mentioned address, between the hours of 8:15 a.m and 4:45 p.m.

Federalism

Executive Order 13132, ''Federalism,'' emphasizes consultation between Federal agencies and the States and establishes specific review procedures the Federal government must follow as it carries out policies which affect State or local governments. This Executive Order does not take effect until November 2, 1999, but will be in effect when OSHA renders its decision on final approval of the Nevada state plan. OSHA has included in the Background section of today's request for public comments a detailed explanation of the relationship between Federal OSHA and the State plan States under the Occupational Safety and Health Act. Although it appears that the specific consultation procedures provided in section 6 of Ex.Ord. 13132 are not mandatory for final approval decisions under the OSH Act, which neither impose a burden upon the State nor involve preemption of any State law, OSHA has nonetheless consulted extensively with Nevada throughout the period of 18(e) evaluation. OSHA has reviewed the Nevada final approval decision proposed today, and believes it is consistent with the principles and criteria set forth in the Executive Order.

Regulatory Flexibility Act

OSHA certifies pursuant to the Regulatory Flexibility Act of 1980 (5 U.S.C. 601 *et seq.*) that this determination will not have a significant economic impact on a substantial number of small entities. Final approval would not place small employers in Nevada under any new or different requirements, nor would any additional burden be placed upon the State government beyond the responsibilities already assumed as part of the approved plan.

List of Subjects in 29 CFR Part 1952

Intergovernmental relations, Law enforcement, Occupational safety and health.

(Sec. 18, 84 Stat. 1608 (29 U.S.C. 667): 29 CFR Part 1902, Secretary of Labor's Order No. 9–83 (43 FR 35736)).

Signed at Washington, DC, this 5th day of November, 1999.

Charles N. Jeffress,

Assistant Secretary of Labor.

[FR Doc. 99–29723 Filed 11–15–99; 8:45 am]

BILLING CODE 4510–26–P

ENVIRONMENTAL PROTECTION AGENCY

40 CFR Part 51

[FRL–6475–9]

Additional Flexibility Amendments to Vehicle Inspection Maintenance Program Requirements; Reopening of Comment Period

AGENCY: Environmental Protection Agency.

ACTION: Reopening of comment period.

SUMMARY: This document reopens the public comment period for above-named notice of proposed rulemaking, published Friday, August 20, 1999, at 64 FR 45491–45500. The deadline for public comments is being reopened from the deadline for public comments, September 20, 1999, to November 23, 1999. This reopening is in response to a request received prior to the close of the original comment period.

DATES: Written comments must be received no later than November 23, 1999.

ADDRESSES: Interested parties may submit written comments (in duplicate if possible) to Public Docket No. A–99–19. It is requested that a duplicate copy be submitted to David Sosnowski at the address in the **FOR FURTHER INFORMATION CONTACT** section below. The docket is located at the Air Docket, Room M–1500 (6102), Waterside Mall S.W., Washington, DC 20460. The docket may be inspected between 8:30 a.m. and 12 noon and between 1:30 p.m. until 3:30 p.m. on weekdays. A reasonable fee may be charged for copying docket material.

FOR FURTHER INFORMATION CONTACT: David Sosnowski, Office of Mobile Sources, Regional and State Programs Division, 2000 Traverwood, Ann Arbor, Michigan, 48105. Telephone (734) 214-4823.

List of Subjects in 40 CFR Part 51

Environmental protection, Administrative practice and procedure, Air pollution control, Carbon monoxide, Transportation.

Dated: November 2, 1999.

Robert Perciasepe,

Assistant Administrator for Air and Radiation.

[FR Doc. 99–29894 Filed 11–15–99; 8:45 am]

BILLING CODE 6560–50–P

ENVIRONMENTAL PROTECTION AGENCY

40 CFR Part 62

[NE 086–1086b; FRL–6473–7]

Approval and Promulgation of State Plans for Designated Facilities and Pollutants; Control of Emissions From Hospital/Medical/Infectious Waste Incinerators (HMIWIs); State of Nebraska

AGENCY: Environmental Protection Agency (EPA).

ACTION: Proposed rule.

SUMMARY: EPA proposes to approve the state of Nebraska's section 111(d) plan for controlling emissions from existing HMIWIs. The plan was submitted to fulfill the requirements of sections 111 and 129 of the Clean Air Act. The state plan establishes emission limits and controls for sources constructed on or before June 20, 1996.

In the final rules section of the **Federal Register**, EPA is approving the state's submittal as a direct final rule without prior proposal because the Agency views this as a noncontroversial action and anticipates no relevant adverse comments. A detailed rationale for the approval is set forth in the direct final rule. If no relevant adverse comments are received in response to this rule, no further activity is contemplated, and the direct final rule will become effective. If EPA receives relevant adverse comments, the direct final rule will be withdrawn, and all public comments received will be addressed in a subsequent final rule based on this proposed rule. EPA will not institute a second comment period on this document. Any parties interested in commenting on this document should do so at this time.

DATES: Comments must be received in writing by December 16, 1999.

ADDRESSES: Comments may be mailed to Wayne Kaiser, Environmental Protection Agency, Air Planning and Development Branch, 901 North 5th Street, Kansas City, Kansas 66101.

FOR FURTHER INFORMATION CONTACT: Wayne Kaiser at (913) 551–7603.

SUPPLEMENTARY INFORMATION: See the information provided in the direct final rule which is located in the rules section of the **Federal Register**.

Authority: 42 U.S.C. 7401 *et seq.*

Dated: October 20, 1999.

Dennis Grams,

Regional Administrator, Region VII.

[FR Doc. 99–29583 Filed 11–15–99; 8:45 am]

BILLING CODE 6560–50–P

ENVIRONMENTAL PROTECTION AGENCY

40 CFR Part 62

[Docket No. VT–016–1220b; FRL–6473–9]

Approval and Promulgation of State Plans For Designated Facilities and Pollutants: Vermont; Negative Declaration

AGENCY: Environmental Protection Agency (EPA).

ACTION: Proposed rule.

SUMMARY: The Environmental Protection Agency (EPA) proposes to approve the Sections 111(d)/129 negative declaration submitted by the Vermont Agency of Natural Resources (ANR) on April 16, 1999. This negative declaration adequately certifies that there are no hospital/medical/infectious waste incinerators (HMIWIs) located within the boundaries of the state of Vermont.

Under Section 111(d) of the Clean Air Act, EPA published regulations at 40 CFR Part 60, Subpart B which require states to submit control plans to control emissions of designated pollutants from designated facilities. In the event that a state does not have a particular designated facility located within its boundaries, EPA requires that a negative declaration be submitted in lieu of a control plan.

The Vermont ANR submitted the negative declaration to satisfy the requirements of 40 CFR Part 60, Subpart B. In the Final Rules Section of this **Federal Register**, EPA is approving the Vermont negative declaration as a direct final rule without a prior proposal. EPA is doing this because the Agency views this action as a noncontroversial submittal and anticipates that it will not receive any significant, material, and adverse comments. A detailed rationale for the approval is set forth in the direct final rule. If EPA does not receive any significant, material, and adverse comments to this action, then the approval will become final without further proceedings. If EPA receives adverse comments, the direct final rule will be withdrawn and EPA will address all public comments received in a subsequent final rule based on this proposed rule. EPA will not begin a second comment period.

DATES: EPA must receive comments in writing by December 16, 1999.

ADDRESSES: You should address your written comments to: Mr. Brian Hennessey, Acting Chief, Air Permits Unit, Office of Ecosystem Protection, U.S. EPA, One Congress Street, Suite 1100 (CAP), Boston, Massachusetts 02114–2023.

Copies of documents relating to this proposed rule are available for public inspection during normal business hours at the following location. The interested persons wanting to examine these documents should make an appointment with the appropriate office at least 24 hours before the day of the visit.

Environmental Protection Agency, Air Permits Unit, Office of Ecosystem Protection, Suite 1100 (CAP), One Congress Street, Boston, Massachusetts 02114–2023.

FOR FURTHER INFORMATION CONTACT: John Courcier, Office of Ecosystem Protection (CAP), EPA-New England, Region 1, Boston, Massachusetts 02203, (617) 918–1659, or by e-mail at *courcier.john@epa.gov*. While the public may forward questions to EPA via e-mail, it must submit comments on this proposed rule according to the procedures outlined above.

SUPPLEMENTARY INFORMATION: See the information provided in the Direct Final action of the same title which is found in the Rules Section of this **Federal Register**.

Dated: November 1, 1999.

John P. DeVillars,

Regional Administrator, Region 1.

[FR Doc. 99–29760 Filed 11–15–99; 8:45 am]

BILLING CODE 6560–50–P

ENVIRONMENTAL PROTECTION AGENCY

40 CFR Parts 152 and 156

[OPP–300890A; FRL–6393–8]

RIN 2070–AD14

Registration Requirements for Antimicrobial Pesticide Products and Other Pesticide Regulatory Changes; Extension of Comment Period

AGENCY: Environmental Protection Agency (EPA).

ACTION: Proposed rule; extension of comment period.

SUMMARY: EPA is extending the comment period for its antimicrobial procedures proposal in response to requests from commenters. This proposal, among other things, would establish procedures for the registration of antimicrobial pesticides and performance standards for public health antimicrobial pesticides. It would also make other changes affecting all pesticide products, including interpretation of new provisions relating to nitrogen stabilizers, and updating and reorganization of human hazard labeling requirements.

DATES: Comments, identified by the docket control number OPP–300890, must be received on or before January 18, 2000.

ADDRESSES: Comments may be submitted by mail, electronically, or in person. Please follow the detailed instructions for each method as provided in Unit I. of the ''SUPPLEMENTARY INFORMATION.'' To ensure proper receipt by EPA, it is imperative that you identify docket control number OPP–300890 in the subject line on the first page of your response.

FOR FURTHER INFORMATION CONTACT: Jean M. Frane, Field and External Affairs Division (7506C), Office of Pesticide Programs, Environmental Protection Agency, 401 M St., SW., Washington, DC 20460; telephone number: 703–305–5944; e-mail address: frane.jean@epa.gov.

SUPPLEMENTARY INFORMATION:

I. General Information

A. Does this Action Apply to Me?

You may be potentially affected by this action if you are a producer or registrant of pesticides, particularly antimicrobial pesticides. Potentially affected categories and entities may include, but are not limited to:

Categories	NAICS codes	Examples of potentially affected entities
Producers	32532 32551 32561 32531 32519	Pesticide products Antifoulant paints Antimicrobial pesticides Nitrogen stabilizers Wood preservatives
Wholesalers	42291 42269	Pesticide products Antimicrobial products

This listing is not intended to be exhaustive, but rather provides a guide for readers regarding entities likely to be affected by this action. Other types of

entities not listed in this table could also be affected. The North American Industrial Classification System (NAICS) codes are provided to assist you and others in determining whether or not this action might apply to certain entities. If you have questions regarding the applicability of this action to a particular entity, consult the person listed under ''FOR FURTHER INFORMATION CONTACT.''

B. How Can I Get Additional Information, Including Copies of this Document and Other Related Documents?

1. *Electronically*. You may obtain electronic copies of this document, and certain other related documents that might be available electronically, from the EPA Internet Home Page at http://www.epa.gov/. On the Home Page select ''Laws and Regulations'' and then look up the entry for this document under the ''**Federal Register**—Environmental Documents.'' You can also go directly to the Federal Register listings at http://www.epa.gov/fedrgstr/.

2. *In person*. The Agency has established an official record for this action under docket control number OPP–300890. The official record consists of the documents specifically referenced in this action, any public comments received during an applicable comment period, and other information related to this action, including any information claimed as Confidential Business Information (CBI). This official record includes the documents that are physically located in the docket, as well as the documents that are referenced in those documents. The public version of the official record does not include any information claimed as CBI. The public version of the official record, which includes printed, paper versions of any electronic comments submitted during an applicable comment period, is available for inspection in the Public Information and Records Integrity Branch (PIRIB), Rm. 119, Crystal Mall #2, 1921 Jefferson Davis Hwy., Arlington, VA, from 8:30 a.m. to 4 p.m., Monday through Friday, excluding legal holidays. The PIRIB telephone number is (703) 305–5805.

C. How and to Whom Do I Submit Comments?

As described in Unit I. of the proposed rule published in the **Federal Register** of September 17, 1999 (64 FR 50672) (FRL–5770–6), you may submit your comments through the mail, in person, or electronically. Please follow the instructions that are provided in the proposed rule. Do not submit any information electronically that you consider to be CBI. To ensure proper receipt by EPA, be sure to identify docket control number OPP–300890 in the subject line on the first page of your response.

D. How Should I Handle CBI that I Want to Submit to the Agency?

Do not submit any information electronically that you consider to be CBI. You may claim information that you submit to EPA in response to this document as CBI by marking any part or all of that information as CBI. Information so marked will not be disclosed except in accordance with procedures set forth in 40 CFR part 2. In addition to one complete version of the comment that includes any information claimed as CBI, a copy of the comment that does not contain the information claimed as CBI must be submitted for inclusion in the public version of the official record. Information not marked confidential will be included in the public version of the official record without prior notice. If you have any questions about CBI or the procedures for claiming CBI, please consult the person listed under ''FOR FURTHER INFORMATION CONTACT.''

E. What Should I Consider as I Prepare My Comments for EPA?

You may find the following suggestions helpful for preparing your comments:

1. Explain your views as clearly as possible.
2. Describe any assumptions that you used.
3. Provide copies of any technical information and/or data you used that support your views.
4. If you estimate potential burden or costs, explain how you arrived at the estimate that you provide.
5. Provide specific examples to illustrate your concerns.
6. Offer alternative ways to improve the proposed rule or collection activity.
7. Make sure to submit your comments by the deadline in this proposed rule extension.
8. To ensure proper receipt by EPA, be sure to identify the docket control number assigned to this action in the subject line on the first page of your response. You may also provide the name, date, and **Federal Register** citation.

II. Background

EPA is extending the comment period for its proposed rule on antimicrobial pesticide registration procedures and other pesticide regulatory changes. The original comment period would have closed on November 16, 1999. EPA has received requests from several commenters to extend the comment period. The commenters requested an additional 30–90 days for comment, citing the length and complexity of the proposal as the basis for their requests.

Based upon these requests, EPA has decided to extend the comment period until January 18, 2000.

III. Do Any Regulatory Assessment Requirements Apply to this Action?

No. This action is not a rulemaking, it merely extends the date by which public comments must be submitted to EPA on a proposed rule that previously published in the **Federal Register** of September 17, 1999 (64 FR 50672) (FRL–5770–6). For information about the applicability of the regulatory assessment requirements to that proposed rule, which published in the **Federal Register**, please refer to the discussion in Unit I. of that document.

List of Subjects in 40 CFR Parts 152 and 156

Administrative practice and procedures, Environmental protection, Labeling, Occupational safety and health, Pesticides and pests, Reporting and recordkeeping requirements.

Dated: November 8, 1999.

Susan H. Wayland,

Deputy Assistant Administrator for Prevention, Pesticides and Toxic Substances.

[FR Doc. 99–29899 Filed 11–15–99; 8:45 am]

BILLING CODE 6560–50–F

GENERAL SERVICES ADMINISTRATION

41 CFR Parts 101–43 and 102–36

RIN 3090–AF39

[FPMR Amendment H-]

Transfer of Excess Personal Property

AGENCY: Office of Governmentwide Policy, GSA.

ACTION: Proposed rule.

SUMMARY: The General Services Administration (GSA) is revising Federal Property Management Regulations (FPMR) coverage on Government property management policies and moving it into the Federal Management Regulation (FMR). A cross-reference will be added to the FPMR to direct readers to the coverage in the FMR. The FMR coverage is written in plain language and will provide agencies with updated regulatory material that is easy to read and understand.

DATES: Your comments must reach us by December 16, 1999 to be considered in the formulation of a final rule.

ADDRESSES: Send written comments to: Ms. Sharon A. Kiser, Regulatory Secretariat (MVRS), Federal Acquisition Policy Division, General Services Administration, 1800 F Street, NW, Washington, DC 20405.

Send comments by e-mail to: *RIN.3090–AF39@gsa.gov*.

FOR FURTHER INFORMATION CONTACT: Martha Caswell, Director, Personal Property Management Policy Division (MTP), 202–501–3828.

SUPPLEMENTARY INFORMATION:

A. Background

The purpose of this proposed rule is to update, streamline, and clarify FPMR part 101–43 and move the part into the Federal Management Regulation (FMR). The proposed rule is written in a plain language question and answer format. This style uses an active voice, shorter sentences, and pronouns. Unless otherwise indicated in the text, the pronouns ''we'', ''you'', and their variants refer to the agency. A question and its answer combine to establish a rule. The employee and the agency must follow the language contained in both the question and its answer.

GSA has removed the term ''Trust Territory of the Pacific Islands'' from the definition of ''foreign excess personal property'' because there are no longer any entities in the Trust Territory of the Pacific Islands. As of October 1, 1994, Palau, the last remaining entity in the Trust Territory, became a self-governing sovereign state in free association with the United States.

B. Executive Order 12866

GSA has determined that this proposed rule is not a significant rule for the purposes of Executive Order 12866 of September 30, 1993.

C. Regulatory Flexibility Act

The proposed rule is not expected to have a significant economic impact on a substantial number of small entities within the meaning of the Regulatory Flexibility Act, 5 U.S.C. 601, *et seq.*

D. Paperwork Reduction Act

The Paperwork Reduction Act does not apply because this proposed rule does not contain any information collection requirements that require the approval of the Office of Management and Budget (OMB).

E. Small Business Regulatory Enforcement Fairness Act

This proposed rule is exempt from Congressional review prescribed under 5 U.S.C. 801 since it relates solely to agency management and personnel.

List of Subjects in 41 CFR Parts 101–43 and 102–36

Government property management, Surplus Government property.

For the reasons set forth in the preamble, GSA proposes to amend 41 CFR chapters 101 and 102 as follows:

CHAPTER 101—[AMENDED]

1. Part 101–43 is revised to read as follows:

PART 101–43—UTILIZATION OF PERSONAL PROPERTY

Authority: Sec. 205(c), 63 Stat. 390; 40 U.S.C. 486(c).

§ 101–43.000 Cross-reference to the Federal Management Regulation (FMR) (41 CFR chapter 102, parts 102–1 through 102–220).

For information previously contained in this part, see FMR part 36 (41 CFR 102–36).

CHAPTER 102—[AMENDED]

2. Part 102–36 is added to subchapter B to read as follows:

PART 102–36—TRANSFER OF EXCESS PERSONAL PROPERTY

Subpart A—General Provisions

Sec.

102–36.5 What does this part cover?
102–36.10 What is the governing authority for this part?
102–36.15 Who must comply with the provisions of this part?
102–36.20 How do we request a deviation from these requirements and who can approve it?
102–36.25 What is the typical process for transfer and disposing of excess personal property?

Definitions

102–36.30 What definitions apply to this part?

Responsibility

102–36.35 What are our responsibilities in the management of excess personal property?
102–36.40 May we use a contractor to perform the functions of excess personal property disposal?
102–36.45 What is GSA's role in the disposition of excess personal property?

Subpart B—Acquiring Excess Personal Property for Our Agency

Acquiring Excess

102–36.50 Who is eligible to acquire excess personal property?
102–36.55 Why must we use excess personal property instead of buying new property?
102–36.60 What must we consider when acquiring excess personal property?
102–36.65 Do we pay for excess personal property we acquire under a transfer?
102–36.70 How much do we pay for excess personal property on a transfer with reimbursement?
102–36.75 Do we pay for personal property disposed of under the exchange/sale authority, and how much do we pay?

Screening of Excess

102–36.80 How do we find out what personal property is available as excess?
102–36.85 How long is excess personal property available for screening?
102–36.90 When does the screening period start for excess personal property?
102–36.95 Where do we go to screen excess personal property on-site?
102–36.100 Who is authorized to screen excess personal property and what paperwork do we need?
102–36.105 What must we include in the letter of authorization for a non-Federal person to screen excess personal property?
102–36.110 What are our responsibilities in authorizing a non-Federal individual to screen excess personal property?

Processing Transfers

102–36.115 How do we process a Standard Form 122 (SF 122), Transfer Order Excess Personal Property, through GSA?
102–36.120 What are our responsibilities in processing transfer orders of excess personal property?
102–36.125 How much time do we have to pick up excess personal property that has been approved for transfer?
102–36.130 May we arrange to have the excess personal property shipped to its final destination?

Direct Transfers

102–36.135 May we obtain excess personal property directly from another Federal agency without GSA approval?

Subpart C—Acquiring Excess Personal Property for Non-Federal Recipients

102–36.140 For which non-Federal activities may we acquire excess personal property?
102–36.145 What are our responsibilities when acquiring excess personal property for use by a non-Federal recipient?
102–36.150 Must we provide additional information on the SF 122 when acquiring excess personal property for non-Federal recipients?

Nonappropriated Fund Activities

102–36.155 Do we retain title to excess personal property furnished to a nonappropriated fund activity within our agency?
102–36.160 May we transfer personal property owned by a nonappropriated fund activity?

Contractors

102–36.165 What are the requirements for acquiring excess personal property for use by a cost reimbursable contractor?
102–36.170 Are there restrictions to acquiring excess personal property for use by our cost reimbursable contractors?

Cooperatives

102–36.175 Is there any limitation/condition to acquiring excess personal property for use by cooperatives?

Project Grantees

102–36.180 What are the requirements for acquiring excess personal property for use by our grantees?
102–36.185 What type of excess personal property may we furnish to our project grantees?
102–36.190 May we acquire excess personal property for cannibalization purposes by the grantee?
102–36.195 Is there a limit to how much excess personal property we may furnish to our grantees?
102–36.200 Must we always pay 25 percent of the original acquisition cost when furnishing excess personal property to project grantees?
102–36.205 Does the Government retain title to excess personal property furnished to project grantees?

Subpart D—Disposition of Excess Personal Property

102–36.210 When is personal property excess?
102–36.215 Why must we report excess personal property to GSA?

Reporting Excess Personal Property

102–36.220 How do we report excess personal property?
102–36.225 Must we report all excess personal property to GSA?
102–36.230 Must we report excess personal property that is attached to real property?
102–36.235 Where do we send the reports of excess personal property?
102–36.240 What information do we provide when reporting excess personal property?
102–36.245 What are the disposal condition codes?

Disposing of Excess Personal Property

102–36.250 Are we accountable for the personal property that has been reported excess?
102–36.255 Does GSA ever take physical custody of excess personal property?
102–36.260 What options do we have when unusual circumstances do not allow adequate time for disposal through GSA?
102–36.265 How do we promote the expeditious transfer of excess personal property?
102–36.270 What if there are competing requests for the same excess item?
102–36.275 What if a Federal agency requests excess personal property that is in donation screening or in the sales process?
102–36.280 May we dispose of excess personal property without GSA approval?
102–36.285 May we withdraw from the disposal process excess personal property that we have reported to GSA?

Transfers With Reimbursement

102–36.290 May we charge for excess personal property transferred to another Federal agency?
102–36.295 How much do we charge for excess personal property on a transfer with reimbursement?

Report of Disposal Activity

102–36.300 Must we report the disposition of excess personal property to GSA?
102–36.305 How do we report the disposition of excess personal property?

Abandonment/Destruction

102–36.310 May we abandon or destroy excess personal property without reporting it to GSA?
102–36.315 Who makes the determination to abandon or destroy excess personal property?
102–36.320 Are there any prohibitions or exceptions to the use of the abandonment/destruction authority?
102–36.325 What must be done before abandoning/destroying excess personal property?
102–36.330 Must we always provide public notice regarding abandonment/destruction of excess personal property?

Subpart E—Property Whose Disposal Requires Special Handling

102–36.335 Are there certain types of excess personal property that must be disposed of differently?

Aircraft and Aircraft Parts

102–36.340 What must we do when disposing of excess aircraft?
102–36.345 What is a Flight Safety Critical Aircraft Part (FSCAP)?
102–36.350 How do we identify a FSCAP?
102–36.355 What are the FSCAP Criticality Codes?
102–36.360 What must we do when disposing of excess FSCAP?
102–36.365 How do we dispose of aircraft parts that have no FSCAP designation?

Canines, Law Enforcement

102–36.370 May we transfer or donate canines that have been used in the performance of law enforcement duties?

Disaster Relief Property

102–36.375 Are there special requirements concerning the use of excess personal property for disaster relief?

Firearms

102–36.380 Are there special requirements for disposing of excess firearms?

Foreign Excess Personal Property

102–36.385 What is foreign excess personal property?
102–36.390 Who is responsible for disposing of foreign excess personal property?
102–36.395 How may we dispose of foreign excess personal property overseas?
102–36.400 What are our responsibilities in the disposal of foreign excess personal property?
102–36.405 How may GSA assist us in disposing of foreign excess personal property?
102–36.410 Who pays for the transportation costs when foreign excess personal property is returned to the United States?

Gifts

102–36.415 May we keep gifts given to us from the public?
101–36.420 How do we dispose of a gift in the form of money or intangible personal property?
102–36.425 How do we dispose of gifts other than money or intangible personal property?
102–36.430 How do we dispose of gifts from foreign governments or entities?

Hazardous Personal Property

102–36.435 What is hazardous personal property?
102–36.440 May we dispose of excess hazardous personal property?

Munitions List Items/Commerce Control List Items (MLIs/CCLIs)

102–36.445 What are MLIs?
102–36.450 What are CCLIs?
102–36.455 May we dispose of excess MLIs/CCLIs?
102–36.460 What is demilitarization (DEMIL)?
102–36.465 How do we identify MLIs/CCLIs requiring demilitarization?

Printing Equipment and Supplies

102–36.470 Are there special procedures for reporting printing and binding equipment and supplies?

Scrap

102–36.475 May we abandon/destroy scrap?

Shelf-Life Items

102–36.480 What is a shelf-life item?
102–36.485 Do we report excess shelf-life items?
102–36.490 How do we report excess shelf-life items?
102–36.495 Do we report excess medical shelf-life items held for national emergency purposes?
102–36.500 May we transfer or exchange excess medical shelf-life items with other Federal agencies?

Vessels

102–36.505 What must we do when disposing of vessels?

Subpart F—Miscellaneous Disposition

102–36.510 What is the authority for transfers under ''Computers for Learning''?

Authority: 40 U.S.C. 486(c).

Subpart A—General Provisions

§ 102–36.5 What does this part cover?

This part covers the acquisition, transfer and disposal, by executive agencies, of excess personal property located in the United States, the District of Columbia, the U.S. Virgin Islands,

American Samoa, Guam, the Commonwealth of Puerto Rico, and the Commonwealth of the Northern Mariana Islands.

§ 102–36.10 What is the governing authority for this part?

Section 202 of the Federal Property and Administrative Services Act of 1949, as amended (the Property Act) (40 U.S.C. 483), authorizes the General Services Administration (GSA) to prescribe policies to promote the maximum use of excess Government personal property by executive agencies.

§ 102–36.15 Who must comply with the provisions of this part?

All executive agencies must comply with the provisions of this part. The legislative and judicial branches are encouraged to report and transfer excess personal property and fill their personal property requirements from excess in accordance with these provisions.

§ 102–36.20 How do we request a deviation from these requirements and who can approve it?

See § § 102–2.60 through 102–2.110 of this chapter to request a deviation from the requirements of this part.

§ 102–36.25 What is the typical process for transfer and disposing of excess personal property?

(a) You must first offer personal property not needed by your activity for use elsewhere within your agency. If the property is no longer needed by any activity within your agency, your agency declares the property excess and reports it to GSA for possible transfer to eligible recipients, including Federal agencies for direct use or for use by their contractors, project grantees, or cooperative agreement recipients. All executive agencies must, to the maximum extent practicable, fill requirements for personal property by using existing agency property or by obtaining excess property from other Federal agencies in lieu of new procurements.

(b) If GSA determines that there are no Federal requirements for your excess property, it becomes surplus property and is available for donation to State and local public agencies and other eligible non-Federal activities. The Property Act requires that surplus personal property be distributed to eligible recipients by an agency established by each State for this purpose, the State Agency for Surplus Property.

(c) Surplus personal property not selected for donation is offered for sale to the public by competitive offerings such as sealed bid sales, spot bid sales or auctions. You may conduct or contract for the sale of your surplus personal property, or have GSA conduct the sale on behalf of your agency. You must inform GSA at the time the property is reported as excess if you choose to sell your own surplus property or have GSA sell it for you.

(d) If a written determination is made that the property has no commercial value or the estimated cost of its continued care and handling would exceed the estimated proceeds from its sale, you may dispose of the property by abandonment or destruction, or donate it to public bodies in accordance with § § 102–36.310 through 102–36.330.

Definitions

§ 102–36.30 What definitions apply to this part?

The following definitions apply to this part:

Cooperative means the organization or entity that has a cooperative agreement with an executive agency.

Cooperative agreement means a legal instrument reflecting a relationship between an executive agency and a non-Federal recipient, made in accordance with the Federal Grant and Cooperative Agreement Act of 1977 (31 U.S.C. 6301–6308), under any or all of the following circumstances:

(1) The purpose of the relationship is the transfer of money, property, services, or anything of value to accomplish a public purpose authorized by law, rather than by purchase, lease, or barter, for the direct benefit or use of the Federal Government.

(2) Substantial involvement is anticipated between the executive agency and the cooperative during the performance of the agreed upon activity.

(3) The cooperative is a State or local government entity or any person or organization authorized to receive Federal assistance or procurement contracts.

Cost-reimbursement contract means a contract in which allowable costs incurred by the contractor in the performance of the contract are reimbursed to the contractor.

Excess personal property (excess) means any personal property under the control of any Federal agency which is no longer required for that agency's needs, as determined by the agency head or designee.

Executive agency means any executive department or independent establishment in the executive branch of the Government, including any wholly owned Government corporation.

Fair market value means the best estimate of the gross sales proceeds if the property were to be sold in a public sale.

Federal agency means any executive agency or any establishment in the legislative or judicial branch of the Government (except the Senate, the House of Representatives, and the Architect of the Capitol and any activities under his/her direction).

Federal Disposal System (FEDS) is GSA's automated excess personal property system, accessible at https://feds.fss.gsa.gov/scripts/ihpsmain.dll?emul

Grant means a type of assistance award and a legal instrument which permits an executive agency to transfer money, property, services or other things of value to a grantee when no substantial involvement is anticipated between the agency and the recipient during the performance of the contemplated activity.

Holding agency means the Federal agency having accountability for, and generally possession of, the property involved.

Life-limited part means an aircraft part that has a finite service life expressed in either total operating hours, total cycles, and/or calendar time.

Line item means a single line entry, on a reporting form or transfer order, for items of property of the same type having the same description, condition code, and unit cost.

Nonappropriated fund activity means an activity or entity that is not funded by money appropriated from the general fund of the U.S. Treasury, such as post exchanges, ship stores, military officers' clubs, veterans' canteens, and similar activities.

Personal property means any property, except real property, records of the Federal Government, and naval vessels of the following categories: battleships, cruisers, aircraft carriers, destroyers, and submarines.

Project grant means a grant made for a specific purpose and with a specific termination date.

Property Act means the Federal Property and Administrative Services Act of 1949 (63 Stat. 386), as amended.

Public agency means any State, political subdivision thereof, including any unit of local government or economic development district; any department, agency, or instrumentality thereof, including instrumentalities created by compact or other agreement between States or political subdivisions; multijurisdictional substate districts established by or pursuant to State law; or any Indian tribe, band, group, pueblo, or community located on a State reservation.

Reimbursable transfer (transfer with reimbursement) means a transfer of excess personal property between Federal agencies where the recipient is required to pay, i.e. reimburse the holding agency, for the cost of the property.

Related personal property means any personal property that is an integral part of real property. It is:

(1) Related to, designed for, or specifically adapted to the functional capacity of the real property and removal of this personal property would significantly diminish the economic value of the real property; or

(2) Determined by the Administrator of General Services to be related to the real property.

Salvage means property that has value greater than its basic material content but for which repair or rehabilitation is clearly impractical and/or uneconomical.

Scrap means property that has no value except for its basic material content.

Screening period means the period in which excess and surplus personal property are made available for excess transfer or surplus donation to eligible recipients.

Surplus personal property (surplus) means excess personal property no longer required by a Federal agency as determined by GSA.

Surplus release date means the date when Federal screening has been completed and the excess property becomes surplus and is available for donation.

Unit cost means the original acquisition cost of a single item of property.

United States means all the 50 States and the District of Columbia.

Vessels means ships, boats and craft designed for navigation in and on the water, propelled by oars or paddles, sail, or power.

Responsibility

§ 102–36.35 What are our responsibilities in the management of excess personal property?

(a) Your senior procurement official must make sure that your agency's procurement policies require consideration of excess personal property before authorizing procurement of new personal property.

(b) You may designate an authorized agency official to promote the use of available excess to the maximum extent practicable by your agency and to review and approve the acquisition and disposition of excess personal property.

(c) When acquiring excess personal property, you must:

(1) Limit the quantity acquired to that which is needed to adequately perform the function necessary to support the mission of the agency.

(2) Establish controls over the processing of transfer orders.

(3) Facilitate the timely pickup of acquired excess personal property from the holding agency.

(d) While personal property is in your custody, or the custody of authorized non-Federal recipients that you sponsor, you must do the following:

(1) Establish and maintain a system for property accountability.

(2) Protect the property against hazards including but not limited to fire, theft, vandalism, and weather.

(3) Perform the care and handling of personal property.

(4) Maintain appropriate inventory levels as set forth in part 101–27 of this title.

(5) Continuously monitor the property under your control to assure maximum use, and develop and maintain a system to prevent and detect nonuse, improper use, unauthorized disposal or destruction of personal property.

(e) When you no longer need personal property to carry out the mission of a program, you must:

(1) Offer the property for reassignment to other activities within the agency.

(2) Promptly report excess personal property to GSA when it is no longer needed by any activity within your agency for further reuse by eligible recipients.

(3) Continue the care and handling of excess personal property while it goes through the disposal process.

(4) Facilitate the timely transfer of excess personal property to other Federal agencies or authorized eligible recipients.

(5) Provide reasonable access to authorized personnel for inspection and removal of excess personal property.

(6) Ensure that final disposition complies with applicable environmental, health, safety and national security regulations.

§ 102–36.40 May we use a contractor to perform the functions of excess personal property disposal?

Yes. You may use service contracts to perform functions that are not inherently Governmental. You are responsible for ensuring that the contractor conforms with the requirements of the Property Act and the FMR and any other applicable statutes when performing these functions.

§ 102–36.45 What is GSA's role in the disposition of excess personal property?

In addition to developing and issuing regulations for the management of excess personal property, GSA:

(a) Screens and offers available excess personal property to Federal agencies and eligible non-Federal recipients.

(b) Approves and processes transfers of excess personal property to eligible activities.

(c) Determines the amount of reimbursement for transfers of excess personal property when appropriate.

(d) Conducts sales of surplus and exchange/sale property when requested by an agency.

(e) Maintains an automated system, FEDS, to facilitate the reporting/transferring of excess personal property.

Subpart B—Acquiring Excess Personal Property For Our Agency

Acquiring Excess

§ 102–36.50 Who is eligible to acquire excess personal property?

The following are eligible to acquire excess personal property:

(a) Federal agencies (for their own use or use by their authorized cost-reimbursement contractors, cooperatives, and project grantees.).

(b) The Senate.

(c) The House of Representatives.

(d) The Architect of the Capitol and any activities under his direction.

(e) The municipal government of the District of Columbia.

(f) Mixed-ownership Government corporations as defined in 31 U.S.C. 9101.

§ 102–36.55 Why must we use excess personal property instead of buying new property?

Using excess personal property to the maximum extent practicable maximizes the return on Government dollars spent and minimizes expenditures for new procurement. Before purchasing new property, check with the appropriate regional GSA Personal Property Management office or access FEDS for any available excess that may be suitable for your needs. You must use excess personal property unless it would cause serious hardship, be impractical, or impair your operations.

§ 102–36.60 What must we consider when acquiring excess personal property?

Consider the following when acquiring excess personal property:

(a) There must be an authorized requirement.

(b) The cost of acquiring excess personal property (including packing, shipping, pickup, and necessary repairs)

does not exceed the delivered cost of new material.

(c) The sources of spare parts or repair/maintenance services to support the acquired item are readily accessible.

(d) The supply of excess parts acquired must not exceed the life expectancy of the equipment supported.

§ 102–36.65 Do we pay for excess personal property we acquire under a transfer?

(a) No, except for the situations listed in paragraph (b) of this section, you do not pay for the property itself. However, you are responsible for shipping and transportation costs. Where applicable, you may also be required to pay packing, loading, and any costs directly related to the dismantling of the property when required for the purpose of transporting the property.

(b) You are required to reimburse the holding agency for excess personal property transferred to you (transfer with reimbursement) when:

(1) Reimbursement is directed by GSA.

(2) The property was originally acquired with funds, not appropriated from the general fund of the Treasury or appropriated therefrom but by law reimbursable from assessment, tax, or other revenue and the holding agency requires reimbursement. It is the current executive branch policy that working capital fund property shall be transferred without reimbursement.

(3) The property was acquired with appropriated funds, but reimbursement is required by law.

(4) You or the holding agency is the US Postal Service (USPS).

(5) You are acquiring excess personal property for use by a project grantee that is a public agency or a nonprofit organization and exempt from taxation under 26 U.S.C. 501.

(6) You or the holding agency is the DC Government.

(7) You or the holding agency is a wholly owned or mixed-ownership Government corporation as defined in the Government Corporation Control Act (31 U.S.C. 9101–9110).

§ 102–36.70 How much do we pay for excess personal property on a transfer with reimbursement?

(a) You may be required to reimburse the holding agency the fair market value when the transfer involves § 102–36.65 (b)(1) through (b)(4).

(b) When acquiring excess personal property for your project grantees (see § 102–36.65(b)(5)), you are required to deposit into the miscellaneous receipts fund of the U.S. Treasury an amount equal to 25 percent of the original acquisition cost of the property, except for the conditions cited in § 102–36.200.

(c) When you or the holding agency is the DC Government or a wholly owned or mixed-ownership Government corporation (see § 102–36.65(b)(6) or (b)(7)), you are required to reimburse the holding agency using fair value reimbursement. Fair value reimbursement is 20 percent of the original acquisition cost for new or unused property (i.e., condition code 1), and zero percent for other personal property. Where circumstances warrant, a higher fair value may be used if the agencies concerned agree. Due to special circumstances or the unusual nature of the property, the holding agency may use other criteria for establishing fair value if approved or directed by GSA. You must refer any disagreements to the regional GSA Personal Property Management office.

§ 102–36.75 Do we pay for personal property disposed of under the exchange/sale authority, and how much do we pay?

Yes you pay for personal property disposed of under the exchange/sale authority, when the holding agency requires reimbursement. The amount of reimbursement is normally the fair market value.

Screening of Excess

§ 102–36.80 How do we find out what personal property is available as excess?

You may use the following methods to find out what excess personal property is available:

(a) Check GSA's automated excess personal property system FEDS.

(b) Contact or submit want lists to regional GSA Personal Property Management offices.

(c) Check any available holding agency websites (such as *www.drms.dla.mil* for DoD property).

(d) Conduct on-site screening at various Federal facilities.

§ 102–36.85 How long is excess personal property available for screening?

The screening period for excess personal property is normally 21 calendar days. GSA may extend or shorten the screening period in coordination with the holding agency.

§ 102–36.90 When does the screening period start for excess personal property?

Screening starts when GSA receives the report of excess personal property.

§ 102–36.95 Where do we go to screen excess personal property on-site?

You may visit Defense Reutilization and Marketing Offices (DRMOs) and DOD contractor facilities to screen excess personal property generated by the Department of Defense. You may also inspect excess personal property at various civilian agency facilities throughout the United States. Contact your regional GSA Personal Property Management office for locations and accessibility.

§ 102–36.100 Who is authorized to screen excess personal property and what paperwork do we need?

You may authorize an agency employee to screen excess personal property. Authorized employees must present a valid Federal ID when entering the DRMOs or any other Federal facilities. If you authorize a non-Federal individual to screen excess personal property for you or for a non-Federal recipient that you sponsor (see § 102–36.140), he or she will need a letter of authorization from you in addition to a valid picture ID.

§ 102–36.105 What must we include in the letter of authorization for a non-Federal person to screen excess personal property?

You must state that the individual is authorized to screen excess personal property for your agency. The letter of authorization must include:

(a) The individual's name;

(b) The period of time and location(s) in which screening will be conducted; and

(c) The number and completion date of the applicable contract, cooperative agreement, or grant.

§ 102–36.110 What are our responsibilities in authorizing a non-Federal individual to screen excess personal property?

You must do the following:

(a) Ensure that the screener certifies that any property requested is to be used for authorized purpose(s).

(b) Maintain a record of the authorized screeners under your authority.

(c) Recover any expired or invalid letters of authorization.

Processing Transfers

§ 102–36.115 How do we process a Standard Form 122 (SF 122), Transfer Order Excess Personal Property, through GSA?

(a) You must first contact the appropriate regional GSA Personal Property Management office to assure the property is available to you. Submit your request on a SF 122, Transfer Order Excess Personal Property, to the region in which the property is located. For the types of property listed in the table in paragraph (b) of this section, submit the SF 122 to the corresponding GSA regions. You may submit the SF 122 manually or transmit the required information by electronic media (FEDS)

or any other transfer form specified and approved by GSA.

(b) For the following types of property, you must submit the SF 122 to the corresponding GSA regions:

Type of property	GSA region	Location
Aircraft	9 FBP	San Francisco, CA 94102.
Firearms	7 FP–8	Denver, CO 80225.
Foreign Gifts	FBP	Washington, DC 20406.
Forfeited Property	3 FP	Washington, DC 20407.
Standard Forms	7 FMP	Ft. Worth, TX 76102.
Vessels, DOD [a]	3 FP	Philadelphia, PA 19107.
Vessels, civilian [a]	4 FD	Atlanta, GA 30365.

[a] Vessels over 50 ft in length and less than 1,500 gross tons.

§ 102–36.120 What are our responsibilities in processing transfer orders of excess personal property?

Whether the excess is for your use or for use by a non-Federal recipient that you sponsor, you must:

(a) Ensure that only authorized Federal officials of your agency sign the SF 122 prior to submission to GSA for approval.

(b) Ensure that excess personal property approved for transfer is used for authorized program(s).

(c) Provide to GSA a listing of your agency officials authorized to approve a SF 122, and notify GSA of any changes in signatory authority.

§ 102–36.125 How much time do we have to pick up excess personal property that has been approved for transfer?

When the holding agency notifies you that the property is ready for removal, you normally have 15 calendar days to pick up the property, unless otherwise coordinated with the holding agency.

§ 102–36.130 May we arrange to have the excess personal property shipped to its final destination?

Yes, when the holding agency agrees to provide assistance in preparing the property for shipping. However, you may be required to pay the holding agency any direct costs in preparing the property for shipping. You must provide shipping instructions and the appropriate fund code for billing purposes on the SF 122.

Direct Transfers

§ 102–36.135 May we obtain excess personal property directly from another Federal agency without GSA approval?

Yes, but only under the following situations:

(a) You may obtain excess personal property that has not yet been reported to GSA, provided the total acquisition cost of the excess property does not exceed $10,000 per line item. You must ensure that a SF 122 is completed for the direct transfer and that an authorized official of your agency signs the SF 122. You must provide a copy of the SF 122 to GSA within 10 workdays from the date of the transaction.

(b) You may obtain excess personal property exceeding the $10,000 per line item limitation, provided you first contact the appropriate regional GSA Personal Property Management office in which the property is located for oral approval of a prearranged transfer. You must annotate the SF 122 with the name of the GSA approving official and the date of the verbal approval, and provide a copy of the SF 122 to GSA within 10 workdays from the date of transaction.

Subpart C—Acquiring Excess Personal Property for Non-Federal Recipients

§ 102–36.140 For which non-Federal activities may we acquire excess personal property?

You may acquire excess personal property for use by your nonappropriated fund activities, cost-reimbursement contractors, cooperatives, and project grantees.

§ 102–36.145 What are our responsibilities when acquiring excess personal property for use by a non-Federal recipient?

Your authorized agency official must:

(a) Authorize in writing the use of excess personal property by the non-Federal recipient, and approve the transfer documents as the sponsoring Federal agency.

(b) Determine that the use of excess personal property will reduce the costs to the Government or that it is in the Government's best interest to furnish excess.

(c) Ensure the non-Federal recipient will not stockpile the property but will place the property into use within a reasonable period of time, and develop and maintain a system to prevent nonuse, improper use, or unauthorized disposal or destruction of excess personal property furnished.

(d) Establish provisions and procedures for property accountability and disposition in situations when the Government retains title.

(e) Report to GSA annually excess personal property furnished to non-Federal recipients (see § 102–36.300).

§ 102–36.150 Must we provide additional information on the SF 122 when acquiring excess personal property for non-Federal recipients?

Yes. Annotate on the SF 122 the name of the non-Federal recipient, the contract, grant or agreement number when applicable, and the scheduled date of completion/expiration. GSA will not approve the transfer if the contract, grant or agreement is due to expire in less than 60 calendar days, unless you certify that the contract, grant or agreement will be extended or renewed or provide other written justification for the transfer.

Nonappropriated Fund Activities

§ 102–36.155 Do we retain title to excess personal property furnished to a nonappropriated fund activity within our agency?

Yes, title to the property remains with the Federal Government. You must enter such excess personal property on your agency accountable records. When such property is no longer required by the nonappropriated fund activity, you must reuse or dispose of the property in accordance with the regulations of this part.

§ 102–36.160 May we transfer personal property owned by a nonappropriated fund activity?

Property purchased by a nonappropriated fund activity is not Federal property. A nonappropriated fund activity has the option of making its privately owned personal property available for transfer to a Federal agency, usually with reimbursement. Such reimbursable personal property is not available for donation.

Contractors

§ 102–36.165 What are the requirements for acquiring excess personal property for use by a cost reimbursable contractor?

(a) You must ensure that the contract contains provisions to allow the use of Government-furnished property (a Government property clause), and includes safeguards relative to the contractor's authorized use and maintenance, prohibitions against unauthorized use, and required redelivery to Government custody of Government-furnished property.

(b) When such excess personal property is no longer needed for the performance of a contract, you may authorize the contractor to retain the property for continued use on another contract, or reassign the property for re-use by your other contractors or other activities within your agency. When the property is no longer required by your contractors or your agency, you must dispose of the property in accordance with the provisions of this part.

§ 102–36.170 Are there restrictions to acquiring excess personal property for use by our cost reimbursable contractors?

Yes. You may acquire excess personal property for your cost reimbursable contractor's use subject to the restrictions in the Federal Acquisition

Regulation (48 CFR part 45). The Government retains title to such property unless specific statutory authority provides otherwise. You must ensure that your contractors follow the provisions of this part when disposing of excess Government personal property.

Cooperatives

§ 102–36.175 Is there any limitation/condition to acquiring excess personal property for use by cooperatives?

Yes, you must limit the amount of property transfers to the dollar value of the cooperative agreement. For any transfers in excess of such amount, you must ensure that an official of your agency at a level higher than the officer administering the agreement approves the transfer. The Government retains title to such property, except when provided by specific statutory authority.

Project Grantees

§ 102–36.180 What are the requirements for acquiring excess personal property for use by our grantees?

You may furnish excess personal property for use by your grantees only when:

(a) The grantee holds a Federally sponsored project grant;

(b) The grantee is a public agency or a nonprofit tax-exempt organization under section 501 of the Internal Revenue Code of 1986 (26 U.S.C. 501);

(c) The property is for use in connection with the grant; and

(d) You pay 25 percent of the original acquisition cost of the excess personal property, such funds to be deposited into the miscellaneous receipts fund of the U.S. Treasury. Exceptions to paying this 25 percent are provided in § 102–36.200.

§ 102–36.185 What type of excess personal property may we furnish to our project grantees?

You may furnish to your project grantees:

(a) Property determined to be necessary and usable for the purpose of the grant.

(b) Consumable items are generally not transferable. However, GSA may approve transfers of excess consumable items when adequate justification for the transfer accompanies such requests. Consumable items are items that are used up in whole or in part during any use.

§ 102–36.190 May we acquire excess personal property for cannibalization purposes by the grantee?

Yes, subject to GSA approval. You may be required to provide a supporting statement that indicates disassembly of the item for secondary use has greater benefit than utilization of the item in its existing form and cost savings to the Government will result.

§ 102–36.195 Is there a limit to how much excess personal property we may furnish to our grantees?

Yes. You must monitor transfers of excess personal property so the total dollar amount of property transferred does not exceed the dollar value of the grant. Any transfers above the grant amount must be approved by an official at an administrative level higher than the officer administering the grant.

§ 102–36.200 Must we always pay 25 percent of the original acquisition cost when furnishing excess personal property to project grantees?

No. You may acquire excess personal property for use by a project grantee without paying the 25 percent fee under the following conditions:

(a) The personal property was originally acquired from excess sources by your agency and has been placed into official use by your agency for at least 1 year.

(b) The property is not needed for donation under part 101–44 of this title, and is transferred under section 608 of the Foreign Assistance Act of 1961, as amended (22 U.S.C. 2358). (You need not wait until after the donation screening period when furnishing excess personal property to recipients under the Agency for International Development (AID) Development Loan Program.)

(c) The property is furnished under section 203 of the Department of Agriculture Organic Act of 1944 (16 U.S.C. 580a) through the U.S. Forest Service in connection with cooperative State forest fire control programs.

(d) The property is scientific equipment transferred under section 11(e) of the National Science Foundation (NSF) Act of 1950, as amended (42 U.S.C. 1870(e)). GSA will limit such transfers to property within Federal Supply Classification (FSC) groups 12, 14, 43, 48, 58, 59, 65, 66, 67, 68 and 70. GSA may approve transfers without reimbursement for property under other FSC groups when NSF certifies the item is a component of or related to a piece of scientific equipment or is a difficult-to-acquire item needed for scientific research. Regardless of FSC, GSA will not approve transfers of common-use or general-purpose items without reimbursement.

(e) The property is furnished by the U.S. Department of Agriculture to State or county extension services or agricultural research cooperatives under 40 U.S.C. 483(d)(2)(E).

§ 102–36.205 Does the Government retain title to excess personal property furnished to project grantees?

The Government retains title to excess personal property transferred and furnished for use by project grantees under § 102–36.200(a), (c) and (e) unless otherwise provided by specific statutory authority. However, when your agency pays 25 percent of the original acquisition cost of the excess property, your grantee retains title to such property. Such funds shall be deposited into the U.S. Treasury as miscellaneous receipts.

Subpart D—Disposition of Excess Personal Property

§ 102–36.210 When is personal property excess?

Personal property is excess when none of the activities within your agency has a need for the property to carry out the functions of authorized programs, as determined by the agency head or designee.

§ 102–36.215 Why must we report excess personal property to GSA?

You must report excess personal property to promote reuse by the Government to enable Federal agencies to benefit from the continued use of property already paid for with taxpayers' money, thus minimizing new procurement costs. Reporting excess personal property to GSA helps assure that the information on available excess is accessible and disseminated to the widest range of reuse customers.

Reporting Excess Personal Property

§ 102–36.220 How do we report excess personal property?

Report excess personal property as follows:

(a) Electronically submit the Standard Form 120 (SF 120), Report of Excess Personal Property, in a format specified and approved by GSA; or (b) Submit a paper SF 120 to the regional GSA Personal Property Management office.

§ 102–36.225 Must we report all excess personal property to GSA?

(a) Generally yes, regardless of the condition code, except as authorized in § 102–36.280(a) for direct transfers or as exempted in paragraph (b) of this section. Report all excess personal property, including property to which the Government holds title but that is not needed by your contractors, cooperatives, or project grantees.

(b) You are not required to report the following types of property to GSA for screening:

(1) Property determined appropriate for abandonment/destruction (see § 102–36.310).

(2) Nonappropriated fund property (see § 102–36.160).

(3) Foreign excess personal property (see § 102–36.385).

(4) Scrap, except aircraft in scrap condition (see § 102–36.475).

(5) Perishables, defined for the purposes of this section as any personal property subject to spoilage or decay.

(6) Trading stamps and bonus goods.

(7) Hazardous waste.

(8) Controlled substances.

(9) Nuclear Regulatory Commission-controlled materials.

(10) Property dangerous to public health and safety.

(11) Classified items or property determined to be sensitive for reasons of national security.

(c) Refer to part 101–42 of this title for additional guidance on the disposition of classes of property under paragraphs (b)(7) through (b)(11) of this section.

§ 102–36.230 Must we report excess personal property that is attached to real property?

Yes. Report excess related personal property that is attached to real property to the Office of Real Property, GSA, in accordance with part 101–47 of this title.

§ 102–36.235 Where do we send the reports of excess personal property?

(a) You must direct electronic submissions of excess personal property to the Federal Disposal System (FEDS) maintained by the Property Management Division (FBP), GSA, Washington, DC 20406.

(b) For paper submissions, you must send the SF 120 to the regional GSA Personal Property Management office for the region in which the property is located. However, for the categories of property listed in the table in § 102–36.115(b), forward the SF 120 to the corresponding regions.

§ 102–36.240 What information do we provide when reporting excess personal property?

(a) You must provide the following data on excess personal property:

(1) A report number (6-digit activity address code and 4-digit Julian date).

(2) 4-digit Federal Supply Class (use National Stock Number whenever available).

(3) Description of item, in sufficient detail.

(4) Quantity and unit of issue.

(5) Disposal Condition Code.

(6) Original acquisition cost per unit and total cost (use estimate if original cost not available).

(7) Manufacturer, date, part and serial number, when required by GSA.

(8) Date property is available for removal.

(9) If you will conduct the sale of surplus property that is not transferred or donated.

(b) In addition, provide the following information on your report of excess, when applicable:

(1) If repairs are required, the type of repairs and estimated costs.

(2) If any parts/components will be removed from the item before issuance to the recipient.

(3) Special handling requirements (see Subpart E of this part).

(4) If reimbursement is required, the authority under which the reimbursement is requested, the amount of reimbursement and the appropriate fund code to which money is to be deposited.

(5) Whether the property has been previously reported as excess or was acquired as excess and the report number.

§ 102–36.245 What are the disposal condition codes?

The disposal condition codes are contained in the following table:

Disposal condition code	Definition
1	New. Property which is in new condition or unused condition and can be used immediately without modifications or repairs.
4	Usable. Property which shows some wear, but can be used without significant repair.
7	Repairable. Property which is unusable in its current condition but can be economically repaired.
X	Salvage. Property has value in excess of its basic material content, but repair or rehabilitation is impractical and/or uneconomical.
S	Scrap. Property which has no value except for its basic material content.

Disposing of Excess Personal Property

§ 102–36.250 Are we accountable for the personal property that has been reported excess?

Yes you are accountable, until the time the excess personal property is picked up by the designated recipient or its agent. You are responsible for the care and handling charges while the excess personal property is going through the screening and disposal process. Care and handling charges include costs for completing, repairing, converting, rehabilitating, operating, preserving, protecting, insuring, packing, storing, handling, conserving, and transporting the property prior to its removal by the recipient, and destroying or rendering innocuous property which is dangerous to public health or safety.

§ 102–36.255 Does GSA ever take physical custody of excess personal property?

Generally you retain physical custody of the property prior to final disposition. Very rarely GSA may consider accepting physical custody of excess personal property. Under special circumstances, GSA may take custody or may direct the transfer of partial or total custody to other executive agencies, with their consent.

§ 102–36.260 What options do we have when unusual circumstances do not allow adequate time for disposal through GSA?

Contact your regional GSA Personal Property Management office for any existing interagency agreements that would allow you to turn in excess personal property to a Federal facility. You are responsible for any turn-in costs and all costs related to transporting the excess to these facilities.

§ 102–36.265 How do we promote the expeditious transfer of excess personal property?

For expeditious transfer of excess personal property you should:

(a) Provide complete and accurate details on the description, condition and location of the property on your reports of excess.

(b) Ensure that any available operating manual, parts list, diagram, maintenance log, or other instructional publication is available at the time of transfer.

(c) Advise the designated recipient of any special requirements for dismantling, shipping/transportation.

(d) Provide advance notice when the excess personal property is located at a facility due to be closed and the scheduled date of closing, and ensure there is sufficient time for screening and removal of property.

§ 102–36.270 What if there are competing requests for the same excess item?

(a) GSA will generally approve transfers on a first-come, first-served basis. When more than one Federal agency requests the same item, and the quantity available does not allow equitable distribution, GSA will consider factors such as national defense requirements, emergency needs, avoiding the necessity of a new

procurement, energy conservation, transportation costs, and retention of title in the Government. GSA will normally give preference to the agency that will retain title in the Government.

(b) Requests for property for the purpose of cannibalization will normally be subordinate to requests for other uses.

§ 102–36.275 What if a Federal agency requests excess personal property that is in donation screening or in the sales process?

Prior to final disposition, GSA will give primary consideration to requests from authorized Federal activities for excess personal property in donation screening or in the sales process. Federal transfers may be authorized prior to removal of the property under a donation or sales action.

§ 102–36.280 May we dispose of excess personal property without GSA approval?

No you need GSA approval, except under the following limited situations.

(a) You may transfer to another Federal agency excess personal property that has not yet been reported to GSA, and the total acquisition cost of the excess personal property does not exceed $10,000 per line item. You may transfer excess personal property exceeding the $10,000 per line item limitation, provided you first contact the appropriate regional GSA Personal Property Management office in which the property is located for oral approval of a prearranged transfer. If there are multiple requests for the same excess item, apply the allocating factors in accordance with § 102–36.270.

(b) You may dispose of excess personal property that is not required to be reported to GSA (see § 102–36.225(b)).

§ 102–36.285 May we withdraw from the disposal process excess personal property that we have reported to GSA?

Yes you may withdraw property from the disposal process, but only with the approval of GSA and to satisfy an internal agency requirement. Property pending transfer or donation and property that has been offered for sale by GSA may be returned to your control with proper justification.

Transfers With Reimbursement

§ 102–36.290 May we charge for excess personal property transferred to another Federal agency?

(a) Except as provided in this section, you may not charge for excess personal property transferred to another agency except for direct costs you incurred in the packing, loading and shipping of the property. The recipient is responsible for such packing and transportation charges. You may not charge for overhead or administrative expenses.

(b) However, when any one of the following conditions is met, you may require and retain reimbursement for the cost of the property from the recipient:

(1) Your agency has the statutory authority to require and retain reimbursement for the property.

(2) You are disposing of the property under the exchange/sale authority.

(3) You had originally acquired the property with funds not appropriated from the general fund of the Treasury or appropriated therefrom but by law reimbursable from assessment, tax, or other revenue. It is the current executive branch policy that working capital fund property shall be transferred without reimbursement.

(4) You or the recipient is the U.S. Postal Service.

(5) You or the recipient is the municipal government of DC.

(6) You or the recipient is a wholly owned or mixed-ownership Government corporation.

§ 102–36.295 How much do we charge for excess personal property on a transfer with reimbursement?

(a) You may require reimbursement in an amount up to the fair market value of the property when the transfer involves property meeting conditions in § 102–36.290(b)(1) through (b)(4).

(b) When you or the recipient is the municipal government of DC or a wholly owned or mixed-ownership Government corporation (see § 102–36.290(b)(5) and (b)(6)), you may only require fair value reimbursement. Fair value reimbursement is 20 percent of the original acquisition cost for new or unused property (i.e., condition code 1), and zero percent for other personal property. A higher fair value may be used if you and the recipient agency agree. Due to special circumstances or the nature of the property, you may use other criteria for establishing fair value if approved or directed by GSA. You must refer any disagreements to the regional GSA Personal Property Management office.

Report of Disposal Activity

§ 102–36.300 Must we report the disposition of excess personal property to GSA?

Yes. You must report on dispositions of excess personal property to any non-Federal recipients that are not transacted through GSA. GSA will subsequently submit a summary of the reports to Congress.

§ 102–36.305 How do we report the disposition of excess personal property?

(a) You must report annually any excess personal property furnished to non-Federal recipients during the fiscal year. Submit your report, in letter form, to GSA, Personal Property Management Policy Division (MTP), 1800 F Street, NW, Washington, DC 20405, within 90 calendar days after the close of each fiscal year. The report must cover property disposed in all areas within the United States, the District of Columbia, the U.S. Virgin Islands, American Samoa, Guam, the Commonwealth of Puerto Rico, and the Commonwealth of the Northern Mariana Islands. Negative reports are required.

(b) The report (interagency report control number 0154–GSA-AN) must reference this part and contain the following:

(1) Names of the non-Federal recipients.

(2) Status of the recipients (cost-reimbursement contractor, cooperative, project grantee, etc.).

(3) Total original acquisition cost of excess personal property furnished to each type of recipient, by type of property (two-digit FSC groups).

Abandonment/Destruction

§ 102–36.310 May we abandon or destroy excess personal property without reporting it to GSA?

Yes you may abandon or destroy excess personal property, but only after you make a written determination that the property has no commercial value or the estimated cost of its continued care and handling would exceed the estimated proceeds from its sale. An item has no commercial value when it has neither utility nor monetary value (either as an item or as scrap).

§ 102–36.315 Who makes the determination to abandon or destroy excess personal property?

To abandon or destroy property, an authorized official within your agency makes a written finding that must be approved by a reviewing official who is not directly accountable for the property.

§ 102–36.320 Are there any prohibitions or exceptions to the use of the abandonment/destruction authority?

Yes, there are prohibition and exceptions, as follows:

(a) No abandonment or destruction shall be made in a manner which is detrimental or dangerous to public health or safety, or which will cause infringement upon the rights of other persons.

(b) If at any time prior to the actual abandonment or destruction a Federal

agency or eligible non-Federal activity is interested in acquiring the property, transfer/donation procedures in lieu of abandonment/destruction must be implemented. If you become aware of an interest from an entity in purchasing the property, sales procedures in lieu of abandonment/destruction must be implemented.

§ 102–36.325 What must be done before abandoning/destroying excess personal property?

Except as provided in § 102–36.330(a), you must provide public notice of intent to abandon or destroy excess personal property, in a format and timeframe specified by your agency regulations (such as publishing a notice in a local newspaper, posting of signs in common use facilities available to the public, or providing bulletins on your website through the internet). You must also include in the notice an offer to sell in accordance with part 101–45 of this title.

§ 102–36.330 Must we always provide public notice regarding abandonment/destruction of excess personal property?

(a) Yes you must provide public notice, except when:

(1) The value of the property is so little or the cost of its care and handling is so great that its retention for advertising for sale, even as scrap, is clearly not economical;

(2) Abandonment or destruction is required because of health, safety, or security reasons; or

(3) When the original acquisition cost of the item (estimated if unknown) is less than $500.

(b) Additional guidelines for the abandonment/destruction of hazardous materials are prescribed in part 101–42 of this title.

Subpart E—Property Whose Disposal Requires Special Handling

§ 102–36.335 Are there certain types of excess personal property that must be disposed of differently?

Yes. You must comply with the additional provisions in this subpart when disposing of the types of personal property listed in this subpart.

Aircraft and Aircraft Parts

§ 102–36.340 What must we do when disposing of excess aircraft?

(a) You must report to GSA all excess aircraft, regardless of condition or dollar value, and provide the following information on the SF 120:

(1) Manufacturer, date of manufacture, model, serial number.

(2) Major components missing from the aircraft (such as engines, electronics).

(3) Whether the:

(i) Aircraft is in flyable or nonflyable condition;

(ii) Dataplate has been removed;

(iii) Historical and maintenance records are available; and

(iv) Aircraft has been previously certificated by the Federal Aviation Administration (FAA).

(4) For military aircraft, indicate Category A, B, or C as designated by DOD (see Defense Materiel Disposition Manual, DOD 4160.21–M, Chapter 4, paragraph B2). For copies of DOD 4160.21–M, write to Defense Logistics Agency, Attn: DLSC–LC, 8725 John J. Kingman Road, 4222, Ft. Belvoir, VA 22060–6221, or access an electronic copy at www:drms.dla.mil under Publications.

(b) You must also indicate if the aircraft:

(1) Was previously used for non-flight purposes (i.e., ground training or static display);

(2) Has not been maintained to FAA airworthiness standards; and/or

(3) Has been subjected to extensive disassembly and re-assembly procedures for ground training, or repeated burning for fire-fighting training.

(c) When the designated recipient's intended use is for non-flight purposes, you must remove and return the data plate to the FAA prior to releasing the aircraft to the authorized recipient.

(d) You must also submit a report of the final disposition of the aircraft to the Federal Aviation Interactive Reporting System (FAIRS) maintained by the Aircraft Management Policy Division (MTA), GSA, Washington, DC 20405. For additional instructions on reporting to FAIRS see part 101–37 of this title.

§ 102–36.345 What is a Flight Safety Critical Aircraft Part (FSCAP)?

A FSCAP is any aircraft part, assembly, or installation containing a critical characteristic whose failure, malfunction, or absence could cause a catastrophic failure resulting in engine shut-down or loss or serious damage to the aircraft resulting in an unsafe condition.

§ 102–36.350 How do we identify a FSCAP?

Any aircraft part designated by DOD as FSCAP is assigned an alpha Criticality Code, and the code is annotated on the original transfer document when you acquire the part. If the original transfer document does not contain the Criticality Code, you may contact the Military service that originally owned the part for assistance in making this determination, or query DOD's Federal Logistics Information System (FLIS) using the National Stock Number (NSN) for the part. For assistance in subscribing to the FLIS service contact the FedLog Consumer Support Office, 800–351–4381.

§ 102–36.355 What are the FSCAP Criticality Codes?

The FSCAP criticality codes are contained in the following table:

Code	Description
F	Flight Safety Critical Aircraft Part.
E	FSCAP specially designed to be or selected as being nuclear hardened.

§ 102–36.360 What must we do when disposing of excess FSCAP?

When the aircraft part is a FSCAP, you must perpetuate the appropriate FSCAP Criticality Code on all property records. When reporting excess FSCAP, annotate the manufacturer, date of manufacture, part number, serial number, and the appropriate Criticality Code on the SF 120, and ensure that all available historical and maintenance records accompany the part at the time of issue. Depending on the availability of documentation and the intended use for the part, FSCAP may be transferred, donated, or sold in accordance with subpart 101–37.6 of this title. You must mutilate undocumented FSCAP that has no traceability to its original equipment manufacturer. Mutilation may be accomplished as a condition of transfer/donation or sale, but must be witnessed and certified when completed.

§ 102–36.365 How do we dispose of aircraft parts that have no FSCAP designation?

When the aircraft part has no FSCAP designation but is a life-limited part, you must also ensure that tags and labels, historical data and maintenance records accompany the part on any transfers, donations or sales. For additional requirements and guidance regarding the disposal of FSCAP and life-limited parts refer to part 101–37 of this title.

Canines, Law Enforcement

§ 102–36.370 May we transfer or donate canines that have been used in the performance of law enforcement duties?

Yes. Under Public Law 105–27 (111 Stat. 244), when the canine is no longer needed for law enforcement duties, you may donate the canine to an individual who has experience handling canines in the performance of those official duties.

Disaster Relief Property

§ 102–36.375 Are there special requirements concerning the use of excess personal property for disaster relief?

Yes. Upon declaration by the President of an emergency or a major disaster, you may loan excess personal property to State and local governments, with or without compensation, to alleviate suffering and damage resulting from any emergency or major disaster (Disaster Relief Act of 1974 (Public. Law 93–288 (42 U.S.C. 5121)) and Executive Orders 11795 (3 CFR, 1971–1975 Comp., p. 887) and 12148 (3 CFR, 1979 Comp., p. 412), as amended). If the loan involves property that has already been reported excess to GSA, you may withdraw the item from the disposal process subject to approval by GSA. You may also withdraw property already reported to GSA for use by your agency in providing assistance in disaster relief.

Firearms

§ 102–36.380 Are there special requirements for disposing of excess firearms?

Yes. You may transfer excess firearms only to those Federal agencies authorized to acquire firearms for official use. GSA may require a written justification from the requesting agency. GSA may donate certain classes of surplus firearms to State and local government activities whose primary function is the enforcement of applicable Federal, State, and/or local laws and whose compensated law enforcement officers have the authority to apprehend and arrest. Firearms not transferred or donated must be destroyed and sold as scrap. For additional guidance on disposition of firearms refer to part 101–42 of this title.

Foreign Excess Personal Property

§ 102–36.385 What is foreign excess personal property?

Foreign excess personal proporty is any U.S. owned excess personal property located outside the United States (U.S.), the District of Columbia, the U.S. Virgin Islands, American Samoa, Guam, the Commonwealth of Puerto Rico, and the Commonwealth of the Northern Mariana Islands.

§ 102–36.390 Who is responsible for disposing of foreign excess personal property?

Your agency is responsible for disposing of your foreign excess property, as provided by title IV of the Property Act.

§ 102–36.395 How may we dispose of foreign excess personal property overseas?

To dispose of foreign excess personal property overseas, you may:

(a) Offer the property for Federal reuse overseas;

(b) Sell, exchange, lease, or transfer such property for cash, credit, or other property;

(c) Donate medical materials or supplies to nonprofit medical or health organizations, including those qualified under sections 214(b) and 607 of the Foreign Assistance Act of 1961, as amended (22 U.S.C. 2174, 2357); or

(d) Abandon, destroy or donate such property when you determine that it has no commercial value or the estimated cost of care and handling would exceed the estimated proceeds from its sale, in accordance with sec. 402(a) of the Property Act.

§ 102–36.400 What are our responsibilities in the disposal of foreign excess personal property?

You must:

(a) Determine whether it is in the interest of the U.S. Government to return foreign excess personal property to the U.S. for further reuse or to dispose of the property overseas.

(b) Ensure that any disposal of property overseas conforms to the foreign policy of the United States.

(c) Ensure that, when foreign excess is disposed of overseas, donation/sales conditions include a requirement for compliance with U.S. Department of Commerce and Department of Agriculture regulations when transporting any personal property back to the U.S.

(d) Inform the U.S. State Department of any disposal of property to any foreign governments or entities.

(e) Submit an annual report to Congress of all transactions involving the disposal of foreign excess personal property (40 U.S.C. 514).

§ 102–36.405 How may GSA assist us in disposing of foreign excess personal property?

You may request GSA's assistance in the screening and disposal of foreign excess personal property. GSA may, after consultation with you, designate property for return to the United States for transfer or donation purposes.

§ 102–36.410 Who pays for the transportation costs when foreign excess personal property is returned to the United States?

(a) You are responsible for any transportation costs when foreign excess property is returned to the U.S. for subsequent reuse.

(b) When foreign excess property is to be returned to the U.S. for the purpose of a transfer or donation under the provisions of Sections 202 and 203 of the Property Act, the receiving agency is responsible for all direct costs involved in the transfer, which include packing, handling, crating, and transportation.

Gifts

§ 102–36.415 May we keep gifts given to us from the public?

You may retain gifts from the public depending on the type of gift, the condition under which the gift was offered, and when your agency has gift retention authority.

§ 102–36.420 How do we dispose of a gift in the form of money or intangible personal property?

Report excess intangible personal property on a SF 120 to GSA, Personal Property Management Division (FBP), Washington, D.C. 20406. You must not transfer or dispose of this property without prior approval of GSA, except for bonds, notes, or other securities authorized to be disposed of by the Secretary of the Treasury under the authority of 31 U.S.C. 324.

§ 102–36.425 How do we dispose of gifts other than money or intangible personal property?

(a) When the gift is offered with the condition that the property be sold and the proceeds used to reduce the public debt, report the gift on a SF 120 to the regional GSA Personal Property Management office. GSA will convert the gift to money upon acceptance and deposit the proceeds into the U.S. Treasury.

(b) When the gift is offered with no conditions or restrictions, and your agency has gift retention authority, you may use the gift for an authorized purpose without reporting to GSA. The property will then lose its identity as a gift and you must account for it in the same manner as Federal personal property acquired from authorized sources. When no longer needed you must report it on a SF 120 as excess personal property to GSA.

Note to § 102–36.425(b): Under 10 U.S.C. 2608, the Department of Defense has authority to accept gifts or contributions of money or real or personal property for use in defense programs without reporting to GSA.

(c) When the gift is offered with no conditions or restrictions, but your agency does not have gift retention authority, you must report it on a SF 120 to the regional GSA Personal Property Management office. If your agency is interested in keeping the gift, you must submit the SF 120 and SF 122 together. Otherwise GSA will offer the property for transfer to another Federal

agency if the gift can be used in its existing form, or convert the gift to money and deposit the funds with U.S. Treasury.

§ 102–36.430 How do we dispose of gifts from foreign governments or entities?

Report foreign gifts on a SF 120 to GSA, Personal Property Management Division (FBP), Washington, DC 20406, for possible use by your agency, or for transfer, donation or sale in accordance with the provisions of part 101–49 of this title.

Hazardous Personal Property

§ 102–36.435 What is hazardous personal property?

Hazardous personal property means property that is deemed a hazardous material, chemical substance or mixture, or hazardous waste under the Hazardous Materials Transportation Act (HMTA) (49 U.S.C. 5101), the Resource Conservation and Recovery Act (RCRA) (42 U.S.C. 6901–6981), or the Toxic Substances Control Act (TSCA (15 U.S.C. 2601–2609).

§ 102–36.440 May we dispose of excess hazardous personal property?

Yes, but only in accordance with part 101–42 of this title. When reporting excess hazardous property to GSA, certify on the SF 120 that the property has been packaged and labeled as required. Annotate any special requirements for handling, storage, or use, and provide a description of the actual or potential hazard.

Munitions List Items/Commerce Control List Items

(MLIs/CCLIs)

§ 102–36.445 What are MLIs?

MLIs are commodities (usually defense articles) listed in the International Traffic in Arms Regulation (22 CFR part 121), published by the U.S. Department of State. These items may require demilitarization when issued to any non-DoD entity, and will require Department of State approval and appropriate licensing when exported from the U.S.

§ 102–36.450 What are CCLIs?

CCLIs are items that are subject to export control by the Bureau of Export Administration, Department of Commerce. These items have been identified in the U.S. Export Administration Regulations (15 CFR part 774) as export controlled for reasons of national security, crime control, technology transfer and scarcity of materials, and may require export license when transported from the U.S.

§ 102–36.455 May we dispose of excess MLIs/CCLIs?

You may dispose of excess MLIs/CCLIs only when you comply with the additional disposal and demilitarization requirements contained in part 101–42 of this title.

§ 102–36.460 What is demilitarization (DEMIL)?

As defined by the Department of Defense, demilitarization is the act of destroying the military capabilities inherent in certain types of equipment or material. Such destruction may include deep sea dumping, mutilation, cutting, crushing, scrapping, melting, burning, or alteration so as to prevent the further use of the item for its originally intended purpose. For additional guidance on DEMIL procedures see DOD Demilitarization and Trade Security Control Manual, DOD 4160.21–M–1.

§ 102–36.465 How do we identify MLIs/CCLIs requiring demilitarization?

You identify MLIs/CCLIs requiring demilitarization by the demilitarization code that is assigned to each MLI or CCLI. The code indicates the type and scope of demilitarization and/or export controls that must be accomplished, when required, before issue to any non-DOD activity. For a listing of the codes and the type of demilitarization required see DOD 4160.21–M–1.

Printing Equipment and Supplies

§ 102–36.470 Are there special procedures for reporting printing and binding equipment and supplies?

Yes. In accordance with 44 U.S.C. 312, you must submit reports of excess printing and binding machinery, equipment, materials, and supplies to the Public Printer, Government Printing Office (GPO), Customer Service Manager, North Capitol and H Streets, NW, Washington, DC 20401. If GPO has no requirement for the property, you must then submit the report to GSA.

Scrap

§ 102–36.475 May we abandon/destroy scrap?

Yes, you may abandon or destroy excess personal property in scrap condition (see § 102–36.280(b)). However, you must not abandon or destroy scrap in a manner that is detrimental or dangerous to public health or safety, or infringe upon the rights of other persons.

Shelf-Life Items

§ 102–36.480 What is a shelf-life item?

A shelf-life item is any item that deteriorates over time or has unstable characteristics such that a storage period must be assigned to assure the item is issued within that period to provide satisfactory performance. Management of such items is governed by subpart 101–27.2 of this title and by DOD instructions, for executive agencies and DOD respectively.

§ 102–36.485 Do we report excess shelf-life items?

When the quantities on hand cannot be utilized, reassigned, or returned for credit, you must report any items for which there is an expected excess beyond the predetermined expiration date to insure maximum use prior to deterioration.

§ 102–36.490 How do we report excess shelf-life items?

You must identify the items as shelf-life items by ''SL'', indicate the expiration date, whether the date is the original or an extended date, and if the date is further extendable. GSA may adjust the screening period based on re-use potential and the remaining useful shelf life.

§ 102–36.495 Do we report excess medical shelf-life items held for national emergency purposes?

You should report as excess any medical materials or supplies held for national emergency purposes when the remaining shelf life is too short to justify retention. You must identify such items with ''MSL'', indicate any specialized storage requirements, and ensure that sufficient time is available to permit transfer or disposal before their shelf life expires and the items are unfit for human use.

§ 102–36.500 May we transfer or exchange excess medical shelf-life items with other Federal agencies?

Yes.

(a) You may exchange excess medical shelf-life items held for national emergency purposes with another Federal agency without GSA approval and without regard to part 101–46 of this title, but only for other medical materials or supplies to be held for national emergency purposes.

(b) You may transfer such items to another Federal agency when you and the transferee agency agree to the terms and prices. You may credit proceeds from such transfers to your agency's current applicable appropriation and use it only for the purchase of medical materials or supplies for national emergency purposes.

Vessels

§ 102–36.505 What must we do when disposing of vessels?

(a) When you dispose of vessels you must indicate on the SF 120, the following information:

(1) If the vessel has been inspected by the Coast Guard.

(2) If testing for hazardous materials has been done. And if so, the result of the testing.

(3) If hazardous materials clean-up is required, and when it will be accomplished by your agency.

(b) In accordance with section 203(i) of the Property Act, the Federal Maritime Administration (FMA), Department of Transportation, is responsible for disposing of surplus vessels weighing 1,500 gross tons or more, which are determined to be merchant vessels or capable of conversion to merchant use. The SF 120 for such vessels shall be forwarded to GSA for submission to FMA.

(c) Disposal instructions regarding vessels in this section do not apply to battleships, cruisers, aircraft carriers, destroyers, and submarines.

Subpart F—Miscellaneous Disposition

§ 102–36.510 What is the authority for transfers under ''Computers for Learning''?

(a) The Stevenson-Wydler Technology Innovation Act of 1980, as amended (15 U.S.C. 3710(i)), authorizes Federal agencies to transfer excess education-related Federal equipment to educational institutions or nonprofit organizations for educational and research activities. Executive Order 12999 (3 CFR, 1996 Comp., p. 180) requires the transfer of computer equipment for use by schools or non-profit organizations.

(b) Each Federal agency is required to identify a point of contact within the agency to assist eligible recipients, and to publicize the availability of such property to eligible communities. Excess education-related equipment may be transferred directly under established agency procedures, or reported to GSA as excess for subsequent transfer to potential eligible recipients as appropriate. Reports of transfers under this authority must be included in the Non-Federal Recipients Report and submitted annually to GSA.

(c) The ''Computers for Learning'' website has been developed to streamline the transfer of excess and surplus Federal computer equipment to schools and nonprofit educational organizations. For additional information about this program access the ''Computers for Learning'' website, *http://www.computers.fed.gov*.

Dated: November 2, 1999.

G. Martin Wagner,

Associate Administrator for Governmentwide Policy.

[FR Doc. 99–29138 Filed 11–15–99; 8:45 am]

BILLING CODE 6820–24–P

FEDERAL COMMUNICATIONS COMMISSION

47 CFR Parts 15 and 18

[ET Docket No. 98–80; FCC 99–296]

Conducted Emission Limits

AGENCY: Federal Communications Commission.

ACTION: Proposed rule.

SUMMARY: This document proposes to revise the limits on the amount of radio frequency energy that is permitted to be conducted onto the AC power lines. The purpose of these limits is to protect radio services operating below 30 MHz from interference. This proposal would harmonize the standards on conducted emissions with the international standards developed by the International Electrotechnical Commission (IEC), International Special Committee on Radio Interference (CISPR). Such harmonization will facilitate a global marketplace to the benefit of manufacturers and consumers.

DATES: Comments must be submitted on or before January 31, 2000, and reply comments on or before February 29, 2000.

ADDRESSES: All filings must be sent to the Commission's Secretary, Magalie Roman Salas, Office of the Secretary, Federal Communications Commission, 445 12th Street, SW, TW–A325, Washington, DC 20554.

FOR FURTHER INFORMATION CONTACT: John A. Reed, Office of Engineering and Technology, (202) 418–2455.

SUPPLEMENTARY INFORMATION: This is a summary of the Commission's *Notice of Proposed Rule Making* in ET Docket No. 98–80, adopted October 13, 1999, and released October 18, 1999. The full text of this Commission decision is available for inspection and copying during normal business hours in the FCC Reference Center (Room CY–A257), 445 12th Street, SW, Washington, DC, and also may be purchased from the Commission's copy contractor, International Transcription Services, Inc., (202) 857–3800, 1231 20th Street, NW, Washington, DC 20036.

Summary of the Notice of Proposed Rule Making

1. In the *Notice of Proposed Rule Making*, the Commission proposes to amend parts 15 and 18 of its rules regarding the limits on the amount of radio frequency (RF) energy that is permitted to be conducted onto the AC power lines. The devices regulated under parts 15 and 18 include personal computers, TV and FM receivers, RF lighting devices, microwave ovens, induction cooking ranges and ultrasonic equipment. The conducted RF energy can cause interference to radio communications via two possible paths. First, the RF energy may be carried along the electrical wiring to another device that is also connected to the electrical wiring. Second, at frequencies below 30 MHz where wavelengths are greater than 10 meters, the long stretches of electrical wiring can act as very efficient antennas permitting the RF energy to be radiated over the airwaves.

2. Under parts 15 and 18 of the rules, the potential for interference below 30 MHz is controlled by limiting the levels of RF energy that may be conducted onto the AC power lines. The current standards are based largely on limits that were developed in the late 1970s for digital devices. Accordingly, on May 29, 1998, the Commission adopted a *Notice of Inquiry* (''NOI''), 63 FR 34618, June 25, 1998, in this proceeding to review the conducted emission limits applicable to equipment operating under parts 15 and 18 of its rules. In the NOI, the Commission designated this proceeding as parts of its 1998 biennial review of regulations pursuant to section 11 of the Communications Act of 1934, as amended. Section 11 requires the Commission to review all of its regulations applicable to providers of telecommunications services and determine whether any rule is no longer in the public interest as a result of meaningful economic competition between providers of telecommunications services. While a review of the regulations regarding conducted emission limits for products subject to parts 15 and 18 of the rules is not specifically encompassed by section 11 of the Communications Act of 1934, this review is consistent with the objectives and spirit of section 11. As part of our biennial review, the Commission stated that its goal in this proceeding, among other things, was to examine whether the regulations on conducted emission limits continue to be necessary. It also sought information on the costs of complying with these

regulations and whether these regulations impede new technologies.

3. Based on the comments filed in response to the NOI, the Commission is proposing a number of changes to its rules to reduce the burden of these regulations. Specifically, it is proposing to amend the conducted emission limits to make them generally consistent with international standards developed by the International Electrotechnical Commission (IEC), International Special Committee on Radio Interference (CISPR). The specific proposals are shown below. Consistency with the international standards will promote a global marketplace that will reduce costs for manufacturers and consumers. The Commission is proposing to adopt conducted emission limits for part 18 consumer products, such as microwave ovens, that currently are subject only to radiated emission limits. The Commission also proposes an alternative measurement procedure for part 15 transmitters operating below 30 MHz where the responsible party may demonstrate that the total radiated emissions from the device, including emissions at the fundamental frequency that are conducted onto, and radiated from, the AC power lines, do not exceed the radiated emission limits; such transmitters would not be required to demonstrate compliance with the AC power line conducted limits at the fundamental frequency.

4. Comments are invited on the proposed standards, as well as the expansion of the frequency ranges over which conducted emissions are applied. Comments are also invited on whether these standards will adequately protect communications services against interference and on how compliance with international standards may affect product costs.

5. Comments are also sought on whether a limit on power line conducted emissions could be used by carrier current systems as an optional alternative method of demonstrating compliance with the radiated emission limits outside of the AM broadcast band. In addition, comments are sought on the proposal to clarify when radiated emission measurements below 30 MHz are required for unintentional radiators operating under part 15 of the rules.

6. The Commission proposes that the regulations contained in the *Notice of Proposed Rule Making* become effective for all part 15 and 18 products subsequently authorized under a grant of certification, a Declaration of Conformity, or verification one year or more from the date of publication of the resulting Report and Order in the **Federal Register**. It also proposes that all products comply with these standards if they are imported or manufactured on or after three years from the date of publication of the Report and Order in the **Federal Register**.

Initial Regulatory Flexibility Analysis

7. As required by the Regulatory Flexibility Act (RFA),[1] the Commission has prepared an Initial Regulatory Flexibility Analysis (IRFA) of the possible significant economic impact on small entities by the policies and rules proposed in this *Notice of Proposed Rule Making* (Notice). Written public comments are requested on the IRFA. Comments must be identified as responses to the IRFA and must be filed by the deadlines for comments on the Notice. The Commission will send a copy of this Notice, including the IRFA, to the Chief Counsel for Advocacy of the Small Business Administration. *See* 5 U.S.C. 603(a).

Need for, and Objectives of, the Proposed Rule

8. This rule making proposal is initiated to obtain comments regarding proposed changes to the regulations for radio frequency devices that do not require a license to operate. The Commission seeks to determine if its standards regarding the amount of radio frequency energy permitted to be conducted onto the AC power lines should be amended.

Legal Basis

9. The proposed action is taken pursuant to sections 4(i), 301, 302, 303(e), 303(f), and 303(r) of the Communications Act 10 1934, as amended, 47 U.S.C. 154(i), 301, 302, 303(e), 303(f), and 303(r).

Description and Estimate of the Number of Small Entities to Which the Proposed Rules Will Apply

10. For purposes of this Notice, the RFA defines a ''small business'' to be the same as a ''small business concern'' under the Small Business Act, 15 U.S.C. 632, unless the Commission has developed one or more definitions that are appropriate to its activities.[2] Under the Small Business Act, a ''small business concern'' is one that: (1) is independently owned and operated; (2) is not dominant in its field of operations; and (3) meets any additional criteria established by the Small Business Administration (SBA).[3] SBA has defined a small business for Standard Industrial Classification (SIC) category 4812 (Radiotelephone Communications) to be small entities when they have fewer than 1500 employees.[4] Given this definition, nearly all such companies are considered small.

Description of Projected Reporting, Recordkeeping and Other Compliance Requirements

11. Part 15 and part 18 radio frequency devices are already required to be authorized under the Commission's certification, Declaration of Conformity, or verification procedures as a prerequisite to marketing and importation. The reporting and recordkeeping requirements associated with these equipment authorizations would not be changed by the proposals contained in the Notice. While most part 15 devices already are subject to standards on the amount of radio frequency energy that can be placed on the AC power lines, different limits are being proposed in the Notice. In most cases, depending on the bandwidth of the emission placed on the AC power lines, the emission limits are being relaxed from the current standards. Most part 18 products, such as microwave ovens, are not currently subject to limits on the amount of radio frequency energy that can be placed on the AC power lines. The limits proposed in this Notice would be new requirements. To reduce any perceived burden of compliance with the proposed standards, the Commission is proposing to adopt internationally-recognized standards that currently are specified in the European Union and other countries. This will permit manufacturers of all sizes to market their equipment globally.

Significant Alternatives to Proposed Rules Which Minimize Significant Economic Impact on Small Entities and Accomplish Stated Objectives

12. None.

Federal Rules that May Duplicate, Overlap, or Conflict with the Proposed Rule

13. None.

[1] 1 *See* 5 U.S.C. 603. The RFA, *see* 5 U.S.C. 601 *et. seq.*, has been amended by the Contract With America Advancement Act of 1996, Public Law 104–121, 110 Stat. 847 (1996) (CWAAA). Title II of the CWAAA is the Small Business Regulatory Enforcement Fairness Act of 1996 (SBREFA).

[2] *See* 5 U.S.C. 601(3) incorporating by reference the definition of ''small business concern'' in 5 U.S.C. 632.

[3] *See* 15 U.S.C. 632.

[4] *See* 13 CFR 121.201.

Federal Communications Commission.

Magalie Roman Salas,

Secretary.

[FR Doc. 99–29784 Filed 11–15–99; 8:45 am]

BILLING CODE 6712–01–P

DEPARTMENT OF TRANSPORTATION

Research and Special Programs Administration

49 CFR Part 178

[Docket No. RSPA–99–5921(HM–213A)]

RIN 2137–AD34

Hazardous Materials: Cargo Tank Rollover Damage Protection Requirements

AGENCY: Research and Special Programs Administration (RSPA), DOT.

ACTION: Advance notice of proposed rulemaking (ANPRM).

SUMMARY: RSPA is requesting comments on a research study conducted by the University of Michigan Transportation Research Institute (UMTRI) titled ''The Dynamics of Tank-Vehicle Rollover and the Implications for Rollover-Protection Devices.'' The intended effect of this action is to obtain information concerning the need, if any, for amending the Hazardous Materials Regulations (HMR) concerning cargo tank rollover damage protection devices, the costs and benefits associated with such amendments, and ways to minimize impacts on small businesses. This ANPRM addresses DOT specification cargo tanks used for the transportation of liquid hazardous materials.

DATES: Comments must be received by May 15, 2000.

ADDRESSES: Submit written comments to the Dockets Management System, U.S. Department of Transportation, Room PL. 401, 400 Seventh Street, SW, Washington, DC 20590–0001. Comments should identify the docket number, RSPA–99–5921 (HM–213A) and submitted in two copies. If you wish to receive confirmation that RSPA has received your comments, include a self-addressed stamped postcard. Comments may also be submitted to the docket electronically by logging onto the Dockets Management System website at *http://dms.dot.gov*. Click on ''Help & Information'' to obtain instructions for filing the document electronically.

The Docket Management System is located on the Plaza Level of the Nassif Building at the Department of Transportation at the above address. You may review public dockets between the hours of 10 a.m. and 5 p.m., Monday through Friday, excluding Federal holidays. Internet users may review all comments received by the U.S. Department of Transportation by accessing RSPA's Hazmat Safety website at *http:/hazmat.dot.gov*.

FOR FURTHER INFORMATION CONTACT: Ms. Jennifer Karim, Office of Hazardous Materials Standards, Research and Special Programs Administration, telephone (202) 366–8553; Mr. Ronald Kirkpatrick, Office of Hazardous Materials Technology, Research and Special Programs Administration, telephone (202) 366–4545; or Mr. Danny Shelton, Office of Safety and Technology; Federal Highway Administration, telephone (202) 366–6121, U.S. Department of Transportation, 400 Seventh Street SW, Washington, DC.

SUPPLEMENTARY INFORMATION:

I. Background

Between January and May 1991, the National Transportation Safety Board (NTSB) investigated seven highway accidents involving MC 306, MC 307, and MC 312 specification cargo tank motor vehicles that had overturned and released hazardous materials. As a result of these investigations, NTSB published a Hazardous Materials Special Investigation Report on February 2, 1992. NTSB found that, in all cases, the rollover protection devices failed to protect the cargo tank manholes and fittings from damage. NTSB reported that in three of the accidents structural failure of the rollover protection devices caused impact damage to the fittings. In the other four accidents, the design and configuration of the devices were found to be inadequate for protecting and shielding the top fittings from external objects or from striking into the ground. The damaged closures or fittings on top of the cargo tank caused the release of hazardous materials during the accidents.

In each case, the rollover protection devices failed to protect the cargo tank manholes and fittings from damage sufficient to result in loss of lading. The report found that ''* * * there is inadequate information about the forces that can be encountered in a rollover accident and the extent to which rollover-protection devices for cargo tanks can reasonably be designed to withstand these forces * * *'' In safety recommendation H–92–10, NTSB recommended that RSPA and the Federal Highway Administration (FHWA) conduct a study to analyze the forces and energy involved in cargo tank rollover crashes. In response to NTSB recommendations, FHWA contracted with the University of Michigan Transportation Research Institute (UMTRI) to conduct a study on cargo tank rollover protection.

II. UMTRI Study

The results of UMTRI's study are found in a November 1998 report titled ''The Dynamics of Tank-Vehicle Rollover and the Implications for Rollover-Protection Devices.'' The study investigated the dynamics of mild, moderate and severe rollover crash events involving cargo tank motor vehicles. The crash situations and vehicle characteristics were influenced by the rollover accidents investigated in the NTSB report. These were all DOT specification cargo tank motor vehicles and, in each incident, the top damage protection structures were impacted. In the UMTRI study, not all simulations resulted in ''rollover'' to this degree. Vehicle rotations in which the top damage protection is not affected may be more accurately termed ''overturn.'' UMTRI drew conclusions from the simulated rollover crashes based on the position and speed of each modeled tank at the point when it struck the ground. You may obtain copies of the study by calling the Records Center at (202) 366–5046, by mailing a request to the Records Center, RSPA, Room 8421, 400 Seventh Street, SW, Washington, DC 20590, or by downloading the study from the DMS electronic docket at http://dms.dot.gov.

III. Request for Comments

RSPA requests comments responding to the questions listed below to facilitate decisions on the potential need for additional changes to the HMR with regard to cargo tank rollover damage protection standards. Commenters are requested to include information pertaining to their experience with damages incurred in other rollover accidents. RSPA also invites comments on any aspect of the UMTRI study not specifically addressed by questions in this ANPRM. Information, including photographs, sketches and accident investigation reports, on rollover accidents in which cargo tank manholes and fittings were, or were not, damaged would be helpful to RSPA in determining whether to revise the current requirements. Similarly, information on release of lading through damaged heads or shell is solicited.

A. Impact Scenarios

Under the heading ''Implications of the Results for Minimum Performance Requirements for Rollover-Protection

Devices,'' the UMTRI report lays out three impact scenarios for rollover crashes based on different levels of severity. To restate and simplify the rollover events described in *B. Rollover Crashes* below, three scenarios affecting impact were formulated: (1) Mild overturn or rollover, (2) moderate rollover, and (3) more severe rollover. In each rollover event, it is important to characterize the surface impacted. For example, *type of surface*—was it asphalt, concrete highway paving, wet earth, sand, or rocky shoulder materials; *angle of surface*—was it horizontally oriented or did it have an up or down slope; or did the vehicle strike a *vertical object* such as a guardrail, curbing or a tree or pole?

A1. What description of actual accidents can you provide for better understanding about the nature of the rollover event?

A2. What is your judgement of the severity and application of the rollover? How can ''severity'' best be characterized?

A3. How did other accidents that you provided information on differ from the simulations performed in the UMTRI study?

B. Rollover Crashes

The UMTRI study examined the dynamic behavior of cargo tank motor vehicles by simulating two straight trucks and five tractor semitrailer combinations in rollover events. The study characterized the simulation program as follows: ''Each (vehicle) was subjected to 126 simulated maneuvers intended to result in rollover. Test maneuvers included mild, low-speed turns that just barely produced rollover, more dynamic maneuvers on smooth surfaces, and high-speed impacts with curbs and guardrails that result in rapid rollover with substantial pitch and yaw.'' In mild overturns, the vehicle may fall onto its side and rotate no more than 135 degrees, or it may continue to roll on a flat ground surface to engage the rollover protection devices. In more severe events, the vehicle may land on its side and slide sideways into any of the many objects with vertical surfaces that are oriented along the roadway; such objects include guardrails, retaining walls and embankments. In somewhat more dynamic rollovers, the vehicle may become airborne and rotate rapidly enough to bring the rollover protection devices into direct contact with the ground. For example, this could happen when the vehicle rolls onto a sloping or depressed roadside surface or becomes airborne due to striking a curb. On actual rollover accidents that you are aware of:

B1. What was the approximate rollover rate, impact angle, impact object, and damage condition of the protection devices?

B2. Were the accident protection devices impacted during the rollover crash? What was the magnitude of the damage to the tank shell, fittings, manholes, etc.? What was the damage condition of the protective devices?

B3. Did the rollover protection devices function as designed? If not, did they fail because of a design flaw?

C. Rollover Protection Device Performance Goals

The UMTRI report recommends that performance goals for rollover protection devices should be expressed in terms of impact events rather than in terms of the strength of the devices. This must include mass, velocity and surface parameters. The forces acting on the protection devices are the result of an impact. The protection device should be designed in such a way as to effectively manage the energy encountered by the device during a rollover impact.

UMTRI suggests that the design of rollover protection devices should be able to provide protection when an impact onto a flat surface normal to the surface of the cargo tank occurs at velocities of at least 12 ft/sec, and further that this occurs at angular orientations of the tank with respect to the impact surface which are representative of actual incidents. They suggest that impact velocities of up to 24 ft/sec would be desirable.

C1. What approach should be used in defining the performance goals for rollover protection devices? Should a performance goal be based on impact energy absorption and distribution? Should performance testing be used to validate calculations?

C2. What minimum design goals should be required for rollover damage protection devices? Should design goals establish a finite space into which the protection device could be displaced without contacting the protected fittings? Conceptually, should this be done along the lines of rear-end protection devices as set forth in § 178.345–8(d)(1)?

C3. Should the design goals be based on impact velocity as suggested by UMTRI?

C4. If impact velocity is used, what is an advisable value that will cover the majority of accidents?

D. Feasibility of UMTRI Recommendations

If implemented, the UMTRI recommendations for designing rollover protection devices would require more sophisticated analyses on the part of cargo tank designers and manufacturers to assure that rollover protection devices meet specified performance goals.

D1. What degree of economic burden, if any, would performance goals impose on small businesses such as manufacturers and engineering consultants? Would requirements for computerized analysis impose an economic burden on small businesses which may be more apt to rely on hand calculations?

D2. Would a standard design, validated to satisfy a given performance standard, be an acceptable alternative to a performance standard? Would this approach minimize economic impact on small business?

D3. What additional economic burdens might cargo tank designers and manufacturers incur if the UMTRI recommendations are adopted?

E. Application to Existing Cargo Tank Motor Vehicles

If we adopt new rollover protection device design requirements, we will need to decide whether and to what extent to apply the new requirements to cargo tank motor vehicles that are already in service.

E1. Should any new performance criteria for rollover damage protection devices be applied to cargo tank motor vehicles currently in hazardous materials transportation service?

E2. Should there be a provision proposing new standards for rollover damage protection devices which limits the amount of time a cargo tank motor vehicle currently in service may be used if it does not meet the new requirements?

E3. Should a retrofit or phase out provision be applicable to all cargo tank motor vehicles currently in service or just to cargo tanks manufactured under superseded specifications, such as MC 306, MC 307 and MC 312?

E4. What economic burden would cargo tank owners incur if they are required to retrofit or replace cargo tank motor vehicles that do not meet the new performance criteria?

Issued in Washington, DC on November 10, 1999, under authority delegated in 49 CFR part 106.

Alan I. Roberts,

Associate Administrator for Hazardous Materials Safety, Research and Special Programs Administration.

[FR Doc. 99–29904 Filed 11–15–99; 8:45 am]

BILLING CODE 4910–60–P

DEPARTMENT OF THE INTERIOR

Fish and Wildlife Service

50 CFR parts 25, 26, and 29

[1018–AE98]

Extension of Comment Period: Proposed Compatibility Regulations Pursuant to the National Wildlife Refuge System Improvement Act of 1997

AGENCY: Fish and Wildlife Service, Interior.

ACTION: Proposed rule; extension of comment period.

SUMMARY: We are extending the comment period on the **Federal Register** proposed rule dated September 9, 1999 (64 FR 49056) that invites the public to comment on our proposed compatibility regulations. We are also extending the comment period on the **Federal Register** notice dated September 9, 1999 (64 FR 49067) that invites the public to comment on our draft compatibility policy.

DATES: Submit comments on or before December 8, 1999.

ADDRESSES: Send comments concerning these proposed compatibility regulations via mail, fax or email to: Chief, Division of Refuges, U.S. Fish and Wildlife Service, 4401 North Fairfax Drive, Room 670, Arlington, Virginia 22203; fax (703)358–2248; e-mail Compatibility__Regulations __Comments@fws.gov.

FOR FURTHER INFORMATION CONTACT: Jim Kurth, Chief, Division of Refuges, U.S. Fish and Wildlife Service, Telephone (703)358–1744.

SUPPLEMENTARY INFORMATION: In a **Federal Register** proposed rule dated September 9, 1999, we published our proposed compatibility regulations describing the process for determining whether or not a use of a national wildlife refuge is a compatible use. We also published in a **Federal Register** notice dated September 9, 1999, our draft compatibility policy describing the process for determining whether or not a use of a national wildlife refuge is a compatible use. We received several requests to extend the public comment period beyond the November 8, 1999 due date. In order to ensure that the public has an adequate opportunity to review and comment on our draft policy and proposed regulations we are extending the comment period to December 8, 1999.

Primary Author: J. Kenneth Edwards, Refuge Program Specialist, Division of Refuges, U.S. Fish and Wildlife Service, is the primary author of this proposed rule.

Dated: November 9, 1999.

Jamie Rappaport Clark,

Director, Fish and Wildlife Service.

[FR Doc. 99–29851 Filed 11–15–99; 8:45 am]

BILLING CODE 4310–55–P

Notices

Federal Register
Vol. 64, No. 220
Tuesday, November 16, 1999

This section of the FEDERAL REGISTER contains documents other than rules or proposed rules that are applicable to the public. Notices of hearings and investigations, committee meetings, agency decisions and rulings, delegations of authority, filing of petitions and applications and agency statements of organization and functions are examples of documents appearing in this section.

DEPARTMENT OF AGRICULTURE

Submission for OMB Review; Comment Request

November 9, 1999.

The Department of Agriculture has submitted the following information collection requirement(s) to OMB for review and clearance under the Paperwork Reduction Act of 1995, Public Law 104–13. Comments regarding (a) whether the collection of information is necessary for the proper performance of the functions of the agency, including whether the information will have practical utility; (b) the accuracy of the agency's estimate of burden including the validity of the methodology and assumptions used; (c) ways to enhance the quality, utility and clarity of the information to be collected; (d) ways to minimize the burden of the collection of information on those who are to respond, including through the use of appropriate automated, electronic, mechanical, or other technological collection techniques or other forms of information technology should be addressed to: Desk Officer for Agriculture, Office of Information and Regulatory Affairs, Office of Management and Budget (OMB), Washington, D.C. 20503 and to Departmental Clearance Office, USDA, OCIO, Mail Stop 7602, Washington, D.C. 20250–7602. Comments regarding these information collections are best assured of having their full effect if received within 30 days of this notification. Copies of the submission(s) may be obtained by calling (202) 720–6746.

An agency may not conduct or sponsor a collection of information unless the collection of information displays a currently valid OMB control number and the agency informs potential persons who are to respond to the collection of information that such persons are not required to respond to the collection of information unless it displays a currently valid OMB control number.

Food and Nutrition Service

Title: Food Stamp Application Process.

OMB Control Number: 0584–0064.

Summary of Collection: The Food Stamp Act of 1977 (the Act) establishes a program whereby needy households may apply for and receive food stamp benefits. It specifies national eligibility standards and imposes certain administrative requirements on State agencies in administering the program. Information must be collected from households to assure that they are eligible for the program and that they receive the correct amount of food stamp benefits. Information collected is limited to that necessary for the administration and enforcement of the Food Stamp Program. The Act requires an adult representative to sign a statement, under penalty of perjury, that the information provided on the application is true and correct to the best of his/her knowledge, including information regarding the citizenship or alien status of each member. The Food and Nutrition Service (FNS) will use an application to collect information.

Need and Use of the Information: FNS will collect information to determine the eligibility of households for the Food Stamp Program and to determine the correct benefit levels for eligible households. The social security number will be used to check the identity of household members, to prevent duplicate participation, to make mass food stamp changes, and to verify information. If information is not collected to certify households in accordance with the Act or changing the frequency of information or reporting requirements as they relate to the application, certification, and continued eligibility of households would result in a direct violation of the Act. Further, benefits could be over issued or under issued for a long period of time if necessary information is not collected or actions are not taken timely.

Description of Respondents: State, Local, or Tribal Government; Individuals or households.

Number of Respondents: 18,071,800.

Frequency of Responses: Recordkeeping; reporting: On occasion; Monthly.

Total Burden Hours: 16,275,901.

Food and Nutrition Service

Title: Worksheet for Food Stamp Program Quality Control Reviews, FNS–380.

OMB Control Number: 0584–0074.

Summary of Collection: State agencies are required to perform Quality Control reviews for the Food Stamp Program. Section 16 of the Food Stamp Act of 1977 provides the legislative basis for the operation of the Food Stamp quality control system. Section 11(a) of the Food Stamp Act of 1977 provides the legislative basis for the recordkeeping requirements. The Food Stamp worksheet provides a systematic means of aiding the State agency's quality control reviewer in analyzing the household case record; planning and carrying out the field investigation; and gathering, comparing, analyzing and evaluating the review data. The Face Sheet of the form is used to record identifying information about the household and indicate the review findings. The Food and Nutrition Service (FNS) will collect information using Form FNS–380, Worksheet for Food Stamp Program Quality Control Review.

Need and Use of the Information: FNS will collect information to document and evaluate each step of the field investigation to determine eligibility and payment amounts under FNS approved State agency practices.

Description of Respondents: State, Local or Tribal Government; Federal Government.

Number of Respondents: 53.

Frequency of Responses: Recordkeeping; reporting: On occasion; Annually.

Total Burden Hours: 503,914.

Food and Nutrition Service

Title: Annual Report NET Program 7 CFR Part 227.

OMB Control Number: 0584–0062.

Summary of Collection: Section 19(g)(2) of the Child Nutrition Act of 1966, as amended, requires that ''State Educational agencies shall provide reports on expenditures of Federal funds, program participation, program cost, and related matters, in such form and at such times as the Secretary may prescribe.'' Section 227.30(f)(3) of the Nutrition Education and Training (NET) program regulations further require State agencies to submit to the Food and

Nutrition Service (FNS) an annual performance report of expenditures of funds received under this program. FNS will collect information using form FNS–42, Annual Report of the Nutrition and Education Training Program.

Need and Use of the Information: FNS will collect information to monitor and analyze the use of funds in accordance with the legislative mandate. If the information is not collected, FNS would be unable to respond to Congressional and public inquiries about use of funds in each fiscal year of program operation.

Description of Respondents: State, Local or Tribal Government.

Number of Respondents: 56.

Frequency of Responses: Recordkeeping; reporting; Annually.

Total Burden Hours: 896.

Nancy B. Sternberg,

Departmental Clearance Officer.

[FR Doc. 99–29864 Filed 11–15–99; 8:45 am]

BILLING CODE 3410–01–M

DEPARTMENT OF AGRICULTURE

Food and Nutrition Service

Agency Information Collection Activities: Proposed Collection; Comment Request—Form FNS–471, Coupon Account and Destruction Report

AGENCY: Food and Nutrition Service, USDA

ACTION: Notice.

SUMMARY: In accordance with the Paperwork Reduction Act of 1995, this notice invites the general public and other public agencies to comment on proposed information collections. Sections 7, 11, and 13 of the Food Stamp Act of 1977 are the bases for the information collected on Form FNS–471, Coupon Account and Destruction Report. The Food Stamp Act and regulations require an appropriate procedure for accounting for coupons that are no longer usable and subsequently destroyed by the State agency. The FNS–471 is used to document this process.

DATES: Written comments must be submitted on or before January 18, 2000 to be assured consideration.

ADDRESSES: Send comments to Barbara Hallman, Chief, State Administration Branch, Food and Nutrition Service, USDA, 3101 Park Center Drive, Alexandria, Virginia 22302.

Comments are invited on: (a) Whether the proposed collection of information is necessary for the proper performance of the functions of the agency, including whether the information will have practical utility; (b) the accuracy of the agency's estimate of the burden of the proposed collection of information, including the validity of the methodology and assumptions used; (c) ways to enhance the quality, utility, and clarity of the information to be collected; and (d) ways to minimize the burden of the collection of information on those who are to respond, including the use of appropriate, automated, electronic, mechanical, or other technological collection techniques or other forms of information technology.

All comments will be summarized and included in the request for Office of Management and Budget approval of the information collection. All comments will become a matter of public record.

FOR FURTHER INFORMATION CONTACT: Dawn Addison, (703) 305–2450.

SUPPLEMENTARY INFORMATION:

Title: Coupon Account and Destruction Report.

OMB Number: 0584–0053.

Form Number: FNS–471.

Expiration Date: October 31, 1999.

Type of Request: Revision of a currently approved collection.

Abstract: Sections 274.7(f), (g) and (h) of the Food Stamp Program regulations require that State agencies properly dispose of coupons that are received at issuance, claims collection, inventory, and bulk storage points, within 30 days after the end of the month in which the coupons are received. These are coupons received as payments on claims, mutilated or improperly manufactured coupons, old-series coupons that are exchanged for current series, and coupons returned for various other reasons. Coupon books returned intact and unsigned are reusable and returned to inventory. Since coupons are a Federal obligation, the value by denomination of unusable coupons, whether loose or in book form, must be documented and reported on Form FNS–471 and the coupons destroyed. Form FNS–471 is also used to document overages and shortages discovered by issuance and bulk storage points during coupon shipment or transfer. The information contained on the Form FNS–471 is necessary to substantiate coupon inventory and claims collection (coupon payment) data.

We are reducing the estimated burden from 40,331 hours to 12,127 hours to reflect the lower volume of coupons currently in circulation due to declining participation combined with the growth in the number of States currently using electronic benefits transfer (EBT) to issue benefits. Total issuance has decreased nearly 25 percent from fiscal year 1996 to fiscal year 1998. In addition, in fiscal year 1996, 15.31 percent of the benefits were issued through EBT. As of July 1999, EBT has increased to about 63.81 percent of the total benefits issued. As a result, coupon issuances have decreased from $18.7 billion in fiscal year 1996 to an estimated $6.2 billion in fiscal year 1999.

Affected Public: State and local governments.

Estimated Number of Respondents: 9,276.

Estimated Time per Response: 0.11 hours.

Estimated Total Annual Burden: 12,127 hours.

Dated: November 3, 1999.

Samuel Chambers, Jr.,

Administrator, Food and Nutrition Service.

[FR Doc. 99–29867 Filed 11–15–99; 8:45 am]

BILLING CODE 3410–30–U

DEPARTMENT OF AGRICULTURE

Forest Service

Newspapers Used for Publication of Legal Notice of Appealable Decisions for the Northern Region; Idaho, Montana, North Dakota, and Portions of South Dakota and Eastern Washington

AGENCY: Forest Service, USDA.

ACTION: Notice.

SUMMARY: This notice lists the newspapers that will be used by all Ranger Districts, Forests, and the Regional Office of the Northern Region to publish legal notice of all decisions subject to appeal under 36 CFR parts 215 and 217 and to publish notices for public comment and notice of decision subject to the provisions of 36 CFR part 215. The intended effect of this action is to inform interested members of the public which newspapers will be used to publish legal notices for public comment or decisions; thereby allowing them to receive constructive notice of a decision, to provide clear evidence of timely notice, and to achieve consistency in administering the appeals process.

DATES: Publication of legal notices in the listed newspapers will begin with decisions subject to appeal that are made on or after November 15, 1999. The list of newspapers will remain in effect until another notice is published in the **Federal Register**.

FOR FURTHER INFORMATION CONTACT: Acting Regional Appeals and Litigation Coordinator; Northern Region; PO Box 7669; Missoula, Montana 59807. Phone: (406) 329–3291.

The newspapers to be used are as follow:

Northern Regional Office

Regional Forester decisions in Montana:

The Missoulian, Great Falls Tribune, and The Billings Gazette.

Regional Forester decisions in Northern Idaho and Eastern Washington:

The Spokesman Review.

Regional Forester decisions in North Dakota: Bismarck Tribune.

Regional Forester decisions in South Dakota: Rapid City Journal.

Beaverhead/Deerlodge—Montana Standard

Bitterroot—Ravalli Republic

Clearwater—Lewiston Morning Tribune

Custer—Billings Gazette (Montana)

Rapid City Journal (South Dakota)

Dakota Prairie National Grasslands—Bismarck Tribune (North Dakota)

Rapid City Journal (South Dakota)

Flathead—Daily Interlake

Gallatin—Bozeman Chronicle

Helena—Independent Record

Idaho Panhandle—Spokeman Review

Kootenai—Daily Interlake

Lewis & Clark—Great Falls Tribune

Lolo—Missoulian

Nez Perce—Lewiston Morning Tribune

Supplemental notices may be placed in any newspaper, but time frames/deadlines will be calculated based upon notices in newspapers of record listed above.

Dated: November 8, 1999.

Kathleen A. McAllister,

Deputy Regional Forester.

[FR Doc. 99–29817 Filed 11–15–99; 8:45 am]

BILLING CODE 3410–11–M

DEPARTMENT OF AGRICULTURE

Forest Service

Lake Tahoe Basin Federal Advisory Committee

AGENCY: Forest Service, USDA.

ACTION: Notice of meeting.

SUMMARY: The Lake Tahoe Basin Federal Advisory Committee will hold a meeting on December 7, 1999, at the North Tahoe Conference Center, 1318 N. Lake Blvd. Kings Beach, CA 96143. This Committee, established by the Secretary of Agriculture on December 15, 1998 (64 FR 2876) is chartered to provide advice to the Secretary on implementing the terms of the Federal Interagency Partnership on the Lake Tahoe Region and other matters raised by the Secretary.

DATES: The meeting will be held December 7, 1999, beginning at 1 p.m. and ending at 4:30 p.m.

ADDRESSES: The meeting will be held at the North Tahoe Conference Center, 1318 N. Lake Blvd. Kings Beach, CA 96143.

FOR FURTHER INFORMATION CONTACT: Ed Gee or Jeannie Stafford, Lake Tahoe Basin Management Unit, Forest Service, 870 Emerald Bay Road Suite 1, South Lake Tahoe, CA 96150, (530) 573–2642.

SUPPLEMENTARY INFORMATION: The committee will meet jointly with the Lake Tahoe Basin Executives Committees. Items to be covered on the agenda include: (1) Watershed Assessment Subcommittee Report & Recommendations on the Watershed Assessment; (2) Report on The Science Advisory Committee; (3) Issues Related To Use of Consensus Process; and (4) Open Public Comment. All Lake Tahoe Basin Federal Advisory Committee meetings are open to the public. Interested citizens are encouraged to attend. Issues may be brought to the attention of the Committee during the open public comment period at the meeting or by filing written statements with the Secretary for the Committee before or after the meeting. Please refer any written comments to the Lake Tahoe Basin Management Unit at the contact address stated above.

Dated: November 8, 1999.

Maribeth Gustafson,

Acting Deputy Forest Supervisor.

[FR Doc. 99–29816 Filed 11–15–99; 8:45 am]

BILLING CODE 3410–11–M

DEPARTMENT OF COMMERCE

Submission For OMB Review; Comment Request

DOC has submitted to the Office of Management and Budget (OMB) for clearance the following proposal for collection of information under the provisions of the Paperwork Reduction Act (44 U.S.C. chapter 35).

Agency: U.S. Census Bureau.

Title: Census 2000, Evaluation of the Facility Questionnaire.

Form Number(s): None.

Agency Approval Number: None.

Type of Request: New collection.

Burden: 220 hours.

Number of Respondents: 1,000.

Avg Hours Per Response: 12 minutes.

Needs and Uses: The Census Bureau must provide everyone in the United States and Outlying Areas the opportunity to be counted in Census 2000 as well as making sure that persons are counted in the appropriate places such as places defined as special Places (SP). SPs include such places as colleges and universities, nursing homes, halfway houses, and correctional facilities. The Census 2000 Special Place Facility Questionnaire is an operation in which updated information is gathered from operators of SPs on the group quarters (GQs) and housing units located at the SP and GQ codes are assigned. The GQ code is a critical component to correctly tabulating census data for different types of GQs. Interviews are conducted either by telephone using Computer-assisted Telephone Interviewing (CATI) or by personal visit. This operation, cleared previously by the Office of Management and Budget under approval number 0607–0786, began in October 1998 and will conclude in July 1999.

To evaluate this operation, the Census Bureau is proposing to conduct a follow-up operation of 1,000 cases. The reinterview will be conducted via personal visits administered by specially trained interviewers using a paper questionnaire that has been modified from the production questionnaire. The information collected during the reinterviews will concern the types of services the facility provides, the number of persons that reside within the facility, and what types of GQs are associated with the facility. All information collected will be pertinent to verifying the accuracy of the GQ code.

We will use these data to determine: (1) How well the facility questionnaire performed by assessing the frequency with which the GQ code was different between the production interview and reinterview, (2) whether or not there was a significant difference in the occurrence of GQ code change by special place type, and (3) whether or not CATI versus personal visit increased data quality by computing item nonresponse rates. The evaluation interviews will be conducted in six regions during January 2000.

Affected Public: Individuals or households.

Frequency: One-time.

Respondent's Obligation: Voluntary.

Legal Authority: Title 13 U.S.C., Sections 141 and 193.

OMB Desk Officer: Susan Schechter, (202) 395–5103.

Copies of the above information collection proposal can be obtained by calling or writing Linda Engelmeier, DOC Forms Clearance Officer, (202) 482–3272, Department of Commerce, room 5027, 14th and Constitution Avenue, NW, Washington, DC 20230 (or via the Internet at LEngelme@doc.gov).

Written comments and recommendations for the proposed information collection should be sent within 30 days of publication of this notice to Susan Schechter, OMB Desk Officer, room 10201, New Executive Office Building, Washington, DC 20503.

Dated: November 10, 1999.

Linda Engelmeier,

Departmental Forms Clearance Officer, Office of the Chief Information Officer.

[FR Doc. 99–29873 Filed 11–15–99; 8:45 am]

BILLING CODE 3510–07–P

DEPARTMENT OF COMMERCE

International Trade Administration

Extension of Time Limit for Final Results of Five-Year Reviews

AGENCY: Import Administration, International Trade Administration, Department of Commerce.

ACTION: Notice of extension of time limit for final Results of Five-Year (''Sunset'') Reviews.

SUMMARY: The Department of Commerce (''the Department'') is extending the time limit for the final results of 18 expedited sunset reviews initiated on July 1, 1999 (64 FR 35588) covering various antidumping and countervailing duty orders. Based on adequate responses from domestic interested parties and inadequate responses from respondent interested parties, the Department is conducting expedited sunset reviews to determine whether revocation of the antidumping and countervailing duty orders would be likely to lead to continuation or recurrence of dumping or a countervailable subsidy. As a result of these extensions, the Department intends to issue its final results not later than January 27, 2000.

EFFECTIVE DATE: November 16, 1999.

FOR FURTHER INFORMATION CONTACT: Mark D. Young or Melissa G. Skinner, Import Administration, International Trade Administration, U.S. Department of Commerce, 14th Street and Constitution Avenue, NW, Washington, D.C. 20230; telephone: (202) 482–3207, or (202) 482–1560 respectively.

Extension of Final Results

In accordance with section 751(c)(5)(C)(v) of the Tariff Act of 1930, as amended (''the Act''), the Department may treat a sunset review as extraordinarily complicated if it is a review of a transition order (*i.e.*, an order in effect on January 1, 1995). The Department has determined that the sunset reviews of the following antidumping and countervailing duty orders are extraordinarily complicated:

A–570–805 Sulfur Chemicals (Sodium Thiosulfate) from the People's Republic of China
A–428–807 Sulfur Chemicals (Sodium Thiosulfate) from Germany
A–412–805 Sulfur Chemicals (Sodium Thiosulfate) from the United Kingdom
A–533–808 Stainless Steel Wire Rods from India
A–351–819 Stainless Steel Wire Rods from Brazil
A–427–811 Stainless Steel Wire Rods from France
C–469–004 Stainless Steel Wire Rods from Spain
A–580–810 Welded Stainless Steel Pipes from Korea
A–583–815 Welded Stainless Steel Pipes from Taiwan
A–403–801 Fresh & Chilled Atlantic Salmon from Norway
C–403–802 Fresh & Chilled Atlantic Salmon from Norway
A–580–807 Polyethylene Terephthalate Film from Korea
A–570–804 Sparklers from the People's Republic of China
A–588–702 Stainless Steel Butt-Weld Pipe Fittings from Japan
A–580–813 Stainless Steel Butt-Weld Pipe Fittings from Korea
A–583–816 Stainless Steel Butt-Weld Pipe Fittings from Taiwan
A–570–803 Heavy Forged Hand Tools (Axes and Adzes) from the People's Republic of China
A–570–803 Heavy Forged Hand Tools (Picks and Mattocks) from the People's Republic of China

Therefore, the Department is extending the time limit for completion of the final results of these reviews until not later than January 27, 2000, in accordance with section 751(c)(5)(B) of the Act.

Dated: October 18, 1999.

Richard W. Moreland,

Acting Assistant Secretary for Import Administration.

[FR Doc. 99–29906 Filed 11–15–99; 8:45 am]

BILLING CODE 3510–DS–P

DEPARTMENT OF COMMERCE

International Trade Administration

Antidumping or Countervailing Duty Order, Finding, or Suspended Investigation; Opportunity To Request Administrative Review

AGENCY: Import Administration, International Trade Administration, Department of Commerce.

ACTION: Notice of opportunity to request administrative review of antidumping or countervailing duty order, finding, or suspended investigation.

Background

Each year during the anniversary month of the publication of an antidumping or countervailing duty order, finding, or suspension of investigation, an interested party, as defined in section 771(9) of the Tariff Act of 1930, as amended, may request, in accordance with § 351.213 of the Department of Commerce (the Department) Regulations (19 CFR 351.213 (1997)), that the Department conduct an administrative review of that antidumping or countervailing duty order, finding, or suspended investigation.

Opportunity To Request a Review: Not later than the last day of November 1999, interested parties may request administrative review of the following orders, findings, or suspended investigations, with anniversary dates in November for the following periods:

ANTIDUMPING DUTY PROCEEDINGS	*Periods*
Argentina: A–357–405—Barbed Wire & Barbless Fencing Wire	11/1/98–10/31/99
Argentina: A–357–007—Carbon Steel Wire Rods	11/1/98–10/31/99
Brazil: A–351–809—Circular Welded Non-Alloy Steel Pipe	11/1/98–10/31/99
Japan: A–588–038—Bicycle Speedometers	11/1/98–10/31/99
Japan: A–588–813—Light Scattering Instruments	11/1/98–10/31/99
Mexico: A–201–805—Circular Welded Non-Alloy Steel Pipe	11/1/98–10/31/99
Singapore: A–559–502—Light-Walled Rectangular Pipe & Tube	11/1/98–10/31/99
Republic of Korea: A–580–809—Circular Welded Non-Alloy Steel Pipe	11/1/98–10/31/99
Taiwan: A–583–814—Circular Welded Non-Alloy Steel Pipe	11/1/98–10/31/99
Taiwan: A–583–826—Collated Roofing Nails	11/1/98–10/31/99
The People's Republic of China: A–570–850—Collated Roofing Nails	11/1/98–10/31/99
The People's Republic of China: A–570–831—Garlic	11/1/98–10/31/99

The People's Republic of China: A–570–826—Paper Clips	11/1/98–10/31/99
The People's Republic of China: A–570–811—Tungsten Ore Concentrates	11/1/98–10/31/99
Venezuela: A–307–805——Circular Welded Non-Alloy Steel Pipe	11/1/98–10/31/99

COUNTERVAILING DUTY PROCEEDINGS

None.

SUSPENSION AGREEMENTS

Japan: A–588–090—Certain Small Electric Motors of 5 to 150 Horsepower	11/1/98–10/31/99
Mexico: A–201–820—Fresh Tomatoes	11/1/98–10/31/99
Russia: A–821–808—Cut-to-Length Carbon Steel Plate	11/1/98–10/31/99
South Africa: A–791–804—Cut-to-Length Carbon Steel Plate	11/1/98–10/31/99
The People's Republic of China: A–570–849—Cut-to-Length Carbon Steel Plate	11/1/98–10/31/99
The Ukraine: A–823–808—Cut-to-Length Carbon Steel Plate	11/1/98–10/31/99
Ukraine: A–823–805—Silicomanganese	11/1/98–10/31/99

In accordance with section 351.213 of the regulations, an interested party as defined by section 771(9) of the Act may request in writing that the Secretary conduct an administrative review. The Department has changed its requirements for requesting reviews for countervailing duty orders. Pursuant to 771(9) of the Act, an interested party must specify the individual producers or exporters covered by the order or suspension agreement for which they are requesting a review (Department of Commerce Regulations, 62 FR 27295, 27424 (May 19, 1997)). Therefore, for both antidumping and countervailing duty reviews, the interested party must specify for which individual producers or exporters covered by an antidumping finding or an antidumping or countervailing duty order it is requesting a review, and the requesting party must state why it desires the Secretary to review those particular producers or exporters. If the interested party intends for the Secretary to review sales of merchandise by an exporter (or a producer if that producer also exports merchandise from other suppliers) which were produced in more than one country of origin and each country of origin is subject to a separate order, then the interested party must state specifically, on an order-by-order basis, which exporter(s) the request is intended to cover.

Seven copies of the request should be submitted to the Assistant Secretary for Import Administration, International Trade Administration, Room 1870, U.S. Department of Commerce, 14th Street & Constitution Avenue, NW, Washington, DC 20230. The Department also asks parties to serve a copy of their requests to the Office of Antidumping/Countervailing Enforcement, Attention: Sheila Forbes, in room 3065 of the main Commerce Building. Further, in accordance with § 351.303(f)(l)(i) of the regulations, a copy of each request must be served on every party on the Department's service list.

The Department will publish in the **Federal Register** a notice of ''Initiation of Administrative Review of Antidumping or Countervailing Duty Order, Finding, or Suspended Investigation'' for requests received by the last day of November 1999. If the Department does not receive, by the last day of November 1999, a request for review of entries covered by an order, finding, or suspended investigation listed in this notice and for the period identified above, the Department will instruct the Customs Service to assess antidumping or countervailing duties on those entries at a rate equal to the cash deposit of (or bond for) estimated antidumping or countervailing duties required on those entries at the time of entry, or withdrawal from warehouse, for consumption and to continue to collect the cash deposit previously ordered.

This notice is not required by statue but is published as a service to the international trading community.

Dated: November 9, 1999.

Holly A. Kuga,

Acting Deputy Assistant Secretary, Group II for AD/CVD Enforcement.

[FR Doc. 99–29907 Filed 11–15–99; 8:45 am]

BILLING CODE 3510–DS–M

DEPARTMENT OF COMMERCE

International Trade Administration

(A–570–007)

Barium Chloride From the People's Republic of China; Final Results of Antidumping Duty Administrative Review

AGENCY: Import Administration, International Trade Administration, Department of Commerce.

ACTION: Notice of final results of the antidumping duty administrative review of Barium Chloride from the People's Republic of China.

SUMMARY: On July 12, 1999, the Department of Commerce (the Department) published the preliminary results of its administrative review of the antidumping duty order on barium chloride from the People's Republic of China (PRC) covering the period October 1, 1997 through September 30, 1998. This review covers the following Chinese manufacturers/exporters of the subject merchandise: Hebei Xinji Chemical Plant (Hebei); Hengnan Chemical Factory (Hengnan); Kunghan Chemical Factory (Kunghan); Linshu Chemical Factory (Linshu); Qingdao Red Star Chemical Group Co. (Red Star); Sichuan Emeishan Salt Chemical Industry Group Company, Ltd. (Sichuan); Sinochem (U.S.A.) (Sinochem); Tangshan Chemical Factory (Tangshan); Tianjin Chemical Industry Corporation (Tianjin); Tianjin Bohai Chemical United Import/Export Company (Tianjin Bohai); and Zhangjiaba Salt Chemical Plant (Zhangjiaba). We gave interested parties an opportunity to comment on the preliminary results of review but received no comments. Therefore, these final results of review have not changed from those presented in the preliminary results of review, in which we applied total adverse facts available.

EFFECTIVE DATE: November 16, 1999.

FOR FURTHER INFORMATION CONTACT: Nova J. Daly or Thomas Futtner, AD/CVD Enforcement, Group II, Office Four, Import Administration, International Trade Administration, U.S. Department of Commerce, 14th Street and Constitution Avenue, NW, Washington, DC 20230; telephone (202) 482–0989, and 482–3814, respectively.

SUPPLEMENTARY INFORMATION:

The Applicable Statute

Unless otherwise indicated, all citations to the Tariff Act of 1930, as amended (the Act), are references to the provisions as of January 1, 1995, the effective date of the amendments made to the Act by the Uruguay Round Agreements Act (URAA). In addition, unless otherwise indicated, all citations to the Department's regulations are to the regulations at 19 CFR part 351 (1998).

Scope of the Review

The imports covered by this review are shipments of barium chloride, a chemical compound having the formulas BaCl2 or BaCl2–2H2O, currently classifiable under item number 2827.38.00 of the Harmonized Tariff Schedule (HTS). Although the HTS item number is provided for convenience and for Customs purposes, the written description remains dispositive.

Background

On July 12, 1999, we published in the **Federal Register** (64 FR 37498) the preliminary results of the review of this order. We gave interested parties an opportunity to comment on our preliminary results. We received no comments. In the preliminary results, we determined that it was appropriate to use, as adverse facts available for the PRC-wide rate, the highest rate from this or previous segments of the proceeding. We selected Sinochem's rate of 60.84 percent from *Barium Chloride From the People's Republic of China; Final Results of Antidumping Duty Administrative Review*, 57 FR 29467 (July 2, 1992). The Department has now completed the administrative review in accordance with section 751 of the Act.

Final Results of Review

Because we received no comments from interested parties, we have determined that no changes to the preliminary results are warranted for purposes of these final results. The weighted-average dumping margin for the period October 1, 1997 through April 30, 1998 is as follows:

Manufacturer/producer/exporter	Weighted-average margin percentage
PRC-wide Rate	60.84

The Department will issue appraisement instructions directly to the Customs Service. Furthermore, the following deposit requirements will be effective upon publication of the final results of this administrative review for all shipments of barium chloride from the PRC entered, or withdrawn from warehouse, for consumption on or after the publication date, as provided for by section 751(a)(1) of the Act: (1) The cash deposit rate for all Chinese exporters will be the rate established in the final results of this review; and (2) for non-PRC exporters of subject merchandise from the PRC, the cash deposit rate will be the rate applicable to their PRC suppliers. These deposit requirements, when imposed, shall remain in effect until publication of the final results of the next administrative review.

This notice serves as a final reminder to importers of their responsibility under 19 CFR 351.402(f) to file a certificate regarding the reimbursement of antidumping duties prior to liquidation of the relevant entries during this review period. Failure to comply with this requirement could result in the Department's presumption that reimbursement of antidumping duties occurred and the subsequent assessment of double antidumping duties.

This notice also serves as the only reminder to parties subject to administrative protective order (APO) of their responsibility concerning the disposition of proprietary information disclosed under APO in accordance with 19 CFR 351.305(a)(3). Timely notification of return/destruction of APO materials or conversion to judicial protective order is hereby requested. Failure to comply with the regulations and the terms of an APO is a sanctionable violation.

This administrative review and notice are in accordance with section 751(a)(1) of the Act (19 U.S.C. 1675(a)(1)), section 777(i) of the Act (19 U.S.C. section 1677f(i)), and 19 CFR 351.221.

Dated: November 3, 1999.

Robert S. LaRussa,

Assistant Secretary for Import Administration.

[FR Doc. 99–29909 Filed 11–15–99; 8:45 am]

BILLING CODE 3510–DS–P

DEPARTMENT OF COMMERCE

International Trade Administration

[A–484–801]

Electrolytic Manganese Dioxide From Greece: Final Results of Antidumping Duty Administrative Review

AGENCY: Import Administration, International Trade Administration, Department of Commerce

ACTION: Notice of final results of antidumping duty administrative review

SUMMARY: On May 10, 1999, the Department of Commerce published the preliminary results of the administrative review of the antidumping duty order on electrolytic manganese dioxide from Greece. The review covers one producer/exporter, Tosoh Hellas A.I.C., during the period of review April 1, 1997, through March 31, 1998.

We gave interested parties an opportunity to comment on the preliminary results. After our analysis of the comments received, we made no changes for the final results.

EFFECTIVE DATE: November 16, 1999.

FOR FURTHER INFORMATION CONTACT: Hermes Pinilla or Richard Rimlinger, Import Administration, International Trade Administration, U.S. Department of Commerce, Washington, DC 20230; telephone: (202) 482–3477 or (202) 482–4477, respectively.

SUPPLEMENTARY INFORMATION:

The Applicable Statute and Regulations

Unless otherwise indicated, all citations to the statute are references to the provisions effective January 1, 1995, the effective date of the amendments made to the Tariff Act of 1930, as amended (the Act), by the Uruguay Round Agreements Act (URAA). In addition, unless otherwise indicated, all citations to the Department of Commerce's (the Department's) regulations are to 19 CFR part 351 (1998).

Background

On May 10, 1999, we published in the **Federal Register** the preliminary results of the administrative review of the antidumping duty order on electrolytic manganese dioxide (EMD) from Greece. *Preliminary Results of Antidumping Duty Administrative Review: Electrolytic Manganese Dioxide from Greece*, 64 FR 25008 (preliminary results). Kerr-McGee Chemical LLC and Chemetals, Inc. (collectively the petitioners), submitted their case brief on August 10, 1999. Tosoh Hellas A.I.C. (Tosoh), the sole respondent in this review, did not submit a case brief. Tosoh submitted its rebuttal brief on August 17, 1999. The Department has conducted this administrative review in accordance with section 751(a) of the Act.

Scope of Review

Imports covered by this review are shipments of EMD from Greece. EMD is manganese dioxide (MnO_2) that has been refined in an electrolysis process. The subject merchandise is an intermediate product used in the production of dry-cell batteries. EMD is sold in three physical forms, powder, chip, or plate, and two grades, alkaline and zinc-chloride. EMD in all three forms and both grades is included in the scope of the order. This merchandise is currently classifiable under item number 2820.10.0000 of the Harmonized Tariff Schedule (HTS) of the United States. The HTS number is provided for convenience and customs purposes. It is not determinative of the products subject to the order. The written product description remains dispositive.

Selection of Comparison Market

Prior to the issuance of the preliminary results, the petitioners alleged that, although viable, Tosoh's home market is not a suitable market in which to establish normal value. The petitioners also alleged that the EMD grade Tosoh sold in the home market is not a foreign like product as set forth in section 771(16)(B) of the Act and that a particular market situation exists which warrants the rejection of home market sales for consumption as the basis for normal value.

For our preliminary results we determined that Tosoh's home market was appropriate to use in the determination of normal value. In the interest of full consideration, however, we requested additional information from Tosoh to determine whether the two products in question are commercially comparable. See preliminary results. Our analysis and conclusions with regard to these issues have been addressed below.

Analysis of Comments Received

Issues raised in the briefs by the petitioners and Tosoh are addressed below.

Comment 1: Foreign Like Product—Like in Component Material

The petitioners argue that the EMD (i.e., zinc-chloride-grade EMD) Tosoh sold in the home market is not a foreign like product as defined in section 771(16)(B) of the Act because it is not ''like the exported product in component material or materials.'' The petitioners assert that the raw materials used in the manufacture of the home market product are unlike the raw materials used in the manufacture of the merchandise sold to the United States. They argue that the difference arises because Tosoh includes the cost of a certain item (the identity of which is proprietary information) in its home market variable cost of manufacture whereas it does not include the cost of a corresponding item in its U.S. variable cost of manufacture. The petitioners contend that the Department's 20-percent difference-in-merchandise test will not address the differences in materials adequately. In sum, they argue that the difference in component materials is such that the merchandise is not ''like in component materials'' as required under section 771(16)(B)(ii) of the Act.

Tosoh argues that the two types of EMD are ''like'' in component materials since they have the same physical structure, are manufactured using the same component materials, and meet the same minimum chemical-property specifications. In addition, according to Tosoh, both types of EMD are produced using the same basic production process on the same production line. Furthermore, Tosoh contends that the item of concern to the petitioners is not a component material and has very little bearing on the cost of production of EMD, as demonstrated by the fact that the difference in cost of the two EMD types at issue here is well within the Department's 20-percent difference-in-merchandise standard. Therefore, according to Tosoh, the Department concluded correctly that the two EMD types are ''like'' in component materials.

Department's Position: We continue to find, as we stated in our April 29, 1999, Memorandum (see Memorandum to Richard W. Moreland, available in our Central Records Unit, Room B–099 (April 29 Memorandum)), that the product sold in the home market is a foreign like product on which we can base normal value under section 771(16)(B) of the Act. First of all, the most important component materials (i.e., manganese ore, heavy oil, sulfuric acid, etc.) of the U.S. and home market products are the same.

Further, the difference identified by the petitioners is not a difference in component materials but rather a difference in the equipment used in the manufacturing processes. Although Tosoh listed the equipment as a ''raw material,'' this designation was solely for accounting purposes because the useful life of the equipment is less than one year.

Finally, our difference-in-merchandise adjustment is based on actual physical differences in the products and is calculated on the basis of variable manufacturing costs. We include the cost of materials, labor, and variable factory overhead as direct manufacturing costs in our difference-in-merchandise adjustment, and any distinction in such costs between the subject merchandise and the foreign like product will be subject to our 20-percent difference-in-merchandise test. See Import Administration Policy Bulletin, No. 92.2 (July 29, 1992). The differences in direct manufacturing cost of the two products at issue here, zinc-chloride-grade and alkaline-grade EMD, meet our 20-percent guideline.

In conclusion, for these reasons, we find that the subject merchandise sold in the home market meets the foreign-like-product criterion at section 771(16)(B)(ii) of the Act.

Comment 2: Foreign Like Product—Purposes for Which Used

The petitioners contend that the home market product is not a foreign like product as defined in section 771(16)(B) of the Act because it is not ''like in the purposes for which used.'' According to the petitioners, the Department made two fundamental errors in addressing this question in its April 29 Memorandum.

First, the petitioners assert, the Department erred by considering the relevant use to be the common use of the home market product rather than the use of particular sales. In this case, the petitioners claim, the EMD sold in the home market was used as an additive in battery cells in which natural manganese dioxide (NMD) is the principal cathode material. According to the petitioners, in this application, the EMD does not act as the principal cathode material but as an enriching agent to improve the performance of NMD in these old-fashioned cells. Therefore, according to the petitioners, the EMD Tosoh sold in the home market is of a lower quality and sells for a lower price than the EMD exported by Tosoh to the United States, and was not sold for the same purposes for which the EMD sold to the United States was used.

The petitioners assert that the Department's second error was in considering any use as a cathode material in battery applications to be sufficient to establish that the exported and home market products are alike in the purposes for which used. The petitioners argue that the April 29 Memorandum cites no evidential basis or rationale for this finding. According to the petitioners, it is the difference in the ways in which the types of EMD are used in battery cathodes that substantially affects their commercial value.

Tosoh argues that the petitioners' assertion that the home market EMD type is used as an additive to the cathode material and that the U.S. EMD type is used unadulterated as the cathode material is inaccurate and also irrelevant. Tosoh asserts that, in its questionnaire, the Department describes the product covered simply as an intermediate product used in the production of dry-cell batteries. According to Tosoh, this is how customers use the EMD it sells both in the United States and in the home market. In addition, Tosoh asserts that, on April 6, 1999, it submitted a letter from its home market customer confirming that it used the home market EMD type as 100 percent of the cathode material in several types of batteries it

produces. According to Tosoh, even if EMD sold in the home market were never used as 100 percent of the cathode material, that would still not suffice to demonstrate that the two EMD grades are not ''like'' in the ''purposes for which used.'' Citing *Koyo Seiko* v. *United States*, 66 F.3d 1204, 1210 (Fed. Cir. 1995), Tosoh asserts that the court held unequivocally that ''it is not necessary to ensure that home market models are technically substitutable, purchased by the same type of customers, or applied to the same end use as the U.S. model.'' In this case, according to Tosoh, its home market customer uses Tosoh's EMD in the cathode mixture of dry-cell batteries, either as 100 percent of the cathode or as a component of the cathode mixture. Tosoh asserts that the EMD performs essentially the same function in both types of batteries. In closing, Tosoh contends that the petitioners have offered nothing to undermine the Department's decision in the preliminary results that the two types of EMD have like uses.

Department's Position: As we stated in our April 29 Memorandum, Tosoh's customers use both types of EMD grades as a cathode material, which provides the electric charge needed for a battery to perform. The petitioners have not brought forth any substantial evidence to contradict this fact. Whether Tosoh's home market customer uses its EMD in the cathode mixture of dry-cell batteries as 100 percent of the cathode or as a component of the cathode mixture is irrelevant. The fact still remains that the EMD produced by Tosoh for sale in the home market is an intermediate product used in the production of dry-cell batteries. Specifically, both products are used as a cathode material in dry-cell batteries. See *United States International Trade Commission's Determination of Electrolytic Manganese Dioxide from Greece and Japan*, USITC Pub. 2177 (April 1989) at page 3.

In addition, there is no evidence on the record, nor do the petitioners cite to any evidence, that suggests that EMD as a cathode material can only have one particular use in battery applications. Therefore, our rationale in this regard conforms with the express language of section 771(16)(B)(ii) of the Act, and we find that, based on the reasons set forth above, the home market product meets the foreign-like-product criterion at section 771(16)(B)(ii) of the Act.

Comment 3: Foreign Like Product—Commercial Value Criterion

The petitioners argue that the home market product is not a foreign like product under section 771(16)(B) of the Act because it is not ''approximately equal in commercial value to'' the exported product. The petitioners argue first that the Department should find that the home market product is not approximately equal in commercial value to the exported product as facts available because Tosoh did not respond fully to the Department's request for information regarding its sales of all alkaline-grade and all zinc-chloride-grade EMD in the three largest markets in which it sold both grades of EMD. According to the petitioners, Tosoh interpreted the Department's request too narrowly in its May 5, 1999, submission by not including the three largest third-country markets to which it sold both any type of zinc-chloride-grade EMD and any type of alkaline-grade EMD. The petitioners contend that Tosoh reported only one third-country market in which it sold one particular type of alkaline-grade EMD and one particular type of zinc-chloride-grade EMD. According to the petitioners, Tosoh manufactures several types of both zinc-chloride-grade EMD and alkaline-grade EMD. The petitioners assert that, in view of the limited number of battery producers, the chances of there being markets in which Tosoh sold any one of its alkaline-grade EMD and any one of its zinc-chloride-grade EMD are much higher than the chances of there being markets in which Tosoh sold any two specific designations (*i.e.*, EMD sub-grades) of its EMD. Therefore, according to the petitioners, because Tosoh did not respond adequately to the Department's request, the Department should use as facts available the petitioners' information, which, the petitioners claim, demonstrates that zinc-chloride-grade EMD is not approximately equal to alkaline-grade EMD in commercial value.

Second, the petitioners contend that, even if the Department accepts Tosoh's May 5, 1999, response, the record demonstrates that the two products in question are not ''approximately equal in commercial value.'' According to the petitioners, the record demonstrates that the particular type of zinc-chloride-grade EMD Tosoh sold to its third-country customer is not sold for use as the cathode in dry-cell batteries. The petitioners contend that this is significant to the Department's assessment of the evidence of the third-country sales information Tosoh provided.

Tosoh argues that it has supplied the Department with conclusive evidence that the two types of EMD at issue here, when sold in a third-country market, are equal in commercial value. Tosoh argues that the petitioners' complaint regarding its submission of third-country price information is unfounded. According to Tosoh, the Department addressed the petitioners' assertions fully and correctly in its July 27, 1999, Memorandum, in which the Department reaffirmed its preliminary decision that the two types of EMD at issue here ''are commercially comparable'' and stated that the information Tosoh submitted on May 5, 1999, supports the Department's preliminary results.

In addition, Tosoh contends that the petitioners have attempted to read the Department's third-country sales information request more broadly than it was written, asserting that the Department's request should be read to ask for sales data for countries in which any combination of Tosoh's grades of EMD are sold. According to Tosoh, such a reading flatly contradicts the Department's and the petitioners' own stated intention in requesting third-country sales information, which was to determine the price comparability of the type of EMD sold to the United States vis-à-vis the home market, which the petitioners were questioning with respect to the sales in Greece and the United States during the review period. Tosoh asserts that the Department requested information regarding ''both types of grades'', which refers to the types of EMD grades sold in the U.S. and home markets during the review period. Morever, Tosoh contends that no other types of EMD are really relevant from the standpoint of testing whether the types of EMD sold in Greece and to the United States during the review period are ''approximately equal in commercial value.''

Tosoh asserts further that, because it has provided complete and accurate information in response to the Department's requests regarding the sole market in which both types of EMD grades were sold during the review period, there is no basis for the application of facts available in this case. Furthermore, Tosoh contends that, because it has cooperated fully with the Department's information requests, there is also no basis for the application of an adverse inference in this case.

Department's Position: We continue to find, as we stated in our July 27, 1999, Memorandum (see Memorandum to Richard W. Moreland, available in our Central Records Unit, Room B–099 (July 27 Memorandum)), that the two EMD grades (*i.e.*, alkaline and zinc-chloride) are ''approximately equal in commercial value'' as set forth in section 771(16)(B)(iii) of the Act. We find that Tosoh responded appropriately

to our April 28, 1999, request concerning whether the two products (*i.e.*, alkaline-grade and zinc-chloride-grade EMD) are commercially comparable. Per our request, Tosoh provided us with information concerning the quantity and value of two specific EMD grade types sold in one third-country market. The two specific EMD grade types are identical to the EMD grade types sold in the U.S. and home markets during the review period. Therefore, since the two EMD grades types reported by Tosoh are relevant for our purpose in considering whether the two products in question are commercially comparable, we did not request additional information. See July 27 Memorandum. Moreover, given the fact that, in this review, we were addressing the issue of whether these two specific EMD grades were commercially comparable, we find that Tosoh's response to our request was reasonable. Thus, we find that Tosoh complied fully with our request for third-country information. In addition, since Tosoh complied with our request, we find no reason to apply facts available in this regard.

Moreover, we are not persuaded by the petitioners' assertion and evidence that Tosoh's zinc-chloride-grade EMD sales to its third-country customer were not used as a cathode mixture in the production of dry-cell batteries. As we stated in our July 27 Memorandum, Tosoh provided an affidavit from its Director of Sales in which he states that, during the review period, Tosoh's third-country customer purchased EMD from Tosoh for use as a cathode mixture in the manufacture of primary (*i.e.*, non-rechargeable) dry-cell batteries.

In addition, the information Tosoh submitted on May 5, 1999, in response to our questions indicates that the prices of the two products are comparable and therefore are approximately equal in commercial value. See July 27 Memorandum. For these reasons, we find that the home market product meets the foreign-like-product criterion at section 771(16)(B)(iii) of the Act.

Comment 4: Home Market Viability/ Particular Market Situation

The petitioners argue that the five-percent viability test should not be regarded as conclusive of home market viability in this case because of the very small volume of U.S. sales in the review period. The petitioners assert that, in reflexively applying the five-percent test without further analysis in these circumstances, the Department ignored its own regulations and the Statement of Administrative Action (SAA), H. Doc. 103–316, vol. 1, 103d Cong., 2d sess., 822 (1994), both of which state that the five-percent test is not conclusive in every case. According to the petitioners, the SAA states that use of the five-percent viability test is particularly inappropriate where there are ''thin'' home market sales. The petitioners argue that, for the final results, the Department must address the following considerations: the Department cannot apply the difference-in-merchandise test as contemplated by the statute to adjust for differences in the physical characteristics of the product sold in Greece; the home market sales involve sales of EMD for an unusual use; Tosoh's home market is so small that sales in the market can have no material effect on the company's profitability and therefore are incidental to Tosoh. These facts, according to the petitioners, coupled with the export orientation of Tosoh, provide another basis for finding a particular market situation and relying on third-country sales in the determination of normal value.

Citing the Department's decision to use third-country sales in the *Final Determination of Sales at Less Than Fair Value; Fresh Salmon From Chile,* 63 FR 31418 (June 9, 1998) (*Salmon from Chile*), the petitioners contend that, like the Chilean salmon producers, Tosoh was established to make export sales and, as the Department found of the Chilean salmon industry, Tosoh's growth has been almost entirely export driven. According to the petitioners, the Department did not address this consideration in its April 29 Memorandum. Furthermore, the petitioners contend that the record demonstrates that the home market sales are in fact not representative and not an appropriate basis for determining normal value because they consist of a very small percentage of Tosoh's reported production volume and sales volume. According to the petitioners, this sales base is too small to constitute a viable home market.

Finally, according to the petitioners, the SAA notes that the change in the viability test from a comparison between home market sales volume and third-country sales volume to a comparison between home market sales volume and the U.S. sales volume was made to prevent the use of ''thin'' home markets as the basis for identifying dumping. According to the petitioners, such a ''thin'' home market clearly exists in this case and it should not be used as the basis for determining normal value. Therefore, the petitioners request that the Department find that Tosoh's home market sales in the review period are not viable, in spite of meeting the five-percent test.

Tosoh asserts that the petitioners' argument that the Department should depart from its statutory test and instead judge the viability of the home market based on the size of the Greek market relative to sales to third countries is incorrect under current law. Tosoh argues that the petitioners' citation of the SAA at 821 is misplaced. According to Tosoh, contrary to the petitioners' assertion, the SAA makes clear that it is precisely the new law's requirement of using U.S. sales as the viability benchmark that will prevent the use of ''thin'' home markets as the basis for identifying dumping. Moreover, Tosoh contends that the ''thinness'' discussed in the SAA refers to a situation where a high volume or value of home market sales compared to third-country sales would, under the old law, lead to a finding of viability even though home market sales were very small relative to U.S. sales and thus could interfere with a reasonable comparison of U.S. prices to home market prices. Thus, according to Tosoh, the SAA makes clear that the shift to U.S. sales as the viability benchmark solves the ''thinness'' problem the petitioners suggest in this case.

According to Tosoh, contrary to the petitioners' assertions, no such unusual situation is present in this case. In addition, Tosoh argues that the vast number of cases in which a single U.S. sale forms the basis for an administrative review indicates that there is nothing unusual about the size of the U.S. sale here that would justify a departure from the normal statutory test. Tosoh contends that the petitioners have not cited a single case in which the Department determined that a small volume of U.S. sales warranted rejection of an otherwise viable home market.

In addition, Tosoh argues that there is nothing unusual or extraordinary about the Greek market that does not permit a proper price comparison. Tosoh asserts that the petitioners have not provided any evidence that a particular market situation exists in this case to warrant rejecting its viable home market. Tosoh argues further that the petitioners raise no concerns regarding the difference-in-merchandise adjustment, the home market uses of EMD, or the size and nature of home market sales that establish a particular market situation in this case. For these reasons, Tosoh requests that the Department disregard the petitioners' request that the five-percent home market viability test be abandoned in this administrative review.

Department's Position: We continue to find, as we stated in our preliminary results, that there is no particular

market situation within the meaning of section 773(a)(1)(C)(iii) of the Act which would prevent a proper price comparison nor is there any situation which warrants a departure from the normal statutory five-percent viability test. The petitioners have conflated two separate issues: (1) Whether the normal five-percent threshold is the proper test in this case, and (2) whether there is a particular market situation that justifies rejecting the home market even though it meets the five-percent threshold. Under section 773(a)(1)(C)(ii) of the Act, the five-percent benchmark shall be applied in ''normal'' situations. As noted in the SAA, ''(i)n unusual situations, however, home market sales constituting less than five-percent of sales to the United States could be considered viable and home market sales constituting more than five-percent of sales to the United States could be considered not viable.'' SAA at 821. While we agree with the petitioners' assertion that our five-percent viability test is not conclusive in every case, we find that in this case there is no unusual situation which makes application of our normal statutory five-percent viability test inappropriate. See SAA at 821. Nor have we found any evidence of a particular market situation that would prevent a proper comparison with export price or constructed export price. See section 773(a)(1)(C)(iii) of the Act. As we stated in our April 29 Memorandum, pursuant to section 773(a) of the Act, we will use sales in the home market as the basis for calculating normal value unless one of the conditions in section 773(a)(1)(C) of the Act applies, in which case we may use third-country sales as a basis for normal value. We have not found that any one of the conditions stipulated in section 773(a)(1)(C) of the Act applies in this case.

In addition, we are not persuaded by the petitioners' argument that Tosoh's home market consists of a very small percentage of the total volume and value of Tosoh's sales. The petitioners' argument relies on the old statutory viability test, comparing home market to third-country sales, despite the fact that Congress eliminated this language from the new statute. Under the new statute, for viability purposes, the relevant comparison is between home market and U.S. sales. Because Congress removed the old test, it would make no sense to allow the petitioners to revive it merely by using the language of ''particular market situation.'' Such a reading would be inconsistent with the express language of the SAA and the statute. See SAA at 821 and section 773(a)(1)(C) of the Act.

Furthermore, as we stated in our April 29 Memorandum, unlike our findings in *Salmon from Chile,* the record in this case does not demonstrate that the EMD which Tosoh sold in its home market has severe defects or is of poor quality. In addition, in *Salmon from Chile,* the Department found that the home market producers sold the salmon directly from the factory on an ''as available'' basis; in other words, there was not a regular market for the ''off-quality'' salmon in Chile. See *Salmon From Chile,* 63 FR 31418 (June 9, 1998). That situation simply does not exist in this case, where both zinc-chloride-grade and alkaline-grade EMD are sold through similar channels of distribution and are used exclusively in dry-cell batteries. Moreover, Tosoh guarantees the quality of its products, regardless of EMD grade, and EMD grades meet the general specifications customers require. Therefore, we continue to find no evidence to suggest that the home market sales are incidental to Tosoh.

Regarding the petitioners' assertion that we are unable to rely on our difference-in-merchandise adjustment because of differences between the products, see our response to comment 1. With respect to the petitioners' assertion that the home market product has an unusual use, see our response to comment 2.

In conclusion, based on the reasons set forth above, we find that the market for EMD in Greece is viable within the meaning of section 773(a)(1)(C)(ii) of the Act. In addition, we find that there is no particular market situation within the meaning of section 773(a)(1)(C)(iii) of the Act which warrants a departure from our normal statutory five-percent viability test.

Comment 6: U.S. Price

The petitioners assert that Tosoh has not provided the amount of a post-sale rebate contemplated by the sales contract with the unaffiliated U.S. purchaser. According to the petitioners, the amount the Department deducted as a price adjustment in its preliminary calculation is not an amount provided by Tosoh and it assumes that no change in the dumping margin will be made in the final results or as a result of any court's review of the final results. Moreover, the petitioners argue that the Department cannot base its determination on such an assumption, which pre-judges the results of the Department's proceedings and the court's review. According to the petitioners, Tosoh's pricing provision is designed to allow a subsequent price change that would not be considered in the calculation of the dumping margin and therefore is designed to subvert the antidumping law. The petitioners contend that the Department must find that the U.S. price in the review period is indeterminate and that it therefore must use facts available to determine the dumping margin. The petitioners suggest that the Department use the margin it established in the underlying antidumping investigation as facts available for this review.

Tosoh argues that the petitioners' assertion that the U.S. sales price is ''indeterminate'' and that the Department should therefore use facts available to determine the dumping margin is erroneous. Tosoh contends that it has submitted all the information necessary for the Department to calculate the U.S. sales price. Tosoh argues further that the petitioners have distorted the clear meaning of the express terms of the U.S. sale in this case. According to Tosoh, under those terms, the U.S. customer retains the right to a refund of the antidumping duty deposit up to the amount by which the net U.S. price is determined in this review to exceed normal value but in no event in an amount greater than the deposit itself. According to Tosoh, the contract provision ensures that, after any refund is paid, the transaction will be completed at a non-dumped price.

Tosoh asserts that, in reaching the preliminary results, the Department simply reduced the U.S. sales price by the maximum possible antidumping duty deposit refund amount, treating the reduction as a price adjustment. Thus, according to Tosoh, the U.S. sales price is final and determinate and there is no basis for resorting to facts available as the petitioners suggest.

Department's Position: Using the information Tosoh submitted on July 7, 1998, and on September 14, 1998, we established Tosoh's U.S. price to the unaffiliated U.S. purchaser. In addition, since we also identified the maximum antidumping duty amount Tosoh agreed to refund the U.S. purchaser, we reduced Tosoh's U.S. price by this amount in our calculations to arrive at a U.S. price net of any adjustments. Since we deducted the maximum possible refundable antidumping duty amount stipulated in the contract from the U.S. gross unit price, our calculation reflects the most conservative approach in deriving U.S. price. Therefore, we find that the U.S. price is not an ''indeterminate'' price as the petitioners contend.

In addition, since Tosoh has reported all the necessary information needed to calculate U.S. price accurately and

cooperated fully with our requests for information, we find no reason to apply facts available in this regard.

Comment 8: Sample U.S. Transaction

The petitioners claim that Tosoh did not provide the Department with information regarding the consideration paid with respect to a U.S. sample transaction. According to the petitioners, the record demonstrates that the purchaser made payments to Tosoh or its related trading company in connection with a sample transaction. The petitioners assert that, because Tosoh did not provide information regarding the payments made in connection with this transaction, the Department should use the margin found in the original investigation as facts available to establish the dumping margin on this shipment.

Tosoh argues that, to the best of its knowledge, the merchandise involved in the sample shipment was destroyed in its entirety during testing by the customer and, as reported in Tosoh's July 7, 1998, questionnaire response, the gross unit price for this transaction was zero. Citing *NSK, Ltd.* v. *United States,* 115 F. 3d 965 (Fed. Cir. 1997), Tosoh argues that such a transaction is considered a sample sale under existing law and therefore is not included in the calculation of U.S. price. Tosoh argues further that it has provided the Department with full, accurate, and certified information regarding these transactions, including a description of the transaction process and documentation of the terms of the transaction. Therefore, according to Tosoh, there is no basis for the Department to apply facts available or make any adverse inference in its final results of review with regard to this transaction.

Department's Position: Based on the information Tosoh provided in its responses, we have determined that no consideration was provided for Tosoh's reported U.S. zero-priced transaction. Although the customer was required to pay the cost of certain services related to the sample transaction in question (the nature of these services is proprietary information), this does not constitute consideration with respect to the subject merchandise itself. In addition, the small quantity involved and the fact that Tosoh's sample transaction was used for testing purposes and destroyed in the process supports Tosoh's claim that this was a sample transaction. Therefore, because Tosoh responded fully to our supplemental questions regarding a zero-priced sample transaction and we find no reason to apply facts available to this shipment, we did not calculate a margin on the U.S. sale which Tosoh designated as a zero-priced sample.

Comment 9: Credit Expense

The petitioners argue that Tosoh did not provide a credit expense calculation using the number of days between date of shipment to the customer and date of payment as directed by the Department in its questionnaire. According to the petitioners, the calculation Tosoh provided takes into account only the number of days from the date of entry into the United States to the date of payment. Therefore, according to the petitioners, the Department should recalculate the reported credit expense, adding to the reported credit days the number of days from shipment from Greece to date of entry.

Tosoh argues that the petitioners' proposed methodology for calculating credit expenses should be rejected because it would count certain imputed expenses that are not associated with commercial activity in the United States (*i.e.,* the expense associated with the time between date of shipment from Greece and the date of entry into the United States) and, therefore, result in an improper calculation.

Department's Position: In this case, the record indicates that the invoice date postdates the date of shipment of the merchandise from Greece to the unaffiliated U.S. customer. Consistent with our decision in *Certain Cold-Rolled and Corrosion-Resistant Carbon Steel Flat Products from Korea; Final Results of Antidumping Duty Administrative Reviews,* 64 FR 12927, 12935, March 16, 1999 (*Steel from Korea*), we have used the date of shipment as the date of sale. Furthermore, we have calculated credit expense based on the time between date of shipment and payment by the unaffiliated U.S. customer (*see Steel from Korea*).

Comment 10: Inventory Carrying Costs

The petitioners argue that, in its preliminary results, the Department accounted for Tosoh's inventory carrying costs in calculating normal value but disregarded those same costs in calculating CEP. According to the petitioners, the result of this disparate treatment is an unbalanced comparison and they request that the Department treat inventory carrying costs the same in both markets for the final results of this review.

Tosoh responds that the petitioners' assertion that the Department should deduct from the U.S. price the inventory carrying costs incurred in Greece is incorrect as a matter of law since the regulations state that only those expenses associated with commercial activities occurring in the United States are deducted from the U.S. price. Tosoh argues that the expenses to which the petitioners refer (*i.e.,* inventory carrying costs incurred in Greece) were not associated with economic activities occurring in the United States and thus the Department determined properly not to deduct such expenses from the U.S. price. Tosoh argues further that all indirect selling expenses associated with home market sales, including inventory carrying costs, were deducted from normal value correctly as part of the CEP offset.

Department's Position: As we stated in our response to comment 9, section 351.402(b) of the regulations directs us to make adjustments to CEP for expenses associated with commercial activities in the United States that relate to the sale to an unaffiliated purchaser, no matter where or when paid. It also states that we will not make an adjustment for any expense that is related solely to the sale to an affiliated importer in the United States. Therefore, since this expense (*i.e.,* inventory carrying costs incurred in Greece) was not associated with commercial activities in the United States, we did not deduct it from U.S. price.

Comment 11: Level of Trade

The petitioners argue that no level-of-trade adjustment is appropriate in this case because the CEP deductions do not remove all the selling functions related to the sale in the U.S. market. The petitioners assert that, because Tosoh did not report selling functions provided by its parent company in Japan, the Department cannot make a level-of-trade adjustment in this case.

Tosoh argues that it reported all appropriate selling expenses. According to Tosoh, its parent company in Japan did not incur any direct selling expenses associated with Tosoh's sale of EMD in the United States during the review period.

Tosoh argues further that any involvement by its parent company in Japan in price discussions would be reported as indirect selling expenses, which the Department would disregard in the margin calculation. For these reasons, according to Tosoh, the Department should disregard the petitioners' assertions regarding level of trade.

Department's Position: We find no indication that Tosoh did not report all the selling expenses it incurred during the review period properly. Any selling functions which Tosoh's parent company in Japan may have provided

were reported as indirect selling expenses incurred in the country of manufacture and not related to commercial activities for sales made in the United States. In addition, we did not make a level-of-trade adjustment in our calculations as the petitioners contend. As we stated in our analysis memorandum for the preliminary results, since Tosoh's CEP sales constitute a different level of trade from its home market level of trade, we could not match Tosoh's CEP sales to the same level of trade in the home market nor could we determine a level-of-trade adjustment based on Tosoh's home market sales of merchandise under review. Furthermore, since we have no other information that provides an appropriate basis for determining a level-of-trade adjustment, we made a CEP offset adjustment to normal value. The CEP offset was the sum of indirect selling expenses incurred on the home market sales up to the amount of indirect selling expenses deducted from the U.S. sale under section 772(a)(1)(D) of the Act. See Analysis Memorandum dated April 29, 1999.

Comment 12: Direct Selling Expenses

The petitioners contend that Tosoh has not reported all the direct selling expenses related to the U.S. sale. According to the petitioners, the Department has not made the necessary inquiries to determine all the direct selling expenses that relate to the sale concerned.

Tosoh argues that the petitioners' speculation that it has not reported all selling activities is without merit. Tosoh contends that it has reported all applicable expenses to the best of its ability. Therefore, according to Tosoh, no further inquiry by the Department is necessary.

Department's Position: We find no indication to suggest that Tosoh did not report all the direct selling expenses it incurred during the review period properly. In addition, the petitioners have not provided any evidence to suggest otherwise. Therefore, we have accepted Tosoh's reported direct selling expenses.

Comment 13: Indirect Selling Expenses

The petitioners argue that the Department should make deductions from U.S. price for expenses incurred by Tosoh's affiliated parties in Japan that are not deductible as direct selling expenses.

Tosoh argues that the petitioners' assertion that the Department should deduct indirect selling expenses from CEP is incorrect. According to Tosoh, the petitioners' suggested methodology would require the deduction of indirect expenses not associated with commercial activity in the United States and, therefore, is impermissible under the Department's practice.

Department's Position: As we stated in our response to comment 9, section 351.402(b) of the regulations directs us to make adjustments for expenses associated with commercial activities in the United States that relate to the sale to an unaffiliated purchaser, no matter where or when paid. It also states that we will not make an adjustment for any expense that is related solely to the sale to an affiliated importer in the United States. Therefore, since this expense (*i.e.,* indirect selling expenses incurred by affiliated parties in Japan) was not associated with commercial activities in the United States, we did not deduct it from U.S. price under section 772(a)(1) of the Act.

Final Results of Review

As a result of our analysis of the comments received, we determine a weighted-average margin of 0.00 percent for Tosoh for the period April 1, 1997, through March 31, 1998. The Department will issue appraisement instructions directly to the Customs Service.

Furthermore, the following deposit requirements shall be effective upon publication of this notice of final results of review for all shipments of EMD from Greece, entered, or withdrawn from warehouse, for consumption on or after the publication date, as provided for by section 751(a)(1) of the Act: (1) The cash-deposit rate for Tosoh will be 0.00 percent; (2) for previously investigated or reviewed companies not listed above, the cash-deposit rate will continue to be the company-specific rate published for the most recent period; (3) if the exporter is not a firm covered in this or any previous reviews or the original less-than-fair value (LTFV) investigation, but the manufacturer is, the cash-deposit rate will be the rate established for the most recent period for the manufacturer of the merchandise; and (4) if neither the exporter nor the manufacturer is a firm covered in this review, the cash-deposit rate will continue to be 36.72 percent, the ''all-others'' rate established in the LTFV investigation (54 FR 15243, April 17, 1989).

The deposit requirements shall remain in effect until publication of the final results of the next administrative review.

This notice serves as a final reminder to importers of their responsibility under 19 CFR 351.402(f) to file a certificate regarding the reimbursement of antidumping duties prior to liquidation of the relevant entries during this review period. Failure to comply with this requirement could result in the Secretary's presumption that reimbursement of antidumping duties occurred and the subsequent assessment of double antidumping duties.

This notice also serves as a reminder to parties subject to administrative protective order (APO) of their responsibility concerning the disposition of proprietary information disclosed under APO in accordance with 19 CFR 351.305. Timely notification of return/destruction of APO materials or conversion to judicial protective order is hereby requested. Failure to comply with the regulations and the terms of an APO is a sanctionable violation.

We are issuing and publishing this determination in accordance with sections 751(a)(1) and 777(i)(1) of the Act.

Dated: November 8, 1999.

Robert S. LaRussa,

Assistant Secretary for Import Administration.

[FR Doc. 99–29905 Filed 11–15–99; 8:45 am]

BILLING CODE 3510–DS–P

DEPARTMENT OF COMMERCE

International Trade Administration

[A–475–059]

Pressure Sensitive Tape From Italy: Final Results of Antidumping Duty Administrative Review

AGENCY: Import Administration, International Trade Administration, Department of Commerce.

ACTION: Notice of Final Results of the Antidumping Duty Administrative Review of Pressure Sensitive Plastic Tape from Italy.

SUMMARY: On July 12, 1999, the Department of Commerce (the Department) published the preliminary results of its administrative review of the antidumping duty order on pressure sensitive plastic tape (PSPT) from Italy. This review covers one manufacturer/exporter, Autoadesivi Magri s.r.l. The period of review (POR) is October 1, 1997 through September 30, 1998. We gave interested parties an opportunity to comment on the preliminary results of review but received no comments. Therefore, these final results of review have not changed from those presented in the preliminary results of review, in which we applied total adverse facts available.

EFFECTIVE DATE: November 16, 1999.

FOR FURTHER INFORMATION CONTACT: Nova J. Daly or Thomas Futtner, AC/CVD Enforcement, Group II, Office Four, Import Administration, International Trade Administration, U.S. Department of Commerce, 14th Street and Constitution Avenue, NW., Washington, DC 20230; telephone (202) 482–0989, and 482–3814, respectively.

SUPPLEMENTARY INFORMATION:

The Applicable Statute

Unless otherwise indicated, all citations to the Tariff Act of 1930, as amended (the Act), are references to the provisions effective January 1, 1995, the effective date of the amendments made to the Act by the Uruguay Round Agreements Act (URAA). In addition, unless otherwise indicated, all citations to the Department of Commerce's regulations refer to the regulations codified at 19 CFR part 351 (1998).

Scope of the Review

Imports covered by the review are shipments of PSPT measuring 1⅜ inches in width and not exceeding 4 millimeters (mils) in thickness. During the POR, the above described PSPT was classified under Harmonized Tariff Schedule (HTS) subheadings 3919.90.20 and 3919.90.50. The HTS subheadings are provided for convenience and for U.S. Customs Service (Customs) purposes. The written description remains dispositive as to the scope of the product coverage.

Background

On July 12, 1999, we published in the **Federal Register** (64 FR 37504) the preliminary results of the review of this order. We gave interested parties an opportunity to comment on our preliminary results. We received no comments. In the preliminary results, we determined the weighted-average dumping margin for the period October 1, 1997 through September 30, 1998, to be 12.66 percent, which is the highest rate determined in any prior segment of the proceeding.

This rate was calculated for the 1977–1980 administrative review of this order. The Department has now completed the administrative review in accordance with section 751 of the Act.

Final Results of Review

Because we received no comments from interested parties, we have determined that no changes to the preliminary results are warranted for purposes of these final results. The weighted-average dumping margin for the period October 1, 1997 through April 30, 1998 is as follows:

Manufacturer/exporter	Weighted-average margin percentage
Autoadesivi Magri s.r.l.	12.66

The Department will issue appraisement instructions directly to the Customs Service. Furthermore, the following deposit requirements will be effective upon publication of these final results for all shipments of the subject merchandise entered, or withdrawn from warehouse, for consumption on or after the publication date as provided by section 751(a)(1) of the Act: (1) The cash-deposit rate for the reviewed company will be the rate listed above; (2) for previously reviewed or investigated companies not listed above, the cash-deposit rate will continue to be the company-specific rate published for the most recent period; (3) if the exporter is not a firm covered in this review, a prior review, or the less-than-fair-value (LTFV) investigation, but the manufacturer is, the cash-deposit rate will be the rate established for the most recent period for the manufacturer of the merchandise; and (4) if neither the exporter nor the manufacturer is a firm covered in this review or in any previous reviews or in the original LTFV investigation, the cash deposit rate will be 12.66 percent, the ''new shipper'' rate established in the final results of the first antidumping duty administrative review conducted by the Department (*See Final Results 1997–80*, 48 FR at 35688).[1] The deposit requirements shall remain in effect until publication of the final results of the next administrative review.

This notice serves as a final reminder to importers of their responsibility under 19 CFR 351.402(f) to file a certificate regarding the reimbursement of antidumping duties prior to liquidation of the relevant entries during this review period. Failure to comply with this requirement could result in the Department's presumption that reimbursement of antidumping duties occurred and the subsequent assessment of double antidumping duties.

This notice also serves as the only reminder to parties subject to administrative protective order (APO) of their responsibility concerning the disposition of proprietary information disclosed under APO in accordance with 19 CFR 351.305(a)(3). Timely notification of return/destruction of APO materials or conversion to judicial protective order is hereby requested. Failure to comply with the regulations and the terms of an APO is a sanctionable violation.

We are issuing and publishing this determination in accordance with sections 751(a)(1) and 777(i)(1) of the act.

Dated: November 3, 1999.

Robert S. LaRussa,

Assistant Secretary, Import Administration.

[FR Doc. 99–29908 Filed 11–15–99; 8:45 am]

BILLING CODE 3510–DS–M

[1] This rate will constitute the ''all others'' rate for this review. In proceedings governed by antidumping findings, unless we are able to ascertain the ''all others'' rate from the Treasury LTFV investigation, the Department has determined that it is appropriate to adopt the ''new shipper'' rate established in the first final results of administrative review published by the Department (or that rate as amended for correction of clerical errors as a result of litigation) as the ''all others'' rate for the purposes of establishing cash deposits in all current and future administrative reviews, (*See, e.g., Final results of antidumping Duty Administrative Review of Certain Internal-Combustion Industrial Forklift Trucks From Japan*, 59 FR 1374, 1384, (January 10, 1994)).

DEPARTMENT OF DEFENSE

Department of the Army

Release of the Notice of Availability on the Draft Environmental Impact Statement (DEIS) on the Disposal and Reuse of Oakland Army Base, Oakland, California

AGENCY: Department of the Army, DoD.

ACTION: Notice of availability.

SUMMARY: This DEIS was prepared by the Army in compliance with the National Environmental Policy Act (NEPA) of 1969 and the President's Council on Environmental Quality. The closure of Oakland Army Base (OARB), Oakland, California, was mandated in accordance with the recommendations of the Defense Base Closure and Realignment Act of 1990, Public Law 101–510, as amended (the ''BRAC law'').

DATES: The comment period for the DEIS will end 45 days after publication of the NOA in the **Federal Register** by the U.S. Environmental Protection Agency (EPA).

ADDRESSES: Questions and/or written comments regarding the DEIS, or a request for a copy of the document may be directed to: Dr. Robert Koenigs, U.S. Army Corps of Engineers, U.S. Army Engineer District, Sacramento, 1325 'J' Street, Sacramento, CA 95814.

FOR FURTHER INFORMATION CONTACT: Dr. Robert Koenigs at (916) 557–6712 or by facsimile at (916) 557–6856.

SUPPLEMENTARY INFORMATION: The DEIS analyzes three alternative courses of action with respect to the disposal and

subsequent reuse of the 422 acres (368 land acres and 54 submerged land acres) comprising OARB: (1) The no action alternative, under which the property would be maintained in a caretaker status after closure; (2) the unencumbered alternative, under which the Army would transfer the property without encumbrances, such as environmental restrictions and easements; and (3) the encumbered disposal alternative, under which the Army would transfer the property with various environmental restrictions and easements, limiting the future use of the property. Additionally, this DEIS analyzes the potential environmental and socioeconomic consequences of six community reuse alternatives: (1) Low intensity reuse alternative; (2) low-medium intensity reuse alternative; (3) medium intensity reuse alternative; (4) medium-high intensity reuse alternative; (5) high intensity reuse alternative; and (6) very high intensity reuse alternative.

The DEIS concludes the no action alternative is not reasonable since the closure of OARB is mandated by BRAC law, and the Army has no requirement to retain the property. The DEIS also concludes that the unencumbered disposal alternative is not feasible given environmental conditions and legal requirements.

The Army's preferred alternative course of action is the encumbered disposal of excess property. Possible encumbrances include: covenants and restrictions pertaining to asbestos-containing material; lead-based paint; flood plains; future remedial activities after transfer; wetlands and easements; and rights-of-way.

Community reuse of OARB property is analyzed in the DEIS as a secondary action resulting from closure and disposal by the Army. While the Army does not control the community's reuse of the property, under NEPA, the army is required to analyze the reasonably foreseeable impacts of its disposal action. The local community has established the Oakland Base Reuse Authority (OBRA) to develop and implement a reuse plan for the installation. Approval and implementation of the reuse plan are within the discretion of the OBRA.

A public meeting will be held during the 45-day DEIS comment period to afford the public the opportunity to provide oral and written comments on the DEIS. The location and time of the meeting will be announced in local newspapers at least 15 days prior to the meeting. Verbal comments made at the public meeting and written comments received during the comment period will be used in the preparation of the Final EIS and Record of Decision.

Copies of the DEIS have been forwarded to the EPA, other Federal, state, and local agencies; public officials; and organizations and individuals who previously provided substantive comments in the EIS scoping process. Copies of the DEIS are available for review at the following libraries: The Oakland Library-Main Branch, 125 14th Street, Oakland, CA 94612; and the Oakland Library-West Branch, 1801 Adeline Street, Oakland, CA 94607.

Dated: November 9, 1999.

Raymond J. Fatz,

Deputy Assistant Secretary of the Army (Environment, Safety and Occupational Health) ASA(I&E).

[FR Doc. 99–29794 Filed 11–15–99; 8:45 am]

BILLING CODE 3710–08–M

DEPARTMENT OF EDUCATION

Notice of Proposed Information Collection Requests

AGENCY: Department of Education.

SUMMARY: The Team Leader, Information Management Group, Office of the Chief Information Officer, invites comments on the proposed information collection requests as required by the Paperwork Reduction Act of 1995.

DATES: Interested persons are invited to submit comments on or before January 18, 2000.

SUPPLEMENTARY INFORMATION: Section 3506 of the Paperwork Reduction Act of 1995 (44 U.S.C. Chapter 35) requires that the Office of Management and Budget (OMB) provide interested Federal agencies and the public an early opportunity to comment on information collection requests. OMB may amend or waive the requirement for public consultation to the extent that public participation in the approval process would defeat the purpose of the information collection, violate State or Federal law, or substantially interfere with any agency's ability to perform its statutory obligations. The Team Leader, Information Management Group, Office of the Chief Information Officer, publishes that notice containing proposed information collection requests prior to submission of these requests to OMB. Each proposed information collection, grouped by office, contains the following: (1) Type of review requested, e.g. new, revision, extension, existing or reinstatement; (2) Title; (3) Summary of the collection; (4) Description of the need for, and proposed use of, the information; (5) Respondents and frequency of collection; and (6) Reporting and/or Recordkeeping burden. OMB invites public comment.

The Department of Education is especially interested in public comment addressing the following issues: (1) is this collection necessary to the proper functions of the Department; (2) will this information be processed and used in a timely manner; (3) is the estimate of burden accurate; (4) how might the Department enhance the quality, utility, and clarity of the information to be collected; and (5) how might the Department minimize the burden of this collection on the respondents, including through the use of information technology.

Dated: November 9, 1999.

William E. Burrow,

Team Leader, Information Management Group, Office of the Chief Information Officer.

Office of Management

Type of Review: Reinstatement.

Title: Grant Performance Report.

Frequency: Annually.

Affected Public: Businesses or other for-profit, not-for-profit institutions, State, local or Tribal Gov't, SEAs or LEAs.

Reporting and Recordkeeping Hour Burden:

Responses: 6,000

Burden Hours: 120,000

Abstract: ED uses the information collection specific to ED Form 524–B for the award and administration of multi-year discretionary grants. The Department has substantially increased the flexibility of the grant process by enabling all years of multi-budgets to be negotiated at the time of the initial award (ED GAPS001) and to submit only performance report (ED Form 524–B) to receive continuation funding. This clearance also includes government-wide common rules for institutions of higher education, non-profit agencies, and state and local governments.

Written comments and requests for copies of the proposed information collection request should be addressed to Vivian Reese, Department of Education, 400 Maryland Avenue, SW, Room 5624, Regional Office Building 3, Washington, D.C. 20202–4651, or should be electronically mailed to the internet address OCIO__IMG__Issues@ed.gov, or should be faxed to 202–708–9346.

For questions regarding burden and/or the collection activity requirements, contact Jackie Montague at (202) 708–5359. Individuals who use a telecommunications device for the deaf (TDD) may call the Federal Information

Relay Service (FIRS) at 1–800–877–8339.

[FR Doc. 99–29810 Filed 11–15–99; 8:45 am]

BILLING CODE 4000–01–P

DEPARTMENT OF EDUCATION

Submission for OMB Review; Comment Request

AGENCY: Department of Education.

SUMMARY: The Team Leader, Information Management Group, Office of the Chief Information Officer invites comments on the submission for OMB review as required by the Paperwork Reduction Act of 1995.

DATES: Interested persons are invited to submit comments on or before December 16, 1999.

ADDRESSES: Written comments should be addressed to the Office of Information and Regulatory Affairs, Attention: Danny Werfel, Desk Officer, Department of Education, Office of Management and Budget, 725 17th Street, N.W., Room 10235, New Executive Office Building, Washington, D.C. 20503 or should be electronically mailed to the internet address DWERFEL@OMB.EOP.GOV.

SUPPLEMENTARY INFORMATION: Section 3506 of the Paperwork Reduction Act of 1995 (44 U.S.C. Chapter 35) requires that the Office of Management and Budget (OMB) provide interested Federal agencies and the public an early opportunity to comment on information collection requests. OMB may amend or waive the requirement for public consultation to the extent that public participation in the approval process would defeat the purpose of the information collection, violate State or Federal law, or substantially interfere with any agency's ability to perform its statutory obligations. The Team Leader, Information Management Group, Office of the Chief Information Officer, publishes that notice containing proposed information collection requests prior to submission of these requests to OMB. Each proposed information collection, grouped by office, contains the following: (1) Type of review requested, e.g. new, revision, extension, existing or reinstatement; (2) Title; (3) Summary of the collection; (4) Description of the need for, and proposed use of, the information; (5) Respondents and frequency of collection; and (6) Reporting and/or Recordkeeping burden. OMB invites public comment.

Dated: November 9, 1999.

William E. Burrow,

Team Leader, Information Management Group, Office of the Chief Information Officer.

Office of Vocational and Adult Education

Type of Review: Reinstatement.

Title: Adult Education Annual Performance and Financial Reports.

Frequency: Annually.

Affected Public: State, local or Tribal Gov't, SEAs or LEAs.

Reporting and Recordkeeping Hour Burden:

Responses: 59

Burden Hours: 6,490

Abstract: The information contained in the Annual Performance Reports for Adult Education is needed to monitor the performance of the activities and services funded under the Adult Education and Family Literacy Act of 1998. Report to Congress on the Levels of Performance Achieved on the core indicators of performance, provide necessary outcome information to meet OVAE's GPRA goals for adult education, and provide documentation for incentive awards under Title V of the Workforce Investment Act. The respondents include eligible agencies in 59 states and insular areas.

Written comments and requests for copies of the proposed information collection request should be addressed to Vivian Reese, Department of Education, 400 Maryland Avenue, S.W., Room 5624, Regional Office Building 3, Washington, D.C. 20202–4651, or should be electronically mailed to the internet address OCIO__IMG__Issues@ed.gov, or should be faxed to 202–708–9346.

For questions regarding burden and/or the collection activity requirements, contact Sheila Carey at (202) 708–6287. Individuals who use a telecommunications device for the deaf (TDD) may call the Federal Information Relay Service (FIRS) at 1–800–877–8339.

[FR Doc. 99–29809 Filed 11–15–99; 8:45 am]

BILLING CODE 4000–01–P

DEPARTMENT OF ENERGY

Notice Inviting Financial Assistance Applications

AGENCY: U.S. Department of Energy (DOE), Federal Energy Technology Center (FETC).

ACTION: Notice inviting financial assistance applications.

SUMMARY: The Department of Energy announces that it intends to conduct a competitive Program Solicitation (DE–PS26–00FT40759) and award financial assistance (cooperative agreements) for the program entitled ''Development of Technologies and Capabilities for Fossil Energy R&D Program.'' The Department of Energy (DOE) Federal Energy Technology Center (FETC), on behalf of FETC and the National Petroleum Technology Office (NTPO), seeks cost-shared research and development applications on fossil technologies needed to ensure the availability of affordable energy for the future. This solicitation seeks applications for energy-related research and development that promotes the efficient and sound production and use of fossil fuels (coal, natural gas, and oil).

FETC and NPTO expect to support applications in the following thirteen (13) separate (i.e., stand alone) Areas of Interest:

(1) Gasification Technologies,
(2) Transportation Fuels and Chemicals,
(3) Combustion Systems,
(4) Environmental Innovations for Existing Plants,
(5) Advanced Fuels Research and Speciality Markets,
(6) Advanced Research,
(7) Advanced Turbines and Engines,
(8) Fuel Cells,
(9) Natural Gas Supply and Infrastructure,
(10) Gas-to-Liquids (Natural Gas Processing),
(11) Oil Technology—Emerging Process Technology,
(12) Oil Technology—Critical Upstream Technology Development and Improvements,
(13) Oil and Gas Upstream and Downstream Effective Environmental Protection.

Awards will be made to a limited number of applicants under each area of interest based on the promise of the proposed technology, the quality of prior supporting scientific and engineering studies, the technical approach to reduce the proposed technology to practice, the appropriateness of the project plan, the technical and management capabilities of the applicant organization(s), and availability of DOE funding.

FOR FURTHER SOLICITATION CONTACT: Keith R. Miles, U.S. Department of Energy, Federal Energy Technology Center, Acquisition and Assistance Division, P.O. Box 10940, MS 921–143, Pittsburgh, PA 15236–0940, Telephone: (412) 386–5984, FAX: (412) 386–6137, E-mail: miles@fetc.doe.gov.

SUPPLEMENTARY INFORMATION:

Solicitation Number: DE–PS26–00FT40759.

Awards: DOE anticipates issuing financial assistance (cooperative agreements) for each project selected. DOE reserves the right to support or not support, with or without discussions, any or all applications received in whole or in part, and to determine how many awards will be made. Approximately $13-$27 million of DOE funding is planned for this solicitation, which cover all of the thirteen (13) areas of interest. A minimum 20% cost sharing by the applicant is required for all Areas, however a 50% cost sharing is required for the Field Demonstration activities (covered in Area 12). Details of the cost sharing requirement, and the specific funding levels are contained in the solicitation.

Solicitation Release Date: This Program Solicitation (available in both WordPerfect 6.1 and Portable Document Format (PDF)) is expected to be ready for release on or about November 10, 1999 and will available from FETC's World Wide Web Server Internet System at (http:/www.fetc.doe.gov/business/solicit). Related information on the Fossil Energy areas of interest can be found in the ''Technologies Site'' on the FETC Internet website (www.fetc.doe.gov) and in the ''Program Area'' on the NPTO Internet website (www.npto.doe.gov).

Dated: Nobember 4, 1999.

Keith R. Miles,

Contracting Officer, Acquisition and Assistance Division.

[FR Doc. 99–29859 Filed 11–15–99; 8:45 am]

BILLING CODE 6450–01–P

DEPARTMENT OF ENERGY

Idaho Operations Office; Notice of Availability of Solicitation for Awards of Financial Assistance

AGENCY: Idaho Operations Office, DOE.

ACTION: Notice of Availability of Solicitation Number DE–PS07–00ID13862—Metal Casting Industries of the Future.

SUMMARY: The U.S. Department of Energy (DOE), Idaho Operations Office (ID) is seeking applications for cost shared research and development of technologies which will enhance economic competitiveness, reduce energy consumption and reduce environmental impacts of the metal casting industry. The research is to address research priorities identified by the metal casting industry in the Metal Casting Industry Technology Roadmap.

DATES: The deadline for optional pre-applications is November 19, 1999, at 3:00 p.m. MST.

The deadline for receipt of full applications is February 25, 2000, at 3:00 p.m. MST.

ADDRESSES: Applications should be submitted to: Beth Dahl, Contract Specialist, Procurement Services Division, U.S. Department of Energy, Idaho Operations Office, 850 Energy Drive, Mail Stop 1221, Idaho Falls, Idaho 83401–1563.

FOR FURTHER INFORMATION CONTACT: Beth Dahl, Contract Specialist at dahlee@id.doe.gov, or Linda Hallum, Contracting Officer at *hallumla@id.doe.gov*.

SUPPLEMENTARY INFORMATION: The Metal Casting Industry Technology Roadmap can be found at *http://www.oit.doe.gov/metalcast/roadmap.shtml.* Approximately $1,500,000 to $2,000,000 of funding will be available to fund the first year of selected research efforts. DOE anticipates making 5 to 10 cooperative agreement awards each with a duration of three years or less. A minimum 50% non-federal cost share is required for research and development projects over the life of the project. First year cost share can be as low as 40% if subsequent years have sufficient cost share so that non-federal share totals at least 50%. Collaborations between industry, university, and National Laboratory participants are encouraged. The issuance date of Solicitation Number DE–PS07–00ID13862 is on or about November 9, 1999. The solicitation is available in its full text via the Internet at the following address: *http://www.id.doe.gov/doeid/PSD/proc-div.html.* The statutory authority for the program is the Federal Non-Nuclear Energy Research and Development Act of 1974 (P.L. 93–577). The Catalog of Federal Domestic Assistance (CFDA) Number for this program is 81.086.

Issued in Idaho Falls on November 8, 1999.

R.J. Hoyles,

Director, Procurement Services Division.

[FR Doc. 99–29861 Filed 11–15–99; 8:45 am]

BILLING CODE 6450–01–P

DEPARTMENT OF ENERGY

Oakland Operations Office

Financial Assistance Solicitation No. DE–PS03–00SF22016, Nuclear Energy Research Initiative

AGENCY: Office of Nuclear Energy, Science and Technology (NE), Oakland Operations Office, DOE.

ACTION: Notice of solicitation inviting grant and cooperative agreement applications.

SUMMARY: The Office of Nuclear Energy, Science and Technology, U.S. Department of Energy (DOE), is interested in receiving applications for financial assistance through the award of grants and cooperative agreements, as appropriate, for innovative scientific and engineering research and development in the field of nuclear energy as part of the Nuclear Energy Research Initiative (NERI). NERI is designed to support innovative research, primarily to address the principal technical and scientific obstacles to future use of nuclear power in the U.S. NERI is also intended to reinvigorate the vital nuclear scientific and engineering infrastructure within U.S. universities, industry and DOE national laboratories.

The NERI program was initiated in Government Fiscal Year 1999, with awards for 46 projects, variously of 1 to 3 years duration. This Solicitation applies to the ''second round'' of the program, calling for new awards in Fiscal Year 2000.

This Solicitation applies to applications from universities or other institutions of higher learning, industry, non-profit and R&D organizations, and collaborations among organizations, including those in which DOE national laboratories are participating, but not as the lead organization. A separate Program Announcement is being issued simultaneously for applications in which a DOE national laboratory is the sole or lead performing organization, and is available on the NERI web page.

DATES: Potential applicants are requested to submit a Notice of Intent to Apply (Attachment A). Refer to the paragraph on the Designation of Field(s) of Proposed Work and the listing in Attachment B of this solicitation to identify the contemplated field of R&D to be specified in Attachment A. The Notice should be faxed to Denise Berry, Department of Energy at (510) 637–2025 by December 8, 1999. Submittal of this Notice is not obligatory. However, the Notice will greatly facilitate the application review process and selection of reviewers.

The deadline for receipt of formal applications is February 17, 2000.

ADDRESSES: All formal applications referencing Solicitation No. DE–PS03–00SF22016, should be sent to Denise Berry, U.S. Department of Energy, 1301 Clay Street, 700N, Oakland, California 94612–5208, Attn: Solicitation No. DE–PS03–00SF22016. An original and seven copies of the formal application shall be submitted by United States Postal Service including Express Mail or commercial mail delivery service, or should be hand carried by the applicant

to the address indicated. Formal applications will not be accepted by fax, or electronic mail.

FOR FURTHER INFORMATION CONTACT: Denise Berry, Contract Specialist, U.S. Department of Energy, 1301 Clay Street, 700N, Oakland, California 94612–5208 Phone: (510) 637–1873, Fax: (510) 637–2025.

SUPPLEMENTARY INFORMATION:

Eligibility

This solicitation invites applications from all segments of the U.S. private sector (non-federal). U.S. universities or other institutions of higher learning, industry, non-profit and R&D organizations are eligible for grant or cooperative agreement awards under this program. DOE national laboratories are eligible to participate, but not as the lead organization in the application. A separate Program Announcement is being issued for proposals in which a DOE national laboratory is the sole or lead performing organization. Non-citizens employed by U.S. institutions also are eligible.

Awards

It is anticipated that grants and cooperative agreements, as applicable, will be awarded in Fiscal Year 2000 for projects of one to three years duration. One year funding of each successive year of the projects is expected, subject to the availability of funds. Up to a total of $3 million of Government Fiscal Year 2000 Federal funds are available for awards under this Solicitation and the complementary Program Announcement (to DOE national laboratories).

Typical funding of individual awards is expected to be in the range of $100,000 to $400,000 per year. Collaborative research projects involving two or more organizations may receive larger awards, if merited. The period of performance for individual projects is expected to be up to 3 years.

DOE reserves the right to fund, in whole or in part, any, all, or none of the applications submitted in response to this solicitation.

Background

In January 1997, the President requested his Committee of Advisors on Science and Technology (PCAST) to review the current national energy research and development (R&D) portfolio, and provide a strategy to insure the U.S. has a program to address the Nation's energy and environmental needs for the next century.

In its November 1997 report responding to this request, the PCAST Energy Research and Development Panel determined that assuring a viable nuclear energy option to help meet our future energy needs is important; and recommended that a properly focused R&D effort should be implemented by the Department of Energy to address the principal obstacles to achieving this option, including issues involving nuclear waste, proliferation, economics, and safety.

In response to these recommendations, the Department of Energy initiated the Nuclear Energy Research Initiative (NERI). To assist in developing the work scope topics, a work shop was convened in Washington, DC on April 23 and 24, 1998, attended by over 120 cognizant researchers, scientists and engineers. Projects were selected for award, using an objective merit-peer review process, based on individual or collaborative applications from universities, DOE national laboratories, industry, R&D organizations, and non-profit organizations. Solicitations for the first round of the NERI program were issued on October 23, 1998, and all applications were received by January 29, 1999. Selections for negotiation of awards were announced on May 11, 1999. Grants and cooperative agreements, as applicable, were awarded from June 25 to September 9, 1999. A total of 46 projects were awarded. Abstracts of the selected projects are shown on our NERI web page: *http://neri.ne.doe.gov.* Respondents are encouraged to refer to these abstracts to avoid duplication in the preparation of new applications under this solicitation, which initiates the second round of the NERI program.

Objectives

The NERI program is intended to conduct R&D to meet the following objectives:

- Address and help overcome the principal technical and scientific obstacles to expanded future use of nuclear energy in the U.S., including the issues involving resistance to proliferation, unfavorable economics and nuclear waste disposition;
- Advance the state of nuclear technology to maintain a competitive position in overseas markets and a future domestic market;
- Promote and maintain a nuclear science and engineering infrastructure to meet future technical challenges, and
- Improve the performance, efficiency, reliability, economics, and other attributes to enhance nuclear energy applications.

Scope of Work

The Department of Energy is seeking applications for new and innovative research that is expected to contribute significantly to meeting the NERI objectives in the technical areas specified in the following work elements. Because of the limited funds available for new awards, prospective applicants should exercise judgement in submitting only the most promising and important proposals that directly support the specified work elements. In formulating prospective projects, the current state of development in the areas to be investigated should be recognized, such as by citing references, to avoid repeating work already accomplished. In particular, work underway in on-going NERI projects should not be duplicated. Abstracts for current NERI projects may be found on the NERI web page: http://neri.ne.doe.gov

Generation IV Nuclear Power Systems [1]

This program element includes the investigation and preliminary development of Generation IV reactor and power conversion system concepts that offer the prospect of improved performance and operation, design simplification, enhanced safety or reduced overall cost. Proposed projects may involve innovative reactor, systems or components designs, alternative power conversion cycles, advanced instrumentation and control, and other important design features and characteristics.

Applications for projects involving advanced reactors under this program element should address, among other items, the characteristics, principal attributes, feasibility, safety features, proliferation resistance, economic competitiveness, and additional research that may be required. These designs may be compact or modular designs suitable for transport to remote locations. Desirable features might include long-lived reactor cores that minimize, or avoid altogether, the need for refueling.

Competitive nuclear plant costs are necessary to restore nuclear power as a viable option to help meet our future electrical power demands. Therefore, this program element also will include projects intended to identify and evaluate alternative methods and technologies to reduce the costs of constructing future nuclear power

[1] Generation IV refers to the next generation of nuclear power systems, beyond the Advanced Light Water Reactors, which would be designed to address the long-term challenges to the expanded use of nuclear energy.

plants. As an example, the use of modularization and/or prefabrication already has been demonstrated to shorten the construction schedule. As another example, increased automation and use of robots in the manufacture of equipment and in plant construction has the potential of significantly reducing costs, and in addition, making domestic manufacture of equipment more competitive.

Improved Proliferation Resistance of Reactor Systems and Fuel Cycles

This program element concerns the investigation, and where applicable, preliminary development to establish feasibility and attributes of reactor systems, fuel systems, and/or alternative fuel cycles devised to improve the proliferation resistance of civilian nuclear power. Possible technology opportunities and subjects of investigation include alternative or modified reactor and fuel cycle concepts, material protection and control; and techniques that minimize generation of plutonium and waste by-products, restrict physical access to fuel materials while in the reactor, or increase the burnup of plutonium and other actinides in the fuel. The Department is particularly interested in proposals which include significant international collaboration.

Fundamental Science

This element includes research and development in fundamental science. The proposed research may be in the field of material science, chemical science, computational science, nuclear physics, or other applicable basic research fields. Candidate subjects of research may include the investigation of nuclear isomers that could prove beneficial in civilian applications.

The Department of Energy will particularly favor fundamental science proposals that directly support one or more of the preceding program elements. Proposals should identify the specific application and the expected benefits from successful completion of the work.

Designation of Field(s) of Proposed Work

To facilitate selection of reviewers for the objective merit-peer review process, the Notices of Intent to Apply (Attachment A) and the applications should identify the nuclear engineering or fundamental science fields that most closely apply to the proposed research work. As shown in Attachment B, the fields that are pertinent to this Scope of Work include:

Nuclear engineering fields—

—Reactors, reactor systems, components, structures, and reactor and power conversion cycles/concepts
—Instrumentation and control
—Reactor fuel systems to Improve proliferation resistance
Fundamental science
—Materials science
—Fundamental chemistry
—Computational and engineering science
—Nuclear physics

The requested identification of applicable fields of work is not intended to constrain or otherwise influence the proposed work in any way. These designations are used to obtain the appropriate peer reviewer qualifications for the individual applications.

Collaborative Applications

Collaboration between engineering and science researchers is encouraged. U.S. universities, DOE national laboratories, private industry and R&D and non-profit organizations are encouraged to submit collaborative applications. Collaborative applications should identify a lead organization, and the work scope responsibilities and cost for each participating organization. The lead organization should submit a single application, which integrates the portion of the overall project work scope assigned to each participant.

Private sector or academic applicants who wish to form a collaborative project with a DOE National Laboratory or other Federally Funded Research and Development Center (FFRDC) may not include the FFRDC in their application as a lower-tier participant (subcontractor). Rather, each FFRDC collaborator should prepare a portion of the proposal. The applicant should combine each portion into a single, integrated technical proposal. The private sector or academic organization must include a Face Page and Budget Pages for their portion of the project. The FFRDC must include separate Budget Pages for its portion of the project. A face page should be provided for the complete package, showing the total cost and individual collaborator costs for each year of the project. All costs should be specified for each year on an elapsed time basis, and not a fiscal year basis. The joint proposal should be submitted to DOE as one package. If approved for funding, DOE will award Grants or Cooperative Agreements, as appropriate, to the private sector or academic lead organizations. The lead organizations will subcontract directly with the other non-federal collaborators. DOE will directly fund the FFRDC's.

If the lead applicant collaborates with a DOE National Laboratory, the applicant must provide a written statement that to the best of the lead applicant's knowledge, the effort performed by the National Laboratory will not place the laboratory in direct competition with the domestic private sector.

Where a DOE national laboratory is the lead organization, the application should be prepared in response to Program Announcement LAB NE–2000–1.

Collaboration with international organizations is encouraged provided the collaboration is mutually beneficial and the lead organization is a U.S. based organization, and all DOE and other domestic funding is used for work performed in the U.S. Such collaborative arrangements are subject to approval by DOE and must comply with any Federal restrictions on foreign participation, and with any current DOE memoranda of understanding or other general agreements between DOE and the participating foreign entity.

Format and Information To Be Included in the Application

Applicants are expected to use the following format. Applications must be written in English with all budgets in U.S. dollars, specified for each year of the project on an elapsed time and not a fiscal year basis. The applications should clearly present the objectives, work scope including tasks to be performed, key milestones for each year, schedule, costs, and the importance/significance of the proposed project. Where collaborative efforts are proposed, the individual responsibilities of participating organizations should be identified. As a minimum, the following information should be included:

—Standard face page (DOE Form 424)
—Table of Contents
—Project Abstract and identification of the field of R&D of the proposed project (see Attachment B) (1 +page)
—Project Description—narrative description of proposed project, including objective(s), background, R&D plan, preliminary studies, and the importance of proposed project; also include itemized work plan showing individual tasks and responsible organizations (no more than 20 pages; multi-investigator collaborative projects may use up to 40 pages)
—Project schedule and milestones, including key milestones at the end of each budget year (12 month elapsed time, and not fiscal year basis)

—Collaborative R&D (if applicable)—description of the collaborative arrangements defining responsibilities and tasks assigned to each participating organization (up to 2 pages).
—Organization & Qualifications—identification of the project organization, and qualifications and responsibilities of the participating organizations. Biographical sketches of project manager/principal investigator and other key project personnel (no more than 2 pages each).
—Facilities & Resources—information on the experience of the applicant organization and the adequacy of required facilities and resources (no more than 3 pages).
—Budget for each participating organization for each year and for total project period (using DOE F.4620.1); total budget for each year and total project period; all annual budgets should be based on 12 months elapsed time and not on a fiscal year basis.
—Additional information the applicant deems relevant may be included, subject to the page limitation.
—Written statement that to the best of the lead applicant's knowledge, the effort performed by a collaborating DOE National Laboratory will not place the laboratory in direct competition with the domestic private sector.

In addition to providing an original and seven copies of each application, applicants are required to also provide a 3.5-inch write protected diskette containing the application in electronic format. The label on the diskette must clearly identify the institution, principal investigator, title of application, and the computer system and program used to prepare the document. Unsuccessful applications will not be returned to the applicant.

Application Evaluation

All valid applications will be evaluated in accordance with the requirements of 10 CFR 600.13:

—DOE will perform an initial review for conformance with the technical and administrative requirements stated in this solicitation, for funding availability, and for relevance to NERI program objectives.
—For those applications that successfully complete the initial review, an objective merit-peer review will be performed to evaluate technical and/or scientific merit, and cost aspects of the applications, exclusive of NE programmatic and policy factors. The objective merit review will be in accordance with the evaluation criteria stated below. For this purpose, a group comprised of three or more professionally and technically qualified persons will be selected in such a manner as to assure the highest degree of independence and objectivity. Following this review, panels comprising these reviewers will be convened for the peer review. The reviewers may include any mix of federal and non-federal experts, except those persons involved in approving/disapproving the applications. Reviewers must comply with the requirements for avoiding conflict of interest as stated in 10 CFR 600.14.
—Following the objective merit-peer review, programmatic and relevance reviews will be performed by DOE for those applications judged to be of the highest merit. The applications will be evaluated with respect to NE programmatic and policy considerations, including relevance and importance in meeting NERI program objectives, the balance among program elements to be supported, availability of funds, conformance to DOE policy and programmatic objectives, and other pertinent factors.

The following evaluation criteria apply to the objective merit review:

—Technical quality of the application and proposed work:
—Contribution to the state of knowledge in the scientific/technology fields;
—Importance of the proposed work in meeting program objectives;
—Completeness and clarity of the technical application;
—Appropriateness/adequacy of the proposed methodology or approach;
—Extent to which proposed work is new, unique or innovative;
—Reasonableness of the proposed project cost and schedule including allocations among multiple participating organizations where applicable.
—Capabilities and qualifications of principal investigator/project manager and key personnel; adequacy of resources and facilities applied by participating organizations.

Intellectual Property Rights

With respect to intellectual property, the patent and data provisions set forth in 10 CFR 600.27 and 48 CFR 927 shall be used in any financial assistance awards funded under this program. Applicants, in accordance with 10 CFR part 784, have the right to request, in advance or within thirty days after the effective date of an award, a waiver of the U.S. Government's rights in subject inventions. Domestic small business firms and nonprofit organizations normally will receive the patent rights clause at 48 CFR 952.227–11, which generally permits the awardee to retain title to subject inventions. Therefore, small business firms and nonprofit organizations normally need not request a patent waiver.

Any application or preapplication materials which contain proprietary technical or confidential commercial data should be submitted with the Notice contained at 10 CFR 600.15 (b)(1).

As an aid in determining the Government's need to include Alternates II and/or III of the Rights in Data-General clause at 48 CFR 52.227–14, applicants shall state whether any technical data expected to be delivered to the Government under the prospective award will qualify as Limited Rights Data or Restricted Computer Software, as these terms are defined in 48 CFR 52.227–14, and, if so, shall identify such data generally. Any identification of such data in applicant's response is not necessarily determinative of the status of such data should an award be made based upon an applicant's proposal.

Statutory and Regulatory Authority

No funding will be available under the DOE Minority Economic Impact Act (MEI) loan program, 10 CFR Part 800, to finance the cost of preparing a financial assistance application.

Review under E.O. 12372, ''Intergovernmental Review of Federal Programs'' is not required.

The Nuclear Energy Research Initiative will be conducted under the authority of the Energy and Water Development Appropriations Act of 2000, HR 2605, and 106–336; the Catalog of Federal Domestic Assistance (CFDA) number 81.092; and the applicable DOE Financial Assistance Regulations at 10 CFR Part 600. The regulations and guidance documents can be accessed on the DOE Financial Assistance Home Page at: ''http://www.pr.doe.gov/fahome.html''.

Solicitation Questions and Answers

DOE does not intend to hold a preapplication conference. You may submit your written questions via e-mail to denise.berry@oak.doe.gov by November 29, 1999. Responses to questions will be periodically placed on the Oakland Operations Web Site: ''http://www.oak.doe.gov/financial/sol_page.html''.

Information

Information about the development, submittal of applications, eligibility, limitations, the selection process, and other policies and procedures may be found on ''http://www.oak.doe.gov/financial/sol__page.html''.

Certifications

Lobbying Restrictions (Department of Interior and Related Agencies Appropriations Act, 1999)

The contractor or awardee agrees that none of the funds obligated on the award shall be made available for any activity or the publication or distribution of literature that in any way tends to promote public support or opposition to any legislative proposal on which congressional action is not complete. This restriction is in addition to those prescribed elsewhere in statute and regulation.

Notice Regarding the Purchase of American-Made Equipment and Products—Sense of Congress

It is the sense of Congress that, to the greatest extent practicable, all equipment and products purchased with funds made available under this award should be American-made.

Simpson-Craig Amendment

Applicant organizations which are described in section 501(c)(4) of the Internal Revenue Code of 1986 and engage in lobbying activities after December 31, 1995 shall not be eligible for the receipt of Federal funds constituting an award, grant, or loan. Section 501 (c)(4) of the Internal Revenue Code of 1986 covers:

''Civic leagues or organizations not organized for profit but operated exclusively for the promotion of social welfare, or local associations of employees, the membership of which and the net earnings of which are devoted exclusively to charitable, educational, or recreational purposes.''

As set forth in section 3 of the Lobbying Disclosure Act of 1995, as amended, (2 U.S.C. 1602), lobbying activities are defined broadly to include among other things, contacts on behalf of an organization with specified employees of the Executive Branch and Congress with regard to Federal legislative regulatory, and program administrative matters. Applicants qualifying as described in section 501(c)(4) of the Internal Revenue Code of 1986 must fill out representation.

Issued in Oakland, California on November 8, 1999.

Joan Macrusky,

Director, Financial Assistance Center.

Attachment A—Notice of Intent to Apply

FAX: (510) 637–2025
TO: Denise Berry, Contract Specialist

Name of Lead Organization/Principal Investigator

Name of Collaborating Organization(s)

Intend to submit an application under Solicitation No. _____

Title: _____

Scope of Work Element: _____

Engineering or fundamental science field, F–____(from Attachment B)

_____

_____

_____

Attachment B—Applicable Fields of Work

(To designate applicable fields of nuclear engineering and fundamental science to facilitate evaluation of applications)

Nuclear Engineering:

F–1 Reactors, reactor systems, components, structures, and reactor-power conversion cycles/concepts

F–2 Instrumentation and control systems

F–3 Reactor-fuel systems to improve proliferation resistance

F–5–1 Materials science

F–5–2 Fundamental chemistry

F–5–3 Computational and engineering science

F–5–4 Nuclear physics

[FR Doc. 99–29860 Filed 11–15–99; 8:45 am]

BILLING CODE 6450–01–P

DEPARTMENT OF ENERGY

Federal Energy Regulatory Commission

[Docket No. IC00–505–000]

Proposed Information Collection and Request for Comments

November 9, 1999.

AGENCY: Federal Energy Regulatory Commission.

ACTION: Notice of proposed information collection and request for comments.

SUMMARY: In compliance with the requirements of Section 3506(c)(2)(a) of the Paperwork Reduction Act of 1995 (Pub. L. 104–13), the Federal Energy Regulatory Commission (Commission) is soliciting public comment on the specific aspects of the information collection described below.

DATES: Consideration will be given to comments submitted on or before January 18, 2000.

ADDRESSES: Written comments on the proposed collection of information may be submitted to the Federal Energy Regulatory Commission, Attn: Michael Miller, Office of the Chief Information Officer, CI–1, 888 First Street NE, Washington, DC 20426.

FOR FURTHER INFORMATION CONTACT: Michael Miller may be reached by telephone at (202) 208–1415, by fax at (202) 208–2425 and by E-mail at mike.miller@ferc.fed.us.

SUPPLEMENTARY INFORMATION: *Abstract.* The FERC–505, ''Application for License for Water projects 5MW or Less Capacity'' (OMB No. 1902–0115) consists of the filing requirements as defined in 18 CFR Sections 4.61, 4.71, 4.93, 4.107–108, 4.201–.202, 292.203 and 292.208. The information collected under the requirements of FERC–505 is used by the Commission to implement the statutory provisions of part 1 of the Federal Power Act (FPA), 16 U.S.C. Sections 791a *et seq.* and 3301–3432, and Section 408 of the Energy Security Act. (P.L. 96–294, June 30, 1980), as amended by the Electric Consumers Protection Act (ECPA) (P.L. 99–495, 100 Stat. 1243 (1986). The FPA as amended by ECPA provides the Commission with responsibility of issuing licenses for nonfederal hydropower plants, plus requiring the Commission in its licensing activities to give equal consideration to preserving environmental quality. ECPA also amended sections 10(a) and 10(j) of the FPA to specify the conditions on which hydropower licenses are issued, to direct that the project be adopted in accordance with a comprehensive plan that improves waterways for interstate/foreign commerce and for the protection, enhancement and mitigation of damages to fish and wildlife.

Submission of the information is necessary to fulfill the requirements of Sections 9 and 10(a) of the Act in order for the Commission to make the required finding that the proposal is economically, technically, and environmentally sound, and is best adapted to the comprehensive plan of development of the water resources of the region. Under Section 405(c) of the Public Utilities Regulatory Policies Act of 1978, the Commission may in its discretion (by rule or order) grant an exemption in whole or in part from the requirements of Part I of the FPA to small hydropower projects having a proposed installed capacity of 5,000 kilowatts or less. The information collected in the form of a written application for a license and used by Commission staff to determine the broad impact of a hydropower license application.

Action: The Commission is requesting a three-year extension of the current expiration date, with no changes to the existing collection of data.

Burden Statement: Public reporting burden for this collection is estimated as:

Number of respondents (1)	Annual responses per respondent (2)	Average burden hours per response (3)	Total annual burden hours (1)×(2)×(3)
12	1	226	2,712

Estimated cost burden to respondents is $143,278; (*i.e.*, 2,712 hours divided by 2,080 hours per full time employee per year multiplied by $109,889 per year equals $143,278). The cost per respondent is $11,940.

The reporting burden includes the total time, effort, or financial resources expended to generate, maintain, retain, or disclose or provide the information including: (1) Reviewing instructions; (2) developing, acquiring, installing, and utilizing technology and systems for the purposes of collecting, validating, verifying, processing, maintaining, disclosing and providing information; (3) adjusting the existing ways to comply with any previously applicable instructions and requirements; (4) training personnel to respond to a collection of information; (5) searching data sources; (6) completing and reviewing the collection of information; and (7) transmitting, or otherwise disclosing the information.

The estimate of cost for respondents is based upon salaries for professional and clerical support, as well as direct and indirect overhead costs. Direct costs include all costs directly attributable to providing this information, such as administrative costs and the cost for information technology. Indirect or overhead costs are costs incurred by an organization in support of its mission. These costs apply to activities which benefit the whole organization rather than any one particular function or activity.

Comments are invited on: (1) Whether the proposed collection of information is necessary for the proper performance of the functions of the Commission, including whether the information will have practical utility; (2) the accuracy of the agency's estimate of the burden of the proposed collection of information, including the validity of the methodology and assumptions used; (3) ways to enhance the quality, utility and clarity of the information to be collected; and (4) ways to minimize the burden of the collection of information on those who are to respond, including the use of appropriate automated, electronic, mechanical, or other technological collection techniques or other forms of information technology, *e.g.*, permitting electronic submission of responses.

Linwood A. Watson, Jr.,

Acting Secretary.

[FR Doc. 99–29800 Filed 11–15–99; 8:45 am]

BILLING CODE 6717–01–M

DEPARTMENT OF ENERGY

Federal Energy Regulatory Commission

[Docket No. IC00–500–000]

Proposed Information Collection and Request for Comments

November 9, 1999.

AGENCY: Federal Energy Regulatory Commission.

ACTION: Notice of proposed information collection and request for comments.

SUMMARY: In compliance with the requirements of Section 3506(c)(2)(a) of the Paperwork Reduction Act of 1995 (Pub. L. No. 104–13), the Federal Energy Regulatory Commission (Commission) is soliciting public comment on the specific aspects of the information collection described below.

DATES: Consideration will be given to comments submitted on or before January 18, 2000.

ADDRESSES: Written comments on the proposed collection of information may be submitted to the Federal Energy Regulatory Commission, Attn: Michael Miller, Office of the Chief Information Officer, CIN–1, 888 First Street NE, Washington, DC 20426.

FOR FURTHER INFORMATION CONTACT: Michael Miller may be reached by telephone at (202) 208–1415, by fax at (202) 208–2425 and by E-mail at mike.miller@ferc.fed.us.

SUPPLEMENTARY INFORMATION: *Abstract:* The FERC–500, ''Application for License for Water Projects with More than 5 MW Capacity'' (OMB) No. 1902–0058 consists of the filing requirements as defined in 18 CFR Sections 4.32, 4.38, 4.40–41, 4.50–51, 4.61, 4.71, 4.93, 4.107–108, 4.201–.202, 16.1, 16.10, 16.20, 292.203 and 292.208. The information collected under the requirements of FERC–500 is used by the Commission to determine the broad impact of a hydropower license application. In deciding whether to issue a license, the Commission gives equal consideration to full range of licensing purposes related to the potential value of a stream of river. Among these purposes are: hydroelectric development; energy conservation; fish and wildlife resources; including their spawning grounds and habitat; visual resources; cultural resources; recreational opportunities; other aspects of environmental quality; irrigation; flood control and water supply.

Submission of the information is necessary to fulfill the requirements of the Federal Power Act in order for the Commission to make the required finding that the proposal is economically sound, is best adopted to a comprehensive plan for improving/developing a waterway or waterways. Under Part I of the Federal Power Act (FPA), (16 U.S.C. Sections 791a (*et seq*,), the Commission has the authority to issue licenses for hydroelectric projects on the waters over which Congress has jurisdiction. The Electric Consumers Protection Act (P.L. 99–495, 100 Stat. 1243) provides the Commission with the responsibility of issuing licenses for nonfederal hydroelectric plants. ECPA also amended the language of the FPA concerning environmental issues to ensure environmental quality.

Action: The Commission is requesting a three-year extension of the current expiration date, with no charge to the existing collection of data.

Burden Statement: Public reporting burden for this collection is estimated as:

Number of respondents	Anual responses per respondent	Average burden hours per response	Total annual burden hours
(1)	(2)	(3)	(1)×(2)×(3)
9	1	899	8,091

Estimated cost burden to respondents is $427,458 (*i.e.*, 8,091 hours divided by 2,080 hours per full time employee per year multipiled by $109,889 per year equals $427,458). The cost per respondent is $47,495.

The reporting burden includes the total time, effort, or financial resources expended to generate, maintain, retain, or disclose or provide the information including: (1) Reviewing instructions; (2) developing, acquiring, installing, and utilizing technology and systems for the purposes of collecting, validating, verifying, processing, maintaining, disclosing and providing information; (3) adjusting the existing ways to comply with any previously applicable instructions and requirements; (4) training personnel to respond to a collection of information; (5) searching data sources; (6) completing and reviewing the collection of information; and (7) transmitting, or otherwise disclosing the information.

The estimate of cost for respondents is based upon salaries for professional and clerical support, as well as direct and indirect overhead costs. Direct costs include all costs directly attributable to providing this information, such as administrative costs and the cost for information technology. Indirect or overhead costs are costs incurred by an organization in support of its mission. These cost apply to activities which benefit the whole organization rather than any one particular function or activity.

Comments are invited on: (1) Whether the proposed collection of information is necessary for the proper performance of the functions of the Commission, including whether the information will have practical utility; (2) the accuracy of the agency's estimate of the burden of the proposed collection of information, including the validity of the methodology and assumptions used; (3) ways to enhance the quality, utility and clarity of the information to be collected; and (4) ways to minimize the burden of the collection of information on those who are to respond, including the use of appropriate automated, electronic mechanical, or other technological collection techniques or other forms of information technology *e.g.*, permitting electronic submission of responses.

Linwood A. Watson, Jr.,

Acting Secretary.

[FR Doc. 99–29801 Filed 11–15–99; 8:45 am]

BILLING CODE 6717–01–M

DEPARTMENT OF ENERGY

Federal Energy Regulatory Commission

[Docket No. RP00–61–000]

El Paso Natural Gas Company; Notice of Tariff Filing

November 9, 1999.

Take notice that on November 4, 1999, El Paso Natural Gas Company (El Paso) tendered for filing as part of its FERC Gas Tariff, the following tariff sheets, with an effective date of January 1, 2000.

El Paso states that the tariff sheets are being made in compliance with the Commission's order issued September 29, 1999 at Docket No. RP99–323–000.

Second Revised Volume No. 1–A

Sixteenth Revised Sheet No. 20
Tenth Revised Sheet No. 22
Sixteenth Revised Sheet No. 23
Twentieth Revised Sheet No. 24
Sixteenth Revised Sheet No. 26
Sixteenth Revised Sheet No. 27
Thirteenth Revised Sheet No. 28
Third Revised Sheet No. 37
Third Revised Sheet No. 38
Sixth Revised Sheet No. 256
Sixth Revised Sheet No. 257

Third Revised Volume No. 2

Forty-fifth Revised Sheet No. 1–D.2
Thirty-Ninth Revised Sheet No. 1–D.3

El Paso states that the tariff sheets are being filed to revise the Gas Research Institute surcharges and to update the identification of low and high load factor shippers.

Any person desiring to be heard or to protest said filing should file a motion to intervene or a protest with the Federal Energy Regulatory Commission, 888 First Street, N.E., Washington, D.C. 20426, in accordance with Sections 385.214 or 385.211 of the Commission's Rules and Regulations. All such motions or protests must be filed in accordance with Section 154.210 of the Commission's Regulations. Protests will be considered by the Commission in determining the appropriate action to be taken, but will not serve to make protestants parties to the proceedings. Any person wishing to become a party must file a motion to intervene. Copies of this filing are on file with the Commission and are available for public inspection in the Public Reference Room. This filing may be viewed on the web at http://www.ferc.fed.us/online/rims.htm (call 202–208–2222 for assistance).

David P. Boergers,

Secretary.

[FR Doc. 99–29808 Filed 11–15–99; 8:45 am]

BILLING CODE 6717–01–M

DEPARTMENT OF ENERGY

Federal Energy Regulatory Commission

[Docket No. RP98–18–003]

Iroquois Gas Transmission System, L.P.; Notice of Proposed Changes in FERC Gas Tariff

November 9, 1999

Take notice that on November 4, 1999, Iroquois Gas Transmission System, L.P. tendered for filing as part of its FERC Gas Tariff, First Revised Volume No., 1, First Revised Sheet No. 6 and Original Sheet Nos. 7 and 8. Iroquois requests that the Commission approve the tariff sheets effective November 4, 1999.

Iroquois states that the revised tariff sheets reflect a negotiated rate between Iroquois and Duke Energy Trading and Marketing, LLC for transportation under Rate Schedule RTS beginning on November 4, 1999 through March 31, 2000.

Iroquois states that copies of its filing were served on all jurisdictional customers and interested state regulatory agencies and all parties to the proceeding.

Any person desiring to protest this filing should file a protest with the Federal Energy Regulatory Commission, 888 First Street, N.E., Washington, D.C. 20426, in accordance with Section 385.211 of the Commission's Rules and Regulations. All such protests must be filed as provided in Section 154.210 of the Commission's Regulations. Protests will be considered by the Commission in determining the appropriate action to

be taken, but will not serve to make protestants parties to the proceedings. Copies of this filing are on file with the Commission and are available for public inspection in the Public Reference Room. This filing may be viewed on the web at http://www.ferc.fed.us/online/rims.htm (call 202–208–2222 for assistance).

David P. Boergers,

Secretary.

[FR Doc. 99–29806 Filed 11–15–99; 8:45 am]

BILLING CODE 6717–01–M

DEPARTMENT OF ENERGY

Federal Energy Regulatory Commission

[Docket No. RP00–60–000]

Mojave Pipeline Company, Notice of Tariff Filing

November 9, 1999.

Take notice that on November 4, 1999, Mojave Pipeline Company (Mojave) tendered for filing to become part of its FERC Gas Tariff, Second Revised Volume No. 1, the following tariff sheet, with an effective date of January 1, 2000:

Third Revised Sheet No. 11

Mojave states that the tariff sheet is being filed in compliance with the Commission's order issued September 29, 1999 at Docket No. RP99–323–000. Mojave states that the tariff sheet revise the Gas Research Institute surcharges.

Any person desiring to be heard or to protest said filing should file a motion to intervene or a protest with the Federal Energy Regulatory Commission, 888 First Street, N.E., Washington, D.C. 20426, in accordance with Sections 385.214 or 385.211 of the Commission's Rules and Regulations. All such motions or protests must be filed in accordance with Section 154.210 of the Commission's Regulations. Protests will be considered by the Commission in determining the appropriate action to be taken, but will not serve to make protestants parties to the proceedings. Any person wishing to become a party must file a motion to intervene. Copies of this filing are on file with the Commission and are available for public inspection in the Public Reference Room. This filing may be viewed on the web at http://www.ferc.fed.us/online/rims.htm (call 202–208–2222 for assistance).

David P. Boergers,

Secretary.

[FR Doc. 99–29807 Filed 11–15–99; 8:45 am]

BILLING CODE 6717–01–M

DEPARTMENT OF ENERGY

Federal Energy Regulatory Commission

[Docket No. CP00–20–000]

Northern Natural Gas Co., Notice of Application

November 9, 1999.

Take notice that on November 2, 1999, Northern Natural Gas Company (Northern), P.O. Box 3330, Omaha, Nebraska 68103–0330, filed in Docket No. CP00–20–000 an application pursuant to Section 7(b) of the Natural Gas Act (NGA) for permission and approval to abandon an individually certificated transportation agreement between Northern and Reliant Energy Minnegasco (REM) under its Rate Schedule T–8 contained in its FERC Gas Tariff, Original Volume No. 2, all as more fully set forth in the application which is on file with the Commission and open to public inspection. The application may be viewed on the web at www.ferc.fed.us/online/rims.htm. Call (202) 208–2222 for assistance.

Northern states that the agreement provided for Northern to transport up to 50,000 Mcf of natural gas per day on a seasonal basis, at the direction of REM, from its Waterville Storage located in Steele County, Minnesota on behalf of REM. According to Northern, both parties have agreed to mutually terminate the underlying contract. Additionally, Northern asserts the REM has executed a firm transportation agreement to provide equivalent capacity to meet its market demand pursuant to its FERC Gas Tariff and in compliance with Part 284 of the Commission's regulations. No facilities will be abandoned as a result of the requested abandonment of service. Northern contends that it will file the approximately revised tariff sheets upon approval of the Commission of the requested abandonment.

Any questions regarding this application should be directed to Don Vignaroli, Regulatory Analyst, P.O. Box 3330, Omaha, Nebraska 68103–0330 at (402) 398–7139, or Keith Peterson, Director, Certificates and Reporting, P.O. Box 3330, Omaha, Nebraska 68103–0330 at (402) 398–7421.

Any person desiring to be heard or to make any protest with reference to said application should on or before November 30, 1999, file with the Federal Energy Regulatory Commission (888 First Street, NE., Washington, DC 20426) a motion to intervene or a protest in accordance with the requirements of the Commission's Rules of Practice and Procedure (18 CFR 385.211) and the Regulations under the Natural Gas Act (18 CFR 157.10). All protests filed with the Commission will be considered by it in determining the appropriate action to be taken but will not serve to make the protestants parties to the proceeding. Any person wishing to become a party to a proceeding or to participate as a party in any hearing therein must file a motion to intervene in accordance with the Commission's Rules.

Take further notice that, pursuant to the authority contained in and subject to the jurisdiction conferred upon the Federal Energy Regulatory Commission by Sections 7 and 15 of the Natural Gas and the Commission's Rules of Practice and Procedure, a hearing will be held without further notice before the Commission or its designee on this application if no motion to intervene is filed within the time required herein, if the Commission on its on review of the matter finds that permission and approval for the proposed abandonment are required by the public convenience and necessity. If a motion for leave to intervene is timely filed, or if the Commission on its own motion believes that a former hearing is required, further notice of such hearing will be duly given.

Under the procedure herein provided for, unless otherwise advised, it will be unnecessary for Northern to appear or be represented at the hearing.

Linwood A. Watson, Jr.,

Acting Secretary.

[FR Doc. 99–29802 Filed 11–15–99; 8:45 am]

BILLING CODE 6717–01–M

DEPARTMENT OF ENERGY

Federal Energy Regulatory Commission

[Project No. 137–002]

Pacific Gas & Electric Company; Notice of Meeting

November 9, 1999.

Take notice there will be meetings of the Ecological Resources and Recreation subgroups of the Mokelumne Relicensing Collaborative on Tuesday, November 16, through Thursday, November 18, 1999, from 9:00 a.m. to 4:00 p.m. at the PG&E offices, 2740 Gateway Oaks Drive, in Sacramento, California. Expected participants need to give their names to David Moller (PG&E) at (415) 973–4696 so they can get through security.

For further information, please contact Diana Shannon at (202) 208–7774.

David P. Boergers,

Secretary.

[FR Doc. 99–29805 Filed 11–15–99; 8:45 am]

BILLING CODE 6717–01–M

DEPARTMENT OF ENERGY

Federal Energy Regulatory Commission

[Docket No. EL00–13–000]

Seminole Electric Cooperative, Inc., and Florida Municipal Power Agency, Complainants, v. Florida Power & Light Company, Respondent; Notice of Filing

November 9, 1999.

Take notice that on November 5, 1999, Seminole Electric Cooperative, Inc. (Seminole) and Florida Municipal Power Agency (FMPA) tendered for filing a joint complaint with the Commission regarding Florida Power & Light Company's (FPL) failure to correctly administer wholesale formula rates that FPL uses in its Open Access Transmission Tariff and various other agreements under which Seminole and FMP have taken or are currently taking service from FPL.

Any person desiring to be heard or to protest this filing should file a motion to intervene or protest with the Federal Energy Regulatory Commission, 888 First Street, NE, Washington, DC 20426, in accordance with Rules 211 and 214 of the Commission's Rules of Practice and Procedure (18 CFR 385.211 and 385.214). All such motions or protests must be filed on or before December 6, 1999. Protests will be considered by the Commission in determining the appropriate action to be taken, but will not sever to make protestants parties to the proceeding. Any person wishing to become a party must file a motion to intervene. Copies of this filing are on file with the Commission and are available for public inspection in the Public Reference Room. This filing may also be viewed on the Internet at http://www.ferc.fed.us/online/rims.htm (call 202–208–2222) for assistance. Answers to the complaint shall also be due on or before December 6, 1999.

Linwood A. Watson, Jr.,

Acting Secretary.

[FR Doc. 99–29803 Filed 11–15–99; 8:45 am]

BILLING CODE 6717–01–M

DEPARTMENT OF ENERGY

Federal Energy Regulatory Commission

[Docket No. GT100–2–000]

U–T Offshore System, L.L.C.; Notice of Tariff Filing

November 9, 1999.

Take notice that on November 5, 1999 U–T Offshore System, L.L.C. (U–TOS), (formerly U–T Offshore System) in conjunction with its request to redesignate the certificate of public convenience and necessary of U–T Offshore System to reflect the new name of the pipeline—U–T Offshore System, L.L.C. and the conversion of the pipeline from a partnership to a limited liability company—filed a complete copy of its proposed FERC Gas Tariff, Fourth Revised Volume No. 1 (Original Sheet Nos. 1 thru 160).

U–T Offshore System, L.L.C. states that the proposed tariff is the current U–T Offshore System tariff, revised only to reflect the conversion of the pipeline from a partnership to a limited liability company.

Any person desiring to be heard or to protest said filing a motion to intervene or a protest with the Federal Energy Regulatory Commission, 888 First Street, N.E., Washington, DC 20426, in accordance with Sections 385.214 or 385.211 of the Commission's Rules and Regulations. All such motions or protests must be filed in accordance with Section 154.210 of the Commission's Regulations. Protests will be considered by the Commission in determining the appropriation action to be taken, but will not serve to make protestants parties to the proceedings. Any person wishing to become a party must file a motion to intervene. Copies of this filing are on file with the Commission and are available for public inspection in the Public Reference Room. This filing may be viewed on the web at http://www.ferc.fed.us/online/rims.htm (call 202–208–2222 for assistance).

David P. Boergers,

Secretary.

[FR Doc. 99–29804 Filed 11–15–99; 8:45 am]

BILLING CODE 6717–01–M

DEPARTMENT OF ENERGY

Federal Energy Regulatory Commission

[Docket No. EC99–73–001, et al.]

Tennessee Gas Pipeline Company, et al.; Electric Rate and Corporate Regulation Filings

November 9, 1999.

Take notice that the following filings have been made with the Commission:

1. Tennessee Gas Pipeline Company

[Docket No. EC99–73–001]

Take notice that on October 29, 1999, Tennessee Gas Pipeline Company (Tennessee), P.O. Box 2511, Houston, Texas 77252, tendered for acceptance a compliance filing in the above-captioned docket.

Tennessee states that it is making this filing in compliance with the Commission's September 29, 1999 ''Order Approving Disposition of Jurisdictional Facilities'' in Docket No. EC99–73. El Paso Energy Corporation and Sonat Inc., 88 FERC 61,302 (1999) (hereinafter, the September 29th Order). In the September 29th Order, the Commission approved the application of El Paso Energy Corporation and Sonat Inc. requesting Commission approval of the proposed merger between the two companies. Tennessee further states that in their application, the respective companies committed to file tariff sheets, for each of their jurisdictional pipeline companies that serve the Southeast, committing that future pipeline expansion capacity will be offered to all shippers on a non-discriminatory basis. Upon further review of its Tariff, Tennessee notes that its currently effective tariff provisions already provide that expansions of its system will be offered on a non-discriminatory basis. Specifically, Article XVII (Construction of Receipt and Delivery Facilities) of the General Terms and Conditions of Tennessee's Tariff sets forth Tennessee's generally applicable policy for the construction, modification and rearrangement of facilities and that Tennessee will handle all requests for construction of facilities ''in a manner which is not unduly discriminatory.''

Comment date: November 29, 1999, in accordance with Standard Paragraph E at the end of this notice.

2. Jones Black River Services, Inc.

[Docket No. EG00–13–000]

Take notice that on October 29, 1999, as amended on November 5, 1999, Jones Black River Services, Inc. (Applicant)

filed with the Federal Energy Regulatory Commission an Application for Determination of Exempt Wholesale Generator Status pursuant to Part 365 of the Commission's Regulations and Section 32 of the Public Utility Holding Company Act of 1935, as amended.

Applicant is a wholly-owned special purpose subsidiary of Jones Capital Corporation, a Delaware corporation. Following the purchase by an unrelated third party of the Fort Drum Cogeneration Project (the Facility) from its current owner, Black River Limited Partnership (BRLP), Applicant will lease the Facility from the third party purchaser and will be the sole operator of the Facility. Applicant will also sell at wholesale the electric energy that the Facility generates. BRLP will transfer to JBRSI all operating rights, permits, easements and a ground lease.

The Facility, a topping-cycle cogeneration project located at the Fort Drum Army Base in Fort Drum, New York, is currently a Commission-certified qualifying cogeneration facility. The Facility consists of three multi-fuel (coal, petroleum coke, wood chip) fired circulating fluidized bed boilers, and an extraction/condensing turbine generator of approximately 50 MW net capacity. The Facility also will include three diesel engine generators, rated at one MW each, and associated transmission components interconnecting the project with the grid. The Facility's total net electrical capacity will be approximately 53 MW. Due to termination of the thermal energy contract by the U.S. Army, the Facility will cease to be a QF after December 31, 1999.

Applicant requests that the Commission issue its determination of EWG status to the Applicant as expeditiously as possible so that Applicant is able to engage in permitted transactions as an EWG on Jan. 1, 2000.

Copies of the application have been served upon the New York Public Service Commission, and the Securities and Exchange Commission.

Comment date: November 30, 1999, in accordance with Standard Paragraph E at the end of this notice. The Commission will limit its consideration of comments to those that concern the adequacy or accuracy of the application.

3. Progress Power Marketing, Inc

[Docket No. ER96–1618–015]

Take notice that on October 22, 1999, Progress Power Marketing, Inc. filed their quarterly report for the quarter ending September 30, 1999, for information only.

4. California Power Exchange Corporation

[Docket No. ER99–2229–002]

Take notice that on October 18, 1999, California Power Exchange Corporation (CalPX) submitted a compliance filing in response to the Commission's September 17, 1999 order in this proceeding. The compliance filing addresses the allocation of costs between CalPX and its division known as CalPX Trading Services (CTS).

Comment date: November 19, 1999, in accordance with Standard Paragraph E at the end of this notice.

5. New England Power Company, Massachusetts Electric Company, The Narragansett Electric Company, New England Electric Transmission Corporation, New England Hydro-Transmission Corporation, New England Hydro-Transmission, Electric Company, Inc., AllEnergy Marketing Company, L.L.C., Montaup Electric Company, Blackstone Valley Electric Company, Eastern Edison Company, Newport Electric Corporation and Research Drive LLC, New England Power Company, Montaup Electric Company

[Docket No. ER99–2832–002]

Take notice that on October 29, 1999, in compliance with the Commission's September 29, 1999 order in the above-referenced proceeding authorizing the merger New England Electric System and Eastern Utilities Associates (New England Power Company, et al., 88 FERC ¶ 61,292 (1999)), New England Power Company and its affiliates (Massachusetts Electric Company, Narragansett Electric Company, New England Electric Transmission Corporation, New England Hydro-Transmission Corporation, New England Hydro-Transmission Electric Company, Inc., AllEnergy Marketing Company, L.L.C., and Research Drive LLC), and Montaup Electric Company and its affiliates holding jurisdictional assets (Blackstone Valley Electric Company, Eastern Edison Company, Newport Electric Corporation) submitted for filing their proposed rate mechanism to maintain the status quo in the New England Power Pool.

Comment date: November 18, 1999, in accordance with Standard Paragraph E at the end of this notice.

6. Sunbury Generation, LLC

[Docket No. ER99–3420–002]

Take notice that on October 29, 1999, Sunbury Generation, LLC (Sunbury) filed a notification with the Commission that service will commence under the Transition Power Purchase Agreement between Sunbury and PP&L, Inc. (TPPA) on November 1, 1999, the date of the closing for Sunbury's purchase of the Sunbury generating facilities. The Commission's order accepting the TPPA required Sunbury to file this notification when service will commence. Illinova Power Marketing, Inc., et al., 88 FERC ¶ 61,189 (1999).

Comment date: November 18, 1999, in accordance with Standard Paragraph E at the end of this notice.

7. Commonwealth Edison Company, Commonwealth Edison Company of Indiana

[Docket No. ER99–3886–001]

Take notice that on October 29, 1999, Commonwealth Edison Company and Commonwealth Edison Company of Indiana filed tariff sheet changes in compliance with the Commission's order of September 29, 1999 in this proceeding.

Comment date: November 18, 1999, in accordance with Standard Paragraph E at the end of this notice.

8. Central Illinois Light Company

[Docket No. ER00–341–000]

Take notice that on October 29, 1999, Central Illinois Light Company (CILCO), 300 Liberty Street, Peoria, Illinois 61202, tendered for filing with the Commission a substitute Index of Customers under its Coordination Sales Tariff and two service agreements with two new customers, Illinova Power Marketing, Inc. and TXU Energy Trading Company a name change for one customer from Strategic Energy Ltd. to Strategic Energy L.L.C.

CILCO requested an effective date of October 4, 1999 for the new service agreements.

Copies of the filing were served on the affected customers and the Illinois Commerce Commission.

Comment date: November 18, 1999, in accordance with Standard Paragraph E at the end of this notice.

9. American Electric Power Service, Corporation on behalf of: Appalachian Power Company, Columbus Southern Power Company, Indiana Michigan Power Company, Kentucky Power Company, Kingsport Power Company, Ohio Power Company, Wheeling Power Company, Consumers Energy Company, Detroit Edison Company, FirstEnergy Corporation on behalf of: The Cleveland Electric, Illuminating Company, Ohio Edison Company, Pennsylvania Power Company, The Toledo Edison Company, Virginia Electric and Power Company

[Docket No. ES99–62–000]

Take notice that on June 3, 1999, American Electric Power Service Corporation on behalf of the public utility operating company subsidiaries of the AEP system (Appalachian Power Company, Columbus Southern Power Company, Indiana Michigan Power Company, Kentucky Power Company, Kingsport Power Company, Ohio Power Company, and Wheeling Power Company), Consumers Energy Company, Detroit Edison Company, FirstEnergy Corp. on behalf of the transmission-owning FirstEnergy Operating Companies (The Cleveland Electric Illuminating Company, Ohio Edison Company, Pennsylvania Power Company, and The Toledo Edison Company), and Virginia Electric and Power Company (collectively, the Alliance Companies) filed an application for authorization under Section 204 of the Federal Power Act for Alliance Publico to issue securities in the form of an initial public offering.

All comments filed should be limited to the subject of the requested authorization of the securities.

Comment date: November 26, 1999, in accordance with Standard Paragraph E at the end of this notice.

10. Ogden Martin Systems of Union, Inc.

[Docket No. ER00–446–000]

Take notice that on November 1, 1999, Ogden Martin Systems of Union, Inc., tendered for filing a rate schedule to engage in sales at market-based rates.

Comment date: November 19, 1999, in accordance with Standard Paragraph E at the end of this notice.

11. ARCO CQC Kiln, Inc.

[Docket No. ER00–443–000]

Take notice that on November 1, 1999, ARCO CQC Kiln, Inc., (Applicant) a Delaware Corporation which owns and operates an electric generating facility at its industrial facility known as a calciner (which converts petroleum coke to anode-grade coke) in Wilmington, California, has applied before the Commission for an order accepting its proposed FERC Electric Rate Schedule No. 1, under which it proposes to make sales of electric capacity and energy to wholesale customers at market-based rates, as well as sales of certain ancillary services at market-based rates.

Applicant further requests that the Commission: (1) Accept the rate schedule for filing, (2) grant waivers of certain of the Commission's Regulations, and (3) grant blanket authorizations of certain other actions under the Commission's Regulations.

Comment date: November 19, 1999, in accordance with Standard Paragraph E at the end of this notice.

12. New York State Electric & Gas Corporation

[Docket No. ER00–442–000]

Take notice that on November 1, 1999, New York State Electric & Gas Corporation (NYSEG), tendered for filing pursuant to Section 205 of the Federal Power Act and Section 35.13 of the Federal Energy Regulatory Commission's (FERC or Commission) Regulations, an amendment to Rate Schedule 194 filed with FERC corresponding to an Agreement with the Steuben Rural Electric Cooperative (the Cooperative). The proposed amendment would increase revenues by $1,218.50 based on the twelve month period ending December 31, 2000.

This rate filing is made pursuant to Article IV, Section B of the February 26, 1999 Facilities Agreement between NYSEG and the Cooperative, filed with FERC. The annual charges for routine operation and maintenance and general expenses, as well as revenue and property taxes are revised based on data taken from NYSEG's Annual Report to the Federal Energy Regulatory Commission (FERC Form 1) for the twelve month ended December 31, 1998. The revised facilities charge is levied on the cost of the tap of NYSEG's South Addison to Presho 34.5 kV transmission line. Such tap of NYSEG's transmission line connects to the Cooperative's Sullivan Road Substation and is for the sole use of the Cooperative.

NYSEG requests an effective date of January 1, 2000.

Copies of the filing were served upon the Steuben Rural Electric Cooperative , Inc. and the Public Service Commission of the State of New York.

Comment date: November 19, 1999, in accordance with Standard Paragraph E at the end of this notice.

13. New York State Electric & Gas Corporation

[Docket No. ER00–441–000]

Take notice that on November 1, 1999, New York State Electric & Gas Corporation (NYSEG), tendered for filing pursuant to Section 205 of the Federal Power Act and Section 35.13 of the Federal Energy Regulatory Commission's (FERC or Commission) Regulations, an amendment to Rate Schedule 117 filed with FERC corresponding to an Agreement with the Delaware County Electric Cooperative (the Cooperative). The proposed amendment would increase revenues by $505.59 based on the twelve month period ending December 31, 2000.

This rate filing is made pursuant to Section 1 (c) and Section 3 (a) through (c) of Article IV of the June 1, 1977 Facilities Agreement between NYSEG and the Cooperative, filed with FERC. The annual charges for routine operation and maintenance and general expenses, as well as revenue and property taxes are revised based on data taken from NYSEG's Annual Report to the Federal Energy Regulatory Commission (FERC Form 1) for the twelve month ended December 31, 1998. The revised facilities charge is levied on the cost of the 34.5 kV tie line from Taylor Road to the Jefferson Substation, constructed by NYSEG for the sole use of the Cooperative.

NYSEG requests an effective date of January 1, 2000.

Copies of the filing were served upon the Delaware County Electric Cooperative , Inc. and the Public Service Commission of the State of New York.

Comment date: November 19, 1999, in accordance with Standard Paragraph E at the end of this notice.

14. New York State Electric & Gas Corporation

[Docket No. ER00–440–000]

Take notice that on November 1, 1999, New York State Electric & Gas Corporation (NYSEG), tendered for filing pursuant to Section 205 of the Federal Power Act and Section 35.13 of the Federal Energy Regulatory Commission's (FERC or Commission) Regulations, an amendment to Rate Schedule 72 filed with FERC corresponding to an Agreement with the Municipal Board of the Village of Bath (the Village). The proposed amendment would increase revenues by $681.80 based on the twelve month period ending December 31, 2000.

This rate filing is made pursuant to Section 2 (a) through (c) of Article IV of the December 1, 1977 Facilities Agreement between NYSEG and the

Village, filed with FERC. The annual charges for routine operation and maintenance and general expenses, as well as revenue and property taxes are revised based on data taken from NYSEG's Annual Report to the Federal Energy Regulatory Commission (FERC Form 1) for the twelve month period ending December 31, 1998. The revised facilities charge is levied on the cost of the tap facility constructed and owned by NYSEG to connect its 34.5 kV transmission line located in the Village to the Village's Fairview Drive Substation.

NYSEG requests an effective date of January 1, 2000.

Copies of the filing were served upon the Municipal Board of the Village of Bath and the Public Service Commission of the State of New York.

Comment date: November 19, 1999, in accordance with Standard Paragraph E at the end of this notice.

15. Northern States Power Company (Minnesota) Northern States Power Company (Wisconsin)

[Docket No. ER00–439–000]

Take notice that on October 28, 1999, Northern States Power Company (Minnesota) and Northern States Power Company (Wisconsin) (jointly NSP), tendered for filing a Firm Point-to-Point Transmission Service Agreement between NSP and North Central Power Co., Inc.

NSP requests that the Commission accept the Agreements effective November 1, 1999, and requests waiver of the Commission's notice requirements in order for the agreements to be accepted for filing on the date requested.

Comment date: November 19, 1999, in accordance with Standard Paragraph E at the end of this notice.

16. Duke Energy Oakland LLC

[Docket No. ER00–437–000]

Take notice that on November 1, 1999, Duke Energy Oakland LLC, tendered for filing revised tariff sheets in the above referenced docket to restate schedules to its Must-Run Schedule.

Comment date: November 19, 1999, in accordance with Standard Paragraph E at the end of this notice.

17. Duke Energy Moss Landing LLC

[Docket No. ER00–436–000]

Take notice that on November 1, 1999, Duke Energy Moss Landing LLC, tendered for filing revised tariff sheets in the above referenced docket to restate schedules to its Must-Run Schedule.

Comment date: November 19, 1999, in accordance with Standard Paragraph E at the end of this notice.

18. Duke Energy South Bay LLC

[Docket No. ER00–435–000]

Take notice that on November 1, 1999, Duke Energy South Bay LLC, tendered for filing revised tariff sheets in the above-referenced docket to restate schedules to its Must-Run Schedule.

Comment date: November 19, 1999, in accordance with Standard Paragraph E at the end of this notice.

19. CoEnergy Trading Company

[Docket No. ER00–434–000]

Take notice that on November 1, 1999, CoEnergy Trading Company (Co-Energy), tendered for filing a Notice of Cancellation of CoEnergy's Rate Schedule FERC No. 1, effective as of September 30, 1999.

Comment date: November 19, 1999, in accordance with Standard Paragraph E at the end of this notice.

20. Entergy Services, Inc.

[Docket No. ER00–432–000]

Take notice that on November 1, 1999, Entergy Services, Inc., on behalf of Entergy Arkansas, Inc., Entergy Gulf States, Inc., Entergy Louisiana, Inc., Entergy Mississippi, Inc., and Entergy New Orleans, Inc. (together Entergy), tendered for filing an Amendment to the System Agreement to include the cost of any sulfur dioxide emission allowances used to generate energy exchanged among the Operating Companies.

Entergy has served a copy of this filing on its state and local regulatory commissions.

Entergy requests an effective date of January 1, 2000, for the Amendment, to coincide with the commencement of Phase II of the Title IV (the acid rain control title) of the Clean Air Act Amendments.

Comment date: November 19, 1999, in accordance with Standard Paragraph E at the end of this notice.

21. Illinova Power Marketing, Inc.

[Docket No. ER00–431–000]

Take notice that on November 1, 1999, Illinova Power Marketing, Inc. tendered for filing an Electric Power Transaction Service Agreements under which certain customers will take service pursuant to IPMI's power sales tariff, Rate Schedule FERC No. 1.

IPMI has requested an effective date of October 1, 1999, for each service agreement.

Comment date: November 19, 1999, in accordance with Standard Paragraph E at the end of this notice.

22. Duke Energy Corporation

[Docket No. ER00–426–000]

Take notice that on November 1, 1999, Duke Energy Corporation (Duke), tendered for filing a Service Agreement with TXU Energy Trading Company, for Firm Transmission Service under Duke's Open Access Transmission Tariff.

Duke requests that the proposed Service Agreement be permitted to become effective September 20, 1999 or upon acceptance by the Commission.

Duke states that this filing is in accordance with Part 35 of the Commission's Regulations and a copy has been served on the North Carolina Utilities Commission.

Comment date: November 19, 1999, in accordance with Standard Paragraph E at the end of this notice.

23. Montana Power Company

[Docket No. ER00–425–000]

Take notice that on November 1, 1999, The Montana Power Company (Montana), tendered for filing with the Federal Energy Regulatory Commission pursuant to 18 CFR 35.13 an unexecuted Firm Point-To-Point Transmission Service Agreement and executed Non-Firm Point-to-Point Service Agreement with PacifiCorp Power Marketing, Inc. under Montana's FERC Electric Tariff, Fourth Revised Volume No. 5 (Open Access Transmission Tariff).

A copy of the filing was served upon PacifiCorp Power Marketing, Inc.

Comment date: November 19, 1999, in accordance with Standard Paragraph E at the end of this notice.

24. Northern States Power Company (Minnesota), Northern States Power Company (Wisconsin)

[Docket No. ER00–422–000]

Take notice that on November 1, 1999, Northern States Power Company (Minnesota) and Northern States Power Company (Wisconsin) jointly tendered for filing the existing Exhibit VII and revised Exhibits VIII and IX to the Agreement to Coordinate Planning and Operations and Interchange Power and Energy Between Northern States Power Company (Minnesota) and Northern States Power Company (Wisconsin) (Interchange Agreement). The Interchange Agreement is NSP (Minnesota) FERC Rate Schedule No. 437 and NSP (Wisconsin) FERC Rate Schedule No. 73.

The NSP Companies request an effective date of January 1, 2000, 60-days after filing, without suspension.

Copies of the filing letter and Exhibits VII, VIII and IX have been served upon the State Commissions of Michigan,

Minnesota, North Dakota, South Dakota and Wisconsin.

Comment date: November 19, 1999, in accordance with Standard Paragraph E at the end of this notice.

25. MidAmerican Energy Company

[Docket No. ER00–421–000]

Take notice that on November 1, 1999, MidAmerican Energy Company tendered for filing a proposed change in its Rate Schedule for Power Sales, FERC Electric Rate Schedule, Original Volume No. 5. The proposed change consists of certain reused tariff sheets consistent with the quarterly filing requirement.

MidAmerican states that it is submitting these tariff sheets for the purpose of complying with the requirements set forth in Southern Company Services, Inc., 75 FERC ¶61,130 (1996), relating to quarterly filings by public utilities of summaries of short-term market-based power transactions. The tariff sheets contain summaries of such transactions under the Rate Schedule for Power Sales for the applicable quarter.

MidAmerican proposes an effective date of the first day of the applicable quarter for the rate schedule change. Accordingly, MidAmerican requests a waiver of the 60-day notice requirement for this filing. MidAmerican states that this date is consistent with the requirements of the Southern Company Services, Inc., order and the effective date authorized in Docket No. ER96–2459–000.

Copies of the filing were served upon MidAmerican's customers under the Rate Schedule for Power Sales and the Iowa Utilities Board, the Illinois Commerce Commission and the South Dakota Public Utilities Commission.

Comment date: November 19, 1999, in accordance with Standard Paragraph E at the end of this notice.

26. Pacific Gas and Electric Company

[Docket No. ER00–418–000]

Take notice that on November 1, 1999, Pacific Gas and Electric Company (PG&E) tendered for filing a request for termination of the Power Sale Agreement between Pacific Gas and Electric Company and Sacramento Municipal Utility District (SMUD), dated July 28, 1988, initially accepted by the Commission on December 7, 1988 and designated as PG&E Rate Schedule FERC No. 122. PG&E also tendered for filing a request for termination of the Transmission Rate Schedule, dated November 1, 1988, as accepted by the Commission on June 17, 1991 and designated as PG&E Rate Schedule FERC No. 138.

Copies of this filing have been served upon SMUD and the California Public Utilities Commission.

Comment date: November 19, 1999, in accordance with Standard Paragraph E at the end of this notice.

27. Duke Energy Corporation

[Docket No. ER00–415–000]

Take notice that on November 1, 1999, Duke Energy Corporation (Duke) tendered for filing a Service Agreement with TXU Energy Trading Company for Non-Firm Transmission Service under Duke's Open Access Transmission Tariff.

Duke requests that the proposed Service Agreement be permitted to become effective on September 20, 1999 or upon acceptance by the Commission.

Duke states that this filing is in accordance with Part 35 of the Commission's Regulations and a copy has been served on the North Carolina Utilities Commission.

Comment date: November 19, 1999, in accordance with Standard Paragraph E at the end of this notice.

28. Montana Power Company

[Docket No. ER00–414–000]

Take notice that on November 1, 1999, The Montana Power Company (Montana) tendered for filing with the Federal Energy Regulatory Commission pursuant to 18 CFR 35.13 an unexecuted Network Integration Transmission Service Agreement and Network Operating Agreement with Smurfit-Stone Container Corporation under Montana's FERC Electric Tariff, Fourth Revised Volume No. 5 (Open Access Transmission Tariff).

A copy of the filing was served upon Smurfit-Stone Container Corporation.

Comment date: November 19, 1999, in accordance with Standard Paragraph E at the end of this notice.

29. Northern States Power Company (Minnesota), Northern States Power Company (Wisconsin)

[Docket No. ER00–413–000]

Take notice that on November 1, 1999, Northern States Power Company (Minnesota) and Northern States Power Company (Wisconsin) (jointly NSP) tendered for filing a Firm Point-to-Point Transmission Service Agreement between NSP and Northwestern Wisconsin Electric Company.

NSP requests that the Commission accept the Agreements effective November 1, 1999, and requests waiver of the Commission's notice requirements in order for the agreements to be accepted for filing on the date requested.

Comment date: November 19, 1999, in accordance with Standard Paragraph E at the end of this notice.

30. ISO New England Inc.

[Docket No. ER00–395–000]

Take notice that on November 1, 1999, ISO New England Inc. (ISO) tendered for filing proposed rates under Section 205 of the Federal Power Act for its FERC Tariff for Transmission Dispatch and Power Administration Services (the Tariff).

Pursuant to Section 35.13(a)(1) of the Commission's Regulations, 18 CFR 35.13(a)(1), the ISO seeks approval of the rates set forth in its Tariff and accompanying rate schedules.

The ISO requests that these rates be allowed to go into effect on January 1, 2000.

Copies of the filing were served upon all Participants in the New England Power Pool (NEPOOL) and all non-Participant entities that are customers under the NEPOOL Open Access Transmission Tariff, as well as on the utility regulatory agencies of the six New England States.

Comment date: November 19, 1999, in accordance with Standard Paragraph E at the end of this notice.

Standard Paragraph

E. Any person desiring to be heard or to protest such filing should file a motion to intervene or protest with the Federal Energy Regulatory Commission, 888 First Street, N.E., Washington, D.C. 20426, in accordance with Rules 211 and 214 of the Commission's Rules of Practice and Procedure (18 CFR 385.211 and 385.214). All such motions or protests should be filed on or before the comment date. Protests will be considered by the Commission in determining the appropriate action to be taken, but will not serve to make protestants parties to the proceeding. Any person wishing to become a party must file a motion to intervene. Copies of these filings are on file with the Commission and are available for public inspection. This filing may also be viewed on the Internet at http://www.ferc.fed.us/ online/rims.htm (call 202–208–2222 for assistance).

David P. Boergers,

Secretary.

[FR Doc. 99–29835 Filed 11–15–99; 8:45 am]

BILLING CODE 6717–10–P

ENVIRONMENTAL PROTECTION AGENCY

[FRL–64761–1]

Agency Information Collection Activities: Submission for OMB Review; Comment Request, NSPS—Pressure Sensitive Tape and Label Surface Coating Operations

AGENCY: Environmental Protection Agency (EPA).

ACTION: Notice.

SUMMARY: In compliance with the Paperwork Reduction Act (44 U.S.C. 3501 *et seq.*), this document announces that the following Information Collection Request (ICR) has been forwarded to the Office of Management and Budget (OMB) for review and approval: NSPS Subpart RR—Pressure Sensitive Tape and Label Surface Coating Operations—OMB control number 2060–0004 expiration date, January 31, 2000. The ICR describes the nature of the information collection and its expected burden and cost; where appropriate, it includes the actual data collection instrument.

DATES: Comments must be submitted on or before December 16, 1999.

FOR FURTHER INFORMATION CONTACT: Sandy Farmer at EPA by phone at (202) 260–2740, by E-Mail at Farmer.Sandy@epamail.epa.gov or download a copy of the ICR off the Internet at *http://www.epa.gov/icr* and refer to EPA ICR No. 0658.07.

SUPPLEMENTARY INFORMATION: *Title:* NSPS Subpart RR—Pressure Sensitive Tape and Label Surface Coating Operations (OMB Control No. 2060–0004; EPA ICR No. 0658.07; Expiration January 31, 2000). This review request is for an extension of a currently approved collection.

Abstract: Owners or operators of the affected facilities described must make one-time-only notifications. Owners or operators are also required to maintain records of the occurrence and duration of any startup, shutdown, or malfunction in the operation of an affected facility, or any period during which the monitoring system is inoperative. Monitoring requirements specific to New Source Performance Standards—Subpart RR for Pressure Sensitive Tape and Label Surface Coating Operations provide EPA with information on the operation of the emission control device and compliance with the volatile organic compound (VOC) standard. Quarterly reports of excess emissions are required. These notifications, reports, and records are essential in determining compliance; and are required, in general, of all sources subject to NSPS. Any owner or operator subject to the provisions of this part shall maintain a file of these measurements, and retain the file for at least 2 years following the date of such solvent content and temperature measurements, excess emission reports, and records of coatings and solvents used.

Approximately 410 sources are currently subject to the standard, and it is estimated that an additional 10 sources per year will become subject to the standard in the next three years. All reports are sent to the delegated State or Local authority. In the event that there is no such delegated authority, the reports are sent directly to the EPA Regional Office. The required information consists of emissions data and other information that have been determined not to be private. However, any information submitted to the Agency for which a claim of confidentiality is made will be safeguarded according to the Agency policies set forth in Title 40, Chapter 1, part 2, subpart B—Confidentiality of Business Information (see 40 CFR part 2; 41 FR 36902, September 1, 1976; amended by 43 FR 40000, September 8, 1978; 43 FR 42251, September 20, 1978; 44 FR 17674, March 23, 1979).

An agency may not conduct or sponsor, and a person is not required to respond to, a collection of information unless it displays a currently valid OMB control number. The OMB control numbers for EPA's regulations are listed in 40 CFR part 9 and 48 CFR Chapter 15. The **Federal Register** document required under 5 CFR 1320.8(d), soliciting comments on this collection of information was published on 06/04/1999 (64 FR 30011); no comments were received.

Burden Statement: The annual public reporting and recordkeeping burden for this collection of information is estimated to average 38 hours per response. Burden means the total time, effort, or financial resources expended by persons to generate, maintain, retain, or disclose or provide information to a Federal agency. This includes the time needed to review instructions; develop, acquire, install, and utilize technology and systems for the purposes of collecting, validating, and verifying information, processing and maintaining information, and disclosing and providing information; adjust the existing ways to comply with any previously applicable instructions and requirements; train personnel to be able to respond to a collection of information; search data sources; complete and review the collection of information; and transmit or otherwise disclose the information.

Respondents/Affected Entities: Owners/Operators of Pressure Sensitive Tape and Label Surface Coating Operation Facilities

Estimated Number of Respondents: 410.

Frequency of Response: Initially, quarterly and semi-annually.

Estimated Total Annual Hour Burden: 39,104 hours.

Estimated Total Annualized Capital, O&M Cost Burden: $1,880,000.

Send comments on the Agency's need for this information, the accuracy of the provided burden estimates, and any suggested methods for minimizing respondent burden, including through the use of automated collection techniques to the following addresses. Please refer to EPA ICR No.0658.07 and OMB Control No. 2060–0004 in any correspondence.

Ms. Sandy Farmer, U.S. Environmental Protection Agency, Office of Policy, Regulatory Information Division (2137), 401 M Street, SW, Washington, DC 20460;

and

Office of Information and Regulatory Affairs, Office of Management and Budget, Attention: Desk Officer for EPA, 725 17th Street, NW, Washington, DC 20503.

Dated: November 9, 1999.

Richard T. Westlund,

Acting Director, Regulatory Information Division.

[FR Doc. 99–29889 Filed 11–15–99; 8:45 am]

BILLING CODE 6560–50–P

ENVIRONMENTAL PROTECTION AGENCY

[FRL–6475–2]

Agency Information Collection Activities: Submission for OMB Review; Comment Request; Clean Water Needs Survey

AGENCY: Environmental Protection Agency (EPA).

ACTION: Notice.

SUMMARY: In compliance with the Paperwork Reduction Act (44 U.S.C. 3501 *et seq.*), this document announces that the following Information Collection Request (ICR) has been forwarded to the Office of Management and Budget (OMB) for review and approval: Clean Water Needs Survey, EPA ICR No. 0318.08, OMB Control No. 2040–0050, expiration date January 31, 2000. The ICR describes the nature of the information collection and its

expected burden and cost; where appropriate, it includes the actual data collection instrument.

DATES: Comments must be submitted on or before December 16, 1999.

FOR FURTHER INFORMATION CONTACT: Sandy Farmer at EPA by phone at (202) 260-2740, by email at farmer.sandy@epa.gov, or download a copy of the ICR off the Internet at http://www.epa.gov/icr and refer to EPA ICR No. 0318.08.

SUPPLEMENTARY INFORMATION:

Title: Clean Water Needs Survey (OMB) Control No. 2040–0050; EPA ICR No. 318.08; expiring 1/31/2000. This is an extension of a currently approved collection.

Abstract: The Needs Survey is required by sections 205(a) and 516(b)(1) of the Clean Water Act (CWA). It is a biennial inventory of publicly owned wastewater treatment works (POTWs) in the United States as well as an estimate of how many POTWs are needed to be built. The Survey is a joint effort of the States, EPA Headquarters (Office of Wastewater Management (OWM)) and EPA Regions. The Survey records costs associated with a broad range of water quality and public health problems eligible for funding from the State Revolving Fund program under Title VI of the CWA. This includes the collection and treatment of municipal wastewater, the control of combined sewer overflows, storm water management, and control of non point source runoff. The States provide this information to EPA. EPA achieves national consistency in the final results through the application of uniform guidelines and validation techniques. No confidential information is used, nor is sensitive information protected from release under the Public Information Act used.

An agency may not conduct or sponsor, and a person is not required to respond to, a collection of information unless it displays a currently valid OMB control number. The OMB control numbers for EPA's regulations are listed in 40 CFR part 9 and 48 CFR chapter 15. The **Federal Register** document required under 5 CFR 1320.8(d), soliciting comments on this collection of information was published on 7/8/99 (64 FR 36866); two comments were received.

Burden Statement: The annual reporting burden for this collection of information is estimated to average 1.47 hours per response. Burden means the total time, effort, or financial resources expended by person to generate, maintain, retain, or disclose or provide information to or for a Federal agency. This includes the time needed to review instructions; develop, acquire, install, and utilize technology and systems for the purposes of collecting, validating, and verifying information, processing and maintaining information, and disclosing and providing information; adjust the existing ways to comply with any previously applicable instructions and requirements; train personnel to be able to respond to a collection of information; search data sources; complete and review the collection of information; and transmit or otherwise disclose the information.

Respondents/Affected Entities: States, District of Columbia, Puerto Rico, Virgin Islands, and Pacific Territories.

Estimated Number of Respondents: 56.

Frequency of Response: Biennial.

Estimated Total Annual Hour Burden: 21,000 hours.

Estimated Total Annualized Non-Labor Cost Burden: $6,000.

Send comments on the Agency's need for this information, the accuracy of the provided burden estimates, and any suggested methods for minimizing respondent burden, including through the use of automated collection techniques to the following addresses. Please refer to EPA ICR No. 0318.08 and OMB Control No. 2040–0050 in any correspondence.

Ms. Sandy Farmer, U.S. Environmental Protection Agency, Office of Policy, Regulatory Information Division (2137), 401 M Street, SW, Washington, DC 20460;

and

Office of Information and Regulatory Affairs, Office of Management and Budget, Attention: Desk Officer for EPA, 725 17th Street, NW, Washington, DC 20503.

Dated: November 9, 1999.

Richard T. Westlund,

Acting Director, Regulatory Information Division.

[FR Doc. 99–29895 Filed 11–15–99; 8:45 am]

BILLING CODE 6560–50–P

ENVIRONMENTAL PROTECTION AGENCY

[FRL–6476–4]

Acid Rain Program: Draft Acid Rain Compliance Plan

AGENCY: Environmental Protection Agency (EPA).

ACTION: Notice of a draft nitrogen oxides compliance plan.

SUMMARY: The U.S. Environmental Protection Agency is issuing a draft nitrogen oxides (NO_X) compliance plan in accordance with the Acid Rain Program regulations (40 CFR parts 72 and 76). Because the Agency does not anticipate receiving adverse comments, the draft NO_X compliance plan is also being issued as a direct final action in the notice of a final NO_X compliance plan published elsewhere in today's **Federal Register**.

DATES: Comments on the draft NO_X compliance plan proposed by this action must be received on or before December 16, 1999.

ADDRESSES: *Administrative Records.* The administrative record for the NO_X compliance plan, except information protected as confidential, may be viewed during normal operating hours at U.S. EPA Region 9, 75 Hawthorne St., San Francisco, CA 94105.

Comments. Send comments, requests for public hearings, and requests to receive notice of future actions concerning NO_X compliance plans permit to David Howekamp, Director, Air and Toxics Division (A–5–2) (address above).

Submit all comments in duplicate, the commenter's name, address, and telephone number, and the commenter's interest in the matter and affiliation, if any, to the owners and operators of all units covered by the draft NO_X compliance plan. All timely comments will be considered, except those pertaining to standard provisions under 40 CFR 72.9 and issues not relevant to the draft NO_X compliance plan.

Hearings. To request a public hearing on the draft NO_X compliance plan, submit a written request stating the issues proposed to be raised in the hearing and explaining how a hearing will contribute to the decision-making process. EPA may schedule a hearing if EPA finds that it will contribute to the decision-making process by clarifying significant issues affecting the draft NO_X compliance plan.

FOR FURTHER INFORMATION CONTACT: Steve Branoff, U.S. EPA Region 9, (415) 744–1290.

SUPPLEMENTARY INFORMATION: If no significant, adverse comments are timely received, no further activity is contemplated in relation to the draft NO_X compliance plan and the NO_X compliance plan issued as a direct final action in the notice of a final NO_X compliance plan published elsewhere in today's **Federal Register** will automatically become final on the date specified in that notice. If significant, adverse comments are timely received on the draft NO_X compliance plan, the NO_X compliance plan in the notice of a final NO_X compliance plan will be

withdrawn. Because the Agency will not institute a second comment period on this notice of a draft NO_X compliance plan, any parties interested in commenting should do so during this comment period.

For further information and a detailed description of the NO_X compliance plan, see the information provided in the notice of a final NO_X compliance plan elsewhere in today's **Federal Register**.

Dated: October 22, 1999.

Brian J. McLean,

Director, Clean Air Markets Division, Office of Atmospheric Programs, Office of Air and Radiation.

[FR Doc. 99–29897 Filed 11–15–99; 8:45 am]

BILLING CODE 6560–50–P

ENVIRONMENTAL PROTECTION AGENCY

[FRL–6476–3]

Acid Rain Program: Acid Rain Compliance Plan

AGENCY: Environmental Protection Agency (EPA).

ACTION: Notice of a final nitrogen oxides compliance plan.

SUMMARY: The U.S. Environmental Protection Agency is issuing, as a direct final action, a nitrogen oxides (NO_X) compliance plan in accordance with the Acid Rain Program regulations (40 CFR parts 72 and 76). Because the Agency does not anticipate receiving adverse comments, the compliance plan is being issued as a direct final action.

DATES: The NO_X compliance plan issued in this direct final action will be final on December 27, 1999 unless significant, adverse comments are received by December 16, 1999. If significant, adverse comments are timely received on the NO_X compliance plan in this direct final action, the NO_X compliance plan will be withdrawn through a notice in the **Federal Register**.

ADDRESSES: Administrative Records. The administrative record for the NO_X compliance plan, except information protected as confidential, may be viewed during normal operating hours at U.S. EPA Region 9, 75 Hawthorne St., San Francisco, CA 94105.

FOR FURTHER INFORMATION CONTACT: Steve Branoff, U.S. EPA Region 9, (415) 744–1290.

SUPPLEMENTARY INFORMATION: Significant, adverse public comments received on the NO_X compliance plan in this direct final action that are timely received will be addressed in a subsequent approval or denial of a NO_X compliance plan. Such approval or denial will be based on the draft NO_X compliance plan in the notice of a draft NO_X compliance plan that is published elsewhere in today's **Federal Register** and that is identical to this direct final action.

U.S. EPA is issuing, under 40 CFR 76.11, a NO_X averaging plan with which units 1, 2, 3, 4, and 5 at the Four Corners utility plant in New Mexico will comply for years 2000–2004. For each year under the plan, the actual annual average rate for NO_X shall not exceed the alternative contemporaneous annual emission limitation of 0.79 lb/mmBtu for unit 1, and 0.57 lb/mmBtu each for units 2, 3, 4 and 5. The actual annual heat input for units 1, 2, and 3 shall not be greater than 17,000,000 mmBtu, 17,000,000 mmBtu, and 21,000,000 mmBtu respectively, and not less than, for units 4 and 5, 45,000,000 mmBtu each. Under the plan, the actual Btu-weighted annual average NO_X emission rate for units 1–5 shall be less than or equal to the Btu-weighted annual average NO_X emission rate for units 1–5 had they each been operated, during the same period of time, in compliance with the applicable emission limitations under 40 CFR 76.5, 76.6, or 76.7. The Designated Representative is John R. Denman.

Dated: October 22, 1999.

Brian J. McLean,

Director, Clean Air Markets Division, Office of Atmospheric Programs, Office of Air and Radiation

[FR Doc. 99–29898 Filed 11–15–99; 8:45 am]

BILLING CODE 6560–50–P

ENVIRONMENTAL PROTECTION AGENCY

[Region II Docket No. NY 36–201; FRL–6474–4]

Adequacy Status of the Submitted 2002 and 2005 Rate of Progress Plans and 2007 Attainment Demonstration for the Ozone National Ambient Air Quality Standards for Transportation Conformity Purposes for the New York State Portion of the New York-New Jersey-Connecticut Severe Ozone Nonattainment Area

AGENCY: Environmental Protection Agency (EPA).

ACTION: Notice of adequacy and inadequacy.

SUMMARY: In this notice, EPA is notifying the public that we have found that the motor vehicle emissions budgets for volatile organic compounds and nitrogen oxides in the submitted 2002 and 2005 rate of progress plans for the New York State portion of the New York-New Jersey-Connecticut severe nonattainment area for ozone to be adequate for conformity purposes. We are also notifying the public that we have found the motor vehicle emissions budgets for volatile organic compounds and nitrogen oxides in the submitted 2007 attainment demonstration for the New York State portion of the New York-New Jersey-Connecticut severe nonattainment area for ozone to be inadequate for conformity purposes. On March 2, 1999, the DC Circuit Court ruled that submitted state implementation plans (SIPs) cannot be used for conformity determinations until EPA has affirmatively found them adequate. As a result of our finding, the New York State portion of the New York-New Jersey-Connecticut severe nonattainment area for ozone can use the motor vehicle emissions budgets for volatile organic compounds and nitrogen oxides from the submitted 2002 and 2005 rate of progress plans for ozone for future conformity determinations. These budgets are effective December 1, 1999. As a result of our finding on the submitted 2007 attainment demonstration budgets for volatile organic compounds and nitrogen oxides, this area cannot use these motor vehicle emissions budgets for future conformity determinations.

FOR FURTHER INFORMATION CONTACT: Rudolph K. Kapichak, Mobile Source Team Leader, Air Programs Branch, Environmental Protection Agency, 290 Broadway, 25th Floor, New York, New York 10007–1866, (212) 637–3804, e-mail address: Kapichak.Rudolph@epa.gov.

The finding and the response to comments will be available at EPA's conformity website: *http://www.epa.gov/oms/traq*, (once there, click on the ''Conformity'' button, then look for ''Adequacy Review of SIP Submissions for Conformity'').

SUPPLEMENTARY INFORMATION:

Background

Today's document is simply an announcement of a finding that we have already made. EPA Region 2 sent a letter to the New York State Department of Environmental Conservation on November 1, 1999 stating that the motor vehicle emissions budgets in the submitted 2002 and 2005 rate of progress plans for the New York State portion of the New York-New Jersey-Connecticut severe nonattainment area for ozone are adequate for conformity purposes and that the motor vehicle emissions budgets for volatile organic compounds and nitrogen oxides in the submitted 2007 attainment

demonstration for this ozone nonattainment area are inadequate for conformity purposes. The 2007 budgets associated with the attainment demonstration are inadequate because when they are considered with all other emission sources they are not consistent with the applicable requirements for attainment. This finding will also be announced on EPA's conformity website: *http://www.epa.gov/oms/traq*, (once there, click on the ''Conformity'' button, then look for ''Adequacy Review of SIP Submissions for Conformity'').

Transportation conformity is required by section 176(c) of the Clean Air Act. EPA's conformity rule requires that transportation plans, programs, and projects conform to state air quality implementation plans (SIPs) and establishes the criteria and procedures for determining whether or not they do. Conformity to a SIP means that transportation activities will not produce new air quality violations, worsen existing violations, or delay timely attainment of the national ambient air quality standards.

The criteria by which we determine whether a SIP's motor vehicle emission budgets are adequate for conformity purposes are outlined in 40 CFR 93.118(e)(4). Please note that an adequacy review is separate from EPA's completeness review, and it also should not be used to prejudge EPA's ultimate approval of the SIP. Even if we find a budget adequate, the SIP could later be disapproved.

We've described our process for determining the adequacy of submitted SIP budgets in guidance (May 14, 1999 memo titled ''Conformity Guidance on Implementation of March 2, 1999 Conformity Court Decision''). We followed this guidance in making our adequacy determination.

Authority: 42 U.S.C. 7401 *et seq.*

Dated: November 1, 1999.

William J. Muszynski,

Acting Regional Administrator, Region 2.

[FR Doc. 99–29768 Filed 11–15–99; 8:45 am]

BILLING CODE 6560–50–P

ENVIRONMENTAL PROTECTION AGENCY

[FRL–6475–4]

Adequacy Status of Submitted State Implementation Plans for Transportation Conformity Purposes: The Phase II Attainment Demonstration for the Delaware Portion of the Philadelphia-Wilmington-Trenton Ozone Nonattainment Area

AGENCY: Environmental Protection Agency (EPA).

ACTION: Notice of adequacy status.

SUMMARY: In this document EPA is announcing that the motor vehicle emissions budgets (hereafter referred to as ''budgets'') contained in the Phase II Attainment Demonstration for the Delaware portion of the Philadelphia-Wilmington-Trenton Ozone Nonattainment Area are not adequate for transportation conformity purposes. This State Implemenation Plan (SIP) revision was submitted by the Delaware Department of Natural Resources and Environmental Control (DNREC). As a result of our finding, these budgets may not be used for future conformity determinations in Kent and New Castle Counties, Delaware.

DATES: This document is effective on November 16, 1999.

FOR FURTHER INFORMATION CONTACT: Larry Budney, U.S. EPA, Region III, 1650 Arch Street, Philadelphia, PA. 19103 at (215) 814–2184 or by e-mail at: budney.larry@epa.gov.

SUPPLEMENTARY INFORMATION: Throughout this document wherever ''we,'' ''us,'' or ''our'' are used we mean EPA. The word ''budgets'' refers to the mobile source emission budget for volatile organic compounds (VOCs) and the mobile source emissions budget for nitrogen oxides (NOx). The word SIP in this document refers to the Phase II State Implementation Plan submitted by DNREC to demonstrate attainment of the 1-hour National Ambient Air Quality Standard for ozone.

On May 28, 1998, DNREC submitted the Phase II Attainment Demonstration SIP for its portion of the Philadelphia-Wilmington-Trenton Ozone Nonattainment Area, namely for Kent and New Castle Counties, as a SIP revision. The motor vehicle emission budgets were not clearly identified and quantified as required as required in 40 CFR part 93, section 93.118(e)(4)(iii) of the federal conformity rule. Therefore, these budgets cannot be found adequate and cannot be used for conformity determinations.

On March 2, 1999, the D.C. Circuit Court ruled that budgets contained in submitted SIPs cannot be used for conformity determinations until EPA has affirmatively found them adequate. In accordance with that ruling, on August 2, 1999, we posted a notice on our web site at: http://www.epa.gov/oms/traq stating that we were taking comments on the adequacy of motor vehicle emissions budget found in the Phase II Attainment Demonstration for the Delaware Portion of the Philadelphia-Wilmington-Trenton Ozone Nonattainment Area. The comment period closed on August 31, 1999. We received no comments.

Today's document is simply an announcement of a finding that we have already made. On October 26, 1999 EPA Region III sent a letter to DNREC stating that the motor vehicle emissions budgets found in the Phase II Attainment Demonstration for the Delaware Portion of the Philadelphia-Wilmington-Trenton Ozone Nonattainment Area are not adequate. The essential information in this document will also be posted on EPA's conformity website: http://www.epa.gov/oms/traq (once there, click on the ''Conformity'' button, then look for ''Adequacy Review of Submissions for Conformity'').

Transportation conformity is required by section 176 (c) of the Clean Air Act. EPA's conformity rule requires that transportation plans, programs, and projects conform to SIPs and establishes the criteria and procedures for determining whether or not they do so. Conformity to a SIP means that transportation activities will not produce new air quality violations, worsen existing violations, or delay timely attainment of the national ambient air quality standards.

The criteria by which we determine whether a SIP's budgets are adequate for conformity purposes are outlined in 40 CFR 93.118 (e) (4). Please note that an adequacy review is separate from EPA's completeness review, and EPA's review to determine if the SIP is approvable. Even if we find a budget adequate, the SIP could later be disapproved.

We have described our process for determining the adequacy of submitted SIP budgets in guidance memorandum dated May 14, 1999 and titled ''Conformity Guidance on Implementation of March 2, 1999 Conformity Court Decision.'' We have followed this guidance in making this determination for the budgets contained in the Phase II Attainment Demonstration for the Delaware Portion of the Philadelphia-Wilmington-Trenton Ozone Nonattainment Area submitted

on May 28, 1998 for Kent and New Castle Counties. You may obtain a copy of this guidance from EPA's conformity web site: http://www.epa.gov/oms/traq (once there, click on the ''Conformity'' button) or by calling the contact name listed in **FOR FURTHER INFORMATION CONTACT** section of this document.

Authority: 42 U.S.C. 7401–7671q.

Dated: November 4, 1999.

W. Michael McCabe,

Regional Administrator, Region III.

[FR Doc. 99–29891 Filed 11–15–99; 8:45 am]

BILLING CODE 6560–50–P

ENVIRONMENTAL PROTECTION AGENCY

[FRL–6475–5]

Adequacy Status of Submitted State Implementation Plans for Transportation Conformity Purposes: Washington Region Phase II Ozone Attainment Plans for the Metropolitan Washington D.C. Ozone Nonattainment Area

AGENCY: Environmental Protection Agency (EPA).

ACTION: Notice of adequacy status.

SUMMARY: In this document EPA is announcing that the motor vehicle emissions budgets (hereafter referred to as ''budgets'') contained in the Phase II Ozone Attainment Plans submitted for the Metropolitan Washington D.C. Nonattainment Area (comprised of the District of Columbia and portions of the State of Maryland and Commonwealth of Virginia) are not adequate for transportation conformity purposes. As a result of our finding, the budgets from the Phase II Ozone Attainment Plans as submitted cannot be used for future conformity determinations in the Metropolitan Washington D.C. ozone nonattainment area.

DATES: This document is effective November 16, 1999.

FOR FURTHER INFORMATION CONTACT: Paul T. Wentworth, P.E., U.S. EPA, Region III, 1650 Arch Street, Philadelphia, PA. 19103 at (215) 814–2183 or by e-mail at: wentworth.paul@epa.gov.

SUPPLEMENTARY INFORMATION: Throughout this document wherever ''we, us'', or ''our'' are used we mean EPA. The word ''budgets'' refers to the mobile source emission budget for volatile organic compounds (VOCs) and the mobile source emissions budget for nitrogen oxides (NOx). The word SIP in this document refers to the State Implementation Plan revisions submitted to satisfy the attainment demonstration requirements for the Metropolitan Washington D.C. area, commonly referred to as the Phase II Attainment SIP.

There are six SIPs submissions associated with the Phase II Ozone Attainment Plan for the Metropolitan Washington DC ozone nonattainment area. They contain two motor vehicle emissions budgets, one for NOx and one for VOC. The six SIPs and their respective submittal dates follow below:

State	Submittal date
Maryland portion of the Washington area.	(1) April 29, 1998—Initial Submittal. (2) August 17, 1998—Supplement.
Virginia portion of the Washington area.	(1) April 29, 1998—Initial Submittal. (2) August 18, 1998—Supplement.
The District portion of the Washington area.	(1) April 24, 1998—Initial Submittal. (2) October 27, 1998—Supplement.

On March 2, 1999, the D.C. Circuit Court ruled that budgets contained in submitted SIPs cannot be used for conformity determinations until EPA has affirmatively found them adequate. In accordance with that ruling, on August 2, 1999, we posted a notice on our web site at: http://www.epa.gov/oms/traq stating that we were taking comments on the adequacy of motor vehicle emissions budget found in the Phase II Ozone Attainment Plans for the Metropolitan Washington D.C. Nonattainment Area. The comment period closed on August 31, 1999. We received no comments.

Today's document is simply an announcement of a finding that we have already made. On October 26, 1999, EPA Region III sent letters to the Virginia Department of Environmental Quality, the Maryland Department of the Environment, and the Washington D.C. Department of Health, Air Quality Division, stating that the motor vehicle emissions budgets found in the Phase II Ozone Attainment Plans for the Metropolitan Washington Nonattainment Area are not adequate for transportation conformity purposes. The essential information in this document will also be posted on EPA's conformity website: http://www.epa.gov/oms/traq (once there, click on the ''Conformity'' button, then look for ''Adequacy Review of Submissions for Conformity'').

Transportation conformity is required by section 176 (c) of the Clean Air Act. EPA's conformity rule requires that transportation plans, programs, and projects conform to SIPs and establishes the criteria and procedures for determining whether or not they do so. Conformity to a SIP means that transportation activities will not produce new air quality violations, worsen existing violations, or delay timely attainment of the national ambient air quality standards.

The criteria by which we determine whether a SIP's budgets are adequate for conformity purposes are outlined in 40 CFR 93.118 (e) (4). Please note that an adequacy review is separate from EPA's completeness review, and EPA's review to determine if the SIP is approvable. Even if we find a budget adequate, the SIP could later be disapproved.

We have described our process for determining the adequacy of submitted SIP budgets in guidance memorandum dated May 14, 1999 and titled ''Conformity Guidance on Implementation of March 2, 1999 Conformity Court Decision''. We have followed this guidance in making this adequacy determination for the budgets contained in the Region Phase II Ozone Attainment Plans for the Metropolitan Washington Nonattainment Area. You may obtain a copy of this guidance from EPA's conformity web site: http://www.epa.gov/oms/traq (once there, click on the ''Conformity'' button) or by calling the contact name listed in ''For Further Information Contact'' section of this document.

Authority: 42 U.S.C. 7401–7671q.

Dated: November 4, 1999.

W. Michael McCabe,

Regional Administrator, Region III.

[FR Doc. 99–29892 Filed 11–15–99; 8:45 am]

BILLING CODE 6560–50–P

ENVIRONMENTAL PROTECTION AGENCY

[FRL–6475–7]

Adequacy Status of Submitted State Implementation Plans for Transportation Conformity Purposes: Phase II Ozone Attainment SIPs for the Baltimore Area and Cecil County

AGENCY: Environmental Protection Agency (EPA).

ACTION: Notice of adequacy status.

SUMMARY: In this document EPA is announcing that the motor vehicle emissions budgets (hereafter referred to as ''budgets'') contained in the submitted Phase II Ozone Attainment SIPs for the Baltimore ozone nonattainment area and the Cecil County, Maryland portion of the Philadelphia-Wilmington-Trenton ozone nonattainment area are not adequate for transportation conformity purposes. As a result of our finding, the budgets from these submitted State Implementation Plans (SIPs) may not be used for future conformity

determinations in the Baltimore area and in Cecil County.

DATES: This document is effective November 16, 1999.

FOR FURTHER INFORMATION CONTACT: Paul T. Wentworth, P.E., U.S. EPA, Region III, 1650 Arch Street, Philadelphia, PA. 19103 at (215) 814–2183 or by e-mail at: wentworth.paul@epa.gov.

SUPPLEMENTARY INFORMATION: Throughout this document wherever ''we,'' ''us,'' or ''our'' are used we mean EPA. The word ''budgets'' refers to the mobile source emission budget for volatile organic compounds (VOCs) and the mobile source emissions budget for nitrogen oxides (NO_X). The word SIP in this document refers to the State Implementation Plan revisions submitted to satisfy the requirements for attainment of the 1-hour ozone standard.

On April 24, 1998, we received Phase II Ozone Attainment SIPs for the Baltimore area and the Cecil County portion of the Philadelphia-Wilmington-Trenton ozone nonattainment areas from the Maryland Department of the Environment. The April 24, 1998 submittals contained motor vehicle emissions budgets for NO_X and VOC for the Baltimore area and for Cecil County. On March 2, 1999, the D.C. Circuit Court ruled that budgets contained in submitted SIPs cannot be used for conformity determinations until EPA has affirmatively found them adequate. In accordance with that ruling, on August 2, 1999, we posted a notice on our web site at: http://www.epa.gov/oms/traq stating that we were taking comments on the adequacy of motor vehicle emissions budget found in the April 24, 1998 submittals. The comment period closed on August 31, 1999. We received no comments.

Today's document is simply an announcement of a finding that we have already made. On October 26, 1999, EPA Region III sent letters to the Maryland Department of the Environment stating that the motor vehicle emissions budgets found in the April 24, 1998 submittals for the Baltimore area and for Cecil County are not adequate for transportation conformity purposes. The essential information in this document will also be posted on EPA's conformity website: http://www.epa.gov/oms/traq (once there, click on the ''Conformity'' button, then look for ''Adequacy Review of Submissions for Conformity'').

Transportation conformity is required by section 176 (c) of the Clean Air Act. EPA's conformity rule requires that transportation plans, programs, and projects conform to SIPs and establishes the criteria and procedures for determining whether or not they do so. Conformity to a SIP means that transportation activities will not produce new air quality violations, worsen existing violations, or delay timely attainment of the national ambient air quality standards. The criteria by which we determine whether a SIP's budgets are adequate for conformity purposes are outlined in 40 CFR 93.118 (e) (4). Please note that an adequacy review is separate from EPA's completeness review, and EPA's review to determine if the SIP is approvable. Even if we find a budget adequate, the SIP could later be disapproved. We have described our process for determining the adequacy of submitted SIP budgets in guidance memorandum dated May 14, 1999 and titled ''Conformity Guidance on Implementation of March 2, 1999 Conformity Court Decision''. We have followed this guidance in making this adequacy determination for the budgets contained in the Phase II Ozone Attainment SIPs for the Baltimore area and for Cecil County submitted on April 24, 1998. You may obtain a copy of this guidance from EPA's conformity web site: http://www.epa.gov/oms/traq (once there, click on the ''Conformity'' button) or by calling the contact name listed in **FOR FURTHER INFORMATION CONTACT** section of this document.

Authority: 42 U.S.C. 7401–7671q.

Dated: November 4, 1999.

W. Michael McCabe,

Regional Administrator, Region III.

[FR Doc. 99–29887 Filed 11–15–99; 8:45 am]

BILLING CODE 6560–50–P

ENVIRONMENTAL PROTECTION AGENCY

[Region II Docket No. NJ 38–199; FRL–6474–5]

Adequacy Status of New Jersey State Implementation Plan (SIP) for Attainment and Maintenance of the Ozone National Ambient Air Quality Standards for Transportation Conformity Purposes

AGENCY: Environmental Protection Agency (EPA).

ACTION: Notice of inadequacy.

SUMMARY: In this document, EPA is notifying the public that we have found that the motor vehicle emissions budgets for the New Jersey counties in the Philadelphia-Wilmington-Trenton nonattainment area, and the New Jersey counties in the New York-Northern New Jersey-Long Island nonattainment area submitted in the New Jersey State Implementation Plan (SIP) for Attainment and Maintenance of the Ozone National Ambient Air Quality Standards for Transportation Conformity Purposes inadequate for conformity purposes. On March 2, 1999, the DC Circuit Court ruled that submitted SIPs cannot be used for conformity determinations until EPA has affirmatively found them adequate. As a result of our finding, the New Jersey counties in the Philadelphia-Wilmington-Trenton nonattainment area, and the New Jersey counties in the New York-Northern New Jersey-Long Island nonattainment area cannot use the motor vehicle emissions budgets from the submitted State of New Jersey State Implementation Plan (SIP) for Attainment and Maintenance of the Ozone National Ambient Air Quality Standards for Transportation Conformity Purposes for future conformity determinations.

FOR FURTHER INFORMATION CONTACT: The finding and the response to comments will be available at EPA's conformity website: *http://www.epa.gov/oms/traq*, (once there, click on the ''Conformity'' button, then look for ''Adequacy Review of SIP Submissions for Conformity''). The regional contact is: Rudolph Kapichak, Air Programs Branch, Environmental Protection Agency, 290 Broadway, 25th Floor, New York, New York 10278, (212) 637–3804.

SUPPLEMENTARY INFORMATION:

Background

Today's notice is simply an announcement of a finding that we have already made. EPA Region 2 sent a letter to the New Jersey Department of Environmental Protection on October 25, 1999, stating that the motor vehicle emissions budgets for the New Jersey counties in the Philadelphia-Wilmington-Trenton nonattainment area for budget year 2005, and the New Jersey counties in the New York-Northern New Jersey-Long Island nonattainment area for budget year 2007 submitted In the New Jersey State Implementation Plan (SIP) for Attainment and Maintenance of the Ozone National Ambient Air Quality Standards for Transportation Conformity Purposes are inadequate because the submittal does not contain clearly identified and quantified budgets. This finding will also be announced on EPA's conformity website: *http://www.epa.gov/oms/traq*, (once there, click on the ''Conformity'' button, then look for ''Adequacy Review of SIP Submissions for Conformity'').

Transportation conformity is required by section 176(c) of the Clean Air Act.

EPA's conformity rule requires that transportation plans, programs, and projects conform to state air quality implementation plans (SIPs) and establishes the criteria and procedures for determining whether or not they do. Conformity to a SIP means that transportation activities will not produce new air quality violations, worsen existing violations, or delay timely attainment of the national ambient air quality standards.

The criteria by which we determine whether a SIP's motor vehicle emission budgets are adequate for conformity purposes are outlined in 40 CFR 93.118(e)(4). Please note that an adequacy review is separate from EPA's completeness review, and it also should not be used to prejudge EPA's ultimate approval of the SIP. Even if we find a budget adequate, the SIP could later be disapproved.

We've described our process for determining the adequacy of submitted SIP budgets in guidance (May 14, 1999 memo titled ''Conformity Guidance on Implementation of March 2, 1999 Conformity Court Decision''). We followed this guidance in making our adequacy determination.

Authority: 42 U.S.C. 7401 *et seq.*

Dated: October 25, 1999.

William J. Muszynski,

Acting Regional Administration, Region 2.

[FR Doc. 99–29767 Filed 11–15–99; 8:45 am]

BILLING CODE 6560–50–P

ENVIRONMENTAL PROTECTION AGENCY

[FRL–6475–8]

Adequacy Status of Submitted State Implementation Plans for Transportation Conformity Purposes: State Implementation Plan for Ozone for the Pittsburgh-Beaver Valley Nonattainment Area

AGENCY: Environmental Protection Agency (EPA).

ACTION: Notice of adequacy status.

SUMMARY: In this document EPA is announcing that the motor vehicle emissions budgets (hereafter referred to as ''budgets'') contained the State Implementation Plan (SIP) for Ozone for the Pittsburgh-Beaver Valley Nonattainment Area by the Pennsylvania Department of Environmental Protection are not adequate for transportation conformity purposes. As a result of our finding, the budgets from this submitted SIP cannot be used for future conformity determinations in the Pittsburgh-Beaver Valley ozone nonattainment area.

DATES: This document is effective November 16, 1999.

FOR FURTHER INFORMATION CONTACT: Larry Budney, U.S. EPA, Region III, 1650 Arch Street, Philadelphia, PA. 19103 at (215) 814–2184 or by e-mail at: budney.larry@epa.gov.

SUPPLEMENTARY INFORMATION: Throughout this document wherever ''we'', ''us,'' or ''our'' are used we mean EPA. The word ''budgets'' refers to the mobile source emission budget for volatile organic compounds (VOCs) and the mobile source emissions budget for nitrogen oxides (NO_X). The word SIP in this document refers to the submittal made by PADEP to satisfy the requirements for demonstrating attainment.

On December 31, 1997, PADEP submitted the State Implementation Plan for Ozone for the Pittsburgh-Beaver Valley Nonattainment Area. This SIP did not contain clearly identified and precisely quantified motor vehicle emission budgets for NO_X and VOCs. On March 2, 1999, the D.C. Circuit Court ruled that budgets contained in submitted SIPs cannot be used for conformity determinations until EPA has affirmatively found them adequate. In accordance with that ruling, on August 2, 1999, we posted a notice on our web site at: http://www.epa.gov/oms/traq stating that we were taking comments on the adequacy of motor vehicle emissions budget found in the State Implementation Plan for Ozone for the Pittsburgh-Beaver Valley Nonattainment Area. The comment period closed on August 31, 1999, and we received no comments.

Today's document is simply an announcement of a finding that we have already made. On October 26, 1999, EPA Region III sent a letter to PADEP stating that the motor vehicle emissions budgets found in the State Implementation Plan for Ozone for the Pittsburgh-Beaver Valley Nonattainment Area are not adequate. The essential information in this document will also be posted on EPA's conformity website: http://www.epa.gov/oms/traq (once there, click on the ''Conformity'' button, then look for ''Adequacy Review of Submissions for Conformity'').

Transportation conformity is required by section 176 (c) of the Clean Air Act. EPA's conformity rule requires that transportation plans, programs, and projects conform to SIPs and establishes the criteria and procedures for determining whether or not they do so. Conformity to a SIP means that transportation activities will not produce new air quality violations, worsen existing violations, or delay timely attainment of the national ambient air quality standards.

The criteria by which we determine whether a SIP's budgets are adequate for conformity purposes are outlined in 40 CFR 93.118 (e) (4). Please note that an adequacy review is separate from EPA's completeness review, and EPA's review to determine if the SIP is approvable. Even if we find a budget adequate, the SIP could later be disapproved.

We have described our process for determining the adequacy of submitted SIP budgets in a guidance memorandum dated May 14, 1999 and titled ''Conformity Guidance on Implementation of March 2, 1999 Conformity Court Decision.'' We have followed this guidance in making this adequacy determination for the budgets contained in the State Implementation Plan for Ozone for the Pittsburgh-Beaver Valley Nonattainment Area. You may obtain a copy of this guidance from EPA's conformity web site: http://www.epa.gov/oms/traq (once there, click on the ''Conformity'' button) or by calling the contact name listed in **FOR FURTHER INFORMATION CONTACT** section of this document.

Authority: 42 U.S.C. 7401–7671q.

Dated: November 4, 1999.

W. Michael McCabe,

Regional Administrator, Region III.

[FR Doc. 99–29888 Filed 11–15–99; 8:45 am]

BILLING CODE 6560–50–P

ENVIRONMENTAL PROTECTION AGENCY

[FRL–6475–3]

Adequacy Status of Submitted State Implementation Plans for Transportation Conformity Purposes: State Implementation Plan for the Attainment and Maintenance of the NAAQS for Ozone—Southeastern Pennsylvania

AGENCY: Environmental Protection Agency (EPA).

ACTION: Notice of adequacy status.

SUMMARY: In this document EPA is announcing that the attainment motor vehicle emissions budgets (hereafter referred to as ''budgets'') contained in the State Implementation Plan for the Attainment and Maintenance of the NAAQS for Ozone Meeting the Requirements of the Alternative Ozone Attainment Demonstration Policy—Phase II for Southeastern Pennsylvania are not adequate for transportation conformity purposes. We are

concurrently announcing that the Rate of Progress (ROP) motor vehicle emission budgets contained in this same State Implementation Plan submittal are adequate for transportation conformity purposes. As a result of our finding, the attainment budgets contained in the submitted Phase II Ozone Attainment and Maintenance Plan may not be used for future conformity determinations, but the ROP motor vehicle emission budgets contained in the same submittal may be used for future conformity determinations in the Southeastern Pennsylvania area.

DATES: These ROP budgets are effective on December 1, 1999.

FOR FURTHER INFORMATION CONTACT: Larry Budney, U.S. EPA, Region III, 1650 Arch Street, Philadelphia, PA. 19103 at (215) 814–2184 or by e-mail at: budney.larry@epa.gov.

SUPPLEMENTARY INFORMATION: Throughout this document wherever ''we,'' ''us,'' or ''our'' are used we mean EPA. The word ''budgets'' refers to the mobile source emission budget for volatile organic compounds (VOCs) and the mobile source emissions budget for nitrogen oxides (NO_X). The word SIP in this document refers to the Phase II State Implementation Plan submitted to to demonstrate ROP and to demonstrate attainment and maintenance of the 1-hour National Ambient Air Quality Standard for ozone in the Pennsylvania portion of the Philadelphia-Wilmington-Trenton ozone nonattainment area.

On April 30, 1998, the Pennsylvania Department of Environmental Protection (PADEP) submitted its State Implementation Plan for the Attainment and Maintenance of the NAAQS for Ozone Meeting the Requirements of the Alternative Ozone Attainment Demonstration Policy—Phase II. The SIP contained mobile source vehicle emissions budgets both for ROP and for attainment. Based upon its review, EPA is finding the motor vehicle emission budgets in the attainment plan portion of the submittal not adequate for the purposes of transportation conformity. The attainment motor vehicle emission budgets, when considered together with all other emission reductions, were not consistent with applicable requirements for attainment as required in 40 CFR part 93, § 93.118(e)(4)(iv) of the conformity rule. We are concurrently finding the motor vehicle emission budgets in the 1999, 2002, and 2005 ROP plan adequate since they met the review criteria in 40 CFR part 93, section 93.118(e)(4)(i) through (e)(4)(vi) of the conformity rule.

On March 2, 1999, the D.C Circuit Court ruled that motor vehicle emission budgets contained in submitted SIPs cannot be used for conformity determinations until EPA has affirmatively found them adequate. In accordance with that ruling, on August 2, 1999, we posted a notice on our web site at: http://www.epa.gov/oms/traq stating that we were taking comments on the adequacy of motor vehicle emissions budgets found in the State Implementation Plan for the Attainment and Maintenance of the NAAQS for Ozone Meeting the Requirements of the Alternative Ozone Attainment Demonstration Policy—Phase II. The comment period closed on August 31, 1999. We received no comments.

Today's document is simply an announcement of a finding that we have already made. On October 26, 1999 EPA Region III sent a letter to the PADEP stating that the attainment motor vehicle emissions budgets found in the State Implementation Plan for the Attainment and Maintenance of the NAAQS for Ozone Meeting the Requirements of the Alternative Ozone Attainment Demonstration Policy—Phase II are not adequate for transportation conformity purposes. We also indicated that we were finding the ROP motor vehicle emission budgets found in the SIP adequate for transportation conformity purposes. The essential information in this document will also be posted on EPA's conformity website: http://www.epa.gov/oms/traq (once there, click on the ''Conformity'' button, then look for ''Adequacy Review of Submissions for Conformity'').

Transportation conformity is required by section 176 (c) of the Clean Air Act. EPA's conformity rule requires that transportation plans, programs, and projects conform to SIPs and establishes the criteria and procedures for determining whether or not they do so. Conformity to a SIP means that transportation activities will not produce new air quality violations, worsen existing violations, or delay timely attainment of the national ambient air quality standards. The criteria by which we determine whether a SIP's budgets are adequate for conformity purposes are outlined in 40 CFR 93.118 (e) (4). Please note that an adequacy review is separate from EPA's completeness review, and EPA's review to determine if the SIP is approvable. Even if we find a budget adequate, the SIP could later be disapproved.

We have described our process for determining the adequacy of submitted SIP budgets in guidance memorandum dated May 14, 1999 and titled ''Conformity Guidance on Implementation of March 2, 1999 Conformity Court Decision''. We have followed this guidance in making this adequacy determination for the budgets contained in the State Implementation Plan for the Attainment and Maintenance of the NAAQS for Ozone Meeting the Requirements of the Alternative Ozone Attainment Demonstration Policy—Phase II submitted on April 30, 1998 by PADEP. You may obtain a copy of this guidance from EPA's conformity web site: http://www.epa.gov/oms/traq (once there, click on the ''Conformity'' button) or by calling the contact name listed in ''For Further Information Contact'' section of this document.

Authority: 42 U.S.C. 7401–7671q.

Dated: November 4, 1999.

W. Michael McCabe,

Regional Administrator, Region III.

[FR Doc. 99–29890 Filed 11–15–99; 8:45 am]

BILLING CODE 6560–50–P

ENVIRONMENTAL PROTECTION AGENCY

[FRL–6475–6]

Adequacy Status of Submitted State Implementation Plans for Transportation Conformity Purposes: Lancaster Area Request for Redesignation as Attainment for Ozone—Maintenance Plan

AGENCY: Environmental Protection Agency (EPA).

ACTION: Notice of adequacy status.

SUMMARY: In this document EPA is announcing that the motor vehicle emissions budgets (hereafter referred to as ''budgets'') contained in the maintenance plan submitted with the Lancaster Area Request for Redesignation as Attainment for Ozone for the Lancaster, Pennsylvania ozone nonattainment area are not adequate for transportation conformity purposes. As a result of our finding, the budgets from the submitted maintenance plan revision cannot be used for future conformity determinations in the Lancaster ozone nonattainment area.

DATES: This document is effective November 16, 1999.

FOR FURTHER INFORMATION CONTACT: Larry Budney, U.S. EPA, Region III, 1650 Arch Street, Philadelphia, PA. 19103 at (215) 814–2184 or by e-mail at: budney.larry@epa.gov.

SUPPLEMENTARY INFORMATION: Throughout this document wherever ''we'', ''us,'' or ''our'' are used we mean EPA. The word ''budgets'' refers to the mobile source emission budget for volatile organic compounds (VOCs) and the mobile source emissions budget for

nitrogen oxides (NO_X). The word SIP in this document refers to the maintenance plan which was submitted as State Implementation Plan revision to satisfy the Clean Air Act's requirements for such a plan when requesting a redesignation to attainment for ozone.

On January 26, 1996, we received the Lancaster Area Request for Redesignation as Attainment for Ozone. The submittal included the required maintenance plan as a SIP. This submitted maintenance plan contained motor vehicle budgets for NO_X and VOCs. On March 2, 1999, the US District Court ruled that budgets contained in submitted SIPs cannot be used for conformity determinations until EPA has affirmatively found them adequate. In accordance with that ruling, on August 2, 1999, we posted a notice on our web site at: http://www.epa.gov/oms/traq stating that we were taking comments on the adequacy of motor vehicle emissions budget found in the Lancaster Area Request for Redesignation as Attainment for Ozone's submitted maintenance plan SIP for the Lancaster, Pennsylvania ozone nonattainment area. The comment period closed on August 31, 1999, and we received no comments.

Today's document is simply an announcement of a finding that we have already made. On October 26, 1999, EPA Region III sent a letter to the Pennsylvania Department of Environmental Protection stating that the motor vehicle emissions budgets found in the Lancaster Area Request for Redesignation as Attainment for Ozone's maintenance plan SIP for the Lancaster ozone nonattainment area are not adequate. The essential information in this notice will also be posted on EPA's conformity website: http://www.epa.gov/oms/traq (once there, click on the ''Conformity'' button, then look for ''Adequacy Review of Submissions for Conformity''). Transportation conformity is required by section 176 (c) of the Clean Air Act. EPA's conformity rule requires that transportation plans, programs, and projects conform to SIPs and establishes the criteria and procedures for determining whether or not they do so. Conformity to a SIP means that transportation activities will not produce new air quality violations, worsen existing violations, or delay timely attainment of the national ambient air quality standards. The criteria by which we determine whether a SIP's budgets are adequate for conformity purposes are outlined in 40 CFR 93.118(e)(4). Please note that an adequacy review is separate from EPA's completeness review, and EPA's review to determine if the SIP is approvable. Even if we find a budget adequate, the SIP could later be disapproved.

We have described our process for determining the adequacy of submitted SIP budgets in a guidance memorandum dated May 14, 1999 and titled ''Conformity Guidance on Implementation of March 2, 1999 Conformity Court Decision''. We have followed this guidance in making this adequacy determination for the budgets contained in the Lancaster Area Request for Redesignation as Attainment for Ozone's maintenance plan SIP for the Lancaster, Pennsylvania ozone nonattainment area. You may obtain a copy of this guidance from EPA's conformity web site: http://www.epa.gov/oms/traq (once there, click on the ''Conformity'' button) or by calling the contact name listed in **FOR FURTHER INFORMATION CONTACT** section of this document.

Authority: 42 U.S.C. 7401–7671q.

Dated: November 4, 1999.

W. Michael McCabe,

Regional Administrator, Region III.

[FR Doc. 99–29893 Filed 11–15–99; 8:45 am]

BILLING CODE 6560–50–P

ENVIRONMENTAL PROTECTION AGENCY

[FRL–6476–2]

Comprehensive Environmental Response, Compensation and Liability Act (CERCLA) or Superfund, Section 311(b)(9)(A), CERCLA Section 311(b)(3); Announcement of Competition for EPA's Brownfields Job Training and Development Demonstration Pilots

AGENCY: Environmental Protection Agency.

ACTION: Notice.

SUMMARY: The Environmental Protection Agency will begin accepting applications for Brownfields Job Training and Development Demonstration Pilots through March 3, 2000. The application period will close March 3, 2000 and the Agency intends to competitively select ten Pilots by May, 2000.

DATES: This action is effective November 16, 1999. All proposals must be received by March 3, 2000.

ADDRESSES: Interested applicants must submit a response to the Brownfields Job Training and Development Demonstration Pilot Guidelines. Job training guidelines can be obtained via the Internet: http://www.epa.gov/brownfields/, or by calling the Superfund Hotline at 1–800–424–9346 (TDD for the hearing impaired at 1–800–553–7672).

FOR FURTHER INFORMATION CONTACT: EPA's Office of Solid Waste and Emergency Response, Myra Blakely, Outreach and Special Projects Staff, (202) 260–4527 or Nancy Wilson at (202) 260–1910.

SUPPLEMENTARY INFORMATION: The Brownfields Job Training and Development Demonstration Pilots will each be funded up to $200,000 over two-years. These funds are to be used to bring together community groups, job training organizations, employers, investors, lenders, developers, and other affected parties to address the issue of providing training for residents in communities impacted by brownfields. The goals of the pilots are to facilitate cleanup of brownfields sites contaminated with hazardous substances and prepare the trainees for future employment in the environmental field. The pilot projects must prepare trainees in activities that can be usefully applied to a cleanup employing an alternative or innovative technology.

EPA expects to select approximately 10 Brownfields Environmental Job Training and Development pilots by the end of May 2000. Pilot applicants must be located within or near one of the 307 pre-2000 brownfields assessment pilot communities. Colleges, universities, non-profit training centers, community-based job training organizations, states, cities, towns, counties, U.S. Territories, and Federally recognized Indian Tribes are eligible to apply for funds. EPA welcomes and encourages applications from coalitions of such entities, but a single eligible entity must be identified as the legal recipient. Entities with experience in providing environmental job training and placement programs are invited to apply. The deadline for applications is March 3, 2000.

EPA's Brownfields Initiative is an organized commitment to help communities revitalize abandoned contaminated properties, and to thereby eliminate potential health risks and restore economic vitality to areas where these properties exist. EPA defines brownfields as abandoned, idled or under-used industrial and commercial facilities where expansion or redevelopment is complicated by real or perceived environmental contamination.

Submission to Congress and the General Accounting Office

The Congressional Review Act, 5 U.S.C. 801 *et seq.*, as added by the Small

Business Regulatory Enforcement Fairness Act of 1996, generally provides that before a rule may take effect, the agency promulgating the rule must submit a rule report, which includes a copy of the rule, to each House of the Congress and to the Comptroller General of the United States. EPA will submit a report containing this action and other required information to the U.S. Senate, the U.S. House of Representatives, and the Comptroller General of the United States prior to publication of the rule in the **Federal Register**. This action is not a ''major rule'' as defined by 5 U.S.C. 804(2).

Dated: October 26, 1999.

Linda Garczynski,

Director, Outreach and Special Projects Staff, Office of Solid Waste and Emergency Response.

[FR Doc. 99–29896 Filed 11–15–99; 8:45 am]

BILLING CODE 6560–50–P

EQUAL EMPLOYMENT OPPORTUNITY COMMISSION

Sunshine Act Meeting

AGENCY HOLDING THE MEETING: Equal Employment Opportunity Commission.

''FEDERAL REGISTER'' CITATION OF PREVIOUS ANNOUNCEMENT: Scheduled to publish in the issue of November 12, 1999.

PREVIOUSLY ANNOUNCED TIME AND DATE OF MEETING: Tuesday, November 16, 1999, at 2:00 p.m. (Eastern Time).

CHANGE IN THE MEETING: The meeting has been cancelled.

CONTACT PERSON FOR MORE INFORMATION: Frances M. Hart, Executive Officer on (202) 663–4070.

Dated: November 10, 1999.

Frances M. Hart,

Executive Officer, Executive Secretariat.

[FR Doc. 99–29939 Filed 11–10–99; 4:45 pm]

BILLING CODE 6750–06–M

FEDERAL COMMUNICATIONS COMMISSION

Public Information Collections Approved by Office of Management and Budget

November 1, 1999.

The Federal Communications Commission (FCC) has received Office of Management and Budget (OMB) approval for the following public information collections pursuant to the Paperwork Reduction Act of 1995, Public Law 104–13. An agency may not conduct or sponsor and a person is not required to respond to a collection of information unless it displays a currently valid control number. For further information contact Shoko B. Hair, Federal Communications Commission, (202) 418–1379.

Federal Communications Commission

OMB Control No.: 3060–0715.

Expiration Date: 06/30/2001.

Title: Implementation of the Telecommunications Act of 1996: Telecommunications Carriers Use of Customer Proprietary Network Information and Other Customer Information—CC Docket 96–115.

Form No.: N/A.

Respondents: Business or other for profit.

Estimated Annual Burden: 2000 respondents; 16.75 hours per response (avg.); 33,500 total annual burden hours for all collections.

Estimated Annual Reporting and Recordkeeping Cost Burden: $0.

Frequency of Response: On occasion; One-time requirement; Recordkeeping; Third Party Disclosure.

Description: In the Third Report and Order issued in CC Docket No. 96–115, the Commission clarifies and particularizes the statutory obligations of section 222 of the Communications Act of 1996. Section 222(e) states that a telecommunications carrier that provides ''telephone exchange service'' shall provide subscriber list information ''gathered in its capacity as a provider of such service on a timely and unbundled basis, under nondiscriminatory and reasonable rates, terms, and conditions, to any person upon request for the purpose of publishing directories in any format.'' a. Provision of Subscriber List Information: Telecommunications carriers that provide telephone exchange service must provide subscriber list information gathered in its capacity as a provider of such service on a timely and unbundled basis, under nondiscriminatory and reasonable rates, terms, and conditions, to any person upon request for the purpose of publishing directories in any format. See 47 CFR Section 64.2309. Carriers are obligated to provide updated subscriber list information to requesting directory publishers. Carriers are required to provide requesting directory publishers with notice of changes in subscriber list information to the extent those changes reflect customers' decisions to cease having particular telephone numbers listed. Upon request, a carrier that has received at least thirty days advance notice also must provide subscriber list information on any periodic basis that the carrier's internal systems can accommodate. (No. of respondents: 2000; hours per response: 10 hours; total annual burden: 20,000 hours). b. Notifications: A carrier must provide subscriber list information at the time requested by the directory publisher, provided that the directory publisher has given at least thirty days advance notice and the carrier's internal systems permit the request to be filled within that time frame. If a carrier's internal systems do not permit the carrier to provide subscriber list information within the requested timeframe, the carrier must inform the directory publisher that the requested schedule cannot be accommodated and tell the directory publisher which schedules can be accommodated. See 47 CFR 64.2313. A directory publisher may request that a carrier unbundle subscriber list information on any basis for the purpose of publishing one or more directories. If the carrier's internal systems do not permit it to unbundle subscriber list information on the basis a directory publisher requests, the carrier must inform the directory publisher that it cannot unbundle subscriber list information on the requested basis and tell the directory publisher the basis on which the carrier can unbundle subscriber list information; and provide subscriber list information to the directory publisher on the basis the directory publisher chooses from among the available bases. See 47 CFR Section 64.2317. A carrier shall provide subscriber list information obtained in its capacity as a provider of telephone exchange service to a requesting directory publisher in the format the publisher specifies, if the carrier's internal systems can accommodate that format. If a carrier's internal system do not permit the carrier to provide subscriber list information in the format the directory publisher specifies, the carrier shall within thirty days of receiving the publisher's request, inform the directory publisher that the requested format cannot be accommodated and tell the directory publisher which formats can be accommodated; and provide the requested subscriber list information in the format the directory publisher chooses from among the available formats. See 47 CFR Section 64.2329. If a carrier finds that it cannot accommodate all of a group of multiple or conflicting requests for subscriber list information within the specified time frames, the carrier shall respond to those requests on a nondiscriminatory basis. The carrier shall inform each affected directory publisher of such

requests within thirty days of when it receives the publisher's request. (No. of respondents: 1000; hours per response: .5 hours; total annual burden: 500 hours). c. Cost Study: In the event a directory publisher's files a complaint regarding a carrier's subscriber list information rates, the carrier must present a cost study providing credible and verifiable cost data to justify each challenged rate. This cost study must clearly and specifically identify and justify: incremental costs, common costs, overhead, and other information. The carrier should provide this information separately for both base file and updated subscriber list information if the complainant challenges both types of rates. (No. of respondents: 100 respondents; hours per response: 100 hours; total annual burden: 10,000 hours). d. Certification: A telecommunications carrier may require persons requesting subscriber list information pursuant to section 222(e) of the Communications Act or section 64.2309 to certify that the publisher will use the information only for purposes of publishing a directory. The certification may be either oral or written, at the carrier's option. See 47 CFR Section 64.2337. (No. of respondents: 2000; hours per response: .5 hour; total annual burden: 1000 hours). e. Disclosure of Contracts, Rates, Terms and Conditions and Recordkeeping: A telecommunications carrier must retain, for at least one year after its expiration, each written contract that it has executed for the provision of subscriber list information for directory publishing purposes to itself, an affiliate, or an entity that publishes directories on the carrier's behalf. A telecommunications carrier must maintain, for at least one year after the carrier provides subscriber list information for directory publishing purposes to itself, an affiliate, or an entity that publishes directories on the carrier's behalf, records of any of its rates, terms, and conditions for providing that subscriber list information which are not set forth in a written contract. These records and contracts shall be made available to Commission and to a directory publisher upon request. See 47 CFR 64.2341. (No. of respondents: 2000; hours per response: 1 hour; total annual burden: 2000 hours). All of the collections will be used to ensure that telecommunications carriers comply with section 222(e) of the Communications Act of 1934, as amended and with subscriber list information requirements the Commission promulgates in the Third Report and Order. Obligation to comply: Mandatory.

OMB Control No.: 3060–0741.

Expiration Date: 10/31/2002.

Title: Implementation of the Local Competition Provisions of the Telecommunications Act of 1996—CC Docket No. 96–98, Second Report and Order and Memorandum Opinion and Order; Second Order on Reconsideration.

Form No.: N/A.

Respondents: Business or other for profit.

Estimated Annual Burden: 2000 respondents; 114.3 hours per response(avg.); 228,750 total annual burden hours for all collections.

Estimated Annual Reporting and Recordkeeping Cost Burden: $60,000.

Frequency of Response: On occasion; Third Party Disclosure.

Description: Section 251 is designed to accelerate private sector development and deployment of telecommunications technologies and services by supporting competition. In the Second Report and Order issued in CC Docket No. 96–98, the Commission adopted rules and regulations designed to implement certain provisions of section 251, and eliminate operational barriers to competition in the telecommunications services market. In the Second Order on Reconsideration issued in the proceeding, the Commission resolved and clarified specific issues regarding the nondiscriminatory access obligations of local exchange carriers.

a. Submission of toll dialing parity implementation plans: Pursuant to section 251(b)(3), each LEC is required to submit a plan to the state regulatory commission for each state in which it provides telephone exchange service setting forth the LEC's plan for implementing toll dialing parity in that state based on local access and transport boundaries. See 47 CFR Section 51.213.

(No. of respondents: 135; hours per response: 100 hours; total annual burden:135,000 hours).

b. Justification for noncompliance: Pursuant to section 251(b)(3), each LEC that is not a BOC that begins providing in-region, interLATA or in-region interstate toll services in a state before August 8, 1997, and is unable to implement intraLATA and interLATA toll dialing parity throughout that state by August 8, 1997, must submit a notification to the Commission. See 47 CFR Section 51.211(c). (No. of respondents: 20; hours per response: 9 hours; total annual burden: 180 hours).

c. Sharing of directory listings: Pursuant to section 251(b)(3), each LEC must provide directory listings to competing service providers in ''readily accessible magnetic tape or electronic formats'' upon request. A LEC must also allow competing providers to have access to and read the information in the LEC's directory assistance databases.

In the Second Order on Reconsideration, the Commission clarified that, upon request, a LEC shall provide access to its directory assistance services, including directory assistance databases, and its directory listings in any format the competing provider specifies, if the LEC's internal systems can accommodate that format.

In addition, LECs must supply updates to the requesting LEC in the same manner as the original transfer and at the same time that it provides updates to the requesting LEC in the same manner as the original transfer and at the same time that it provides updates to itself.

(No. of respondents: 500; hours per response: 36 hours; total annual burden: 18,000 hours).

d. Notification regarding format: If a LEC's internal systems do not permit it to provide directory assistance or directory listings in the format the specified by the competing provider, the LEC must inform the competing provider that the requested format cannot be accommodated and tell the requesting provider which formats can be accommodated with in 30 days of receiving the request. See 47 CFR 51.217(c)(3). In the Second Order on Reconsideration, the Commission requires LECs to inform requesting providers within 30 days when the requested format cannot be accommodated.

(No. of respondents: 500; hours per response: 24 hours; total annual burden: 12,000 hours).

e. Provision of technical information. Pursuant to sections 251(c)(2) and 251(c)(3), an ILEC shall provide to a requesting telecommunications carrier technical information about its network facilities sufficient to allow the requesting telecommunications carrier to achieve interconnection and/or access to unbundled network elements. See 47 CFR Sections 51.305(f) and 51.307(e).

(No. of respondents: 50; hours per response: 1 hour; total annual burden: 50 hours).

f. Public notice of network changes: Pursuant to section 251(c)(5), an ILEC must provide public notice of a network change that either: (1) will affect a competing service provider's performance or ability to provide service; or (2) will affect the ILEC's interoperability with other service providers. See 47 CFR 51.325—51.335

(No. of respondents: 500; hours per response: 72; total annual burden: 36,000 hours).

g. Burden of proof: Pursuant to section 251(b)(3), a LEC that provides operator services, directory assistance services or directory listings to its customers, or provides telephone numbers, shall permit competing providers of telephone exchange service or telephone toll service to have nondiscriminatory access to that service or feature, with no unreasonable dialing delays.

In disputes involving nondiscriminatory access to operator services, directory assistance services, or directory listings, a providing LEC shall bear the burden of demonstrating with specificity: (1) that it is permitting nondiscriminatory access; and (2) that any disparity in access is not caused by factors within its control. See 47 CFR 51.217.

In disputes between parties providing LECs and competing providers involving unreasonable dialing delay in the provision of access to operator services and directory assistance, the burden of proof is on the providing LEC to demonstrate with specificity that it is processing the calls of the competing provider's customers on terms equal to that of similar calls from the providing LEC's own customers. See 47 CFR 51.217.

(No. of respondents: 75; hours per response: 8 hours; total annual burden: 600 hours).

h. Submission of area code relief plans: Pursuant to Section 251(e)(1), a state commission must notify the entity or entities designated by the Commission to serve as central office code administrator(s) for its state that such state commission intends to perform matters related to initiation and development of area code relief planning efforts. See 47 CFR Section 52.19(b).

(No. of respondents: 30; hours per response: 40 hours; total annual burden: 1200 hours).

In the Notice of Proposed Rulemaking issued in the proceeding, the Commission sought comment on issues arising out of developments in, and the convergence of, directory publishing and directory assistance.

i. Subscriber List information for Internet Directories.

(No. of respondents: 2000; hours per response: 8 hours; total annual burden: 16,000 hours).

j. Provision of access to nonlocal listings.

(No. of respondents: 20; hours per response: 36 hours; total annual burden: 720 hours).

k. Listing of information to nontelephone exchange or toll service directory assistance providers.

(No. of respondents: 250; hours per response: 36 hours: total annual burden: 9000 hours).

These information collection requirements are part of an effort to make local dialing and networks, telephone numbers, operator services, directory assistance and directory listings available to all competitors on an equal basis. Obligation to comply: Mandatory.

Public reporting burden for the collection of information is as noted above. Send comments regarding the burden estimate or any other aspect of the collections of information, including suggestions for reducing the burden to Performance Evaluation and Records Management, Washington, DC 20554.

Federal Communications Commission.

Magalie Roman Salas,

Secretary.

[FR Doc. 99–29786 Filed 11–15–99; 8:45 am]

BILLING CODE 6712–01–P

FEDERAL COMMUNICATIONS COMMISSION

Notice of Public Information Collection(s) Being Submitted to OMB for Review and Approval

November 3, 1999.

SUMMARY: The Federal Communications Commissions, as part of its continuing effort to reduce paperwork burden invites the general public and other Federal agencies to take this opportunity to comment on the following information collection, as required by the Paperwork Reduction Act of 1995, Public Law 104–13. An agency may not conduct or sponsor a collection of information unless it displays a currently valid control number. No person shall be subject to any penalty for failing to comply with a collection of information subject to the Paperwork Reduction Act (PRA) that does not display a valid control number. Comments are requested concerning (a) whether the proposed collection of information is necessary for the proper performance of the functions of the Commission, including whether the information shall have practical utility; (b) the accuracy of the Commission's burden estimate; (c) ways to enhance the quality, utility, and clarity of the information collected; and (d) ways to minimize the burden of the collection of information on the respondents, including the use of automated collection techniques or other forms of information technology.

DATES: Written comments should be submitted on or before December 16, 1999. If you anticipate that you will be submitting comments, but find it difficult to do so within the period of time allowed by this notice, you should advise the contact listed below as soon as possible.

ADDRESSES: Direct all comments to Les Smith, Federal Communications Commission, Room 1–A804, 445 12th Street, S.W., Washington, DC 20554 or via the Internet to lesmith@fcc.gov.

FOR FURTHER INFORMATION CONTACT: For additional information or copies of the information collections contact Les Smith at (202) 418–0217 or via the Internet at lesmith@fcc.gov.

SUPPLEMENTARY INFORMATION:

OMB Control Number: 3060–0798.

Title: FCC Application for Wireless Telecommunications Bureau Radio Service Authorization.

Form Number: FCC 601.

Type of Review: Revision of a currently approved collection.

Respondents: Business or other for-profit entities; Not-for-profit institutions; Individuals or households; and State, Local, or Tribal Government.

Number of Respondents: 240,320.

Estimate Time Per Response: 0.5 to 1.25 hours.

Frequency of Response: On occasion reporting requirements; Third party disclosure.

Total Annual Burden: 210,280 hours.

Total Annual Costs: $48,364,400.

Needs and Uses: FCC Form 601 is used as the general application (long form) for market based licensing and site-by-site licensing in the Wireless Telecommunications Radio Services. This long form application is a consolidated application form and is utilized as part of the Universal Licensing System (ULS). Form 601 is a multi-part form comprising a main form containing administrative information and a series of schedules used to file technical information. The purpose of this revision is to make the necessary changes to convert the Private Operational and Fixed Microwave Services to the Universal Licensing System (ULS), implemented on August 30, 1999. The Commission received OMB approval for the Microwave schedule previously, however, with continuing development and implementation of ULS for Microwave service, further changes were required to this collection prior to implementation. The information is used by the Commission to determine whether the applicant is legally, technically, and financially qualified to be licensed.

Federal Communications Commission.

Magalie Roman Salas,

Secretary.

[FR Doc. 99–29782 Filed 11–15–99; 8:45 am]

BILLING CODE 6712–01–P

FEDERAL COMMUNICATIONS COMMISSION

[Report No. 2370]

Petitions for Reconsideration and Clarification of Action in Rulemaking Proceeding

November 4, 1999.

Petition for Reconsideration has been filed in the Commission's rulemaking proceeding listed in this Public Notice and published pursuant to 47 CFR Section 1.429(e). The full text of this document is available for viewing and copying in Room CY–A257, 445 12th Street, SW., Washington, DC or may be purchased from the Commission's copy contractor, ITS, Inc. (202) 857–3800. Oppositions to this petition must be filed by December 1, 1999.

See Section 1.4(b)(1) of the Commisssion's rules (47 CFR 1.4(b)(1)). Replies to an opposition must be filed within 10 days after the time for filing oppositions has expired.

Subject:

Access Charge Reform (CC Docket No. 96–262)

Price Cap Performance Review for Local Exchange Carriers (CC Docket No. 94–1)

Interexchange Carrier Purchases of Switched Access Services Offered by Competitive Local Exchange Carriers

Petition of U.S. West Communications, Inc. for Forbearance from Regulation as a Dominant Carrier in the Phoenix, Arizona MSA (CC Docket No. 98–157)

Number of Petitions Filed: 4.

Subject: Petition of U.S. West Communications, Inc., for a Declaratory Ruling Regarding the Provision of National Directory Assistance (CC Docket No. 97–172).

Number of Petitions Filed: 1.

Federal Communications Commission.

Magalie Roman Salas,

Secretary.

[FR Doc. 99–29787 Filed 11–15–99; 8:45 am]

BILLING CODE 6712–01–M

FEDERAL RESERVE SYSTEM

Notice of Proposals to Engage in Permissible Nonbanking Activities or to Acquire Companies that are Engaged in Permissible Nonbanking Activities

The companies listed in this notice have given notice under section 4 of the Bank Holding Company Act (12 U.S.C. 1843) (BHC Act) and Regulation Y (12 CFR Part 225), to engage *de novo*, or to acquire or control voting securities or assets of a company, including the companies listed below, that engages either directly or through a subsidiary or other company, in a nonbanking activity that is listed in § 225.28 of Regulation Y (12 CFR 225.28) or that the Board has determined by Order to be closely related to banking and permissible for bank holding companies. Unless otherwise noted, these activities will be conducted throughout the United States.

Each notice is available for inspection at the Federal Reserve Bank indicated. The notice also will be available for inspection at the offices of the Board of Governors. Interested persons may express their views in writing on the question whether the proposal complies with the standards of section 4 of the BHC Act.

Unless otherwise noted, comments regarding the applications must be received at the Reserve Bank indicated or the offices of the Board of Governors not later than November 30, 1999.

A. Federal Reserve Bank of New York (Betsy Buttrill White, Senior Vice President) 33 Liberty Street, New York, New York 10045-0001:

1. Bayerische Hypo-Und Vereinsbank AG, Munich, Germany; to acquire 20 percent of Babcock & Brown LP, and Babcock & Brown Operating Partnership LP, two limited partnerships being formed by Babcock & Brown Holdings Inc, and its wholly owned subsidiary, Babcock & Brown Inc, all of San Francisco, California, and thereby engage in providing lending and equity financing services, pursuant to §§ 225.28(b)(1), and (b)(2) of Regulation Y; in providing leasing services, pursuant to § 225.28(b)(3) of Regulation Y; providing financial and investment advisory services, pursuant to § 225.28(b)(6) of Regulation Y; providing securities brokerage, private placement and other agency transactional services, pursuant to § 225.28(b)(7) of Regulation Y; and in providing management consulting services, pursuant to § 225.28(b)(9)(i) of Regulation Y. These activities will be conducted worldwide.

Board of Governors of the Federal Reserve System, November 10, 1999.

Robert deV. Frierson,

Associate Secretary of the Board.

[FR Doc. 99–29911 Filed 11–15–99; 8:45 am]

BILLING CODE 6210–01–F

FEDERAL RESERVE SYSTEM

Change in Bank Control Notices; Acquisitions of Shares of Banks or Bank Holding Companies

The notificants listed below have applied under the Change in Bank Control Act (12 U.S.C. 1817(j)) and § 225.41 of the Board's Regulation Y (12 CFR 225.41) to acquire a bank or bank holding company. The factors that are considered in acting on the notices are set forth in paragraph 7 of the Act (12 U.S.C. 1817(j)(7)).

The notices are available for immediate inspection at the Federal Reserve Bank indicated. The notices also will be available for inspection at the offices of the Board of Governors. Interested persons may express their views in writing to the Reserve Bank indicated for that notice or to the offices of the Board of Governors. Comments must be received not later than November 30, 1999.

A. Federal Reserve Bank of Chicago (Philip Jackson, Applications Officer) 230 South LaSalle Street, Chicago, Illinois 60690-1413:

1. Terry Halikias, Palos Park, Illinois; to acquire control of additional voting shares of Republic Bancorp, Co., Orland Park, Illinois, and thereby indirectly acquire additional voting shares of Republic Bank of Chicago, Darian, Illinois.

Board of Governors of the Federal Reserve System, November 10, 1999.

Robert deV. Frierson,

Associate Secretary of the Board.

[FR Doc. 99–29912 Filed 11–15–99; 8:45 am]

BILLING CODE 6210–01–F

FEDERAL RESERVE SYSTEM

Formations of, Acquisitions by, and Mergers of Bank Holding Companies

The companies listed in this notice have applied to the Board for approval, pursuant to the Bank Holding Company Act of 1956 (12 U.S.C. 1841 *et seq.*) (BHC Act), Regulation Y (12 CFR Part 225), and all other applicable statutes and regulations to become a bank holding company and/or to acquire the assets or the ownership of, control of, or the power to vote shares of a bank or bank holding company and all of the

banks and nonbanking companies owned by the bank holding company, including the companies listed below.

The applications listed below, as well as other related filings required by the Board, are available for immediate inspection at the Federal Reserve Bank indicated. The application also will be available for inspection at the offices of the Board of Governors. Interested persons may express their views in writing on the standards enumerated in the BHC Act (12 U.S.C. 1842(c)). If the proposal also involves the acquisition of a nonbanking company, the review also includes whether the acquisition of the nonbanking company complies with the standards in section 4 of the BHC Act (12 U.S.C. 1843). Unless otherwise noted, nonbanking activities will be conducted throughout the United States.

Unless otherwise noted, comments regarding each of these applications must be received at the Reserve Bank indicated or the offices of the Board of Governors not later than December 10, 1999.

A. Federal Reserve Bank of Boston (Richard Walker, Community Affairs Officer) 600 Atlantic Avenue, Boston, Massachusetts 02106-2204:

1. Peoples Heritage Financial Group, Inc., Portland, Maine; to acquire 100 percent of the voting shares of, and thereby merge with Banknorth Group, Inc., Burlington, Vermont, and thereby indirectly acquire Granite Savings Bank and Trust Company, Barre, Vermont; The Howard Bank, N.A., Burlington, Vermont; First Vermont Bank and Trust Company, Brattleboro, Vermont; First Massachusetts Bank, N.A., Worcester, Massachusetts; Franklin Lamoille Bank, St. Albans, Vermont; Farmington National Bank, Farmington, New Hampshire; and Evergreen Bank, N.A., Glen Falls, New York.

In connection with this application, Applicant also has applied to acquire The Stratevest Group, N.A., Barre, Vermont, and thereby engage in trust company activities, pursuant to § 225.28(b)(5) of Regulation Y.

B. Federal Reserve Bank of Richmond (A. Linwood Gill III, Assistant Vice President) 701 East Byrd Street, Richmond, Virginia 23261-4528:

1. Chesapeake Bancorp Employee Stock Ownership Plan, Chestertown, Maryland; to become a bank holding company by acquiring 41.7 percent of the voting shares of Chesapeake Bancorp, Chestertown, Maryland, and thereby indirectly acquire Chesapeake Bank and Trust Company, Chestertown, Maryland.

C. Federal Reserve Bank of Chicago (Philip Jackson, Applications Officer) 230 South LaSalle Street, Chicago, Illinois 60690-1413:

1. Oak Financial, Inc., Madison, Wisconsin; to become a bank holding company by acquiring 100 percent of the voting shares of Oak Bank (in organization), Fitchburg, Wisconsin.

D. Federal Reserve Bank of Kansas City (D. Michael Manies, Assistant Vice President) 925 Grand Avenue, Kansas City, Missouri 64198-0001:

1. Gold Banc Corporation, Inc., and Gold Banc Acquisition Corporation XI, Inc., both of Leawood, Kansas; to acquire 100 percent of the voting shares of American Bancshares, Inc., Bradenton, Florida; and thereby indirectly acquire American Bank, Bradenton, Florida. In connection with this application, Gold Banc Acquisition Corporation XI, Inc., has applied to become a bank holding company.

2. Gold Banc Corporation, Inc., and Gold Banc Acquisition Corporation XIII, Inc., both of Leawood, Kansas; to acquire 100 percent of the voting shares of DSP Investments, Limited, La Cygne, Kansas, and thereby indirectly acquire Linn County Bank, La Cygne, Kansas. In connection with this application, Global Banc Acquisition Corporation, XIII, Inc., has applied to become a bank holding company.

E. Federal Reserve Bank of San Francisco (Maria Villanueva, Manager of Analytical Support, Consumer Regulation Group) 101 Market Street, San Francisco, California 94105-1579:

1. Wells Fargo & Company, San Francisco, California; to acquire 100 percent of the voting shares of North County BanCorp, Escondido, California, and thereby indirectly acquire North County Bank, Escondido, California.

Board of Governors of the Federal Reserve System, November 10, 1999.

Robert deV. Frierson,

Associate Secretary of the Board.

[FR Doc. 99–29913 Filed 11–15–99; 8:45 am]

BILLING CODE 6210–01–F

FEDERAL RESERVE SYSTEM

Change in Bank Control Notices; Acquisitions of Shares of Banks or Bank Holding Companies

The notificants listed below have applied under the Change in Bank Control Act (12 U.S.C. 1817(j)) and § 225.41 of the Board's Regulation Y (12 CFR 225.41) to acquire a bank or bank holding company. The factors that are considered in acting on the notices are set forth in paragraph 7 of the Act (12 U.S.C. 1817(j)(7)).

The notices are available for immediate inspection at the Federal Reserve Bank indicated. The notices also will be available for inspection at the offices of the Board of Governors. Interested persons may express their views in writing to the Reserve Bank indicated for that notice or to the offices of the Board of Governors. Comments must be received not later than November 30, 1999.

A. Federal Reserve Bank of St. Louis (Randall C. Sumner, Vice President) 411 Locust Street, St. Louis, Missouri 63102-2034:

1. Wanda F. Hill, Columbia, Kentucky; to acquire additional voting shares of Columbia Bancshares, Inc., Columbia, Kentucky, and thereby indirectly acquire additional voting shares of Bank of Columbia, Columbia, Kentucky.

B. Federal Reserve Bank of Minneapolis (JoAnne F. Lewellen, Assistant Vice President) 90 Hennepin Avenue, P.O. Box 291, Minneapolis, Minnesota 55480-0291:

1. John M. Morrison Florida Intangible Trust No. 3 with Julie Marie Morrison as trustee, Naples, Florida; to acquire additional voting shares of Central Bancshares, Inc., Golden Valley, Minnesota, and thereby indirectly aquire additional voting shares of Central Bank, Stillwater, Minnesota.

Board of Governors of the Federal Reserve System, November 9, 1999.

Robert deV. Frierson,

Associate Secretary of the Board.

[FR Doc. 99–29811 Filed 11–15–99; 8:45 am]

BILLING CODE 6210–01–F

FEDERAL RESERVE SYSTEM

Formations of, Acquisitions by, and Mergers of Bank Holding Companies

The companies listed in this notice have applied to the Board for approval, pursuant to the Bank Holding Company Act of 1956 (12 U.S.C. 1841 *et seq.*) (BHC Act), Regulation Y (12 CFR Part 225), and all other applicable statutes and regulations to become a bank holding company and/or to acquire the assets or the ownership of, control of, or the power to vote shares of a bank or bank holding company and all of the banks and nonbanking companies owned by the bank holding company, including the companies listed below.

The applications listed below, as well as other related filings required by the Board, are available for immediate inspection at the Federal Reserve Bank indicated. The application also will be available for inspection at the offices of the Board of Governors. Interested persons may express their views in writing on the standards enumerated in the BHC Act (12 U.S.C. 1842(c)). If the proposal also involves the acquisition of a nonbanking company, the review also

includes whether the acquisition of the nonbanking company complies with the standards in section 4 of the BHC Act (12 U.S.C. 1843). Unless otherwise noted, nonbanking activities will be conducted throughout the United States.

Unless otherwise noted, comments regarding each of these applications must be received at the Reserve Bank indicated or the offices of the Board of Governors not later than December 10, 1999.

A. Federal Reserve Bank of Kansas City (D. Michael Manies, Assistant Vice President) 925 Grand Avenue, Kansas City, Missouri 64198-0001:

1. Steinauer Bancorp, Steinauer, Nebraska; to become a bank holding company by acquiring 100 percent of the voting shares of Bank of Steinauer, Steinauer, Nebraska

Board of Governors of the Federal Reserve System, November 9, 1999.

Robert deV. Frierson,

Associate Secretary of the Board.

[FR Doc. 99–29812 Filed 11–15–99; 8:45 am]

BILLING CODE 6210–01–F

FEDERAL RESERVE SYSTEM

Sunshine Act Meeting

AGENCY HOLDING THE MEETING: Board of Governors of the Federal Reserve System.

TIME AND DATE: 11:00 a.m., Thursday, November 18, 1999.

PLACE: Marriner S. Eccles Federal Reserve Board Building, 20th and C Streets, N.W., Washington, D.C. 20551.

STATUS: Closed.

MATTERS TO BE CONSIDERED:

1. Proposed acquisition of frame relay and managed dial network equipment and services within the Federal Reserve System.
2. Personnel actions (appointments, promotions, assignments, reassignments, and salary actions) involving individual Federal Reserve System employees.
3. Any items carried forward from a previously announced meeting.

CONTACT PERSON FOR MORE INFORMATION: Lynn S. Fox, Assistant to the Board; 202–452–3204.

SUPPLEMENTARY INFORMATION: You may call 202–452–3206 beginning at approximately 5 p.m. two business days before the meeting for a recorded announcement of bank and bank holding company applications scheduled for the meeting; or you may contact the Board's Web site at http://www.federalreserve.gov for an electronic announcement that not only lists applications, but also indicates procedural and other information about the meeting.

Dated: November 10, 1999.

Robert deV. Frierson,

Associate Secretary of the Board.

[FR Doc. 99–29938 Filed 11–10–99; 4:41 pm]

BILLING CODE 6210–01–P

FEDERAL RESERVE BOARD

Sunshine Act Meeting

AGENCY HOLDING THE MEETING: Board of Governors of the Federal Reserve System.

TIME AND DATE: 11:00 a.m., Monday, November 22, 1999.

PLACE: Marriner S. Eccles Federal Reserve Board Building, 20th and C Streets, NW., Washington, D.C. 20551.

STATUS: Closed.

MATTERS TO BE CONSIDERED:

1. Personnel actions (appointments, promotions, assignments, reassignments, and salary actions) involving individual Federal Reserve System employees.
2. Any items carried forward from a previously announced meeting.

CONTACT PERSON FOR MORE INFORMATION: Lynn S. Fox, Assistant to the Board; 202–452–3204.

SUPPLEMENTARY INFORMATION: You may call 202–452–3206 beginning at approximately 5 p.m. two business days before the meeting for a recorded announcement of bank and bank holding company applications scheduled for the meeting; or you may contact the Board's Web site at http://www.federalreserve.gov for an electronic announcement that not only lists applications, but also indicates procedural and other information about the meeting.

Dated: November 21, 1999.

Robert deV. Frierson,

Associate Secretary of the Board.

[FR Doc. 99–30064 Filed 11–12–99; 3:49 pm]

BILLING CODE 6210–01–M

DEPARTMENT OF HEALTH AND HUMAN SERVICES

Notice of a Meeting of the National Bioethics Advisory Commission (NBAC)

SUMMARY: Pursuant to section 10(d) of the Federal Advisory Committee Act, as amended (5 U.S.C. Appendix 2), notice is given of a meeting of the National Bioethics Advisory Commission. The Commission will discuss (a) its ongoing project examining ethical issues in international research and (b) a proposed project examining issues arising from the oversight human subjects research in the United States. Some Commission members may participate by telephone conference. The meeting is open to the public and opportunities for statements by the public will be provided on December 2, 1999 from 1 pm–1:30 pm.

Dates/Times/Location

December 2, 1999—The Doubletree Inn at the Colonnade
8:30 am–5:00 pm—4 West University Parkway, Baltimore, MD 21218
December 3, 1999—Same Location as Above
8:00 am–12:00 noon

SUPPLEMENTARY INFORMATION: The President established the National Bioethics Advisory Commission (NBAC) on October 3, 1999 by Executive Order 12975 as amended. The mission of the NBAC is to advise and make recommendations to the National Science and Technology Council, its Chair, the President, and other entities on bioethical issues arising from the research on human biology and behavior, and from the applications of that research.

Public Participation

The meeting is open to the public with attendance limited by the availability of space on a first come, first serve basis. Members of the public who wish to present oral statements should contact Ms. Jody Crank by telephone, fax machine, or mail as shown below as soon as possible, at least 4 days before the meeting. The Chair will reserve time for presentations by persons requesting to speak and asks that oral statements be limited to five minutes. The order of persons wanting to make a statement will be assigned in the order in which requests are received. Individuals unable to make oral presentations can mail or fax their written comments to the NBAC staff office at least five business days prior to the meeting for distribution to the Commission and inclusion in the public record. The Commission also accepts general comments at its website at bioethics.gov. Persons needing special assistance, such as sign language interpretation or other special accommodations, should contact NBAC staff at the address or telephone number listed below as soon as possible.

FOR FURTHER INFORMATION CONTACT: Ms. Jody Crank, National Bioethics Advisory Commission, 6100 Executive Boulevard, Suite 5B01, Rockville, Maryland 20892–7508, telephone 301–402–4242, fax number 301–480–6900.

Dated: November 9, 1999.

Eric M. Meslin,

Executive Director, National Bioethics Advisory Commission.

[FR Doc. 99–29813 Filed 11–15–99; 8:45 am]

BILLING CODE 4160–17–P

DEPARTMENT OF HEALTH AND HUMAN SERVICES

Centers for Disease Control and Prevention

[60 Day–00–08]

Proposed Data Collections Submitted for Public Comment and Recommendations

In compliance with the requirement of section 3506(c)(2)(A) of the Paperwork Reduction Act of 1995, the Centers for Disease Control and Prevention is providing opportunity for public comment on proposed data collection projects. To request more information on the proposed projects or to obtain a copy of the data collection plans and instruments, call the CDC Reports Clearance Officer on (404) 639–7090.

Comments are invited on: (a) Whether the proposed collection of information is necessary for the proper performance of the functions of the agency, including whether the information shall have practical utility; (b) the accuracy of the agency's estimate of the burden of the proposed collection of information; (c) ways to enhance the quality, utility, and clarity of the information to be collected; and (d) ways to minimize the burden of the collection of information on respondents, including through the use of automated collection techniques for other forms of information technology. Send comments to Seleda Perryman, CDC Assistant Reports Clearance Officer, 1600 Clifton Road, MS–D24, Atlanta, GA 30333. Written comments should be received within 60 days of this notice.

Proposed Project

1. HIV Prevention Programs in National/Regional Minority and Other Community Based Organizational Project Reports (0920–0249)—Reinstatement—National Centers for HIV, STD, and TB Prevention (NCHSTP)—CDC funds National/Regional Minority Organizations and Community Based Organizations to conduct HIV prevention programs. This data collection approves the submission of quarterly narrative reports for HIV prevention programs developed by funded for National/Regional Minority Organizations and Community Based Organizations. These requires quarterly progress reports provided CDC with the necessary information to monitor program performance and accurately document activities that occur in these organizations funded under CDC.

Reports allow CDC to identify problems and technical assistance needs of grantees in a timely fashion and subsequently improve the effectiveness of project activities and progress toward national goals. They also assist CDC, by discerning and refining national goals and objectives in the prevention of HIV. The process of preparing quarterly reports is a valuable tool for examining program performance by assessing strengths and weaknesses in line with programmatic goals and national objectives. In addition these reports serve as technology transfer tools to identify what interventions work and can be duplicated to be used as a model for other national/regional minority and community based organizations.

The estimated annualized cost per respondent is $231.60 for national and regional minority organizations and $207.72 for community based organizations based.

Respondents	Number of respondents	Number of responses/ respondent	Avg. burden per response	Total burden hours
NRMOs	32	3	4	384
CBOs	184	3	4	2,208
Total				2,592

Dated: November 9, 1999.

Nancy Cheal,

Acting Associate Director for Policy, Planning and Evaluation, Centers for Disease Control and Prevention (CDC).

[FR Doc. 99–29820 Filed 11–15–99; 8:45 am]

BILLING CODE 4163–18–P

DEPARTMENT OF HEALTH AND HUMAN SERVICES

Centers for Disease Control and Prevention

Citizens Advisory Committee on Public Health Service Activities and Research at Department of Energy (DOE) Sites: Fernald Health Effects Subcommittee

In accordance with section 10(a)(2) of the Federal Advisory Committee Act (Pub. L. 92–463), the Agency for Toxic Substances and Disease Registry (ATSDR) and the Centers for Disease Control and Prevention (CDC) announce the following meeting.

Name: Citizens Advisory Committee on Public Health Service Activities and Research at DOE Sites: Fernald Health Effects Subcommittee.

Times and Dates: 1 p.m.–9 p.m., December 7, 1999. 8:30 a.m.–5 p.m., December 8, 1999.

Place: The Plantation, 9660 Dry Fork Road, Harrison, Ohio 45020. Telephone 513/367–5610.

Status: Open to the public, limited only by the space available. The meeting room accommodates approximately 50 people.

Background: Under a Memorandum of Understanding (MOU) signed in December 1990 with DOE and replaced by an MOU signed in 1996, the Department of Health and Human Services (HHS) was given the responsibility and resources for conducting analytic epidemiologic investigations of residents of communities in the vicinity of DOE facilities, workers at DOE facilities, and other persons potentially exposed to radiation or to potential hazards from non-nuclear energy production use. HHS delegated program responsibility to CDC.

In addition, a memo was signed in October 1990 and renewed in November 1992 between ATSDR and DOE. The MOU delineates the responsibilities and procedures for ATSDR's public health activities at DOE sites required under sections 104, 105, 107, and 120 of the Comprehensive Environmental Response, Compensation, and Liability Act (CERCLA or ''Superfund''). These activities include health consultations and public health assessments at DOE sites listed on, or proposed for, the Superfund National Priorities List and at sites that are the subject of petitions from the public; and other health-related activities such as epidemiologic studies, health surveillance, exposure and disease registries, health education, substance-specific applied research, emergency response, and preparation of toxicological profiles.

Purpose: This subcommittee is charged with providing advice and recommendations to the Director, CDC and the Administrator, ATSDR, regarding community, American Indian Tribes, and labor concerns pertaining to CDC's and ATSDR's public health activities and research at this DOE site. The purpose of this meeting is to provide a forum

for community, American Indian Tribal, and labor interaction and serve as a vehicle for community concern to be expressed as advice and recommendations to CDC and ATSDR.

Matters To Be Discussed: Agenda items include presentations from the National Institute for Occupational Safety and Health (NIOSH) and the Agency for Toxic Substances and Disease Registry (ATSDR) regarding the progress of current studies. There will also be a presentation of results from research on cancer mortality among Fernald site workers due to radiation and chemical exposure.

Agenda items are subject to change as priorities dictate.

Contact Persons for More Information: Dr. David Pedersen, Health-Related Energy Research Branch, Division of Surveillance, Hazard Evaluations and Field Studies, NIOSH, CDC, Robert A. Taft Laboratory, 4676 Columbia Parkway, M/S R–44, Cincinnati, Ohio 45226. Telephone 513/841–4400, Fax 513/841–4470.

The Director, Management Analysis and Services office has been delegated the authority to sign **Federal Register** notices pertaining to announcements of meetings and other committee management activities, for both the Centers for Disease Control and Prevention and the Agency for Toxic Substances and Disease Registry.

Dated: November 8, 1999.

Carolyn J. Russell,

Director, Management Analysis and Services Office, Centers for Disease Control and Prevention.

[FR Doc. 99–29818 Filed 11–15–99; 8:45 am]

BILLING CODE 4163–18–P

DEPARTMENT OF HEALTH AND HUMAN SERVICES

Centers for Disease Control and Prevention

Board of Scientific Counselors, National Center for Infectious Diseases: Meeting

In accordance with section 10(a)(2) of the Federal Advisory Committee Act (Pub. L. 92–463), the Centers for Disease Control and Prevention (CDC) announces the following committee meeting.

Name: Board of Scientific Counselors, National Center for Infectious Diseases (NCID).

Times and Dates: 9 a.m.–5:30 p.m., December 2, 1999. 8:30 a.m.–2:30 p.m., December 3, 1999.

Place: CDC, Auditorium B, 1600 Clifton Road, Atlanta, Georgia 30333.

Status: Open to the public, limited only by the space available.

Purpose: The Board of Scientific Counselors, NCID, provides advice and guidance to the Director, CDC, and Director, NCID, in the following areas: program goals and objectives; strategies; program organization and resources for infectious disease prevention and control; and program priorities.

Matters to be Discussed: Agenda items will include:

1. NCID Update
2. Informatics
3. Chronic Fatigue Syndrome
4. NCID Research Agenda
5. Discussions
6. Vaccine Issues:
   Rotavirus
   Yellow Fever
7. Antimicrobial Resistance
8. Emergency Preparedness—Update
9. Outbreak Investigations—Update
   Nipah virus
   West Nile virus
10. Discussions and Recommendations

Other agenda items include announcements/introductions; follow-up on actions recommended by the Board May 1999; consideration of future directions, goals, and recommendations.

Agenda items are subject to change as priorities dictate.

Written comments are welcome and should be received by the contact person listed below prior to the opening of the meeting.

Contact Person for More Information: Diane S. Holley, Office of the Director, NCID, CDC, M/S C–20, 1600 Clifton Road, NE, Atlanta, Georgia 30333, telephone 404/639–0078.

The Director, Management Analysis and Services office has been delegated the authority to sign **Federal Register** notices pertaining to announcements of meetings and other committee management activities, for both the Centers for Disease Control and Prevention and the Agency for Toxic Substances and Disease Registry.

Dated: November 8, 1999.

Carolyn J. Russell,

Director, Management Analysis and Services Office, Centers for Disease Control and Prevention.

[FR Doc. 99–29819 Filed 11–15–99; 8:45 am]

BILLING CODE 4163–18–P

DEPARTMENT OF HEALTH AND HUMAN SERVICES

Food and Drug Administration

[Docket No. 99D–4487]

Medical Devices; Draft Guidance for Conducting Stability Testing to Support an Expiration Date Labeling Claim for Medical Gloves; Availability

AGENCY: Food and Drug Administration, HHS.

ACTION: Notice.

SUMMARY: The Food and Drug Administration (FDA) is announcing the availability of the draft guidance entitled ''Guidance for Conducting Stability Testing to Support an Expiration Date Labeling Claim for Medical Gloves.'' This guidance is neither final nor is it in effect at this time. This guidance describes the information needed to support an expiration date labeling claim for powdered or powder-free, surgeon's or patient examination gloves. Expiration dating of medical gloves is voluntary at this time. FDA recommends that manufacturers, repackagers, or importers who add an expiration date labeling claim follow the enclosed recommended criteria and protocols for conducting testing described in this guidance.

DATES: Written comments concerning this draft guidance must be received by February 14, 2000.

ADDRESSES: See the **SUPPLEMENTARY INFORMATION** section for information on electronic access to the draft guidance. Submit written requests for single copies on a 3.5″ diskette of the guidance document entitled, ''Guidance for Conducting Stability Testing to Support an Expiration Date Labeling Claim for Medical Gloves'' to the Division of Small Manufacturers Assistance (HFZ–220), Center for Devices and Radiological Health, Food and Drug Administration, 1350 Piccard Dr., Rockville, MD 20850. Send two self-addressed adhesive labels to assist that office in processing your request, or fax your request to 301–443–8818. Written comments concerning this guidance must be submitted to the Dockets Management Branch, (HFA–305), Food and Drug Administration, 5630 Fishers Lane, rm. 1061, Rockville, MD 20852. Comments should be identified with the docket number found in brackets in the heading of this document.

FOR FURTHER INFORMATION CONTACT: Chiu S. Lin, Center for Devices and Radiological Health (HFZ–480), Food and Drug Administration, 9200 Corporate Blvd., Rockville, MD 20850, 301–443–8913.

SUPPLEMENTARY INFORMATION:

I. Background

It is estimated that millions of health care workers use medical gloves on a daily basis as a barrier against blood borne pathogens and microorganisms. The effective use of medical gloves as a barrier, however, is dependent upon the integrity of the glove material. Degradation of the glove material may occur when exposed to various types of manufacturing processes (e.g., chlorination) and/or environmental conditions.

In response to growing concerns regarding the use of natural rubber latex (NRL), the National Institute of Occupational Safety and Health recently issued a safety alert recommending the use of powder-free medical gloves as a means to reduce exposure to natural

rubber latex allergens through the medical glove powder. With the present shift in the medical glove market from powdered medical gloves to powder-free, the potential for a rapid increase in the demand for powder-free or nonpowdered gloves could result in products with poor barrier integrity and/or unacceptable shelf-life. Processes to remove glove powder such as chlorination have an adverse effect on various mechanical and physical glove properties, which may affect shelf-life.

Expiration dating is not currently required for patient examination or surgeon's gloves. However, FDA has just published a proposed regulation to require expiration dating for all medical gloves (64 FR 41709, July 30, 1999). Currently, if manufacturers voluntarily label their glove with an expiration date, they are expected to have real-time data to support the shelf-life labeling claim. If real-time data are not available, then a provisional shelf-life labeling claim, not to exceed a period of 2 years, may be established based on accelerated aging test data. This guidance provides recommended test methodology and protocols for both real-time and accelerated aging that the manufacturers may utilize to support an expiration date labeling claim. Additionally, manufacturers of medical gloves may utilize this guidance document to design process controls, as described in the quality system regulation, for controlling manufacturing processes, such as chlorination, to minimize adverse effects on glove barrier properties.

II. Significance of Guidance

This guidance document represents the agency's current thinking on conducting stability testing to support an expiration date labeling claim for medical gloves. It does not create or confer any rights for or on any person and does not operate to bind FDA or the public. An alternative approach may be used if such approach satisfies the applicable statute, regulations, or both.

The agency has adopted good guidance practices (GGP's), which set forth the agency's policies and procedures for the development, issuance, and use of guidance documents (62 FR 8961, February 27, 1997). This guidance document is issued as a Level 1 guidance consistent with GGP's.

III. Electronic Access

In order to receive the ''Guidance for Conducting Stability Testing to Support an Expiration Date Labeling Claim for Medical Gloves'' via your fax machine, call the CDRH Facts-On-Demand (FOD) system at 800–899–0381 or 301–827–0111 from a touch-tone telephone. At the first voice prompt press 1 to access DSMA Facts, at second voice prompt press 2, and then enter the document number (1355) followed by the pound sign (#). Then follow the remaining voice prompts to complete your request.

Persons interested in obtaining a copy of the guidance may also do so using the Internet. The Center for Devices and Radiological Health (CDRH) maintains an entry on the Internet for easy access to information including text, graphics, and files that may be downloaded to a personal computer with access to the Internet. Updated on a regular basis, the CDRH home page includes ''Guidance for Conducting Stability Testing to Support an Expiration Date Labeling Claim for Medical Gloves,'' device safety alerts, **Federal Register** reprints, information on premarket submissions (including lists of approved applications and manufacturers' addresses), small manufacturers' assistance, information on video conferencing and electronic submissions, mammography matters, and other device-oriented information. The CDRH home page may be accessed at http://www.fda.gov/cdrh. ''Guidance for Conducting Stability Testing to Support an Expiration Date Labeling Claim for Medical Gloves'' will be available at http://www.fda.gov/cdrh.

IV. Comments

Interested persons may, on or before February 14, 2000, submit to the Dockets Management Branch (address above) written comments regarding this draft guidance. Such comments will be considered when determining whether to amend the current guidance. Two copies of any comments are to be submitted, except that individuals may submit one copy. Comments are to be identified with the docket number found in brackets in the heading of this document. The guidance document and received comments may be seen in the Dockets Management Branch between 9 a.m. and 4 p.m., Monday through Friday.

Dated: October 28, 1999.

Linda S. Kahan,

Deputy Director for Regulations Policy, Center for Devices and Radiological Health.

[FR Doc. 99–29791 Filed 11–15–99; 8:45 am]

BILLING CODE 4160–01–F

DEPARTMENT OF HEALTH AND HUMAN SERVICES

Food and Drug Administration

[Docket No. 99N–0486]

Physician and Patient Labeling for Progestational Drug Products; Warnings and Contraindications

AGENCY: Food and Drug Administration, HHS.

ACTION: Notice.

SUMMARY: The Food and Drug Administration (FDA) is revoking its previously issued guidance texts for physician and patient labeling for progestational drug products that were published in the **Federal Register** of January 12, 1989 (54 FR 1243). A notice announcing FDA's intention to revoke these guidance texts was published in the **Federal Register** on April 13, 1999 (64 FR 18035). FDA received no comments on this notice. The guidance texts, which supplied physician and patient labeling for progestational drug products as a class, are no longer needed for the reasons discussed in the proposed rule on progestational drug products published in the **Federal Register** on April 13, 1999 (64 FR 17985). For additional information, see the final rule on progestational drug products that appears elsewhere in this issue of the **Federal Register**.

EFFECTIVE DATE: November 16, 2000.

FOR FURTHER INFORMATION CONTACT: Diane V. Moore, Center for Drug Evaluation and Research (HFD–580), Food and Drug Administration, 5600 Fishers Lane, Rockville, MD 20857, 301–827–4260.

Dated: November 4, 1999.

Margaret M. Dotzel,

Acting Associate Commissioner for Policy.

[FR Doc. 99–29855 Filed 11–15–99; 8:45 am]

BILLING CODE 4160–01–F

DEPARTMENT OF HEALTH AND HUMAN SERVICES

National Institute of Health

National Cancer Institute; Notice of Closed meeting

Pursuant to section 10(d) of the Federal Advisory Committee Act, as amended (5 U.S.C. Appendix 2), notice is hereby given of the following meeting.

The meeting will be closed to the public in accordance with the provisions set forth in sections 552b(c)(4) and 552b(c)(6), Title 5 U.S.C.,

as amended. The grant applications and the discussions could disclose confidential trade secrets or commercial property such as patentable material, and personal information concerning individuals associated with the grant applications, the disclosure of which would constitute a clearly unwarranted invasion of personal privacy.

Name of Committee: National Cancer Institute Initial Review Group, Subcommittee C—Basic & Preclinical.

Date: December 7–9, 1999.

Time: 7:30 pm to 12:00 pm.

Agenda: To review and evaluate grant applications.

Place: Bethesda Holiday Inn, 8120 Wisconsin Avenue, Bethesda, MD 20814.

Contact Person: Virginia P. Wray, Scientific Review Administrator, Grants Review Branch, Division of Extramural Activities, National Cancer Institute, Executive Plaza North, Room 635, 6130 Executive Boulevard MSC 7408, Rockville, MD 20892–7408, 301–496–9236, vw8z@nih.gov.

This notice is being published less than 15 days prior to the meeting due to the timing limitations imposed by the review and funding cycle.

(Catalogue of Federal Domestic Assistance Program Nos. 93.392, Cancer Construction; 93.393, Cancer Cause and Prevention Research; 93.394, Cancer Detection and Daignosis Research; 93.395, Cancer Treatment Research; 93.396, Cancer Biology Research; 93.397, Cancer Cetners Support; 93.398, Cancer Research Manpower; 93.399, Cancer Control, National Institutes of Health, HHS)

Dated: November 9, 1999.

Anna Snouffer,

Acting Director, Office of Federal Advisory Committee Policy.

[FR Doc. 99–29881 Filed 11–15–99; 8:45 am]

BILLING CODE 4140–01–M

DEPARTMENT OF HEALTH AND HUMAN SERVICES

National Institutes of Health

National Cancer Institute; Notice of closed Meeting

Pursuant to section 10(d) of the Federal Advisory Committee Act, as amended (5 U.S.C. Appendix 2), notice is hereby given of the following meeting.

The meeting will be closed to the public in accordance with the provisions set forth in sections 552b(c)(4) and 552(c)(6), Title 5 U.S.C., as amended. The grant applications and the discussions could disclose confidential trade secrets or commercial property such as patentable material, and personal information concerning individuals associated with the grant applications, the disclosure of which would constitute a clearly unwarranted invasion of personal privacy.

Name of Committee: National Cancer Institute Special Emphasis Panel, Research on State and Community Tobacco Control Interventions.

Date: December 7–8, 1999.

Time: 8 am to 5 pm.

Agenda: To review and evaluate grant applications.

Place: Double Tree Hotel, 1750 Rockville Pike, Rockville, MD 20853.

Contact Person: C.M. Erwin, Scientific Review Administrator, Special Review, Referral and Resources Branch, Division of Extra Mural Activities, National Cancer Institute, National Institutes of Health, 6130 Executive Boulevard/EPN–630, Rockville, MD 20892–7405, 301/496–7421.

This notice is being published less than 15 days prior to the meeting due to the timing limitations imposed by the review and funding cycle.

(Catalogue of Federal Domestic Assistance Program Nos. 93.392, Cancer Construction; 93.393, Cancer Cause and Prevention Research, 93.394, Cancer Detection and Diagnosis Research, 93,395, Cancer Treatment Research; 93.396, Cancer Biology Research; 93,397, Cancer Centers support; 93,398, Cancer Research Manpower; 93,399, Cancer Control, National Institutes of Health, OHS)

Dated: November 9, 1999.

Anna Snuffer,

Acting Director, Office of Federal Advisory Committee Policy.

[FR Doc. 99–29882 Filed 11–15–99; 8:45 am]

BILLING CODE 4140–01–M

DEPARTMENT OF HEALTH AND HUMAN SERVICES

National Institutes of Health

National Cancer Institute; Notice of Meeting

Pursuant to section 10(d) of the Federal Advisory Committee Act, as amended (5 U.S.C. Appendix 2), notice is hereby given of the meeting of the National Cancer Advisory Board.

The meeting will be open to the public as indicated below, with attendance limited to space available. Individuals who plan to attend and need special assistance, such as sign language interpretation or other reasonable accommodations, should notify the Contact Person listed below in advanced of the meeting.

The meeting will be closed to the public in accordance with the provisions set forth in sections 552b(c)(6) and 552b(c)(9), Title 5 U.S.C., as amended. The discussions could disclose confidential trade secrets or commercial property such as patentable material, and personal information concerning individuals associated with the NCI Intramural program and/or its contractors, the disclosure of which would constitute a clearly unwarranted invasion of personal privacy, and the premature disclosure of discussions related to personnel and programmic issues would be likely to significantly frustrate the subsequent implementation of recommendations.

Name of Committee: National Cancer Advisory Board.

Dates: December 6–8, 1999.

Name of Committee: National Cancer Advisory Board, Subcommittee on Cancer Centers.

Open: December 6, 8:00 p.m.–Recess.

Agenda: To discuss program and policy issues related to the Cancer Centers.

Place: The Hyatt Regency Hotel, One Bethesda Metro Center, Bethesda, MD 20892.

Contact Person: Marvin R. Kalt, Executive Secretary. National Cancer Institute, NIH, Executive Plaza North, Room 600, 6130 Executive Blvd., MSC 7405, Bethesda, MD 20892–7405, (301) 496–5147.

Name of Committee: National Cancer Advisory Board.

Dates: December 7–8, 1999.

Open: December 7, 9:00 a.m. to 4:00 p.m.; December 8, 9:00 a.m. to 1:00 p.m.

Agenda: Report of the Director, NCI: Overview of Board of Scientific Advisors activities; Intramural and Extramural Program Overviews and Updates; Presentations by various NCI working groups on current and proposed program activities, projects and initiatives; other NCAB business. For detailed agenda: See NCI Homepage/Advisory Board and Groups http://deainfor.nci.nih.gov/ADVISORY/boards.htm. Tentative agenda available 10 working days prior to meetings; Final agenda available 5 working days prior to meetings.

Closed: December 7, 4:00 p.m. to Recess.

Agenda: To review and evaluate Intramural site visits; Discussion of proprietary, programmatic and personnel issues. Review and discussion of Extramural proprietary, programmatic and personnel issues.

Place: Building 31C, Conference Room 10, National Institutes of Health, 3100 Center Drive, Bethesda, MD 20892.

Contact Person: Marvin R. Kalt, Executive Secretary, National Cancer Institute, National Institutes of Health, Executive Plaza North, Suite 600, 6130 Executive Boulevard, Rockville, MD 20892, (301) 496–5147.

This notice is being published less than 15 days prior to the meeting due to the timing limitations imposed by the review and funding cycle.

(Catalogue of Federal Domestic Assistance Program Nos. 93.392, Cancer Construction; 93.393, Cancer Cause and Prevention Research; 93.394, Cancer Detection and Diagnosis Research; 93.395, Cancer Treatment Research; 93.396, Cancer Biology Research; 93.397, Cancer Centers Support; 93.398, Cancer Research Manpower; 93.399, Cancer Control, National Institutes of Health, HHS)

Dated: November 9, 1999.

Anna Snouffer,

Acting Director, Office of Federal Advisory Policy, NIH.

[FR Doc. 99–29883 Filed 11–15–99; 8:45 am]

BILLING CODE 4140–01–M

DEPARTMENT OF HEALTH AND HUMAN SERVICES

National Institutes of Health

National Cancer Institute; Notice of Closed Meeting

Pursuant to section 10(d) of the Federal Advisory Committee Act, as amended (5 U.S.C. Appendix 2), notice is hereby given of the following meeting.

The meeting will be closed to the public in accordance with the provisions set forth in sections 552b(c)(4) and 552b(c)(6), Title 5 U.S.C. as amended. The grant applications and the discussions could disclose confidential trade secrets or commercial property such as patentable material, and personal information concerning individuals associated with the grant applications, the disclosure of which would constitute a clearly unwarranted invasion of personal privacy.

Name of Committee: National Cancer Institute Special Emphasis Panel, Cooperative Prostate Cancer Tissue Resource.

Date: December 3, 1999.

Time: 8:00 am to 2:00 pm.

Agenda: To review and evaluate grant applications.

Place: 6130 Executive Blvd., Room 635, Rockville, MD 29852.

Contact Person: Timothy C. Meeker, Scientific Review Administrator, National Cancer Institute, Division of Extramural Activities, Special Referral and Resources Branch, 6130 Executive Boulevard, EPN–630, Rockville, MD 20852.

This notice is being published less than 15 days prior to the meeting due to the timing limitations imposed by the review and funding cycle.

(Catalogue of Federal Domestic Assistance Program Nos. 93.392, Cancer Construction; 93.393; Cancer Cause and Prevention Research; 93.394, Cancer Detection and Diagnosis Research; 93.395; Cancer Treatment Research; 93.396, Cancer Biology Research; 93.397, Cancer Centers Support; 93.398, Cancer Research Manpower; 93.399, Cancer Control, National Institutes of Health, HHS)

Dated: November 9, 1999.

Anna Snouffer,

Acting Director, Office of Federal Advisory Committee Policy.

[FR Doc. 99–29884 Filed 11–15–99; 8:45 am]

BILLING CODE 4140–01–M

DEPARTMENT OF HEALTH AND HUMAN SERVICES

National Institutes of Health

National Cancer Institute; Notice of Closed Meeting

Pursuant to section 10(d) of the Federal Advisory Committee Act, as amended (5 U.S.C. Appendix 2), notice is hereby given of the following meeting.

The meeting will be closed to the public in accordance with the provisions set forth in sections 552b(c)(4) and 552b(c)(6), Title 5 U.S.C., as amended. The grant applications and the discussions could disclose confidential trade secrets or commercial property such as patentable material, and personal information concerning individuals associated with the grant applications, the disclosure of which would constitute a clearly unwarranted invasion of personal privacy.

Name of Committee: National Cancer Institute Initial Review Group, Subcommittee H—Clinical Groups.

Date: December 1–2, 1999.

Time: 7:30 a.m. to 5:00 p.m.

Agenda: To review and evaluate grant applications.

Place: Hyatt Regency Bethesda Hotel, One Bethesda Metro Center, Bethesda, MD 20814.

Contact Person: Deborah R. Jaffe, Scientific Review Administrator, Grants Review Branch, Division of Extramural Activities, National Cancer Institute, National Institutes of Health, Bethesda, MD 20892.

This notice is being published less than 15 days prior to the meeting due to the timing limitations imposed by the review and funding cycle.

(Catalogue of Federal Domestic Assistance Program Nos. 93.392, Cancer Construction; 93.393, Cancer Cause and Prevention Research; 93.394, Cancer Detection and Diagnosis Research; 93.395, Cancer Treatment Research; 93.396, Cancer Biology Research; 93.397, Cancer Centers Support; 93.398, Cancer Research Manpower; 93.399, Cancer Control, National Institutes of Health, HHS)

Dated: November 9, 1999.

Anna Snouffer,

Acting Director, Office of Federal Advisory Committee Policy.

[FR Doc. 99–29885 Filed 11–15–99; 8:45 am]

BILLING CODE 4140–01–M

DEPARTMENT OF HEALTH AND HUMAN SERVICES

National Institutes of Health

National Center for Research Resources; Notice of Closed Meeting

Pursuant to section 10(d) of the Federal Advisory Committee Act, as amended (5 U.S.C. Appendix 2), notice is hereby given of the following meeting.

The meeting will be closed to the public in accordance with the provisions set forth in sections 552b(c)(4) and 552b(c)(6), Title 5 U.S.C., as amended. The grant applications and the discussions could disclose confidential trade secrets or commercial property such as patentable material, and personal information concerning individuals associated with the grant applications, the disclosure of which would constitute a clearly unwarranted invasion of personal privacy.

Name of Committee: National Center for Research Resources Special Emphasis Panel, Comparative Medicine.

Date: December 14, 1999.

Time: 2:30 pm to 3:30 pm.

Agenda: To review and evaluate grant applications.

Place: 6705 Rockledge Drive, Suite 6018, Bethesda, MD 20892 (Telephone Conference Call).

Contact Person: D.G. Patel, Scientific Review Administrator, Office of Review, National Center for Research Resources, National Institutes of Health, Bethesda, MD 20892, 301–435–0824.

(Catalogue of Federal Domestic Assistance Program Nos. 93.306, Comparative Medicine, 93.306; 93.333, Clinical Research, 93.333; 93.371, Biomedical Technology; 93.389, Research Infrastructure, National Institutes of Health, HHS)

Dated: November 8, 1999.

Anna Snouffer,

Acting Director, Office of Federal Advisory Committee Policy.

[FR Doc. 99–29798 Filed 11–15–99; 8:45 am]

BILLING CODE 4140–01–M

DEPARTMENT OF HEALTH AND HUMAN SERVICES

National Institutes of Health

National Center for Complementary and Alternative Medicine; Notice of Closed Meeting

Pursuant to section 10(d) of the Federal Advisory Committee Act, as amended (5 U.S.C. Appendix 2), notice is hereby given of the following meeting.

The meeting will be closed to the public in accordance with the provisions set forth in section 552b(c)(4) and 552b(c)(6), Title 5 U.S.C., as amended. The contract proposals and the discussions could disclose confidential trade secrets or commerical property such as patentable material, and personal information concerning individuals associated with the contract proposals, the disclosure of which

would constitute a clearly unwarranted invasion of personal privacy.

Name of Committee: National Center for Complementary and Alternative Medicine Special Emphasis Panel.

Date: November 22, 1999.

Time: 2:00 pm to 3:00 pm.

Agenda: to review and evaluate contract proposals.

Place: 9000 Rockville Pike, Bldg 31, Room 5B50, Bethesda, MD 20892 (Telephone Conference Call).

Contact Person: Eugene G. Hayunga, Scientific Review Administrator, National Institutes of Health, NCCAM, Building 31, Room 5B50, 9000 Rockville Pike, Bethesda, MD 20892, 301-594-2014, hayungae@od.nih.gov.

This notice is being published less than 15 days prior to the meeting due to the timing limitations imposed by the review and funding cycle.

Dated: November 9, 1999.

Anna Snouffer,

Acting Director, Office of Federal Advisory Committee Policy.

[FR Doc. 99–29886 Filed 11–15–99; 8:45 am]

BILLING CODE 4140–01–M

DEPARTMENT OF HEALTH AND HUMAN SERVICES

National Institutes of Health

National Eye Institute; Notice of Meeting

Pursuant to section 10(d) of the Federal Advisory Committee Act, as amended (5 U.S.C. Appendix 2), notice is hereby given of a meeting of the Board of Scientific Counselors, National Eye Institute.

The meeting will be open to the public as indicated below, with attendance limited to space available. Individuals who plans to attend and need special assistance, such as sign language interpretation or other reasonable accommodations, should notify the Contact Person listed below in advance of the meeting.

The meeting will be closed to the public as indicated below in accordance with the provisions set forth in section 552b(c)(6), Title 5 U.S.C., as amended for the review, discussion, and evaluation of individual intramural programs and projects conducted by the National Eye Institute, including consideration of personnel qualifications and performance, and the competence of individual investigators, the disclosure of which would constitute a clearly unwarranted invasion of personal privacy.

Name of Committee: Board of Scientific Counselors, National Eye Institute.

Date: December 6–7, 1999.

Open: December 6, 1999, 9 a.m. to 10 a.m.

Agenda: Opening remarks by the Director, Intramural Research Program, on matters concerning the intramural program of the NEI.

Place: Building 10, Room 10B16, Bethesda, MD 20892.

Closed: December 6, 1999, 10 a.m. to 5 p.m.

Ageanda: To review and evaluate personal qualifications and performance, and competence of individual investigators.

Place: Building 10, Room 10B16, Bethesda, MD 20892.

Closed: December 7, 1999, 9 a.m. to 5 p.m.

Agenda: To review and evaluate personal qualifications and performance, and competence of individual investigators.

Place: Building 10, Room 10B16, Bethesda, MD 20892.

Contact Person: Robert B. Nussenblatt, Director, Intramural Research Program, National Eye Institute, National Institutes of Health, PHS, DHHS, Bethesda, MD 20892, 301–496–3123.

(Catalogue of Federal Domestic Assistance Program Nos. 93.867, Vision Research, National Institutes of Health, HHS)

Dated: November 8, 1999.

Anna Snouffer,

Acting Director, Office of Federal Advisory Committee Policy.

[FR Doc. 99–29797 Filed 11–15–99; 8:45 am]

BILLING CODE 4140–01–M

DEPARTMENT OF HEALTH AND HUMAN SERVICES

National Institutes of Health

National Institute of Allergy and Infectious Diseases; Notice of Closed Meeting

Pursuant to section 10(d) of the Federal Advisory Committee Act, as amended (5 U.S.C. Appendix 2), notice is hereby given of the following meeting.

The meeting will be closed to the public in accordance with the provisions set forth in sections 552(c)(4) and 552b(c)(6), Title 5 U.S.C., as amended. The contract proposals and the discussions could disclose confidential trade secrets or commercial property such as patentable materials, and personal information concerning individuals associated with the contract proposals, the disclosure of which would constitute a clearly unwarranted invasion of personal privacy.

Name of Committee: National Institute of Allergy and Infectious Diseases Special Emphasis Panel, Technical Evaluation Group.

Date: November 18, 1999.

Time: 10 AM to 3:30 PM.

Agenda: To review and evaluate contract proposals.

Place: Holiday Inn Bethesda, Pennsylvania Room, 8120 Wisconsin Avenue, Bethesda, MD 20892.

Contact Person: Ken Wasserman, Scientific Review Administrator, Scientific Review Program, Division of Extramural Activities, NIAID, NIH, Room 2217, 6700–B Rockledge Drive, MSC 7610, Bethesda, MD 301 496–2550, kw159p@nih.gov.

This notice is being published less than 15 days prior to the meeting due to the time in limitations imposed by the review and funding cycle.

(Catalogue of Federal Domestic Assistance Program Nos. 93.855, Allergy, Immunology, and Transplantation Research; 93.856, Microbiology and Infectious Diseases Research, National Institutes of Health, HHS)

Dated: November 8, 1999.

Anna Snouffer,

Acting Director, Office of Federal Advisory Committee Policy.

[FR Doc. 99–29799 Filed 11–15–99; 8:45 am]

BILLING CODE 4140–01–M

DEPARTMENT OF HEALTH AND HUMAN SERVICES

National Institutes of Health

Center for Scientific Review; Notice of Closed Meetings

Pursuant to section 10(d) of the Federal Advisory Committee, as amended (5 U.S.C. Appendix 2), notice is hereby given of the following meetings.

The meetings will be closed to the public in accordance with the provisions set forth in sections 552b(c)(4) and 552b(c)(6), Title 5 U.S.C., as amended. The grant applications and the discussions could disclose confidential trade secrets or commercial property such as patentable material, and personal information concerning individuals associated with the grant applications, the disclosure of which would constitute a clearly unwarranted invasion of personal privacy.

Name of Committee: Center for Scientific Review Special Emphasis Panel.

Date: November 18, 1999.

Time: 10:45 am to 12:00 pm.

Agenda: To review and evaluate grant applications.

Place: NIH, Rockledge 2, Bethesda, MD 20892 (Telephone Conference Call).

Contact Person: Victoria S. Levin, MSW, Scientific Review Administrator, Center for Scientific Review, National Institutes of Health, 6701 Rockledge Drive, Room 3172, MSC 7848, Bethesda, MD 20892, (301) 435–0912, levinv@sr.nih.gov.

This notice is being published less than 15 days prior to the meeting due to the timing limitations imposed by the review and funding cycle.

Name of Committee: Center for Scientific Review Special Emphasis Panel.

Date: November 22, 1999.

Time: 3:00 pm to 4:30 pm.

Agenda: To review and evaluate grant applications.

Place: NIH, Rockledge 2, Bethesda, MD 20892 (Telephone Conference Call).

Contact Person: Victoria S. Levin, MSW, Scientific Review Administrator, Center for Scientific Review, National Institutes of Health, 6701 Rockledge Drive, Room 3172, MSC 7848, Bethesda, MD 20892, (301) 435–0912, levinv@sr.nih.gov.

This notice is being published less than 15 days prior to the meeting due to the timing limitations imposed by the review and funding cycle.

(Catalogue of Federal Domestic Assistance Program Nos. 93.306, Comparative Medicine, 93.306; 93.333, Clinical Research, 93.333, 93.337, 93.393–93.396, 93.837–93.844, 93.846–93.878, 93.892, 93.893, National Institutes of Health, HHS)

Dated: November 9, 1999.

Anna Snouffer,

Acting Director, Office of Federal Advisory Committee Policy.

[FR Doc. 99–29879 Filed 11–15–99; 8:45 am]

BILLING CODE 4110–01–M

DEPARTMENT OF HEALTH AND HUMAN SERVICES

National Institutes of Health

Center for Scientific Review; Notice of Closed Meetings

Pursuant to section 10(d) of the Federal Advisory Committee Act, as amended (5 U.S.C. Appendix 2), notice is hereby given of the following meetings.

The meetings will be closed to the public in accordance with the provisions set forth in sections 552b(c)(4) and 552b(c)(6), Title 5 U.S.C., as amended. The grant applications and the discussions could disclose confidential trade secrets or commercial property such as patentable material, and personal information concerning individuals associated with the grant applications, the disclosure of which would constitute a clearly unwarranted invasion of personal privacy.

Name of Committee: Center for Scientific Review Special Emphasis Panel. ZRG1 IFCN–8 (03) M.

Date: December 2, 1999.

Time: 11:00 am to 1:00 pm.

Agenda: To review and evaluate grant applications.

Place: NIH, Rockledge 2, Bethesda, MD 20892 (Telephone Conference Call).

Contact Person: Samuel Rawlings, Scientific Review Administrator, Center for Scientific Review, National Institutes of Health, 6701 Rockledge Drive, Room 5160, MSC 7844, Bethesda, MD 20892, (301) 435–1243.

Name of Committee: Center for Scientific Review Special Emphasis Panel.

Date: December 3, 1999.

Time: 2:00 pm to 3:00 pm.

Agenda: To review and evaluate grant applications.

Place: NIH, Rockledge 2, Bethesda, MD 20892 (Telephone Conference Call).

Contact Person: Mohindar Poonian, Scientific Review Administrator, Center for Scientific Review, National Institutes of Health, 6701 Rockledge Drive, Room 5222, MSC 7852, Bethesda, MD 20892, (301) 435–1168, poonianm@csr.nih.gov.

Name of Committee: Center for Scientific Review Special Emphasis Panel.

Date: December 3, 1999.

Time: 2:00 pm to 4:30 pm.

Agenda: To review and evaluate grant applications.

Place: NIH, Rockledge 2, Bethesda, MD 20892 (Telephone Conference Call).

Contact Person: Patricia H. Hand, Scientific Review Administrator, Center for Scientific Review, National Institutes of Health, 6701 Rockledge Drive, Room 4140, MSC 7804, Bethesda, MD 20892, (301) 435–1767, handp@csr.nih.gov.

Name of Committee: Center for Scientific Review Special Emphasis Panel.

Date: December 6, 1999.

Time: 1:00 pm to 3:00 pm.

Agenda: To review and evaluate grant applications.

Place: NIH, Rockledge 2, Bethesda, MD 20892 (Telephone Conference Call).

Contact Person: Ronald Dubois, Scientific Review Administrator, Center for Scientific Review, National Institutes of Health, 6701 Rockledge Drive, Room 4156, MSC 7806, Bethesda, MD 20892, (301) 435–1722, duboisr@drg.nih.gov.

Name of Committee: Center for Scientific Review Special Emphasis Panel.

Date: December 6, 1999.

Time: 1:00 pm to 3:30 pm.

Agenda: To review and evaluate grant applications.

Place: NIH, Rockledge 2, Bethesda, MD 20892 (Telephone Conference Call).

Contact Person: Michael A. Land, Scientific Review Administrator, Center for Scientific Review, National Institutes of Health, 6701 Rockledge Drive, Room 5210, MSC 7850, Bethesda, MD 20892, (301) 435–1265.

Name of Committee: Center for Scientific Review Special Emphasis Panel.

Date: December 6, 1999.

Time: 2:00 pm to 4:00 pm.

Agenda: To review and evaluate grant applications.

Place: NIH, Rockledge 2, Bethesda, MD 20892 (Telephone Conference Call).

Contact Person: Sami A. Mayyasi, Scientific Review Administrator, Center for Scientific Review, National Institutes of Health, 6701 Rockledge Drive, Room 5122, MSC 7852, Bethesda, MD 20892, (301) 435–1169.

Name of Committee: Center for Scientific Review Special Emphasis Panel.

Date: December 7, 1999.

Time: 8:30 am to 5:00 pm.

Agenda: To review and evaluate grant applications.

Place: Radisson Barcelo Hotel, 2121 P St., NW, Washington, DC 20037.

Contact Person: Joanne T. Fujii, Scientific Review Administrator, Center for Scientific Review, National Institutes of Health, 6701 Rockledge Drive, Room 5218, Bethesda, MD 20892, (301) 435–1178, fjiij@drg.nih.gov.

Name of Committee: Center for Scientific Review Special Emphasis Panel.

Date: December 7, 1999.

Time: 8:30 am to 5:00 pm.

Agenda: To review and evaluate grant applications.

Place: Radisson Barcelo Hotel, 2121 P St., NW, Washington, DC 20037.

Contact Person: Michael Nunn, Scientific Review Administrator, Center for Scientific Review, National Institutes of Health, 6701 Rockledge Drive, Room 5202, MSC 7850, Bethesda, MD 20892, (301) 435–0910.

Name of Committee: Center for Scientific Review Special Emphasis Panel.

Date: December 7, 1999.

Time: 1:00 am to 2:30 pm.

Agenda: To review and evaluate grant applications.

Place: NIH, Rockledge 2, Bethesda, MD 20892, (Telephone Conference Call).

Contact Person: Christine Melchior, Scientific Review Administrator, Center for Scientific Review, National Institutes of Health, 6701 Rockledge Drive, Room 4102, MSC 7816, Bethesda, MD 20892, (301) 435–1713.

Name of Committee: Center for Scientific Review Special Emphasis Panel, ZRG1–CVA–03.

Date: December 7, 1999.

Time: 1:30 am to 3:00 pm.

Agenda: To review and evaluate grant applications.

Place: NIH, Rockledge 2, Bethesda, MD 20892, (Telephone Conference Call).

Contact Person: Gordon L. Johnson, Scientific Review Administrator, Center for Scientific Review, National Institutes of Health, 6701 Rockledge Drive, Room 4136, MSC 7802, Bethesda, MD 20892, (301) 435–1212.

(Catalogue of Federal Domestic Assistance Program Nos. 93.306, Comparative Medicine, 93.036; 93.333, Clinical Research, 93.333, 93.337, 93.393–93.396, 93.837–93.844, 93.846–93.878, 93.892, 93.893, National Institutes of Health, HHS)

Dated: November 9, 1999.

Anna Snouffer,

Acting Director, Office of Federal Advisory Committee Policy.

[FR Doc. 99–29880 Filed 11–15–99; 8:45 am]

BILLING CODE 4140–01–M

DEPARTMENT OF THE INTERIOR

Fish and Wildlife Service

Notice of Intent To Prepare a Supplemental Environmental Impact Statement To Evaluate Continued Sea Lamprey Control in Lake Champlain

AGENCY: Fish and Wildlife Service, Interior; New York State Department of

Environmental Conservation; Vermont Fish and Wildlife Department.

ACTION: Notice of Intent to Prepare a Supplemental Environmental Impact Statement.

SUMMARY: The U.S. Fish and Wildlife Service (FWS) in cooperation with the Vermont Department of Fish and Wildlife (VTDFW) and the New York State Department of Environmental Conservation (NYSDEC) announces its intention to prepare a Supplemental Environmental Impact Statement (SEIS) pursuant to Sec. 102(2)(c) of the National Environmental Policy Act (NEPA) of 1969, in accordance with the Council on Environmental Quality regulations for implementing NEPA (40 CFR Parts 1500–1508). This SEIS will evaluate a proposal to continue sea lamprey control in Lake Champlain, to maintain reduced levels of sea lamprey and achieve further reductions. FWS invites other Federal agencies, states, Indian tribes, local governments, and the general public to submit written comments or suggestions concerning the scope of the issues to be addressed, alternatives to be analyzed, and the environmental impacts to be addressed in the Draft Supplemental Environmental Impact Statement (DSEIS). The public is invited to participate in scoping activities by submitting written comments or attending one or more public scoping hearings through which comments and suggestions will be received. Oral and written comments will be considered equally in preparation of the DSEIS. Those not desiring to submit comments or suggestions at this time, but who would like to receive a copy of the DSEIS for review, should send a request to Mr. Dave Tilton at the address given below. A notice of public hearings with the locations, dates, and times will be published in the **Federal Register** and in local news media.

DATES: Written comments related to the scope and content of the DSEIS should be submitted to FWS by February 4, 2000 to the address below.

ADDRESSES: Written comments and requests to be included on a mailing list of persons interested in receiving the DSEIS should be sent to Mr. Dave Tilton, Project Leader, U.S. Fish and Wildlife Service, Lake Champlain Office, 11 Lincoln Street, Essex Junction, Vermont 05452. Alternatively, comments may be submitted electronically to the following address: dave__tilton@fws.gov.

FOR FURTHER INFORMATION CONTACT: Mr. Dave Tilton, Project Leader, USFWS Lake Champlain Office, 111 Lincoln Street, Essex Junction, Vermont 05452, 802–951–6313, FAX: 802–951–6315. New York contact person is Mr. Larry Nashett, Supervising Aquatic Biologist, New York Department of Environmental Conservation, Region 5, P.O. Box 296, Ray Brook, New York 12977, 518–897–1333. Vermont contact person is Mr. Tim Hess, Director of Fisheries, Vermont Department of Fish and Wildlife, 103 South Main Street, Waterbury, Vermont 05671, 802–241–3700.

SUPPLEMENTARY INFORMATION:

Background

Sea lamprey are primitive marine invaders to Lake Champlain. They are parasitic fish that feed on the body fluids of other fish resulting in reduced growth and often the death of host fish. A substantial body of information collected on Lake Champlain indicates sea lamprey have a profound negative impact upon the lake's fishery resources and have suppressed efforts to establish new and historical sportfisheries. In 1990, the FWS, NYSDEC, and VTDFW initiated an eight-year experimental sea lamprey control program for Lake Champlain. The experimental program treated tributaries and deltas of Lake Champlain with the chemical lampricides TFM and Bayer 73, which substantially reduced larval sea lamprey numbers in treated waters. The program included monitoring and assessment of the effects of sea lamprey reduction on the characteristics of certain fish populations, the sport fishery and the area's growth and economy. A set of thirty evaluation standards were established. Overall, the experimental sea lamprey control program met or exceeded the majority of the standards. In addition to this evaluation, the cooperating agencies assessed the effects of the program on nontarget organisms.

Two rounds of treatments were planned for each significantly infested stream and delta. From 1990 through 1996 twenty-four TFM treatments were conducted on fourteen Lake Champlain tributaries, and 9 Bayer 73 (5% granular) treatments were conducted on 5 deltas. A cumulative total of approximately 141 miles and 1220 delta acres were treated.

In summary, trap catches of spawning-phase sea lamprey declined by 80–90%; nest counts were reduced by 57%. Sixteen of twenty-two TFM treatments reduced ammocoetes at index stations to less than 10% of pre-treatment levels. 8 of the 9 Bayer treatments resulted in mean mortality rates over 85% among caged ammocoetes. Relatively small number of nontarget amphibian and fish species were killed. Adverse effects on nontarget species were higher for Bayer treatments than TFM. Native mussels, snails and some other macroinvertebrates were significantly affected after the 1991 Bayer 73 treatments of the Ausable and Little Ausable deltas in New York. However, they recovered to pre-treatment levels within 4 years. American brook lamprey also experienced substantial treatment-related mortality. Yet, the finding of dead American brook lamprey in second-round treatments in each stream where they were negatively affected during the first-round suggested survival or immigration was adequate to maintain their populations. Wounding rates on lake trout and landlocked Atlantic salmon were reduced in the main lake basin, and catches of both species increased. A significant increase in survival of 3–4 year lake trout was noted; survival of older fish improved but did not change significantly. Returns of Atlantic salmon to tributaries increased significantly after treatment. Changes in wounding rates on brown and rainbow trout could not be evaluated, but angler catches increased since 1990. Catch per unit effort of rainbow smelt, the major forage species for salmonids, decreased significantly at one of two sampling stations in the main lake basin and in Malletts Bay, but not at other locations; length-at-age also decreased at most sites. Evaluation of angler responses to the program indicated a favorable 3.5:1 economic benefit:cost ratio.

A Comprehensive Evaluation of an Eight Year Program of Sea Lamprey Control in Lake Champlain provides a detailed description of the results of the project. It is available on the FWS web-site at. [www.fws.gov/r51cfwro/lamprey/lamprey.html.], or from any of the contacts for further information listed above.

Decision To Be Made

The responsible officials in the FWS, NYSDEC, and VTDFW must decide whether to continue sea lamprey control for Lake Champlain. In addition, if sea lamprey control will continue, the agencies must also consider the following:

(1) Should the following list be established as the long term program objectives?

(a) Maintain reduced levels of sea lamprey on Main Lake and South Lake portions of Lake Champlain and achieve further Main Lake-South Lake reductions by targeting new areas where sea lamprey infestations are found.

(b) Augment sea lamprey control activities in Mallets Bay and Inland Sea

areas of Lake Champlain and reduce sea lamprey population levels and associated impacts there.

(c) Employ an integrated approach to continuing sea lamprey control using lampricides and nonchemical means.

(2) What mitigation and monitoring measures are required for sound resource management?

(3) Is sea lamprey control in the best interest for the resource and citizens of the states of New York and Vermont?

The Final Environmental Impact Statement and Record of Decision is expected to be released by April, 2001. The Responsible Officials will make a decision regarding this proposal after considering public comments, and the environmental consequences displayed in the Final Supplemental Environmental Impact Statement, applicable laws, regulations, and policies. The decision and supporting reason will be documented in the Record of Decision.

Dated November 3, 1999.

Ronald E. Lambertson,

Regional Director.

[FR Doc. 99–29790 Filed 11–15–99; 8:45 am]

BILLING CODE 4310–55–M

DEPARTMENT OF THE INTERIOR

Fish and Wildlife Service

Aquatic Nuisance Species Task Force Meeting

AGENCY: Fish and Wildlife Service, Interior.

ACTION: Notice of meeting.

SUMMARY: This notice announces a meeting of the Aquatic Nuisance Species Task Force. The meeting topics are identified in the **SUPPLEMENTARY INFORMATION**.

DATES: The Aquatic Nuisance Species Task Force will meet from 8:30 a.m. to 5 p.m., Wednesday, December 1, 1999 and 8:30 a.m. to 12 p.m., Thursday, December 2, 1999.

ADDRESSES: The meeting will be held at the U.S. Fish and Wildlife Service office, 4401 North Fairfax Drive, Room 200 AB, Arlington, Virginia.

FOR FURTHER INFORMATION CONTACT: Sharon Gross, Executive Secretary, Aquatic Nuisance Species Task Force at 703–358–2308 or by e-mail at: sharon__gross@fws.gov.

SUPPLEMENTARY INFORMATION: Pursuant to section 10(a)(2) of the Federal Advisory Committee Act (5 U.S.C. App. I), this notice announces a meeting of the Aquatic Nuisance Species Task Force. The Task Force was established by the Nonindigenous Aquatic Nuisance Prevention and Control Act of 1990.

Topics to be addressed during the meeting include briefings about regional nonindigenous species problems and initiatives, a discussion on the establishment of additional regional panels, action on the approval of the Iowa State Management Plan, updates from several ANS Task Force committees including the regional panels, and other issues.

Minutes of the meeting will be maintained by the Executive Secretary, Aquatic Nuisance Species Task Force, Suite 851, 4401 North Fairfax Dive, Arlington, Virginia 22203–1622, and will be available for public inspection during regular business hours, Monday through Friday.

Dated: November 9, 1999.

Cathleen I. Short,

Co-Chair, Aquatic Nuisance Species Task Force, Assistant Director—Fisheries.

[FR Doc. 99–29795 Filed 11–15–99; 8:45 am]

BILLING CODE 4310–55–M

DEPARTMENT OF THE INTERIOR

Fish and Wildlife Service

United States Coral Reef Task Force: Options for the United States To Consider To Promote the Conservation of Coral Reefs; Public Meeting

AGENCY: U.S. Fish and Wildlife Service, Interior.

ACTION: Notice of public meeting.

SUMMARY: On behalf of the United States Coral Reef Task Force, we, the U.S. Fish and Wildlife Service, announce a public meeting to discuss the trade in non-food fish coral reef species, the effects of this trade on coral reefs, and measures which the United States should consider to minimize these effects and promote coral reef conservation. Representatives of other agencies involved in the Trade Subgroup will participate in the meeting to answer questions and receive public comments on potential conservation actions.

DATES: The public meeting will be held on Monday, December 6 from 2:00 to 5:00 pm.

ADDRESSES: The public meeting will be held in Room 7000A and B, Department of the Interior, 1849 C Street, N.W., Washington, DC.

FOR FURTHER INFORMATION CONTACT: Sheila Einsweiler, U.S. Fish and Wildlife Service, Office of Law Enforcement, telephone (703) 358–1949, fax (703) 358–2271, E-mail: Sheila__Einsweiler@fws.gov.

SUPPLEMENTARY INFORMATION:

Background

We request that anyone that wishes to speak at this public meeting contact us using the contact information above so that we can ensure that everyone is given enough time to express their opinions. We request that everyone who speaks at this meeting also give us their comments in writing. If you are unable to attend the meeting but still wish to comment, you may submit your comments by any one of several methods. You may mail comments to the following address: U.S. Fish and Wildlife Service, Office of the Assistant Director for International Affairs, 1849 C Street, Room 3245, Washington, DC 20240. You may comment via the Internet to r9oma__cites@fws.gov. Please submit Internet comments as an ASCII file, avoiding the use of special characters and any form of encryption. Please also include ''Attn: Public Meeting on U.S. Coral Reef Task Force'', and your name and return address in your Internet message. If you do not receive a confirmation from the system that we have received your Internet message, contact us directly at the telephone number listed above. Finally, you may hand-deliver comments to the above address. We will consider comments and information received by December 10, 1999.

Coral reefs are recognized as being among the most diverse and valuable ecosystems on earth. Reef systems are storehouses of immense biological wealth and provide economic and ecosystem services to millions of people as shoreline protection, areas of natural beauty and recreation, and sources of food, pharmaceuticals, jobs, and revenues. According to one estimate, reef habitats provide humans with services worth about $375 billion each year, despite the fact that they cover less than one percent of the earth's surface.

Unfortunately, coral reefs are also recognized as being among the most threatened marine ecosystems on the planet. Coral reefs are being seriously degraded by human activities, especially overexploitation of resources, destructive fishing practices, coastal development, and runoff from improper land-use practices. The international trade in coral, reef fish, live rock, and other coral reef organisms contributes to the decline and degradation of reefs. Coral reef resources traded internationally supply a wide number of markets and industries, including the seafood industry, live food fish markets, the aquarium trade, the curio and jewelry trade, and the pharmaceutical and research industries. As a major consumer of coral reef organisms and a

leader in coral reef conservation efforts, the United States has a critical responsibility to address coral reef trade issues.

Since 1994, the United States has worked actively to address the coral reef crisis through the United States Coral Reef Initiative and the International Coral Reef Initiative. Federal agencies, State, local, territorial, commonwealth, and local governments, nongovernmental organizations, and commercial interests have worked together to design and implement management, education, monitoring, research, and restoration efforts to conserve and sustainably use coral reef ecosystems. During the 1997 Year of the Reef, the U.S. joined many other nations in activities to raise public awareness about the importance of conserving coral reefs and to facilitate actions to protect coral reef ecosystems. On October 21, 1997, the 105th Congress passed House Concurrent Resolution 8, recognizing the significance of maintaining the health and stability of coral reef ecosystems. The United Nations declared 1998 as the International Year of the Ocean to raise public awareness and increase actions to conserve and use in a sustainable manner the broader ocean environment, including coral reefs.

On June 11, 1998, as part of the National Ocean Conference, President Clinton issued Executive Order 13089, Coral Reef Protection (64 FR 323701). E.O. 13089 established a national policy directing all Federal agencies whose actions may affect U.S. coral reef ecosystems to identify actions which may affect these ecosystems, utilize their authorities to protect and enhance these ecosystems, and to the extent permitted by law, ensure that their actions will not degrade these ecosystems. E.O. 13089 also established a United States Coral Reef Task Force (USCRTF), co-chaired by the Secretary of the Interior and the Secretary of Commerce and also including the Administrator of the Environmental Protection Agency, the Attorney General, the Secretary of Agriculture, the Secretary of Defense, the Secretary of State, the Secretary of Transportation, the Director of the National Science Foundation, the Administrator of the Agency for International Development, and the Administrator of the National Aeronautics and Space Administration.

The duties of the USCRTF include: (a) Coordination of a comprehensive program of coral reef mapping and monitoring; (b) development and implementation of scientific research; (c) conservation, mitigation, and restoration of coral reef damage or degradation; and (d) international cooperation and collaboration. Included in these duties are specific directions to the USCRTF to develop solutions to problems of over-fishing, over-use, and collection of coral reef species, and to assess the U.S. role in international trade and protection of coral reef species.

At its first meeting in October, 1998, at Biscayne National Park, Florida, the USCRTF established a series of Working Groups to develop immediate actions and longer-term strategies, including an International Working Group under the leadership of the U.S. Department of State and the U.S. Agency for International Development. At the second meeting of the USCRTF, held in Hawaii in March, 1999, the International Working Group reported on its review of the effects of international trade, destructive fishing practices, and other issues, which showed that the United States is by far the largest consumer of live coral and marine fishes for the aquarium trade and dead coral skeletons and precious corals for curios and jewelry. The United States also was found to be a major consumer of sea horses, queen conch, and giant clams.

As a result, at its March meeting the USCRTF adopted a resolution requesting an accelerated interagency review of the advisability of pursuing legislation that addresses the trade in coral and coral reef species, led by the Council on Environmental Quality and in close consultation with members of the marine aquarium trade industry that are promoting certification and sustainability in the trade in coral reef species. The USCRTF also supported resolutions adopted by working groups of the Asian Pacific Economic Cooperation (APEC) forum regarding destructive fishing practices. In addition, a Trade Subgroup was established to further examine the nature and extent of threats to reefs related to trade in coral reef resources, evaluate current U.S. activities, and recommend further actions.

We are committed to working in cooperation with State, Territorial, Commonwealth, and local government agencies, nongovernmental organizations, the scientific community, and commercial interests and any other stakeholders in pursuing the objectives of E.O. 13089. With this public meeting, we are seeking comment on the relationship between trade and conservation of non-food fish coral reef species, and what actions the United States should consider, internationally and domestically, to reduce harmful effects of human activity and encourage beneficial measures. There are a number of international and domestic activities which could assist in reducing harmful impacts to coral reefs from overharvest, destructive harvest, and trade. These coral reef conservation activities may include:

(1) Working within existing international frameworks such as the Convention on International Trade In Endangered Species of Wild Fauna and Flora (CITES), the International Coral Reef Initiative (ICRI), and other multilateral, regional, and bilateral forums;

(2) Raising international awareness among governments, NGOs, industry, scientists, and consumers, and gathering better information regarding impacts of international trade;

(3) Building capacity in source countries to address overexploitation of resources, implementation of CITES and national controls, and destructive fishing practices;

(4) Improving law enforcement efforts against illegal coral trade and smuggling into the United States, development of cyanide detection tests for live fish, and committing additional resources to enforcement;

(5) Raising domestic consumer awareness through educational materials and encouraging alternatives to wild collection, such as sustainable captive-breeding or artificial culture or captive breeding;

(6) Analyzing and improving data collection and monitoring for imports of coral reef species into the United States;

(7) And, if necessary, developing new regulatory measures which would create additional authority to restrict commerce and address the role of U.S. consumer demand in causing unsustainable harvest or destructive harvests.

With this public meeting, we are particularly seeking comments about whether actions (1) through (6) can be expected to be sufficient to address the harmful effects of trade in coral reef species, if actively pursued, or whether there is a need for additional regulatory authority now to restrict commerce, in addition to the other actions included in this list. If such new authority were to be developed, we would like to receive comments about whether and how we should consider:

(a) The scope of species and activities which could be subject to additional regulatory authority;

(b) International issues, such as destructive fishing practices, unsustainable harvests, and international trade;

(c) Domestic issues, such as interstate commerce and domestic harvest,

including commercial, subsistence, and recreational uses, and applicability to Federal vs. State waters;

(d) Ways in which such new authority could be used to encourage voluntary measures prior to, or lieu of, the actual imposition of new regulations on harvest and trade; and

(e) Any other issues pertinent to assessing the need for, and effects of, additional regulatory authorities or non-regulatory measures designed to promote coral reef conservation.

You may obtain additional information about the U.S. Coral Reef Task Force and its conservation activities from the internet at http://coralreef.gov or by contacting us at one of the addresses above.

Dated: November 10, 1999.

Marshall P. Jones,

Assistant Director for International Affairs, Fish and Wildlife Service.

[FR Doc. 99–29878 Filed 11–15–99; 8:45 am]

BILLING CODE 4310–55–P

DEPARTMENT OF THE INTERIOR

Fish and Wildlife Service

Extension of Comment Period: Draft Compatibility Policy Pursuant to the National Wildlife Refuge System Improvement Act of 1997

AGENCY: Fish and Wildlife Service, Interior.

ACTION: Notice; extension of comment period.

SUMMARY: We are extending the comment period on the **Federal Register** notice dated September 9, 1999 (64 FR 49067) that invites the public to comment on our draft compatibility policy. We are also extending the comment period on the **Federal Register** proposed rule dated September 9, 1999 (64 FR 49056) that invites the public to comment on our proposed compatibility regulations.

DATES: Submit comments on or before December 8, 1999.

ADDRESSES: Send comments concerning this draft compatibility policy via mail, fax or email to: Chief, Division of Refuges, U.S. Fish and Wildlife Service, 4401 North Fairfax Drive, Room 670, Arlington, Virginia 22203; fax (703)358–2248; e-mail Compatibility__Policy__Comments@fws.gov.

FOR FURTHER INFORMATION CONTACT: Jim Kurth, Chief, Division of Refuges, U.S. Fish and Wildlife Service, Telephone (703)358–1744.

SUPPLEMENTARY INFORMATION: In a **Federal Register** notice dated September 9, 1999, we published our draft compatibility policy describing the process for determining whether or not a use of a national wildlife refuge is a compatible use. We also published in a **Federal Register** proposed rule dated September 9, 1999, our proposed compatibility regulations describing the process for determining whether or not a use of a national wildlife refuge is a compatible use. We received several requests to extend the public comment period beyond the November 8, 1999 due date. In order to ensure that the public has an adequate opportunity to review and comment on our draft policy and proposed regulations we are extending the comment period to December 8, 1999.

Primary Author: J. Kenneth Edwards, Refuge Program Specialist, Division of Refuges, U.S. Fish and Wildlife Service, is the primary author of this notice.

Dated: November 9, 1999.

Jamie Rappaport Clark,

Director, Fish and Wildlife Service.

[FR Doc. 99–29852 Filed 11–15–99; 8:45 am]

BILLING CODE 4310–55–P

DEPARTMENT OF THE INTERIOR

Bureau of Indian Affairs

Submission of Paperwork Reduction Act Request to Office of Management and Budget

AGENCY: Bureau of Indian Affairs, Interior.

ACTION: Notice.

SUMMARY: This notice announces that the Information Collection Request for the Application for Training or Employment Assistance Form, OMB No. 1076–0062, has been submitted to the Office of Management and Budget (OMB) for approval under the provisions of the Paperwork Reduction Act (44 U.S.C. Chapter 25).

DATES: Submit your comments and suggestions on or before December 16, 1999.

ADDRESSES: Written comments should be sent directly to the Office of Management and Budget, Office of Information and Regulatory Affairs, Attention: Desk Officer for the Department of the Interior, Room 10102, 725 17th Street NW, Washington, DC 20503. Send a copy of your comments to Lynn Forcia, Bureau of Indian Affairs, Office of Economic Development, 1849 C Street NW, Mail Stop 4640 MIB, Washington, DC 20240.

FOR FURTHER INFORMATION CONTACT: Copies of the information collection may be obtained by contacting Lynn Forcia, 202–219–5270.

SUPPLEMENTARY INFORMATION:

Abstract

Pub. L. 84–959 and Pub. L. 88–230 authorize the Department through the Bureau of Indian Affairs to help adult Indians who reside on or near Indian reservations to obtain reasonable and satisfactory employment. The Department is authorized to undertake a program of vocational training that provides vocational counseling, guidance, and training in any recognized vocation, apprenticeship, trade, or on-the-job training. The program is available to Indians who are not less than 18 years old and not more than 35 years old who reside on or near an Indian reservation. The Act authorizes the BIA to enter into contracts or agreements with Federal, State, local government agencies or associations with apprenticeship programs or on-the-job training that leads to skilled employment. The same application is used for both 25 CFR parts 26 and 27. The information collection is necessary to assess the need for Adult Vocational Training. A request for comments on this information collection was published in the **Federal Register** on July 8, 1999 (64 FR 36916). One individual submitted comments. The individual recommended the following changes: (1) Include an application number; (2) Collect additional identifying information of each applicant, such as maiden name, sex and education; (3) Rearrange certain data on the form; (4) Clarify that identification of number of dependents means ''minor'' children; and (5) Collect additional information regarding previous repeat services.

The application form already has an OMB identifying number and we have determined additional numbers are not necessary. In order to reduce the burden on the public, we have decided not to collect additional identifying information for each applicant. Rearranging data on the form would be of limited use and many case workers are already familiar with the existing format. Dependents may not necessarily be minors to be considered in determining eligibility. Therefore, no change is necessary. We are in the process of changing the regulations to reflect the need to provide services more than twice to clients, where appropriate. Therefore, additional information will not be collected.

Request for Comments

Comments are invited on (a) whether the information collection is necessary

for the proper performance of the functions of the agency, including whether the information will have practical utility; (b) the accuracy of the agency's estimate of the burden (hours and cost) of the collection of information, including the validity of the methodology and assumptions used; (c) ways to enhance the quality, utility and clarity of the information to be collected; and (d) ways to minimize the burden of the collection of the information on the respondents, including through the use of automated collection techniques or other forms of information technology.

The Office of Management and Budget has up to 60 days to approve or disapprove the information collection but may respond after 30 days; therefore, comments submitted in response to this notice should be submitted to OMB within 30 days in order to assure their maximum consideration. Please note: comments, names and addresses of commentators are available for public review during regular business hours. If you wish us to withhold any information, you must state this prominently at the beginning of your comment. We will honor your request to the extent allowable by law. Please note that an agency may not conduct or sponsor, and a person is not required to respond to, a collection of information unless a currently valid OMB control number is displayed. You may request copies of the information collection forms and our submission to OMB from the person listed in **FOR FURTHER INFORMATION CONTACT** section.

Title: The Adult Vocational Training and Employment Assistance Program Application Form.

OMB approval number: 1076–0062.

Summary of Collection of Information: The collection of information provides pertinent data concerning the individual's training and employment background to determine eligibility for program services.

Frequency: Annually.

Description of respondents: Individual tribal members residing on or near reservations seeking training and employment assistance services.

Estimated completion time: ½ hour.

Number of Annual responses: 4,900.

Annual Burden hours: 2,450 hours.

Bureau Information Collection Clearance Officer: Ruth Bajema, 202–208–2574.

Dated: October 25, 1999.

Kevin Gover,

Assistant Secretary—Indian Affairs.

[FR Doc. 99–29857 Filed 11–15–99; 8:45 am]

BILLING CODE 4310–02–P

DEPARTMENT OF THE INTERIOR

National Park Service

Off-Road Vehicle Management Plan/ Supplement to the Final Environment Impact Statement

AGENCY: National Park Service, Big Cypress National Preserve, Florida, Interior.

ACTION: Notice of Extension of Comment Period for Off-Road Vehicle Management Plan/Supplement to the Final Environment Impact Statement.

SUMMARY: This Off-Road Vehicle Management Plan/Supplement to the Final Environment Impact Statement (ORVMP/SFEIS) identifies and assesses potential impacts of alternative options for the management of off-road vehicles within the Big Cypress National Preserves. The ORVMP/SFEIS describes management concerns which include the need to protect natural resources while providing recreational ORV access to the Preserve.

DATES: The original comment period for the ORVMP/SFEIS as indicated in the **Federal Register** on August 16, 1999, was from August 13, 1999, until November 12, 1999. This period is extended until December 13, 1999. written comments must be received by the Superintendent at the address below or postmarked no later than December 13, 1999.

ADDRESSES: The ORVMP/SFEIS may be viewed on the Internet at www.nps.gov/BICY/ORVPLAN. Copies of the ORVMP/SFEIS are available from the Superintendent at the following address. Our practice is to make comments, including names and home addresses of respondents, available for public review during regular business hours. Individual respondents may request that we withhold their home address from the rulemaking record, which we will honor to the extent allowable by law. There also may be circumstances in which we would withhold from the rulemaking record a respondent's identity, as allowable by law. If you wish for us to withhold your name and/or address, you must state this prominently at the beginning of your comment. However, we will not consider anonymous comments. We will make all submissions from organizations or businesses, and from individuals identifying themselves as representatives or officials of organizations or businesses, available for public inspection in their entirety.

Superintendent,
Big cypress National Preserve,
HCR 61, Box 110,
Ochopee, Florida 34141,
Telephone: (941) 695–2000.

Copies of the ORVMP/SFEIS may also be read at the following libraries:

Barron Public Library,
P.O. Box 785,
La Belle, FL 33935,
Telephone: (941) 675–0833.

Glades County Public Library,
P.O. Box 505,
Moore Haven FL 33471,
Telephone: (941) 946–0744.

Monroe County Public Library,
700 Fleming Street,
Key West FL 33040,
Telephone: (305) 292–3595.

Collier County Public Library,
850 Central Avenue,
Naples, FL 34102,
Telephone: (941) 261–8208.

Miami-Dade Public Library,
101 W. Flagler Street,
Miami, FL 33130,
Telephone: (305) 375–2665.

Broward County Public Library,
100 South Andrews Avenue,
Ft. Lauderdale FL 33301,
Telephone: (954) 357–7444.

Palm Beach County Public Library,
3650 Summit Boulevard,
West Palm Beach FL 33406,
Telephone: (561) 233–2600.

Lee County Public Library,
2050 Lee Street,
Fort Myers FL 33901,
Telephone: (941) 479–4620.

FOR FURTHER INFORMATION CONTACT: For additional information, please contact the Superintendent.

SUPPLEMENTARY INFORMATION: Due to the rescheduling of public meetings for November 1 and 3 because of Hurricane Floyd, sufficient time did not remain for comments to be submitted. Several organizations requested an extension to allow sufficient time to respond after the public meetings.

Dated: November 5, 1999.

Frances Peltier,

Acting Regional Director, Southeast Region.

[FR Doc. 99–29814 Filed 11–15–99; 8:45 am]

BILLING CODE 4310–70–M

DEPARTMENT OF THE INTERIOR

National Park Service

Boston Harbor Islands Advisory Council; Notice of Meeting

Notice is hereby given in accordance with the Federal Advisory Committee Act (Pub. L. 92–463) that the Boston Harbor Islands Advisory Council will meet on Thursday, December 9, 1999. The meeting will convene at 4 pm at the

New England Aquarium, in the Conference Center, Long Wharf, Boston, Massachusetts.

The Advisory Council was appointed by the Director of National Park Service pursuant to Public Law 104–333. The 28 members represent business, educational, cultural, and environmental entities; municipalities surrounding Boston Harbor; and Native American interests. The purpose of the Council is to advise and make recommendations to the Boston Harbor Islands Partnership with respect to the development and implementation of a management plan and the operation of the Boston Harbor Islands National Recreation Area.

The Agenda for this meeting is as follows:

1. Approval of minutes from September 30, 1999
2. Update on the status of the Draft General Management Plan
3. Discussion about hosting a series of public meetings regarding the plan
4. Discussion about the allocation of the grant money from the Merck Family Trust
5. Initiation of the nominating process for the upcoming March elections

The meeting is open to the public. Further information concerning Council meetings may be obtained from the Superintendent, Boston Harbor Islands. Interested persons may make oral/written presentations to the Council or file written statements. Such requests should be made at least seven days prior to the meeting to: Superintendent, Boston Harbor Islands NRA, 408 Atlantic Ave., Boston, MA, 02110, telephone (617) 223–8667.

Dated: November 2, 1999.

George E. Price, Jr.,

Superintendent, Boston Harbor Islands NRA.

[FR Doc. 99–29780 Filed 11–15–99; 8:45 am]

BILLING CODE 4310–70–M

DEPARTMENT OF THE INTERIOR

National Park Service

National Register of Historic Places; Notification of Pending Nominations

Nominations for the following properties being considered for listing in the National Register were received by the National Park Service before November 6, 1999.

Pursuant to § 60.13 of 36 CFR part 60 written comments concerning the significance of these properties under the National Register criteria for evaluation may be forwarded to the National Register, National Park Service, 1849 C St. NW, NC400, Washington, DC 20240. Written comments should be submitted by December 1, 1999.

Carol D. Shull,

Keeper of the National Register.

ARKANSAS

Newton County

May Farmstead, 3 mi. NE of Bass on Cave Cr., Bass vicinity, 99001470

CALIFORNIA

Riverside County

Martinez Canyon Rockhouse, BLM, Palm Springs-South Coast Resource Area, North Palm Springs vicinity, 99001471

CONNECTICUT

New Haven County

North Branford Center Historic District, Roughly along Church and North Sts., North Branford, 99001472

GEORGIA

Lincoln County

Simmons—Cullars House, Jct. GA 79 and Co. Rd. 25, Lincolnton vicinity, 99001473

IDAHO

Bannock County

L.D.S. Ward Building, 187 S. 2nd Ave., Lava Hot Springs, 99001474

Kootenai County

Crane, Silas W., and Elizabeth, House, 201 S. Coeur d'Alene Ave., Harrison, 99001476

Owyhee County

Gusman, James E., and Emma, Ranch, South Mountain Rd., Jordan Valley vicinity, 99001477

Teton County

Spud Drive-In Theater (Drive-In Theaters in Idaho MPS) 231 ID 33, Driggs vicinity, 99001475

LOUISIANA

St. James Parish Millet House (Louisiana's French Creole Architecture MPS) 509 E. Jefferson Hwy., Gramercy, 99001478

St. Martin Parish Burdin House, 422 N. Pinaud St., St. Martinville, 99001479

MASSACHUSETTS

Middlesex County

Musketaquid Mills, 131 Davidson St., Lowell, 99001480

NEW HAMPSHIRE

Cheshire County

Beaver Mills, 93–115 Railroad St., Keene, 99001481

Hillsborough County

Citizens' Hall, 13–12 Citizens' Hall Rd., Lyndeborough, 99001482

NEW YORK

Columbia County

Williams, Elisha, House (Hudson MPS) 7 Aitkin Ave., Hudson, 99001483

Greene County

Hunter Synagogue, Main St., Hunter, 99001484

St. Francis DeSales Church, Church St., Lexington, 99001485

Herkimer County

Frankfort Town Hall, 140 S. Litchfield St., Frankfort, 99001486 Frisbie, Augustus, House, NY 29A, Salisbury Center, 99001487

Orange County

Powelton Club, 2963 Balmville Rd., Balmville, 99001488

Seward, William Henry, Memorial, Main St., Florida, 99001489

Oswego County

Pratt, John Wells, House, 177 S. 1st St., Fulton, 99001490

Schenectady County

Brandywine Avenue School, 108 Brandywine Ave., Schenectady, 99001491

Ulster County

Maverick Concert Hall, Off Maverick Rd., Hurley, 99001492

Van Steenburgh, Tobias, House, 93 Wall St., Kingston, 99001493

NORTH CAROLINA

Avery County

Avery County Jail, 1829 Schultz Cir., Newland, 99001494

Transylvania County

Hanckel—Barclay House (Transylvania County MPS), .8 mi. W of Jct. NC 1114 and US 276, Brevard vicinity, 99001495

OHIO

Columbiana County

Bell, Hiram, Farmstead, 43628 OH 517, Columbiana vicinity, 99001496

Lorain County

Lord, Addison, House, 315 West Ave., Elyria, 99001497

PENNSYLVANIA

Bucks County

Longland, 2909 Holicong Rd. (Buckingham Township), Holicong vicinity, 99001498

TEXAS

Dallas County

Texas Farm and Ranch Building, 3300 Main St., Dallas, 99001499

VIRGINIA

Albemarle County

Batesville Historic District, Jct. of Co. Rds. 692 and 635, Batesville vicinity, 99001500

Home Tract, 699 Ivy Depot Rd., Ivy, 99001501

Arlington County

Clarendon School, 3550 Wilson Bvd., Arlington, 99001502

Fairfax County

Bowman, A. Smith, Distillery, 1875 Old Reston Ave., Reston, 99001503

Franklin County

Evergreen—Callaway—Deyerle House, 536 Coles Cr. Rd., Rocky Mount vicinity, 99001504

Loudoun County

Hamilton Masonic Lodge, 43 S. Rogers St., Hamilton, 99001505

Lynchburg Independent City, Lynchburg Hospital, 701–709 Hollins Mill Rd., Lynchburg, 99001506

WYOMING

Teton County

Wort Hotel, 50 N. Glenwood St., Jackson, 99001507

A Request for a shortened comment period has been make for the following resource:

NORTH CAROLINA

Wake County

Raleigh Water Works and E. B. Bain Treatment Plant, 1810 Fayetteville Rd., Raleigh, 99001452

The Comment period will end three (3) days after printing of this notification.

A Request for a move has been made for the following Resource:

NORTH CAROLINA

Oredell County

Houston, George, House (Iredell County MRA),
NC 115, Mount Mourne, 80002865

A request for REMOVAL has been made for the following resources:

MISSISSIPPI

Hinds County

Cain Hall (Raymond and Vicinity MRA), Approx. .75 mi. W of jct. of MS 18 and MS 467, Raymond, 97000214

Lauderdale County

Suttle Building, (Meridian MRA), 801 22nd Av., Meridian, 79003406

Copiah County

Rockport Bridge, (Historic Bridges of Mississippi TR), Spans Pearl R. on Co. Rd. S of Georgetown, Georgetown vicinity 88002414

SOUTH DAKOTA

Butte County

SD DOT Bridge Number 10–112–355 (Historic Bridges of South Dakota MPS) Diversion Dam Rd. over Crow Cr., Belle Fourche vicinity 93001276

Charles Mix County

SD DOT Bridge Number 12–503–230 (Historic Bridges of South Dakota MPS) Local Rd. over Choteau Cr., Wagner vicinity, 93001278

Codington County

Larson Bridge, (Historic Bridges of South Dakota MPS), Local Rd. over Willow Cr., Watertown vicinity, 93001266

Davison County

SD DOT Bridge Number 18–142–150 (Historic Bridges of South Dakota MPS), Local Rd. over Enemy Cr., Mitchell vicinity, 93001285

Gregory County

SD DOT Bridge Number 27–060–298 (Historic Bridges of South Dakota MPS), Local Rd. over unnamed Cr., Gregory vicinity, 93001290

Kingsbury County

Esmond Bridge (Historic Bridges of South Dakota MPS), Local Rd. over Redstone Cr., De Smet vicinity, 93001298

SD DOT Bridge Number 39–176–100 (Historic Bridges of South Dakota MPS), Local Rd. over unnamed Cr., De Smet vicinity, 93001299

Meade County

SD DOT Bridge Number 47–215–363 (Historic Bridges of South Dakota MPS), Local Rd. over Bell Fourche R., Sturgis vicinity, 93001303

Minnehaha County

SD DOT Bridge Number 50–200–035 (Historic Bridges of South Dakota MPS), Local Rd. over Big Sioux R., Dell Rapids vicinity, 93001267

Sanborn County

SD DOT Bridge Number 56–174–090 (Historic Bridges of South Dakota MPS), Local Rd. over Redstone Cr., Artesian vicinity, 93001312

TENNESSEE

Cocke County

Greenlawn, NW of Newport on Old Rankin Rd., Newport vicinity, 75001743

Sevier County

Mountain View Hotel, 400 Parkway, Gatlinburg, 84003681

[FR Doc. 99–29815 Filed 11–15–99; 8:45 am]

BILLING CODE 4310–70–P

DEPARTMENT OF JUSTICE

National Institute of Corrections

Solicitation for a Cooperative Agreement; Cancellation

AGENCY: National Institute of Corrections, Department of Justice.

ACTION: Cancellation for a cooperative agreement.

On October 13, 1999 (Volume 64, Number 197) page 55490–55492 of the **Federal Register**, the National Institute of Corrections published a notice of a solicitation for a cooperative agreement entitled ''How to Develop Management Training.'' The NIC application number is 00A10. This notice is canceled. It will be revised and reissued at a later date.

Morris L. Thigpen,

Director, National Institute of Corrections.

[FR Doc. 99–29792 Filed 11–15–99; 8:45 am]

BILLING CODE 4410–36–M

DEPARTMENT OF LABOR

Office of the Secretary

Presidential Task Force on Employment of Adults with Disabilities; Notice of Town Hall Meeting

AGENCY: Office of the Secretary, Labor.

ACTION: Notice of Town Hall Meeting

SUMMARY: Pursuant to Executive Order No. 13078, authorizing the Presidential Task Force on Employment of Adults with Disabilities (Task Force), notice is given of the third Town Hall Meeting. The purpose of the Task Force is to create a ''coordinated and aggressive national policy to bring adults with disabilities into gainful employment at a rate that is as close as possible to that of the general adult population.'' The purpose of the Town Hall Meetings is to invite the public to participate and discuss their thoughts, concerns, and experiences with Task Force members. The topics to be addressed at this Town Hall Meeting will include expanding employment opportunities for people with the most significant disabilities, including strategies for increasing choice and community based employment, use of technology, and business/entrepreneurial development.

DATE: The Task Force will hold the third Town Hall Meeting on Wednesday, December 8, 1999 from 1:00 p.m. to approximately 6:00 p.m. Registration will begin at 11:00 a.m. The date, location, and time for each subsequent Town Hall Meeting will be announced in advance in the **Federal Register**.

ADDRESS: The site of this Town Hall Meeting is the Chicago Hilton and Towers, 720 South Michigan Avenue, Chicago, IL. All interested parties are invited to attend this Town Hall Meeting. Seating may be limited and will be available on a first-come, first-serve basis.

FOR FURTHER INFORMATION CONTACT: Paul E. Bennett, Presidential Task Force on Employment of Adults with Disabilities, U. S. Department of Labor, 200 Constitution Avenue, N. W., Room S–2220D, Washington, DC 20210. Requests can be made by e-mail to: bennett-paul@dol.gov; by phone (202) 693–4939; TTY (202) 693–4920; or fax (202) 693–4929. These are not toll-free numbers.

SUPPLEMENTARY INFORMATION: Pursuant to Executive Order No. 13078, the Presidential Task Force on Employment of Adults with Disabilities (Task Force), notice is given on the third Town Hall Meeting.

The purpose of the Task Force is to develop a ''coordinated and aggressive

national policy to bring adults with disabilities into gainful employment at a rate that is as close as possible to that of the general adult population.'' The purpose of this Town Hall Meeting is to invite stakeholders to address the alarming unemployment rate among Americans with disabilities. Particular focus is requested at this meeting on expanding employment opportunities for people with the most significant disabilities, including strategies for increasing choice and community based employment, use of technology, and business/entrepreneurial development.

Appointed by President Clinton, the membership of the Task Force is as follows: Secretary of Labor, Chair of the Task Force; Chair of the President's Committee on Employment of People with Disabilities, Vice Chair of the Task Force; Secretary of Education; Secretary of Veterans Affairs; Secretary of Health and Human Services; Commissioner of the Social Security Administration; Secretary of the Treasury; Secretary of Commerce; Secretary of Transportation; Director of the Office of Personnel Management; Administrator of the Small Business Administration; Chair of the Equal Employment Opportunity Commission; Commissioner of the Federal Communications Commission; Chair of the National Council on Disability; and such other senior executive branch officials as may be determined by the Chair of the Task Force.

Agenda

The Town Hall Meeting is an open forum where the public is invited to give testimony and/or make presentations with a focus on expanding employment opportunities for people with the most significant disabilities, including strategies for increasing choice and community based employment.

Public Participation:

Members of the public wishing to present an oral statement to the Task Force should forward their requests as soon as possible but no later than November 24, 1999. Requests may be made by telephone, fax machine, or mail. Time permitting, the members of the Task Force will attempt to accommodate all requests by reserving time for presentations. The order of persons making such presentations will be assigned in the order in which the requests are received. Members of the public must limit oral statements to five minutes, but extended written statements may be submitted for the record. Members of the public may also submit written statements for distribution to the Task Force members and inclusion in the public record without presenting oral statements. Such written statements should be sent by mail or fax machine no later than November 24, 1999.

Minutes of all Town Hall Meetings and summaries of other documents will be available to the public on the Task Force's web site *www.dol.gov*.

Reasonable accommodations will be available. Persons needing any special assistance such as sign language interpretation, or other special accommodation, are invited to contact the Task Force as shown above.

Signed at Washington, DC, this 9th day of November, 1999.

Rebecca L. Ogle,

Executive Director,

Presidential Task Force on Employment of Adults with Disabilities.

[FR Doc. 99–29848 Filed 11–15–99; 8:45 am]

BILLING CODE 4510–23–P

DEPARTMENT OF LABOR

Employment Standards Administration

Proposed collection; comment request

ACTION: Notice.

SUMMARY: The Department of Labor, as part of its continuing effort to reduce paperwork and respondent burden, conducts a preclearance consultation program to provide the general public and Federal agencies with an opportunity to comment on proposed and/or continuing collections of information in accordance with the Paperwork Reduction Act of 1995 (PRA95) [44 U.S.C. 3506(c)(2)(A)]. This program helps to ensure that requested data can be provided in the desired format, reporting burden (time and financial resources) is minimized, collection instruments are clearly understood, and the impact of collection requirements on respondents can be properly assessed. Currently, the Employment Standards Administration is soliciting comments concerning the proposed extension collections of: (1) Notice of Final Payment or Suspension of Compensation Benefits (Longshore and Harbor Workers' Compensation Act); and (2) Work Experience and Career Exploration Programs, Regulations 29 CFR Part 570.35a (Fair Labor Standards Act). A copy of the proposed information collection requests can be obtained by contacting the office listed below in the addressee section of this notice.

DATES: Written comments must be submitted to the office listed in the addressee section below on or before January 18, 2000.

ADDRESSEE: Ms. Patricia A. Forkel, U. S. Department of Labor, 200 Constitution Ave., N.W., Room S–3201, Washington, D.C. 20210, telephone (202) 693–0339 (this is not a toll-free number), fax (202) 693–1451.

SUPPLEMENTARY INFORMATION:

Notice of Final Payment or Suspension of Compensation Benefits

I. Background

The Office of Workers' Compensation Programs (OWCP) administers the Longshore and Harbor Workers' Compensation Act. The Act provides benefits to workers injured in maritime employment on the navigable waters of the United States or in an adjoining area customarily used by an employee in loading, unloading, repairing, or building a vessel. Under Section 14(g) of the Act, the employer or its insurance carrier must file a report of the compensation paid to a claimant at the time final payment is made. Filing of the report is mandatory and failure to do so is subject to a civil penalty. This form is used to notify OWCP that payment of compensation benefits has been stopped or suspended in a case.

II. Review Focus

The Department of Labor is particularly interested in comments which:

* evaluate whether the proposed collection of information is necessary for the proper performance of the functions of the agency, including whether the information will have practical utility;
* evaluate the accuracy of the agency's estimate of the burden of the proposed collection of information, including the validity of the methodology and assumptions used;
* enhance the quality, utility and clarity of the information to be collected; and
* minimize the burden of the collection of information on those who are to respond, including through the use of appropriate automated, electronic, mechanical, or other technological collection techniques or other forms of information technology, e.g., permitting electronic submissions of responses.

III. Current Actions: The Department of Labor seeks the extension of approval to collect this information in order to carry out its responsibility to manage the case file and verify that the injured worker has received all benefits that he/she is entitled to receive under the Act.

Type of Review: Extension.

Agency: Employment Standards Administration.

Title: Notice of Final Payment or Suspension of Compensation Benefits.

OMB Number: 1215–0024.

Agency Number: LS–208.

Affected Public: Businesses or other for-profit.

Total Respondents: 500.

Frequency: On occasion.

Total Responses: 19,350.

Average Time per Response: 15 minutes.

Estimated Total Burden Hours: 4,838.

Total Burden Cost (capital/startup): $0.

Total Burden Cost (operating/maintenance): $10,070.

Work Experience and Career Exploration Program (WECEP)

I. Background

Section (3)(1) of the Fair Labor Standards Act (FLSA) establishes a minimum age of 16 for most nonagricultural employment, but allows the employment of 14 and 15 year olds in occupations other than manufacturing and mining if the Secretary of Labor determines such employment is confined to periods which will not interfere with their schooling and to conditions which will not interfere with their health and well-being. Subpart C of Regulations, 29 CFR Part 570, Child Labor Regulations, Orders and Statements of Interpretation, sets forth the employment standards for 14 and 15 year olds (Child Labor Reg. 3). Section 570.35a of these regulations permits employment of 14 and 15 year olds under conditions otherwise prohibited by child Labor Reg. 3 pursuant to a school-supervised and school-administered Work Experience and Career Exploration Program (WECEP) which meets the stated requirements. In order to utilize the WECEP provisions of Child Labor Reg. 3, section 570.35 of the regulations require a State Educational Agency to file an application for approval of a State WECEP program as one not interfering with schooling or with the health and well-being of the minors involved and therefore not constituting oppressive child labor. Section 570.35a(b)(3)(vi) of the regulations requires each student participating in a WECEP to execute a written training agreement signed by the teacher-coordinator, the employer and the student and signed or otherwise consented to by the student's parent or guardian.

II. Review Focus

The Department of Labor is particularly interested in comments which:

* evaluate whether the proposed collection of information is necessary for the proper performance of the functions of the agency, including whether the information will have practical utility;

* evaluate the accuracy of the agency's estimate of the burden of the proposed collection of information, including the validity of the methodology and assumptions used;

* enhance the quality, utility and clarity of the information to be collected; and

* minimize the burden of the collection of information on those who are to respond, including through the use of appropriate automated, electronic, mechanical, or other technological collection techniques or other forms of information technology, e.g., permitting electronic submissions of responses.

III. Current Actions

State educational agencies are required to file applications for approval of WECEP which provide exceptions to the child labor regulations issued under the Fair Labor Standards Act. State educational agencies are also required to maintain certain records with respect to approved WECEP programs. The Department of Labor seeks the extension of the collection of information in order to carry out its responsibility to determine that regulatory tests for approval of the program have been met, and to document the validity of the WECEP program as one which is structured to provide training for the student.

Type of Review: Extension.

Agency: Employment Standards Administration.

Title: Work Experience and Career Exploration Programs (WECEP), 29 CFR Part 570.35A.

OMB Number: 1215–0121.

Affected Public: State, Local or Tribal Government, Individuals or households.

Total Respondents: 14,014.

Frequency: Recordkeeping; Biennial Reporting.

Total Responses: 14,0140.

Average Time per Response

Reporting, WECEP Application—2 hours.

Reporting, Written Training Agreement—1 hour.

Recordkeeping, WECEP Program Information,—1 hour.

Recordkeeping, Filing of WECEP Record and Training Agreement—½ minute.

Estimated Total Annual Reporting and Recordkeeping Burden: 7,145 hours.

Total Burden Cost (capital/startup): $0.

Total Burden Cost (operating/maintenance): $2.52.

Comments submitted in response to this notice will be summarized and/or included in the request for Office of Management and Budget approval of the information collection request; they will also become a matter of public record.

Dated: November 9, 1999.

Margaret J. Sherrill

Chief, Branch of Management Review and Internal Control, Division of Financial Management, Office of Management, Administration and Planning Employment Standards Administration.

[FR Doc. 99–29847 Filed 11–15–99; 8:45 am]

BILLING CODE 4510–27–P

NATIONAL ARCHIVES AND RECORDS ADMINISTRATION

Agency Information Collection Activities: Proposed Collections; Comment Request

AGENCY: National Archives and Records Administration (NARA).

ACTION: Notice.

SUMMARY: NARA is giving public notice that the agency proposes to request extension of two currently approved information collections. The first one is used by participants in training courses and workshops that the National Archives and Records Administration (NARA) conducts. NARA needs the information to assess customer satisfaction with course content and delivery and to ensure that the training meets the customer?s needs. The second one is for submitting requests for copies of pages of Federal land entry case files that are in the National Archives of the United States. The public is invited to comment on the proposed information collection pursuant to the Paperwork Reduction Act of 1995.

DATES: Written comments must be received on or before January 18, 2000, to be assured of consideration.

ADDRESSES: Comments should be sent to: Paperwork Reduction Act Comments (NHP), Room 3200, National Archives and Records Administration, 8601 Adelphi Rd, College Park, MD 20740–6001; or faxed to 301–713–6913; or electronically mailed to tamee.fechhelm@arch2.nara.gov.

FOR FURTHER INFORMATION CONTACT: Requests for additional information or copies of the proposed information collections and supporting statements should be directed to Tamee Fechhelm at telephone number 301–713–6730, or fax number 301–713–6913.

SUPPLEMENTARY INFORMATION: Pursuant to the Paperwork Reduction Act of 1995 (Pub. L. 104–13), NARA invites the general public and other Federal agencies to comment on proposed information collections. The comments and suggestions should address one or more of the following points: (a) Whether the proposed information collections are necessary for the proper performance of the functions of NARA; (b) the accuracy of NARA's estimate of the burden of the proposed information collections; (c) ways to enhance the quality, utility, and clarity of the information to be collected; and (d) ways to minimize the burden of the collection of information on respondents, including the use of information technology. The comments that are submitted will be summarized and included in the NARA request for Office of Management and Budget (OMB) approval. All comments will become a matter of public record. In this notice, NARA is soliciting comments concerning the following information collections:

1. *Title:* National Archives and Records Administration Class Evaluation Forms.

OMB number: 3095–0023.

Agency form number: NA Form 2019.

Type of review: Regular.

Affected public: Individuals or households, business or other for-profit, nonprofit organizations and institutions, Federal, state, local, or tribal government agencies.

Estimated number of respondents: 6,400.

Estimated time per response: 5 minutes.

Frequency of response: On occasion (when respondent takes NARA sponsored training classes).

Estimated total annual burden hours: 533 hours.

Abstract: The information collection allows uniform measurement of customer satisfaction with NARA training. NARA distributes the approved form to the course coordinators on diskette for customization of selected elements, shown as shaded areas on the form submitted for clearance.

2. *Title:* National Archives Order for Land Claim Records

OMB number: 3095–0033.

Agency form number: NATF 84

Type of review: Regular.

Affected public: Individuals who wish to order copies of land claim records in the National Archives of the United States.

Estimated number of respondents: 10,000.

Estimated time per response: 10 minutes.

Frequency of response: On occasion (when respondent wishes to search for or order copies of land claim records).

Estimated total annual burden hours: 1,667 (rounded off number).

Abstract: The NATF form 84 is used by researchers to request that NARA search for and make copies of pages from Federal land entry case files (land claim records) in the custody of the National Archives. These records generally date from 1800 to approximately 1965. Submission of requests on a form is necessary to handle in a timely fashion the volume of requests received for these records (approximately 10,000 per year) and the need to obtain specific information from the researcher to search for the records sought. The form will be printed on carbonless paper as a multi-part form to allow the researcher to retain a copy of his request and NARA to respond to the researcher on the results of the search or to bill for copies if the researcher wishes to order the copies. As a convenience, the form will allow researchers to provide credit card information to authorize billing and to expedite mailing of the copies. NARA is working on a system to accept electronic submission of requests.

Dated: November 9, 1999.

L. Reynolds Cahoon,

Assistant Archivist for Human Resources and Information Services.

[FR Doc. 99–29788 Filed 11–15–99; 8:45 am]

BILLING CODE 7515–01–P

NATIONAL ARCHIVES AND RECORDS ADMINISTRATION

Records Schedules; Availability and Request for Comments

AGENCY: National Archives and Records Administration, Office of Records Services—Washington, DC.

ACTION: Notice of availability of proposed records schedules; request for comments.

SUMMARY: The National Archives and Records Administration (NARA) publishes notice at least once monthly of certain Federal agency requests for records disposition authority (records schedules). Once approved by NARA, records schedules provide mandatory instructions on what happens to records when no longer needed for current Government business. They authorize the preservation of records of continuing value in the National Archives of the United States and the destruction, after a specified period, of records lacking administrative, legal, research, or other value. Notice is published for records schedules in which agencies propose to destroy records not previously authorized for disposal or reduce the retention period of records already authorized for disposal. NARA invites public comments on such records schedules, as required by 44 U.S.C. 3303a(a).

DATES: Requests for copies must be received in writing on or before January 3, 2000. Once the appraisal of the records is completed, NARA will send a copy of the schedule. NARA staff usually prepare appraisal memorandums that contain additional information concerning the records covered by a proposed schedule. These, too, may be requested and will be provided once the appraisal is completed. Requesters will be given 30 days to submit comments.

ADDRESSES: To request a copy of any records schedule identified in this notice, write to the Life Cycle Management Division (NWML), National Archives and Records Administration (NARA), 8601 Adelphi Road, College Park, MD 20740–6001. Requests also may be transmitted by FAX to 301–713–6852 or by e-mail to records.mgt@arch2.nara.gov. Requesters must cite the control number, which appears in parentheses after the name of the agency which submitted the schedule, and must provide a mailing address. Those who desire appraisal reports should so indicate in their request.

FOR FURTHER INFORMATION CONTACT: Marie Allen, Director, Life Cycle Management Division (NWML), National Archives and Records Administration, 8601 Adelphi Road, College Park, MD 20740–6001. Telephone: (301) 713–7110. E-mail: records.mgt@arch2.nara.gov.

SUPPLEMENTARY INFORMATION: Each year Federal agencies create billions of records on paper, film, magnetic tape, and other media. To control this accumulation, agency records managers prepare schedules proposing retention periods for records and submit these schedules for NARA's approval, using the Standard Form (SF) 115, Request for Records Disposition Authority. These schedules provide for the timely transfer into the National Archives of historically valuable records and authorize the disposal of all other

records after the agency no longer needs to conduct its business. Some schedules are comprehensive and cover all the records of an agency or one of its major subdivisions. Most schedules, however, cover records of only one office or program or a few series of records. Many of these update previously approved schedules, and some include records proposed as permanent.

No Federal records are authorized for destruction without the approval of the Archivist of the United States. This approval is granted only after a thorough consideration of their administrative use by the agency of origin, the rights of the Government and of private persons directly affected by the Government's activities, and whether or not they have historical or other value.

Besides identifying the Federal agencies and any subdivisions requesting disposition authority, this public notice lists the organizational unit(s) accumulating the records or indicates agency-wide applicability in the case of schedules that cover records that may be accumulated throughout an agency. This notice provides the control number assigned to each schedule, the total number of schedule items, and the number of temporary items (the records proposed for destruction). It also includes a brief description of the temporary records. The records schedule itself contains a full description of the records at the file unit level as well as their disposition. If NARA staff has prepared an appraisal memorandum for the schedule, it too, includes information about the records. Further information about the disposition process is available on request.

Schedules Pending

1. Department of Agriculture, Economic Research Service (N1–354–99–1, 3 items, 2 temporary items). Older records accumulated by the Economic Research Service, approximately 1950–1970, consisting of reports relating to the administration of projects and computer printouts pertaining to payments to individuals. Records relating to the training of foreign agricultural students are proposed for permanent retention.

2. Department of the Army, Agency-wide (N1–AU–99–7, 3 items, 2 temporary items). Records containing information pertaining to U.S. Government initiated proposals and arrangements for tours by foreign representatives to Army and Defense contractor facilities. Included are invitations, acceptances, itineraries, security clearance information, biographies, and reports prepared by tour directors and escort officers. Also included are electronic copies of records created using electronic mail and word processing. Recordkeeping copies of files accumulated by the Office of the Deputy Chief of Staff for Intelligence and major command headquarters are proposed for permanent retention.

3. Department of Energy, National Renewable Energy Laboratory (N1–434–99–4, 7 items, 7 temporary items). Records relating to the administration and management of the Laboratory's Legal Office. Included are attorney working files, correspondence files, records relating to standards of conduct and intellectual property, and electronic copies of documents created using electronic mail and word processing.

4. Department of Health and Human Services, Office of Public Health and Science (N1–468–99–4, 11 items, 9 temporary items). Forms, tracking materials, drafts, and other records of the Office of Research Integrity relating to misconduct in science. Included are forms submitted by institutions applying for or receiving assistance under the Public Health Service Act, an electronic database recording summary information on each institution and its policies regarding scientific misconduct, drafts and other records relating to inquiries and investigations, and electronic copies of documents created using electronic mail and word processing. Proposed for permanent retention are recordkeeping copies of such case records as final reports, case summaries, news clippings about the case, and transcripts of interviews.

5. Department of Housing and Urban Development, Public Housing Administration (N1–196–99–1, 4 items, 1 temporary item). Background files and working papers, such as correspondence and memos that facilitated the compilation of data for statistical summaries and reports. Temporary records were accumulated between 1943 and 1959. Policy circulars, contracts for emergency military housing, and files relating to property disposal are proposed for permanent retention.

6. Department of Justice, U.S. Marshals Service (N1–527–99–4, 10 items, 9 temporary items). Records of the Office of Internal Affairs relating primarily to investigations of misconduct by agency employees. Included are such records as complaints, preliminary inquiries, reports, forms documenting the loss of Government property, and records of firearms discharges. Also included are electronic copies of documents created using electronic mail and word processing. Recordkeeping copies of files on significant cases are proposed for permanent retention.

7. Department of Justice, Justice Management Division (N1–60–00–1, 1 item, 1 temporary item). Computer systems activity and access records. Records include such information as addresses of senders and recipients of electronic mail, date and time of log on and log off, and user passwords.

8. Department of State, Foreign Service Institute (N1–59–99–22, 1 item, 1 temporary item). Records relating to the management and tracking of credit card transactions.

9. Department of State, U.S. Mission to the United Nations (N1–84–99–3, 5 items, 3 temporary items). Older records, dating from 1949–1967, that relate to loyalty reviews by the Civil Service Commission, arrangements for social events sponsored by the United Nations, and lists of members and employees of permanent missions to the United Nations. Files related to speeches by Ambassador Arthur J. Goldberg and to a United Nations financial crisis in the early 1960s are proposed for permanent retention.

10. Department of State, Bureau of Finance and Management Policy (N1–59–99–18, 12 items, 8 temporary items). Records of the Committee Management Officer relating to the publication of advisory committee notices in the **Federal Register** and Government-wide committee management. Also included are electronic copies of documents created using electronic mail and word processing. Recordkeeping copies of files relating to advisory committee policy issues and the establishment and activities of advisory committees sponsored by the Department of State are proposed for permanent retention.

11. Department of the Treasury, Internal Revenue Service (N1–58–99–6, 3 items, 3 temporary items). Reference lists of tax return document locator numbers extracted from the master file of tax returns. These lists are used by IRS service centers to pull tax returns with open balances.

12. Farm Credit Administration, Agency-wide (N1–103–99–1, 8 items, 7 temporary items). Reduction in the retention period for records previously approved for disposal, including financial data reports, reports of examination workpapers, and receivership case files. Also included are electronic copies of records created using electronic mail and word processing. The schedule also reduces the time period for the retirement and transfer to the National Archives of recordkeeping copies of reports of examinations, which were previously approved for permanent retention.

13. General Services Administration, Office of the Inspector General (N1–269–99–1, 5 items, 5 temporary items). Audit case files and investigative case files relating to agency programs, operations, procedures, external audits of contractors and grantees, and employee and Hotline complaints. Included are audit reports, correspondence, memoranda, investigative reports, notes, attachments, working papers, and electronic copies of documents created using electronic mail and word processing. Significant investigative case files will be brought to the attention of the National Archives and Records Administration for appraisal on a case by case basis.

14. National Aeronautics and Space Administration, Office of Financial Management (N1–255–96–3, 7 items, 7 temporary items). Forms that authorize NASA organizational units to use a stated amount of resources (funds or personnel) for the execution of approved agency projects and activities. Also included are electronic copies of these records created using electronic mail and word processing.

15. National Archives and Records Administration, Electronic and Special Media Records Services Division (N2–197–99–1, 1 item, 1 temporary item). Civil Aeronautics Board surveys of airline passenger origins and destinations in electronic form for March 1962, September 1962, and September 1964. Records were accessioned into the National Archives but cannot be copied due to technical problems.

16. National Imagery and Mapping Agency, Agency-wide (N1–537–98–3, 116 items, 113 temporary items). Records relating to legal matters. Included are Inspector General legal review files, procurement and contract review files, records relating to the investigation and processing of claims, patent applications, invention rights files, trademark solicitation files, litigation case files, Congressional correspondence, ethics training records, files relating to outside employment of NIMA staff, and conflict of interest review records. Also included are electronic copies of documents created using electronic mail and word processing. Recordkeeping copies of legal opinions and files related to the development of legislation are proposed for permanent retention.

17. Office of Personnel Management (N1–146–00–1, 4 items, 2 temporary items). Older Civil Service Commission records including retirement annuity cards and rosters of scientists and engineers. Records date from the period 1920–1963. A minority group study conducted in 1962 and Commission policy files, 1938–1962, are proposed for permanent retention.

18. Office of Thrift Supervision, Office of Chief Counsel (N1–483–98–1, 55 items, 41 temporary items). Records of the Office of Chief Counsel relating to such matters as litigation and investigation cases lacking in significance, requests for documents, the activities of thrift institutions, the management of institutions that are in receivership, and ethics programs. These files also include records from the General Counsel of the OTS predecessor agency Federal Home Loan Bank Board. Also included is a management information system used to track assignments within the Chief Counsel's Office as well as electronic copies of documents created using electronic mail and word processing. Proposed for permanent retention are record-keeping copies of such files as the Chief Counsel's correspondence, Chief Counsel policies and procedures, legislative history and legislative reference files, significant litigation and enforcement investigation cases, and enforcement actions.

19. Commission on the Advancement of Federal Law Enforcement, Agency-wide (N1–220–00–1, 4 items, 2 temporary items). Surveys and questionnaire responses completed by Federal law enforcement agencies selected by the Commission and electronic copies of records created using electronic mail and word processing. Files relating to Commission meetings, speeches, and Commission publications, including its final report, are proposed for permanent retention.

20. Panama Canal Commission, Agency-wide (N1–185–97–21, 15 items, 15 temporary items). Electronic and paper records used in the preparation, production, modification, tracking, and control of architectural and engineering drawings. Drawings of significant structures were previously approved for permanent retention.

21. United States Agency for International Development, Office of the Inspector General (N1–286–99–3, 4 items, 4 temporary items). Records relating to Office of Inspector General audits, audit recommendation followup activities, and subject files of the Office. Also included are electronic copies of documents created using electronic mail and word processing.

Dated: November 2, 1999.

Michael J. Kurtz,

Assistant Archivist for Record Services—Washington, DC.

[FR Doc. 99–29789 Filed 11–15–99; 8:45 am]

BILLING CODE 7515–01–P

NATIONAL ARCHIVES AND RECORDS ADMINISTRATION

Records Schedules for Electronic Copies Previously Covered by General Records Schedule 20; Availability and Request for Comments

AGENCY: National Archives and Records Administration, Office of Records Services—Washington, DC.

ACTION: Notice of availability of proposed records schedules; request for comments.

SUMMARY: The National Archives and Records Administration (NARA) publishes notice at least once monthly of certain Federal agency requests for records disposition authority (records schedules). Once approved by NARA, records schedules provide mandatory instructions on what happens to records when no longer needed for current Government business. They authorize the preservation of records of continuing value in the National Archives of the United States and the destruction, after a specified period, of records lacking administrative, legal, research, or other value. Notice is published for records schedules in which agencies propose to destroy records not previously authorized for disposal or reduce the retention period of records already authorized for disposal.

This request for comments pertains solely to schedules for electronic copies of records created using word processing and electronic mail where the recordkeeping copies are already scheduled. (Electronic copies are records created using word processing or electronic mail software that remain in storage on the computer system after the recordkeeping copies are produced.)

These records were previously approved for disposal under General Records Schedule 20, Items 13 and 14. Pursuant to NARA Bulletin 99–04, agencies must submit schedules for the electronic copies associated with program records and administrative records not covered by the General Records Schedules. NARA invites public comments on such records schedules, as required by 44 U.S.C. 3303a(a). To facilitate review of these schedules, their availability for comment is announced in **Federal**

Register notices separate from those used for other records disposition schedules.

DATES: Requests for copies must be received in writing on or before January 3, 2000. On request, NARA will send a copy of the schedule. NARA staff usually prepare appraisal memorandums concerning a proposed schedule. These, too, may be requested. Requesters will be given 30 days to submit comments.

Some schedules submitted in accordance with NARA Bulletin 99–04 group records by program, function, or organizational element. These schedules do not include descriptions at the file series level, but, instead, provide citations to previously approved schedules or agency records disposition manuals (see **SUPPLEMENTARY INFORMATION** section of this notice). To facilitate review of such disposition requests, previously approved schedules or manuals that are cited may be requested in addition to schedules for the electronic copies. NARA will provide the first 100 pages at no cost. NARA may charge $.20 per page for additional copies. These materials also may be examined at no cost at the National Archives at College Park (8601 Adelphi Road, College Park, MD).

ADDRESSES: To request a copy of any records schedule identified in this notice, write to the Life Cycle Management Division (NWML), National Archives and Records Administration (NARA), 8601 Adelphi Road, College Park, MD 20740–6001. Requests also may be transmitted by FAX to 301–713–6852 or by e-mail to records.mgt@arch2.nara.gov.

Requesters must cite the control number, which appears in parentheses after the name of the agency which submitted the schedule, and must provide a mailing address. Those who desire appraisal reports and/or copies of previously approved schedules or manuals should so indicate in their request.

FOR FURTHER INFORMATION CONTACT: Marie Allen, Director, Life Cycle Management Division (NWML), National Archives and Records Administration, 8601 Adelphi Road, College Park, MD 20740–6001. Telephone: (301) 713–7110. E-mail: records.mgt@arch2.nara.gov.

SUPPLEMENTARY INFORMATION: Each year Federal agencies create billions of records on paper, film, magnetic tape, and other media. To control this accumulation, agency records managers prepare schedules proposing retention periods for records and submit these schedules for NARA approval, using the Standard Form (SF) 115, Request for Records Disposition Authority. These schedules provide for the timely transfer into the National Archives of historically valuable records and authorize the disposal of all other records after the agency no longer needs the records to conduct its business. Routine administrative records common to most agencies are approved for disposal in the General Records Schedules (GRS), which are disposition schedules issued by NARA that apply Government-wide.

In the past, NARA approved the disposal of electronic copies of records created using electronic mail and word processing via General Records Schedule 20, Items 13 (word processing documents) and 14 (electronic mail). However, NARA has determined that a different approach to the disposition of electronic copies is needed. In 1998, the Archivist of the United States established an interagency Electronic Records Work Group to address this issue and pursuant to its recommendations, decided that agencies must submit schedules for the electronic copies of program records and administrative records not covered by the GRS. On March 25, 1999, the Archivist issued NARA Bulletin 99–04, which tells agencies what they must do to schedule electronic copies associated with previously scheduled program records and certain administrative records that were previously scheduled under GRS 20, Items 13 and 14.

Schedules submitted in accordance with NARA Bulletin 99–04 only cover the electronic copies associated with previously scheduled series. Agencies that wish to schedule hitherto unscheduled series must submit separate SF 115s that cover both recordkeeping copies and electronic copies used to create them.

In developing SF 115s for the electronic copies of scheduled records, agencies may use either of two scheduling models. They may add an appropriate disposition for the electronic copies formerly covered by GRS 20, Items 13 and 14, to every item in their manuals or records schedules where the recordkeeping copy has been created with a word processing or electronic mail application. This approach is described as Model 1 in Bulletin 99–04. Alternatively, agencies may group records by program, function, or organizational component and propose disposition instructions for the electronic copies associated with each grouping. This approach is described as Model 2 in the Bulletin. Schedules that follow Model 2 do not describe records at the series level.

For each schedule covered by this notice the following information is provided: name of the Federal agency and any subdivisions requesting disposition authority; the organizational unit(s) accumulating the records or a statement that the schedule has agency-wide applicability in the case of schedules that cover records that may be accumulated throughout an agency; the control number assigned to each schedule; the total number of schedule items; the number of temporary items (the record series proposed for destruction); a brief description of the temporary electronic copies; and citations to previously approved SF 115s or printed disposition manuals that scheduled the recordkeeping copies associated with the electronic copies covered by the pending schedule. If a cited manual or schedule is available from the Government Printing Office or has been posted to a publicly available Web site, this too is noted.

Further information about the disposition process is available on request.

Schedules Pending

1. Department of Labor, Employees' Compensation Appeals Board (N9–86–00–01, 4 items, 4 temporary items). Electronic copies of records created using electronic mail and word processing that relate to official dockets, docket appellant indexes and logs, general administrative files, and the annual digest and decisions of the Board, which is published by the Government Printing Office. This schedule follows Model 1 as described in the **SUPPLEMENTARY INFORMATION** section of this notice. Recordkeeping copies of these files are included in Disposition Job No. NC1–386–81–1.

Dated: November 8, 1999.

Michael J. Kurtz,

Assistant Archivist for Record Services—Washington, DC.

[FR Doc. 99–29862 Filed 11–15–99; 8:45 am]

BILLING CODE 7515–01–P

NATIONAL CREDIT UNION ADMINISTRATION

Sunshine Act Meetings

TIME AND DATE: 10 a.m., Thursday, November 18, 1999.

PLACE Board Room, 7th Floor, Room 7047, 1775 Duke Street, Alexandria, Virginia 22314–3428.

STATUS: Open.

MATTERS TO BE CONSIDERED:

1. Survey of Credit Unions' Service to Low-Income Members.

2. Two (2) Requests from Federal Credit Unions to Convert to Community Charters.

3. Texas Member Business Loan Rule.

4. Advanced Notice of Proposed Rulemaking: Part 721, NCUA's Rules and Regulations, Federal Credit Union Insurance and Group Purchasing Activities.

5. Proposed Rule: Request for Comments, Part 745, NCUA's Rules and Regulations, Share Insurance and Appendix.

6. Interim Final Rule: Request for Comments, Part 707, NCUA's Rules and Regulations, Truth in Savings.

7. Final Rule: Amendment to Part 711, NCUA's Rules and Regulations, Management Interlocks Regulation.

8. Final Rule: Amendments to Part 712, NCUA's Rules and Regulations, Credit Union Service Organizations (CUSO).

9. NCUA's 2000/2001 Operating Budget.

RECESS: 11:15 a.m.

TIME AND DATE: 11:30 a.m., Thursday, November 18, 1999.

PLACE Board Room, 7th Floor, Room 7047, 1775 Duke Street, Alexandria, Virginia 22314–3428.

STATUS: Closed.

MATTERS TO BE CONSIDERED:

1. Administrative Action under Section 109 of the Federal Credit Union Act. Closed pursuant to exemption (8).

2. Administrative Action under Section 125 of the Federal Credit Union Act and Request for National Field of Membership. Closed pursuant to exemption (8).

3. Field of Membership Appeal. Closed pursuant to exemption (8).

4. One (1) Personnel Matter. Closed pursuant to exemptions (2) and (6).

FOR FURTHER INFORMATION CONTACT: Becky Baker, Secretary of the Board, Telephone (703) 518–6304.

Becky Baker,

Secretary of the Board.

[FR Doc. 99–29964 Filed 11–12–99; 10:06 am]

BILLING CODE 7535–01–M

NUCLEAR REGULATORY COMMISSION

Commowealth Edison Co.; Notice of Partial Denial of Amendment to Facility Operating License and Opportunity for Hearing

[Docket No. 50–373]

The U.S. Nuclear Regulatory Commission (the Commission) has partially denied a request by Commonwealth Edison Company (ComEd, the licensee), for an amendment to Facility Operating License No. NPF–11 issued to ComEd for operation of LaSalle County Station, Unit 1, located in LaSalle County, Illinois. Notice of Consideration of Issuance of this amendment was published in the **Federal Register** on August 11, 1999 (64 FR 43768).

The purpose of the licensee's amendment request was to revise Technical Specification (TS) Section 2.1 to reflect a change to the Minimum Critical Power Ratio and to add an NRC-approved Siemens Power Corporation methodology to the list of topical reports used to determine the core operating limits.

The NRC staff has concluded that the portion of the licensee's request to add a methodology to the list of topical reports in Section 6.6 of the TS can not be granted. The basis for the partial denial is detailed in the Safety Evaluation related to Amendment No. 137 dated November 9, 1999.

By December 16, 1999, the licensee may demand a hearing with respect to the partial denial described above. Any person whose interest may be affected by this proceeding may file a written petition for leave to intervene.

A request for hearing or petition for leave to intervene must be filed with the Secretary of the Commission, U.S. Nuclear Regulatory Commission, Washington, DC 20555–0001, Attention: Rulemakings and Adjudications Staff, or may be delivered to the Commission's Public Document Room, the Gelman Building, 2120 L Street, NW., Washington, DC, by the above date.

A copy of any petitions should also be sent to the Office of the General Counsel, U.S. Nuclear Regulatory Commission, Washington, DC 20555–0001, and to Ms. Pamela Stroebel, Commonwealth Edison Company, PO Box 767, Chicago, Illinois 60690–0767.

For further details with respect to this action, see (1) the application for amendment dated July 7, 1999, as supplemented on October 14, 1999, and (2) Amendment No. 137 to Facility Operating License No. NPF–11, and (3) the Commissions related Safety Evaluation.

These documents are available for public inspection at the Commission's Public Document Room, the Gelman Building, 2120 L Street, NW., Washington, DC, or are accessible electronically through the ADAMS Public Electronic Reading Room link at the NRC Web site (http://www.nrc.gov).

Dated at Rockville, Maryland, this 9th day of November, 1999.

For the Nuclear Regulatory Commission.

Anthony J. Mendiola,

Acting Director, Project Directorate III, Division of Licensing Project Management, Office of Nuclear Reactor Regulation.

[FR Doc. 99–29842 Filed 11–15–99; 8:45 am]

BILLING CODE 7590–01–P

NUCLEAR REGULATORY COMMISSION

[Docket No. 40–8778]

Notice of Consideration of Amendment Request for Molycorp, Washington, Pennsylvania and Opportunity for a Hearing

The U.S. Nuclear Regulatory Commission (NRC) is considering issuance of a license amendment to Source Material License No. SMB–1393 issued to Molycorp, Inc. (the licensee), to authorize decommissioning of its former processing facility in Washington, Pennsylvania.

The licensee initially submitted a Site Decommissioning Plan (SDP) for the Washington, PA, facility on August 14, 1995. Decommissioning criteria in effect at the time the SDP was submitted were contained in NRC's ''Action Plan to Ensure Timely Clean up of Site Decommissioning Management Plan Sites'' (Action Plan) (57 FR 13389 dated April 16, 1992). The SDP proposed a modification to the Action Plan criteria for application at the Washington facility. Contaminated portions of the facility would be remediated to this modified criteria and be disposed of in a disposal cell on another portion of Molycorp's property. NRC subsequently published its license termination rule (Radiological Criteria for License Termination (LTR), 10 CFR part 20 subpart E) in 1997. The LTR allows a ''grandfathering'' period (10 CFR 20.1401(b)(3)) for licensees proposing Action Plan criteria in SDPs submitted prior to August 20, 1998. In a letter dated February 16, 1999, NRC staff informed Molycorp that because the criteria proposed in the 1995 SDP were not consistent with the Action Plan, the conditions that would permit remediation of certain areas of the site on a grandfathered basis had not been met. On June 1, 1999, the licensee proposed that the SDP would be resubmitted in two parts, with Part 1 pertaining to remediation in accordance with Action Plan criteria and Part 2 detailing the disposition of materials that exceed levels in the Action Plan. A meeting was held between NRC staff and Molycorp on June 15, 1999, to discuss this matter. At this meeting, NRC stated that if a revised SDP,

adopting the Action Plan criteria (for that portion of the facility to be released for unrestricted use), was submitted by June 30, 1999, NRC staff would consider such a plan as meeting the requirements of 10 CFR 20.1401(b)(3). Such an SDP was submitted by Molycorp on June 30, 1999. An NRC administrative review, documented in a letter to Molycorp dated October 19, 1999, found the SDP acceptable to begin a technical review.

Prior to approving the SDP, NRC will make findings required by the Atomic Energy Act of 1954, as amended, and NRC's regulations that the SDP complies with all applicable requirements and is protective of the public health and safety and the environment. These findings will be documented in a Safety Evaluation Report and an Environmental Assessment. Approval of the SDP will be documented in an amendment to NRC License No. SMB–1393.

NRC hereby provides notice that this is a proceeding on an application for an amendment of a license falling within the scope of Subpart L, ''Informal Hearing Procedures for Adjudication in Materials Licensing Proceedings,'' of NRC's rules and practice for domestic licensing proceedings in 10 CFR Part 2. Pursuant to § 2.1205(a), any person whose interest may be affected by this proceeding may file a request for a hearing in accordance with § 2.1205(d). A request for a hearing must be filed within thirty (30) days of the date of publication of this **Federal Register** notice.

The request for a hearing must be filed with the Office of the Secretary either:

1. By delivery to Secretary, U.S. Nuclear Regulatory Commission, One White Flint North, 11555 Rockville Pike, Rockville, MD 20852–2738, between 7:45 a.m. and 4:15 p.m., Federal workdays; or
2. By mail, telegram, or facsimile addressed to the Secretary, U.S. Nuclear Regulatory Commission, Washington, DC 20555–0001. Attention: Rulemakings and Adjudications Staff.

In accordance with 10 CFR 2.1205(f), each request for a hearing must also be served, by delivering it personally or by mail, to:

1. The applicant, Molycorp Incorporated, 300 Caldwell Avenue, Washington, Pennsylvania 15301, Attention: Mr. John Daniels, and;
2. The NRC staff, by delivery to the Executive Director for Operations, U.S. Nuclear Regulatory Commission, One White Flint North, 11555 Rockville Pike, Rockville, MD 20852–2738, between 7:45 am and 4:15 p.m., Federal workdays, or by mail, addressed to Executive Director for Operations, U.S. Nuclear Regulatory Commission, Washington, DC 20555–0001.

In addition to meeting other applicable requirements of 10 CFR Part 2 of NRC's regulations, a request for a hearing filed by a person other than an applicant must describe in detail:

1. The interest of the requester in the proceeding;
2. How that interest may be affected by the results of the proceeding, including the reasons why the requester should be permitted a hearing, with particular reference to the factors set out in § 2.1205(h);
3. The requester's areas of concern about the licensing activity that is the subject matter of the proceeding; and
4. The circumstances establishing that the request for a hearing is timely in accordance with § 2.1205(d).

For further details with respect to this action the application for amendment and supporting documentation are available for inspection at NRC's Public Document Room, 2120 L Street NW., Washington, DC 20555–0001.

FOR FURTHER INFORMATION CONTACT: LeRoy Person, Decommissioning Branch, Division of Waste Management, Office of Nuclear Material Safety and Safeguards, U.S. Nuclear Regulatory Commission, Washington, DC 20555–0001. Telephone: (301) 415–6701, Fax: (301) 415–5398.

Dated at Rockville, Maryland, this 5th day of November 1999.

For the Nuclear Regulatory Commission.

Larry W. Camper,

Chief, Decommissioning Branch, Division of Waste Management, Office of Nuclear Material Safety and Safeguards.

[FR Doc. 99–29839 Filed 11–15–99; 8:45 am]

BILLING CODE 7590–01–P

NUCLEAR REGULATORY COMMISSION

[Docket No. 50–410]

Niagara Mohawk Power Corporation; Notice of Consideration of Issuance of Amendment to Facility Operating License, Proposed No Significant Hazards Consideration Determination, and Opportunity For a Hearing

The U.S. Nuclear Regulatory Commission (the Commission) is considering issuance of an amendment to Facility Operating License No. NPF–69 issued to Niagara Mohawk Power Corporation (the licensee) for operation of the Nine Mile Point Nuclear Station, Unit 2 (NMP2), located in the town of Scriba, Oswego County, New York.

The proposed amendment would change ACTION statement ''d'' of Technical Specification (TS) 3.6.1.2, titled ''Primary Containment Leakage,'' and ACTION statement ''b'' of TS 3.6.1.7, titled ''Primary Containment Purge System,'' to allow an alternative approach to the existing requirements contained in these statements. The alternative approach would allow isolation of a bypass leakage path and/or a purge system line by use of one closed and de-activated automatic valve, closed manual valve, or blind flange in lieu of restoring inoperable isolation valve(s) on TS Table 3.6.1.2–1, titled ''Allowable Leak Rates Through Valves in Potential Bypass Leakage Paths,'' and/or isolation valve(s) listed in Limiting Condition for Operation (LCO) 3.6.1.7, titled ''Primary Containment Purge System'' to OPERABLE status. Consistent with the alternative approach provided in these ACTION statements, changes are also proposed for Definition 1.31, titled ''Primary Containment Integrity'' and footnote (*) of Table 3.6.1.2–1, titled ''Allowable Leak Rates Through Valves in Potential Bypass Leakage Paths.'' The proposed changes affect valves that are purge system line isolation valves with resilient seals and/or isolation valves for potential bypass leakage paths. The proposed alternative is consistent with NUREG–1434, the Improved Standard Technical Specifications.

Before issuance of the proposed license amendment, the Commission will have made findings required by the Atomic Energy Act of 1954, as amended (the Act) and the Commission's regulations.

The Commission has made a proposed determination that the amendment request involves no significant hazards consideration. Under the Commission's regulations in 10 CFR 50.92, this means that operation of the facility in accordance with the proposed amendment would not (1) involve a significant increase in the probability or consequences of an accident previously evaluated; or (2) create the possibility of a new or different kind of accident from any accident previously evaluated; or (3) involve a significant reduction in a margin of safety. As required by 10 CFR 50.91(a), the licensee has provided its analysis of the issue of no significant hazards consideration, which is presented below:

1. The operation of Nine Mile Point Unit 2, in accordance with the proposed amendment, will not involve a significant increase in the probability or consequences of an accident previously evaluated.

The proposed change to the ACTION statements of Specifications 3.6.1.2 and 3.6.1.7 and Definition 1.31.d will allow continued operation if a potential bypass leakage path and/or a purge system line is reduced within leakage limits by one closed and de-activated automatic valve, closed manual valve, or blind flange. The proposed change to the ACTION statements also addresses the effects of isolating a bypass leakage path and/or a purge system line by requiring entry into applicable ACTION statements for the affected LCOs. Since these isolation provisions and their affects on other plant systems are not assumed to be initiators of any design basis accident or transient, this change does not involve a significant increase in the probability of an accident previously evaluated.

The isolation barrier would continue to satisfy the applicable leakage requirements for purge valves with resilient seals, potential bypass leakage pathways and LCO 3.6.1.2. Operation of the unit would reflect the limitations imposed by entry into applicable ACTION statements for LCOs affected by isolation of a bypass leakage path and/or a purge system line. Therefore, the radiological consequences of the proposed change to the ACTION statements are not increased when compared to the current licensing basis of NMP2. Accordingly, this change does not involve a significant increase in the consequences of an accident previously evaluated.

The proposed change to footnote (*) of Table 3.6.1.2–1 would allow the leakage rate through a penetration flow path to be the actual pathway leakage in lieu of the maximum pathway leakage, provided the penetration is isolated by one closed and de-activated automatic valve, closed manual valve, or blind flange. Since [neither] an isolated penetration nor the leakage through the isolated penetration is assumed to be the initiator of an accident, this change does not involve a significant increase in the probability of an accident previously evaluated.

While the leakage through an individual valve in a penetration can be exceeding the leakage assumed in the accident analysis, the penetration is isolated by a single active failure proof method; thus the leakage through the isolated penetration is the actual leakage through the valve or blind flange used to isolate the penetration, not the leakage through the valve with the maximum leakage. The leakage of the affected isolated penetration when combined with remaining applicable potential bypass leakage paths will continue to satisfy the leakage limits of 3.6 SCFH [standard cubic feet per hour] as stated in footnote (*) and the applicable leakage limit(s) of LCO 3.6.1.2. Therefore, this change does not involve a significant increase in the consequences of an accident previously evaluated.

2. The operation of Nine Mile Point Unit 2, in accordance with the proposed amendment, will not create the possibility of a new or different kind of accident from any accident previously evaluated.

The proposed change does not introduce any new failure modes. The proposed change allows the use of isolation barriers that cannot be adversely affected by a single active failure such as a closed and de-activated automatic valve, closed manual valve, or blind flange. These isolation barriers are not affected by a single failure since they do not have to change state to perform their safety function. A valve which contains resilient seals that isolates a purge system line would continue to be leak tested on a periodic basis to provide early indication of resilient material seal degradation. Therefore, since the proposed change ensures that the containment boundary, isolation of potential bypass leakage paths and isolation of purge system lines with a valve that contains resilient seals is maintained by appropriate methods and appropriate ACTION(s) are entered for applicable LCOs, operation with this proposed change will not create the possibility of a new or different kind of accident from any accident previously evaluated.

3. The operation of Nine Mile Point Unit 2, in accordance with the proposed amendment, will not involve a significant reduction in a margin of safety.

This change ensures that the safety function of the primary containment and its associated bypass leakage paths and/or purge system lines is maintained and the affects of the isolation approach are properly addressed by entering applicable ACTION statements. The isolation approach which includes one closed and de-activated automatic valve, closed manual valve, or blind flange will isolate bypass leakage paths and/or purge system lines to ensure leakage is within limits and cannot be adversely affected by a single active failure. Furthermore, a benefit is gained by reducing unnecessary plant shutdown transients when compensatory measures exist to ensure that the containment boundary, isolation of potential bypass leakage paths and isolation of purge system lines with a valve that contains resilient seals is maintained. Therefore, operation in accordance with the proposed amendment will not involve a significant reduction in a margin of safety.

The NRC staff has reviewed the licensee's analysis and, based on this review, it appears that the three standards of 10 CFR 50.92(c) are satisfied. Therefore, the NRC staff proposes to determine that the amendment request involves no significant hazards consideration.

The Commission is seeking public comments on this proposed determination. Any comments received within 30 days after the date of publication of this notice will be considered in making any final determination.

Normally, the Commission will not issue the amendment until the expiration of the 30-day notice period. However, should circumstances change during the notice period such that failure to act in a timely way would result, for example, in derating or shutdown of the facility, the Commission may issue the license amendment before the expiration of the 30-day notice period, provided that its final determination is that the amendment involves no significant hazards consideration. The final determination will consider all public and State comments received. Should the Commission take this action, it will publish in the **Federal Register** a notice of issuance and provide for opportunity for a hearing after issuance. The Commission expects that the need to take this action will occur very infrequently.

Written comments may be submitted by mail to the Chief, Rules and Directives Branch, Division of Administrative Services, Office of Administration, U.S. Nuclear Regulatory Commission, Washington, DC 20555–0001, and should cite the publication date and page number of this **Federal Register** notice. Written comments may also be delivered to Room 6D59, Two White Flint North, 11545 Rockville Pike, Rockville, Maryland, from 7:30 a.m. to 4:15 p.m. Federal workdays. Copies of written comments received may be examined at the NRC Public Document Room, the Gelman Building, 2120 L Street, NW., Washington, DC.

The filing of requests for hearing and petitions for leave to intervene is discussed below.

By December 16, 1999, the licensee may file a request for a hearing with respect to issuance of the amendment to the subject facility operating license and any person whose interest may be affected by this proceeding and who wishes to participate as a party in the proceeding must file a written request for a hearing and a petition for leave to intervene. Requests for a hearing and a petition for leave to intervene shall be filed in accordance with the Commission's ''Rules of Practice for Domestic Licensing Proceedings'' in 10 CFR part 2. Interested persons should consult a current copy of 10 CFR 2.714 which is available at the Commission's Public Document Room, the Gelman Building, 2120 L Street, NW., Washington, DC, and accessible electronically through the ADAMS Public Electronic Reading Room link at the NRC Web site (http://www.nrc.gov). If a request for a hearing or petition for leave to intervene is filed by the above date, the Commission or an Atomic Safety and Licensing Board, designated by the Commission or by the Chairman of the Atomic Safety and Licensing Board Panel, will rule on the request and/or petition; and the Secretary or the designated Atomic Safety and Licensing Board will issue a notice of hearing or an appropriate order.

As required by 10 CFR 2.714, a petition for leave to intervene shall set forth with particularity the interest of the petitioner in the proceeding, and how that interest may be affected by the results of the proceeding. The petition should specifically explain the reasons why intervention should be permitted with particular reference to the following factors: (1) The nature of the petitioner's right under the Act to be made party to the proceeding; (2) the nature and extent of the petitioner's property, financial, or other interest in the proceeding; and (3) the possible effect of any order which may be entered in the proceeding on the petitioner's interest. The petition should also identify the specific aspect(s) of the subject matter of the proceeding as to which petitioner wishes to intervene. Any person who has filed a petition for leave to intervene or who has been admitted as a party may amend the petition without requesting leave of the Board up to 15 days prior to the first prehearing conference scheduled in the proceeding, but such an amended petition must satisfy the specificity requirements described above.

Not later than 15 days prior to the first prehearing conference scheduled in the proceeding, a petitioner shall file a supplement to the petition to intervene which must include a list of the contentions which are sought to be litigated in the matter. Each contention must consist of a specific statement of the issue of law or fact to be raised or controverted. In addition, the petitioner shall provide a brief explanation of the bases of the contention and a concise statement of the alleged facts or expert opinion which support the contention and on which the petitioner intends to rely in proving the contention at the hearing. The petitioner must also provide references to those specific sources and documents of which the petitioner is aware and on which the petitioner intends to rely to establish those facts or expert opinion. Petitioner must provide sufficient information to show that a genuine dispute exists with the applicant on a material issue of law or fact. Contentions shall be limited to matters within the scope of the amendment under consideration. The contention must be one which, if proven, would entitle the petitioner to relief. A petitioner who fails to file such a supplement which satisfies these requirements with respect to at least one contention will not be permitted to participate as a party.

Those permitted to intervene become parties to the proceeding, subject to any limitations in the order granting leave to intervene, and have the opportunity to participate fully in the conduct of the hearing, including the opportunity to present evidence and cross-examine witnesses.

If a hearing is requested, the Commission will make a final determination on the issue of no significant hazards consideration. The final determination will serve to decide when the hearing is held.

If the final determination is that the amendment request involves no significant hazards consideration, the Commission may issue the amendment and make it immediately effective, notwithstanding the request for a hearing. Any hearing held would take place after issuance of the amendment.

If the final determination is that the amendment request involves a significant hazards consideration, any hearing held would take place before the issuance of any amendment.

A request for a hearing or a petition for leave to intervene must be filed with the Secretary of the Commission, U.S. Nuclear Regulatory Commission, Washington, DC 20555–0001, Attention: Rulemakings and Adjudications Staff, or may be delivered to the Commission's Public Document Room, the Gelman Building, 2120 L Street, NW., Washington, DC, by the above date. A copy of the petition should also be sent to the Office of the General Counsel, U.S. Nuclear Regulatory Commission, Washington, DC 20555–0001, and to Mark J. Wetterhahn, Esquire, Winston & Strawn, 1400 L Street, NW, Washington, DC 20005–3502, attorney for the licensee.

Nontimely filings of petitions for leave to intervene, amended petitions, supplemental petitions and/or requests for hearing will not be entertained absent a determination by the Commission, the presiding officer or the presiding Atomic Safety and Licensing Board that the petition and/or request should be granted based upon a balancing of the factors specified in 10 CFR 2.714(a)(1)(i)–(v) and 2.714(d).

For further details with respect to this action, see the application for amendment dated November 8, 1999, which is available for public inspection at the Commission's Public Document Room, the Gelman Building, 2120 L Street, NW., Washington, DC, and accessible electronically through the ADAMS Public Electronic Reading Room link at the NRC Web site (http://www.nrc.gov).

Dated at Rockville, Maryland, this 9th day of November, 1999.

For the Nuclear Regulatory Commission.

Darl S. Hood, Sr.,

Project Manager, Section 1, Project Directorate I, Division of Licensing Project Management, Office of Nuclear Reactor Regulation.

[FR Doc. 99–29845 Filed 11–15–99; 8:45 am]

BILLING CODE 7590–01–P

NUCLEAR REGULATORY COMMISSION

[Docket No. 50–423]

Northeast Nuclear Energy Company, et al., Millstone Nuclear Power Station, Unit 3, Notice of Consideration of Approval of Application Regarding Proposed Corporate Merger and Opportunity for a Hearing

The U.S. Nuclear Regulatory Commission (the Commission) is considering the issuance of an order under 10 CFR 50.80 approving the indirect transfer of Facility Operating License No. NPF–49 for the Millstone Nuclear Power Station, Unit No. 3 (Millstone Unit 3), to the extent held by Central Maine Power Company (Central Maine), one of 13 joint owners of Millstone Unit 3. The indirect transfer would be to Energy East Corporation (Energy East) resulting from the planned acquisition by Energy East of CMP Group, Inc., the parent holding company of Central Maine.

According to the October 6, 1999, application by Central Maine for approval of the indirect transfer, on June 14, 1999, CMP Group, Inc., and Energy East signed a definitive agreement for the acquisition of CMP Group, Inc., by Energy East, subject to regulatory approvals. To accomplish the acquisition, EE Merger Corp., a Maine corporation that is a wholly-owned subsidiary of Energy East, will merge with and into CMP Group, Inc., with CMP Group, Inc., being the surviving corporation. Upon completion of the acquisition, CMP Group, Inc., will become a wholly-owned subsidiary of Energy East. In the event the Securities and Exchange Commission does not permit Energy East to maintain CMP Group, Inc., as an intermediate holding company under the provisions of the Public Utility Holding Company Act of 1935, as amended, Energy East would hold Central Maine directly. Northeast Utilities, the sole licensed operator of the facility, would remain as the managing agent for the 13 joint owners of the facility and would continue to have exclusive responsibility for the management, operation, and maintenance of Millstone Unit 3. The application does not propose a change

in the rights, obligations, or interests of the other joint owners of Millstone Unit 3. In addition, no physical changes to Millstone Unit 3 or operational changes are being proposed. No direct transfer of the license will result from the proposed merger.

Pursuant to 10 CFR 50.80, no license, or any right thereunder, shall be transferred, directly or indirectly, through transfer of control of the license, unless the Commission shall give its consent in writing. The Commission will approve an application for the indirect transfer of a license, if the Commission determines that the proposed transfer of control will not affect the qualifications of the holder of the license, and that the transfer is otherwise consistent with applicable provisions of law, regulations, and orders issued by the Commission pursuant thereto.

The filing of requests for hearing and petitions for leave to intervene, and written comments regarding the license transfer application, are discussed below.

By December 6, 1999, any person whose interest may be affected by the Commission's action on the application may request a hearing, and, if not the applicants, may petition for leave to intervene in a hearing proceeding on the Commission's action. Requests for a hearing and petitions for leave to intervene should be filed in accordance with the Commission's rules of practice set forth in Subpart M, ''Public Notification, Availability of Documents and Records, Hearing Requests and Procedures for Hearings on License Transfer Applications,'' of 10 CFR part 2. In particular, such requests and petitions must comply with the requirements set forth in 10 CFR 2.1306, and should address the considerations contained in 10 CFR 2.1308(a). Untimely requests and petitions may be denied, as provided in 10 CFR 2.1308(b), unless good cause for failure to file on time is established. In addition, an untimely request or petition should address the factors that the Commission will also consider, in reviewing untimely requests or petitions, set forth in 10 CFR 2.1308(b)(1)–(2).

Requests for a hearing and petitions for leave to intervene should be served upon Arthur H. Domby, Esq., Troutman Sanders LLP, Nations Bank Plaza, 600 Peachtree Street, N.E., Suite 5200, Atlanta, Georgia, 30308–2216, attorney for Central Maine; Lillian M. Cuoco, Esq., Senior Nuclear Counsel, Northeast Utilities Service Company, 107 Selden Street, Berlin, Connecticut, 06037, attorney for Northeast Nuclear Energy Company; the General Counsel, U.S. Nuclear Regulatory Commission, Washington, DC 20555 (e-mail address for filings regarding license transfer cases only: OGCLT@NRC.gov); and the Secretary of the Commission, U.S. Nuclear Regulatory Commission, Washington, DC 20555–0001, Attention: Rulemakings and Adjudications Staff, in accordance with 10 CFR 2.1313.

The Commission will issue a notice or order granting or denying a hearing request or intervention petition, designating the issues for any hearing that will be held and designating the Presiding Officer. A notice granting a hearing will be published in the **Federal Register** and served on the parties to the hearing.

As an alternative to requests for hearing and petitions to intervene, by December 16, 1999, persons may submit written comments regarding the license transfer application, as provided for in 10 CFR 2.1305. The Commission will consider and, if appropriate, respond to these comments, but such comments will not otherwise constitute part of the decisional record. Comments should be submitted to the Secretary, U.S. Nuclear Regulatory Commission, Washington, DC 20555–0001, Attention: Rulemakings and Adjudications Staff, and should cite the publication date and page number of this **Federal Register** notice.

For further details with respect to this action, see the application dated October 6, 1999, which is available for public inspection at the Commission's Public Document Room, the Gelman Building, 2120 L Street, NW., Washington, DC and electronically on the NRC's web site *http://www.nrc.gov*. (the Public Electronic Reading Room).

For the Nuclear Regulatory Commission.

Dated at Rockville, Maryland this 9th day of November, 1999.

John A. Nakoski, Sr.,

Project Manager, Section 2, Project Directorate I, Division of Licensing Project Management, Office of Nuclear Reactor Regulation.

[FR Doc. 99–29844 Filed 11–15–99; 8:45 am]

BILLING CODE 7590–01–P

NUCLEAR REGULATORY COMMISSION

[Docket No. 50–482]

Wolf Creek Nuclear Operating Corporation; Notice of Consideration of Issuance of Amendment to Facility Operating License, Proposed No Significant Hazards Consideration Determination, and Opportunity for a Hearing

The U.S. Nuclear Regulatory Commission (the Commission) is considering issuance of an amendment to Facility Operating License No. NPF–42 issued to Wolf Creek Nuclear Operating Corporation (the licensee) for operation of the Wolf Creek Generating Station (WCGS) located in Coffey County, Kansas.

The proposed amendment request dated November 8, 1999, would revise several sections of the Improved Technical Specification (ITSs) to correct 15 editorial errors made in the application dated May 15, 1997 (and supplementary letters) for the ITSs or in the certified copy of the ITSs that was submitted in the licensee's letter of March 26, 1999. The ITSs were issued by the staff's letter of March 31, 1999, and will be implemented to replace the current TSs by December 31, 1999. The licensee has also requested four corrections to Table LG, ''Details Relocated from Current Technical Specifications,'' that was attached to the safety evaluation that supported the issuance of the ITS.

The proposed changes to the ITSs are the following.

(1) The correct abbreviation in the table of contents, page ii, Section 3.3.7, is ''CREVS'' instead of ''CREFS''.

(2) The correct reference to an action condition of the limiting condition for operation (LCO) in Surveillance Requirement (SR) 3.6.3.1 is ''Condition D'' instead of ''Condition C,'' on ITS page 3.6–12.

(3) The logical connector ''and'' between the E.1 and E.2 required actions for LCO 3.7.10 is being correctly located on ITS page 3.7–22.

(4) The correct reference to a penetration in SR 3.9.4.1 is ''P–98'' instead of ''P–68,'' on ITS page 3.9–6.

(5) The correct reference to a standard in ITS 5.5.11.e is ''ANSI'' instead of ''ASME,'' on ITS page 5.0–20.

(6) The word ''least'' is added to the definition of e-average disintegration energy on ITS page 1.1–3, which was in the application but was not included in the issued ITSs

(7) The font of the section headers on ITS pages 3.2–6, 3.2–7, and 3.2–8 is corrected.

(8) The allowable value with the columns for Function Unit 2.b on ITS page 3.3–15 of Table 3.3.1–1 is properly aligned.

(9) The correct header for the SRs on ITS page 3.3–29 is added.

(10) The word ''not'' is added to the LCO title header on the top of ITS pages 3.4–17 and 3.4–18, which was in the application but not in the ITS, to state the correct title as ''RCS Loops—MODE 5, Loops Not Filled''.

(11) The double line at the top of the actions table on ITS page 3.6–7 for LCO 3.6.3 is added to follow the ITS format.

(12) The spelling of the word ''enrichment'' is corrected, which was correctly spelled in the application but not in the issued ITSs, on ITS page 4.0–1 of ITS Section 4.3.1.1.a on fuel storage.

(13) The form of the verb ''grant'' is corrected from ''granted'' to ''granting,'' which was correct in the application but not in the issued ITSs, to have a correct sentence on ITS page 5.0–3 of Section 5.2.2.d, second paragraph, on unit staff requirements.

(14) The word ''emergency'' in the title ''Control Room emergency Ventilation System—Filtration,'' is capitalized which was capitalized correctly in the application but not capitalized in the issued ITSs, on ITS page 5.0–19 of Section 5.5.11.b on the Ventilation Filter Testing Program.

(15) A space between ''Manual'' and ''(ODCM)'' is placed to correctly have ''Manual (ODCM)'' instead of ''Manual(ODCM)'' in the sentence on ITS page 5.0–25 of the first paragraph of Section 5.6.2 on Annual Radiological Environmental Operating Report.

The proposed corrections to Table LG of the safety evaluation are the following.

(1) The information to be relocated for change number 8–08–LG on page 14 of the table will be relocated to the ITS Bases for SR 3.6.6.4 instead of the inservice testing (IST) program, and the change control process identified in the table will be corrected;

(2) The information to be relocated for change number 9–09–LG on page 18 of the table (requirements to perform an analog channel operational test) will be relocated to the updated safety analysis report (USAR) instead of the ITS Bases, and the change control process, and characterization of the information being relocated will be corrected;

(3) The information to be relocated for change number 10–26–LG on page 18 of the table will be relocated to the ITS Bases for SR 3.7.10.3 instead of the USAR, and the change control process will be corrected;

(4) The information to be relocated for change number 1–20–LG on page 19 of the table will be relocated to the ITS Bases instead of the USAR, and the change control process will be corrected.

The proposed changes to Table LG will affect the implementation of the ITSs that were issued on March 31, 1999, because a license condition issued with the ITSs required the relocation of information and requirements from the previous technical specifications in accordance with certain tables attached to the safety evaluation, including Table LG.

Before issuance of the proposed license amendment, the Commission will have made findings required by the Atomic Energy Act of 1954, as amended (the Act) and the Commission's regulations.

The Commission has made a proposed determination that the amendment request involves no significant hazards consideration. Under the Commission's regulations in 10 CFR 50.92, this means that operation of the facility in accordance with the proposed amendment would not (1) involve a significant increase in the probability or consequences of an accident previously evaluated; or (2) create the possibility of a new or different kind of accident from any accident previously evaluated; or (3) involve a significant reduction in a margin of safety. As required by 10 CFR 50.91(a), the licensee has provided its analysis of the issue of no significant hazards consideration, which is presented below:

1. The proposed amendment does not involve a significant increase in the probability or consequences of an accident previously evaluated.

The proposed changes involve corrections to the ITS that are associated with the original conversion application and supplements or the certified copy of the ITS. The changes are considered as administrative changes and do not modify, add, delete, or relocate any technical requirements of the Technical Specifications [not previously approved]. As such, the administrative changes do not effect initiators of analyzed events or assumed mitigation of accident or transient events. Therefore, this change does not involve a significant increase in the probability or consequences of an accident previously evaluated.

2. The proposed amendment does not create the possibility of a new or different kind of accident from any previously evaluated.

The proposed changes do not involve a physical alteration of the plant (no new or different kind of equipment will be installed) or changes in methods governing normal plant operation. The proposed changes will not impose any new or eliminate any old requirements. Thus, the changes do not create the possibility of a new or different kind of accident from any accident previously evaluated.

3. The proposed amendment does not involve a significant reduction in a margin of safety.

The proposed changes will not reduce a margin of safety because they have no effect on any safety analyses assumptions. The changes are administrative in nature. Therefore, the proposed changes do not involve a significant reduction in the margin of safety.

The NRC staff has reviewed the licensee's analysis and, based on this review, it appears that the three standards of 10 CFR 50.92(c) are satisfied. Therefore, the NRC staff proposes to determine that the amendment request involves no significant hazards consideration.

The Commission is seeking public comments on this proposed determination. Any comments received within 30 days after the date of publication of this notice will be considered in making any final determination.

Normally, the Commission will not issue the amendment until the expiration of the 30-day notice period. However, should circumstances change during the notice period such that failure to act in a timely way would result, for example, in derating or shutdown of the facility, the Commission may issue the license amendment before the expiration of the 30-day notice period, provided that its final determination is that the amendment involves no significant hazards consideration. The final determination will consider all public and State comments received. Should the Commission take this action, it will publish in the **Federal Register** a notice of issuance and provide for opportunity for a hearing after issuance. The Commission expects that the need to take this action will occur very infrequently.

Written comments may be submitted by mail to the Chief, Rules and Directives Branch, Division of Administrative Services, Office of Administration, U.S. Nuclear Regulatory Commission, Washington, DC 20555–0001, and should cite the publication date and page number of this **Federal Register** notice. Written comments may also be delivered to Room 6D59, Two White Flint North, 11545 Rockville Pike, Rockville, Maryland, from 7:30 a.m. to 4:15 p.m. Federal workdays. Copies of written comments received may be examined at the NRC Public Document Room, the Gelman Building, 2120 L Street, NW., Washington, DC.

The filing of requests for hearing and petitions for leave to intervene is discussed below.

By December 16, 1999, the licensee may file a request for a hearing with respect to issuance of the amendment to the subject facility operating license and any person whose interest may be affected by this proceeding and who wishes to participate as a party in the proceeding must file a written request for a hearing and a petition for leave to intervene. Requests for a hearing and a petition for leave to intervene shall be filed in accordance with the Commission's ''Rules of Practice for Domestic Licensing Proceedings'' in 10 CFR part 2. Interested persons should consult a current copy of 10 CFR 2.714 which is available at the Commission's Public Document Room, the Gelman Building, 2120 L Street, NW., Washington, DC, and accessible electronically from the ADAMS Public Library component on the NRC Web site, *http://www.nrc.gov* (the Electronic Reading Room). If a request for a hearing or petition for leave to intervene is filed by the above date, the Commission or an Atomic Safety and Licensing Board, designated by the Commission or by the Chairman of the Atomic Safety and Licensing Board Panel, will rule on the request and/or petition; and the Secretary or the designated Atomic Safety and Licensing Board will issue a notice of hearing or an appropriate order.

As required by 10 CFR 2.714, a petition for leave to intervene shall set forth with particularity the interest of the petitioner in the proceeding, and how that interest may be affected by the results of the proceeding. The petition should specifically explain the reasons why intervention should be permitted with particular reference to the following factors: (1) The nature of the petitioner's right under the Act to be made party to the proceeding; (2) the nature and extent of the petitioner's property, financial, or other interest in the proceeding; and (3) the possible effect of any order which may be entered in the proceeding on the petitioner's interest. The petition should also identify the specific aspect(s) of the subject matter of the proceeding as to which petitioner wishes to intervene. Any person who has filed a petition for leave to intervene or who has been admitted as a party may amend the petition without requesting leave of the Board up to 15 days prior to the first prehearing conference scheduled in the proceeding, but such an amended petition must satisfy the specificity requirements described above.

Not later than 15 days prior to the first prehearing conference scheduled in the proceeding, a petitioner shall file a supplement to the petition to intervene which must include a list of the contentions which are sought to be litigated in the matter. Each contention must consist of a specific statement of the issue of law or fact to be raised or controverted. In addition, the petitioner shall provide a brief explanation of the bases of the contention and a concise statement of the alleged facts or expert opinion which support the contention and on which the petitioner intends to rely in proving the contention at the hearing. The petitioner must also provide references to those specific sources and documents of which the petitioner is aware and on which the petitioner intends to rely to establish those facts or expert opinion. Petitioner must provide sufficient information to show that a genuine dispute exists with the applicant on a material issue of law or fact. Contentions shall be limited to matters within the scope of the amendment under consideration. The contention must be one which, if proven, would entitle the petitioner to relief. A petitioner who fails to file such a supplement which satisfies these requirements with respect to at least one contention will not be permitted to participate as a party.

Those permitted to intervene become parties to the proceeding, subject to any limitations in the order granting leave to intervene, and have the opportunity to participate fully in the conduct of the hearing, including the opportunity to present evidence and cross-examine witnesses.

If a hearing is requested, the Commission will make a final determination on the issue of no significant hazards consideration. The final determination will serve to decide when the hearing is held.

If the final determination is that the amendment request involves no significant hazards consideration, the Commission may issue the amendment and make it immediately effective, notwithstanding the request for a hearing. Any hearing held would take place after issuance of the amendment.

If the final determination is that the amendment request involves a significant hazards consideration, any hearing held would take place before the issuance of any amendment.

A request for a hearing or a petition for leave to intervene must be filed with the Secretary of the Commission, U.S. Nuclear Regulatory Commission, Washington, DC 20555-0001, Attention: Rulemakings and Adjudications Staff, or may be delivered to the Commission's Public Document Room, the Gelman Building, 2120 L Street, NW., Washington, DC, by the above date. A copy of the petition should also be sent to the Office of the General Counsel, U.S. Nuclear Regulatory Commission, Washington, DC 20555–0001, and to Jay Silberg, Esq., Shaw, Pittman, Potts and Trowbridge, 2300 N Street, NW., Washington, DC 20037, attorney for the licensee.

Nontimely filings of petitions for leave to intervene, amended petitions, supplemental petitions and/or requests for hearing will not be entertained absent a determination by the Commission, the presiding officer or the presiding Atomic Safety and Licensing Board that the petition and/or request should be granted based upon a balancing of the factors specified in 10 CFR 2.714(a)(1) (i)–(v) and 2.714(d).

For further details with respect to this action, see the application for amendment dated November 8, 1999, which is available for public inspection at the Commission's Public Document Room, the Gelman Building, 2120 L Street, NW., Washington, DC, and accessible electronically from the ADAMS Public Library component on the NRC Web site, *http://www.nrc.gov* (the Electronic Reading Room).

Dated at Rockville, Maryland, this 9th day of November, 1999.

For the Nuclear Regulatory Commission.

Jack N. Donohew,

Senior Project Manager, Section 2, Project Directorate IV and Decommissioning, Division of Licensing Project Management, Office of Nuclear Reactor Regulation.

[FR Doc. 99–29841 Filed 11–15–99; 8:45 am]

BILLING CODE 7590–01–P

NUCLEAR REGULATORY COMMISSION

[Docket No. 50–412]

Duquesne Light Co., Ohio Edison Co., Cleveland Electric Illuminating Co., Toledo Edison Co., Beaver Valley Power Station, Unit 2; Environmental Assessment and Finding of no Significant Impact

The U.S. Nuclear Regulatory Commission (the Commission) is considering issuance of an amendment to Facility Operating License No. NPF–73, issued to Duquesne Light Company (the licensee), for operation of the Beaver Valley Power Station, Unit 2 (BVPS–2), located in Beaver County, Pennsylvania.

Environmental Assessment

Identification of the Proposed Action

The proposed action would authorize changes to the Updated Final Safety Analysis Report (UFSAR) for the facility. Specifically, the proposed action would authorize changes to the UFSAR to reflect revisions to the radiological dose calculations for the locked rotor accident (LRA) analysis. The BVPS–2 UFSAR would be revised as follows: in Table 15.0–11, atmospheric dispersion values for the LRA analysis would be added; in Table 15.0–12, the Exclusion Area Boundary (EAB) thyroid dose would be revised from 32.5 REM to 37 REM, the EAB Gamma (whole body) dose would be revised from 3.41 REM to 3.6 REM, and the EAB Beta dose would be revised from 2.09 REM to 2.2 REM; in Table 15.0–12, the Low Population Zone (LPZ) thyroid dose would be revised from 14.4 REM to 16 REM, the LPZ Gamma dose would be revised from .348 REM to .36 REM, and the LPZ Beta dose would be revised from .217 REM to .23 REM; the control room dose for the LRA in Table 15.0–12 would be changed so that thyroid dose would be revised from 1.1 REM to 1.7 REM, Gamma dose would be revised from .011 REM to .016 REM, and the Beta dose would be revised from .15 REM to .23 REM; additionally, Table 15.3–3 would be revised to include control room ventilation flow rates assumed in the LRA analysis.

The proposed action is in accordance with the licensee's application for amendment dated January 29, 1998, as supplemented by letters dated November 9, 1998, and June 14, 1999.

The Need for the Proposed Action

As a result of issues involving control room habitability, the licensee re-evaluated Beaver Valley Power Station, Units 1 and 2 (BVPS–1 and BVPS–2) control room dose calculations for Design Basis Accidents (DBA) which credited isolation of the control room during DBA. When analyses associated with the BVPS–2 LRA were reviewed, the licensee identified the need to incorporate more conservative assumptions into the control room dose calculations as well as the calculations for the EAB and LPZ. Therefore, it is necessary to revise the analysis and the BVPS–2 UFSAR. Pursuant to 10 CFR part 50, Section 59, the licensee determined the proposed revisions to be an unreviewed safety question and requested NRC approval of the proposed changes.

The change is not the result of hardware changes to the plant or a change in operating practices. It reflects corrected analysis results only and allows correction of the licensing basis to reflect conservative assumptions used in the revised dose analysis for the LRA.

Environmental Impacts of the Proposed Action

The Commission has completed its evaluation of the proposed action and concludes that the assumptions and methodology used by the licensee in the reanalysis are acceptable and that there is reasonable assurance, in the event of a postulated LRA, that the postulated LPZ and EAB doses would continue to be well within the 10 CFR part 100 guidelines, and the control room operator doses would continue to be less than the 10 CFR part 50, appendix A, General Design Criterion 19 guidelines.

The proposed action will not significantly increase the probability or consequences of accidents (although the revisions result in slightly higher calculated doses for the EAB, LPZ, and control room as discussed above), no changes are being made in the types of any effluents that may be released off site, and there is no significant increase in occupational or public radiation exposure. Therefore, there are no significant radiological environmental impacts associated with the proposed action.

With regard to potential non-radiological impacts, the proposed action does not involve any historic sites. It does not affect non-radiological plant effluents and has no other environmental impact. Therefore, there are no significant non-radiological environmental impacts associated with the proposed action.

Accordingly, the Commission concludes that there are no significant environmental impacts associated with the proposed action.

Alternatives to the Proposed Action

As an alternative to the proposed action, the staff considered denial of the proposed action (*i.e.*, the ''no-action'' alternative). Denial of the application would result in no change in current environmental impacts. The environmental impacts of the proposed action and the alternative action are similar.

Alternative Use of Resources

This action does not involve the use of any resources not previously considered in the Final Environmental Statement for the BVPS–2.

Agencies and Persons Consulted

In accordance with its stated policy, on September 27,1999, the staff consulted with the Pennsylvania State official, Mr. M. Murphy of the Pennsylvania Department of Environmental Protection Bureau, Division of Nuclear Safety, regarding the environmental impact of the proposed action. The State official had no comments.

Finding of no Significant Impact

On the basis of the environmental assessment, the Commission concludes that the proposed action will not have a significant effect on the quality of the human environment. Accordingly, the Commission has determined not to prepare an environmental impact statement for the proposed action.

For further details with respect to the proposed action, see the licensee's letter dated January 29, 1998, as supplemented by letters dated November 9, 1998, and June 14, 1999, which are available for public inspection at the Commission's Public Document Room, The Gelman Building, 2120 L Street, NW., Washington, DC, and at the local public document room located at the B. F. Jones Memorial Library, 663 Franklin Avenue, Aliquippa, Pennsylvania.

Dated at Rockville, Maryland, this 9th day of November 1999.

For the Nuclear Regulatory Commission.

Daniel S. Collins,

Project Manager, Section 1, Project Directorate I, Division of Licensing Project Management, Office of Nuclear Reactor Regulation.

[FR Doc. 99–29840 Filed 11–15–99; 8:45 am]

BILLING CODE 7590–01–P

NUCLEAR REGULATORY COMMISSION

Public Workshop on License Renewal

AGENCY: Nuclear Regulatory Commission.

ACTION: Notice of public workshop.

SUMMARY: The Nuclear Regulatory Commission (NRC) has scheduled a public workshop to gather comments from stakeholders on programs for managing the effects of aging on nuclear power plants for license renewal. The agency is developing a Generic Aging Lessons Learned (GALL) report that will document the basis for determining when existing aging management programs are adequate and when they should be modified or augmented for license renewal.

DATES: December 6, 1999, from 8:00 a.m. to 5:00 p.m.

ADDRESSES: The workshop will be held in the NRC's Auditorium at Two White

Flint North, 11545 Rockville Pike, Rockville, Maryland 20852–2738.

FOR FURTHER INFORMATION, CONTACT: Raj Anand, Mail Stop O–12G15, U.S. Nuclear Regulatory Commission, Washington, DC 20555–0001. Telephone: 301–415–1146; Internet: rka@nrc.gov. If you are planning to attend the workshop, please notify Raj Anand.

SUPPLEMENTARY INFORMATION: The purpose of this workshop is to gather feedback on the NRC staff's plans to develop guidelines on which programs need to be augmented for renewal and which programs adequately manage effects without change. This issue is described in the Commission paper on Credit for Existing Programs for License Renewal, SECY 99–148 (Internet Link-http://www.nrc.gov/NRC/COMMISSION/SECYS/1999–148SCY.PDF). The Commission concluded that the NRC staff should develop a report on Generic Aging Lessons Learned (GALL), to generically document the bases for determining when existing programs are adequate and when existing programs should be augmented for license renewal. The GALL report would then be referenced in the standard review plan (SRP) for license renewal as the basis for identifying those programs that warrant attention during the staff's review of a license renewal application.

Following opening remarks by representatives of the NRC, the Nuclear Energy Institute (NEI) and the Union of Concerned Scientists (UCS), the NRC staff will explain how the workshop will be conducted and describe the current plans for GALL, the SRP, and the Regulatory Guide that would endorse an update of the NEI guide for preparing a license renewal application (NEI 95–10, Industry Guideline for Implementing the Requirements of 10 CFR part 54—The License Renewal Rule). With that background, the workshop participants will be engaged in discussion of the adequacy and attributes of examples of programs that are expected to be relied on to manage aging effects in three broad areas: Regulated Programs, Reactive Programs, and General Practice Programs. In closing, the NRC staff will solicit comments on the plan and respond to questions from the participants.

This workshop will be successful if the NRC can find areas of agreement on the attributes of adequate aging management programs for each of the three program areas. The participants will have an opportunity to comment on aging management programs, both generally and for specific programs. The participants will also have an opportunity to ask about the NRC's plans for license renewal reviews, and we will explain how to submit written comments for NRC consideration.

To ensure that all of the ideas raised are recorded, the workshop will be transcribed and the NRC staff will prepare a summary report to categorize the comments. This one-day session attempts to cover a wide range of views and aging management programs. If your organization is interested in expressing a view on this matter as part of the opening remarks, please coordinate with Doug Walters at NEI or Dave Lochbaum at UCS, as appropriate. The tentative agenda for the workshop is as follows:

License Renewal Workshop Agenda

December 6, 1999

8:00 a.m. Registration—TWFN Auditorium
8:30 a.m. Opening remarks by NRC
8:45 a.m. Opening remarks by the Nuclear Energy Institute (NEI)
9:00 a.m. Opening remarks by the Union of Concerned Scientists (UCS)
9:15 a.m. Introduction of workshop purpose by NRC Staff
9:30 a.m. Overview of Generic Aging Lessons Learned (GALL) report, Standard Review Plan (SRP) and Regulatory Guide (NEI 95–10)
10:30 a.m. Break
10:45 a.m. Examples of Regulated Programs
Environmental qualification of electrical equipment (§ 50.49), maintenance rule (§ 50.65), inservice inspection (§ 50.55a), containment inservice inspection (§ 50.55a), containment leak rate test (Appendix J), quality assurance (Appendix B), reactor vessel integrity (Appendices G and H), fire protection (§ 50.48), steam generator tube inspection (technical specification).
12:15 p.m. Lunch
1:15 p.m. Examples of Reactive Programs
Service water program (Generic Letter 89–13), erosion/corrosion program (Bulletin 87–01, Generic Letter 89–08), coating program(Generic Letter 88–05), bolting program (Bulletin 82–02), control rod drive mechanism nozzle and other closure head penetration nozzles (Generic Letter 97–01)
2:45 p.m. Break
3:00 p.m. Examples of General Practice Programs
Preventive maintenance, chemistry control, crane inspection
4:15 p.m. Participant comments and questions
4:45 p.m. Summary and conclusions
5:00 p.m. Adjourn

Dated at Rockville, Maryland, this 5th day of November, 1999.

For the Nuclear Regulatory Commission.

Christopher I. Grimes,

Chief, License Renewal and Standardization Branch, Division of Regulatory Improvement Programs, Office of Nuclear Reactor Regulation.

[FR Doc. 99–29843 Filed 11–15–99; 8:45 am]

BILLING CODE 7590–01–P

NUCLEAR REGULATORY COMMISSION

Advisory Committee on Reactor Safeguards Subcommittee Meeting on Safety Research Program; Notice of Meeting

The ACRS Subcommittee on Safety Research Program will hold a meeting on December 1, 1999, Room T–2B3, 11545 Rockville Pike, Rockville, Maryland.

The entire meeting will be open to public attendance.

The agenda for the subject meeting shall be as follows:

Wednesday, December 1, 1999—1 p.m. until 5 p.m.

The Subcommittee will discuss and review the final draft of the year 2000 ACRS report on the NRC Safety Research Program. The purpose of this meeting is to gather information, analyze relevant issues and facts, and to formulate proposed positions and actions, as appropriate, for deliberation by the full Committee.

Oral statements may be presented by members of the public with the concurrence of the Subcommittee Chairman; written statements will be accepted and made available to the Committee. Electronic recordings will be permitted only during those portions of the meeting that are open to the public, and questions may be asked only by members of the Subcommittee, its consultants, and staff. Persons desiring to make oral statements should notify the cognizant ACRS staff engineer named below five days prior to the meeting, if possible, so that appropriate arrangements can be made.

During the initial portion of the meeting, the Subcommittee, along with any of its consultants who may be present, may exchange preliminary views regarding matters to be considered during the balance of the meeting.

Further information regarding topics to be discussed, whether the meeting

has been canceled or rescheduled, the Chairman's ruling on requests for the opportunity to present oral statements and the time allotted therefor can be obtained by contacting the cognizant ACRS staff engineer, Dr. Medhat El-Zeftawy (telephone 301/415–6889) between 7:30 a.m. and 4:15 p.m. (EST). Persons planning to attend this meeting are urged to contact the above named individual one or two working days prior to the meeting to be advised of any potential changes in the proposed agenda, etc., that may have occurred.

Dated: November 8, 1999.

Howard J. Larson,

Acting Associate Director for Technical Support, ACRS/ACNW.

[FR Doc. 99–29836 Filed 11–15–99; 8:45 am]

BILLING CODE 7590–01–P

NUCLEAR REGULATORY COMMISSION

Advisory Committee on Reactor Safeguards Subcommittee Meeting on Planning and Procedures; Notice of Meeting

The ACRS Subcommittee on Planning and Procedures will hold a meeting on December 1, 1999, Room T–2B1, 11545 Rockville Pike, Rockville, Maryland.

The entire meeting will be open to public attendance, with the exception of a portion that may be closed pursuant to 5 U.S.C. 552b(c) (2) and (6) to discuss organizational and personnel matters that relate solely to internal personnel rules and practices of ACRS, and information the release of which would constitute a clearly unwarranted invasion of personal privacy.

The agenda for the subject meeting shall be as follows:

Wednesday, December 1, 1999—11:30 a.m. until the conclusion of business

The Subcommittee will discuss proposed ACRS activities and related matters. It may also discuss the status of appointment of a new member to the ACRS. The purpose of this meeting is to gather information, analyze relevant issues and facts, and to formulate proposed positions and actions, as appropriate, for deliberation by the full Committee.

Oral statements may be presented by members of the public with the concurrence of the Subcommittee Chairman; written statements will be accepted and made available to the Committee. Electronic recordings will be permitted only during those portions of the meeting that are open to the public, and questions may be asked only by members of the Subcommittee, its consultants, and staff. Persons desiring to make oral statements should notify the cognizant ACRS staff person named below five days prior to the meeting, if possible, so that appropriate arrangements can be made.

Further information regarding topics to be discussed, the scheduling of sessions open to the public, whether the meeting has been canceled or rescheduled, the Chairman's ruling on requests for the opportunity to present oral statements, and the time allotted therefor can be obtained by contacting the cognizant ACRS staff person, Dr. John T. Larkins (telephone: 301/415–7360) between 7:30 a.m. and 4:15 p.m. (EST). Persons planning to attend this meeting are urged to contact the above named individual one or two working days prior to the meeting to be advised of any changes in schedule, etc., that may have occurred.

Dated: November 9, 1999.

John T. Larkins,

Executive Director, ACRS/ACNW.

[FR Doc. 99–29837 Filed 11–15–99; 8:45 am]

BILLING CODE 7590–01–P

NUCLEAR REGULATORY COMMISSION

Advisory Committee on Reactor Safeguards Subcommittee Meeting on Materials and Metallurgy; Notice of Meeting

The ACRS Subcommittee on Materials and Metallurgy will hold a meeting on December 1, 1999, Room T–2B3, 11545 Rockville Pike, Rockville, Maryland.

The entire meeting will be open to public attendance. The agenda for the subject meeting shall be as follows:

Wednesday, December 1, 1999—8:00 a.m. until 11:00 a.m.

The Subcommittee will review the staff's proposed revision to 10 CFR 50.55a, ''Codes and standards,'' that revises the requirement to update inservice inspection and inservice testing programs to the latest American Society of Mechanical Engineers (ASME) Code edition every 120 months and related matters. The purpose of this meeting is to gather information, analyze relevant issues and facts, and to formulate proposed positions and actions, as appropriate, for deliberation by the full Committee.

Oral statements may be presented by members of the public with the concurrence of the Subcommittee Chairman. Written statements will be accepted and made available to the Committee. Electronic recordings will be permitted only during those portions of the meeting that are open to the public, and questions may be asked only by members of the Subcommittee, its consultants, and staff. Persons desiring to make oral statements should notify the cognizant ACRS staff engineer named below five days prior to the meeting, if possible, so that appropriate arrangements can be made.

During the initial portion of the meeting, the Subcommittee, along with any of its consultants who may be present, may exchange preliminary views regarding matters to be considered during the balance of the meeting.

The Subcommittee will then hear presentations by and hold discussions with representatives of the NRC staff, the Nuclear Energy Institute, ASME, and other interested persons regarding this review.

Further information regarding topics to be discussed, whether the meeting has been canceled or rescheduled, and the Chairman's ruling on requests for the opportunity to present oral statements and the time allotted therefor, can be obtained by contacting the cognizant ACRS staff engineer, Dr. Medhat M. El-Zeftawy (telephone 301/415–6889) between 7:30 a.m. and 4:15 p.m. (EST). Persons planning to attend this meeting are urged to contact the above named individual one or two working days prior to the meeting to be advised of any potential changes to the agenda, etc., that may have occurred.

Dated: November 8, 1999.

Howard J. Larson,

Acting Associate Director for Technical Support, ACRS/ACNW.

[FR Doc. 99–29838 Filed 11–15–99; 8:45 am]

BILLING CODE 7590–01–P

NUCLEAR REGULATORY COMMISSION

Sunshine Act; Meeting

AGENCY HOLDING THE MEETING: Nuclear Regulatory Commission.

DATES: Weeks of November 15, 22, 29, and December 6, 1999.

PLACE: Commissioners' Conference Room, 11555 Rockville Pike, Rockville, Maryland.

STATUS: Public and Closed.

MATTERS TO BE CONSIDERED:

Week of November 15

Friday, November 19

9:25 a.m. Affirmation Session (Public Meeting) (if needed)

Week of November 22—Tentative

Wednesday, November 24

9:25a.m. Affirmation Session (Public Meeting) (if needed)

Week of November 29—Tentative

There are no meetings scheduled for the Week of November 29.

Week of December 6—Tentative

Wednesday, December 8

9:25 a.m. Affirmation Session (Public Meeting) (if needed)

The schedule for Commission meetings is subject to change on short notice. To verify the status of meetings call (Recording)—(301) 415–1292.

CONTACT PERSON FOR MORE INFORMATION: Bill Hill (301) 415–1661.

The NRC Commission Meeting Schedule can be found on the Internet at:

http://www.nrc.gov/SECY/smj/schedule.htm

This notice is distributed by mail to several hundred subscribers; if you no longer wish to receive it, or would like to be added to it, please contact the Office of the Secretary, Attn: Operations Branch, Washington, DC 20555 (301–415–1661). In addition, distribution of this meeting notice over the Internet system is available. If you are interested in receiving this Commission meeting schedule electronically, please send an electronic message to wmh@nrc.gov or dkw@nrc.gov.

Dated: November 10, 1999.

William M. Hill, Jr.,

SECY Tracking Officer, Office of the Secretary.

[FR Doc. 99–29990 Filed 11–12–99; 11:43 am]

BILLING CODE 7590–01–M

SECURITIES AND EXCHANGE COMMISSION

[Investment Company Act Release No. 24127; 812–11838]

J.P. Morgan & Co. Inc.; Notice of application

November 8, 1999.

AGENCY: Securities and Exchange Commission (''Commission'').

ACTION: Notice of an application under section 6(c) of the Investment Company Act of 1940 (the ''Act'') for an exemption from all provisions of the Act.

Summary of Application: . J.P. Morgan & Co. Incorporated (''J.P. Morgan'') seeks an order to amend an existing order to permit additional entities to rely on the existing order, which exempts certain entities that finance the operations of J.P. Morgan and certain of its subsidiaries from the provisions of the Act.

Filing Date: The application was filed on November 4, 1999.

Hearing or Notification of Hearing: An order granting the application will be issued unless the Commission orders a hearing. Interested persons may request a hearing by writing to the Commission's Secretary and serving applicants with a copy of the request, personally or by mail. Hearing requests should be received by the commission by 5:30 p.m. on November 30, 1999, and should be accompanied by proof of service on applicants, in the form of an affidavit, or, for lawyers, a certificate of service. Hearing requests should state the nature of the writer's interest, the reason for the request, and the issues contested. Persons who wish to be notified of a hearing may request notification by writing to the Commission's Secretary.

ADDRESSES: Secretary, Commission, 450 Fifth Street, NW., Washington, DC 20549–0609; Applicant, 60 Wall Street, New York, NY 10260–0060.

FOR FURTHER INFORMATION CONTACT: Bruce R. MacNeil, Staff Attorney, at (202) 942–0634, or Nadya B. Roytblat, Assistant Director, at (202) 942–0564 (Division of Investment Management, Office of Investment Company Regulation).

SUPPLEMENTARY INFORMATION: The following is a summary of the application. The complete application may be obtained for a fee at the Commission's Public Reference Branch, 450 Fifth Street, NW., Washington, DC 20549–0102 (telephone (202) 942–8090).

Applicant's Representations

1. On July 15, 1997, the Commission issued an order under section 6(c) of the Act that exempted J.P. Morgan Index Funding Company I, J.P. Morgan Index Funding Company II, J.P. Morgan Index Funding Company III, J.P. Morgan Index Funding Funding Company IV and J.P. Morgan Index Funding Company V (the ''Original Applicants'') from all provisions of the Act (''Original Order'').[1] The Original Order permitted the Original Applicants, each of which was organized as a Delaware business trust, to sell their preferred beneficial interests and use the proceeds to finance the business activities of their parent company, J.P. Morgan, and certain of J.P. Morgan's subsidiaries. J.P. Morgan's largest subsidiary, Morgan Guaranty Trust Company of New York (''Morgan Guaranty''), is a New York chartered bank.

2. J.P. Morgan seeks an order amending the Original Order that would exempt from the provisions of the Act such other Delaware business trusts as may be created by J.P. Morgan in the future, all of the voting beneficial interests of which will be owned directly or indirectly by J.P. Morgan, and whose operations will be substantially similar to those of the Original Applicants (''Future Trusts''). J.P. Morgan states that each Future Trust will comply with all of the terms and conditions of the Original Order.

Applicant's Condition

Applicant agrees that the requested order will be subject to the following condition:

Each Future Trust will comply with all of the provisions of rule 3a–5 under the Act, except: (a) J.P. Morgan will not meet the portion of the definition of ''parent company'' in rule 3a–5(b)(2)(i) solely because it is excluded from the definition of investment company under section 3(c)(6) of the Act; (b) Morgan Guaranty will not meet the portion of the definition of ''company controlled by the parent company'' in rule 3a–5(b)(3)(i) solely because it is excluded from the definition of investment company under section 3(c)(3) of the Act; and (c) the Future Trust will be permitted to invest in or make loans to corporations, partnerships, and joint ventures that do not meet the portion of the definition of ''company controlled by the parent company'' in rule 3a–5(b)(3)(i) solely because they are excluded from the definition of investment company by sections 3(c)(2), 3(c)(3), 3(c)(4) or 3(c)(6) of the Act, provided that any such entity excluded from the definition of investment company under section 3(c)(6) will not be engaged primarily, directly or through majority owned subsidiaries, in one or more of the businesses described in section 3(c)(5) of the Act.

For the Commission, by the Division of Investment Management, pursuant to delegated authority.

Margaret H. McFarland,

Deputy Secretary.

[FR Doc. 99–29778 Filed 11–15–99; 8:45 am]

BILLING CODE 8010–01–M

[1] *J.P. Morgan Index Funding Company I, et al.,* Investment Company Act Release Nos. 22713 (June 17, 1997) (notice) and 22750 (July 15, 1997) (order).

SECURITIES AND EXCHANGE COMMISSION

[Release No. 34–42112; File No. SR–CBOE–99–38]

Self-Regulatory Organizations; Notice of Filing of Proposed Rule Change by the Chicago Board Options Exchange, Inc. Amending its Trade Processing Rules

November 5, 1999.

Pursuant to section 19(b)(1) of the Securities Exchange Act of 1934 (''Act''),[1] notice is hereby given that on July 13, 1999, the Chicago Board Options Exchange, Inc. (''CBOE'' or ''Exchange'') filed with the Securities and Exchange Commission (''Commission''), the proposed rule change as described in Items I, II, and III below, which Items have been prepared by the CBOE. The Commission is publishing this notice to solicit comments on the proposed rule change from interested persons.

I. Self-Regulatory Organization's Statement of the Terms of Substance of the Proposed Rule Change

The CBOE is proposing to update and reorganize its rules on trade processing. The text of the proposed rule change is available at the CBOE and at the Commission.

II. Self-Regulatory Organization's Statement of the Purpose of, and Statutory Basis for, the Proposed Rule Change

In its filing with the Commission, the CBOE included statements concerning the purpose of, and basis for, the proposed rule change and discussed any comments it received on the proposed rule change. The text of these statements may be examined at the places specified in Item IV below. The CBOE has prepared summaries, set forth in sections A, B, and C below, of the most significant aspects of such statements.

A. Self-Regulatory Organization's Statement of the Purpose of, and Statutory Basis for, the Proposed Rule Change

1. Purpose

The purpose of the proposed rule change is to update the Exchange's trade processing rules to incorporate changes that have been made to the Exchange's trade processing system over the last few years. One significant change that has occurred at the Exchange is the increasing use of market-maker handheld trading terminals. Market-maker handheld terminals are electronically linked to the Exchange's trade processing system and trade information is sent to the Exchange's trade processing system automatically when the trade is input onto the handheld terminal. Currently, more than 85% of market-maker trade input is done through market-maker handheld terminals. Market-makers that do not use handheld terminals must manually record their trade information on a trade card and submit a copy of the card to the member's clearing firm for inclusion into the Exchange's trade processing system.

The Exchange is proposing to change Exchange Rule 6.50 to require Members to file with, or at the direction of, the Exchange trade information required by Rule 6.51(d) for each Exchange transaction for which the Member is responsible. The rule currently states that only Clearing Members are required to file the required trade information with the Exchange. With the use of handhelds, however, much of the required trade information is already provided automatically by the market-maker members.

The Exchange is deleting the phrase ''business day (the exact hours to be fixed by the Exchange)'' which describes when Members are required to submit trade information because the Exchange no longer uses a scheduled batch process for processing trade information. Consequently, the Exchange no longer fixes the time by which trade information must be submitted. Currently, the Exchange processes trade information on a continuous real time basis as it receives input from handhelds and other electronic systems such as the Retail Automatic Execution System (''RAES'')[2] and the Exchange's Order Routing System (''ORS'')[3] throughout the trading day.

The Exchange is proposing to change Interpretation .01 to Rule 6.51 to require the buyer and seller in each transaction to immediately provide the transaction record to the member for whom the transaction was executed and/or the clearing member that will clear the transaction. Currently, the interpretation requires the buyer and seller to provide transaction record within the time frames established by the Exchange. Again, the widespread use of technology in trading allows for the information to be provided immediately. The provision of the information immediately will allow for more efficient trade checking on an intra-day basis.

The Exchange is adding a new Interpretation .03 to Exchange Rule 6.51 to explicitly set forth the requirements for submitting trade information. These requirements are currently set forth in Exchange Rule 2.30, which establishes fees for late trade submission. Interpretation .03 makes it clear that members are required to submit the information in accordance with the interpretation even if the information is submitted in a timely manner for purposes of Rule 2.30. The new interpretation sets forth the following procedures for reporting transactions pursuant to Rule 6.51(d): For trades executed via an electronic data storage medium, or electronic system, trade information shall be immediately submitted to the Exchange for trade matching and clearance. For trades not executed on an electronic data storage medium, or electronic system, trade information shall be immediately recorded on a card or ticket and submitted as soon as reasonably possible, but not later than the one hour maximum time periods stated in Rule 2.30.

The Exchange is amending Rule 6.61 to provide that a member may receive either an Unmatched Trade Notification or an Unmatched Trade Report. An Unmatched Trade Notification is an electronic message sent to market-maker handheld users, whereas an Unmatched Trade Report is a written notice sent to all members and firms. Currently, under rule 6.61 a member only receives Unmatched Trade Reports. The Exchange is also proposing amending Rule 6.61 to obligate Members to reconcile all unmatched trades and advisory trades and to report all reconciliations to the Exchange ''or the Clearing Member responsible for submission to the Exchange.'' The addition of the phrase makes it clear that all Members are responsible for reconciling unmatched trades and to report those reconciliations to the Exchange or the Clearing Member responsible for submission to the Exchange.

The Exchange is proposing to make a number of revisions to Interpretation .01 to Rule 6.61. New paragraph (a) of Interpretation and Policy .01 of Rule 6.61 essentially is an updated version of what is now paragraph (a) of Interpretation .05 to Rule 6.61. The difference is that the provision in Interpretation .05 required that a representative be available to resolve

[1] 15 U.S.C. 78s(b)(1).

[2] RAES permits automatic execution of small public customer orders.

[3] ORS provides member firms with a method of efficiently delivering orders to CBOE's trading floor. Orders received by ORS are logged onto the ORS database and evaluated, based on volume and price, to determine their routing destination on the trading floor.

unmatched trades only for transactions in index options or in any class of options which will trade ex-dividend or ex-distribution the following day. By including the requirements in paragraph (a) in Interpretation .01 the Exchange is requiring that a representative be available to reconcile unmatched trades for all options transactions on all trade dates. Because of system enhancements, the Exchange and its members now have the tools to review trade activity on an intra-day basis. By requiring reports to be reconciled on an intra-day basis, the Exchange can minimize the potential loss to members who may have to take market action to correct an outtrade.

Paragraph (b) of Interpretation .01 to Rule 6.61 also is being moved from Interpretation .05 and requires that members make reasonable efforts to detect and correct errors in carding or keying a trade. By virtue of being moved from Interpretation .05 to Interpretation .01, the requirement will become applicable to all transactions in options and not only those concerning index options or any class of options which will trade ex-dividend or ex-distribution the following day.

Paragraph (c) of Interpretation .01 changes the time requirement for correcting unmatched trades that occurred on the previous trade date from the opening of trading to fifteen minutes prior to the opening of trading on the next business day. This change will allow the involved parties to correct the positions and be prepared for open trading sooner. By resolving the unmatched trade before the market in the underlying security opens, the parties will be in a better position to enter any necessary orders in the markets to adjust their positions where necessary.

Paragraph (d) of Interpretation .05 is being moved to paragraph (d) of Interpretation .01 and states that Members who fail to comply with Rule 6.61 will be responsible for any liability resulting from an unmatched transaction that should have been matched. Moving this provision from Interpretation .05 to Interpretation .01 will make it applicable to all transactions in options and not only those concerning index options and any class of options which will trade ex-dividend or ex-distribution the following day. In addition, to further clarify to the Exchange membership the Exchange's authority to handle violations of Rule 6.61, the Exchange notes that it may establish a fine schedule with respect to the violative conduct and it may refer repeated violations to the Business Conduct Committee.[4]

Finally, the Exchange is proposing to amend Interpretation .05 to Exchange Rule 6.61 by revising the language to make it consistent with current practice. The Exchange has deleted references to First Pass and Second Pass. First Pass and Second Pass refer to the former practice of submitting trade information for trade processing in batches at different times during the day. Now the Exchange processes the trade information continually through the trade day.

2. Statutory Basis

The proposed rule change is consistent with section 6(b) of the Act[5] in general and furthers the objectives of section 6(b)(5)[6] in particular in that it is designed to promote just and equitable principles of trade, remove impediments to a free and open market and a national market system, and protect investors and the public interest.

B. Self-Regulatory Organization's Statement on Burden on Competition

The CBOE does not believe that the proposed rule change will impose any burden on competition.

C. Self-Regulatory Organization's Statement on Comments on the Proposed Rule Change Received From Members, Participants, or Others

The Exchange did not solicit or receive written comments on the proposed rule change.

III. Date of Effectiveness of the Proposed Rule Change and Timing for Commission Action

Within 35 days of the date of publication of this notice in the **Federal Register** or within such longer period (i) as the Commission may designate up to 90 days of such date if it finds such longer period to be appropriate and publishes its reasons for so finding or (ii) as to which the self-regulatory organization consents, the Commission will:

(A) By order approve such proposed rule change, or

(B) Institute proceedings to determine whether the proposed rule change should be disapproved.

IV. Solicitation of Comments

Interested person are invited to submit written data, views and arguments concerning the foregoing, including whether the proposed rule change is consistent with the Act. Persons making written submissions should file six copies thereof with the Secretary, Securities and Exchange Commission, 450 Fifth Street, NW., Washington, DC 20549–0609. Copies of the submission, all subsequent amendments, all written statements with respect to the proposed rule change that are filed with the Commission, and all written communications relating to the proposed rule change between the Commission and any person, other than those that may be withheld from the public in accordance with the provisions of 5 U.S.C. 552, will be available for inspection and copying in the Commission's Public Reference Room. Copies of such filing will also be available for inspection and copying at the principal office of CBOE. All submissions should refer to the File No. SR–CBOE–99–38 and should be submitted by December 7, 1999.

For the Commission, by the Division of Market Regulation, pursuant to delegated authority.[7]

Margaret H. McFarland,

Deputy Secretary.

[FR Doc. 99–29796 Filed 11–15–99; 8:45 am]

BILLING CODE 8010–01–M

[4] The Exchange would be required to submit the appropriate rule filing in compliance with section 19(b) of the Act.

[5] 15 U.S.C. 78f(b).

[6] 15 U.S.C. 78f(b)(5).

[7] 17 CFR 200.30–3(a)(12).

SECURITIES AND EXCHANGE COMMISSION

[Release No. 42113; File No. SR–Phlx–99–40]

Self-Regulatory Organizations; Notice of Filing and Immediate Effectiveness of Proposed Rule Change by the Philadelphia Stock Exchange, Inc. Relating to Communications With Customers or Members of the Public

Pursuant to Section 19(b)(1) of the Securities Exchange Act of 1934 (''Act''),[1] and Rule 19b–4 thereunder,[2] notice is hereby given that on October 7, 1999, the Philadelphia Stock Exchange, Inc. (''Phlx'' or ''Exchange'') filed with the Securities and Exchange Commission (''Commission'') the proposed rule change as described in Items I, II, and below, which Items have been prepared by the Phlx. The Commission is publishing this notice to solicit comments on the proposed rule change from interested persons.

[1] 15 U.S.C. 78s(b)(1).

[2] 17 CFR 240.19b–4.

I. Self-Regulatory Organization's Statement of the Terms of Substance of the Proposed Rule Change

The Exchange proposes to amend Phlx Rule 1049 (''Communications to Customers'') to allow members, member organizations, and associated persons to distribute to customers or members of the public more than one type of options worksheet to indicate possible outcomes under various market conditions. Specifically, the proposed rule change: (i) incorporates worksheets into the definition of ''sales literature'' and establishes that worksheets must comply with the requirements applicable to sales literature; (ii) adds references to members and associated persons; (iii) deletes references to ''standard'' worksheets and deletes prohibitions on ''nonstandard'' worksheets; and (iv) deletes the requirement that worksheets must be uniform within a member organization for each product type. Below is the text of the proposed rule change. Proposed new language is in italic; proposed deletions are in brackets.

Rule 1049. Communications to Customers

(a) to (d) No change.

(e) *Definitions.* For purposes of this Rule, the following definitions shall apply:

(i) and (ii) No change.

(iii) The term ''sales literature'' shall include any written communication (not defined as an ''advertisement'' or as ''educational material'') distributed or made available to customers or the public that contains any analysis, performance report, projection or recommendation with respect to options, underlying securities or market conditions, any [standard] forms of worksheets, or any seminar text which pertains to options and which is communicated to customers or the public at seminars, lectures or similar such events, or any Exchange-produced materials pertaining to options.

(f) No change.

Commentary:

.01 to .03 No change.

.04 to D No change.

E. [Standard forms of o] *O*ptions worksheets utilized by *members,* member organizations, *or associated persons,* [in addition to] *must* comply[ing] with the requirements applicable to sales literature. [, must be uniform within a member organization for each product type (e.g. equity, foreign currency, index, etc.).]

[F. If a member organization has adopted a standard form of worksheet for a particular options strategy, nonstandard worksheets for that strategy may not be used.]

F. [G. Communications that portray performance of past recommendations or actual transactions and completed worksheets shall be kept at a place easily accessible to the sales office for the accounts or customers involved.

0.5 No change.

II. Self-Regulatory Organization's Statement of the Purpose of, and Statutory Basis for, the Proposed Rule Change

In its filing with the Commission, the Phlx included statements concerning the purpose of, and basis for, the proposed rule change and discussed any comments it received on the proposed rule change. The text of these statements may be examined at the places specified in Item IV below. The Exchange has prepared summaries, set forth in sections A, B, and C below, of the most significant aspects of such statements.

A. Self-Regulatory Organization's Statement of the Purpose of, and Statutory Basis for, the Proposed Rule Change

1. Purpose

The purpose of the proposed rule change is to allow members, member organizations, and associated persons to distribute more than one type of options worksheet to customers or members of the public. The proposed rule change would allow members, member organizations, and associated persons to use Exchange or industry-produced worksheets or to tailor worksheets to specific clientele. Under the current rule, once a member organization adopts a ''standard'' worksheet for a particular options strategy or product type (*e.g.,* equities, foreign currently, index, etc.), it can only distribute that standard worksheet to a client, and may not illustrate different market conditions through other worksheets.

The proposed rule change also ensures that when members, member organizations, and associated persons use options worksheets, all such worksheets will comply with the requirements applicable to sales literature. These requirements provide that (i) sales literature must state that supporting documentation is available upon demand for any claims, comparisons, recommendations, statistics or other technical data, and (ii) sales literature may contain projected performance figures only if it does not suggest the projection is certain, parameters relating to the projected performance and all relevant costs are clearly disclosed, the projections are plausible, and all material assumptions are identified.[3] Under current Rule 1049, only standard options worksheets used by member organizations must comply with sales literature requirements.

The Exchange believes that the proposed rule change will improve the quality of options worksheets that customers or members of the public receive from members, member organizations, and associated persons. The proposed rule change should enhance members' ability to describe properly the risks and benefits of options trading, and should enhance the ability of customers or members of the public to understand these risks and benefits. In addition, by establishing that worksheets used by members, member organizations, and associated persons must comply with sales literature requirements, the proposed rule change should promote uniform application of Rule 1049.

2. Statutory Basis

The Exchange believes that the proposed rule change is consistent with Section 6(b) of the Act[4] in general, and Section 6(b)(5)[5] in particular, in that it is designed to facilitate transactions in securities and remove impediments to and perfect the mechanism of a free and open market and national market system, and to protect investors and the public interest by allowing the distribution of worksheets that are tailored to the needs of specific clients.[6]

B. Self-Regulatory Organization's Statement on Burden on Competition

The Phlx does not believe that the proposed rule change will impose any inappropriate burden on competition.

C. Self-Regulatory Organization's Statement on Comments on the Proposed Rule Change Received From Members, Participants, or Others

No written comments were solicited or received on the proposed rule change.

III. Date of Effectiveness of the Proposed Rule Change and Timing for Commission Action

The proposed rule change will become effective upon filing pursuant to Section 19(b)(3)(A) of the Act,[7] and Rule

[3] Phlx Rule 1049, Commentary .04.

[4] 15 U.S.C. 78f(b).

[5] 15 U.S.C. 78f(b)(5).

[6] In reviewing this proposal, the Commission has considered its impact on efficiency, competition, and capital formation. 15 U.S.C. 78c(f).

[7] 15 U.S.C. 78s(b)(3)(A).

19b–4(f)(6)[8] thereunder, in that it is designated by the Exchange as effecting a change that: (i) does not significantly affect the protection of investors or the public interest; (ii) does not impose any significant burden on competition; and (iii) by its terms, does not become operative for thirty days after the date of the filing, or such shorter time as the Commission may designate if consistent with the protection of investors and the public interest.

The Exchange represents that it provided written notice of its intent to file the proposed rule change at least five business days prior to the filing date. At any time within 60 days of the filing of the proposed rule change, the Commission may summarily abrogate the proposed rule change if it appears to the Commission that such action is necessary or appropriate in the public interest, for the protection of investors, or otherwise in furtherance of the purposes of the Act.

IV. Solicitation of Comments

Interested persons are invited to submit written data, views, and arguments concerning the foregoing, including whether the proposed rule change is consistent with the Act. Persons making written submissions should file six copies thereof with the Secretary, Securities and Exchange Commission, 450 Fifth Street, NW., Washington, DC 20549–0609. Copies of the submission, all subsequent amendments, all written statements with respect to the proposed rule change that are filed with the Commission, and all written communications relating to the proposed rule change between the Commission and any person, other than those that may be withheld from the public in accordance with the provisions of 5 U.S.C. 552, will be available for inspection and copying in the Commission's Public Reference Room in Washington, DC. Copies of such filing will also be available for inspection and copying at the principal office of the Phlx. All submissions should refer to the File No. SR–Phlx–99–40 and should be submitted by December 7, 1999.

For the Commission, by the Division of Market Regulation, pursuant to delegated authority.[9]

Margaret H. McFarland,

Deputy Secretary.

[FR Doc. 99–29876 Filed 11–15–99; 8:45 am]

BILLING CODE 8010–01–M

[8] 17 CFR 240.19b–(f)(6).

[9] 17 CFR 200.30–3(a)(12).

SOCIAL SECURITY ADMINISTRATION

Agency Information Collection Activities: Proposed Request and Comment Request

In compliance with Public Law 104–13, the Paperwork Reduction Act of 1995, SSA is providing notice of its information collections that require submission to the Office of Management and Budget (OMB). SSA is soliciting comments on the accuracy of the agency's burden estimate; the need for the information; its practical utility; ways to enhance its quality, utility and clarity; and on ways to minimize burden on respondents, including the use of automated collection techniques or other forms of information technology.

I. The information collection listed below will be submitted to OMB within 60 days from the date of this notice. Therefore, comments and recommendations regarding the information collection would be most useful if received by the Agency within 60 days from the date of this publication. Comments should be directed to the SSA Reports Clearance Officer at the address listed at the end of the notices. You can obtain a copy of the collection instrument by calling the SSA Reports Clearance Officer on (410) 965–4145, or by writing to him.

Annual Registration Statement Identifying Separated Participants with Deferred Benefits, Schedule SSA—0960–0606 (1999 edition). Schedule SSA is a form filed annually as part of a series of pension plan documents required by Section 6057 of the IRS Code. Administrators of pension benefit plans are required to report specific information on future plan benefits for those participants who left plan coverage during the year. SSA maintains the information until a claim for Social Security benefits has been approved. At that time, SSA notifies the beneficiary of his/her potential eligibility for payments from the private pension plan. The respondents are administrators of pension benefit plans or their service providers employed to prepare the Schedule SSA on behalf of the pension benefit plan.

Below are the estimates of the cost and hour burdens for completing and filing Schedule SSA(s). We have used an average to estimate the hour burden. However, the burden may be greater or smaller depending on whether the respondent is a large or small pension benefit plan and how many Schedule SSA's are filed in a given year.

Number of Respondents: 88,000.

Frequency of Response: Annually.

Average Burden Per Respondent: 2.5 hours.

Estimated Annual Burden: 220,074 hours.

Estimated Annual Cost Burden for All Respondents: $12,194,400.

II. The information collection listed below has been submitted to OMB for clearance. Written comments and recommendations on the information collections would be most useful if received within 30 days from the date of this publication. Comments should be directed to the SSA Reports Clearance Officer and the OMB Desk Officer at the addresses listed after this notice. You can obtain a copy of the OMB clearance package by calling the SSA Reports Clearance Officer on (410) 965–4145, or by writing to him.

Medical Use Report, 20 CFR 416.268–0960–0267. The information required by this regulation is used by the Social Security Administration to determine if an individual is entitled to special Supplemental Security Income (SSI) payments. The respondents are SSI receipts whose payments were stopped based on earnings.

Number of Respondents: 60,000.

Frequency of Response: 1.

Average Burden Per Response: 3 minutes.

Estimated Average Burden: 3,000 hours.

(SSA Address), Social Security Administration, DCFAM, Attn: Frederick W. Brickenkamp, 6401 Security Blvd., 1–A–21 Operations Bldg., Baltimore, MD 21235.

(OMB Address), Office of Management and Budget, OIRA, Attn: Lori Schack, New Executive Office Building, Room 10235, 725 17th St., NW, Washington, DC 20503.

Dated: November 9, 1999.

Frederick W. Brickenkamp,

Reports Clearance Officer, Social Security Administration.

[FR Doc. 99–29858 Filed 11–15–99; 8:45 am]

BILLING CODE 4191–02–U

DEPARTMENT OF STATE

[Public Notice 3157]

Exchange Visitor Designation Staff; Proposed Information Collection

AGENCY: Department of State.

ACTION: Notice of request for extension to an existing OMB clearance: ''Certificate of Eligibility for Exchange Visitor Status,'' J–1 Visa, 1405–0121.

SUMMARY: The Department of State is seeking Office of Management and Budget (OMB) approval for the

information collection described below. The purpose of this notice is to allow 60 days for public comment in the **Federal Register** preceding submission to OMB. This process is conducted in accordance with the Paperwork Reduction Act of 1995.

The following summarizes the information collection proposal submitted to OMB:

Type of Request: Comment.

Originating Office: Exchange Visitor Program Services.

Title of Information Collection: Certificate of Eligibility for Exchange Visitor Status.

Frequency: Annually.

Form Number: DS–2019 (formerly U.S. Information Agency's IAP–66).

Respondents: Exchange visitors.

Estimated Number of Respondents: 200,000.

Average Hours Per Response: 15 minutes.

Total Estimated Burden: 50,000 hours.

Public comments are being solicited to permit the agency to:

- Evaluate whether the proposed information collection is necessary for the proper performance of the functions of the agency.
- Evaluate the accuracy of the agency's estimate of the burden of the proposed collection, including the validity of the methodology and assumptions used.
- Enhance the quality, utility, and clarity of the information to be collected.
- Minimize the reporting burden on those who are to respond, including through the use of automated collection techniques or other forms of technology.

FOR FURTHER INFORMATION CONTACT: Public comments, or requests for additional information, regarding the collection listed in this notice should be directed to the Program Designation Officer, ECA/GCV, 301 Fourth Street, SW., telephone 202–401–9810. United States Department of State, Washington, DC 20547.

Dated: October 20, 1999.

James D. Whitten,

ECA/EX—Executive Director.

[FR Doc. 99–29870 Filed 11–15–99; 8:45 am]

BILLING CODE 4710–10–P

DEPARTMENT OF STATE

[Public Notice 3158]

Culturally Significant Objects Imported for Exhibition; Determinations: ''Stroganoff: The Palace and Collections of a Russian Noble Family''

DEPARTMENT: United States Department of State.

ACTION: Notice.

SUMMARY: Notice is hereby given of the following determinations: Pursuant to the authority vested in me by the Act of October 19, 1965 (79 Stat. 985, 22 U.S.C. 2459), the Foreign Affairs Reform and Restructuring Act of 1998 (112 Stat. 2681, *et seq.*), Delegation of Authority No. 234 of October 1, 1999, and Delegation of Authority No. 236 of October 19, 1999, I hereby determine that the objects to be included in the exhibition ''Stroganoff: The Palace and Collections of a Russian Noble Family,'' imported from abroad for the temporary exhibition without profit within the United States, are of cultural significance. These objects are imported pursuant to loan agreements with foreign lenders. I also determine that the exhibition or display of the exhibit objects at the Portland Art Museum, Portland, Oregon, from on or about February 17, 2000, to on or about May 31, 2000, and at the Kimbell Art Museum, Ft. Worth, Texas, from on or about July 1, 2000, to on or about September 30, 2000, is in the national interest.

FOR FURTHER INFORMATION CONTACT: For further information, including a list of exhibit objects, contact Lorie J. Nierenberg, Attorney-Adviser, Office of the Legal Adviser, U.S. Department of State (telephone: 202/619–6084). The address is U.S. Department of State, SA–44; 301–4th Street, S.W., Room 700, Washington, DC 20547–0001.

Dated: November 8, 1999.

James D. Whitten,

Executive Director, Bureau of Educational and Cultural Affairs, Department of State.

[FR Doc. 99–29871 Filed 11–15–99; 8:45 am]

BILLING CODE 4710–08–D

DEPARTMENT OF STATE

[Public Notice No: 3145]

Advisory Committee on Historical Diplomatic Documentation; Notice of Meeting

The Advisory Committee on Historical Diplomatic Documentation will meet in the Department of State, 2201 ''C'' Street NW, Washington, DC, December 13, 1999 in Conference Room 1205 and December 14, 1999, in Conference Room 1207. Prior notification and a valid photo are mandatory for entrance into the building. One week before the meeting the public must notify Gloria Walker, Office of Historian (202–663–1124) providing their date of birth, Social Security number, and telephone number.

The Committee will meet in open session from 9 a.m. through noon on Monday, December 13, 1999. The remainder of the Committee's sessions from 1:45 p.m. on Monday, December 13, 1999 until noon on Tuesday, December 14, 1999 will be closed in accordance with section 10(d) of the Federal Advisory Committee Act (Pub. L. 92–463). The agenda calls for discussions involving consideration of matters not subject to public disclosure under 5 U.S.C. 552b(c)(1), and that the public interest requires that such activities be withheld from disclosure.

Questions concerning the meeting should be directed to William Slany, Executive Secretary, Advisory Committee on Historical Diplomatic Documentation, Department of State, Office of the Historian, Washington, DC, 20520, telephone (202) 663–1123, (e-mail *pahistoff@panet.us-state.gov*).

Dated: November 4, 1999.

William. Slany,

Executive Secretary, Advisory Committee on Historical Diplomatic Documentation, U.S. Department of State.

[FR Doc. 99–29869 Filed 11–15–99; 8:45 am]

BILLING CODE 4710–10–P

DEPARTMENT OF TRANSPORTATION

Federal Aviation Administration

Notice of Intent To Rule on Application to Impose and Use the Revenue From a Passenger Facility Charge (PFC) at Minneapolis-St. Paul International Airport, Minneapolis, MN

AGENCY: Federal Aviation Administration (FAA), DOT.

ACTION: Notice of intent to rule on application.

SUMMARY: The FAA proposes to rule and invites public comment on the application to impose and use the revenue from a PFC at Minneapolis-St. Paul International Airport under the provisions of the Aviation Safety and Capacity Expansion Act of 1990 (Title IX of the Omnibus Budget Reconciliation Act of 1990) (Pub. L. 101–508) and part 158 of the Federal Aviation Regulations (14 CFR part 158).

DATES: Comments must be received on or before December 16, 1999.

ADDRESSES: Comments on this application may be mailed or delivered in triplicate to the FAA at the following address: Federal Aviation Administration, Minneapolis Airports District Office, 6020 28th Avenue South, Room 102, Minneapolis, Minnesota 55450.

In addition, one copy of any comments submitted to the FAA must be mailed or delivered to Mr. Robert Vorpahl at the following address: Metropolitan Airports Commission, 6040 28th Avenue South, Minneapolis, Minnesota 55450.

Air carriers and foreign air carriers may submit copies of written comments previously provided to the Metropolitan Airports Commission under § 158.23 of part 158.

FOR FURTHER INFORMATION CONTACT: Mr. Gordon Nelson, Program Manager, Airports District Office, 6020 28th Avenue South, Room 102, Minneapolis, Minnesota 55450, telephone (612) 713–4358. The application may be reviewed in person at this same location.

SUPPLEMENTARY INFORMATION: The FAA proposes to rule and invites public comment on the application to impose and use the revenue from a PFC at Minneapolis-St. Paul International Airport under the provisions of the Aviation Safety and Capacity Expansion Act of 1990 (Title IX of the Omnibus Budget Reconciliation Act of 1990) (Pub. L. 101–508) and part 158 of the Federal Aviation Regulations (14 CFR part 158).

On October 29, 1999, the FAA determined that the application to impose and use the revenue from a PFC submitted by the Metropolitan Airports Commission was substantially complete within the requirements of § 158.25 of part 158. The FAA will approve or disapprove the application, in whole or in part, no later than February 12, 2000.

The following is a brief overview of the application.

PFC application number: 00–05–C–00–MSP.

Level of the proposed PFC: $3.00.

Proposed charge effective date: August 1, 2000.

Proposed charge expiration date: March 1, 2003.

Total estimated PFC revenue: $106,873,838.00.

Brief description of proposed projects: Runway 17 deicing pad site preparation; Runway 30L deicing pad; Runway 12R deicing pad; Runway 17/35 site preparation—1998; Runway 4/22 reconstruction—segment 3; Green Concourse apron construction—phase 1; Green Concourse apron construction—phase 2; Humphrey Terminal development; Inbound/Outbound roadway realignment; Northwest Drive improvements; and Runway 30L safety area improvements.

Class or classes of air carriers which the public agency has requested not be required to collect PFCs: Air Taxi/Commercial Operators (ATCO) filing FAA Form 1800–31.

Any person may inspect the application in person at the FAA office listed above under **FOR FURTHER INFORMATION CONTACT**.

In addition, any person may, upon request, inspect the application, notice and other documents germane to the application in person at the Metropolitan Airports Commission office.

Issued in Des Plaines, IL, on November 9, 1999.

Benito De Leon,

Manager, Planning/Programming Branch, Airports Division, Great Lakes Region.

[FR Doc. 99–29902 Filed 11–15–99; 8:45 am]

BILLING CODE 4910–13–M

DEPARTMENT OF TRANSPORTATION

Federal Aviation Administration

Notice of Intent to Rule on Application (99–02–C–00–SWF) to impose and use a passenger facility charge (PFC) at Stewart International Airport, Newburgh, NY

AGENCY: Federal Aviation Administration (FAA), DOT.

ACTION: Notice of intent to rule on application.

SUMMARY: The FAA proposes to rule and invites public comment on the application to impose and use revenue from a PFC at Stewart International Airport under the provisions of the Aviation Safety and Capacity Expansion Act of 1990 (Title IX of the Omnibus Budget Reconciliation Act of 1990) (Pub. L. 101–508) and part 158 of the Federal Aviation Regulations (14 CFR part 158).

DATES: Comments must be received on or before December 16, 1999.

ADDRESSES: Comments on this application may be mailed or delivered in triplicate to the FAA at the following address:

Mr. Dan Vornea, Project Manager, New York Airports District Office, 600 Old Country Road, Suite 446, Garden City, NY 11530.

In addition, one copy of any comments submitted to the FAA must be mailed or delivered to Mr. Hugh D. Jones, Airport Director, Stewart International Airport at the following address:

New York Department of Transportation, Stewart International Airport, 1035 First Street, New Windsor, NY 12553.

Air carriers and foreign air carriers may submit copies of written comments previously provided to New York State Department of Transportation under § 158.23 of part 158.

FOR FURTHER INFORMATION CONTACT: Dan Vornea, Project Manager, New York Airports District Office, 600 Old Country Road, Suite 446, Garden City, NY 11530, (516) 227–3812. The application may be reviewed in person at this same location.

SUPPLEMENTARY INFORMATION: The FAA proposes to rule and invites public comment on the application to impose and use revenue from a PFC at Stewart International Airport under the provisions of the Aviation Safety and Capacity Expansion Act of 1990 (Title IX of the Omnibus Budget Reconciliation Act of 1990) (Pub. L. 101–508) and part 158 of the Federal Aviation Regulations (14 CFR part 158).

On November 8, 1999, the FAA determined that the application to impose and use revenue from a PFC submitted by the New York State Department of Transportation was substantially complete within the requirements of § 158.25 of part 158. The FAA will approve or disapprove the application, in whole or in part, no later than March 7, 2000.

The following is a brief overview of the application.

Application number: 99–02–C–00–SWF.

Level of the proposed PFC: $3.00.

Proposed charge effective date: January 1, 2000.

Proposed charge expiration date: November 30, 2003.

Total estimated PFC revenue: $4,558,000.

Brief description of proposed projects:

—Runway 9/27 Overlay
—Pavement Management Plan and Topographic Mapping
—Glycol Collection Improvements
—North Cargo Ramp Expansion
—Aircraft Ramps Rehabilitation

Class or classes of air carriers which the public agency has requested not be required to collect PFCs; Part 135 Air tax and par 121 Charter

Any person may inspect the application in person at the FAA office listed above under **FOR FURTHER INFORMATION CONTACT** and at the New York Airports District Office located at:

600 Old Country Road, Suite 446, Garden City, NY 11530.

In addition, any person may, upon request, inspect the application, notice and other documents germane to the application in person at the New York State Department of Transportation, Stewart International Airport.

Issued in Garden City, New York on November 9, 1999.

Philop Brito,

Manager, NYADO, Eastern Region.

[FR Doc. 99–29903 Filed 11–15–99; 8:45 am]

BILLING CODE 4910–13–M

DEPARTMENT OF TRANSPORTATION

Federal Highway Administration

Environmental Impact Statement: Lincoln County, NM

AGENCY: Federal Highway Administration (FHWA), DOT.

ACTION: Notice of intent.

SUMMARY: The FHWA is issuing this notice to advise the public that an environmental impact statement (EIS) will be prepared for a proposed highway project in Lincoln County, New Mexico.

FOR FURTHER INFORMATION CONTACT: Gregory D. Rawlings, Environmental Specialist, Federal Highway Administration, 604 W. San Mateo Road, Santa Fe, New Mexico 87505. Telephone: (505) 820–2027.

SUPPLEMENTARY INFORMATION: The FHWA, in cooperation with the New Mexico State Highway and Transportation Department, will prepare design location studies and an EIS for proposed improvements to U.S. Highway 70 (US 70) in Lincoln County, NM. US 70 provides an essential link between Interstate 10 and Interstate 40 across southeast New Mexico and is an important route for goods movement as well as local and regional mobility. US 70 serves as a primary access route to several major recreational sites in southeastern NM, including the Lincoln National Forest, White Sands National Monument, Valley of Fires Recreation Area, a downhill ski area, a gaming casino, Ruidoso Downs race track, and several major mountain resorts. The Mescalero Apache Reservation and three military installations (Holloman and Cannon Air Force bases and White Sands Missile Range) are also accessed by US 70.

The segment of US 70 being studied is between the communities of Ruidoso Downs and Riverside, a distance of 60.3 kilometers (37. 5 miles), and includes the communities of Glencoe, San Patricio, Hondo, Tinnie, Picacho, and Riverside. Short sections of the highway also cross through or are adjacent to the Lincoln National Forest. The existing highway consists of two travel lanes with several short segments of three lanes to provide for passing. The highway intersects many side roads and driveways through these communities.

Improvements to the existing highway are needed to: (1) Meet economic growth goals of the State; and (2) correct safety deficiencies associated with use and condition of the existing highway. Alternatives for consideration will include the No Action alternative and alternatives developed through the agency and public involvement process. Alternatives may include construction of acceleration, deceleration, and turning lanes; construction of additional travel lanes; and minor realignments of the existing highway to improve design deficiencies and avoid sensitive natural and cultural resources.

Preliminary scoping for the project began in May 1999 and included (1) A letter with introductory information sent to federal, state, and local agencies, Native American groups, public and private organizations, and individuals identified as potentially interested or affected parties; and (2) two public information meetings conducted in the project study area to solicit preliminary issues and concerns regarding the proposed action. A scoping letter describing the proposed action and a draft design location study will be sent to interested agencies followed by a formal agency scoping meeting planned for December 8, 1999. Additional public meetings will be held to discuss our intention to prepare an EIS. These meetings will also provide opportunity for public and agency input.

A public hearing will be held to present the findings of the Draft EIS (DEIS) during the public review period. The DEIS will be available for public and agency review and comment prior to the hearing. To ensure that the full range of issues related to this proposed action are addressed and all significant issues identified, comments and suggestions are invited from all interested parties. Comment or questions concerning the proposed action and EIS should be directed to the FHWA at the address provided above.

(Catalogue of Federal Domestic Assistance Program Assistance Program Number 20.205, Highway Research, Planning and Construction. The regulations implementing Executive Order 12372 regarding intergovernmental consultation on Federal programs and activities and 23 U.S.C. 315; 49 CFR 1.48 apply to this program.)

Issued on November 9, 1999.

Gregory D. Rawlings,

Environmental Specialist, Santa Fe, NM.

[FR Doc. 99–29829 Filed 11–15–99; 8:45 am]

BILLING CODE 4910–22–M

DEPARTMENT OF TRANSPORTATION

Maritime Administration

Voluntary Intermodal Sealift Agreement/Joint Planning Advisory Group

AGENCY: Maritime Administration, DOT.

ACTION: Notice of meeting.

The Maritime Administration (MARAD) and United States Transportation Command announce a meeting of the Voluntary Intermodal Sealift Agreement (VISA) Joint Planning Advisory Group (JPAG) to: (1) develop VISA Business Rules and (2) begin exploring intermodal requirements. The nature of the meeting is unclassified. The meeting will be in held in Airlifters' Hall, Bldg. P–40, Scott Air Force Base, IL on December 14, 1999 from 8 a.m. to 4 p.m. and December 15, 1999 from 8 a.m. to 12 p.m. A synopsis of the meeting will be published following the meeting.

The full text of the VISA program is published in the **Federal Register** issue of February 18, 1999 at 64 FR 8214–8222. One of the program requirements is that MARAD periodically publish a list of VISA participants in the **Federal Register**. As of October 1, 1999, the following commercial U.S.-flag vessel operators were enrolled in VISA with MARAD: Alaska Cargo Transport, Inc.; American Automar, Inc.; American President Lines, Ltd.; American Roll-On Roll-Off Carrier, LLC; American Ship Management, LLC; Automar International Car Carrier, Inc.; Beyel Brothers Inc.; Central Gulf Lines, Inc.; Cook Inlet Marine; Crowley American Transport, Inc.; Crowley Marine Services, Inc.; Dixie Fuels II, Limited; Double Eagle Marine, Inc./Caribe USA, Inc.; Farrell Lines Incorporated; First American Bulk Carrier Corp.; First Ocean Bulk Carrier-I, LLC; First Ocean Bulk Carrier-II, LLC; First Ocean Bulk Carrier-III, LLC; Foss Maritime Company; Gimrock Maritime, Inc.; Liberty Shipping Group Limited Partnership; Lykes Lines Limited, L.L.C.; Lynden Incorporated; Maersk Line, Limited; Matson Navigation Company, Inc.; Maybank Navigation Company, LLC; McAllister Towing & Transportation Company, Inc.; Moby Marine Corporation; NPR, Inc.; OSG Car Carriers, Inc.; Osprey Shipholding

Corporation, L.L.C.; Resolve Towing & Salvage, Inc.; Samson Tug & Barge Company, Inc.; Seacor Marine International Inc.; Sealift Inc.; Sea-Land Service, Inc.; Smith Maritime; Stevens Towing Co, Inc.; Superior Marine Services, Inc.; Totem Ocean Trailer Express, Inc.; Trailer Bridge, Inc.; Trico Marine Operators, Inc.; Troika International, Ltd.; Van Ommeren Shipping (USA) LLC; Waterman Steamship Corporation; and Weeks Marine, Inc.

CONTACT PERSON FOR ADDITIONAL INFORMATION: Raymond R. Barberesi, Director, Office of Sealift Support, (202) 366–2323.

By Order of the Maritime Administrator.

Dated: November 9, 1999.

Joel C. Richard,

Secretary.

[FR Doc. 99–29831 Filed 11–15–99; 8:45 am]

BILLING CODE 4910–81–P

DEPARTMENT OF TRANSPORTATION

Surface Transportation Board

[STB Finance Docket No. 33813]

RailAmerica, Inc.—Control Exemption—RailTex, Inc.

AGENCY: Surface Transportation Board.

ACTION: Notice of filing of petition for exemption and request for public comments.

SUMMARY: RailAmerica, Inc., a railroad holding company that controls 12 Class III rail carriers, seeks an exemption under 49 U.S.C. 10502 from the prior approval requirements of 49 U.S.C. 11323–25 for its acquisition of control of RailTex, Inc., a railroad holding company that controls 17 Class III rail carriers. We seek comments on the requested exemption of control of RailTex by RailAmerica.

DATES: Comments are due by December 6, 1999. Petitioners' reply is due by December 15, 1999. Decision on the merits of the proposed exemption is due to be issued on January 14, 2000.

ADDRESSES: Send comments (an original and 25 copies) referring to STB Finance Docket No. 33813 to: Surface Transportation Board, Office of the Secretary, Case Control Unit, 1925 K Street, N.W., Washington, DC 20423–0001. In addition, send one copy of comments to RailAmerica's representative: Louis E. Gitomer, Of Counsel, Ball Janik LLP, 1455 F Street, N.W., Suite 225, Washington, DC 20005.

FOR FURTHER INFORMATION CONTACT: Julia M. Farr, (202) 565–1613. [TDD for the hearing impaired: (202) 565–1695.]

SUPPLEMENTARY INFORMATION: On November 8, 1999, RailAmerica, Inc. (RailAmerica), and RailTex, Inc. (RailTex), filed a petition for exemption under 49 U.S.C. 10502 from the prior approval requirements of 49 U.S.C. 11323–25 for RailAmerica's acquisition of direct control of RailTex and indirect control of RailTex's 17 rail carrier subsidiaries in common with the rail carriers RailAmerica already controls.[1] Under 49 U.S.C. 11323(a)(5), the acquisition of control of a rail carrier by a person that is not a rail carrier but that controls any number of rail carriers requires the approval of the Board. Because RailAmerica controls Class III rail carriers and is seeking to acquire control of RailTex, which also controls Class III rail carriers, the proposed transaction is within the jurisdiction of the Board.[2] To minimize the period of uncertainty for employees and to permit the petitioners and their customers to realize the projected benefits of the transaction as soon as possible, petitioners have asked the Board to establish an expedited schedule under which comments would be due by December 6, 1999, petitioners' reply would be due by December 15, 1999, and a decision by the Board on the merits of the proposed exemption would be due on January 14, 2000.

RailAmerica controls 12 Class III rail carriers in the United States. Petitioners describe RailAmerica's rail subsidiaries as follows: (1) The Cascade and Columbia River Railroad Company operates 137 miles of rail line in the State of Washington; (2) Dakota Rail, Inc., operates 43.66 miles of rail line in the State of Minnesota; (3) Delaware Valley Railway Company, Inc., formerly operated over approximately 50 miles of rail line in the States of Delaware and Pennsylvania; (4) The Huron & Eastern Railway Company, Inc. (Huron & Eastern), operates approximately 171 miles of rail line in the State of Michigan; (5) the Minnesota Northern Railroad, Inc., operates approximately 241 miles of rail line in Northwestern Minnesota; (6) the Otter Tail Valley Railroad Company operates approximately 72 miles of rail line in Western Minnesota; (7) the Saginaw Valley Railroad Company, Inc. (Saginaw Valley), operates approximately 65 miles of rail line in the State of Michigan; (8) the St. Croix Valley Railroad Company operates over 44.4 miles of rail line in Eastern Minnesota; (9) the South Central Tennessee Railroad Corporation operates 52 miles of rail line in the State of Tennessee; (10) the Ventura County Railroad Company operates approximately 12.09 miles of rail line in the Port of Hueneme, in the State of California; (11) the West Texas & Lubbock Railroad Company, Inc., operates approximately 104 miles of rail line in the State of Texas; and (12) Toledo, Peoria & Western Railway Corporation (TP&W) operates approximately 369 miles of rail line in the States of Indiana, Illinois, and Iowa.

RailTex controls 17 Class III rail carriers in the United States. Petitioners describe RailTex's rail subsidiaries as follows: (1) The Austin & Northwestern Railroad Company, Inc. (AUNW), owns a 107-mile rail line in the States of Texas and New Mexico, which is operated by AUNW's division, the Texas New Mexico Railroad; (2) the Central Oregon & Pacific Railroad, Inc., operates over approximately 449 miles of rail line in the States of Oregon and California; (3) the Central Railroad Company of Indiana operates approximately 157 miles of rail line in the States of Indiana and Ohio; (4) the Central Railroad Company of Indianapolis (CERA) operates approximately 45.6 miles of rail line in the State of Indiana, and operates as agent for, and in the name of, Winamac Southern Railroad Company (WSRY) over approximately 44 miles of rail line in the State of Indiana; (5) the Connecticut Southern Railroad, Inc., operates approximately 78 miles of rail line in the States of Connecticut and Massachusetts; (6) the Dallas, Garland & Northeastern Railroad, Inc., operates approximately 187 miles of rail line and trackage rights over various railroads in the State of Texas; (7) the Georgia Southwestern Railroad, Inc., operates 357 miles of rail line in the States of Georgia and Alabama; (8) the Indiana & Ohio Central Railroad, Inc., operates approximately 154.6 miles of rail line in the State of Ohio; (9) the Indiana & Ohio Railway Company operates approximately 471.1 miles of rail line in the States of Michigan, Ohio and Indiana; (10) the Indiana Southern Railroad, Inc., operates 176 miles of rail

---

[1] Petitioners designated their filing as RAAM–2, which includes the Petition for Exemption (Volume 1), Public Exhibits (Volume 2), Confidential Exhibits (Volume 2A), and Highly Confidential Exhibits (Volume 3).

[2] If, however, the acquisition of control does not involve a Class I railroad and is not part of a series of anticipated transactions that would connect the railroads with each other or any railroad in the corporate family, the transaction is exempt as a class. *See* 49 CFR 1180.2(d)(2). Petitioners state that, given the indirect connection between two of the involved carriers and the possible future connection between two other carriers, discussed in further detail below, the class exemption at 49 CFR 1180.2(d)(2) may not apply to their proposal. Accordingly, petitioners have filed a petition for exemption rather than a notice of exemption.

line in the State of Indiana; (11) the Mid-Michigan Railroad, Inc. (MMRR), and its three subsidiaries (the Grand Rapids Eastern Railroad, the Michigan Shore Railroad, and the Texas Northeastern Railroad), operate approximately 217 miles of rail line in the States of Michigan and Texas; (12) the Missouri & Northern Arkansas Railroad Company, Inc., operates approximately 530 miles of rail line in the States of Missouri, Kansas and Arkansas; (13) the New England Central Railroad, Inc., operates approximately 343 miles of rail line in the States of Vermont, New Hampshire, Massachusetts, and Connecticut; (14) the North Carolina & Virginia Railroad Company, Inc., and its two divisions (the Chesapeake and Albemarle Railroad, and the Virginia Southern Railroad), operate approximately 210 miles of rail line in the States of Virginia and North Carolina; (15) the Pittsburgh Industrial Railroad, Inc., operates 42 miles of rail line in the State of Pennsylvania; (16) the San Diego & Imperial Valley Railroad Company, Inc., operates approximately 153 miles of rail line in Mexico and the State of California; and (17) the South Carolina Central Railroad Company, Inc., and its division (the Carolina Piedmont Railroad), operate approximately 95 miles of rail line in the State of South Carolina.

RailAmerica states that its rail carrier subsidiaries do not connect with any of the RailTex rail carrier subsidiaries except for an indirect connection between the TP&W and CERA via the WSRY line, which CERA operates as an agent for WSRY between Kokomo and Logansport, IN. RailAmerica also states that MMRR may interchange traffic with Huron & Eastern and Saginaw Valley in or near Saginaw, MI, in the future. RailAmerica estimates that the transaction will generate approximately $10 million in annual cost savings. RailAmerica estimates that 21 jobs will be abolished, 10 at RailTex's headquarters in San Antonio, TX, and 11 on various lines. Petitioners state that no unionized employee will be affected by the proposed transaction and that they will not abrogate any collective bargaining agreements.

The Board invites comments on the proposed acquisition. Because the procedural schedule proposed by the petitioners appears to be adequate for full and fair development of the record in this proceeding, the proposed schedule will be adopted. Comments may address such issues as the rail transportation policy of 49 U.S.C. 10101, the potential for market abuse, whether as a result of the proposed transaction there is likely to be substantial lessening of competition, creation of a monopoly, or restraint of trade in freight surface transportation in any region of the United States, and whether any anticompetitive effects of the transaction outweigh the public interest in meeting significant transportation needs.

Comments (an original and 25 copies) must be in writing, and are due by December 6, 1999. Additional information may be obtained from RailAmerica's representative. In addition to submitting an original and 25 copies of all paper documents filed with the Board, parties also must submit, on 3.5-inch IBM-compatible floppy diskettes (disks) or compact discs (CDs), copies of all pleadings and attachments (e.g., textual materials, electronic workpapers, data bases and spreadsheets used to develop quantitative evidence) and clearly label pleadings and attachments and corresponding computer diskettes with an identification acronym and pleading number. Textual materials must be in, or convertible by and into, WordPerfect 7.0. Electronic spreadsheets must be in, or convertible by and into, Lotus 1–2–3 97 Edition, Excel Version 7.0, or Quattro Pro Version 7.0. A copy of each disk or CD submitted to the Board should be provided to any other party upon request.[3] The computer data contained on the computer diskettes submitted will be subject to the protective order[4] granted by decision served on November 3, 1999, in this proceeding.

This action will not significantly affect the quality of the human environment or the conservation of energy resources.

Decided: November 10, 1999.

By the Board, Chairman Morgan, Vice Chairman Clyburn and Commissioner Burkes.

Vernon A. Williams,

Secretary.

[FR Doc. 99–29874 Filed 11–15–99; 8:45 am]

BILLING CODE 4915–00–P

[3] Parties may individually seek a waiver from the disk-CD requirement.

[4] Petitioners filed a motion for protective order (designated RAAM–1) on October 28, 1999.

federal register

Tuesday
November 16, 1999

Part II

Architectural and Transportation Barriers Compliance Board

36 CFR Parts 1190 and 1191

Americans with Disabilities Act (ADA) Accessibility Guidelines for Buildings and Facilities; Architectural Barriers Act (ABA) Accessibility Guidelines; Proposed Rule

ARCHITECTURAL AND TRANSPORTATION BARRIERS COMPLIANCE BOARD

36 CFR Parts 1190 and 1191

[Docket No. 99–1]

RIN 3014–AA20

Americans with Disabilities Act (ADA) Accessibility Guidelines for Buildings and Facilities; Architectural Barriers Act (ABA) Accessibility Guidelines

AGENCY: Architectural and Transportation Barriers Compliance Board.

ACTION: Notice of Proposed Rulemaking.

SUMMARY: The Architectural and Transportation Barriers Compliance Board (Access Board) is proposing to revise and update its accessibility guidelines for buildings and facilities covered by the Americans with Disabilities Act of 1990 (ADA) and the Architectural Barriers Act of 1968 (ABA). These guidelines cover new construction and alterations and serve as the basis for enforceable standards issued by other Federal agencies. As a result of this revision and update, the guidelines for the ADA and ABA are consolidated in one Code of Federal Regulations part. The guidelines for the ABA also cover buildings and facilities leased by Federal agencies. The Department of Justice and the Department of Transportation are responsible for issuing standards based on the Access Board's guidelines under the ADA. ABA standards are issued by the Department of Defense, General Services Administration, the Department of Housing and Urban Development, and the U.S. Postal Service.

DATES: Comments should be received by March 15, 2000. The Access Board will hold two public hearings on the proposed guidelines. The dates, times, and locations of the public hearings will be published in a subsequent document in the **Federal Register**.

ADDRESSES: Comments should be sent to the Office of Technical and Information Services, Architectural and Transportation Barriers Compliance Board, 1331 F Street, NW., suite 1000, Washington, DC 20004–1111. Fax number (202) 272–5447. E-mail comments should be sent to docket@access-board.gov. Comments sent by e-mail will be considered only if they include the full name and address of the sender in the text. Comments will be available for inspection at the above address from 9:00 a.m. to 5:00 p.m. on regular business days.

FOR FURTHER INFORMATION CONTACT: Marsha Mazz (on the ADA Accessibility Guidelines) and Jim Pecht (on the ABA Accessibility Guidelines) Office of Technical and Information Services, Architectural and Transportation Barriers Compliance Board, 1331 F Street, NW., suite 1000, Washington, DC 20004–1111. Telephone numbers (202) 272–5434 extension 121 or extension 128 (voice); (202) 272–5449 (TTY). E-mail address: TA@access-board.gov. These are not toll free numbers.

SUPPLEMENTARY INFORMATION:

Availability of Copies and Electronic Access

This document is available on the Board's Internet site in HTML and PDF formats (http://www.access-board.gov/ada-aba/guidenprm.htm). Persons who want a copy in an alternate format (cassette tape, Braille, large print, or Ascii disk) may order one copy at no cost by calling the Architectural and Transportation Barriers Compliance Board's (Access Board) automated publications order line (202) 272–5434, by pressing 2 on the telephone keypad, then 1, and requesting publication S–36 (ADA and ABA Accessibility Guidelines Notice of Proposed Rulemaking). Persons using a TTY should call (202) 272–5449. Please record a name, address, telephone number and request publication S–36 and specify the type of format.

Statutory Background

The Americans with Disabilities Act of 1990 (ADA) (42 U.S.C. 12101 *et seq.*) recognizes and protects the civil rights of people with disabilities and is modeled after earlier landmark laws prohibiting discrimination on the basis of race and gender. The ADA requires that buildings and facilities be accessible to and usable by people with disabilities. The ADA establishes accessibility requirements for new construction and alterations of State and local government facilities under title II and places of public accommodation and commercial facilities under title III. The law requires that the Access Board issue minimum guidelines to assist the Department of Justice (DOJ) and the Department of Transportation (DOT) in establishing accessibility standards under titles II and III. These standards must be consistent with the Access Board's guidelines.

The Architectural Barriers Act of 1968 (ABA) (42 U.S.C. 4151 *et seq.*) requires that facilities designed, built, altered or leased with certain Federal funds be accessible to persons with disabilities. Similar to its responsibility under the ADA, the Access Board is charged with developing and maintaining minimum guidelines for accessible facilities that serve as the basis for enforceable standards issued by four standard-setting agencies. The standard-setting agencies are the Department of Defense (DOD), the General Services Administration (GSA), the Department of Housing and Urban Development (HUD), and the U.S. Postal Service (USPS).

Rulemaking History

On July 26, 1991, the Access Board published the Americans with Disabilities Act Accessibility Guidelines (ADAAG).[1] On the same day, the Department of Justice published its final regulations implementing title III of the ADA which incorporated ADAAG.[2] The Access Board amended ADAAG to include additional requirements specifically applicable to transportation facilities on September 6, 1991[3] which DOT incorporated into its final ADA regulations.[4] The Access Board modified ADAAG, and DOJ and DOT modified their standards on two occasions: to revise specifications for automatic teller machines (July 15, 1993) and to suspend requirements for detectable warnings at curb ramps, hazardous vehicular areas, and reflecting pools (April 12, 1994; July 29, 1996; November 23, 1998).[5]

The Access Board published amendments to ADAAG on January 13, 1998, that cover State and local government facilities and building elements designed for children's use.[6] The amendments for State and local government facilities add a section on judicial, legislative, and regulatory facilities which covers access to restricted and secured entrances, security systems, assembly seating, speakers' platforms, and to courtroom spaces. Another section covers detention and correctional facilities which provides scoping and technical requirements for accessible cells. In addition to these two new sections, ADAAG was amended to address elevators, entrances, TTYs, sales and service counters, and airport security systems in State and local government facilities. As originally published, ADAAG provided specifications based only on adult dimensions. The

[1] 56 FR 35408, 36 CFR Part 1191.
[2] 56 FR 35544, 28 CFR Part 36.
[3] 56 FR 45500.
[4] 56 FR 45584, 49 CFR Parts 37 and 38.
[5] 58 FR 38204, 59 FR 17442, and 63 FR 64836.
[6] 63 FR 2000 and 63 FR 2060.

amendments for building elements designed for children's use provide alternate specifications based on children's dimensions for drinking fountains, water closets, toilet stalls, lavatories and sinks, and built-in seating and tables. The technical requirements permit departures from existing ADAAG specifications for elements designed for use primarily by children instead of adults.

In 1994, the Board established an advisory committee to conduct a complete review of the guidelines and to recommend changes. The ADAAG Review Advisory Committee consisted of 22 members representing the design and construction industry, the building code community, State and local government entities, and people with disabilities.[7] The committee was charged with reviewing ADAAG in its entirety and making recommendations to the Board on:

- improving the format and usability of ADAAG;
- reconciling differences between ADAAG and national consensus standards, including model codes and industry standards;
- updating ADAAG to reflect technological developments and to continue to meet the needs of persons with disabilities; and
- coordinating future ADAAG revisions with national standards and model code organizations.

The advisory committee organized itself into subcommittees and met extensively over a two year period. Non-members were invited to participate in subcommittee meetings. The advisory committee followed a consensus-based process for the adoption of recommended changes to ADAAG which included a process for the submission of dissenting opinions. The advisory committee's work culminated in publication of a final report, ''Recommendations for a New ADAAG'' (September, 1996), which is available from the Board. Vice President Albert Gore recognized the work of the advisory committee and its constructive relationship with the Board and presented both entities with his ''Hammer Award'' which recognizes exemplary reinvention of the Federal government. The award commended the manner in which a variety of public and private sector interests were brought together to update the guidelines. The advisory committee's report recommends changes to both the format and substance of ADAAG.

The Board developed minimum guidelines for federally funded facilities covered by the ABA in 1982 that served as the basis for the Uniform Federal Accessibility Standards (UFAS). To further the goal of uniform standards, the Board is proposing to update these minimum guidelines based on the revisions to ADAAG. This will establish consistency between both guidelines so that the public and private sectors are held to a similar level of accessibility. This will facilitate compliance where a facility is subject to both the ADA and the ABA, such as a State or local government facility built with Federal money.

The Board's minimum guidelines do not directly impact the public. Instead they provide a minimum baseline for other Federal departments responsible for issuing enforceable standards. Each Federal department responsible for issuing and maintaining standards based on the Board's guidelines under the ADA or the ABA is represented on the Board. Representatives of these departments serve as Board members and staff liaisons and have been closely involved in the development of this proposed rule. Through this process, the Board and the standard-setting agencies coordinated extensively to seek consensus to minimize any differences between the Board's guidelines and their eventual standards.

General Issues

The ADAAG Review Advisory Committee recommended significant changes to the format and style of ADAAG. In fact, their recommendations completely reorganize much of ADAAG. The changes were recommended to provide a guideline that is organized and written in a manner that can be more readily understood, interpreted and applied. The recommended changes would also make the arrangement and format of ADAAG more consistent with model building codes and industry standards. This will make it easier for designers of the many facilities that will be required to comply both with the ADAAG and the locally adopted codes to understand how to comply with both sets of provisions. Changes include:

- removal of text language that is non-mandatory in nature for inclusion as advisory information nearby the text it comments on;
- inclusion in written text of requirements otherwise provided only in figures;
- clearer delineation between scoping requirements, which indicate what has to be accessible, from technical requirements, which specify how access is to be achieved;
- organizing technical sections into chapters according to the type of element or space;
- streamlining the guidelines by integrating special occupancy chapters (except for transportation facilities) into the main body of the document;
- revising the substance of scoping and technical provisions to better meet the needs of people with disabilities, to recognize technological developments, and to reconcile differences from national consensus standards; and
- utilizing a decimal-based, numeric-only numbering system, consistent with that used by the model codes and utilizing, to the extent possible, identical chapter and section numbers as ICC/ANSI A117.1 for the comparable subject matter.

Some changes are recommended in order to make the provisions in ADAAG more technically consistent with model building codes and industry standards. The advisory committee coordinated closely with the American National Standards Institute (ANSI) A117 Committee, which was in the process of updating its standard. This is a national consensus standard that provides technical requirements for accessible buildings and facilities. The Council of American Building Officials (CABO) was represented on the advisory committee. CABO, which functions as a coordinating body among model code organizations, serves as the Secretariat for the A117 Committee. CABO has been incorporated into the International Codes Council (ICC). While ADAAG requirements derive in large part from an earlier version of the ANSI standard, there are considerable differences between them. Both the advisory committee and the ANSI committee sought to reconcile these differences to harmonize the revised ADAAG with the ICC/ANSI A117.1–1998 standard.

The Board reviewed all recommendations from the advisory committee and has adopted most of them with some changes of its own. In addition, the Board has developed new figures to illustrate various provisions and provided new advisory notes that

[7] The American Council of the Blind, the American Institute of Architects, the Arc, Builders Hardware Manufacturers Association, Building Officials and Code Administrators International, Building Owners and Managers Association International, Council of American Building Officials, Disability Rights Education and Defense Fund, Eastern Paralyzed Veterans Association, International Conference of Building Officials, International Facility Management Association, Maryland Association of the Deaf, National Conference of States on Building Codes and Standards, National Easter Seal Society, National Fire Protection Association, National Institute of Building Sciences, Regional Disability and Business Technical Assistance Centers, Southern Building Code Congress International, Texas Department of Licensing and Regulation, Virginia Building and Code Officials Association, and the World Institute on Disability.

provide information currently contained in the appendix to ADAAG. In removing non-mandatory information from the text of the guidelines, the advisory committee made various recommendations on information that should be included in advisory notes. The Board has taken these recommendations into account in developing advisory notes for this proposed rule.

The application and scoping requirements (Chapters 1 and 2) for facilities covered by the ADA have been used as the basis for updating application and scoping requirements for facilities subject to the ABA. The technical requirements of this rule, as revised according to the advisory committee recommendations, are referenced by both scoping documents.

In addition, the Board has included scoping and technical requirements for accessible residential facilities. These requirements are based on updated provisions for residential facilities contained in the ICC/ANSI A117.1–1998 standard. These requirements represent an addition to ADAAG, which currently does not address such facilities. Also, they will serve to update requirements for dwelling units in the minimum guidelines for federally funded facilities upon which UFAS is based.

Section-by-Section Analysis

The following discussion covers the three parts of this rule. Part I covers the application and scoping requirements for facilities covered by the ADA (Chapters 1 and 2). This section of the analysis explains substantive differences between the revised guidelines and the current ADAAG. All changes proposed are based on recommendations from the advisory committee unless otherwise noted. Part II addresses the application and scoping requirements for facilities covered by the ABA. This section explains changes from the scoping and application requirements of Part I that are specific to federally funded facilities. Part III discusses the technical requirements (Chapters 3 through 11) that are referenced by both ADA and ABA scoping documents. These requirements are based on recommendations from the advisory committee. As in Part I, the discussion in Part III explains substantive differences between the current ADAAG and the revised guidelines. The Board has posed a number of questions in this section. The Board includes questions in the preamble usually because it wants to solicit additional information about an item before considering a specific requirement.

Part I: ADA Application and Scoping

Chapter 1: Application and Administration

This chapter states general principles that recognize the purpose of the guidelines (101), provisions for adults and children (102), equivalent facilitation (103), conventions (104), referenced standards (105), and definitions (106). Chapter 1 simplifies and reorganizes similar provisions contained in ADAAG sections 1, 2, and 3.

The Board has removed the term ''fixed'' in the revised guidelines for editorial purposes of clarity and consistency. The term is used in the current ADAAG to describe some elements, such as tables and storage, but not other types of covered elements. The Board understands that DOJ will clarify the application of the guidelines to fixed elements in its rulemaking to update its standards for consistency with the revised guidelines.

104 Conventions

Section 104.1 notes that all dimensions not stated as a ''maximum'' or ''minimum'' are absolute. All dimensions, including absolute dimensions, are ''subject to conventional industry tolerances.'' This corresponds with provisions in ADAAG 3.1 and 3.2 for graphic conventions and dimensional tolerances except for one change. ADAAG 3.2 recognizes conventional building industry tolerances ''for field conditions.'' The reference to ''field conditions'' has been removed to accommodate a wider variety of unavoidable tolerances other than those that occur on a construction site, namely manufacturing processes that are not true ''field'' situations. For example, acrylic molded plumbing fixtures, such as shower stalls, often have a slight draft or taper so that they can be drawn from their molds; this slight taper does not adversely affect accessibility and is a necessary consequence of this particular manufacturing process. ''Conventional industry tolerances'' is intended to refer to tolerances in construction and manufacturing, but not design.

The Board has clarified the calculation of percentages in section 104.2. This provision states that one is to round up to the next whole number when calculating ratios or percentages in determining the minimum number of required accessible elements or facilities. Where the required size or dimension of an element or facilities involves ratios or percentages, rounding down for values less than one half is permitted.

105 Referenced Standards

Section 105 lists the industry standards referenced in the guidelines. It also clarifies that where there is a difference between a provision of the guidelines and the referenced standards, the provision of the guidelines shall apply.

106 Definitions

Various defined terms and definitions have been revised, removed or added. The following definitions have been removed because they contain information more appropriately covered in technical requirements or are not considered necessary due to other text changes: ''access aisle,'' ''accessible element,'' ''accessible space,'' ''adaptability,'' ''clear,'' ''clear floor space,'' ''multi-family dwelling,'' and ''site improvement.'' Several definitions have been simplified by removing information contained in scoping or technical requirements or have been revised for consistency with model code definitions. These include: ''accessible route,'' ''automatic door,'' ''area of rescue assistance,'' ''controls and operating mechanisms'' (which have been changed to ''area of refuge'' and ''operable parts,'' respectively), ''dwelling unit,'' ''facility,'' ''means of egress,'' ''occupiable,'' ''sign,'' ''story,'' and ''transient lodging.'' Defined terms added to this section include: ''characters,'' ''children's use,'' ''destination-oriented elevator,'' ''employee work areas,'' ''mail boxes,'' ''pictogram,'' ''project,'' ''public entrance,'' ''qualified historic building or facility,'' ''self-service storage facility,'' ''technically infeasible,'' ''wheelchair,'' and ''wheelchair space.''

Chapter 2: Scoping Requirements

This chapter provides scoping requirements for spaces and elements required to be accessible in new construction and alterations. Chapter 2 replaces the minimum requirements sections of ADAAG 4.1. As revised, this section of the guidelines differs from ADAAG in that it integrates the scoping for exterior sites and interior facilities. ADAAG addresses scoping for exterior sites and interior facilities in separate subsections (4.1.2 and 4.1.3, respectively). ADAAG also currently has some scoping provisions intermingled with various technical provisions outside of 4.1. All scoping provisions are now located in Chapter 2.

201 Application

This section contains provisions for the general scope of the guidelines and is substantively consistent with

application provisions in ADAAG 4.1.1(1), (2), and (4).

202 Existing Buildings and Facilities

This section provides for the application of the guidelines to additions and alterations. Section 202.2 (Additions) clarifies the intent in ADAAG 4.1.5 that each addition meet the requirements of the guidelines for new construction and also refers to requirements for additions that affect or could affect areas containing a primary function.

Section 202.3 contains general scoping requirements for alterations, which are currently addressed in ADAAG 4.1.6(1). Alterations scoping provisions and technical provisions specific to certain elements and spaces in ADAAG 4.1.6(1) and 4.1.6(3) are not included in this general application section. Instead these provisions have been relocated to the relevant scoping or technical provisions for the element or space. Many of these provisions in ADAAG provide alternate specifications where ''technical infeasibility'' is encountered. However, these specifications present a false ''cap'' to the degree of departure since compliance is actually required to the degree it is technically feasible which may be above or below the level of access recognized in the specification. Consequently, in the revised guidelines, alternate criteria that have been retained have been made applicable to alterations generally and are not limited to instances of technical infeasibility.

As revised, the guidelines do not contain the provision currently in ADAAG 4.1.6(1)(c) which requires an entire space to be accessible when alterations of single elements, considered together, amount to an alteration of a room or space. The advisory committee considered this provision vague and difficult to enforce since it does not indicate the precise number of altered single elements that would trigger full compliance for a room or space. In view of the basic scoping requirements for alterations, the Board agrees this provision can be removed without affecting accessibility.

Section 202.4 addresses requirements for alterations affecting primary function areas that are consistent with those in ADAAG 4.1.6(2) except for one change. ADAAG 4.1.6 (1)(i) clarifies that the requirement does not apply to work limited solely to electrical, mechanical, or plumbing systems; hazardous material abatement; or automatic sprinkler retrofitting if the work does not involve alteration of elements or spaces required to be accessible. While the advisory committee did not recommend removing this clarification, the Board has removed it as information more appropriately contained in the Department of Justice's (DOJ) implementing regulations. The DOJ regulations further address alterations to areas containing a primary function, including the type of alterations that trigger the requirement for an accessible path of travel.[8]

Section 202.5 clarifies that scoping for alterations, including alterations to areas containing a primary function, applies to qualified historic buildings and facilities, but permits an exception where such alterations would threaten or destroy the historic significance of the building or facility as determined by the State Historic Preservation Officer or Advisory Council on Historic Preservation. This simplifies ADAAG 4.1.7 and removes advisory information from the text of the requirement. Special provisions for specific elements and spaces in ADAAG 4.1.7(3) have been moved to appropriate scoping and technical requirements in the revised guidelines.

203 General Exceptions

The structure of the revised guidelines reinforces the principle that under the general scoping, all portions of sites and facilities are subject to the guidelines unless otherwise noted. This section contains exceptions to the general scoping provisions in 201. Most provisions are substantively the same as those in ADAAG 4.1.1(5) as amended for State and local government buildings, including those addressing construction sites (203.2), raised areas (203.4), limited access spaces (203.5), equipment spaces (203.6), single occupant structures (203.7), and detention and correctional facilities (203.8).

There are two substantive changes involving the ''structural impracticability'' exception and residential facilities (203.9). ADAAG 4.1.1(5)(a) provides an exception for new construction where it can be demonstrated that full compliance is ''structurally impracticable'' due to rare circumstances or the uniqueness of the terrain. The advisory committee recommended removing this exception because it felt that the challenges posed by unique environmental or terrain features can be overcome by good design. Further, such an exception is not recognized by any of the model building codes. Despite the fact that the exception for ''structural impracticability'' has been removed from ADAAG, it still exists in the Department of Justice (DOJ) implementing regulations. See 28 CFR 36.401(c). The term is defined in that same section and provides a narrowly drawn exception for ''unique characteristics of terrain.'' It was removed from ADAAG because the Board made every effort not to duplicate provisions that are in the DOJ regulations. The revised guidelines also include an exception in 203.9 under which access is not required to common use areas that do not serve dwelling units required to be accessible.

203.3 Employee Work Areas

ADAAG 4.1.1(3) requires access to, but not fully within, employee work areas in part because title I of the ADA generally treats access for employees with disabilities as an individual accommodation. The Board intends the word ''employee'' in the term employee work areas to include individuals covered in the definition of employee found in title I of the ADA, as well as other individuals who perform employee-type duties such as independent contractors and volunteers. Employee spaces used for purposes other than job-related tasks, such as break rooms, lounges, and locker rooms are not considered ''work areas'' and must be fully accessible. Other areas that must be fully accessible include, but are not limited to, vending areas, cafeterias, and auditoriums regardless of whether they are restricted to employees. Work areas that also function as public use space, such as patient exam rooms, must be fully accessible for public access, but fixtures and controls within the work area used only by employees are not required to be accessible.

Section 203.3 of the revised guidelines retains this exception for areas used only as work areas. Work areas must be accessible for ''approach, entry, and exit,'' which means location on an accessible route so that people with disabilities can enter and exit the space. The Board interprets this provision as requiring an accessible route to work areas, including complying entry doors or gates. Maneuvering space, including wheelchair turning space, is not required within the work area, and elements within the work area are not required to comply. Also, the Board has added a definition for ''employee work areas'' in section 106 to clarify the limited application of this provision.

The coverage of ''employee work areas'' in section 203.3, like ADAAG 4.1.1(3), means that an accessible route is not required to individual work stations within the area. For example,

[8] 28 CFR 36.403.

an accessible route is required to a restaurant kitchen or the manufacturing space of a plant but not to individual work stations, regardless of the number of stations or the size of the work area. The advisory committee recommended that ADAAG be changed to require an accessible route to each ''individual work station'' instead of to ''work areas.'' Other than the connecting route, work stations would not be required to be accessible. The advisory committee recommended this change for consistency with model building codes which, unlike ADAAG, do not provide a similar exception for work areas. The advisory committee considered that contemporary building and fire codes, for general fire and life safety purposes, have always required in new construction and alterations that a path of travel serving individual work stations be provided for exiting in an emergency. In complying with the code, this path of travel would end up complying with most if not all of the accessible route requirements in ADAAG. The advisory committee therefore considered that changing ADAAG to require an accessible route serving individual work stations would not have dramatic impact. This aspect of the model building codes, as well as general exceptions for equipment and other spaces in section 203, would serve to limit the overall impact of this change in the advisory committee's view. Further, the requirement for an ''accessible route'' to such elements, as opposed to access for ''approach, entry, and exit'' to certain spaces was considered clearer and more easily interpreted.

The Board is committed to harmonizing the ADAAG requirements with the requirements of the model codes and believes that covered entities should apply the recommendations of the advisory committee in most situations, particularly in traditional places of public accommodation, in office buildings, and in schools. However, the Board is concerned that the adoption of this requirement as the minimum level of compliance may prove to be unworkable in some employment settings. Therefore, the Board has not included the advisory committee's recommendations in this proposed rule. However, the Board is considering whether to include the advisory committee's language in the final rule. To facilitate this decision, the Board is seeking responses to the following questions:

Question 1: ADAAG requires that an accessible route be provided to employee work areas, but not to individual work stations. What obstacles have people with disabilities encountered as a result of this provision?

Question 2: The Board is interested in learning what the impact might be if ADAAG requires access to ''individual work stations'' rather than to ''employee work areas.'' For example, how would a facility otherwise be designed and built in the absence of this revised requirement in ADAAG? Any comparative analysis should be based on a design that reflects compliance with contemporary codes, such as the model building codes, and typical design practice. In other words, aspects of an accessible route that would otherwise be provided as a typical design consideration or that would have to be provided in order to comply with a contemporary building code would not be sources of real impact.

Question 3: Are there specific types of individual work stations, not otherwise exempt from access by section 203, that could not be served by an accessible route?

Question 4: The phrase ''areas used only by employees as work areas'' has been misinterpreted or considered unclear. If this requirement is retained in the final rule, how should it be clarified to prevent misinterpretation? If a requirement for work stations is included in the final rule, is the term ''individual employee work stations'' sufficiently specific or is further clarification, qualification, or definition needed?

The revised guidelines differ from ADAAG in that they require employee work areas to be equipped with visual alarms where audible alarms are provided. In effect, this will require visual alarm appliances in most work areas. Where work areas are enclosed by opaque doors and walls, visual alarm appliances will be necessary to provide the required alarm coverage. However, where work areas have translucent walls or doors, carefully placed alarm appliances in adjoining corridors or other spaces can cover the work area. This is a change from current ADAAG, which requires visual alarms in common use and public use spaces, but not in those spaces that serve only as a work area. The Board proposes this change because it is an issue of life safety and because installation of visual alarms after construction can be difficult and expensive. However, in addition to an accessible connecting route, visual alarms would be the only accessible element required for a work area.

The Board estimates that the aggregate cost associated with providing visual alarms in employee work areas for newly constructed buildings is approximately $16.3 million. This estimate is based on several assumptions: (a) an average office building size is 200,000 square feet with 200 square feet per office; (b) the cost of an alarm system complying with existing requirements is $225,000 and approximately 60 to 70 percent of the area of the office building receives visual alarm coverage; (c) visual alarms will be needed in an additional 25 percent of the building area (50,000 square feet, 250 offices) to meet the proposed new requirement; (d) the additional cost for installing the visual alarms in employee work areas is $65,375 ($261 per office); (d) 250 office buildings (averaging 200,000 square feet) are newly constructed each year.

Question 5: This provision would be applicable to both newly constructed buildings and existing buildings when alarm systems are replaced or upgraded, and these alterations affect the usability of the building. The Board does not provide an aggregate cost estimate for existing buildings when alarm systems are altered. The Board recognizes that this cost may greatly exceed the cost for newly constructed buildings. In order to better assess the overall cost of this provision, the Board seeks data on how frequently alarm systems are replaced or upgraded such that they would amount to an alteration and be subject to this provision. The Board has been advised that alarm systems may be replaced as often as every ten years. The reason given is that building owners desire to reduce insurance liability, as well as to provide state-of-the-art protection for building occupants. Is it correct to assume that alarm systems are replaced every ten years? The Board seeks information from businesses that provide fire alarm systems regarding the additional cost of providing visual alarms in employee work areas when alarm systems are replaced or upgraded. Please provide cost data for alarm systems with visual alarm coverage in all employee work areas compared to alarm systems complying with the existing requirements. Lastly, while an average building size is used in developing the cost estimate for newly constructed buildings, the Board seeks comment on whether the provision would have a disproportionate economic impact on small buildings or businesses.

Question 6: Are there less costly alternatives to providing visual alarms in all employee work areas for employees who are deaf or are hard of hearing that provide a comparable level of life safety?

Question 7: Concerns have been raised about limiting the number of

visual alarms for the benefit of people who are photosensitive, as further discussed below at section 702.3. In view of these various considerations, comment is sought on the appropriateness of this requirement, and information is requested on whether there are means available for deactivating individual visual appliances (which may be desired in accommodating employees who are photosensitive) without rendering the entire system ineffective.

Section 203.9 clarifies that in residential facilities access is not required in common use areas not serving required accessible dwelling units. The Board added this provision because guidelines for residential facilities have been included in this rule. This provision would apply in situations where certain common use areas, such as laundry rooms, are intended to serve a portion of dwelling units.

204 Protruding Objects

205 Operable Parts

Sections 204 and 205 are substantively consistent with scoping requirements for protruding objects in ADAAG 4.1.2(3) and 4.1.3(2) and for controls and operating mechanisms in ADAAG 4.1.3(13).

206 Accessible Routes

ADAAG addresses scoping for accessible routes in several areas (4.1.2, 4.1.3, and 4.3). The revised guidelines bring these requirements together into one subsection (206.2) to clarify the requirement for accessible routes from site arrival points, within the site and within buildings and facilities, and to spaces and elements. The revised guidelines more clearly recognize various elements as components of accessible routes. Thus, this section integrates scoping for entrances (206.4), doors and doorways (206.5), elevators (206.6), and wheelchair (platform) lifts (206.7). Changes from ADAAG include:

- clarification that an accessible pedestrian route is not required where only a vehicular way not serving pedestrians is provided (206.2.1 and 206.2.2, exceptions);
- emphasis on the provision of an ''accessible route'' between floors as opposed to an ''elevator'' so that elevator exceptions in ADAAG 4.1.3(5) are relocated to the requirement for an accessible route (206.2.3);
- clarification that in assembly areas an accessible route is not required to serve seating that does not contain wheelchair spaces or designated aisle seats required to be on an accessible route (206.2.3, exception 6);
- clarification that an accessible route between seating and performance areas is required where a direct connection is provided (206.2.6);
- clarification that where the circulation path is interior, the accessible route must be interior as well (206.3);
- removal of the requirement in ADAAG 4.1.3(8) that accessible entrances be provided in a number at least equal to the number of exits required because entrances and exits serve different functions and should not be linked in scoping requirements;
- removal of a requirement in ADAAG 5.7 for an accessible route to raised platforms in banquet rooms since it is premised on elements (head tables and speaker's lecterns) that often are not fixed;
- extending the scope of requirements for security check points and security barriers for airports and certain State and local government facilities to cover all types of facilities that provide security check points and barriers (206.8); and
- removal of ADAAG exception 4(d) to 4.1.3(5) that allows the use of wheelchair lifts where ''existing site constraints or other constraints make use of a ramp or an elevator infeasible'' since this is not considered warranted in new construction.

In addition, several substantive changes are provided that pertain to elevators (206.6). These include recognition of two alternatives to the traditional type of elevator required by ADAAG and the addition of a requirement for altered elevators.

Destination-oriented elevators are different from typical elevators in that they provide a means of indicating the desired floor at the location of the call button, usually through a key pad, instead of a control panel inside the car. Responding cars are programmed for maximum efficiency by reducing the number of stops any passenger experiences. ADAAG does not specifically address this type of elevator, which was not widely in use when ADAAG was first published. The revised guidelines require compliance with newly added technical requirements in 407.3 where destination-oriented elevators are provided instead of traditional types of elevators. There are differences in the technical requirements provided in section 407. For example, standard elevators must provide audible and visual car position indicators that identify floors as they are passed. With destination-oriented elevators, audible and visual indicators must be provided indicating the car destination both when the car arrives in response to the call and when it arrives at the floor destination.

The revised guidelines also permit installation of limited-use/limited-application (LULA) elevators in buildings and facilities not required to have a standard elevator. This type of elevator is characterized by a smaller car among other things. The revised guidelines provide technical requirements in 407.4 and require compliance with the industry safety standard (ASME/ANSI A17.1, Part XXV). The advisory committee recommended addressing LULAs because it considered such elevators a more viable option in situations where a standard elevator is not required. The advisory committee reasoned that some vertical access (via a LULA elevator) is preferable to none.

Question 8: Consistent with ADAAG, the revised guidelines provide an exception for private sector facilities based on the number of stories or the square footage per floor (206.2.3, exception 1). A much narrower exception is permitted for State and local government facilities (206.2.3, exception 2). Are there situations where the use of LULA's should be permitted instead of a standard elevator in certain small State or local government facilities?

A requirement has been added at 206.6.1 that when an elevator is altered, all elevators programmed to respond to the same hall call control shall be brought into compliance so that persons with disabilities are not limited to the use of one car at multi-car elevator banks.

207 Accessible Means of Egress

Requirements for accessible means of egress have been modified for consistency with model building codes and standards, including addition of a new requirement that an elevator be provided as an accessible means of egress in buildings with four or more stories above or below the exit discharge level. The requirement in ADAAG 4.1.3(9) that accessible means of egress be provided in the ''same number'' of required exits has been changed to require at least two accessible means of egress where more than one means of egress is required. The requirement in ADAAG 4.1.3(10) that accessible routes also serve as required exits has been removed because not all accessible routes necessarily have to serve as a required means of egress in order to provide a reasonable minimum level of safety. The reference to ''areas of rescue assistance'' has been changed to ''areas of refuge'' for consistency with model

codes. Exceptions from the requirement for areas of refuge in facilities that are altered or those equipped with supervised automatic sprinkler system have been retained. A new exception clarifies that areas of refuge are not required in open parking garages since the open design permits smoke to escape.

208 Parking Spaces

The revised guidelines maintain the general scoping of ADAAG in 4.1.2(5) but refer to parking spaces generally, instead of to ''self-parking by visitors, employees, or both.'' The Board has added an exception in 208.1 for parking spaces used exclusively for buses, trucks, delivery vehicles, law enforcement vehicles, and vehicular impound and motor pool lots where lots accessed by the public are provided with an accessible passenger loading zone.

ADAAG 4.1.2(5)(d) requires a higher level of scoping for outpatient units and facilities (10%) and those that ''specialize in treatment or services for persons with mobility impairments'' (20%). Sections 208.2.1 and 208.2.2 preserve these scoping requirements but clarify their application to visitor and patient parking (so as to exclude employee parking); ''hospital outpatient facilities'' (10%); and ''rehabilitation facilities and outpatient physical therapy facilities'' (20%). The advisory committee had recommended removing the 10% requirement for outpatient facilities because it questioned the technical basis for it and because the term ''outpatient facility'' is too broad and can be misapplied to doctors' offices and clinics. Instead of removing this requirement, the Board has clarified its application by limiting it to outpatient facilities located in hospitals. The requirement for ''rehabilitation facilities'' is intended to cover facilities providing physical rehabilitation, but not those facilities providing other types of rehabilitation, such as drug or alcohol rehabilitation.

New scoping provisions for residential facilities have been added. Section 208.2.3 provides access to at least one parking space for each accessible dwelling unit where parking is provided. Two percent of any additional parking spaces provided for residents must be accessible. Additionally, guest parking must be made accessible in accordance with Table 208.2. In 208.4.2 dispersion is required throughout all types of parking provided for dwelling units required to be accessible unless equal or greater accessibility is otherwise achieved.

Requirements for identification of accessible spaces in 208.3 allow spaces not to be identified (*i.e.*, reserved solely for use by people with disabilities) where five or fewer spaces in one parking lot are provided. This was recommended by the advisory committee in order to mitigate the impact of a reserved space in very small lots and is based on the model building codes. Identification of spaces is not required at residential facilities where parking spaces are assigned to specific dwelling units. The requirement for the ''van accessible'' designation has been removed to clarify that both car and van drivers can use such spaces, as was the original intent of ADAAG.

ADAAG 4.1.2(5)(e) allows an accessible passenger loading zone instead of accessible parking spaces at facilities with valet parking. This provision has been removed for several reasons. Valet parking often is not available at all hours a facility is open or may be later removed altogether. Further, vehicles specially equipped for persons with disabilities may not be usable by other drivers.

209 Passenger Loading Zones

This section requires that where a passenger loading zone is provided, at least one portion within every continuous 100 feet of loading zone space must be accessible. This replaces the requirement in ADAAG 4.1.5(c) for only one accessible passenger loading zone per site. The new requirement is responsive to facilities, such as airports, where many or long continuous passenger loading zones are provided. The advisory committee recommended that all passenger loading zones be required to be accessible. However, the proposed requirement addresses situations where continuous loading zones are provided and balances the needs of people with disabilities and the costs associated with adding an additional lane for accessible passenger loading.

210 Stairways

This provision requires all stairs that are part of a means of egress to comply with the guidelines. ADAAG 4.1.3(4) requires compliance only at stairs connecting levels not connected by a vertical means of access. The advisory committee recommended this change for consistency with model building codes that recognize the importance of accessible safety features in successfully exiting by stairs. Accessible features in stairways will benefit individuals with mobility impairments, as well as other individuals with and without disabilities. An exception is provided for alterations. Under this exception, stairs between levels that are connected by an accessible route are not required to comply (except for handrails) due to the potential difficulty of altering stairs for compliance within existing space limitations.

211 Drinking Fountains and Water Coolers

This provision requires that where one drinking fountain or water cooler is provided on a site, floor, or within a secured area, access shall be provided for both people who use wheelchairs and for standing persons. Where more than one drinking fountain is provided, 50% are required to be wheelchair accessible and 50% are required to be accessible to standing persons (with rounding up or down permitted where an odd number of units is provided). While substantively consistent with ADAAG 4.1.3(10), this section clarifies the application to exterior units and the coverage of units accessible to standing persons where more than one unit is provided. The advisory committee recommended that the guidelines not address access for standing persons because no technical criteria are provided and because it believed that most drinking fountains would accommodate people who have difficulty bending. The Board believes that access for people who may have difficulty bending or stooping should be retained and has included technical requirements for such access (see 602.7).

212 Sinks, Kitchens, Kitchenettes, and Wet Bars

A requirement has been added that where sinks are provided in accessible spaces, at least 5% (but not less than one) must be accessible, except for mop or service sinks, which are exempt. While ADAAG provides technical requirements for sinks in 4.24, it does not indicate the minimum number required to be accessible. New scoping provisions for kitchens, kitchenettes, and wet bars are generally consistent with transient lodging requirements in ADAAG 9.2.2(7). The revised guidelines extend the application to kitchens, kitchenettes, and wet bars provided, without regard to the type of facility.

213 Toilet and Bathing Facilities

This section is consistent with ADAAG scoping provisions in 4.1.3(11), 4.22, and 4.23 except for one substantive change. Where multiple single-user toilet rooms are clustered at a single location and contain fixtures in excess of the minimum required number of plumbing fixtures, at least 5% of toilet rooms (but not less than one) for

each use at each cluster is required to be accessible (213.2, exception 4). ADAAG, which does not specifically address this situation, requires access to all such toilet rooms. The advisory committee recommended this scoping provision as more appropriate since this arrangement is common in facilities such as medical facilities. Additionally, revisions have been made to clarify that:

- access is not required for toilet or bathing facilities in transient lodging guest rooms (except for the clearance of entry doors), patient or resident sleeping rooms in medical care facilities, holding or housing cells in detention and correctional facilities, or dwelling units that are not required to be accessible (213.2, exceptions 5, 6, 7, and 8);
- unisex bathing rooms must contain at least one accessible shower or bathtub (213.2.1); and
- where only one lavatory is provided, it shall not be located in an accessible toilet compartment (213.3.4).

214 Laundry Equipment

A new scoping provision has been added for laundry equipment and applies to laundry facilities wherever provided. For example, if a transient lodging facility provides laundry facilities for guests, they must be accessible and contain one or more accessible washers and dryers. This section also addresses the need for accessible laundry facilities in, or serving, accessible dwelling units and is necessary since the revised guidelines address residential facilities. Where washing machines or clothes dryers are provided in spaces required to be accessible, at least one of each type is required to be accessible.

215 Emergency Alarm Systems

The requirement for emergency alarm systems is consistent with ADAAG 4.1.3(14). The ADAAG exception that allows such systems to be modified in medical care facilities to suit health care alarm practice has been revised as an exception to the charging statement for the technical section on fire alarm systems (702.1). The advisory committee had recommended that the provision be limited to fire alarm systems for consistency with model codes such as National Fire Protection Agency (NFPA) 72–G. The committee also recommended that an exception for alterations be provided that would require compliance with the requirement for visual alarms only where an alarm system is upgraded or replaced or a new one installed. Instead, the Board is proposing to retain the substance of the current requirement since compliance with any requirement in alterations is required to the extent it is ''technically feasible.'' Given the scope of the work, replacement of a fire alarm system is considered an alteration, not normal maintenance. However, certain upgrades are alterations only if they affect the usability of a room or space. The usability of the space is not affected when a few failing appliances are replaced. The Board has limited the requirement for visual appliances to fire alarm systems instead of ''emergency warning systems.'' In addition, the Board has added a scoping provision that requires other types of alarm systems to be equipped with audible and visual signals but has not provided any technical criteria for these signals.

Question 9: The Board seeks information on facility alarm systems (other than fire alarm systems) that do not instruct occupants to evacuate the facility but provide other warning information, such as those used for tornado warnings and other emergencies. Recommendations are requested on the technical criteria appropriate for the audible and visual signals for such alarm systems, particularly where differentiation from fire alarm system signals is important.

216 Signs

This provision retains the substance of scoping for exterior and interior signs in ADAAG 4.1.2(7) and 4.1.3(16). Several editorial changes are included for clarification. Scoping for tactile signs is modified to apply to ''permanent'' room or space designations in order to clarify coverage of signs that are not likely to change. The Board has added an exception stating that signs designating building addresses or building names are not required to meet requirements for tactile signs. These revisions are consistent with the Board's interpretation of ADAAG.

ADAAG 4.1.7(3)(e) includes a provision for qualified historic facilities which recommends that exhibits and signs displayed horizontally should be no higher than 44 inches above the floor so as to be accessible to be people seated in wheelchairs. The advisory committee recommended that this provision be made mandatory or relocated to an advisory note. The Board believes this specification and its limited application to qualified historic facilities merits further evaluation before adopting it as a mandatory requirement. Consequently, this provision is not included in the revised guidelines.

217 Telephones

Scoping provisions for public pay telephones providing wheelchair access and volume controls are substantively consistent with ADAAG 4.1.3(17)(a) and (b). The Board has provided clarification in 217.1 that scoping applies to one of each type of pay phone provided, including, but not limited to, coin-operated and coinless public pay phones. For example, access is not limited to credit card phones where coin-operated phones are also provided or vice versa. As recommended by the advisory committee, an exception at 217.3 indicates that, where all phones are equipped with volume controls, identifying signage is not required.

Significant changes are proposed for the provision of TTYs. TTYs are devices that provide access to telephones for people who have hearing or speech impairments. At the advisory committee's recommendation, the preferred term ''TTY'' has been used instead of the term ''text telephone'' or ''TDD'; the definition of TTY in section 106 explains that the term is synonymous with ''text telephones'' and encompasses devices known as ''TDDs,'' a term which stands for ''telecommunication display devices'' (or ''telecommunication devices for deaf persons''). ADAAG 4.1.3(17)(c) generally requires that at least one TTY be provided on a site where four or more public pay telephones are provided (and at least one is interior). The advisory committee and the Board consider this requirement inadequate because it does not take into account large sites such as college campuses and shopping malls where people who need TTYs are limited to one TTY-equipped phone. The revised scoping at 217.4 states that in private buildings (*i.e.*, places of public accommodation and commercial facilities) where four or more pay phones are provided at a bank, within a floor, building, or on a site, a TTY is required at each such location. Consistent with previous amendments to ADAAG for State and local government facilities, a lower threshold is provided for public buildings, where one pay telephone on a floor or within a public use area of a building triggers the requirement for a TTY. An exception for the requirement at banks (271.4.1) makes optional TTYs at banks that are within 200 feet of, and on the same floor as, a bank with a TTY. This exception allows reasonable dispersion without triggering a requirement for additional TTYs. The revised provision does not limit scoping to where at least one pay telephone is interior since TTYs for exterior application are readily available.

A new scoping provision is provided for rest stops, emergency roadside stops, and service plazas that requires a TTY

where at least one public pay telephone is provided since telecommunications can be critical at such locations and searching for off-highway TTYs would be impractical. Due to the increased scoping, a TTY requirement specific to stadiums, arenas, conventions centers, etc. in ADAAG 4.1.3(17)(c)(ii) has been removed. Scoping requirements for hospitals and the secured areas of detention and correctional facilities have been retained.

In addition to the advisory committee's recommendations, Board changes include:

- adding a requirement for TTY signage where directional signs for public pay telephones is provided (271.4.9.2); and
- exempting phone banks with TTYs from the requirement for shelves and outlets for portable TTYs (217.5).

218 Transportation Facilities

This provision requires transportation facilities to comply with Chapter 10. Transportation is the one occupancy type (in addition to the chapter the Board has added on residential facilities) that the advisory committee recommended remain a separate chapter. Scoping for other occupancy types covered in ADAAG sections 5 though 12 have been integrated into Chapter 2.

219 Assistive Listening Systems

This section covers requirements for assistive listening systems and receivers in assembly areas. Section 219.2 requires an assistive listening system in each assembly area where audible communication is integral to the space and audio amplification is provided. However, in courtrooms, this requirement also applies where audio amplification is not provided, consistent with ADAAG as amended for judicial facilities. This provision is substantively different from ADAAG 4.1.3(19) in three respects. First, ADAAG requires assistive listening systems in assembly areas without audio amplification if the seating capacity is 50 or more, and the revised guidelines do not, except in courtrooms (regardless of seating capacity). Second, ADAAG's requirement is conditioned on the provision of fixed seats; the revised guidelines would apply to assembly areas with fixed seating and those without. Third, ADAAG requires that assembly areas not subject to the requirement for a ''permanent'' system be equipped with the necessary electrical outlets and wiring for a portable system; the revised guidelines do not specify a ''permanent'' system and do not require outlets and wiring for portable systems. These also represent changes from the advisory committee's report, which recommended a scoping provision generally consistent with ADAAG. The Board is proposing these changes because it believes that any assembly area with audio amplification should be equipped with an assistive listening system whether or not seating is fixed. The Board removed the requirement in ADAAG for outlets and wiring because adequate electrical support is generally available in these assembly occupancies and because the provision of a portable system is more appropriately covered by the DOJ regulation, which contains requirements for the provision of auxiliary aids and services necessary to ensure effective communication.[9]

Section 219.3 specifies the minimum number of receivers according to a sliding scale. This is a change from the flat 4% requirement in ADAAG 4.1.3(19) and was recommended by the advisory committee based on actual and anecdotal evidence that the current requirement exceeds the demand especially in large facilities. Scoping of 4% is maintained for a seating capacity up to 500 seats; seating above this number is reduced to 3.5% (501 to 1000 seats), 2.75% (1001 to 2000 seats), and 1% (over 2000 seats). The revised guidelines include a requirement which is not in ADAAG that a portion of receivers (25% but no less than 2) be compatible with hearing aids. In effect, this requires provision of neck loops, which are the only type of receiver that can be used comfortably with all models of hearing aids equipped with a telecoil.

220 Automatic Teller Machines and Fare Machines

This provision is consistent with ADAAG 4.1.3(20) with respect to automatic teller machines, but it also addresses ''fare vending, collection, or adjustment machines,'' which are only addressed by ADAAG where provided in transportation facilities.

221 Assembly Seating

This section is substantively different from ADAAG requirements and advisory committee recommendations for wheelchair, companion, and designated aisle seating. Section 221.1 lists the types of assembly areas covered: ''a motion picture house, theater, concert hall, stadium, arena, auditorium, convention center, lecture hall, courtroom, legislative chamber, or similar assembly area.'' This approach of defining the section's coverage by providing a list of exemplary covered entities is a departure from that in the existing ADAAG 4.1.3(19), which describes covered entities as ''places of assembly with fixed seating.'' By limiting coverage to the listed entities and ''other similar assembly areas,'' the revised guidelines clarify that assembly areas like libraries or restaurants are not required to comply with the requirements of 221.

Section 221.2 revises the number of wheelchair spaces required (Table 221.2.1). For a seating capacity up to 50 spaces, the requirement is the same as ADAAG 4.1.3(19). For a seating capacity of 51 to 150 seats, 4 wheelchair spaces are required, and for a seating capacity of 151 to 300 spaces, 5 wheelchair spaces are required. The remainder of the table coincides with ADAAG. The advisory committee recommended the scoping increase (although it recommended that 5 wheelchair spaces be provided starting at 101 seats instead of 151). Also, the advisory committee recommended that scoping for a seating capacity over 500 be reduced from 1% to 0.5% based on anecdotal information on usage. The Board is not persuaded by this anecdotal information and is proposing to retain the ADAAG requirement of 1%. Section 221.2 also states that wheelchair spaces shall be provided in each luxury box, club box, and suite. This is consistent with Department of Justice interpretations of ADAAG that treat each such box or suite as a discrete assembly area. Wheelchair spaces must be integrated into the general bowl design and seating plan and cannot be set aside on a separate platform or level where there is little or no other seating. Integration of wheelchair spaces will provide opportunities for social interaction with persons sitting in the closest seats.

The advisory committee recommended that wheelchair spaces be clustered and specified the number of wheelchair clusters permitted, which, in effect, served to govern the minimum level of dispersion. The advisory committee also recommended a reduced level of dispersion where sight lines require more than one step for a rise in elevation between rows and in alterations where dispersion is not technically feasible. The Board has not adopted this recommendation. The Board has included requirements for dispersion as a technical requirement (see 802).

Section 221.3 contains a requirement included by the Board that a companion seat be provided for each wheelchair space and that this seat be readily removable to create an additional wheelchair space. This is consistent with current interpretations of the

[9] 28 CFR 36.303 and 28 CFR 35.160.

requirement for one companion seat to be provided next to each wheelchair seating area. However, ADAAG 4.33.3 requires companion seats to be fixed but does allow readily removable seats to be installed in wheelchair spaces. The revised provision will afford greater flexibility in seating arrangements by allowing the choice of either a companion seat or another wheelchair space next to each required wheelchair space. The Board considered other options for addressing problems presented by fixed companion seating. Those options included: requiring a lesser number of fixed companion seats than wheelchair spaces in larger assembly areas; requiring that a specified number of wheelchair spaces be designated to accommodate a group of three or more persons using wheelchairs; or opting for no change from the requirement in the current ADAAG. The requirement for readily removable companion seating was chosen for simplicity, because it promotes greater flexibility in the seating configurations. However, the Board has included an exception providing that fixed companion seating is permitted in assembly areas with a capacity of 300 or fewer seats. This exception is provided because the requirement for removable companion seats would have a disproportionate impact on smaller assembly facilities where no more than five wheelchair and companion spaces are required.

Question 10: The Board seeks information on the impact of the requirement that each wheelchair space have an adjacent companion seat that can be removed to provide an adjoining wheelchair space. Of particular interest are recommendations on design solutions or alternative scoping requirements that will mitigate the space impact while affording a similar level of flexibility in seating arrangements.

Question 11: The Board believes that readily removable seats should provide a companion with virtually the same experience in terms of comfort and usability as fixed seats in the same assembly facility. What specific characteristics should the readily removable seat have when compared to other seats? While a metal folding chair is not equivalent to a plush theater-style seat, is it sufficiently comparable to a bleacher seat?

Section 221.4 requires that 1% of seats be designated aisle seats. At least 25% of the designated aisles seats must be on an accessible route, and the remainder no more than two rows from an accessible route. ADAAG 4.1.3(19) provides a similar requirement that 1% of seats be aisle seats with removable, folding, or no armrests. This requirement is intended to serve people who may have difficulty walking between rows of seats, use assistive devices for ambulation, or wish to transfer from wheeled mobility aids. The advisory committee did not recommend retaining this requirement because, with respect to wheelchair transfers, questions arise about the proximate storage of mobility aids and the potential obstruction of aisles by mobility aids. Further, the advisory committee noted that ADAAG did not require an accessible route to such seats, which brought into question the usefulness of this requirement for people wishing to transfer from wheelchairs to seats. The Board has included a requirement for a portion of aisle seats to be on accessible routes for people using wheelchairs who wish to transfer to seats. Since aisle seats also benefit people who have difficulty walking, including between rows of seats, but who can use stairs, the remainder of seats can be separated from the accessible route by no more than two rows.

Question 12: At least 1% of seats must be designated aisle seats that have folding or removable armrests or no armrests. The Board seeks information on the cost and related design impacts of locating at least 25% of these designated aisle seats on an accessible route and of locating the remainder of such seats no more than two rows from an accessible route.

Section 221.5 provides a new requirement that where elevators or wheelchair lifts are provided on an accessible route to wheelchair spaces or designated aisle seats, they shall be provided in ''such number, capacity, and speed'' in order to provide a level of service equivalent to that provided in the same seating area to patrons who can use stairs or other means of vertical access. The Board added this requirement to ensure an equal level of convenience between accessible seating and inaccessible seating. Architects plan for efficient ingress and egress when they design assembly facilities, particularly stadiums. Designers should have available circulation data that is part of the architectural program and design. Generally, designers of new facilities have sufficient knowledge of the travel time between points (*e.g.*, between the entry gate and seats or between the seats and concession stands) to comply with this requirement for equivalent vertical access.

222 Dressing, Fitting, and Locker Rooms

This provision is generally consistent with ADAAG 4.1.3(21), but it also specifically references locker rooms in order to clarify the intended application. An exception permitting unisex facilities for altered dressing, fitting, or locker rooms derives from a similar provision in ADAAG 4.1.6 (3)(h).

223 Medical Care Facility Patient or Resident Sleeping Rooms

This provision is substantively the same as ADAAG 6.1 in providing scoping for patient or resident sleeping rooms. The revised guidelines clarify coverage of ''licensed medical and long-term care facilities.'' The description of the facilities covered has been simplified by removing the ADAAG reference to medical facilities ''where persons may need assistance in responding to an emergency,'' as the advisory committee considered this portion of the description not useful. Scoping for alterations and additions in ADAAG 6.1(4) has been simplified in stating that the minimum percentage is to be based on the total number of sleeping rooms added or altered.

While section 223 specifies the minimum number of sleeping rooms required to be accessible in medical care facilities, it does not specify dispersion among different types of sleeping rooms. The Board believes that accessible bedrooms should be dispersed among all units or departments providing overnight stay and among different classes of rooms, such as private, semi-private, etc. Industry practice and needs assessment can be used to further determine the distribution. For example, a greater number of accessible sleeping rooms might be located in general surgical units than in pediatric or obstetric wards. However, the use and designation of units or types of rooms often change over time as needed.

Question 13: The Board seeks comment on how dispersion of accessible sleeping rooms can be effectively achieved and maintained in medical care facilities such as hospitals and long term care facilities. A requirement for such dispersion may be included in the final rule.

224 Transient Lodging Guest Rooms

The minimum number of accessible guest rooms required has not been changed from that provided in ADAAG 9.1.2. However, Table 224.2 clarifies that guest rooms with roll-in showers are to be provided in addition to the basic number of required accessible

guest rooms. In addition, there are two substantive changes that are also based on the advisory committee's recommendations. First, section 224.3 is new and addresses the number of beds required to be accessible for situations such as homeless shelters, where a room may have a large number of beds. Scoping is provided in Table 224.3.

Second, the Board has significantly revised the scoping provisions in section 224.4 for the number of guest rooms equipped with accessible communication features, including visual alarms and devices that provide visual notification of incoming telephone calls and door knocks or bells. ADAAG 9.1.3 provides a minimum number according to a sliding scale based on the total number of rooms provided. It requires 1 in 25 rooms to comply up to a guestroom count of 100. Scoping successively decreases to 1 for every 50 rooms for the next 101 to 200 rooms and to 1 for every 100 rooms for the next 201 to 500 rooms. For facilities with 501 to 1000 rooms, 2% of rooms must comply and where the room count exceeds 1000, the scoping drops to 1%. ADAAG 9.2.2(8) requires that all wheelchair accessible rooms be equipped with accessible communication features in addition to a number of rooms required to provide communication access only. The Board is proposing to increase the minimum number of rooms that provide accessible communication features to 50% of the total number of guest rooms provided. This increase is proposed for several reasons. The communication features addressed in this requirement address life safety in providing visual notification of fire alarms for people who are deaf or hard of hearing. Higher scoping will also afford greater flexibility in the guest room assignment of people who are deaf or hard of hearing, particularly in light of revisions to technical requirements for visual alarms in section 702.3 that effectively preclude the use of portable visual alarm devices. Further, anecdotal evidence indicates that operational alternatives used in accommodating individuals who are deaf or hard of hearing, including the use of portable devices and facility staff to directly alert guests of the need to evacuate the facility, are unreliable and ineffective.

Question 14: Permanent installation of visual alarm appliances is considerably cheaper and easier to achieve as part of facility design and construction than as a retrofit. The Board requests information on the new construction cost difference between providing visual alarms and notification devices for incoming telephone calls and door knocks or bells according to the scoping in ADAAG 9.1.3 and the proposed 50% scoping requirement. Information is also sought on whether exceptions should be provided for altered facilities or additions.

Question 15: It is the Board's understanding that some transient lodging facilities, particularly hotel chains, have adopted voluntary policies requiring permanently installed visual alarms in all or a majority of newly constructed guest rooms. Please provide information regarding those transient lodging facilities that have such a policy. Are there less costly alternatives to providing visual alarms in fifty percent of guest rooms that will provide guests who are deaf or are hard of hearing a comparable level of life safety?

Section 224.5 requires dispersion of accessible rooms among the various classes of rooms provided, including room type, bed type, and other amenities to a degree comparable to the choices provided other guests. This is similar to a requirement in ADAAG 9.1.4(1). A clarification has been added that when complete dispersion is not possible due to the number of rooms required to be accessible, dispersion is to be provided in the following order of priority: room type, bed type, and amenities. The advisory committee recommended that the factors for dispersion were more appropriate for advisory information. The Board has retained this provision in the text of the rule since it contains mandatory direction. Consistent with the advisory committee's recommendation, section 224.5 also requires communication access in 50% of the wheelchair accessible guestrooms in addition to the requirement in section 224.4. This differs from ADAAG 9.2.2(8) which requires that all wheelchair accessible guestrooms be equipped with accessible communication features.

225 Self-Service Storage Facilities

This is a new requirement recommended by the advisory committee. ADAAG does not specifically address self-service storage facilities, and many ADAAG users questioned how access should be provided. Scoping as provided in Table 225.1 is 5% but drops to 2% after the first 200 spaces. Accessible storage spaces are required to be dispersed among the various classes of units provided to the extent the number of accessible spaces allows. Where a facility is comprised of multiple buildings, accessible spaces can be clustered in one building. This provision addresses concerns raised by the self-storage industry regarding the number of entrances required to be accessible in facilities that may have more than fifty entrances to separate spaces. The advisory committee believed these unique circumstances warranted specific attention.

226 Dining and Work Surfaces

Scoping for dining and work surfaces is consistent with ADAAG 4.1.3(18). This provision integrates requirements for dispersion and dining counters that derive from the section on restaurants and cafeterias in ADAAG 5.1 and 5.2, respectively. However, the revised guidelines apply the dispersion requirement generally to all dining and work surfaces, whereas ADAAG 5.1 requires dispersion only for restaurant and cafeteria seating.

227 Sales and Service Counters

This section corresponds to requirements for business and mercantile facilities in ADAAG 7. Section 227.2 provides scoping for check-out aisles that is consistent with ADAAG 7.3. This scoping however is not limited to business and mercantile occupancies and applies to all facilities with check-out aisles. It replaces a requirement in ADAAG 8.3 specific to check-out areas in libraries that requires at least one lane at check-out areas to comply. There is a substantive change to exceptions from the scoping requirement. ADAAG 7.3 permits only one check-out aisle to be accessible where selling space is less than 5000 square feet. It also permits one check-out aisle of each design to be accessible in alterations of facilities with more than 5000 square feet of selling space. This is required until the number of accessible check-out aisles of each design equals the number required in new construction. The advisory committee recommended retaining these exceptions. However, the Board has removed the exception for facilities with less than 5000 square feet of selling space because small facilities rarely have more than one check-out aisle. In fact, small facilities generally have point of sales and service counters in lieu of check-out aisles. The exception for alterations has been retained but has been made generally applicable and is not limited to facilities with more than 5000 square feet of selling space. Requirements for identification of accessible check-out aisles in 227.2.1 includes a clarification that, where all check-out aisles are accessible, such identification is not required.

Section 227.3 covers point of sales and service counters. This provision is consistent with ADAAG 7.2 except that no distinction is made between counters

with cash registers and those without, which the advisory committee considered insignificant.

Requirements for food service lines in ADAAG 5.5 have been integrated into the scoping provision in 227.4. A new provision for queues and waiting lines at 227.5 clarifies that an accessible route is to be maintained where a defined circulation route is provided. A requirement for an accessible route through security bollards in ADAAG 7.4 has been clarified and relocated to section 206.8. Section 206.8 clarifies that security may not obstruct ingress or egress.

228 Storage

Provisions for storage are consistent with those in ADAAG 4.1.3(12). Examples of the types of storage elements covered have been moved to an advisory note. A new provision is provided in 228.2 that requires at least 5% of lockers to be accessible. Requirements for self-service shelving in section 228.3 are consistent with ADAAG 4.1.3(12). The Board has removed a reference to display units because displays are not to be touched and therefore cannot be self-service. The requirement has been made generally applicable to all facilities types, not just mercantile occupancies, and effectively replaces requirements in ADAAG 8.5 specific to library stacks. A new provision is added for coat hooks and folding shelves in 228.4 to clarify, that where such elements are provided in toilet rooms or compartments, locker rooms, or dressing and fitting rooms, at least one of each type shall be accessible.

229 Depositories, Vending Machines, Change Machines, and Mail Boxes

This provision represents a change from ADAAG 5.8 which addresses vending machines and other equipment in restaurants and cafeterias. ADAAG provides only for clear floor space at such equipment. Consistent with the advisory committee's recommendation, requirements have been added for wheelchair turning space and the location of operable controls within accessible reach ranges in accordance with section 309 at vending machines. In addition, the Board has added a requirement that operable controls meet the operating characteristics specified. The Board also has added specific references to ''depositories, change machines, and mail boxes'' and an exception that exempts drive-up only depositories from compliance. In view of the coverage of residential and other commercial facilities, the Board has included a provision that 5% of mail boxes be accessible where provided in an interior location. In residential facilities where interior or exterior mail boxes are provided on site, access is required to mail boxes serving dwelling units that are required to be accessible. The Board does not intend that this provision address U.S. Postal Service mail boxes in the public right-of-way because these elements may be provided in communities without accessible routes.

230 Windows

The technical provisions for windows are reserved in ADAAG. Where glazed openings are provided for operation by the occupants of accessible spaces, the revised guidelines include a new provision which requires access to at least one glazed opening. In accessible rooms or spaces, access is also required to each glazed opening required by the administrative authority to be operable. The advisory committee and the Board reasoned that if windows are to be operable, they must be operable by all potential building occupants, including people with disabilities. Furthermore, new technology, including mechanical or electrical devices makes providing accessible windows possible.

Section 230 requires that the operable parts of windows be accessible, but it does not address the height of glazed openings. Requirements for toilet room mirrors specify that the bottom edge of the reflecting surface be no more than 40 inches from the floor (section 603.3), and provisions for automatic teller machines require display screens to be visible from a point 40 inches above the center of the clear floor space in front of the machine (section 707.5.4).

Question 16: Should a maximum sill height for the glazed area of those windows required to be accessible be specified in the final rule so that people who use wheelchairs, located on any floor, can look through the window to view ground level activities? If so, what should this height be? The Board also seeks information on any design requirements, practices, or considerations that would specify installation above an accessible height in certain occupancies for security or safety reasons, such as to guard against break-ins or to prevent improper use by building occupants, including children. Information is sought on any other design impacts, such as the use of the space or cavity below windows for mechanical or other building systems.

231 Two-Way Communication Systems

In amending ADAAG to cover State and local government facilities, the Board added a requirement that where a two-way communication system is provided to gain admittance to a judicial, legislative, or regulatory facility, audible and visual signals must be provided. Also included was a requirement that handsets have a cord at least 29 inches long. In the revised guidelines, the Board has made this requirement applicable to all types of facilities where such two-way communication systems are provided.

232 Judicial Facilities

This provision integrates scoping requirements for judicial facilities contained in ADAAG 11 without substantive change. Provisions in ADAAG 11 for legislative and regulatory facilities have been integrated into other scoping provisions of Chapter 2.

233 Detention and Correctional Facilities

This section covers scoping for detention and correctional facilities, including the minimum number of holding and housing cells required to be accessible. These provisions are based on ADAAG 12 and have been edited to be consistent with the format of the revised guidelines. In addition, several substantive changes have been made. ADAAG 12.4.5 reserves scoping for accessible holding or housing cells in alterations. In publishing final amendments for State and local government facilities, the Board acknowledged that prison operators commenting on the proposed amendments urged that access not be required in altered correctional facilities because some existing facilities would not be able to support inmates with disabilities even if cells were made accessible. These comments also pointed to difficulties in complying due to design constraints unique to correctional facilities. In response, the Board had reserved a proposed scoping requirement for altered cells, but noted that public entities, including correctional entities, have an obligation to provide program access, as required by the Department of Justice (DOJ) title II regulations. Further, the Board noted that the program access requirement may effectively determine the degree of access necessary in an alteration. In the revised guidelines, the reserved provision has been replaced with an exception at 233.2 which states that in the alteration of holding or housing cells or rooms accessibility is required ''to the extent determined by the Attorney General.'' DOJ's title II regulation states that public entities must operate each service, program, or activity so that the service, program, or activity, when

viewed in its entirety, is readily accessible to and usable by individuals with disabilities. DOJ may revise its title II regulation to provide more specific guidance as to the extent to which the requirements for accessible cells or rooms in detention and correctional facilities apply to alterations. A similar exception also is provided for special holding and housing cells or rooms in section 233.3.

Exceptions are provided at F223.2 and F233.3 for corresponding provisions for detention and correctional facilities covered by the ABA. These exceptions, however, refer to applicable agency regulations implementing section 504 of the Rehabilitation Act for determining the extent to which access is required in the alterations of cells or rooms in detention and correctional facilities. The lack of a specific requirement for alterations to cells or rooms does not excuse a Federal agency or a federally funded entity from providing access to all of a prison's programs and services, when viewed in their entirety, if required under applicable section 504 regulations.

In addition, two other changes have been made by the Board:

- guidance is provided on the number of beds required to be accessible within a room as specified for transient lodging facilities in Table 224.3; and
- scoping for accessible communication features in wheelchair accessible cells has been reduced from 100% to 50%, consistent with revised scoping for transient lodging facilities.

234 Accessible Residential Facilities

The Board has added new scoping requirements for accessible residential housing covered by the ADA. This section requires that at least 5% (but no less than one) of the total number of dwelling units be accessible. An additional 2% minimum of the dwelling units are required to be equipped with accessible communication features but are not required to be wheelchair accessible. Dispersion of accessible units is required among the various types of units provided so that people with disabilities have choices of dwelling units comparable to and integrated with those available to other residents.

Part II: ABA Application and Scoping

This part provides application and scoping requirements for facilities covered by the ABA. The Board develops and maintains minimum guidelines for buildings and facilities covered by the ABA [10]. These guidelines serve as the basis for standards issued by four standard-setting Federal agencies: the General Services Administration (GSA), the Department of Defense (DOD), the Department of Housing and Urban Development (HUD), and the U.S. Postal Service (USPS). Representatives of these agencies, as well as those of other departments, serve as Federal members of the Board. In this capacity, these agencies have coordinated closely with the Board in updating the ABA accessibility guidelines.

The Board has based the ABA scoping and application sections on the revised ADA scoping and application sections of Part I. This will ensure greater consistency between both scoping documents and will serve to establish greater uniformity in the level of access among facilities covered by the ADA or the ABA. The Board previously adopted a resolution introduced by GSA to ensure that the level of accessibility established for federally funded facilities in this rulemaking meets or exceeds that proposed for the private sector and State and local government sectors under the ADA. To this end, differences or departures from the ADA scoping and application sections have been minimized. Most changes are necessary due to differences between the ABA and ADA statutes and regulations issued under them. For example, the ABA covers facilities leased by Federal agencies and the guidelines for the ABA reflect this statutory difference. The guidelines for the ADA and ABA are being consolidated in one part of the Code of Federal Regulations (36 CFR Part 1191). The following discussion explains substantive differences from the application and scoping requirements for facilities covered by the ADA as discussed in Part I.

F103 Modifications and Waivers

The ABA recognizes a process under which covered entities may request a modification or waiver of the applicable standard. The standard-setting agencies may grant a modification or waiver upon a case-by-case determination that it is clearly necessary. This modification and waiver process is recognized in section F103 as a substitute to the provision for ''equivalent facilitation'' in section 103 provided for facilities subject to the ADA.

F106 Definitions

Several defined terms in section F106.5 differ from those in the ADA application section. These include ''dwelling unit'' and ''transient lodging'' which have been simplified and made mutually exclusive. Definitions for ''joint use'' and ''lease'' are included that pertain to provisions specific to the ABA covering leased facilities. Definitions of ''private building or facility'' and ''public building or facility'' are not included because these terms are used to distinguish between places of public accommodation and commercial facilities covered by title III of the ADA (private) and State and local government facilities covered by title II of the ADA (public).

F202 Existing Buildings and Facilities

F202.2 Additions

Section F202.2 addresses additions to existing facilities and provides specific criteria for accessible routes, entrances, and toilet and bathing facilities that derive from the current standard, UFAS. These provisions have been retained but are not provided in the ADA scoping document. Provisions in this section for public pay telephones and drinking fountains have been included for consistency with a requirement in the ADA scoping document for an accessible path of travel for certain additions (202.2).

F202.6 Leases

The ABA requires access to facilities leased by Federal agencies. Section F202.6 contains scoping requirements for facilities that are newly leased by the Federal government, including new leases for facilities previously occupied by the Federal government. The negotiation of a new lease occurs when (1) the Federal government leases a facility that it did not occupy previously; or (2) an existing term ends and a new lease is negotiated for continued occupancy. The unilateral exercise of an option which is included

[10] The ABA covers: (1) facilities constructed or altered by or on behalf of the United States; (2) facilities leased in whole or in part by the United States; (3) facilities financed in whole or in part by a grant or loan made by the United States, if such building or facility is subject to standards for design, construction, or alteration issued under authority of the law authorizing such grant or loan; and (4) facilities to be constructed under authority of the National Capital Transportation Act of 1965, or title III of the Washington Metropolitan Area Transit Regulation Compact. Notwithstanding the above, the ABA does not cover: a privately owned residential structure not leased by the Government for subsidized housing programs; or, any building or facility on a military installation designed and constructed primarily for use by military personnel without disabilities. The current ABA standard exempts various military facilities consistent with the statute (UFAS 4.1.4(2)); this exclusion has not been retained in the revised guidelines as it is more appropriately contained in the implementing regulations issued by the DOD and the other standard-setting agencies.

as one of the terms of a preexisting lease is not considered the negotiation of a new lease. Negotiations which do not result in a lease agreement are not covered by this section. Provisions in this section address joint-use areas, accessible routes, toilet and bathing facilities, parking, and other elements and spaces. Corresponding changes concerning coverage of leased facilities appear in the sections stating the purpose (F101) and the overall scope of the guidelines (F201.1).

F234 Housing

The proposed scoping provisions for dwelling units covered by the ABA are identical to those proposed for the ADA. However, UFAS 4.1.4(3) effectively allows the Department of Defense the option to modify units when the need arises as opposed to providing accessible units at the time of construction and to do so on an installation-by-installation basis. This flexibility allows the military departments to leave families without disabilities in accessible units and to modify units to suit the needs of families with disabilities.

Question 17: Should a similar exception be included in the revised guidelines that would permit accessible dwelling units under control of the Department of Defense to be designed to be readily and easily modifiable to be accessible provided that modifications are accomplished on a first priority basis when a requirement is identified? Also, should a similar exception be provided that permits provision of access on an installation-by-installation basis?

Other Differences from ADAAG

Certain provisions or exceptions in the ADA scoping section applicable only to the private sector (*i.e.*, places of public accommodation and commercial facilities) or recognized only by the ADA are not included in the ABA scoping section. These include:

- an exception that permits a limited level of access to work areas for approach, entry and exit and that does not otherwise require the area itself to be accessible (203.3);
- an exception from the requirement for an accessible route in private multi-level buildings and facilities that are less than three stories or that have less than 3,000 square feet per floor (206.2.3, Exception 1);
- TTY scoping provisions specific to private buildings (217.4.2.2 and 217.4.3.2); and
- an ADA exception from the requirement for accessible guest rooms for certain places of lodging that have five or fewer rooms for rent or hire (224.1, Exception).

Part III: Technical Requirements

Part III provides technical requirements (Chapters 3 through 11) that are referenced by the ADA and ABA application and scoping documents. These requirements are based on recommendations from the advisory committee unless otherwise noted. The following analysis describes substantive differences between the revised guidelines and ADAAG technical requirements.

Chapter 3: Building Blocks

Chapter 3 contains basic technical requirements considered to be the ''building blocks'' for accessibility as established by the guidelines. All sections of this chapter correspond to ADAAG requirements. They are referenced by scoping provisions in Chapter 2 and by the technical chapters (4 through 11).

302 Floor or Ground Surfaces

This section is substantively similar to ADAAG 4.5. Section 302.1 requires floor or ground surfaces to be ''stable, firm, and slip resistant'' as does ADAAG 4.5.1. ADAAG however provides scoping language in this requirement that has not been included in 302.1. Instead, other technical sections, such as those for walking surfaces (403), ramps (405), and stairways (504) reference this requirement. ADAAG also applies the requirement generally to ''accessible rooms and spaces,'' a requirement that has not been retained in the revised guidelines because nearly all rooms and spaces must be accessible.

Section 302.2 which addresses carpet is consistent with ADAAG 4.5.3. Section 302.3 covers openings and derives from ADAAG 4.5.4. This requirement has been revised to cover ''openings'' instead of ''gratings'' in order to cover all types of openings in a floor or ground surface that would be an impediment to mobility in addition to gratings, such as expansion joints and spaced wood decking. Clarification is also provided that this requirement does not apply to elevators or wheelchair lifts where an opening between the car and the floor level is necessary to operate the elevator.

303 Changes in Level

This section is the same as ADAAG 4.5.2 except for editorial changes.

304 Wheelchair Turning Space

Consistent with ADAAG 4.2.3, this section recognizes circular and T-shaped turning space and provides textual description of the size and dimensions for each contained in ADAAG Figure 3. Unlike ADAAG, this section clarifies that elements with knee and toe clearance can overlap turning space. It explains the extent to which overlap is permitted, limiting it to one segment of the T-shaped space. The overlap of circular turning space is not specifically limited although the maximum depth for knee and toe space has been increased from 19 to 25 inches as indicated in section 306. Additionally, clarification is provided that, in general, doors can swing into the turning space but that changes in level or slopes greater than 1:48 are not permitted within the space.

305 Clear Floor or Ground Space

This section is consistent with ADAAG 4.2.4 and provides clarification that changes in level and slopes greater than 1:48 are not permitted within the clear floor or ground space.

306 Knee and Toe Clearance

The revised guidelines provide specifications for knee and toe clearances as a basic ''building block.'' The specifications correspond to knee and toe clearances provided in ADAAG specifically for plumbed fixtures, including drinking fountains (4.15) and lavatories (4.19). The new format recognizes these clearances for other elements as well, such as tables and counters. There are two substantive changes. The maximum depth for the knee and toe space specified in 306.2.2 and 306.3.2 has been increased from 19 to 25 inches. The advisory committee recommended this change for consistency with an ADAAG specification in Figure 5(b) for obstructed reaches which recognizes a 25 inch maximum depth. The other change concerns removal of the ADAAG specification of a 29 inch minimum apron clearance at lavatories, which the advisory committee considered ineffective without a minimum depth. Further detail has been added about the clearance between the knee and toe space; this clearance is permitted to be reduced at a rate of 1 inch for each 6 inches in height. The advisory committee's intent was to describe in text the sloping profile of the space between knees and toes in ADAAG Figures 27(a) and 31.

307 Protruding Objects

This section is substantively consistent with ADAAG 4.4 except for the addition of three exceptions. An exception to the requirement for protrusion limits in 307.2 permits handrails serving stairs and ramps to

protrude 4½ inches maximum from wall surfaces. This was recommended by the advisory committee to prevent conflict with model code requirements. An exception to the requirement for post-mounted objects in 307.3 exempts the sloping portions of ramp or stair handrails. The Board has added an exception to the requirement for vertical clearances in 307.4 that permits door closers and door stops to encroach up to 2 inches into the 80 inch minimum clearance. This exception clarifies a common question concerning standard size doors. This section uses the terms ''wall'' and ''post'' to provide a reference point for measuring protrusions. The terms are to be liberally construed. For example, a partition or a column is understood to provide a wall surface.

308 Reach Ranges

This section is consistent with forward and side reach range requirements in ADAAG 4.2.5 and 4.2.6, including obstructed reaches. Forward reach ranges are 48 inches maximum and 15 inches minimum; side reach ranges are 54 inches maximum and 9 inches minimum. The advisory committee recommended that the side reach range, including obstructed reaches, be changed to those required for forward reaches. This recommendation was based on a report from the Little People of America which considered the 54 inch height beyond the reach for many people of short stature. The advisory committee also considered the 48 inch maximum for side reaches as preferable for people who use wheelchairs.

The Board has not included this recommended change in the proposed rule because it believes a change to this long-standing provision requires further research. The reach range specifications apply to a wide variety of controls and elements, from gasoline dispensers to ATMs to information kiosks to off-street parking meters and self service parking payment and ticket machines. The Board believes information on the impact of the recommended change on these and other types of elements should be developed before proposing any reduction in the maximum side reach height. However, the most recent draft of the ICC/ANSI A117.1–1998 does lower the high side reach to 48 inches, therefore, new codes based on this standard will be more stringent in this regard. The experience of the building industry and people with disabilities will provide an invaluable resource in subsequent revisions of ADAAG.

309 Operable Parts

Requirements for operable parts are consistent with those for controls and operating mechanisms in ADAAG 4.27.

Section 309.4 specifies that operable parts not require more than 5 pounds of force for operation. This long-standing specification appears sufficient for controls operated by the hand, such as door hardware, faucets, and push plates. However, anecdotal information indicates that a 5 pound maximum is too high for controls activated by a single finger, such as elevator call and control panel buttons, platform lift controls, telephone key pads, function keys for ATMs and fare machines, and controls for emergency communication equipment in areas of refuge, among others. Usability of such controls also may be affected by how far the button or key must be depressed (*i.e.*, the stroke depth) for activation. Information indicates that most control buttons of keys can meet a 3.5 maximum pounds of force and a maximum stroke depth of 1/10 inches. The Board is considering including these specifications in the final rule based on responses to the following questions.

Question 18: Comment is sought on whether a maximum 3.5 pounds of force and a maximum 1/10 inch stroke depth provide sufficient accessibility for the use of operable parts activated by a single finger.

Question 19: The Board seeks information on any types of operable parts covered by the revised guidelines that cannot meet, or would be adversely affected by, a maximum 3.5 pounds activation force and maximum 1/10 inch stroke depth.

Chapter 4: Accessible Routes and Accessible Means of Egress

In the revised guidelines, all components of accessible routes and means of egress have been combined into one chapter, including walking surfaces, doors, ramps, elevators, wheelchair lifts, and areas of refuge. Section 402 indicates that accessible routes consist of these components.

403 Walking Surfaces

''Walking Surfaces'' is a new term that has been introduced to refer to the portion of interior or exterior accessible routes existing between doors and doorways, ramps, elevators, or lifts. The requirements for walking surfaces derive from specifications for accessible routes in ADAAG 4.3 and are substantively the same in addressing floor or ground surfaces, slope, changes in level, clear width (including for turns around objects), wheelchair passing space, and protruding objects. There are three changes from technical requirements in ADAAG:

- the maximum cross slope has been changed from 1:50 to 1:48 throughout the revised guidelines for consistency with model building codes (403.3);
- a new specification has been added that requires a minimum linear separation of 48 inches between permitted reductions in the 36 inch minimum clear width (403.5); and
- for turns around objects, clarification has been added that, where a 60 inch minimum width at a turn is provided, the clear width of the connecting route can be 36 inches minimum instead of 42 inches minimum because 60 inches permits 360 degree maneuvering (403.5.1).

Question 20: The revised guidelines, like the current ADAAG, provide technical criteria for handrails along stairs and ramps. Section 505 of the revised guidelines provide requirements for continuity, height, clearance, gripping surface, cross section, fittings, and extensions. Handrails provided at other locations, such as along corridors in medical care facilities and airports, are not subject to these criteria except at stairs and ramps. The Board seeks comment on whether handrails, where provided along circulation paths without a slope or steps, should be subject to the technical requirements in 505. Such a requirement may be included in the final rule.

404 Doors and Doorways

This section provides requirements for doors and doorways which correspond to those in ADAAG 4.13. Requirements for entrances in ADAAG 4.14, which are basically scoping in nature, have been relocated to Chapter 2 as part of scoping provisions for accessible routes (206.4).

Like ADAAG, requirements are provided for manual doors (404.2) and automatic doors (404.3). The Board has provided an exception in 404.2 for manual doors, doorways, and gates operated only by security personnel under which compliance with requirements for door hardware, closing speed, and door opening forces is not required. This exception is based on one provided in ADAAG for judicial facilities and detention and correctional facilities. For consistency, the Board has made this exception generally applicable to all facilities. Security personnel must have sole control of doors that are eligible for this exception. It would not be acceptable for security personnel to operate the doors for people with disabilities while others have independent access. A similar

exception is provided for automatic doors in 404.3.

Section 404.2.3 addresses clear width and is different from ADAAG in several respects. An exception in ADAAG 4.13.5 that allows a 20 inch minimum clearance at doors not requiring full user passage has been removed because such doors are not part of an accessible route. Clarification has been provided on the protrusion of door hardware into the clear width. ADAAG indicates that the clear width is to be measured to the face of the door. However, the clear width requirement has been misinterpreted as prohibiting certain door hardware, such as panic bars, from protruding into this clearance. Language has been added which prohibits projections into the minimum clear width at heights below 34 inches; above this height (up to 80 inches), projections of 4 inches maximum are allowed. The Board has also editorially revised an exception that allows the latch side stop to protrude up to ⅝ inch in alterations (404.2.3 Exception). In ADAAG, this exception is limited to cases of ''technical infeasibility.'' The Board has removed this qualification in this and other exceptions for alterations as noted in section 202 above.

Section 404.2.4 specifies door maneuvering clearances which are consistent with ADAAG 4.13.6. However, ADAAG provides these specifications through illustration (Figure 25) and the revised guidelines, which provide all requirements in written text, use tables to provide this information (Tables 404.2.4.1 and 4042.4.2). Clarification is also provided for recessed doors. ADAAG Figure 25 requires that doors in alcoves provide clearance for a forward approach. This provision has led to questions about what constitutes an ''alcove.'' In 404.2.4.3, this requirement has been changed to apply specifically to ''recessed doors where the plane of the doorway is offset more than 8 inches from any obstruction within 18 inches measured laterally on the latch side of the door.''

Section 404.2.5 covers thresholds. A provision in ADAAG 413.8 that allows thresholds ¾ inch high maximum at exterior sliding doors has been removed because products are available that meet the ½ inch high maximum specified for all other doors. An exception that permits in alterations a ¾ inch maximum threshold if beveled on both sides has been retained.

In section 404.2.7, which covers door hardware, a minimum mounting height for door hardware (34 inches) has been added. This height corresponds with revisions to the required clear width at doors to clarify that limited projections into the clear width are acceptable above this height. The maximum height (48 inches) is consistent with ADAAG 4.13.9. The advisory committee also recommended an exception that would permit any location for locks used only for security purposes and not for normal operation. This would address certain doors that typically have locks located outside the specified reach range, such as doors without stiles that lock at the bottom edge. The Board has included an exception but has further refined its application to ''existing locks at existing glazed doors without stiles, existing overhead rolling doors or grilles, and similar existing doors or grilles that are designed with locks that are activated only at the top or bottom rail.'' The Board has limited this exception to existing doors or grilles because design solutions for accessible doors and gates are available in new construction.

Closing speed is addressed by section 404.2.8 and corresponds to ADAAG 4.13.10. The required minimum closing speed for door closers is generally consistent with ADAAG, although the values differ due to changes in the measuring points. This revision was recommended by the advisory committee for consistency with the ICC/ANSI A117.1 standard. This section also includes a new provision for spring hinges, which offer little opening resistance and closing forces in the 1 to 2 pounds of force range. The requirement specifies that such hinges be adjusted so as to close from an open position of 70 degrees no faster than 1.5 seconds.

Two new provisions are provided for door surfaces and vision lites. Section 404.2.10 requires that swing doors have a smooth surface on the push side that extends the full width of the door. This provision derives from the ANSI A117.1–1992 standard and is intended to permit wheelchair footrests to be used in pushing open doors without risking entrapment on the stile. Exceptions to this requirement are provided for certain types of doors, such as tempered glass doors without stiles. Section 404.2.11 requires that, where vision panels in or adjacent to doors are provided, the bottom of at least one glazed panel be no higher than 43 inches from the floor for access to people using wheelchairs or who are of short stature. This height permits hardware to remain at industry standard locations. The Board has added an exception for vision lites that are more than 66 inches from the floor or ground, measured to the lowest part.

Section 404.3 addresses automatic doors. As in ADAAG 4.13.12, full-powered, low-energy, and power-assisted doors are addressed, and the industry standards (ANSI/BHMA 156.10 and 156.19) are referenced. The revised guidelines, as indicated in section 105.2, reference the most recent version of these standards (1996). Requirements in ADAAG 4.13.12 for door opening speed and forces have been removed since they are addressed by the referenced standards. Other differences from ADAAG include:

- clarification that the required 32 inch minimum clear opening applies to both power-on and power-failure modes and that the clear width for automatic doors is based on the clear opening provided by all leafs when simultaneously in the open position (404.3.1);
- addition of a requirement that maneuvering clearances specified for swing doors be provided at power-assisted doors since such doors are manually operated (404.3.2);
- addition of a requirement that labels and warning signs for automatic doors meet requirements in section 703.4 for non-tactile signage (404.3.6); and
- addition of a requirement by the Board that the clear break out opening for swinging or sliding automatic doors be at least 32 inches in emergency mode so that an accessible route through them is maintained in emergencies (404.3.7).

405 Ramps

Requirements for ramps are based on those in ADAAG 4.8. Differences from ADAAG concern:

- removal of the requirement that ''the least possible [running] slope'' be used for any ramp, which is considered too vague from a compliance standpoint (the 1:12 maximum slope has been retained) (405.2);
- the maximum cross slope has been changed from 1:50 to 1:48 for consistency with model building codes (405.3);
- clarification is provided that changes in level other than the running and cross slopes are not permitted on ramp runs (405.4);
- clarification is added that the required clear width (36 inches minimum) is measured between the leading edge of handrails (405.5);
- clarification is provided that ramp landings cannot slope more than 1:48 or have any other change in level (405.7.1) and that ramp landings and door maneuvering clearances can overlap (405.7.5); and
- revision of the requirement for handrails so that it applies to any ramp with a rise greater than 6 inches but not to those with a horizontal projection

greater than 72 inches since it can discourage shallower slopes on short ramps (405.8).

In addition, further specification is provided for edge protection in section 405.9. This section is clearer than ADAAG 4.8.7 in recognizing surface extensions beyond handrails (12 inches minimum) and in recognizing guards, curbs, or barriers that prevent passage of a 4 inch diameter sphere at the ground or floor surface. Exceptions are provided to clarify that edge protection is not required on curb ramps with flared sides or returned curbs, at stair or ramp openings at landings, or at landings that have a maximum ½ inch drop-off within 10 inches horizontally of the minimum landing area.

406 Curb Ramps

Requirements for curb ramps in the revised guidelines are consistent with those in ADAAG 4.7. Revisions made to requirements for ramps, such as the clarification that changes in level other than the running and cross slope are prohibited, apply to curb ramps as well. ADAAG originally contained a requirement in 4.7.7 that curb ramp surfaces have a raised distinctive pattern of truncated domes to serve as a warning detectable by cane or underfoot to alert people with vision impairments of the transition to vehicular ways. This warning was required for curb ramps in the belief that their sloped surfaces removed the tactile cue provided by the straight drop off of a curb. In response to concerns about the specification, which was based on research, the availability of complying products, proper maintenance such as snow and ice removal, usefulness, and safety concerns, the Board suspended this requirement jointly with the departments of Justice and Transportation in July 1994. This action suspended the requirements for detectable warnings at curb ramps, hazardous vehicular areas, and reflecting pools until July 26, 1996, pending the results of a research project on the need for detectable warnings at these locations and at vehicular-pedestrian intersections in the public right-of-way.

The research project showed that vehicular-pedestrian intersections are very complex environments and that pedestrians who are blind or visually impaired use a combination of cues to detect intersections. The research project found that detectable warnings helped some pedestrians who are blind or visually impaired locate and identify curb ramps. However, the detectable warnings had only a modest impact on overall performance because, in their absence, pedestrians who are blind or visually impaired used other cues that might be available to detect the intersection. The research project indicated that there may be a need for additional cues at some types of intersections. The research project did not identify the specific conditions where such cues should be provided. The research project suggested that other technologies, which may be less costly and equally or more effective than detectable warnings, be explored for providing information about intersections.

In 1996, the Access Board and the departments of Justice and Transportation extended the suspension of the detectable warning requirements to July 26, 1998, to allow the Board's ADAAG Review Advisory Committee to conduct its review of ADAAG and to make recommendations for revising and updating the document. The suspension has been extended to July 26, 2001. The advisory committee recommended that the requirement for detectable warnings at platform edges in transportation facilities be retained. The advisory committee also made specific recommendations for permitting equivalent tactile surfaces, and technology or other means to provide equivalent detectability of the platform edge as an alternative to the truncated dome surface (see discussion at section 705). The advisory committee did not make any recommendations regarding the provision of detectable warnings at other locations within a site. The advisory committee suggested that the appropriateness of providing detectable warnings at vehicular-pedestrian intersections in the public right-of-way should be established first, and the application to other locations within a site should be considered afterwards. The Board has not included a requirement for detectable warnings within a site (*i.e.*, at hazardous vehicular areas or reflecting pools) or at curb ramps.

Section 406.7 addresses curb ramps provided at pedestrian islands which is consistent with ADAAG 4.7.11 and requires clear floor space at the top of ramps. The Board has added further detail on the width and location of this space relative to the curb ramp. A requirement in ADAAG 4.7.8 that curb ramps be located or protected so as not to be obstructed by parked vehicles has been removed because it is not always possible to prevent such obstruction solely through curb ramp design; operational factors, such as local traffic laws and their enforcement are also a key factor.

407 Elevators

Requirements for passenger elevators in ADAAG 4.10 are updated in section 407. Elevators must meet the industry safety code, ASME/ANSI A17.1, according to the most recent version (1993 with 1994 and 1995 addenda) as indicated in section 105.2. In addition to the types of passenger elevators recognized by ADAAG, the revised guidelines provide technical criteria for two new types of elevators destination-oriented elevators in 407.3 and limited-use/ limited-application (LULA) elevators in 407.4. A new subsection, 407.5, is also provided for existing elevators that are altered.

Section 407.2 covers passenger elevators currently addressed by ADAAG. A reference in ADAAG 4.10.1 to ''combination passenger and freight elevators'' has been removed because the type of elevator this was intended to cover is generally considered a ''passenger elevator'' by the ASME Elevator Safety Code, which does not address ''combination'' elevators.

A change is made to specifications for car size in section 407.2.8. ADAAG 4.10.9 recognizes two standard car configurations based on early industry conventions and provides a general performance standard requiring that users be able to enter the car, maneuver within reach of the controls, and exit from the car. The advisory committee considered these specifications too restrictive since they did not specify other standard configurations, such as the elongated hospital-type car, that are considered to meet the general performance standard. In Table 407.2.8, a greater variety of inner car dimensions are permitted. In addition to those specified by ADAAG, this table also permits cars with minimum inner dimensions of 54 by 80 inches and 60 by 60 inches. Other configurations that provide specified wheelchair turning space wholly within the car are also allowed. With respect to the clear width of the door opening, recognition of a ⅝ inch tolerance is provided to accommodate common industry sizes using ''hard'' metric equipment sizes.

Other revisions for standard elevators include:

- changing the height of call buttons from 42 inches ''centered'' to a range between 35 to 48 inches measured to each button centerline (407.2.2);
- adding requirements for the frequency (1500 Hz maximum) and decibel ranges (20 to 80 dBA) for hall call buttons (407.2.3) (while the advisory committee recommended that this be measured at the annunciator, the

Board is requiring measurement at the call button, closer to the user);

• specifying that the minimum size of visible hall signals be measured ''along the vertical centerline of the element,'' a Board change that takes into account triangular signals (407.2.3.2.2);

• revising requirements for tactile signs at hoistway entrances by specifying that the 60 inch height is measured to the baseline of the character (instead for the centerline) for consistency with other tactile signage requirements (407.2.4);

• adding a requirement that a tactile star be provided at the main entry level hoistway entrance, and removing language regarding the use of applied plates since it was considered advisory (407.2.4);

• adding requirements for car controls so that numbers are provided in ascending order and, in the case of multiple columns, read left to right (407.2.11.1);

• recognizing the use of keypads as an option to control panels (which provides an option in situations where it would be difficult to locate all buttons of a control panel within the specified reach range) and requiring that they follow the standard telephone keypad arrangement and have tactile characters (407.2.11.2);

• providing a maximum decibel level (80 dBA) for audible car position indicators (407.2.12.2);

• requiring car position indicators to provide automatic verbal announcements because of the ready availability of such indicators, and allowing audible signals only in slow-moving elevators having a maximum rated speed of 200 feet per minute (407.2.12.2); and

• requiring that ''essential'' information be presented in both tactile and visual form where instructions for the use of emergency communication equipment are provided (407.2.13).

Question 21: The Board is considering requiring a frequency band width of 300 to 3000 Hz for hall signals (407.3.2) in the final rule and seeks comment on such a requirement as it would affect intelligibility for people who are hard of hearing and others. Information on the availability of products and costs of such a requirement is requested.

Question 22: Section 407.2.13 addresses two-way emergency communication systems and requires that emergency signaling devices not be limited to voice communication. The Board seeks information and product literature on emergency communication devices and communication technologies that provide two-way communication in a manner accessible to people who are deaf and others who cannot use voice communication. The Board will consider adding a requirement for more interactive emergency communication devices that provide such access if they are presently available and if the costs and benefits can be demonstrated.

The advisory committee also recommended lowering the maximum height for control buttons from 54 to 48 inches, consistent with its recommendations for reach ranges generally. This recommendation is based on a report from the Little People of America indicating that a 54 inch height is too high for most people of short stature. As discussed at section 308 above, the Board has not included this requirement. The advisory committee recognized a potential adverse impact of a lower maximum height on elevators with panels that must have a large number of buttons in a limited amount of space and recommended an exception that would allow the 54 inch maximum height for elevators with more than 16 stops.

Section 407.3 provides technical requirements for destination-oriented elevators. These elevators are different from standard elevators in that passengers indicate their floor destination, typically using a keypad, when calling an elevator. The responding car is programmed by the time of arrival to the destination. This system allows more efficient utilization of elevators by reducing the number of stops per trip. The revised guidelines require that these elevators comply with the ASME/ANSI A17.1 safety standard and with most of the requirements for standard elevators in 407.2. Different specifications are provided for call buttons, hall signals, car controls, car position indicators, and hoistway entrance designations. Provisions specific to destination elevators require:

• keypads, where provided instead of call buttons, to have a standard phone keypad arrangement (407.3.1);

• different visible and audible car arrival signals for each car in a bank which correspond to those signals given when registering a call so users know which car is responding to their call (407.3.2);

• location of car controls, which typically include only emergency controls, within 35 to 48 inches from the floor (since fewer buttons are provided, the Board has retained the 48 inch maximum instead of the 54 inch maximum specified for other elevators) (407.3.3);

• visual display of each floor at which a car has been programmed to stop, and automatic verbal announcement of each floor the car stops at (407.3.4); and

• tactile identification of each car at the hoistway entrance so persons with vision impairments can identify the car responding to their call (407.3.5).

The revised guidelines also provide technical requirements for LULA elevators. This type of elevator is typically smaller and slower than other passenger elevators and is used for low-traffic, low-rise installations, including residential facilities. The advisory committee recommended that this type of elevator be allowed where a standard elevator is not required. Since this kind of elevator requires less space and costs less, the advisory committee reasoned that LULAs will provide a more viable option in providing vertical access in multi-story buildings not required to have an elevator. The technical requirements for these elevators are provided in section 407.4.

Where provided, LULAs would be required to comply with the applicable section of the safety code, ASME/ANSI A17.1, Chapter XXV. Most of the requirements are the same as those for other elevators except that LULAs are not subject to criteria for door timing, door delay, or car position indicators. Provisions that differ from those for other elevators concern doors, car size, and car controls. Low-energy power-operated swing doors are permitted as an alternative to sliding doors if they meet the ANSI/BHMA A156.19 standard and requirements in section 404 of this guideline. They are required to remain open for at least 20 seconds when activated. Sliding doors are subject to door operation requirements of other elevators. A smaller car size is permitted: 42 inches wide minimum and 54 inches deep minimum (with a 36 inch minimum width allowed for installations in existing facilities). Doors are required to be provided on the short dimension. While considerably smaller than other elevators, these dimensions are intended to approximate the maximum car size possible for this type of elevator. Car controls are subject to the same requirements as other elevators except that they must be installed on the side wall.

The revised guidelines provide more detail than ADAAG on the requirements for existing elevators that are altered. Section 407.5 provides requirements for other elevators that are altered if full compliance with 407.2 is not undertaken. Such elevators are subject to most of the requirements for new construction, but a variety of allowances are included in 407.5 to recognize the potential difficulty of bringing existing equipment into full compliance. In

section 407.5.4, smaller cars are permitted if they are at least 36 inches wide and 54 inches deep with a clear floor area of at least 16 square feet. The advisory committee recommended that a 48 inch minimum depth be permitted, but the Board considers the 54 inch minimum depth more appropriate in accommodating a wider range of mobility aids, including scooters with a long wheel base. This specification replaces provisions in ADAAG 4.1.6(3)(c) permitting smaller sized cars. This section also:

- does not require call buttons to be raised or flush, unless new buttons are installed (407.5.1);
- does not require existing hall signals to meet new construction requirements for frequency (1500 Hz maximum) or decibel levels (20 to 80 dBA), unless new signals are installed (407.5.2);
- allows existing hoistway swing doors that are manually operated or automatic if they provide a 32 inch minimum clear width and have a maximum 5 pounds opening force, but requires that power-operated car doors not begin to close until the hoistway door is closed (407.5.3);
- removes an exception in ADAAG 4.16(3)(c) that allows existing safety door edges instead of automatic door reopening devices which the advisory committee considered of little benefit (407.5.3);
- allows existing control panels not to comply where a fully-compliant panel is provided (407.5.5.4);
- allows car control buttons to be recessed and provides flexibility in the location of tactile markings at existing control panels but requires that new panels fully comply (407.5.5);
- allows existing car position indicators not to comply (407.5.6); and
- requires that accessible elevators be identified by the International Symbol of Accessibility unless all elevators in a building are accessible.

408 Wheelchair (Platform) Lifts

Requirements for wheelchair lifts are consistent with those in ADAAG 4.11 in specifying ground and floor surfaces, clear floor space, and operable parts. Like ADAAG, the revised guidelines require compliance with the safety code for elevators and escalators, ASME/ANSI A17.1, but references the most recent edition as indicated in section 105.2. The final rule will reference the ASME/ANSI A18.1 Safety Standard for Platform Lifts and Stairway Chairlifts if the new standard is published prior to the publication of the final rule. The revised guidelines provide additional specifications for lift doors and gates in section 408.2 that are not contained in ADAAG. These additional specifications are designed to facilitate unassisted entry and exit. Wheelchair lifts with doors or gates on opposing sides generally facilitate lift use by permitting a forward approach to both entry and exit doors or gates. The revised guidelines require lifts that do not provide this ''pass through'' to have low energy, power-operated doors or gates that meet the applicable requirements of the ANSI/BHMA A156.19 standard. As with LULA elevators, doors or gates are required to remain open for at least 20 seconds when activated.

409 Accessible Means of Egress

The advisory committee recommended revising the criteria for accessible means of egress to make them more consistent with model building codes and standards. These changes serve to provide more detail on the acceptable components of accessible means of egress. Section 409.1 recognizes that an accessible route complying with section 402 can be used as an accessible means of egress, except for wheelchair lifts, which are not permitted as part of accessible means of egress because they are not generally provided with standby power that would allow them to remain functional in emergencies when power is lost. New requirements are provided for the use of exit stairways and elevators that are part of an accessible means of egress when provided in conjunction with horizontal exits or areas of refuge meeting section 410. A horizontal exit is a fire-safety concept included in model building codes that in effect creates an area of refuge. For example, a story is divided into areas separated by a fire resistive wall. The fire door in the wall is the horizontal exit and, in the event of a fire, occupants can move away from the fire into the area that would be protected by the fire resistive wall (model code requirements are based on the assumption that fire will not occur in both areas simultaneously).

Under section 409.2, exit stairways can serve as part of an accessible means of egress if they contain an area of refuge or if they can be accessed from either an area of refuge or a horizontal exit. Such stairways must also meet the requirements for stairways in section 504 and, as required by ADAAG, have a minimum clear width of 48 inches between handrails. The requirements for exit stairways are not applicable to facilities not required to have areas of refuge (*i.e.*, those protected throughout by a supervised automatic sprinkler system and open parking garages) or to exit stairways that serve a single guest room. Exit stairways accessed from a horizontal exit are not required to provide the minimum 48 inch clear width.

While typical elevators are not designed to be used during emergency evacuation, there are elevators that are designed with standby power and other features according to the elevator safety standard that can be used for evacuation. The revised guidelines require such elevators as part of an accessible means of egress in buildings where accessible floors are four or more stories above or below the level of exit discharge (section 207.2). This is consistent with model codes. Section 409.3 provides the technical criteria for these elevators and requires standby power so that emergency or other authorized personnel can use the elevator for evacuation after the loss of primary electrical power. These elevators must meet requirements for emergency operation and signaling devices in the elevator safety code (ASME/ANSI A17.1, Rule 211). These elevators must be accessed from a complying area of refuge or a horizontal access except in facilities equipped throughout with a supervised automatic sprinkler system or open parking garages, which are exempt from the requirement for areas of refuge.

410 Areas of Refuge

The revised guidelines use the term ''areas of refuge'' instead of ''areas of rescue assistance'' and provides technical requirements that would replace those in ADAAG 4.3.11. The revised guidelines introduce some new requirements for areas of refuge and differ from ADAAG in not listing each type of space that can serve as an area of refuge. Requirements for location (410.2), construction (410.4), and smoke resistance (410.5) replace the space-specific criteria in ADAAG 4.3.11.1. Section 410.2 introduces a maximum travel distance to an area of refuge that is based on the travel distance permitted for the occupancy by the administrative authority. This section also clarifies that each area of refuge must have direct access to an exit stairway or evacuation elevator.

Under section 410.4, smoke barriers separating areas of refuge from the rest of the floor must have a minimum one-hour fire-resistance rating, and doors in the smoke barrier must have a minimum 20 minute fire-resistance rating. These requirements and others pertaining to doors and openings, including those for heating, ventilation, and air conditioning (HVAC) coincide with those in ADAAG as specified for areas of rescue assistance based on their

location. Section 410.5 is more direct than ADAAG in requiring all areas of refuge to be designed to prevent the intrusion of smoke. This requirement does not apply to facilities protected throughout (including areas of refuge provided although not required) by a supervised automatic sprinkler system. Consistent with ADAAG, and the model codes, special design requirements dealing with intrusion of smoke is not required for areas of refuge located in exit stair enclosures. A story-level landing within a fire resistance rated exit enclosure will provide a satisfactory area for staging evacuation assistance. Section 410.5 also specifies that where an elevator lobby serves as an area of refuge, the hoistway and lobby must comply with requirements for smoke-proof enclosures (unless the elevators are in an area of refuge formed by a horizontal exit or smoke barrier). This is consistent with ADAAG, but the revised guidelines recognize the use of horizontal exits or smoke barriers in this situation. Also, requirements in ADAAG 4.1.3.1(7) for activation, fire ratings, and pressure differentials where elevator lobbies serve as areas of refuge have not been included in the revised guidelines because they are extensively addressed by contemporary building codes.

Requirements for size (410.3), communication system (410.6), instructions (410.7), and identification (410.8) are consistent with ADAAG. Section 410.7 provides greater detail on the type of instructions required in areas of refuge. Instructions must include directions to other means of egress, urging people to use exit stairs if they can, information on evacuation assistance and how to summon it, and directions for using the required two-way communication system.

Question 23: Section 410.6 requires that emergency communication systems have visible signals in addition to audible signals so that limited communication access is provided for people who are deaf or hard of hearing. Use of two-way communication systems is recognized but not required. As with elevator communication systems, the Board seeks information and product literature on emergency communication devices and communication technologies that provide two-way communication in a manner accessible to people who are deaf and others who cannot use voice communication. The Board will consider adding a requirement for more interactive emergency communication devices that provide such access if they are presently available and if the costs and benefits can be demonstrated.

Chapter 5: General Site and Building Elements

Chapter 5 contains requirements for accessible parking and passenger loading zones, stairways, and handrails.

502 Parking Spaces

This section is substantively consistent with ADAAG 4.6, except for changes concerning identification of van spaces and accessible routes. Requirements in 502.6 for the identification of spaces have been revised by adding a specific mounting height (60 inches above the ground measured to the bottom edge of the sign); ADAAG 4.6.4 requires signs to be located so that they are not ''obscured by a vehicle parking in the space.'' In addition, the requirement that van spaces be designated as ''Van-accessible'' has been removed. The advisory committee recommended this action because this designation has been misinterpreted as reserving spaces solely for van users when in fact it was intended only to identify those spaces better suited for van use. A requirement in ADAAG that parked vehicle overhangs not reduce the clear width of connecting accessible routes has been removed as it is redundant with the requirement for clear width.

Other revisions have been made in sections 502.3 and 502.4 to clarify that:

- access aisles are to be marked;
- changes in level beyond the maximum 1:48 slope are not permitted for either the space or the access aisle; and
- the access aisle must be at the same level as the parking space.

Requirements for the location of accessible parking in ADAAG 4.6.2 have been relocated to Chapter 2 at 208.4 since these provisions contain scoping information.

503 Passenger Loading Zones

Requirements for passenger loading zones are based on those contained in ADAAG 4.6.6. Unlike the scoping provisions in 209, the technical criteria of this section have not been significantly changed. Requirements have been added in section 503.3 and 503.4 to clarify that:

- access aisles are to be marked;
- changes in level beyond the maximum 1:48 slope are not permitted for either the space or the access aisle; and
- the access aisle must be at the same level as the parking space.

504 Stairways

Two new provisions have been added to the requirements for stairs contained in ADAAG 4.9. In section 504.2, a riser height of 4 to 7 inches is specified, consistent with some model codes and the ICC/ANSI A117.1 standard. ADAAG requires a uniform riser height but does not specify a dimension. Section 504.4 permits an allowable slope up to 1:48 for tread surfaces to allow for drainage and prohibits changes in level on treads. ADAAG does not address tread slope.

505 Handrails

Requirements for handrails at ramps and stairs in ADAAG 4.9.4, 4.8.5, and 4.26 have been combined into one subsection in the revised guidelines. An exception in 505.2 from the requirement for handrails on both sides of aisle ramps has been expanded to include aisle stairs since the revised scoping for stairs is likely to cover stairs not covered by ADAAG. However, this exception has been limited to one handrail, whereas ADAAG currently exempts both handrails.

In sections 505.3 and 505.4, revisions have been made to clarify that handrails are not required to be continuous at aisle seating and that the handrail height is to be consistent along a stairway or ramp. In section 505.5, the 1½ inch knuckle clearance in ADAAG has been changed from an absolute to a minimum dimension. The advisory committee recommended this change because an absolute or maximum clearance is intended to prevent entrapment; this rationale was considered more pertinent to grab bars than to handrails. Also, some building codes require a clearance greater than 1½ inches. Another difference concerns specifications for gripping surfaces in section 505.6. The revised guidelines specify what is considered a ''continuous'' gripping surface by defining allowable interruptions by handrail brackets or balusters. Under this provision, surface interruptions are not considered obstructions if they obstruct no more than 20% of the handrail length; have horizontal projections beyond the sides of the handrail at least 2½ inches below the bottom of the handrail; and edges have a ⅛ inch minimum radius.

Many questions have arisen about the ADAAG specification in 4.26.2 for handrail diameter of 1¼ to 1½ inches (indicated in Figure 39 as the outside diameter) particularly in the use of pipe. Section 505.7 changes this range to 1¼ to 2 inches and clarifies its application to the outside diameter. The advisory committee pointed to studies that show a larger cross-section is more graspable and allows a stronger grip. This section also provides more specific guidance on acceptable alternatives to the specified circular cross-section. Non-circular

cross-sections are permitted that have a perimeter dimension between 4 to 6¼ inches and a cross-section diameter of 2¼ inches maximum. Section 505.10 covers handrail extensions and clarifies that they are not required at handrails in aisles serving seating where handrails are necessarily discontinuous.

Chapter 6 Plumbing Elements and Facilities

Chapter 6 provides technical requirements for plumbed fixtures and toilet and bathing rooms and replaces those for such elements and spaces in ADAAG 4.15 through 4.24.

Previously adopted amendments to ADAAG that provide alternate specifications for building elements designed for children's use are included in the revised guidelines. These specifications address drinking fountains, water closets, toilet compartments, lavatories and sinks. The provisions have been editorially revised to fit into the new format of the revised guidelines but remain substantively the same. As with the current ADAAG, these provisions are provided as exceptions to requirements that are based on adult dimensions. Use of the alternate specifications, while optional, will be driven where an element or space is designed specifically for children's use. The alternate specifications address clear floor space at drinking fountains (602.2), water closets and toilet compartments (604.1, 604.9), grab bar heights (609.3), and knee clearances at lavatories and sinks (606.2).

ADAAG 4.1.3(11) permits toilet rooms provided for the use of occupants of specific spaces, such as the private toilet room for the occupant of a private office, to be ''adaptable.'' Adaptable refers to design that allows certain access features, such as grab bars, to be added or altered after construction when needed to accommodate a person with a disability. The revised guidelines retain this provision but provide more guidance on the type of spaces covered and on what constitutes ''adaptability'' throughout Chapter 6. Instead of relying on a general scoping provision as in current ADAAG, the revised guidelines provide a series of exceptions to technical criteria for doors to toilet and bathing rooms (603.2.3), toilet seat heights (604.4), grab bars at water closets (604.5), bathtubs (607.4), and showers (608.3), and lavatory knee clearance and counter heights (606.2, 606.3). These exceptions are applicable to toilet and bathing rooms ''for a single occupant, accessed only through a private office and not for common or public use.''

602 Drinking Fountains and Water Coolers

Requirements for drinking fountains and water coolers derive from those in ADAAG 4.15. Like ADAAG, a forward approach is required at wall- or post-mounted, cantilevered units in section 602.2. A parallel approach is permitted at other types of units, such as those that are floor-mounted.

Question 24: A forward approach to drinking fountains provides easier access than a parallel approach. Should a forward approach, which includes knee and toe clearances below the unit, be required at all drinking fountains for adults that must be accessible? Such a requirement may be included in the final rule.

It is also specified that clear floor space for either a forward or parallel approach ''be centered on the unit,'' a stipulation not contained in ADAAG but that is consistent with the intent of the clear floor space requirement for a forward approach. ADAAG 4.15.4 requires that controls meet operation requirements and be mounted at the front of the unit or on the side near the front edge. The revised guidelines require operable parts to meet section 309, which not only covers the operation requirements but also requires location within the applicable forward or side reach range.

ADAAG 4.15.3 requires the spout to be at the front of the unit. Section 602.5 is more specific on the spout location and requires the location based on the approach provided; no more than 5 inches from the front edge (including bumpers) and at least 15 inches from the vertical support at units with a forward approach and 3½ inches maximum from the front edge (including bumpers) at units providing a side approach. Additional specification is provided for the water flow based on requirements in the ICC/ANSI A117.1 standard. Like ADAAG 4.15.3, the water flow must be at least 4 inches high to allow insertion of a cup or glass under the flow. ADAAG is more specific with respect to round or oval bowls, which are required to have spouts positioned so that the water flow is within 3 inches of the front edge of the unit. Section 602.6 of the revised guidelines specifies the maximum angle of the water flow measured horizontally relative to the front face of the unit (30 degrees where the spout is located within 3 inches from the front and 15 degrees where the spout is located within 3 to 5 inches from the front).

The advisory committee recommended removing access requirements for people who have difficulty bending or stooping, in part because ADAAG does not provide any technical criteria for such access. The Board has retained a requirement for standing access at a portion of units and has provided in section 602.7 a requirement for the spout height (39 to 43 inches measured from the floor or ground to the spout outlet). This range is based on the height of certain drinking fountain models currently available in the marketplace.

603 Toilet and Bathing Rooms

This section contains requirements for toilet and bathing rooms found in ADAAG 4.22 and 4.23 with several substantive revisions. Like ADAAG, section 603.2.3 prohibits doors from swinging into the clear floor space required for any fixture. However, an exception from this requirement has been provided for individual-use toilet and bathing rooms where clear floor space for an occupied wheelchair is provided beyond the arc of the door swing. The advisory committee felt that the rationale for the ADAAG requirement is most relevant to multi-user toilet or bathing facilities and that in single-user facilities, wheelchair space beyond the arc of the door swing is sufficient. This exception in no way affects the requirement in 603.2.1 for wheelchair turning space. That requirement is applicable to single- and multi-user toilet rooms. For those facilities designed to serve a single occupant accessed only through a private office and not for public or common use, a second exception allows the door to swing into fixture clear floor space where the swing of the door can be reversed. Section 603.4 provides a new requirement that coat hooks and fold-down shelves, where provided, be accessible. Coat hooks must be within the accessible reach ranges specified in section 308, and fold-down shelves are to be mounted from 40 to 48 inches above the floor. (This requirement is also restated for toilet compartments at 604.8.3.) In addition, a requirement for the height of mirrors in the ADAAG section on lavatories (4.19) has been relocated to this section at 603.3.

604 Water Closets and Toilet Compartments

This section integrates requirements in ADAAG 4.16 and 4.17 for water closets and toilet compartments. Requirements in 604.2 through 604.7 apply to water closets, including those located in toilet compartments, and requirements in 604.8 are specific to toilet compartments. Section 604.9 provides criteria for toilet compartments designed according to children's

dimensions as an optional alternative to the requirements based on adult dimensions in section 604.8.

Substantive changes are proposed for the location of water closets and clear floor space at water closets. Section 604.2 specifies that a water closet centerline be located 16 to 18 inches from the adjacent side wall. This differs from ADAAG which requires an 18 inch absolute dimension in 4.16.2 (Figure 28). The advisory committee considered the absolute dimension overly restrictive and pointed to early studies that indicate closer placement is acceptable. Section 604.3 requires that the clear floor space at water closets be at least 60 inches wide and 56 inches deep and prohibits any other obstruction or fixture other than the water closet, grab bars, and tissue dispensers from overlapping this space. ADAAG Figure 28 specifies the same clear floor space dimension but allows lavatories on the same plumbing wall to be mounted as close as 18 inches to the centerline of the water closet. In this case, ADAAG specifies clear floor space at the water closet 48 inches wide minimum (instead of 60 inches) and, in the case of a forward approach, at least 66 inches deep (instead of 56 inches). While the clear floor space at the lavatory ensures additional space near the water closet, the closer placement of the lavatory effectively prohibited space for side transfers to the water closet. In practice, the lavatory cannot be placed as close as shown in ADAAG Figure 28 due to the rear grab bar which must be at least 36 inches long unless the grab bar overlaps the lavatory. Also, the advisory committee noted that the lavatory should not be used to support the weight of a person transferring since lavatories are not required to provide structural support, and they do not provide adequate hand holds. For these reasons, the advisory committee recommended that fixtures, including lavatories, not be permitted to overlap the 60 inch wide space at water closets. This will allow space for side transfers at all accessible water closets. Under this change, the space saved by locating a lavatory closer to the water closet on the same plumbing wall could only be accomplished by recessing the lavatory so that it does not overlap the clear floor space at the water closet.

Revisions are made to requirements for the rear grab bar, flush controls, and toilet paper dispensers. Consistent with ADAAG 4.16.4, the rear grab bar must be at least 36 inches long. However, section 604.5.2 permits a shorter grab bar of 24 inches if wall space is not available for a 36 inch grab bar. This provision will accommodate a recessed lavatory on the plumbing wall and thereby recover space in the toilet room. Section 604.6 requires flush controls to be within the accessible reach ranges (48 inches maximum for a forward approach) instead of the 44 inch maximum permitted by ADAAG 4.16.5. With respect to toilet paper dispensers, ADAAG 4.16.6 specifies a minimum height of 19 inches. Section 604.7 changes this dimension and provides further detail on the location. Dispensers must be 7 to 9 inches in front of the water closet (measured to the dispenser centerline) and must be between 15 and 48 inches above the floor and mounted so that there is a minimum clearance of 1½ inches below or 12 inches above the side grab bar. Most extra large dispensers do not meet these requirements because they block use of grab bars or are too low or too high to comply with ADAAG reach ranges. Toilet paper dispensers are subject to requirements for operable parts in 309.4 (operable with one hand without grasping, pinching, twisting of the wrist, or a force of more than 5 pounds).

Section 604.8 provides requirements for toilet compartments. Section 604.8.1 covers wheelchair accessible compartments, and section 604.8.2 covers compartments providing access for people who are ambulatory. These requirements are based on those in ADAAG 4.17, 4.22.4, and 4.23.4. ADAAG 4.17.3 permits alternate smaller compartment designs in alterations where providing a standard wheelchair accessible stall is not technically feasible. These designs permit a considerably narrower compartment (36 or 48 inches instead of 60 inches minimum) in exchange for more depth (an additional 10 inches). These alternate designs are not included in the revised guidelines for two reasons. The advisory committee did not believe the alternate stall designs provide sufficient wheelchair access because they fail to accommodate the most common diagonal or side transfers. In addition, the Board has sought to limit alternate specifications based on technical infeasibility as discussed at section 202 above.

Section 604.8 states that toilet compartments with more than one plumbing fixture are required to comply with requirements in section 603 for toilet rooms to ensure access to each fixture. For example, if a lavatory is located within a compartment, it would have to be installed so as not to overlap the minimum 60 inch wide clear floor space at the water closet and wheelchair turning space would be required within the compartment. Revisions to the requirements for water closets in section 604.2 through 604.7 apply to those located in toilet compartments as well.

Wheelchair accessible compartments are based on the requirements for ''standard'' stalls in ADAAG 4.17 and Figure 30. Requirements for doors and toe clearance have been slightly modified. Section 604.8.1.2 requires doors to be self-closing and to have accessible door pulls on both sides of the door near the latch. These requirements are not provided in ADAAG and have been added to facilitate access. ADAAG 4.17.4 specifies toe clearance at least 9 inches high below a side and the front partition unless the stall is deeper than 60 inches. Section 604.8.1.4 addresses the minimum depth for this clearance (6 inches beyond the compartment-side face of the partition) which is consistent with other requirements for toe space. This section permits the toe space to be added to the compartment if partitions provide less than 9 inches clearance.

Requirements in 604.8.2 for compartments providing ambulatory access are consistent with requirements in ADAAG 4.22.4 and 4.23.4 except for several changes. With respect to size, the section 604.8.2.1 of the revised guidelines specifies a minimum depth (60 inches) whereas ADAAG does not. Consistent with requirements for wheelchair accessible compartments, section 604.8.2.2 requires that compartment doors have an accessible pull on both sides near the latch. Also, compartment doors are prohibited from swinging into the minimum required compartment area, which may permit an inward swinging door where the compartment depth is sufficiently increased; ADAAG requires that such compartments have outward swinging doors.

605 Urinals

Requirements for urinals are based on those in ADAAG 4.18. ADAAG requires an ''elongated'' rim of an unspecified dimension. The advisory committee considered this requirement as indistinguishable from standard rims and recommended its removal. The Board instead has sought to clarify this provision by specifying a minimum dimension of 13½ inches, measured from the outer face of the urinal rim to the back of the fixture. A requirement permitting a minimum clearance between urinal shields of 29 instead of 30 inches where shields do not extend beyond the rim has been removed.

606 Lavatories and Sinks

The revised guidelines combine into one section technical criteria for

lavatories in ADAAG 4.19 and for sinks in ADAAG 4.24. Provisions for clear floor space in 606.2 revise several ADAAG requirements. The requirement for a minimum 29 inch high apron clearance has been removed because without a specified depth the effectiveness of this requirement is questionable. This change also makes the provision consistent with knee clearance requirements for other elements, such as tables and counters. Clarification has been added that the dip of the overflow can project into the knee and toe clearances since the effect on access is considered negligible. Clarification has been added, consistent with the Board's interpretation of ADAAG, that the required knee and toe clearance need only be applied to one bowl of a multi-bowl sink. The Board has removed a specification for sinks in ADAAG 4.24.4 for a maximum bowl depth of 6½ inches since required knee clearances and counter heights effectively govern this dimension. ADAAG requires that lavatory and sink faucets meet requirements for operable controls in ADAAG 4.27.4 and lists acceptable types (*e.g.,* lever, push, electronically controlled). Section 606.4 requires compliance with 309, which not only covers operating characteristics but also accessible reach ranges. References to acceptable faucet types, which are non-mandatory in nature, have been relocated to an advisory note.

607 Bathtubs

This section corresponds to requirements in ADAAG 4.20 with several revisions concerning clear floor space and shower spray units. Section 607.2 covers clear floor space and requires that it extend at least 12 inches beyond permanent seats provided at the head end of the bathtub. ADAAG Figure 33(b) does not require this additional space and permits the clear floor space to extend only to the end of the seat. This requirement was added so that sufficient space is available for persons using wheelchairs to more properly align themselves with the tub seat for transfer. In section 607.6, the minimum length of the hose for the shower spray unit has been reduced one inch to 59 inches to accommodate metric-based industry conventions. The Board has added a requirement that shower spray units have a water on/off control for greater access. In this section, clarification has been added that where a vertical bar is used to provide an adjustable-height shower unit, the bar must be installed so as not to obstruct the use of grab bars. Similar revisions to the requirements for shower spray units are provided for shower compartments as well in section 608.6.

608 Shower Compartments

Like ADAAG 4.21, this section provides requirements for transfer-type showers and for roll-in showers. ADAAG Figure 57 shows a specific type of roll-in shower equipped with a seat that is required in a portion of accessible guest rooms in transient lodging facilities. This design is incorporated into section 608 and can be used in other types of facilities as well to provide an accessible shower compartment.

Substantive changes have been made concerning water temperature, shower spray units, and curbs. Section 608.6 provides a new requirement for thermal shock protection (to 120 degrees Fahrenheit maximum). ADAAG 4.21.6 provides an exception that fixed shower heads 48 inches high maximum can be used instead of the required hand held unit in ''unmonitored facilities where vandalism is a consideration.'' This exception has been removed due to a lack of clarity on the types of facilities that qualify for this exception. Section 608.7 permits curbs up to ½ inch provided that those above ¼ inch are beveled with a slope of 1:2 maximum. This differs from ADAAG 4.21.7 which permits such a curb (although without beveling) at transfer-type showers but not at roll-in showers. The advisory committee felt that a beveled curb will allow access into roll-in showers while permitting a change in level that can help keep water in the compartment, a common concern with roll-in showers. This provision is consistent with requirements for changes in level in section 303.3.

Other revisions have been made to clarify that:

- where multiple grab bars are used instead of a single continuous grab bar from wall to wall, they must be installed at the same height (608.3);
- shower seats can be attachable or integral (608.4);
- controls, faucets, and shower spray units must be installed on the rear wall at showers with seats so that they are within reach from the seat (608.5); and
- shower spray units in transfer-type showers must be 15 inches maximum from either side of the centerline of the seat (608.5).

609 Grab Bars

Grab bar specifications are consistent with those in ADAAG 4.26, including required mounting heights at toilet and bathing fixtures shown in ADAAG Figures 29, 30, 34, and 37. Like ADAAG 4.26.2, a diameter between 1 and 1½ inches is required, but section 609.2 provides further specifications for allowable shapes providing an equivalent gripping surface: a 2 inch maximum cross-section dimension, a perimeter dimension between 4 and 4–11/16 inches, and edges with a ⅛ inch minimum radius. This section also provides a minimum clearance of 15 inches above grab bars (although a 1½ inch clearance is allowed between grab bars and shower controls, shower fittings, and other grab bars). Consistent with the ICC/ANSI A117.1 standard, clarification is provided in section 609.6 that grab bars can be installed in any manner that provides a gripping surface at the specified locations and that does not obstruct clear floor space.

610 Seats

Requirements for bathtub and shower seats are based on ADAAG requirements in 4.20.3 and 4.21.3. Section 610.2 addresses bathtub seats and requires removable seats to be 15 inches deep minimum to 16 inches deep maximum and permanent head-end seats to be 15 inches deep minimum. A height of 17 to 19 inches is required. This differs from ADAAG which does not specify a width for removable seats or a height, and requires an absolute dimension of 15 inches for head-end seats.

Section 610.3 covers shower seats and allows a rectangular shaped seat in addition to the L-shaped seat specified in ADAAG Figure 36. Rectangular seats, like removable tub seats, must be 15 inches deep minimum to 16 inches deep maximum. This section provides more specification than ADAAG for the size of L-shaped seats. ADAAG Figure 36 provides maximum dimensions for this type of seat. The revised guidelines provide minimum dimensions consistent with the ICC/ANSI A117.1 standard. A specification also has been added requiring that the seat extend from the back wall to a point within 3 inches of the compartment entry or seat wall width to reduce problems from water infiltration. The maximum distance of the seat from the seat wall has been increased from 1½ to 2½ inches.

Question 25: The revised guidelines more clearly permit a choice between rectangular and L-shaped seats for transfer and roll-in shower stalls. Is one shape more usable and accessible than the other?

611 Laundry Equipment

New requirements are provided for washing machines and clothes dryers, equipment ADAAG does not address. These requirements are based on the ICC/ANSI A117.1 standard. This section

requires clear floor space for a parallel approach (611.2), accessible operable parts (611.3), and the height of appliance openings: 34 inches maximum above the floor for top-loading machines and between 15 to 34 inches for front-loading machines (611.4).

Chapter 7: Communication Elements and Features

This chapter provides technical criteria for communication elements such as fire alarms, signs, telephones, assistive listening systems, and automatic teller machines (ATMs) and fare machines. Extensive revision of requirements is proposed for these elements, particularly fire alarm systems, signs, and ATMs and fare machines.

702 Fire Alarm Systems

This section is vastly different from ADAAG 4.28 in providing updated and more detailed criteria for the visual component of fire alarm systems. The advisory committee based its recommendations on information developed by a coalition of organizations representing people who are deaf or hard of hearing or who have epilepsy, the fire alarm industry, and Underwriters Laboratories, Inc. (UL). The recommendations represent the goal of updating specifications for alarms to improve protection of people who are deaf or hard of hearing while minimizing the effect on persons with photosensitive epilepsy. Through coordination with the National Fire Protection Association (NFPA) and ANSI, which were represented on the advisory committee, the proposed criteria are virtually identical to updated requirements in the NFPA 72 (1996) and the ICC/ANSI A117.1 standards.

Specifications for audible alarms in ADAAG 4.28.2 have been revised as well. The maximum sound level for alarms is reduced from 120 to 110 decibels as more appropriate and to guard against tinnitus.

Question 26: ADAAG does not address the frequency of audible alarms. The Board requests information on the optimal frequency range for people who are hard of hearing. Responses should include, where possible, supporting data indicating the benefit to people who are hard of hearing and others.

Requirements for visual alarms are provided in section 702.3. In section 702.3.1, the maximum flash rate has been reduced from 3 Hertz (Hz) to 2 Hz. Research conducted by the coalition found a minimum flash rate of 1 Hz to be the slowest rate that does not significantly increase reaction time of people who are deaf or hard of hearing. Flash rate is considered the primary factor affecting persons who are photosensitive. A 1 Hz flash rate is considered sufficient; an allowance up to 2 Hz is specified to allow a tolerance for manufacturing and field conditions. New language clarifies the parameters over which an appliance must meet the specified flash rate since changes in voltage can affect the flash rate.

New criteria are provided in section 702.3.2 for light dispersion which address the required percentage of rated intensity at various angles from the visual appliance. The requirements, provided in table form (Tables 702.3.2.1 and 702.3.2.2) distinguish wall- and ceiling-mounted appliances and are based on UL 1971, Signaling Devices for the Hearing Impaired. ADAAG does not provide criteria for dispersion of visual alarms. Section 702.3.4 addresses the required location of appliances. Wall-mounted appliances are required to be 80 to 96 inches above the floor (measured to the bottom of the appliance), except that appliances that are part of a smoke detector are to be located 4 to 12 inches from the ceiling (measured to the top of the smoke detector). These revisions are consistent with NFPA 72, including the mounting height for smoke detectors. ADAAG 4.28.3 does not specifically address visual appliances integrated with smoke detectors and specifies an absolute height of 80 inches (or 6 inches below the ceiling, whichever is lower). However, photometric calculations of lamp intensity for mounting heights of 80 and 96 inches show only nominal differences and are practically equivalent. Further, the ADAAG height specification is considered too restrictive. Ceiling-installed appliances are required to be 30 feet maximum above the floor.

Section 702.3.4 provides new requirements under which the minimum lamp intensity is determined by the size of the area served. These specifications serve to minimize the number of appliances in a room or space in order to prevent the cumulative flash rate of multiple strobes, which can affect people with photosensitive epilepsy. Multiple appliances are allowed only where coverage by a single appliance is not possible due to room size, shape, construction or furnishings. In this case, criteria are provided to prevent the effective flash rate from posing a hazard: placement of two appliances on opposing walls, synchronization of flashes, or minimum separation between appliances (55 feet in any 135-degree field of view) in rooms 80 feet by 80 feet or greater. The minimum required effective intensity is specified in table form (Tables 702.3.4.2 and 702.3.4.3) for wall-and ceiling-mounted appliances based on the size of the covered area and the permitted number of appliances. These specifications are based on NFPA 72 criteria. The minimum intensities are based on the rule that illumination from a light source will vary in proportion to the square of the distance to the light source. Combined with the dispersion requirements, a minimum 0.0375 lumens per square foot is provided throughout the covered areas. As such, appliances with an effective intensity of 15 candela are allowed in small spaces. ADAAG 4.28.3 requires a minimum 75 candela with a general maximum separation of 50 feet. The criteria of the table are based on location of wall-installed appliances at the midpoint of the longest side of the area served and the location of ceiling-installed appliances at the center point of the covered area. Alternate specifications for the minimum effective intensity are provided for appliances located elsewhere.

Section 702.3.5 provides revised requirements for the spacing and intensity of appliances located in corridors. Corridors 20 feet or less in width are required to have appliances with a minimum effective intensity of 15 candela spaced from 50 to 100 feet apart and located no more than 15 feet from each end of the corridor. Interruptions in the concentrated viewing path, such as elevation changes, are to be treated as the end of the corridor. Corridors greater that 20 feet in width are treated like other spaces. This differs from ADAAG 4.28.3 which specifies a maximum corridor spacing of 50 feet and a minimum effective intensity of 75 candela. The intensity and greater spacing are permitted because the linear nature of corridors allows a direct view of appliances and the spacing requirements serve to minimize the number of appliances within view for the benefit of people who are photosensitive.

Like ADAAG 4.28.4, criteria specific to visual alarms in guest rooms are provided. Significant changes have been made. ADAAG technical requirements for ''auxiliary'' alarms in effect permit use of portable types of alarms. Use of portable devices have proven unsatisfactory in that the responsibility for installing such devices has fallen to guests. Persons needing these devices also do not have the benefit of knowing whether the device is ready to function properly. Section 702.3.6 revises the criteria for guest room applications to

require permanent installation of visual alarms. Visual alarms activated by smoke detectors and the building fire alarm system, where provided, are required, and signaling must be supervised. One appliance can be used for activation by both smoke detectors and the building alarm system so long as the building alarm system is not activated by the smoke detector. This interconnection has not been embraced by the fire alarm industry due to technical differences between the two systems. However, this interconnection is only permitted where smoke detector activation does not trigger the building alarm system. Greater detail is also provided on the location of appliances. ADAAG 4.28.4 requires the signal to be ''visible in all areas of the unit.'' The revised guidelines, consistent with NFPA 72, specifies placement and intensity considered necessary to awake sleeping persons. Appliances must be no more than 16 feet from the location of the head end of the bed, measured horizontally. The Board has added clarification that appliances must be directly or indirectly visible in all parts of the sleeping room or suite. Appliances must have minimum effective intensity of 110 candela (if more than 2 feet below the ceiling) and 177 candela (if less than 2 feet below the ceiling). ADAAG requires a 75 candela minimum. The increased candela requirements are considered necessary to awaken people asleep, with an even greater increase provided for appliances closer to the ceiling.

703 Signs

The technical section on signs, like the section on alarms, represent significant departures from ADAAG. This section provides more detailed requirements for signs than ADAAG 4.30. The technical criteria proposed were developed by the ANSI A117 Signage Task Force. The advisory committee recommended adoption of the task force's requirements with some modifications. The task force sought to update requirements for signs to improve access for the widest range of users and to provide specifications that were clear, direct, and less likely to be misinterpreted. While striving to prohibit undesirable design characteristics and to make more specific what constitutes accessible signs, the task force also wanted to provide requirements in a way that would allow considerable design flexibility.

Requirements are provided for signs read by touch and for signs read visually. Scoping provisions in section 216 require permanent designation of permanent rooms and spaces to meet requirements for both tactile and visual access. This is a substantive change from ADAAG 4.1.3(16) which requires that such signs comply mainly with specifications for tactile access only. The signage task force considered this requirement insufficient for visual access. Section 703 requires both types of access but allows a choice: permanent signs can comply with section 703.2 which provides requirements for both tactile and visual access achievable in one sign or access can be provided separately through two signs, one that is tactile in accordance with 703.3 and one that is visual in accordance with 703.4. There are some differences between the requirements for combined tactile-visual signs and those provided separately, which represent slight compromises in the desired level considered necessary for signs providing both tactile and visual access. In either case, tactile signs are required to contain Braille complying with 703.5, and pictograms, where required to be tactile, must meet requirements in 703.6.

Signs that provide direction to, or information about, spaces or facilities, are subject to the requirements in section 703.4 for visual access, which is consistent with ADAAG 4.1.3(16). Required symbols of access are provided in section 703.7.

Requirements in 703.2 for signs providing both tactile and visual access specify:

- A non-glare finish and light-on-dark or dark-on-light contrast between characters and their background (703.2.1);
- Tactile characters raised at least 1/32 inch with a minimum 3/8 inch separation from raised borders or other decorative elements where provided (703.2.2);
- Tactile characters must be upper case, sans serif, 5/8 to 2 inches high, and meet requirements for character width and stroke thickness (703.2.3);
- Minimum spacing between characters (703.2.4) and lines of text (703.2.5); and
- Sign mounting height (703.2.6) and location (703.2.7).

The specifications for finish and contrast are similar to those in ADAAG 4.30.5 except that references to ''eggshell'' and ''matte'' as non-glare finishes have been removed because this is not always the case. For example, matte stainless steel is not generally considered ''non-glare.''

Requirements in 703.2 for tactile characters, character forms, and character and line spacing differ from ADAAG 4.30 in that:

- The minimum 3/8 inch separation between raised characters and borders or other decorative elements is new and is designed to limit interference with tactile reading (703.2.2);
- Only sans serif fonts are allowed and italic, oblique, script and other highly decorative styles are clearly prohibited (ADAAG allows ''simple'' serif forms; a term without specific meaning in the industry that has been removed for both clarity and improved access) (703.2.3.2);
- The specified character width of 55% to 110% of the character height is slightly different than the 60% to 100% ADAAG requires, but the characters specified for determining the new proportions (upper case ''O'' for width and upper case ''I'' for height), which are based on industry convention, make the effect of this change negligible (703.2.3.3);
- The character height is based on the upper case ''I'' instead of the upper case ''X'' ADAAG specifies (703.2.3.4);
- A character (the upper case ''I'') is specified for determining stroke thickness (703.2.3.5);
- The maximum stroke thickness has been reduced from 20% to 15% of the character height since thinner strokes are easier to read tactually (703.2.3.5);
- More specific guidance is provided for the stroke thickness of raised characters with beveled or rounded cross sections in recognition that they are perceived visually by the full (*i.e.*, base) dimension and tactually by the top dimensions (ADAAG requirements for stroke thickness do not apply to raised characters) (703.2.3.5); and
- Specifications for character spacing (1/8 to 3/8 inches), with additional guidance for beveled or raised characters, and for line spacing (135% to 170% of character height) are new and address both visual and tactual legibility (703.2.4 and 703.2.5).

There are changes in the mounting height and location of signs. Characters are required to be installed between 48 and 60 inches high measured from the baseline of characters. ADAAG 4.30.6 specifies tactile signs to be centered at 60 inches above the floor, a specification that was considered inadequate because it does not regulate the location of characters and can permit characters located outside the proper reach range. Like ADAAG, tactile signs are required on the latch side of doors or, if no wall space is available, on the nearest adjacent wall. An exception is provided for signs located on the push side of doors that have closers but that do not have devices that hold the door open. The revised guidelines requires that signs be located

on the right side at double doors, a more uniform location that can make them easier to locate tactually. Clear floor space of 18 by 18 inches minimum centered on the sign is required beyond the arc of the door swing, which clarifies the requirements in ADAAG 4.30.6 that signs be located so one can ''approach within 3 inches of signage without encountering protruding objects or standing within the swing of a door.''

Where separate tactile and visual signs are provided to convey the same information, the requirements for tactile-only signs in section 703.3 are different in several respects:

- There are no requirements for finish and contrast;
- A smaller character height of ½ to ¾ inches is required (instead of ⅝ to 2 inches as specified for combination signs and by ADAAG) because it is believed that smaller characters are easier to read tactually (703.3.2.4);
- Only a maximum stroke width (15%) is specified because information indicates that the thinnest possible stroke is preferred by people who read tactually (703.3.2.5); and
- Closer character spacing of ⅛ to ¼ inches is required as preferable for tactual reading (spacing up to ⅜ inches is allowed for combination tactile-visual signs) (703.3.3).

Visual signs provided separately from tactile signs are held to different criteria considered optimal for visual legibility. Under section 703.4, these signs are subject to the same requirements for finish and contrast, character width, and line spacing. Criteria for raised letters, including mounting location, do not apply. Requirements for character forms and spacing, line spacing, and mounting height are considerably different:

- Lower case characters are permitted, as in ADAAG, because words in all upper case are considered difficult to read visually (703.4.2.1);
- ''Conventional'' character styles are specified, which can include fonts with serifs because serifs do not necessarily reduce visual readability, although italic, oblique, script and highly decorative forms are prohibited (ADAAG does not specify the style of non-tactile characters) (703.4.2.2);
- A range for the minimum character height of ⅝ inch to more than 3 inches is specified in Table 703.4.2.4 according to sign height and the viewing distance, information much more detailed than ADAAG 4.30.3, which requires characters to be ''sized according to the viewing distance'' although a 3 inch minimum is specified for signs 80 inches or more above the floor (703.4.2.4);
- The maximum character stroke thickness (30% of the character height) is greater than that specified for tactile signs (15%) or in ADAAG (20%) (703.4.2.5);
- Character spacing between 10% to 35% of the character height differs from the spacing for tactile signs (703.4.3); and
- A minimum mounting height of 40 inches is required, which differs from the height of tactile signs and from ADAAG which does not address the height of visual signs (703.4.5).

Consistent with ADAAG, tactile signs must contain Grade II Braille. Section 703.5 differs from ADAAG 4.30.4 by providing specific criteria for Braille, including dot height and base diameter, dot and cell separations (Table 703.5), location (below raised text), minimum spacing from raised characters (¼ inch) and from raised borders (⅜ inch), and the height from the floor (40 to 60 inches measured from the baseline of Braille cells). Requirements for pictograms in 703.6 and required symbols of accessibility in 703.7 are consistent with corresponding provisions in ADAAG 4.30.4 and 4.30.7.

704 Telephones

This section provides requirements for wheelchair access, volume controls, and TTYs. Substantive differences from requirements in ADAAG 4.31 concern volume controls, hearing aid compatibility, and TTYs.

Section 704.3 requires volume controls that provide a gain up to at least 20 decibels and an intermediate gain of 12 decibels, and have an automatic reset. ADAAG 4.31.5 requires a gain between 12 to 18 decibels, which can be greater if an automatic reset is provided. The advisory committee recommended increasing the gain to 20 decibels and to require an automatic reset. The Board has revised the requirement for consistency with accessibility guidelines the Board issued under section 255 of the Telecommunications Act of 1996, which provides a similar requirement for other types of phones. In rulemaking on the Telecommunications Act Accessibility Guidelines, persons who are hard of hearing reported having trouble using public pay telephones because of inadequate receiver amplification levels. Many comments to the docket supported adjustable amplification ranging from 18–25 decibels of gain as proposed in that rulemaking. However, several telephone manufacturers cited the National Technology Transfer and Advancement Act of 1996, which requires the Federal government to make use of technical specifications and practices established by private, voluntary standards-setting bodies, wherever possible. The ICC/ANSI A117.1–1998 standard requires certain public pay telephones to provide 12 decibels of gain minimum and up to 20 decibels maximum and that an automatic reset be provided. In recognition of the National Technology Transfer and Advancement Act, this amplification level was specified in the Telecommunications Act Accessibility Guidelines even though information was received in that rulemaking indicating a gain of 25 decibels is not a problem for current telephone technology. The requirement in section 704.3 of the revised guidelines is consistent with both the ICC/ANSI A117.1 standard and the Telecommunications Act Accessibility Guidelines. Under the Telecommunications Act, the Board intends to publish a market monitoring report. Should this market monitoring report show that persons who are deaf or hard of hearing continue to report having trouble using telephones because the level of amplification is not high enough, the Board may revisit this issue in the future.

Question 27: The Board seeks information from pay telephone manufacturers and providers on the time frame necessary to produce products that meet the proposed specifications for volume control.

Question 28: Mute features on public pay telephones can increase audibility by temporarily disconnecting the telephone's microphone while the user listens through the earpiece so that background noise is not amplified through the earpiece. The Board seeks information on the feasibility and cost of equipping new and existing public pay telephones with a mute button. Comment is sought on whether such a requirement should be included in the final rule.

ADAAG 4.31.5 requires telephones to be compatible with hearing aids. This is required for all wheelchair accessible telephones and 25% of all other public pay telephones. The Board has removed this requirement as unnecessary because telephones made in or imported into the U.S. are already required to be compatible with hearing aids as a result of the Hearing Aid Compatibility Act of 1988.

The Board has added requirements for telephones with TTYs in 704.4 to address wheelchair access. ADAAG 4.31.9 does not specifically require that telephones with TTYs be wheelchair accessible. As revised, the operable parts of both the TTY and the telephone must be accessible as required in section

309, which specifies accessible reach ranges. Knee and toe space for a forward approach is required below the TTY, and when in use, the touch surface of the TTY keypad must be between 30 to 34 inches from the floor. This height will provide access for both people who use wheelchairs and those who do not. All TTYs are required to be wheelchair accessible, although an exception is provided for TTYs at telephones located in cubicles equipped with fixed seats. Under this exception, which applies only to assembly occupancies, half the number of TTYs are not required to be wheelchair accessible.

Question 29: Requirements for TTYs do not address the height of display screens. Due to the typical character size displayed, users must be in close proximity to the screen. The Board seeks information on TTY screen heights that are appropriate for people who use wheelchairs and for standing persons and whether the requirement for ATM display screens is appropriate for TTYs as well. The Board may include a specification for the height of TTY display screens in the final rule.

ADAAG 4.31.9(3) recognizes portable TTYs as an alternative to those permanently affixed to telephone enclosures in certain limited situations as an ''equivalent facilitation.'' Like other examples of equivalent facilitation, this provision has been removed.

705 Detectable Warnings

The technical criteria for detectable warnings are consistent with those in ADAAG 4.29 and those required on the boarding platforms of transit stations in ADAAG 10.3.1(8). Provisions have been added concerning boarding platforms that generally recognize alternative tactile surfaces equally detectable underfoot or other designs or technologies that provide equal or superior drop-off warning. Provisions originally reserved in ADAAG concerning doors to hazardous areas (4.29.3) and stairs (4.29.4) have been removed. Provisions pertaining to hazardous vehicular areas (4.29.5), reflecting pools (4.29.6), and curb ramps (4.7.7) that were suspended are not retained in the revised guideline.

706 Assistive Listening Systems

Like ADAAG 4.33, the revised guidelines recognize acceptable types of assistive listening systems such as induction loops, infrared systems, FM and AM radio frequency systems, hard-wired earphones, and other equivalent devices. ADAAG 4.33.6 requires that seats served by assistive listening systems be within a viewing distance of 50 feet from the performance area and have a complete view of the performance area. The distance requirement has been removed since it may not be appropriate in certain types of assembly areas, particularly large stadiums and arenas. The Board has removed the requirement for a ''complete view'' of the performance area because this implies that certain seats can be designated for use with assistive listening systems, which contradicts the intent of the revised guidelines that such access be available at most seats in an assembly area.

Two requirements have been added for receivers. Receivers must have a ⅛ inch standard mono jack (or equivalent adapters where other jacks are provided) so that users can use their own cabling as necessary. Receivers required to be compatible with hearing aids (25%) must be neck loops since this type interfaces with hearing aid T-coils. The advisory committee recommended allowing the use of ''compatible headsets.'' The Board has not included this recommendation since such headsets, while technically compatible with hearing aids, are not usable or comfortable with all types of hearing aids.

The performance of assistive listening systems is a concern among users. The quality and capability of systems largely determine the quality of sound transmission. Sound quality, internal noise, signal-to-noise ratio, signal strength, and boost vary among products. As a result, some systems do not adequately meet the needs of people who are hard of hearing. For example, the boost of some products may amplify sound adequately for people with mild hearing loss but not for those with profound hearing loss. Currently, there are no guidelines or standards for the performance of assistive listening systems. In the belief that standards should be developed to provide guidance in selecting products of sufficient quality and capability, the Board funded a study on assistive listening systems that was completed in 1999. Conducted by the Lexington Center, this project included a collection of information on assistive listening systems, a review of the state-of-the-art with respect to assistive listening systems, and a survey of consumers, service providers, dispensers and manufacturers to determine how effective assistive listening systems are at present and what the major problems, limitations, and complaints are regarding existing systems. With this information, the researchers developed objective means for specifying the overall characteristics of any assistive listening system, from sound source to listener's ear, to be able to predict how well the system will work in practice and to determine objective criteria for establishing guidelines or recommendations for the use of assistive listening systems in public places. Consumers, manufacturers, and installers identified signal quality as the primary issue of concern. A wide range of other concerns were also expressed:

- Consumers voiced concerns about appropriate system and receiver type, coupling alternatives, compatibility with aids, interference, availability and logistics of use, and maintenance;
- Manufacturers, installers, and providers identified component cost and quality, microphone utilization, pre-processing strategies, compatibility across multiple systems, field strength, and standardization and regulation as issues.

Researchers have developed Speech Transmission Index software that can assess ALS signal quality on-site using a multi-media laptop computer. The program will be available next year as a download from the Board's website. The Lexington Center will also develop and distribute a series of technical assistance bulletins for consumers, facility operators, and installers outlining its research, findings, and recommendations.

Question 30: Comment is sought on the appropriateness of these criteria for assistive listening systems and their inclusion as technical requirements in the revised guidelines. Specifications based on these criteria may be included in the final rule.

707 Automatic Teller Machines and Fare Machines

Requirements for automatic teller machines (ATMs) and fare machines have been extensively revised and expanded to provide more specific guidance on access to such equipment for people with vision impairments. Substantive changes are proposed to requirements for ATMs in ADAAG 4.34 and for transit station fare vending machines in ADAAG 10.3.1(7).

Question 31: While section 707 specifically addresses ''automatic teller machines'' and ''fare vending machines,'' the Board is considering covering all types of interactive transaction machines, such as point-of-sale machines and information kiosks, among others. Information is requested on any possible design conflicts between the requirements of this section and any specific types of interactive transaction machines. The final rule may be modified to specifically address

unique characteristics of certain types of interactive transaction machines.

Clear floor space requirements in section 707.2 are consistent with ADAAG. Section 707.3 requires operable parts to comply with section 309, which also covers accessible reach ranges. ADAAG 4.34.3 requires this as well but also provides specifications on side reach ranges specific to ATMs only. This criteria establishes maximum reach heights ranging from 46 to 54 inches that are based on the depths of reach ranging from 10 inches to 24 inches. For consistency with the rest of the revised guidelines, these specifications have been removed and the basic reach range specifications in 309 are applied. The revised guidelines require that operable parts must be differentiated by sound or touch prior to activation. An exception in ADAAG 4.34.3 clarifies that, where alternate controls are provided that allow a function to be performed in a substantially equivalent manner, only the controls for that function are required to be accessible. This exception has been removed as unnecessary since redundant operable parts that are accessible are generally acceptable in all cases.

New specifications are provided so that access to input and output devices is provided for people with vision impairments. These requirements provide clearer guidance than ADAAG 4.34.5 which requires instructions and all information for use to be ''accessible to and independently usable by persons with vision impairments.'' The arrangement and tactile qualities are standardized for uniformity to facilitate use by people with little or no vision. Section 707.4 specifies:

- The same degree of privacy of input provided for all users (707.4.1);
- Tactually discernable key surfaces raised at least 1/25 inch from the surrounding surface with outer edges having a radius no more than 1/50 inch (707.4.2);
- A minimum 1/8 inch separation between keys with function keys separated from numeric keys by at least triple the distance of separation provided between numeric keys (707.4.3);
- Arrangement of numeric keys according to the standard 12-key telephone keypad, with the number five key designated by a single raised dot (707.4.4);
- A standard arrangement, tactile marking, and color coding of function keys so that the keys are provided in the following order (left to right or top to bottom) with the tactile markings and color indicated: enter or proceed key (raised circle/ green), clear or correct key (raised vertical line or bar/ black), cancel (raised ex/ red), add value key (raised plus sign/ blue), decrease value key (raised minus sign/ yellow) (707.4.5).

Question 32: The Board seeks comment on the appropriateness of these specified colors, particularly for people who are color blind.

Question 33: ATMs often reject input when maximum time intervals are exceeded. Users are at risk of having the ATM card withheld and may encounter additional transaction charges due to repeated attempts to access the machine. Should the Board include a specific requirement that would allow users to extend the maximum time intervals between transactions beyond the amount of time typically allotted? Where possible, responses should include information on the availability of technology and on any impacts, including costs, in complying with such a requirement. The Board may consider including such a requirement in the final rule.

Section 707.5 covers output devices and requires:

- The same degree of privacy of output provided for all users (707.5.1);
- Transaction prompts within each operation and verification of all user input (707.5.2 and 707.5.3);
- Visual and audible operating instructions that are initiated by the user, that have an expedited process for experienced users, and that have orientation features for users unfamiliar with the physical features of the machine (707.5.4);
- Video display screens to be visible from a point 40 inches above the center of the clear floor space in front of the machine (707.5.6);
- Characters of video display screens to be in a sans serif font, to be at least 3/16 inch high, and to contrast with the background, either light-on-dark or dark-on-light (707.5.6.2);
- Paper currency to be dispensed in descending order with the lowest denomination on top (707.5.7); and
- Providing options for receipts in print, audible format, or both (707.5.8).

Consistent with ICC/ANSI A117.1–1998, sections 707.4.1 and 707.5.1 specify that the same degree of privacy of input and output is to be available to all individuals using the system, and 707.5.5 specifies that audible instructions are to provided through a standard audio mini jack (which would allow individuals to listen to the information through a headset or ear piece), a telephone handset, a wireless transmission system, or another mechanism, all of which ensure privacy. The Board anticipates that alternative privacy systems will be activated by individuals that require them. Furthermore, the Board assumes that ear pieces, headsets, or other types of receivers will be personal equipment provided by end users. Earpieces are very small and can be carried in a shirt pocket or change purse.

Question 34: The Board seeks comment on whether ATM manufacturers or banks intend to provide customers who need audio output receivers for accessing audible output. In addition, the Board seeks to know if customers would or currently do carry receivers or if they view providing their own receivers as an unreasonable expectation.

Question 35: The Board seeks information on the availability of ATMs that meet the output requirements of section 707.5 and the impact, including costs and technological difficulties, in developing new products that comply. Information is also sought on the practice of redeploying ATM equipment and the impact of the output requirements on this practice. Specifically, what is the average lifespan of an ATM and how often might a single ATM be redeployed?

708 Two-Way Communication Systems

This section provides criteria for two-way communication systems where they are provided to gain admittance to a facility or to restricted areas within a facility. These systems must provide audible and visual signals so that they are accessible to people with vision or hearing impairments. Where handsets are provided, the cord must be at least 29 inches long so that access is provided for people using wheelchairs. These requirements derive from those in ADAAG 11.1.3 for judicial, legislative, and regulatory facilities.

Captioning

The Department of Justice Title III regulation addresses access to auxiliary aids and services. Section 36.303(a) (28 CFR Part 36) provides that ''[a] public accommodation shall take those steps that may be necessary to ensure that no individual with a disability is excluded, denied services, segregated or otherwise treated differently than other individuals because of the absence of auxiliary aids and services, unless the public accommodation can demonstrate that taking those steps would fundamentally alter the nature of the goods, services, facilities, privileges, advantages, or accommodations being offered or would result in an undue burden, i.e., significant difficulty or expense.'' The term ''auxiliary aids and

services'' includes, ''qualified interpreters, note takers, computer-aided transcription services, written materials, telephone handset amplifiers, assistive listening devices, assistive listening systems, telephones compatible with hearing aids, closed caption decoders, open and closed captioning, telecommunications devices for deaf persons (TDD's), videotext displays, or other effective methods of making aurally delivered materials available to individuals with hearing impairments.''

The Board is aware that several means of providing captioning for movie theaters are available. This includes both open-captioned and closed-captioned access to the audio information presented in movies. One method for making movies accessible is a system that synchronizes captions and action by projecting reverse text images onto a wall behind an audience. The reverse text is then reflected by transparent screens at individual seats where movie goers can read the script on the screen and view the movie through the screen simultaneously. This type of auxiliary aid and others may require built-in features to make them usable. The Board is aware that other innovative methods of providing accessible communications will soon be available.

Question 36: The Board is interested in more information about various types of captioning as it relates to the built environment. Building operators, managers, consumers, and manufacturers are requested to provide information about what technical provisions are necessary to include in ADAAG to facilitate or augment the use of auxiliary aids such as captioning and videotext displays. People who are deaf or hard of hearing are particularly invited to comment on the various options for providing captioning that would best facilitate effective communication. Where necessary, the Board may include provisions for conduit, electrical service, screen anchoring devices at seats, or other requirements that make providing accessible communication possible in the built environment.

Convenience Food Restaurants

Convenience food restaurants, otherwise known as fast food restaurants, often provide consumers the opportunity to order food from a drive through facility. These facilities usually require voice intercommunication. The Department of Justice has required restaurants to accept orders at pick-up windows when the communications system is not accessible to deaf, hard of hearing, or other people who are unable to use voice communication.

Question 37: Should the Board require that convenience food drive through facilities provide accessible communications. If so, what means would provide the greatest access for a variety of people with disabilities? It has been suggested that an ATM type machine could substitute for voice communication systems currently used. Is such an application practical?

Chapter 8: Special Rooms, Spaces, and Elements

This chapter covers specific elements, rooms and spaces, including assembly areas, dressing, fitting, and locker rooms, medical care facilities, transient lodging, and detention and correctional facilities. Under the new format of the revised guidelines, scoping provisions contained in ADAAG for special occupancy sections have been relocated to Chapter 2. Only technical requirements not otherwise generally addressed are provided here for the rooms and spaces covered by this chapter.

802 Wheelchair Spaces and Designated Aisle Seats in Assembly Areas

This section provides requirements for wheelchair spaces and designated aisle seats in assembly areas. Requirements for wheelchair space surfaces (802.2), width (802.3), depth (802.4), and approach (802.5) are substantively consistent with specifications in ADAAG 4.33, as recommended by the advisory committee. Consistent with a recommendation from the advisory committee, clarification has been added in 802.5 that access to any wheelchair space shall not be through more than one adjoining wheelchair space.

Question 38: Current ADAAG does not expressly address the issue of overlap between wheelchair spaces and circulation routes. The Board is considering adding a provision in the final rule that would clearly prohibit circulation paths from overlapping wheelchair spaces. Comment is sought on whether such a provision should be included in the final rule.

As recommended by the advisory committee, the exception in ADAAG 4.33.3, that permits wheelchair spaces to be clustered in seating areas with sight lines that require slopes greater than 5%, has been removed. The removal of this provision is not intended to prohibit the construction of traditional seating areas such as stadiums, bleachers and balconies.

Section 802.7 requires that each readily removable companion seat be located ''next to and in the same row as each required wheelchair space'' so that there is ''shoulder-to-shoulder'' alignment between users of the wheelchair space and of the adjacent companion seat. This is a change from ADAAG 4.33.3 which requires companion seats to be fixed, as discussed in section 221.3 above. The Board also has added clarification on the location of such seats. Some entities have misinterpreted the phrase ''next to'' in the current ADAAG as permitting the placement of companion seating in a row in front of or behind the accompanying wheelchair space.

Specifications for designated aisle seats in 802.8 are consistent with requirements in ADAAG 4.1.3(19)(a).

Section 802.6 requires dispersion of accessible seating in assembly areas so as to provide individuals with disabilities seating choices that are comparable to those offered to patrons without disabilities. Specifically, in assembly areas with more than 300 seats, wheelchair spaces and designated aisle seats must be dispersed throughout the assembly area in a manner that ensures viewing angles and choices of admission prices that are comparable to those provided to other spectators. This does not represent a change from ADAAG 4.33.3.

Where the minimum number of required wheelchair spaces or designated aisle seats is not sufficient to allow for complete dispersion in terms of the availability of all possible admission prices and viewing angles, 802.6 specifies criteria for dispersion in the following order of priority: admission prices, horizontal dispersion, and vertical dispersion. These criteria are intended to be consistent with Department of Justice (DOJ) interpretation of ADAAG 4.33.3 that wheelchair spaces be provided so that people with disabilities have ''a choice of admission prices and lines of sight comparable to those for members of the general public.''

Section 802.6.1 requires the dispersal of accessible seating by the price of admission, which means that wheelchair spaces and designated aisle seating must be provided in each price level where the ticket prices are distinguished by, or differ according to, the location of the seating. The advisory committee considered dispersion according to admission prices to be primarily an operational matter and recommended that it be removed. The Board believes that such dispersion is an important consideration in the design of assembly areas and the

location of accessible seating and has retained this provision.

Assembly facility designers and people with disabilities have requested clarification of the current requirement that wheelchair spaces be dispersed. The Board has added requirements for horizontal and vertical dispersion. Subject to the scoping requirements shown in Table 221.2.1, wheelchair spaces and designated aisle seats must be located at each accessible level in the assembly area, and in each balcony or mezzanine that is located along an accessible route.

Section 802.6.2 specifies that wheelchair spaces and designated aisle seats shall be located in a manner to provide viewing angles that are, in general, representative of the horizontal viewing angles that are provided to spectators who occupy non-accessible seats. In the past, wheelchair spaces were often located only at the ends of rows, where a few of the standard seats in a seating configuration would be removed and replaced with wheelchair spaces. This section clarifies that this practice is not permissible, and, instead, that wheelchair spaces must be provided in a variety of locations across the horizontal rows of seats.

The requirement for vertical dispersion in 802.6.3 seeks to ensure equal treatment of people with disabilities in terms of the viewing distance from the performance area or playing field. Like all patrons, individual preferences vary among people with disabilities. The Board places significant value on having equal opportunity to select a viewing distance that satisfies individual requirements. However, in the past, many designs have not provided adequate choice of viewing distances. For example, first row seating may be desirable for a hockey game and less desirable for viewing car racing or a movie.

The Board's regulatory assessment indicates that vertical dispersion could cost as much as $11 million for each ''large'' (50,000 seats) stadium or arena to provide vertical dispersion in uppermost decks. According to the regulatory assessment, ''in order to accommodate the additional dispersion required by this item, it is assumed that an upper deck concourse will be required for the facility. These large facilities generally have a lower deck, a middle deck (with suites and/or club level amenities), and an upper deck. The steep slopes used in the upper deck make it impractical to accommodate accessible routes with more than a minimal change in level up or down from the vomitory access point within the seating bowl. The dispersion requirement based on admission pricing, and the vertical dispersion requirement will generally require that a more substantial change in level be accommodated outside the seating bowl for the upper deck area. It is assumed that an additional concourse, of 50,000 square feet in area, will be used to provide access to the upper deck at an additional level.''

Question 39: Are there alternatives to constructing a secondary concourse that would provide vertical dispersion in upper decks of larger stadiums?

Question 40: The Board places significant importance on providing individuals with disabilities with selections from a variety of vantage points to enjoy performances and sporting events. Are there conditions where vertical separation between wheelchair spaces is not desirable? Is there a point where increased distance does not improve accessibility or contribute significantly to equal opportunity?

Question 41: Section 802.6.3 uses the term ''varying distances.'' Does the term ''varying distances'' provide sufficient guidance to allow designers and others to know when they have successfully met the criteria for compliance? If not, would it be preferable if a minimum separation between horizontal rows were specified?

The Board is considering a change in 802.6 that would be more responsive to concerns that have arisen about the lack of dispersion of wheelchair spaces in some assembly areas. Specifically, the Board is concerned that dispersion has been inadequate in smaller facilities such as stadium-style cinemas. While the provisions of 802.9 requiring lines of sight comparable to those provided other spectators must be satisfied in all cases, dispersion is required only when the seating capacity exceeds 300. The Board is considering requiring that dispersion be achieved where fewer than 300 seats are provided. The Board is seeking comment on this point.

Question 42: What would be the impact on small assembly facilities of a reduction in the number of seats triggering the dispersion requirement? The Board is particularly aware of the rapid pace of construction of stadium-style cinemas and seeks comment on whether a change in the dispersion requirement would adversely affect the construction cost of these facilities. What is the average number of seats provided per screen? Do cinemas provide more than one type of theater? For example, is it typical to provide a few larger theaters combined with a number of smaller theaters in a single facility? If so, what is the average size of smaller and larger theaters? Designers and operators of all types of assembly facilities are encouraged to comment on the impact of reducing the number of seats from 300 to 250, 200, or 150. If other trigger points are more reasonable, please provide recommendations and supporting data. People with disabilities are urged to provide comment on experiences that relate to the need, or lack of need, for greater dispersion in smaller assembly facilities. Is it possible that dispersion would be detrimental to the use and enjoyment of smaller facilities by people with disabilities? Common practice is to disperse wheelchair seats in a small space by providing wheelchair spaces at a cross aisle and in the rear of the assembly space. Would it be acceptable for up to one half of the wheelchair spaces to be provided in the last few rows of the assembly space for the purpose of providing vertical separation between wheelchair spaces?

Section 802.9 restates the requirement in ADAAG 4.33.3 that individuals seated in wheelchairs be provided with lines of sight comparable to those provided to other spectators. The Board is aware that design professionals have expressed some uncertainty about how to measure their compliance with this requirement. Therefore, the Board is proposing to amend the guidelines to include specific technical provisions to assist design professionals to determine if the sight lines provided for people who use wheelchair spaces are comparable to those provided to others. These technical provisions address sight lines over both seated and standing spectators. Adherence to these technical provisions will help ensure that people who use wheelchairs are provided with an equal opportunity to view the performance or event held in the assembly area.

Section 802.9.1 addresses the placement of wheelchair spaces in assembly areas where spectators are expected to remain seated during events. Section 802.9.1 provides that spectators seated in wheelchairs at events where people are expected to remain seated shall be provided with lines of sight to the performance area or playing field comparable to that provided to spectators in the seating area in closest proximity to the location of the wheelchair spaces, but not in the same row. Providing lines of sight for people who are seated in the wheelchair spaces that are comparable to nearest seats in the same seating area generally provides lines of sight for people with disabilities that are comparable to those provided to others in facilities such as stadiums or arenas where wheelchair

spaces are dispersed, because the dispersed locations provide the opportunity for people who use wheelchairs to select seats with a range of views of the performing area or playing field.

Section 802.9.2 addresses assembly areas where people are expected to stand at their seats during events. The sight line that is required in 802.9.2 is one that is comparable to the sight lines provided to standing spectators (over other standing spectators) who are located in the seating area closest to the wheelchair spaces, but not in the same row as the wheelchair spaces.

Stadium-style motion picture theaters comprise a type of assembly area that has become increasingly popular in the last several years. They provide the general public with sight lines to the screen that generally are far superior to those offered in traditional-style motion picture theaters. Stadium-style theaters provide improved viewing in one key way: they furnish an unobstructed view of the entire screen through the utilization of relatively high risers that furnish unobstructed viewing over the heads of the persons seated in the rows ahead. As stadium-style theaters are currently designed, patrons using wheelchair spaces are often relegated to a few rows of each auditorium, in the traditional sloped floor area near the screen. Due to the size and proximity of the screen, as well as other factors related to stadium-style design, patrons using wheelchair spaces are required to tilt their heads back at uncomfortable angles and to constantly move their heads from side to side to view the screen. They are afforded inferior lines of sight to the screen.

The Board is aware of the Department of Justice's enforcement of 4.33.3 with respect to assembly areas with stadium-style seating. DOJ has stated that 4.33.3 requires that wheelchair areas be an integral part of any fixed seating plan, and be provided so that people with disabilities have lines of sight and a choice of admission prices comparable to those for other members of the general public. As applied to stadium-style theaters (where most seats are placed on tiers or risers to enhance viewing), DOJ has asserted in attempting to settle particular cases that wheelchair seating locations must: (1) Be placed within the stadium-style section of the theater, rather than on a sloped floor or other area within the auditorium where tiers or risers have not been used to improve viewing angles; (2) provide viewing angles that are equivalent to or better than the viewing angles (including vertical, horizontal, and angle to the top of screen) provided by 50 percent of the seats in the auditorium, counting all seats of any type sold in that auditorium; and (3) provide a view of the screen, in terms of lack of obstruction (e.g., a clear view over the heads of other patrons), that is in the top 50 percent of all seats of any type sold in the auditorium. The Board is considering whether to include specific requirements in the final rule that are consistent with DOJ's interpretation of 4.33.3 to stadium-style movie theaters.

The Board also is considering whether to provide additional guidance on determining whether lines of sight are ''comparable'' in assembly areas, and specifically requests comment on the following issues.

Question 43: The current proposal specifies that wheelchair locations provide sight lines that are comparable to those provided to the seats nearest the wheelchair locations but not in the same row. The Board is considering whether in assembly areas large enough to require dispersion it would be appropriate to mandate that: spectators seated in wheelchair spaces have lines of sight that are equivalent to or better than the lines of sight provided to the majority of spectators seated in the same class or category of seats, and spectators seated in wheelchair spaces have lines of sight that are equivalent to or better than the lines of sight provided to spectators seated next to the wheelchair spaces. For example, a wheelchair space in the club seat section of a stadium would have to provide a line of sight equivalent to or better than the line of sight provided to the majority of spectators in club seats of the same price, as well as provide a line of sight equivalent to or better than that provided to spectators seated next to the wheelchair space. A wheelchair space in a box seat of a theater would have to provide a line of sight equivalent to or better than the line of sight provided to the majority of patrons in box seats of the same price, as well as provide a line of sight equivalent to or better than that provided to spectators seated next to the wheelchair space. A wheelchair space in the $30 per seat section of an arena, where spectators are expected to stand at times during the event, would have to provide a line of sight over standing spectators equivalent to or better than that provided to the majority of standing spectators in the $30 section of the arena, as well as provide a line of sight equivalent to or better than that provided to spectators seated next to the wheelchair space. The Board requests comment on the relative merit of the current proposal, as applied to assembly areas where dispersion is required, and the alternative requirement described in this question.

When the dispersion of wheelchair spaces is not required, (i.e., in small assembly areas) the placement of the wheelchair spaces in relation to other seating acquires greater significance because wheelchair users are not offered a choice of viewing angles. Therefore, in order to ensure equal opportunity for people who use wheelchairs in assembly areas in which dispersion is not required, it may be necessary for wheelchair spaces not only to provide lines of sight comparable to those provided to spectators seated in the same area, but also to provide lines of sight that are comparable to those provided for most of the other patrons in the assembly area. Consequently, the Board is considering specifying that wheelchair spaces in assembly areas, where dispersion is not required, must be located so that the lines of sight provided are comparable to (*i.e.*, equal to or better than) the lines of sight provided to the ''majority'' of the patrons in the assembly area.

Question 44: Should ADAAG specify that wheelchair spaces in assembly areas, where wheelchair spaces generally are not dispersed shall provide unobstructed lines of sight that provide a line of sight equivalent to or better than the line of sight provided for the majority of event spectators?

803 Dressing, Fitting, and Locker Rooms

This section revises requirements for dressing and fitting rooms in ADAAG 4.35 and also specifically addresses locker rooms as well. Section 803.2 requires wheelchair turning space in accessible rooms. A portion of this space (6 inches maximum) can extend under partitions or openings without doors that provide toe clearance at least 9 inches high. A provision in ADAAG 4.35.2 that exempts rooms with curtained openings from the requirement for turning space has been removed so that a consistent level of access is provided in all types of dressing and fitting rooms.

Benches are required to comply with criteria in section 903, which contains revised specifications for benches (see discussion below). Where mirrors are provided, ADAAG 4.35.5 requires that accessible rooms have full-length mirrors and provides minimum dimensions. As recommended by the advisory committee, this requirement has been removed because of the wide variation of room types covered by this section. In some cases, such as a large locker room, compliance with the ADAAG mirror specifications will not

ensure that a full-length mirror is usable from an accessible bench. Consistent with requirements for toilet and bathing facilities, criteria for accessible coat hooks and fold-down shelves have been added in section 803.5 and apply where such elements are provided.

804 Sinks, Kitchens, Kitchenettes, and Wet Bars

This section derives from requirements for transient lodging facilities in ADAAG 9.2.2(7). However, under revised scoping in section 212, these criteria are applicable not only to transient lodging guest rooms but to other accessible spaces as well, such as employee break rooms. These requirements are consistent with ADAAG except that a forward approach to sinks is required whereas ADAAG 9.2.2(7) permits a parallel approach to sinks at guest room kitchens or kitchenettes. This revision allows a consistent level of access at sinks, since accessible sinks in other types of spaces are required to have a forward approach.

805 Medical Care Facility Patient or Resident Sleeping Rooms

This section is based on requirements for patient bedrooms in ADAAG 6.3. Clarification is added in section 805.2 that required wheelchair turning space cannot extend beneath beds. Requirements for clear floor space on each side of beds has been revised to specify a parallel approach according to section 305, which is substantively similar to the requirement in ADAAG 6.3(3) for clear floor space at least 36 inches wide alongside beds. The advisory committee recommended a provision for accessible windows. The Board has relocated this requirement to section 230 so that it applies to other facility types as well. An exception in ADAAG 6.3(1) for entry doors to acute care hospital bedrooms has been relocated to scoping requirements for doors in 404.1 (Tables 404.2.4.1 and 2).

806 Transient Lodging Guest Rooms

Requirements for accessible transient lodging guest rooms in ADAAG 9.2.2 and 9.3 are provided in this section. In accordance with the new format of the revised guidelines, scoping provisions contained in ADAAG for special occupancy sections have been relocated to Chapter 2.

Section 806.2 addresses accessible guest rooms. Scoping for accessible routes, doors and doorways, storage, controls, and parking in ADAAG 9.2.2(2) through (6) are covered by general scoping provisions for such elements in Chapter 2. ADAAG 9.2.2(6) provides an exception for access to exterior spaces that allows a higher threshold or change in level where necessary ''to protect the integrity of the unit from wind/water damage.'' This exception, which requires alternate provisions of access, has been removed because the advisory committee was convinced that design solutions are available that allow access while preventing wind or water damage. Other revisions include:

- Clarification that clear floor space on each side of beds for a parallel approach according to section 305 is required, which is substantively similar to the requirement in ADAAG 9.2.2(1) for clear floor space at least 36 inches wide alongside beds (806.2.3);
- A new provision added by the Board that requires accessible vanity tops at lavatories in accessible guest rooms if vanity tops are provided in other guest rooms (806.2.4.1);
- Sinks in kitchens and kitchenettes are required to provide a forward approach (804.3 as referenced by 806.2.5); and
- Clarification that wheelchair turning space is required and that beds cannot overlap this space (806.2.6).

The advisory committee recommended provisions for accessible windows in transient lodging facilities as well. The Board has relocated this requirement to section 230 so as to be applicable to other facility types as well.

Section 806.3 covers accessible communication features in guest rooms. Like ADAAG 9.3, this section requires visual alarms and notification devices. A provision in ADAAG 9.3.2 recognizes the provision of outlets and wiring for portable devices as an ''equivalent facilitation.'' This provision, like others concerning equivalent facilitation have been removed as information that is advisory. Further, revisions to requirements for visual alarms in guest rooms in section 702.3.6 effectively prohibit the use of most portable alarms. Use of portable visual notification devices for incoming telephone calls and door knocks or bells, while not specifically recognized, are not specifically prohibited.

ADAAG 9.4 requires that doors and doorways to inaccessible guest rooms provide a 32 inch minimum clearance. This requirement has been relocated to scoping for transient lodging guest rooms in section 224.1. ADAAG 9.5 has specific provisions for homeless shelters, halfway houses, transient group homes, and other social service establishments. In buildings not required to have elevators, an exception in ADAAG 9.5.1 states that common use amenities are not required to be accessible on inaccessible floors as long as one of each type of amenity is provided in common use areas on accessible floors. ADAAG 9.5.2 permits allowances for existing homeless shelters that are altered. The advisory committee recommended that these provisions be removed because special treatment of these types of facilities was not considered warranted.

807 Holding Cells and Housing Cells or Rooms

This section provides requirements for cells or rooms required to be accessible in detention or correctional facilities or judicial facilities. The specifications are consistent with ADAAG 11.2.3 and 12.5. Consistent with provisions for medical care facilities and transient lodging, clarification has been added in section 807.2.1 that beds cannot overlap required wheelchair turning space. Benches, where provided, are required to comply with section 903 and visual alarms are subject to requirements in 702.3.6. Specifications for these elements have been revised for benches, as discussed at section 903, and for fire alarm systems, as discussed at section 702.

Chapter 9: Built-In Furnishings and Equipment

This chapter covers built-in furnishings and equipment. Provisions for seating at tables and counters, check-out aisles, and storage areas are provided. These requirements apply to a variety of facilities and effectively replace those in ADAAG 8 specific to library reading and study areas, check-out areas, card catalogs, magazine displays, and stacks.

902 Dining and Work Surfaces

This section is consistent with ADAAG 4.32 in providing specifications for seating at dining and work surfaces, including dining counters covered by ADAAG 5.2. Clear floor space is required for a forward approach complying with section 306, which specifies clearances for knees and toes. (ADAAG 4.32.3 only specifies a knee clearance for the full depth for the clear floor space). Additionally, section 306 is different from ADAAG by increasing the permitted overlap of clear floor space from 19 to 25 inches.

903 Benches

Requirements for benches derive from specifications for dressing and fitting rooms in ADAAG 4.35.4. Section 903.2 clarifies that the required clear floor space is to be positioned for a parallel approach ''to an end of the bench seat.'' Dimensions for the bench have been

revised to provide greater flexibility. The depth has been changed from 24 inches absolute to a range of 20 to 24 inches; the minimum width has been reduced from 48 to 42 inches. The advisory committee considered these changes helpful in allowing more flexibility in the size of benches without reducing access. The Board has added a requirement that back support be provided that extends vertically from a point no more than 2 inches above the bench to a height of at least 18 inches above the bench and that extends horizontally at least 42 inches. This requirement replaces the ADAAG requirement that the bench be installed on the wall.

904 Sales and Service Counters

This section covers check-out aisles, point of sales and service counters, and food service lines. In section 904.2, clarification has been added that all portions of counters required to be accessible shall be adjacent to an accessible walking surface. Section 904.3 and 904.4 are consistent with requirements for check-out aisles and sales and service counters in ADAAG 7.2 and 7.3. Section 904.4 differs from ADAAG in that it does not distinguish between counters with cash registers and those without. Provisions in ADAAG 7.2(2) that recognize alternatives for counters without cash registers (access to auxiliary counters, folding shelves, etc.,) have not been included. ADAAG requirements basically presume a parallel approach to sales and service counters. The Board has included criteria for a forward approach as an alternative to a parallel approach. The Board also has added an exception for alterations where compliance would result in a reduction of the number of existing counters at work stations or existing adjacent mail boxes. In this case, an accessible counter at least 24 inches in length (instead of 36 inches for a parallel approach and 30 inches for a forward approach) is permitted.

Section 904.5 covers food service lines and is consistent with requirements in ADAAG 5.5. A minimum height (28 inches) for tray slides has been added. This specification derives from the ICC/ANSI A117.1 standard. Section 904.6 requires that where counter or teller windows have security glazing to separate personnel from the public, at least one of each type must provide a method to facilitate voice communication. These specifications are based on those in ADAAG 7.2(3) as amended for State and local government facilities. However, in the revised guidelines, this requirement applies to all types of facilities where such glazing is provided at sales or service counters.

905 Storage

Requirements in this section are substantively the same as those for storage in ADAAG 4.25 except for one change. ADAAG requires that storage hardware meet operating characteristics for controls. Section 905.4 requires compliance with all criteria for operable parts in section 309, which includes not only operating characteristics but clear floor space and height as well.

Chapter 10: Transportation Facilities

As in current ADAAG, chapter 10 is organized to cover one type of occupancy because there are a variety of requirements unique to transportation facilities. This chapter covers bus stops and terminals, rail facilities and stations, and airports.

1002 Bus Stops and Terminals

This section is consistent with requirements in ADAAG 10.2 and no substantive changes have been made.

1003 Facilities and Stations

Provisions in ADAAG 10.3 that apply to accessible routes have been removed because scoping for accessible routes in Chapter 2 (section 206) applies to transit facilities as well. This pertains to requirements in 10.3.1(1), (3), (7), (10) and (19). ADAAG 10.3 also covers ''intercity bus stations.'' This reference has been removed from 1003 because virtually all the remaining provisions are specific to rail stations. Intercity bus stations are considered adequately covered by the scoping and technical requirements of the other chapters. In addition, the following requirements have been removed:

- Minimum illumination levels at signage and uniform levels along routes (ADAAG 10.3.1(11)) for consistency since illumination levels in other facility types are not addressed;
- Placement of clocks in ''uniform locations throughout the facility or system'' (ADAAG 10.3.1(15)) since this provision lacks clarity for purposes of compliance;
- Criteria for escalator treads, including marking strips (ADAAG 10.3.1(16)) because they are more applicable to general safety than to accessibility;
- Transparent panels in elevator cars (ADAAG 10.3.1(17)) since this pertains to public security for everyone, not specifically to accessibility for people with disabilities;
- Specifications for counters (ADAAG 10.3.1(18)) because general scoping for sales and service counters in section 227 already covers them; and
- References to alterations to areas containing a primary function (ADAAG 10.3.3) which the Board considers unnecessary since this is addressed generally for alterations in section 202.

Section 1003.2.2 requires signs to comply with section 703, which is considerably different from signage requirements in ADAAG 4.30 as discussed above. Section 1003.2.2.3 addresses informational signs and is consistent with ADAAG 10.3.1(6). However, an exception has been added that allows smaller characters where space for signs is limited. This revision was recommended by the advisory committee.

Section 1003.2.3 addresses fare vending machines and gates. Fare vending machines are required to comply with section 707, which has been extensively updated as discussed above. ADAAG 10.3.1(7) provides criteria for gates at fare collection devices and requires compliance with the requirements for doors and also specifies that those that must be pushed open by people using wheelchairs must have a smooth continuous surface from 2 inches above the floor to 27 inches above the floor. The Board has retained the requirement for compliance with specifications for doors in section 404 but has removed the dimension criteria for push gates, as recommended by the advisory committee.

Section 1003.2.4 requires detectable warnings at platform edges bordering drop-offs. A requirement for detectable warnings at track crossings in ADAAG 10.3.1(13) was removed at the advisory committee's recommendation.

The Board has included several changes to this chapter. Section 1003.2.5 addresses the coordination in height between platform and vehicle floors. This is similar to ADAAG 10.3.1(9) except that clarification has been added that the vertical difference applies to ''all'' passenger car load conditions. ''Slow moving'' people mover systems as addressed in this provision have been defined as those with a maximum speed of 20 miles per hour, consistent with Board and Department of Transportation interpretations. Section 1003.2.6 requires TTYs at public pay telephones at transit facility entrances. The number of pay telephones at an entrance which triggers installation of a TTY has been reduced from four (which ADAAG 10.3.1(12) specifies) to one. Section 1003.2.11 requires accessible direct connections to other facilities. This is consistent with ADAAG 10.3.1(3) but has been clarified that the direct

connection, as opposed to a circulation path to another entrance, is required to be accessible, consistent with the original intent of ADAAG.

Communication

Section 1003.2.8 and 1004.3 require that where public address systems are provided to convey information to the public, a means of conveying the same or equivalent information to persons who are deaf or hard of hearing be provided. Like ADAAG 10.3.1(14) and 10.4.1(6), these provisions apply only to terminals, stations, airports and other transportation facilities. In addition, these provisions do not explicitly require electronic means of visible communication, even when public address systems are intended to be heard in remote areas of a facility. These provisions do not apply to messages that are not intended to be public, such as employee paging.

Question 45: The Board seeks comment on whether additional provisions for an equivalent means of communication should be applied to facilities other than transportation facilities in the final rule. For example, captioning can be associated with electronic scoreboards in stadiums, public address systems at airports, and can convey announcements in other facilities that currently provide communication systems that are inaccessible to people who are deaf or hard of hearing. In addition, the Board is considering establishing more specific criteria for equivalent visual communication. For example, the Board may require that electronic signs be visible in the areas of the facility where public address systems are audible. To accomplish this, the Board may establish technical requirements for visible signs in the final rule. Commenters are requested to provide information, including technical specifications, regarding the various means of providing equivalent information that have been employed in all types of facilities, including transportation facilities and airports. What methods provide the most equivalent visual communication? Are there ''low tech'' methods that are equally effective for certain types of facilities given the customary circulation patterns or other features of the facility?

The present rulemaking proposes to amend only the ADA (36 CFR Part 1191) and the ABA (36 CFR Part 1190) accessibility guidelines however, the Board is interested in obtaining certain key information that may assist in a future rulemaking to amend the Board's transportation vehicle guidelines (36 CFR 1192). Specifically, the Board is interested in technical information, including specifications for making train announcements, including station announcements and emergency announcements accessible to people who are deaf or hard of hearing.

Question 46: What means are available for providing visual train announcements when audible announcements are provided?

Platform Height

Exception 2 to section 1003.2.5 Rail-to-Platform Height would permit the use of mini-high platforms, car-borne or platform-mounted lifts, ramps or bridge plates, or manually deployed devices where it is not operationally or structurally feasible to meet the plus-or-minus ⅝ inch or 1½ inch vertical, or 3 inch horizontal platform-to-car gap requirements. For commuter and intercity rail, ''not operationally feasible'' usually means the track is also used by freight trains and the need to allow the passage of oversized freight precludes a high platform. The American Railway Engineering and Maintenance of Way Association (AREMWA) recommends a new platform height of 8 inches above top-of-rail. This height allows for freight passage while reducing the height of the first step of a rail car above the platform. Often a potable step stool is used to make up the height difference between a lower platform and the first step. Negotiating such a step can be difficult for ambulatory passengers, especially since handrails are usually not available. Also, requiring the 8-inch height would reduce the vertical travel distance for a lift.

Question 47: Should the final rule require that new platforms for commuter or intercity rail stations have a height of 8 inches above top-of-rail?

1004 Airports

Section 1004 provides requirements for airports consistent with ADAAG 10.4. As with requirements for rail stations in 1003, provisions for accessible routes have been removed as unnecessary due to general scoping requirements in section 206. This pertains to requirements in ADAAG 10.4(1), (2), (3), and (5). In addition, a requirement for placement of clocks in uniform locations in ADAAG 10.4(7) has been removed.

Chapter 11: Residential Facilities

The Board has included requirements for accessible dwelling units in the revised guidelines. The technical requirements of this chapter derive from updated guidelines for residential facilities contained in the ICC/ANSI A117.1–1998 standard. These requirements represent an addition to ADAAG, which currently does not address such facilities. Under the ADA, the Department of Justice determines the application of the guidelines to residential facilities. This chapter also serves to update requirements for dwelling units in the minimum guidelines for federally funded facilities upon which UFAS is based.

Section 1102 covers accessible dwelling units and provides requirements for entrances, elements of accessible routes, private residence elevators, laundry equipment, toilet and bathing facilities, kitchens, windows, and storage facilities. Substantive changes from the ICC/ANSI A117.1 standard include:

- Removal of an exception for exterior sliding doors that would permit a maximum '' inch threshold instead of the ⅓ inch maximum otherwise specified (1102.5);
- Addition of a requirement that private residence elevators meet the ASME/ANSI A17.1 safety standard (1102.7);
- Revision of inside elevator car dimensions to meet the clear floor space requirements in section 305 (1102.7.7);
- Addition of a requirement that, where removable base cabinetry is used below lavatories and kitchen work surfaces and sinks, the sides and back wall be finished (1102.11.3, 1102.12.3.1, 1102.12.4.1); and
- Addition of specifications for bottom-hinged ovens (1102.12.6.5.2).

Section 1103 provides requirements for dwelling units with accessible communication features. Specifications in this section cover smoke detectors, fire alarms systems and visual appliances, doorbells, and entry communication systems. The Board has added requirements in section 1103.5 that doorbells provide a visible signal and that these visible notification devices, where located in sleeping areas, have a deactivation switch.

Some designers or building owners may elect to provide visual alarms in more than one room. However, the visual signal is required to be provided in only one room so that building alarms are visible from within the dwelling unit. Once wiring is provided for a single visual signal in the dwelling unit, additional visual signals can be connected to the system when needed by an occupant.

Regulatory Process Matters

Executive Order 12866: Regulatory Planning and Review Congressional Review Act

This proposed rule is an economically significant regulatory action under Executive Order 12866 and has been reviewed by the Office of Management and Budget. The proposed rule is also a major rule under the Congressional Review Act. The Board has prepared a regulatory assessment for the proposed rule. The regulatory assessment has been placed in the docket and is available for public inspection. The regulatory assessment is also available on the Board's Internet site (http://www.access-board.gov/ada-aba/regimpact.htm).

The proposed rule revises and updates the accessibility guidelines for the Americans with Disabilities Act and the Architectural Barriers Act, and will ensure greater consistency and uniformity in the accessible design, construction, and alteration of buildings and facilities by the private sector, State and local governments, and the Federal government. The proposed rule is based largely on the recommendations of the ADAAG Review Advisory Committee, which consisted of representatives of the design and construction industry, the building code community, State and local governments, and people with disabilities.

The regulatory assessment examines the impact of sections of the proposed rule that establish new requirements. Requirements currently contained in existing guidelines and regulations have not been considered in the regulatory assessment. The Board used several sources as a baseline to determine the impact of sections of the proposed rule that establish new requirements. These include the American National Standard A117.1–1998 for Accessible and Usable Buildings and Facilities, a consensus standard referenced by the model codes; the new International Building Code being developed by the International Code Council which is expected to widely be adopted by State and local governments; and industry practice. The Board has worked closely with the groups responsible for developing the A117.1–1998 standard and the International Building Code to harmonize the Board's guidelines and those codes and standards. As a result, the proposed rule, the A117.1–1998 standard, and the International Building Code contain very similar provisions. For those sections of the proposed rule that are similar to the A117.1–1998 standard and the International Building Code, the Board has assumed no impact resulting from the proposed rule. Where the proposed rule differs from the A117.1–1998 standard, the International Building Code, and industry practice, the Board examined sections that are likely to have a measurable impact on the design and construction of buildings and facilities. Sections that are likely to have no or minimal impact were not included in the regulatory assessment. In all, 13 separate building elements or items were examined in the regulatory assessment. One of the items, accessible vending equipment, was determined to have no cost impact on further examination and is not included in the data summarized below.

Table 1 lists the sections of the proposed rule that are expected to have an impact, the accessible elements required, and the unit cost for each element. Where an element is expected to result in an increase in space, the amount of space increase or the average cost for a square foot of space is listed.

TABLE 1.—BUILDING ELEMENT COSTS: NEW CONSTRUCTION

Section	Accessible Element	Unit Cost
203.2	Employee Work Areas—Visual Alarms	$270
217.4.2.1, F217.4.2, F217.4.3	TTYs	1,998
231.1, 708.1, 708.2	Two-Way Communication Systems—Visual Signals	1,077
234.1.3, 1103.1, 1103.5, 1103.5.1	Dwelling Units: Communication Features—Doorbell with Visual Signal	250
234.1.3, 1103.1, 1103.6	Dwelling Units: Communication Features—TTY Capability at Site/Building/Floor Entry	264
230.1	Accessible Operable Windows—"Add-On" Hardware	364
221.5	Assembly Areas: "Equivalent" Vertical Access—3–Stop Hydraulic Elevator	61,794
802.6	Assembly Areas: Dispersion of Wheelchair Spaces/Designated Aisle Seats—Platform Lifts	14,213
221.3, 802.7	Assembly Areas: Wheelchair Space Companion Seats—6 Square Ft. Area Increase and Anchorings.	1,315
221.4.1, 221.4.2	Assembly Areas: Designated Aisle Seats on Accessible Route—Average Cost Square Foot of Assembly Facility.	204
224.4, 806.3, 806.3.1, 702.3.6	Transient Lodging Guest Rooms—Visual Alarms	293
224.2, 806.3, 806.3.2, 704.3	Transient Lodging Guest Rooms—Doorbell with Visual Signal	263

Table 2 summarizes data for the building types that are expected to be affected by the sections in Table 1. Four building types are included: office building, hotel, multi-family dwelling unit, and stadium/arena. Stadium/arena is further examined by the size of the facility: large, medium, and small. With the exception of the large stadium/arena, the total cost for the accessible elements as a percentage of total construction costs is one-half percent or less for the various building types. Multiplex cinemas were considered also but were determined to have no cost impact.

TABLE 2.—BUILDING TYPE COSTS: NEW CONSTRUCTION

Building type size, construction cost	Accessible elements		Total cost for accessible elements percentage of construction cost
	Number	Cost	
Office Building, 200,000 sq. ft., $25,000,000.	Employee Work Areas—Visual Alarm Appliances, 250	$65,375	$66,452
	Two-Way Communication Systems, 1	1,077	0.27%

TABLE 2.—BUILDING TYPE COSTS: NEW CONSTRUCTION—Continued

Building type size, construction cost	Accessible elements		Total cost for accessible elements percentage of construction cost
	Number	Cost	
Hotel, 150 guest rooms, $8,000,000.	Guest Rooms—Visual Alarms 63	18,459	$35,028
	Guest Rooms—Notification Devices, 63	16,569	0.44%
Multi-Family Dwelling Unit, 800–1,000 sq. ft., $100,000.	Dwelling Unit—Doorbell with Visual Signals, 1	250	$514
	Dwelling Unit—TTY Capability on Site/Building/Floor Entry System 1	264	0.51%
Large Stadium/Arena, 50,000 seats, $350,000,000.	''Equivalent'' Vertical Access, 3 Elevators	185,382	$11,846,702
	Dispersion of Wheelchair Spaces/Designated Aisle Seats, 50,000 sq. ft., mezzanine in upper deck.	11,000,000	3.4%
	Wheelchair Space Companion Seats, 501	661,320	
	Designated Aisle Seats in Accessible Route, No impact assumed.		
Medium Stadium/Arena, 20,000 seats, $200,000,000.	''Equivalent'' Vertical Access, 2 Elevators	123,558	$751,760
	Dispersion of Wheelchair Spaces/Designated Aisle Seats, 4 Lifts	$56,852	0.38%
	Wheelchair Space Companion Seats, 201	265,320	
	Designated Aisle Seats on Accessible Route, 1,500 sq. ft.	306,000	
Small Stadium/Arena, 11,000 seats $50,000,000.	''Equivalent'' Vertical Access, 1 Elevator	61,794	$236,740
	Dispersion of Wheelchair Spaces/Designated Aisle Seats, 2 Lifts	28,426	0.47%
	Wheelchair Space Companion Seats, 111	146,520	
	Designated Aisle Seats on Accessible Route, No impact assumed.		

As shown in Table 2, the regulatory assessment sampled a variety of types of assembly facilities. However, the regulatory assessment did not include facilities that have between 300 and 11,000 seats. The Board seeks information on what types of facilities have more than 300 and fewer than 11,000 seats. In addition, how many of each type of facility is constructed each year?

None of the building types examined include TTYs or operable windows because either these elements typically are not provided in the building types; or if provided, these elements would be covered by the existing guidelines, the A 117.1–1998 standard, or the International Building Code. For instance under the existing guidelines (ADAAG 4.1.3(17)(c)(i)), public facilities are required to provide a TTY if an interior public pay phone is provided in a public use area of a building. Under the proposed rule, public facilities would have to provide a TTY on a floor when a public pay phone is provided on a floor. If public pay phones are provided in public facilities, it is assumed that they are usually located in the lobby area on the main floor and would be covered by the existing guidelines. The number of new facilities that would not otherwise be covered by the existing guidelines, the A 117.1–1998 standard, and the International Building Code and would have to provide TTYs under the proposed rule is assumed to be small. It is estimated that 50 additional TTYs would be provided annually at an aggregate cost of $99,900. The Board seeks comment on this estimate.

Table 3 presents the annual costs of the accessible elements for the various building types examined. The total costs are estimated to be $88,360,726. These costs are for new construction only. Because of the widely varying conditions in existing buildings and facilities, it is not feasible to estimate the impact of the proposed rule where alterations occur. The extent of the impact of the proposed rule on an existing building or facility undergoing alteration will depend on the existing condition of the building with regard to accessibility, the extent of the work planned, and the technical feasability of compliance.

TABLE 3.—ANNUAL COSTS FOR BUILDING TYPES: NEW CONSTRUCTION

Building type and number of new facilities	Costs for accessible elements
Office Building, 250	$16,397,600
Hotel, 890	31,174,920
Multi-Family Dwelling Unit, 800	305,600
Large Stadium/Arena, 3	35,540,106
Medium Stadium/Arena, 5	3,758,800
Small Stadium/Arena, 5	1,183,700
All Building Types	88,360,726

The Board has requested Federal agencies to review the impact of the proposed requirements in the Architectural Barriers Act guidelines on their leased facilities. The General Services Administration and other agencies report that they do not expect an impact on their leased facilities. The United States Postal Service (USPS) reports that it leases approximately 27,000 facilities, and of these approximately 3,000 new leases are negotiated annually for previously occupied facilities. USPS reports that it will have to provide van accessible parking spaces and accessible customer service counters, and upgrade its alarm systems when new leases are negotiated for previously occupied facilities. USPS estimates that these items will cost $10,000 per facility, or $30,000,000 annually.

The proposed rule will ensure that buildings and facilities covered by the Americans With Disabilities Act and the Architectural Barriers Act are readily accessible to and usable by people with disabilities and provide them equal opportunity to participate in and use the activities, goods, benefits, programs, and services provided therein. The proposed rule should also facilitate the certification of State and local building codes by the Attorney General. Under the Americans With Disabilities Act, State and local governments may request the Attorney General to certify State and local building codes where those codes establish accessibility requirements that meet or exceed the Federal requirements. As discussed above, the Board has worked with

groups responsible for the A117.1–1998 standard and International Building Code to harmonize the guidelines and those codes and standards, which are expected to be widely adopted by State and local governments. As a result, it should be easier for State and local governments to have the Attorney General certify their building codes in the future. Architects, designers, owners, and other persons covered by the Americans With Disabilities Act also will find it easier to comply with these laws if State and local building codes are certified. Instead of having to review building and facility designs for compliance with both Federal requirements and State and local government requirements, persons can be reasonably assured that compliance with State and local requirements will satisfy Federal requirements. The Americans With Disabilities Act specifically provides that in any enforcement action, certification of a State and local building code by the Attorney General is rebuttable evidence that the code meets or exceeds Federal requirements. The proposed rule is expected to result in a greater degree of compliance with Federal requirements.

Executive Order 13132: Federalism

This proposed rule is issued to implement the Americans With Disabilities Act and the Architectural Barriers Act and will ensure that buildings and facilities covered by those laws are readily accessible to and usable by people with disabilities. Ensuring the civil rights of people with disabilities has been recognized as a responsibility of the Federal government. The Americans With Disabilities Act was enacted to provide a clear and comprehensive national mandate for the elimination of discrimination against people with disabilities. Issuance of the proposed rule is consistent with the fundamental federalism principles set forth in Executive Order 13132. The Board is required by Federal statute to develop and maintain accessibility guidelines for building and facilities to serve as a basis for uniform accessibility standards adopted by other Federal agencies. In updating and revising the guidelines, the Board has utilized an advisory committee which represented the design and construction industry, the building code community, State and local governments, and people with disabilities. In addition to requesting public comments on the proposed rule, the Board will hold public hearings to give all interested persons ample opportunity to share their views regarding the rule with the Board.

Unfunded Mandates Reform Act

The Unfunded Mandates Reform Act does not apply to proposed or final rules that enforce constitutional rights of individuals or enforce any statutory rights that prohibit discrimination on the basis of race, color, sex, national origin, age, handicap, or disability. Since the proposed rule is issued under the authority of the Americans With Disabilities Act and the Architectural Barriers Act, an assessment of the rule's affects on State, local, and tribal governments, and the private sector is not required by the Unfunded Mandates Reform Act.

Regulatory Flexibility Act

The Chair, on behalf of the Board, certifies pursuant to 5 U.S.C. 605(b) that the proposed rule will not have a significant economic impact on a substantial number of small entities. As discussed above under Executive Order 12866 and the Congressional Review Act, the Board has assessed the impact of the proposed rule on various building types. The proposed rule is expected to have an impact of one-half percent or less on new construction costs for the various buildings and facilities, with the exception of a large stadium/arena which does not qualify as a small entity. These impacts are described more fully in the regulatory analyses prepared for the proposed rule. Based on this, the Board expects that the proposed rule will have an economic impact, but not a significant economic impact, on small entities and therefore a regulatory flexibility analysis has not been prepared. Nonetheless, the Board is interested in the potential impacts of the proposed rule on small entities and welcomes additional comments during the rulemaking process on issues related to such impacts.

List of Subjects

36 CFR Part 1190

Buildings and facilities, Individuals with disabilities.

36 CFR Part 1191

Buildings and facilities, Civil rights, Individuals with disabilities, Transportation.

June I. Kailes,

Chair, Architectural and Transportation Barriers Compliance Board.

For the reasons stated in the preamble, under the authority of 29 U.S.C. 792(b)(3) and 42 U.S.C. 12204, the Architectural and Transportation Barriers Compliance Board proposes to amend chapter XI of Title 36 of the Code of Federal Regulations as follows:

PART 1190—[REMOVED]

1. Part 1190 is removed.

2. Part 1191 is revised to read as follows:

PART 1191—AMERICANS WITH DISABILITIES ACT (ADA) ACCESSIBILITY GUIDELINES FOR BUILDINGS AND FACILITIES; ARCHITECTURAL BARRIERS ACT (ABA) ACCESSIBILITY GUIDELINES

Sec.
1191.1 Accessibility guidelines.
Appendix A to Part 1191—Americans With Disabilities Act: Scoping
Appendix B to Part 1191—Architectural Barriers Act: Scoping
Appendix C to Part 1191—Technical

Authority: 29 U.S.C. 792(b)(3); 42 U.S.C. 12204.

§ 1191.1 Accessibility guidelines.

(a) The accessibility guidelines for buildings and facilities covered by the Americans with Disabilities Act are set forth in Appendices A and C to this part. The guidelines serve as the basis for accessibility standards adopted by the Department of Justice and the Department of Transportation under the Americans with Disabilities Act.

(b) The accessibility guidelines for buildings and facilities covered by the Architectural Barriers Act are set forth in Appendices B and C to this part. The guidelines serve as the basis for accessibility standards adopted by the General Services Administration, the Department of Defense, the Department of Housing and Urban Development, and the United States Postal Service under the Architectural Barriers Act.

BILLING CODE 8150–01–P

TABLE OF CONTENTS

CHAPTER 1: APPLICATION AND ADMINISTRATION 3
101 Purpose 3
102 Provisions for Adults and Children 3
103 Equivalent Facilitation 3
104 Conventions 4
105 Referenced Standards 5
106 Definitions 6

CHAPTER 2: SCOPING REQUIREMENTS 11
201 Application 11
202 Existing Buildings and Facilities 11
203 General Exceptions 12
204 Protruding Objects 13
205 Operable Parts 13
206 Accessible Routes 13
207 Accessible Means of Egress 19
208 Parking Spaces 19
209 Passenger Loading Zones 22
210 Stairways 22
211 Drinking Fountains and Water Coolers 22
212 Sinks, Kitchens, Kitchenettes, and Wet Bars 22
213 Toilet and Bathing Facilities 23
214 Laundry Equipment 25
215 Emergency Alarm Systems 25
216 Signs 25
217 Telephones 26
218 Transportation Facilities 29
219 Assistive Listening Systems 29
220 Automatic Teller Machines and Fare Machines 30
221 Assembly Seating 30
222 Dressing, Fitting, and Locker Rooms 31
223 Medical Care Facility Patient or Resident Sleeping Rooms 31
224 Transient Lodging Guest Rooms 32
225 Self-Service Storage Facilities 35
226 Dining Surfaces and Work Surfaces 35
227 Sales and Service Counters 36
228 Storage 37
229 Depositories, Vending Machines, Change Machines, and Mail Boxes 38
230 Windows 38
231 Two-Way Communication Systems 38

232 Judicial Facilities 38
233 Detention and Correctional Facilities 39
234 Accessible Residential Facilities 41

CHAPTER 1: APPLICATION AND ADMINISTRATION

101 Purpose

This part provides scoping and technical requirements for accessibility to *sites*, *facilities*, *buildings*, and *elements* by individuals with disabilities. These requirements are to be applied during the design, construction, and *alteration* of *sites*, *facilities*, *buildings*, and *elements* to the extent required by regulations issued by Federal agencies under the Americans with Disabilities Act of 1990.

102 Provisions for Adults and Children

The technical requirements in this part are based on adult dimensions and anthropometrics. This part also contains technical requirements based on children's dimensions and anthropometrics for drinking fountains, water closets, toilet compartments, lavatories and sinks, dining surfaces, and work surfaces.

103 Equivalent Facilitation

Nothing in this part is intended to prevent the use of designs or technologies as alternatives to those prescribed in this part provided they result in substantially equivalent or greater accessibility and usability.

Advisory 103
The responsibility for demonstrating equivalent facilitation in the event of a challenge rests with the covered entity. With the exception of transit *facilities* which are covered by regulations issued by the Department of Transportation, there is no process for certifying that an alternative design provides equivalent facilitation.

104 Conventions

Figure 104

Convention	Description
36 / 915	dimension showing English units (in inches unless otherwise specified) above the line and SI units (in millimeters unless otherwise specified) below the line
6 / 150	dimension for small measurements
33-36 / 840-915	dimension showing a range with minimum - maximum
min	minimum
max	maximum
>	greater than
<	less than
	boundary of clear floor space or maneuvering clearance
℄	centerline
	a permitted element or its extension
	direction of travel or approach
	a wall, floor, ceiling or other element cut in section or plan
	an element in elevation or plan
	location zone of element, control or feature
italics	defined term

104.1 Dimensions. Dimensions that are not stated as "maximum" or "minimum" are absolute.

104.1.1 Construction and Manufacturing Tolerances. All dimensions are subject to conventional industry tolerances.

Advisory 104.1.1
Conventional industry tolerances recognized by this provision include those for field conditions and those that may be a necessary consequence of a particular manufacturing process. Recognized tolerances are not intended to apply to design work. It is good practice when specifying dimensions to avoid stating in the specification a tolerance (i.e., if this document requires "32 inches" avoid specifying "32 inches plus or minus X inches"). This could lead some to mistakenly assume that a tolerance allowed by this document can be applied in addition to the specified tolerance. This "double-dipping" or compounding of tolerances would not achieve the intended requirement. Where the requirement itself allows a range of dimensions, such as in section 604.4 where the height of water closets must be 17 inches minimum to 19 inches maximum measured to the top of the toilet seat, "17 inches minus X inches minimum to 19 inches plus X inches maximum" is how the provision for tolerance is intended to apply. As stated previously though, it is good practice to simply specify the dimensions as "17 inches to 19 inches". Information on specific tolerances may be available from industry or trade organizations, code groups and *building* officials, and published references.

104.2 Calculation of Percentages. Where the required number of *accessible elements* or *facilities* to be provided is determined by calculations of ratios or percentages and remainders or fractions result, the next greater whole number of such *elements* or *facilities* shall be provided. Where the determination of the required size or dimension of an *element* or *facility* involves ratios or percentages, rounding down for values less than one half shall be permitted.

105 Referenced Standards

105.1 General. The standards referenced in this part and listed in 105.2 shall be considered part of the requirements of this part to the prescribed extent of each such reference. References to standards within the technical and scoping requirements shall apply to the specific edition of the reference standard listed in 105.2. Where differences occur between provisions of this part and referenced standards, the provisions of this part shall apply.

Advisory 105.1
In addition to the requirements of this document, there is an obligation to meet the requirements of any referenced standards unless there is a conflict with the guidelines. It is important to use the specific edition of the referenced standards.

105.2 Referenced Standards.

105.2.1 Installation, Maintenance, and Use of Protective Signaling Systems. NFPA 72-1996.

105.2.2 Power-Operated Pedestrian Doors. ANSI/BHMA A156.10-1996.

105.2.3 Power-Assist and Low-Energy Power-Operated Doors. ANSI/BHMA A156.19-1996.

105.2.4 Safety Code for Elevators and Escalators. ASME/ANSI A17.1-1993, (including Addenda ASME/ANSI A17.1a-1994 and ASME/ANSI A17.1b-1995).

106 Definitions

106.1 General. Terms defined in 106.5 shall have the specified meaning for purposes of this part, unless otherwise stated.

106.2 Terms Defined in Referenced Standards. Terms not defined in this section or in regulations issued by the Department of Justice and the Department of Transportation to implement the Americans with Disabilities Act but specifically defined in a referenced standard, shall have the specified meaning from the referenced standard, unless otherwise stated.

106.3 Undefined Terms. The meaning of terms not specifically defined in this part, or in regulations issued by the Department of Justice and the Department of Transportation to implement the Americans with Disabilities Act or in referenced standards shall be as defined by collegiate dictionaries in the sense that the context implies.

106.4 Interchangeability. Words, terms and phrases used in the singular include the plural and those used in the plural include the singular.

106.5 Defined Terms.

Accessible. A *site*, *building*, *facility*, or portion thereof that complies with this part.

Accessible Means of Egress. Means of egress is a continuous and unobstructed way of exit travel from any point in a *building* or *facility* to a *public way*. An *accessible means of egress* is one that provides an *accessible route* to an *area of refuge*, a horizontal exit or a *public way*.

Accessible Route. A continuous, unobstructed path that complies with this part.

Addition. An expansion, extension, or increase in the gross floor area or height of a *building* or *facility*.

Administrative Authority. A governmental agency that adopts or enforces regulations and guidelines for the design, construction, or *alteration* of *buildings* and *facilities*.

Alteration. A change to a *building* or *facility* that affects or could affect the usability of the *building* or *facility* or part thereof. *Alterations* include, but are not limited to, remodeling, renovation, rehabilitation, reconstruction, historic restoration, resurfacing of *circulation paths* or *vehicular ways*, changes or rearrangement of the structural parts or *elements*, and changes or rearrangement in the plan configuration of walls and full-height partitions. Normal maintenance, reroofing, painting or

wallpapering, or changes to mechanical and electrical systems are not *alterations* unless they affect the usability of the *building* or *facility*.

Area of Refuge. An area where people may remain temporarily to await further instructions or assistance during emergency evacuation.

Assembly Area. A room or *space* accommodating a group of individuals for recreational, educational, political, social, civic, or amusement purposes, or for the consumption of food and drink.

Automatic Door. A door operated with power-operated mechanisms and *operable parts* that open and close the door automatically upon receipt of a momentary actuating signal (see *power-assisted door*).

Building. Any structure used or intended for supporting or sheltering any use or occupancy.

Characters. Letters, numbers, punctuation marks and typographic symbols.

Children's Use. *Spaces* and *elements* specifically designed for use primarily by people 12 years old and younger.

Circulation Path. An exterior or interior way of passage from one place to another for pedestrians, including, but not limited to, *walks*, hallways, courtyards, stairways, and stair landings.

Closed-Circuit Telephone. A telephone with a dedicated line such as a house phone, courtesy phone or phone that must be used to gain entrance to a *facility*.

Common Use. Interior or exterior rooms, *spaces*, or *elements* that are made available for the use of a restricted group of people such as the occupants of a homeless shelter, the occupants of an office *building*, or the guests of such occupants.

Cross Slope. The slope that is perpendicular to the direction of travel (see *running slope*).

Curb Ramp. A short *ramp* cutting through a curb or built up to it.

Destination-Oriented Elevator. An elevator system that provides lobby controls to select floor stops, lobby indicators designating which elevator to use and a car indicator designating the floors at which the car will stop.

Detectable Warning. A standardized surface feature built in or applied to walking surfaces or other *elements* to warn visually impaired people of hazards on a *circulation path*.

Dwelling Unit. A single unit containing rooms and *spaces* for living, bathing, and sleeping, and which may provide a kitchen or food preparation area.

Element. An architectural or mechanical component of a *building*, *facility*, *space*, or *site*.

Employee Work Area. All or any portion of a *space* used only by employees and used only for work. Corridors, toilet rooms, kitchenettes and break rooms are not *employee work areas*.

Entrance. Any access point to a *building* or portion of a *building* or *facility* used for the purpose of entering. An *entrance* includes the approach *walk*, the vertical access leading to the *entrance* platform, the *entrance* platform itself, vestibule if provided, the entry door or gate, and the hardware of the entry door or gate.

Facility. All or any portion of *buildings*, structures, *site* improvements, *elements*, and pedestrian or vehicular routes located on a *site*.

Ground Floor. Any *occupiable* floor not more than one *story* above or below grade with direct access to grade.

Mail Boxes. Receptacles for the receipt of documents, packages, or other deliverable matter. *Mail boxes* include, but are not limited to, post office boxes and receptacles provided by commercial mail-receiving agencies, apartment houses, and schools.

Marked Crossing. A crosswalk or other identified path intended for pedestrian use in crossing a *vehicular way*.

Mezzanine. That portion of a *story* which is an intermediate floor level placed within the *story* and having *occupiable space* above and below its floor.

Occupiable. A room or enclosed *space* designed for human occupancy.

Operable Part. A component of an *element* used to insert or withdraw objects, or to activate, deactivate, or to adjust the *element*.

Pictogram. A pictorial symbol which represents activities, *facilities*, or concepts.

Power-Assisted Door. A door used for human passage with a mechanism that helps to open the door, or relieves the opening resistance of a door, upon the activation of a switch or a continued force applied to the door itself (see *automatic door*).

Private Building or Facility. A place of public accommodation or a commercial *building* or *facility* subject to title III of the ADA and 28 CFR part 36 or a transportation *building* or *facility* subject to title III of the ADA and 49 CFR 37.45.

Project. The whole of one or more residential structures and appurtenant structures, equipment, roads, *walks*, and parking lots which are covered by a single contract for Federal assistance, or are developed as a whole for processing purposes, whether or not located on a common *site*.

Public Building or Facility. A *building* or *facility* or portion of a *building* or *facility* constructed by, on behalf of, or for the use of a public entity subject to title II of the ADA and 28 CFR part 35 or to title II of the ADA and 49 CFR 37.41 or 37.43.

Public Entrance. An *entrance* that is not a *service entrance* or a *restricted entrance*.

Public Use. Interior or exterior rooms, *spaces*, or *elements* that are made available to the public. *Public use* may be provided at a *building* or *facility* that is privately or publicly owned.

Public Way. Any street, alley or other parcel of land open to the outside air leading to a public street, which has been deeded, dedicated or otherwise permanently appropriated to the public for *public use* and which has a clear width and height of not less than 10 feet (3,050 mm).

Qualified Historic Building or Facility. A *building* or *facility* that is listed in or eligible for listing in the National Register of Historic Places; or designated as historic under an appropriate State or local law.

Ramp. A walking surface which has a *running slope* steeper than 1:20.

Restricted Entrance. An *entrance* that is made available for *common use* on a controlled basis but not *public use* and that is not a *service entrance*.

Running Slope. The slope that is parallel to the direction of travel (see *cross slope*).

Self-Service Storage Facility. Real property designed and used for the purpose of renting or leasing individual storage *spaces* to customers for the purpose of storing and removing personal property on a self-service basis.

Service Entrance. An *entrance* intended primarily for delivery of goods or services (see *entrance, public entrance,* and *restricted entrance*).

Sign. An architectural *element* composed of displayed text, numbers, symbolic, *tactile* or pictorial information.

Site. A parcel of land bounded by a property line or a designated portion of a public right-of- way.

Space. A definable area, such as a room, toilet room, hall, *assembly area*, *entrance*, storage room, alcove, courtyard, or lobby.

Story. That portion of a *building* or *facility* included between the upper surface of a floor and upper surface of the floor or roof next above. A *story* containing one or more *mezzanines* has more than one floor level.

Structural Frame. The columns and the girders, beams, and trusses having direct connections to the columns and all other members which are essential to the stability of the *building* or *facility* as a whole.

Tactile. An object that can be perceived using the sense of touch.

Technically Infeasible. With respect to an *alteration* of a *building* or a *facility*, something that has little likelihood of being accomplished because existing structural conditions would require removing or altering a load-bearing member which is an essential part of the *structural frame*; or because other

existing physical or *site* constraints prohibit modification or *addition* of *elements*, *spaces*, or features which are in full and strict compliance with the minimum requirements for *alterations* and which are necessary to provide accessibility.

Transient Lodging. A *building* or *facility* excluding inpatient medical care *facilities*, long-term care *facilities*, or detention or correctional *facilities* that contains one or more guest rooms for sleeping. Guest rooms may include a kitchen or food preparation area. *Transient lodging* may include, but is not limited to, resorts, group homes, hotels, motels, and dormitories, homeless shelters, halfway houses and social service lodging.

TTY. Machinery or equipment that employs interactive text based communications through the transmission of coded signals across the standard telephone network. The term *TTY* can include, for example, devices known as TDDs (telecommunication display devices or telecommunication devices for deaf persons) or computers with special modems. *TTYs* are also called text telephones.

Vehicular Way. A route intended for vehicular traffic, such as a street, driveway, or parking lot.

Walk. An exterior pathway with a prepared surface intended for pedestrian use, including general pedestrian areas such as plazas and courts.

Wheelchair. A mobility aid belonging to any class of three- or four-wheeled devices, usable indoors, designed for and used by individuals with mobility impairments, whether operated manually or powered.

Wheelchair Space. *Space* for a single *wheelchair* and its occupant.

CHAPTER 2: SCOPING REQUIREMENTS

201 Application

201.1 Scope. All areas of newly designed or newly constructed *buildings* and *facilities* and *altered* portions of existing *buildings* and *facilities* shall comply with this part.

201.2 Application Based on Building or Facility Use. Where a *site*, *building*, or *facility* contains more than one use, each portion shall comply with the applicable requirements for that use.

201.3 Temporary and Permanent Structures. This part shall apply to temporary and permanent *buildings* and *facilities*.

Advisory 201.3
Temporary *buildings* or *facilities* covered by these guidelines include, but are not limited to, reviewing stands, temporary classrooms, bleacher areas, fixed furniture systems, wall systems, and exhibit areas, temporary banking *facilities*, temporary health screening *facilities*, and temporary pedestrian passageways around a construction *site*. Structures and equipment directly associated with the actual processes of construction are not required to be *accessible* as permitted in 203.2.

202 Existing Buildings and Facilities

202.1 General. *Additions* and *alterations* to existing *buildings* or *facilities* shall comply with 202.

202.2 Additions. Each *addition* to an existing *building* or *facility* shall comply with the requirements for new construction. Each *addition* that affects or could affect the usability of an area containing a primary function shall comply with 202.4.

202.3 Alterations. Where existing *elements* or *spaces* are *altered*, each *altered element* or *space* shall comply with the applicable provisions of this chapter.

Advisory 202.3
Although covered entities are permitted to limit the scope of an *alteration* to individual *elements*, designers should note that the *alteration* of multiple *elements* within a room or *space* may provide a cost-effective opportunity to make the entire room or *space accessible*.

EXCEPTIONS: 1. *Altered elements* or *spaces* are not required to be located on an *accessible route*, unless required by 202.4.
2. In *alterations*, where compliance with applicable provisions is *technically infeasible*, the *alteration* shall provide accessibility to the maximum extent feasible. Any *elements* or *spaces* of the *building* or

facility that are being *altered* and can be made *accessible* shall be made *accessible* within the scope of the *alteration*.

202.3.1 Prohibited Reduction in Access. An *alteration* that decreases or has the effect of decreasing the accessibility of a *building* or *facility* below the requirements for new construction at the time of the *alteration* is prohibited.

202.3.2 Extent of Application. An *alteration* of an existing *element*, *space*, or area of a *building* or *facility* shall not impose a requirement for accessibility greater than required for new construction.

202.4 Alterations Affecting Primary Function Areas. In addition to the requirements of 202.3, an *alteration* that affects or could affect the usability of or access to an area containing a primary function shall be made so as to ensure that, to the maximum extent feasible, the path of travel to the *altered* area and the rest rooms, telephones, and drinking fountains serving the *altered* area, are readily *accessible* to and usable by individuals with disabilities, unless such *alterations* are disproportionate to the overall *alterations* in terms of cost and scope as determined under criteria established by the Attorney General. In existing transportation *facilities*, an area of primary function shall be as defined under criteria established by the Secretary of the Department of Transportation or the Attorney General.

Advisory 202.4
The area of a *building* or *facility* containing the major activity for which the *building* or *facility* is intended is the primary function area. Department of Justice ADA regulations state, "*Alterations* made to provide an *accessible* path of travel to the altered area will be deemed disproportionate to the overall *alteration* when the cost exceeds 20% of the cost of the *alteration* to the primary function area." (28 CFR section 36.403 (f) (1)). See also Department of Transportation ADA regulations, which use similar concepts in the context of public sector transportation *facilities* (49 CFR section 37.43).

202.5 Alterations to Qualified Historic Buildings and Facilities. *Alterations* to a *qualified historic building or facility* shall comply with 202.3 and 202.4.

EXCEPTION: Where the State Historic Preservation Officer or Advisory Council on Historic Preservation determines that compliance with the requirements for *accessible routes*, *ramps*, *entrances*, or toilet *facilities* would threaten or destroy the historic significance of the *building* or *facility*, the exceptions for *alterations* to *qualified historic buildings* or *facilities* for that *element* shall be permitted to apply.

203 General Exceptions

203.1 General. *Sites*, *buildings*, *facilities,* and *elements* shall be exempt from this part to the extent specified by 203.

203.2 Construction Sites. Structures, *sites,* and equipment directly associated with the actual processes of construction, including, but not limited to scaffolding, bridging, materials hoists, materials

storage, or construction trailers are not required to be *accessible*. Portable toilet units provided for use exclusively by construction personnel on a construction *site* are not required to be *accessible*.

203.3 Employee Work Areas. *Employee work areas* shall be designed and constructed so that individuals with disabilities can approach, enter, and exit the *employee work areas*. In addition, visual alarm coverage shall be provided where audible alarm coverage is provided in *employee work areas*. This part does not require that *employee work areas* be constructed to permit maneuvering within the *employee work area* or be constructed or equipped to be *accessible*.

203.4 Raised Areas. Areas raised primarily for purposes of security, life safety, or fire safety, including but not limited to observation or lookout galleries, prison guard towers, fire towers, or life guard stands are not required to be *accessible* or to be served by an *accessible route*.

203.5 Limited Access Spaces. *Spaces* accessed only by ladders, catwalks, crawl *spaces*, very narrow passageways, or tunnels are not required to be *accessible*.

203.6 Equipment Spaces. *Spaces* frequented only by service personnel for maintenance, repair, or occasional monitoring of equipment are not required to be *accessible*. Such *spaces* include but are not limited to elevator pits, elevator penthouses, mechanical, electrical, or communications equipment rooms, piping or equipment catwalks, water or sewage treatment pump rooms and stations, electric substations and transformer vaults, and highway and tunnel utility *facilities*.

203.7 Single Occupant Structures. Single occupant structures accessed only by passageways below grade or elevated above standard curb height, including but not limited to toll booths that are accessed only by underground tunnels, are not required to be *accessible*.

203.8 Detention and Correctional Facilities. In detention and correctional *facilities*, access is not required in *common use* areas that are used only by inmates or detainees and security personnel and that do not serve holding cells or housing cells or rooms required to be *accessible* in accordance with 233.

203.9 Residential Facilities. In residential *facilities*, access is not required in *common use* areas that do not serve dwelling units required to be accessible by 234.

204 Protruding Objects

204.1 General. Protruding objects on *circulation paths* shall comply with 307.

205 Operable Parts

205.1 General. *Operable parts* on *accessible routes* and in *accessible* rooms and *spaces* shall comply with 309.

206 Accessible Routes

206.1 General. *Accessible routes* shall be provided in accordance with 206.

206.2 Where Required. *Accessible routes* shall be provided where required by 206.2 and shall comply with Chapter 4.

206.2.1 Site Arrival Points. *Accessible routes* shall be provided within the boundary of the *site* from public transportation stops, *accessible* parking *spaces*, passenger loading zones, and public streets or sidewalks, to the *accessible building* or *facility entrance* they serve.

EXCEPTIONS: 1. In *alterations* to *qualified historic buildings or facilities* permitted by 202.5 to use the exceptions for *alterations* to *qualified historic buildings* or *facilities*, at least one *accessible route* from a *site* arrival point to an *accessible entrance* shall be provided.
2. An *accessible route* shall not be required between *site* arrival points and the *building* or *facility entrance* if the only means of access between them is a *vehicular way* not provided for pedestrian access.

Advisory 206.2.1 Exception 2
Access from *site* arrival points may include *vehicular ways*. Where a *vehicular way*, or a portion of a *vehicular way*, is used for pedestrian travel, this exception does not apply.

206.2.2 Within a Site. *Accessible routes* shall connect *accessible buildings*, *accessible facilities*, *accessible elements*, and *accessible spaces* that are on the same *site*.

EXCEPTION: An *accessible route* is not required between *accessible buildings*, *accessible facilities, accessible elements and accessible spaces* that have as the only means of access between them, a *vehicular way* not provided for pedestrian access.

206.2.3 Multi-Level Buildings and Facilities. *Accessible routes* shall connect each level, including *mezzanines*, in multi-*level buildings* and *facilities*.

Advisory 206.2.3
While a *mezzanine* may be a change in level, it is not a *story* for purposes of determining whether a *building* or *facility* is required to have an elevator. If an elevator is required, it must serve *mezzanines*. Levels in *buildings* and *facilities* without elevators must still fully comply with this document.

EXCEPTIONS: 1. An *accessible route* is not required to levels located above or below the *accessible* level in *private buildings* or *facilities* that are less than three *stories* or that have less than 3000 square feet per *story* unless the *building or facility* is a shopping center, a shopping mall, the professional office of a health care provider, or another type of *facility* as determined by the Attorney General. In addition, Exception 1 shall not apply to a terminal, depot or other station used for specified public transportation or to an airport passenger terminal.
2. An *accessible route* is not required to levels located above or below the *accessible* level in *public buildings or facilities* that are less than three *stories* and that are not open to the public if

the level above or below the *accessible* level houses no more than five persons and is less than 500 square feet.

3. An *accessible route* is not required to levels located above or below the *accessible* level in detention and correctional *facilities* where *accessible* cells or rooms provided in accordance with 233, all *common use* areas serving such cells or rooms, and all *public use* areas are on an *accessible* route.

4. An *accessible route* is not required to levels located above or below the *accessible* level in residential *facilities* where *accessible* dwelling units complying with 234, all *common use* areas serving such dwelling units, and all *public use* areas are on an *accessible* route.

Advisory 206.2.3 Exception 4
Where *common use* areas are provided for the use of residents, it is presumed that all such *common use* areas "serve" *accessible dwelling units* unless use is restricted to residents occupying other *dwelling units*. For example, if all residents are permitted to use all laundry rooms, then all laundry rooms "serve" *accessible dwelling units*. However, if the laundry room on the first floor is restricted to use by residents on the first floor, and the second floor laundry room is for use by occupants of the second floor, then first floor *accessible* units are "served" only by laundry rooms on the first floor. In this example, an *accessible route* is not required to the second floor provided that all *accessible* units and all *common use* use areas serving them are on the first floor.

5. An *accessible route* is not required to levels located above or below the *accessible* level in multi-story *transient lodging* guest rooms provided that *spaces* complying with 806.2 are on an *accessible route* and are suitable for dual occupancy.

6. In *assembly areas* required to comply with 221, an *accessible route* is not required to serve seating where *wheelchair spaces* or designated aisle seats required to be on an *accessible route* are not provided.

7. In air traffic control towers, an *accessible route* is not required to serve the cab and the floor immediately below the cab.

8. In *alterations* to *qualified historic buildings or facilities* where an exception is permitted by 202.5, an *accessible route* from an *accessible entrance* to all publicly used *spaces* on at least the level of the *accessible entrance* shall be provided.

206.2.3.1 Stairs and Escalators in Existing Buildings. In *alterations* and *additions*, where an escalator or stair is provided where none existed previously and major structural modifications are necessary for such installation, an *accessible route* shall be provided between the levels served by the escalator or stair, unless exempted by 206.2.3.

206.2.4 Accessible Spaces and Elements. *Accessible routes* shall connect *accessible building* or *facility entrances* with all *accessible spaces* and *elements* within the *building* or *facility* which are otherwise connected by a *circulation path*.

Advisory 206.2.4
Accessible routes must connect all *spaces* and *elements* required to be *accessible* including, but not limited to, raised areas and speaker platforms.

EXCEPTIONS: 1. An *accessible route* is not required between levels where exempted by 206.2.3.
2. Vertical access to raised judges' benches or courtroom stations need not be installed provided that the required clear floor *space*, maneuvering *space*, and, if appropriate, electrical service are installed at the time of initial construction to allow future installation of a means of vertical access complying with 303.4, 206.6, or 206.7 without requiring substantial reconstruction of the *space*.

206.2.5 Restaurants and Cafeterias. In restaurants and cafeterias, an *accessible route* shall be provided to all dining areas, including raised or sunken dining areas, and outdoor seating areas.

EXCEPTIONS: 1. In *buildings or facilities* not required to provide an *accessible route* between *stories*, an *accessible route* to a *mezzanine* dining area is not required, provided that the *mezzanine* contains less than 25 percent of the total area for seating and dining and the same services are provided in the *accessible* area.
2. In *alterations*, accessibility to existing raised or sunken dining areas, or to all parts of existing outdoor seating areas is not required provided that the same services and decor are provided in an *accessible space* usable by the public and not restricted to use by people with disabilities.

206.2.6 Performance Areas. An *accessible route* shall be provided where a *circulation path* directly connects a performance area to an assembly seating area. An *accessible route* shall be provided from performance areas to ancillary areas or *facilities* used by performers. In *alterations*, where it is *technically infeasible* to alter all performance areas to be on an *accessible route*, at least one of each type of performance area shall be made *accessible*.

206.3 Location. *Accessible routes* shall coincide with or be located in the same area as a general *circulation path*. Where the *circulation path* is interior, the *accessible route* shall also be interior.

Advisory 206.3
The *accessible route* must be in the same area as the general *circulation path*. This means that *circulation paths*, such as *vehicular ways* designed for pedestrian traffic, *walks*, and unpaved paths that are designed to be routinely used by pedestrians must be *accessible* or have an *accessible route* nearby.

206.4 Entrances. *Accessible entrances* shall be provided in accordance with 206.4.

EXCEPTIONS: 1. Where an *alteration* includes *alterations* to an *entrance*, and the *building* or *facility* has an *accessible entrance*, the *altered entrance* is not required to be *accessible*, unless required by 202.4. *Signs* complying with 206.4.8 shall be provided.
2. In *alterations* to *qualified historic buildings or facilities* permitted by 202.5 to use exceptions for *alterations* to *qualified historic buildings* or *facilities,* at least one *accessible public entrance* shall be provided. Where no *public entrance* can be made *accessible*, then either an unlocked *entrance* not used by the public shall be made *accessible*; or a locked *accessible entrance* with a notification system or remote monitoring shall be provided. *Signs* complying with 206.4.8 shall be provided at the primary *entrance* and at the *accessible entrance*.

206.4.1 Parking Garage Entrances. Where direct access to a *building* or *facility* is provided for pedestrians from an enclosed parking garage, at least one direct *entrance* from the garage to the *building* shall be *accessible*.

206.4.2 Entrances from Tunnels or Elevated Walkways. Where direct access is provided for pedestrians from a pedestrian tunnel or elevated walkway to a *building* or *facility*, at least one direct *entrance* to the *building* or *facility* from each tunnel or walkway shall be *accessible*.

206.4.3 Public Entrances. In addition to *accessible entrances* required by 206.4.1 and 206.4.2, at least 50 percent of all *public entrances* shall be *accessible*. At least one *accessible entrance* shall be a *ground floor entrance*.

206.4.4 Tenant Spaces. At least one *accessible entrance* shall be provided to each tenancy in a *facility*, except as specified in 225 or 234.

206.4.5 Restricted Entrances. Where *restricted entrances* are provided to a *building* or *facility*, at least one *restricted entrance* to the *building* or *facility* shall be *accessible*.

206.4.6 Service Entrances. If a *service entrance* is the only *entrance* to a *building* or to a tenancy in a *facility*, that *entrance* shall be *accessible*.

206.4.7 Entrances for Inmates or Detainees. Where *entrances* used only by inmates or detainees and security personnel are provided at judicial *facilities,* detention *facilities,* or correctional *facilities*, at least one such *entrance* shall be *accessible*.

206.4.8 Signs. Where not all *entrances* are *accessible*, *accessible entrances* shall be identified by the International Symbol of Accessibility complying with 703.7 and directional *signs* indicating the location of the nearest *accessible entrance* shall be provided at inaccessible *entrances*. Directional *signs* shall comply with 703.4. No *signs* are required where all *entrances* are *accessible*.

Advisory 206.4.8
Where a directional *sign* is required, it should be located to minimize backtracking. In some cases, this could mean locating a *sign* at the beginning of a route, not just at the inaccessible *entrances* to a *building*.

206.5 Doors and Doorways. *Accessible* doors and doorways shall be provided in accordance with 206.5 and shall comply with 404.

206.5.1 Accessible Entrances. Each *accessible entrance* to a *building* or *facility* shall have at least one *accessible* door or doorway.

206.5.2 Accessible Rooms and Spaces. Within a *building* or *facility*, at least one door or doorway serving each *accessible* room or *space* shall be *accessible*.

206.6 Elevators. New passenger elevators shall comply with 407.2 or 407.3. Where multiple elevators are provided, each passenger elevator shall comply with 407.2 or 407.3.

EXCEPTION: Where an elevator is provided in a *building* or *facility* eligible for the exceptions to 206.2.3, the elevator shall comply with 407.2, 407.3 or 407.4.

206.6.1 Existing Elevators. *Altered elements* of existing elevators shall comply with 407.5. Such *elements* shall also be *altered* in all elevators that are programmed to respond to the same hall call control as the *altered* elevator and shall comply with the requirements of 407.5.

206.7 Wheelchair (Platform) Lifts. *Wheelchair* (platform) lifts shall be permitted as a component of an *accessible route* in new construction as permitted by 206.7 and shall comply with 408. *Wheelchair* (platform) lifts provided as a component of an *accessible route* in an existing *building* or *facility* shall comply with 408.

206.7.1 Performance Areas and Speakers' Platforms. *Wheelchair* (platform) lifts shall be permitted to provide an *accessible route* to a performance area or a speakers' platform in an assembly occupancy.

206.7.2 Wheelchair Spaces. *Wheelchair* (platform) lifts shall be permitted to comply with the *wheelchair space* dispersion and line-of-sight requirements of 221 and 802.

206.7.3 Incidental Spaces. *Wheelchair* (platform) lifts shall be permitted to provide an *accessible route* to incidental *occupiable spaces* and rooms which are not open to the public and which are occupied by five persons maximum.

206.7.4 Judicial Spaces. *Wheelchair* (platform) lifts shall be permitted to provide an *accessible route* to raised judges' benches, clerks' stations, jury boxes and witness stands or to depressed areas such as the well of a court.

206.8 Security Barriers. Security barriers including, but not limited to, security bollards and security check points shall not obstruct a required *accessible route* or *accessible means of egress*.

EXCEPTION: Where security barriers incorporate equipment such as metal detectors, fluoroscopes, or other similar devices which cannot be made *accessible*, an *accessible route* shall be provided adjacent to such security screening devices to facilitate an equivalent *circulation path*. The *circulation path* shall permit persons with disabilities passing through security barriers to

maintain visual contact with their personal items to the same extent provided others traversing the barrier.

207 Accessible Means of Egress

207.1 General. All accessible *spaces* shall be provided with not less than one *accessible means of egress*. Where more than one means of egress is required from any accessible *space*, each accessible portion of the *space* shall be served by not less than two *accessible means of egress*. *Accessible means of egress* shall comply with 409.

EXCEPTION: *Accessible means of egress* are not required in *alterations* to existing *buildings* or *facilities*.

207.2 Elevators. In *buildings* or *facilities* where a required *accessible* floor is four or more *stories* above or below a level of exit discharge, at least one required *accessible means of egress* shall be an elevator complying with 409.3.

207.3 Signs. At exit stairways and elevators serving a required *accessible space*, but not serving as an *accessible means of egress*, directional *signs* indicating the location of *accessible means of egress* shall be provided. Such *signs* shall comply with 703.4.

208 Parking Spaces

208.1 General. Where parking *spaces* are provided, *accessible* parking *spaces* shall be provided in accordance with 208.

EXCEPTION: This section does not apply to parking *spaces* used exclusively for buses, trucks, other delivery vehicles, law enforcement vehicles, or vehicular impound and motor pools where lots accessed by the public are provided with a passenger loading zone complying with 503.

208.2 Number Required. *Accessible* parking *spaces* shall be provided in accordance with Table 208.2, except as required by 208.2.1, 208.2.2, and 208.2.3, and shall comply with 502.

Table 208.2 Accessible Parking Spaces

Total Number of Parking Spaces Provided in Lot	Minimum Required Number of Accessible Parking Spaces
1 to 25	1
26 to 50	2
51 to 75	3
76 to 100	4
101 to 150	5

Table 208.2 Accessible Parking Spaces

Total Number of Parking Spaces Provided in Lot	Minimum Required Number of Accessible Parking Spaces
151 to 200	6
201 to 300	7
301 to 400	8
401 to 500	9
501 to 1000	2 percent of total
1001 and over	20, plus 1 for each 100, or fraction thereof, over 1000

208.2.1 Hospital Outpatient Facilities. Ten percent of patient and visitor parking *spaces* provided to serve hospital outpatient *facilities* shall be *accessible*.

Advisory 208.2.1

The term "outpatient facility" is not defined in this document but is intended to cover *facilities* or units that provide regular and continuing medical treatment without an overnight stay, and that are located in hospitals. Doctors' offices, independent clinics, or other *facilities* not located in hospitals are not considered hospital outpatient *facilities* for purposes of this document.

208.2.2 Rehabilitation Facilities and Outpatient Physical Therapy Facilities. Twenty percent of patient and visitor parking *spaces* provided to serve rehabilitation *facilities* and outpatient physical therapy *facilities* shall be *accessible*.

208.2.3 Residential Facilities. Parking *spaces* provided to serve residential *facilities* shall comply with 208.2.3.

208.2.3.1 Parking for Residents. Where parking serves *dwelling units*, one *accessible* parking *space* minimum shall be provided for each *dwelling unit* required to be *accessible* by 234.

208.2.3.2 Additional Spaces for Residents. Where the total parking serving *dwelling units* exceeds one parking *space* per *dwelling unit*, two percent, but not fewer than one *space*, of all the additional parking *spaces* shall be *accessible*.

208.2.3.3 Guest Parking. Where parking is provided for other than residents it shall comply with Table 208.2.

208.2.4 Van Parking Spaces. For every eight or fraction of eight *accessible* parking *spaces* required by 208.2, 208.2.1, and 208.2.3, at least one shall be a van parking *space* complying with 502.

208.3 Identification. *Accessible* parking *spaces* shall be identified by *signs* complying with 502.6.

EXCEPTIONS: 1. Where a total of five or fewer parking *spaces* are provided, identification complying with 502.6 shall not be required.
2. In residential *facilities*, where parking *spaces* are assigned to specific *dwelling units*, identification complying with 502.6 shall not be required.

208.4 Location. Parking *facilities* shall comply with 208.4.

Advisory 208.4
On any *site* with multiple lots, the number of *accessible* parking *spaces* is calculated lot-by-lot.

208.4.1 General. *Accessible* parking *spaces* serving a particular *building* or *facility* shall be located on the shortest *accessible route* from adjacent parking to an *accessible entrance*. In *buildings* or *facilities* with multiple *accessible entrances* with adjacent parking, *accessible* parking *spaces* shall be dispersed and located on the shortest *accessible route* to the *accessible entrances*. In parking *facilities* that do not serve a particular *building or facility*, *accessible* parking *spaces* shall be located on the shortest *accessible route* to an *accessible* pedestrian *entrance* of the parking *facility*.

EXCEPTIONS: 1. All van parking *spaces* shall be permitted to be grouped on one level of a parking structure.
2. *Accessible* parking *spaces* shall be permitted to be located in different lots if equivalent or greater accessibility is provided in terms of distance from an *accessible entrance*, user cost, and user convenience.

208.4.2 Residential Facilities. In residential *facilities*, required *accessible spaces* shall be dispersed throughout all types of parking provided for the *dwelling units* required to be *accessible* by 234.

Advisory 208.4.2
In residential *facilities*, certain *accessible* parking *spaces* may not serve particular *accessible dwelling units*. These *spaces* also should be dispersed.

EXCEPTION: Parking *spaces* for *dwelling units* required to be *accessible* shall not be required to be dispersed throughout all types of parking if equivalent or greater accessibility, in terms of distance from an *accessible entrance*, user cost and user convenience is provided.

209 Passenger Loading Zones

209.1 General. Where passenger loading zones are provided, one passenger loading zone in every continuous 100 linear feet (30 m) maximum of loading zone *space* shall comply with 503.

209.2 Medical Facilities. A passenger loading zone shall be provided at an *accessible entrance* to licensed medical and long-term care *facilities.*

209.3 Valet Parking. Valet parking services shall provide a passenger loading zone.

210 Stairways

210.1 General. Interior and exterior stairs that are part of a means of egress shall comply with 504.

EXCEPTION: 1. In detention and correctional *facilities*, stairs not located in *public use* areas shall not be required to comply with the requirements of this section.
2. In *alterations*, stairs between levels that are connected by an *accessible route* are not required to comply with 504 except that handrails complying with 505 shall be provided.

211 Drinking Fountains and Water Coolers

211.1 General. Where drinking fountains or water coolers are provided, they shall be provided in accordance with 211.

211.1.1 Single Installation. Only one drinking fountain or water cooler shall not be permitted on a *site*, on a floor, or within a secured area.

EXCEPTION: Hi-lo drinking fountains or water coolers complying with 602 shall be permitted.

211.1.2 Multiple Installations. Where more than one drinking fountain or water cooler is provided on a *site*, on a floor, or within a secured area, fifty percent shall comply with 602.1 through 602.6. The remainder of the drinking fountains or water coolers on a *site*, on a floor, or within a secured area shall comply with 602.7.

EXCEPTION: Where three or more drinking fountains or water coolers are provided fifty percent shall be permitted to be calculated to be fifty percent plus or minus one.

212 Sinks, Kitchens, Kitchenettes, and Wet Bars

212.1 General. Sinks, kitchens, kitchenettes, and wet bars shall comply with 212.1.

212.1.1 Kitchens, Kitchenettes and Wet Bars. Where kitchens, kitchenettes, or wet bars are provided, they shall comply with 804.

EXCEPTIONS: 1. In medical care *facilities*, this section does not apply to patient or resident sleeping rooms that are not required to be *accessible* in accordance with 223.2, 223.3, or 223.4.

2. In *transient lodging facilities*, this section does not apply to guest rooms that are not required to be *accessible* in accordance with 224.2.
3. In detention and correctional *facilities* this section does not apply to housing cells not required to be *accessible* in accordance with 233.2.
4. In residential *facilities*, this section does not apply to *dwelling units* that are not required to be *accessible*.

212.1.2 Sinks. Where sinks are provided, at least 5 percent, but not less than one of each type provided in each *accessible* room or *space* shall comply with 606.

EXCEPTION: Mop or service sinks are not required to be *accessible*.

213 Toilet and Bathing Facilities

213.1 General. Where toilet *facilities* and bathing *facilities* are provided, they shall comply with 213. Where toilet *facilities* and bathing *facilities* are provided on an in*accessible* level, toilet *facilities* and bathing *facilities* shall also be provided on an *accessible* level.

213.2 Toilet and Bathing Rooms. Where toilet rooms are provided, each toilet room shall comply with 603. Where bathing rooms are provided, each bathing room shall comply with 603.

Advisory 213.2
The guidelines allow the use of unisex (or single-user) toilet rooms in *alterations* when technical infeasibility can be demonstrated. Unisex toilet rooms offer benefits to people who use personal care assistants. For this reason, it is advantageous to install unisex toilet rooms in addition to *accessible* single-sex toilet rooms in new *facilities*.

EXCEPTIONS: 1. In *alterations* where it is *technically infeasible* to comply with 603, altering existing toilet or bathing rooms is not required where a single unisex toilet room or bathing room complying with 213.2.1 is provided and located in the same area and on the same floor as existing in*accessible* toilet or bathing rooms.
2. Where exceptions for *alterations* to *qualified historic buildings* or *facilities* are permitted by 202.5, and toilet rooms are provided, not less than one toilet room complying with 603 or a unisex room complying with 213.2.1 shall be provided.
3. Where multiple single user portable toilet or bathing units are clustered at a single location, at least 5 percent, but not less than one toilet unit or bathing unit at each cluster shall comply with 603. *Accessible* units shall be identified by the International Symbol of Accessibility complying with 703.7.
4. Where multiple single user toilet rooms are clustered at a single location and contain fixtures in excess of the minimum required number of plumbing fixtures for the occupancy, at least 5 percent, but not less than one toilet room for each use at each cluster shall comply with 603. *Accessible* toilet rooms shall be identified by the International Symbol of Accessibility complying with 703.7.
5. In medical care *facilities*, this section does not apply to toilet *facilities* and bathing *facilities* that are part of patient or resident sleeping rooms not required to be *accessible* in accordance with 223.

6. In *transient lodging facilities*, this section does not apply to toilet *facilities* and bathing *facilities* that are part of guest rooms not required to be *accessible* in accordance with 224.
7. In detention and correctional *facilities*, this section does not apply to toilet or bathing *facilities* that do not serve holding cells or housing cells required to be *accessible* in accordance with 233.
8. In residential *facilities*, this section does not apply to toilet *facilities* and bathing *facilities* that are part of *dwelling units* that are not required to be *accessible.*

213.2.1 Unisex Toilet and Bathing Rooms. A unisex toilet room shall comply with 603, shall contain one water closet and one lavatory, and the door shall have a privacy latch. A unisex bathing room shall comply with 603 and shall contain at least one shower or bathtub.

213.2.2 Signs. Where existing toilet or bathing rooms are *altered* and not made *accessible*, directional *signs* indicating the location of the nearest *accessible* toilet or bathing room within the *facility* shall be provided. Such *signs* shall comply with 703.4 and shall include the International Symbol of Accessibility complying with 703.7. Where existing toilet or bathing rooms are *altered* and not made *accessible*, the *accessible* toilet or bathing room shall be identified by the International Symbol of Accessibility complying with 703.7.

213.3 Fixtures and Accessories. Plumbing fixtures and accessories provided in toilet or bathing rooms required to be *accessible* by 213.2 shall comply with 213.3.

213.3.1 Toilet Compartments. Where toilet compartments are provided, at least one shall be a *wheelchair accessible* compartment complying with 604.8.1. Where six or more toilet compartments are provided, a non-wheelchair accessible compartment complying with 604.8.2 shall be provided in addition to the compartment complying with 604.8.1. Water closets in such compartments shall comply with 604.

213.3.2 Water Closets. Where water closets are provided, but are not in toilet compartments, at least one shall comply with 604.

213.3.3 Urinals. Where urinals are provided, at least one shall comply with 605.

213.3.4 Lavatories. Where lavatories are provided, at least one shall comply with 606. Where only one *accessible* lavatory is provided, it shall not be located in a toilet compartment.

213.3.5 Mirrors. Where mirrors are provided, at least one shall comply with 603.3.

213.3.6 Operable Parts and Dispensers. Where *operable parts*, dispensers, receptacles or other equipment are provided, at least one of each type shall comply with 309.

213.3.7 Bathing Facilities. Where bathtubs or showers are provided, at least one bathtub complying with 607 or at least one shower complying with 608 shall be provided.

214 Laundry Equipment

214.1 General. Where washing machines or clothes dryers are provided in *spaces* required to be *accessible*, *accessible* washing machines and clothes dryers complying with 611 shall be provided in accordance with 214.

214.2 Washing Machines. Where three or fewer washing machines are provided, at least one shall be *accessible*. Where more than three washing machines are provided, at least two shall be *accessible*.

214.3 Dryers. Where three or fewer clothes dryers are provided, at least one shall be *accessible*. Where more than three clothes dryers are provided, at least two shall be *accessible*.

215 Emergency Alarm Systems

215.1 Fire Alarms. Where fire alarm systems are provided in *public use* or *common use* areas, the alarm shall provide a system with both audible and visual signals complying with 702. Guest rooms required by 224 to have *accessible* alarms shall comply with 702.3.6.

Advisory 215.1
Unlike audible alarms, visual alarms must be located within the *space* they serve so that the signal is visible.

215.2 Other Emergency Alarm Systems. Where emergency warning systems other than for fire are provided in *public-use* or *common-use* areas, a system with both audible and visual signals shall be provided.

Advisory 215.2
Facility alarm systems (other than fire alarm systems) that do not instruct occupants to evacuate the *facility*, such as those used for tornado warnings and other emergencies, must provide both audible and visual notification, but are not held to the technical criteria for alarms in section 702. Such alarms need to be differentiated in their signal from fire alarms systems.

216 Signs

216.1 General. *Signs* shall be provided in accordance with 216 and shall comply with 703.

EXCEPTION: In detention and correctional *facilities*, *signs* not located in *public use* areas shall not be required to comply.

216.2 Permanent Designations. Where exterior *signs* are provided as permanent designations of permanent interior rooms and *spaces* at the door to the *space* they serve, the *signs* shall be *tactile* and shall comply with 703.2. Where interior *signs* are provided as permanent designations of permanent

interior rooms and *spaces*, the *signs* shall be *tactile* and shall comply with 703.2. Where *pictograms* are provided as permanent designations of permanent interior rooms and *spaces*, the *pictograms* shall comply with 703.6 and shall have *tactile* text descriptors complying with 703.2.

Advisory 216.2
"Permanent designations" label interior rooms or *spaces* where the designation is not likely to change over time. Examples include, interior *signs* labeling restrooms, room and floor numbers or letters, and room names. *Tactile* text descriptors are required for *pictograms* that are provided to label or identify a permanent room or *space*. *Pictograms* that provide information about a room or *space*, such as "no smoking," occupant logos, and accessibility designations, are not required to have text descriptors.

EXCEPTION: This requirement shall not apply to *signs* used to designate *building* addresses or *building* or *facility* names.

216.3 Directional and Informational Signs. *Signs* that provide direction to or information about permanent interior *spaces* and *facilities* of the *site* shall comply with 703.4.

Advisory 216.3
Information about a permanent room or *space* includes rules of conduct, occupant load, and similar *signs*. *Signs* providing direction to permanent rooms or *spaces* include those that identify egress routes.

EXCEPTION: *Building* directories, menus, and temporary *signs* are not required to comply with 703.4.

216.4 Exit Doors. Exit doors shall be identified by *tactile signs* complying with 703.2.

217 Telephones

217.1 General. Where coin-operated public pay telephones, coinless public pay telephones, public *closed-circuit telephones*, or other types of public telephones are provided, *accessible* public telephones shall be provided in accordance with 217 for each type of public telephone provided. For purposes of this section, a bank of telephones shall be considered two or more adjacent telephones.

217.2 Wheelchair Accessible Telephones. Where public telephones are provided, *wheelchair accessible* telephones complying with 704.2 shall be provided in accordance with Table 217.2.

Table 217.2 Wheelchair Accessible Telephones

Number Of Telephones Provided on a Floor or Level	Minimum Required Number of Wheelchair Accessible Telephones
1 or more single units	1 per floor or level
1 bank	1 per floor or level
2 or more banks	1 per bank[1]

1. At least one telephone per floor shall provide a forward approach complying with 704.2.1.2, except for exterior installations where dial tone first service is available.

217.3 Volume Controls. All *wheelchair accessible* telephones required by 217.2 and 25 percent, but not less than one, of all other public telephones provided shall have volume control complying with 704.3. Such telephones shall be identified by *signs* containing *pictograms* of a telephone handset with radiating sound waves complying with 703.7.

EXCEPTION: *Pictograms* are not required where all public telephones have volume control.

217.4 TTYs. *TTYs* complying with 704.4 shall be provided in accordance with 217.4.

Advisory 217.4

Separate requirements are provided based on the number of public pay telephones provided at a bank of telephones, within a floor, a *building*, or on a *site*. One *TTY* can be used to satisfy more than one of these requirements. For example, a *TTY* required for a *building* can be used to satisfy the requirement for at least one *TTY* on a *site*. Consideration should be given to phone systems that can accommodate both digital and analog transmissions for compatibility with digital and analog *TTYs*.

217.4.1 Bank Requirement. Where four or more public pay telephones are provided at a bank of telephones, at least one public *TTY* shall be provided at that bank.

EXCEPTION: *TTYs* are not required at banks of telephones located within 200 feet (61 m) of, and on the same floor as, a bank containing a public *TTY*.

217.4.2 Floor Requirement. *TTYs* in *public buildings* shall be provided in accordance with 217.4.2.1. *TTYs* in *private buildings* shall be provided in accordance with 217.4.2.2.

217.4.2.1 Public Buildings. Where at least one public pay telephone is provided on a floor of a *public building*, at least one public *TTY* shall be provided on that floor.

217.4.2.2 Private Buildings. Where four or more public pay telephones are provided on a floor of a *private building*, at least one public *TTY* shall be provided on that floor.

217.4.3 Building Requirement. *TTYs* in *public buildings* shall be provided in accordance with 217.4.3.1. *TTYs* in *private buildings* shall be provided in accordance with 217.4.3.2.

217.4.3.1 Public Buildings. Where at least one public pay telephone is provided in a *public use* area of a *public building*, at least one public *TTY* shall be provided in the *building* in a *public use* area.

217.4.3.2 Private Buildings. Where four or more public pay telephones are provided in a *private building*, at least one public *TTY* shall be provided in the *building*.

217.4.4 Site Requirement. Where four or more public pay telephones are provided on a *site*, at least one public *TTY* shall be provided on the *site*.

217.4.5 Rest Stops, Emergency Roadside Stops, and Service Plazas. Where a public pay telephone is provided at a public rest stop, emergency roadside stop or service plaza, at least one public *TTY* shall be provided.

217.4.6 Hospitals. Where a public pay telephone is provided serving a hospital emergency room, hospital recovery room, or hospital waiting room, at least one public *TTY* shall be provided at each such location.

217.4.7 Transportation Facilities. Transportation *facilities* shall be provided with *TTYs* in accordance with 1003.2.6 and 1004.2, in addition to the *TTYs* required by 217.4.

217.4.8 Detention and Correctional Facilities. In detention and correctional *facilities*, where a public pay telephone is provided in a secured area used only by detainees or inmates and security personnel, then at least one *TTY* shall be provided in at least one such area.

217.4.9 Signs. Identification and directional *signs* shall be provided in accordance with 217.4.9.

217.4.9.1 Identification Signs. Public *TTYs* shall be identified by the International Symbol of *TTY* complying with 703.7.

217.4.9.2 Directional Signs. Directional *signs* indicating the location of the nearest public *TTY* shall be provided at all banks of public pay telephones not containing a public *TTY*. In addition, where *signs* provide direction to public pay telephones, they shall also provide direction to public *TTYs*. Directional *signs* shall comply with 703.4 and shall include the International Symbol of *TTY* complying with 703.7.

217.5 Shelves for Portable TTYs. Where a bank of telephones in the interior of a *building* consists of three or more public pay telephones, at least one public pay telephone at the bank shall be provided with a shelf and an electrical outlet in accordance with 704.5.

EXCEPTIONS: 1. This requirement does not apply to the secured areas of detention and correctional *facilities* where shelves and outlets are prohibited for purposes of security or safety.
2. The shelf and electrical outlet shall not be required at a bank of telephones with a *TTY*.

218 Transportation Facilities

218.1 General. Transportation *facilities* shall comply with Chapter 10.

219 Assistive Listening Systems

219.1 General. Assistive listening systems shall be provided in accordance with 219 and shall comply with 706.

219.2 Required Systems. In each *assembly area* where audible communication is integral to the use of the *space*, an assistive listening system shall be provided.

EXCEPTION: Other than in courtrooms, this requirement shall not apply where there is no audio amplification.

219.3 Receivers. Receivers complying with 706.3 shall be provided for assistive listening systems in accordance with Table 219.3. Twenty five percent minimum of receivers, but not less than two, shall be hearing-aid compatible in accordance with 706.4.

Table 219.3 Receivers for Assistive Listening Systems

Capacity of Seating in Assembly Area	Minimum Required Number of Receivers	Minimum Number of Required Receivers Required to be Hearing-aid Compatible
50 or less	2	2
51 to 200	2 plus 1 per 25 seats over 50 seats[1]	2
201 to 500	2 plus 1 per 25 seats over 50 seats[1]	1 per 4 receivers[1]
501 to 1000	20 plus 1 per 33 seats over 500 seats[1]	1 per 4 receivers[1]
1001 to 2000	35 plus 1 per 50 seats over 1000 seats[1]	1 per 4 recievers[1]
2001 and over	55 plus 1 per 100 seats over 2000 seats[1]	1 per 4 receivers[1]

1. or fraction thereof

219.4 Signs. Where assistive listening systems are provided, *signs* shall be provided to inform patrons of the availability of the system. The *signs* shall be located at ticket offices or windows, where ticket offices or windows are provided. The *signs* shall comply with 703.4 and shall include the International Symbol of Access for Hearing Loss complying with 703.7.

220 Automatic Teller Machines and Fare Machines

220.1 General. Where automatic teller machines or self-service fare vending, collection, or adjustment machines are provided, at least one machine of each type at each location where such machines are provided shall comply with 707. Where bins are provided for envelopes, waste paper, or other purposes, at least one of each type shall comply with 905.

221 Assembly Seating

221.1 General. In a motion picture house, theater, concert hall, stadium, arena, auditorium, convention center, lecture hall, courtroom, legislative chamber, public meeting room, hearing room, or similar *assembly area* that contains seating, *wheelchair spaces*, readily removable companion seats, and designated aisle seats shall be provided and shall comply with 221 and 802 in each type of seating area.

221.2 Wheelchair Spaces. *Wheelchair spaces* shall be provided in all *facilities* identified in 221.1 and in each luxury box, club box, and suite within these *facilities*. *Wheelchair spaces* shall be integrated throughout these seating areas.

221.2.1 Number. *Wheelchair spaces* shall be provided in accordance with Table 221.2.1.

Table 221.2.1 Number of Wheelchair Spaces

Number of Seats[1]	Minimum Number of Wheelchair Spaces Required
4 to 25	1
26 to 50	2
51 to 150	4
151 to 300	5
301 to 500	6
501 and over	6, plus 1 for each 100, or fraction thereof, over 500

1. installed seats plus required *wheelchair spaces*

221.3 Readily Removable Companion Seats. One readily removable companion seat complying with 802.7 shall be provided for each *wheelchair space*. Each required readily removable companion seat

shall provide an additional *wheelchair space* complying with 802.1, 802.2, 802.3, 802.4, 802.5, and 802.9 when removed.

EXCEPTION: 1. Existing companion seats shall be permitted to be fixed and shall not be required to provide *wheelchair spaces*.
2. Companion seats shall be permitted to be fixed and shall not be required to provide *wheelchair spaces* where the seating capacity is 300 or fewer.

221.4 Designated Aisle Seats. Aisle seats complying with 802.8 shall be provided in all *assembly areas*. *Signs* notifying patrons of the availability of such seats shall be posted at the ticket office.

EXCEPTION: Designated aisle seats are not required in luxury boxes, club boxes, or suites.

221.4.1 Number. One designated aisle seat complying with 802.8 per 100 seats, or fraction thereof shall be provided.

221.4.2 Location. At least one of each four required designated aisle seats shall be located on an *accessible route*. All other required designated aisle seats shall be located not more than two rows from an *accessible route* serving such seats.

221.5 Vertical Access. Where *wheelchair spaces* or designated aisle seats share a common *accessible route* that includes vertical access by means of elevators or platform lifts, elevators or platform lifts shall be provided in such number, capacity, and speed as to provide a level of service equivalent to that provided in the same seating area to patrons who can use stairs or other means of vertical access.

222 Dressing, Fitting, and Locker Rooms

222.1 General. Where dressing rooms, fitting rooms, or locker rooms are provided, at least 5 percent, but not less than one, of each type of use in each cluster provided shall comply with 803.

EXCEPTION: In *alterations*, where it is *technically infeasible* to provide *accessible* rooms in accordance with 222.1, one room for each sex on each level shall be *accessible*. Where only unisex rooms are provided, an *accessible* unisex room shall be permitted.

223 Medical Care Facility Patient or Resident Sleeping Rooms

223.1 General. In licensed medical and long-term care *facilities* where people receive physical or medical treatment or care and where the period of stay exceeds twenty-four hours, *accessible* patient or resident sleeping rooms shall be provided in accordance with 223 and shall comply with 805.

223.1.1 Alterations. Where sleeping rooms are *altered* or *added*, the requirements of 223 shall apply only to the sleeping rooms being *altered* or *added* until the number of *accessible* sleeping rooms complies with the minimum number required for new construction.

Advisory 223.1.1
In *alterations* and *additions,* the minimum required number is based on the total number of sleeping rooms altered or added instead of on the total number of sleeping rooms provided in a *facility.* As a *facility* is altered over time, *accessible* sleeping rooms may be dispersed among patient care areas such as pediatrics, cardiac care, maternity, and other units. In this way, people with disabilities may have access to the full-range of services provided by a medical care *facility.*

223.2 Hospitals. In general purpose hospitals, psychiatric *facilities* and detoxification *facilities*, at least 10 percent, but not less than one, of the patient sleeping rooms shall be *accessible*.

223.3 Rehabilitation Facilities. In hospitals and rehabilitation *facilities* that specialize in treating conditions that affect mobility, and in units within hospitals and rehabilitation *facilities* which specialize in treating conditions that affect mobility, 100 percent of the patient sleeping rooms shall be *accessible*.

Advisory 223.3
Conditions that affect mobility include conditions requiring the use or assistance of a brace, cane, crutch, prosthetic device, *wheelchair*, or powered mobility aid; arthritic, neurological, or orthopedic conditions that severely limit one's ability to walk; respiratory diseases and other conditions which may require the use of portable oxygen; and cardiac conditions that impose significant functional limitations. *Facilities* that may provide, but that do not specialize, in the treatment of such conditions, such as general rehabilitation hospitals, are not subject to this requirement but are subject to section 223.2.

223.4 Long Term Care Facilities. In long term care *facilities*, at least 50 percent, but not less than one, of the resident sleeping rooms shall be *accessible*.

224 Transient Lodging Guest Rooms

224.1 General. *Transient lodging facilities* shall provide guest rooms in accordance with 224.

EXCEPTION: This section does not apply to an establishment that is located within a *building* that contains not more than five rooms for rent or hire and that is actually occupied by the proprietor of such establishment as the residence of such proprietor.

224.1.1 Alterations. Where guest rooms are *altered* or *added*, the requirements of 224 shall apply only to the guest rooms being *altered* or *added* until the number of *accessible* guest rooms complies with the minimum number required for new construction.

Advisory 224.1.1
In *alterations* and *additions*, the minimum required number of *accessible* guest rooms is based on the total number of guest rooms altered or added instead of the total number of guest rooms provided in a *facility*. Typically, each *alteration* of a *facility* is limited to a particular portion of the *facility*. When *accessible* guest rooms are added as a result of subsequent *alterations*, compliance with 224.5 is likely to be achieved.

224.1.2 Guest Room Doors and Doorways. *Entrance* and passage doors and doorways into and within all guest rooms shall provide clear width complying with 404.2.3.

Advisory 224.1.2
Because of the social interaction that often occurs in lodging *facilities*, an *accessible* clear opening width is required for doors and doorways to and within all guest rooms, including those not required to be *accessible*. This applies to all doors, including bathroom doors, that allow full passage. Other requirements for doors and doorways in section 404 do not apply to guest rooms not required to be *wheelchair accessible*.

224.2 Accessible Guest Rooms. In *transient lodging facilities*, *accessible* guest rooms shall be provided in accordance with Table 224.2 and shall comply with 806.2

Table 224.2 Accessible Guest Rooms

Total Number of Guest Rooms Provided	Minimum Required Number of Accessible Rooms Without Roll-In Showers	Minimum Required Number of Accessible Rooms With Roll-In Showers	Total Number of Required Accessible Rooms
1 to 25	1	0	1
26 to 50	2	0	2
51 to 75	3	1	4
76 to 100	4	1	5
101 to 150	5	2	7
151 to 200	6	2	8

Table 224.2 Accessible Guest Rooms

Total Number of Guest Rooms Provided	Minimum Required Number of Accessible Rooms Without Roll-In Showers	Minimum Required Number of Accessible Rooms With Roll-In Showers	Total Number of Required Accessible Rooms
201 to 300	7	3	10
301 to 400	8	4	12
401 to 500	9	4	13
501 to 1000	2 percent of total	1 percent of total	3 percent of total
1001 and over	20 plus 1 for each 100, or fraction thereof, over 1000	10 plus 1 for each 100, or fraction thereof, over 1000	30 plus 2 for each 100, or fraction thereof, over 1000

224.3 Accessible Beds. In rooms or *spaces* having four or more beds, the number of beds in the room or *space* required to have clear floor *space* complying with 806.2.3 shall comply with Table 224.3.

Table 224.3 Accessible Beds

Total Number of Beds in a Guest Room	Minimum Required Number of Accessible Beds
4 to 25	1
26 to 50	2
51 to 75	4
76 to 100	5
101 to 150	7
151 to 200	8
201 to 300	10
301 to 400	12
401 to 500	13
501 to 1000	3 percent of total
1001 and over	30 plus 2 for each 100, or fraction thereof, over 1000

224.4 Communication Features. In *transient lodging facilities*, at least fifty percent, but not less than one, of the total number of guest rooms shall have *accessible* communication features complying with 806.3.

224.5 Dispersion. Fifty percent, but not less than one, of the guest rooms required to comply with 806.2 shall also comply with 806.3. Guest rooms required to comply with 806.2 and guest rooms required to comply with 806.3 shall be dispersed among the various classes of guest rooms and shall provide choices of types of rooms, types of beds, and other amenities comparable to the choices provided to other guests. Where the minimum number of rooms or beds required to be *accessible* is not sufficient to allow for complete dispersion, rooms or beds shall be dispersed in the following priority: room type, bed type, and amenities.

Advisory 224.5
Factors to be considered in providing an equivalent range of options may include, but are not limited to, room size, bed size, cost, view, bathroom fixtures such as hot tubs and spas, smoking and nonsmoking, the number of beds, and the number of rooms provided.

225 Self-Service Storage Facilities

225.1 General. *Self-service storage facilities* shall provide *accessible* individual, self-storage *spaces* in accordance with Table 225.1.

Table 225.1 Accessible Self-Service Storage Facilities

Total Spaces in Facility	Minimum Number of Required Accessible Spaces
1 to 200	5 percent but not less than 1
201 and over	10, plus 2 percent of total number of units over 200

225.2 Dispersion. *Accessible* individual, self-service storage *spaces* shall be dispersed throughout the various classes of *spaces* provided. Where more classes of *spaces* are provided than the number of required *accessible spaces*, the number of *accessible spaces* shall not be required to exceed that required by Table 225.1. *Accessible spaces* shall be permitted to be dispersed in a single *building* of a multi-building *facility*.

226 Dining Surfaces and Work Surfaces

226.1 General. Where dining surfaces and work surfaces, are provided in *accessible spaces*, at least five percent, but not less than one, of the seating and standing *spaces* at the dining surfaces and work surfaces in a room or *space* shall comply with 902.

226.2 Dispersion. *Accessible* dining surfaces and work surfaces shall be distributed throughout the *space* or *facility* containing such *elements*.

227 Sales and Service Counters

227.1 General. Where sales or service counters are provided, they shall be *accessible* in accordance with 227.

227.2 Check-Out Aisles. Where check-out aisles are provided, *accessible* check-out aisles shall be provided in accordance with Table 227.2. Where check-out aisles serve different functions, at least one *accessible* check-out aisle shall be provided for each function. Where check-out aisles are dispersed throughout the *building* or *facility*, *accessible* check-out aisles also shall be dispersed. Check-out aisles required to be *accessible* shall comply with 904.3.

Table 227.2 Accessible Check-Out Aisles

Total Check-Out Aisles of Each Function	Minimum Number of Accessible Check-Out Aisles of Each Function
1 to 4	1
5 to 8	2
9 to 15	3
16 and over	3, plus 20 percent of additional aisles

EXCEPTION: Where check-out aisles are *altered* in *facilities,* at least one of each check-out aisle serving each function shall be made *accessible* until the number of *accessible* check-out aisles complies with 227.2.

227.2.1 Identification. *Accessible* check-out aisles shall be identified by the International Symbol of Accessibility complying with 703.7, unless all check-out aisles in the *facility* are *accessible.* The *sign* shall be above the check-out aisle in the same location as the check-out aisle number or type of check-out identification.

227.3 Point of Sales and Service Counters. Where point of sales and service counters are provided for sales or distribution of goods or services, at least one of each type provided shall comply with 904.4.

Where such counters are dispersed throughout the *building* or *facility*, the *accessible* counters also shall be dispersed.

Advisory 227.3
Types of counters that provide different services in the same *facility* include, but are not limited to, order, pick-up, express, and returns. One continuous counter can be used to provide different types of service. For example, order and pick-up are different services. It would not be acceptable to provide access only to the part of the counter where orders are taken when orders are picked-up at a different location on the same counter. Both the order and pick-up section of the counter must be *accessible*.

227.4 Food Service Lines. Food service lines shall comply with 904.5. Where self-service shelves are provided, at least 50 percent, but not less than one, of each type provided shall comply with 308.

227.5 Queues and Waiting Lines. Queues and waiting lines servicing *accessible* counters or check-out aisles shall comply with 403.

228 Storage

228.1 General. Where storage *elements* are provided in *accessible spaces*, at least one of each type shall comply with 905.

Advisory 228.1
Fixed or built-in storage *elements* include, but are not limited to, closets, cabinets, shelves, and drawers.

228.2 Lockers. Where lockers are provided in *accessible spaces*, at least five percent, but not less than one, of each type shall comply with 905.

228.3 Self-Service Shelving. Self-service shelves shall be located on an *accessible route* complying with 402. Self-service shelving shall not be required to comply with reach range provisions of 308.

Advisory 228.3
Self-service shelves include, but are not limited to, library, store, or post office shelves.

228.4 Coat Hooks and Folding Shelves. Where coat hooks or folding shelves are provided in in*accessible* toilet rooms, toilet compartments, or in dressing, fitting or locker rooms, at least one of each type shall be provided in *accessible* toilet rooms, toilet compartments or dressing, fitting and locker rooms.

229 Depositories, Vending Machines, Change Machines, and Mail Boxes

229.1 Depositories, Vending Machines, and Change Machines. Where provided, at least one of each type of depository, vending machine, and change machine shall comply with 309.

Advisory 229.1
Depositories include, but are not limited to, night receptacles in banks, post offices, video stores, and libraries.

EXCEPTION: Drive-up-only depositories shall not be required to comply with this section.

229.2 Mail Boxes. Where *mail boxes* are provided in an interior location, at least 5 percent, but not less than one, of each type shall comply with 309. In residential *facilities*, where *mail boxes* are provided for each *dwelling unit*, *mail boxes* complying with 309 shall be provided for each *dwelling unit* required to be *accessible* by 234.1.1.

230 Windows

230.1 Windows. Where glazed openings are provided in *accessible* rooms or *spaces* for operation by the occupants, at least one opening shall comply with 309. In *accessible* rooms or *spaces,* each glazed opening required by the *administrative authority* to be operable shall comply with 309.

231 Two-Way Communication Systems

231.1 General. Where a two-way communication system is provided to gain admittance to a *building* or *facility* or to restricted areas within a *building* or *facility*, the system shall comply with 708.

232 Judicial Facilities

232.1 General. Judicial *facilities* shall comply with 232.

232.2 Courtrooms. Each courtroom shall comply with 232.2.

232.2.1 Raised or Depressed Areas. Where provided, areas that are raised or depressed and accessed by *ramps* or *wheelchair* (platform) lifts with entry *ramps* shall provide unobstructed turning *space* complying with 304.

232.2.2 Jury Boxes and Witness Stands. Each jury box and witness stand shall have, within its defined area, clear floor *space* complying with 305.

EXCEPTION: In *alterations*, *accessible wheelchair spaces* are not required to be located within the defined area of raised jury boxes or witness stands and shall be permitted to be located outside these *spaces* where *ramp* or lift access poses a hazard by restricting or projecting into a *means of egress* required by the appropriate *administrative authority*.

232.2.3 Judges' Benches and Courtroom Stations. Judges' benches, clerks' stations, bailiffs' stations, deputy clerks' stations, court reporters' stations and litigants' and counsel stations shall comply with 902.

232.3 Holding Cells. Where provided, central holding cells and court-floor holding cells shall comply with 232.3.

232.3.1 Central Holding Cells. Where separate central holding cells are provided for adult male, juvenile male, adult female, or juvenile female, one of each type shall comply with 807. Where central-holding cells are provided and are not separated by age or sex, at least one cell complying with 807.2 shall be provided.

232.3.2 Court-Floor Holding Cells. Where separate court-floor holding cells are provided for adult male, juvenile male, adult female, or juvenile female, each courtroom shall be served by one cell of each type complying with 807. Where court-floor holding cells are provided and are not separated by age or sex, courtrooms shall be served by at least one cell complying with 807.2. Cells may serve more than one courtroom.

232.4 Visiting Areas. Visiting areas shall comply with 232.4.

232.4.1 Cubicles and Counters. At least five percent, but not less than one, of cubicles shall comply with 902 on both the visitor and detainee sides. Where counters are provided, at least one shall comply with 904.4.2 on both the visitor and detainee sides.

EXCEPTION: This requirement shall not apply to the detainee side of cubicles or counters at non-contact visiting areas not serving *accessible* holding cells.

232.4.2 Partitions. Solid partitions or security glazing that separate visitors from detainees shall comply with 904.6.

233 Detention and Correctional Facilities

233.1 General. *Buildings*, *facilities*, or portions thereof, in which people are detained for penal or correction purposes, or in which the liberty of the inmates is restricted for security reasons shall comply with 233.

Advisory 233.1
Detention *facilities* include, but are not limited to, jails, detention centers, and holding cells in police stations. Correctional *facilities* include, but are not limited to, prisons, reformatories, and correctional centers.

233.2 General Holding Cells and General Housing Cells or Rooms. *Accessible* general holding cells and *accessible* general housing cells or rooms shall be provided in accordance with 233.2.

Advisory 233.2
Accessible cells or rooms should be dispersed among different levels of security, housing categories, and holding classifications (e.g., male/female and adult/juvenile) to facilitate access. Many detention and correctional *facilities* are designed so that certain areas (e.g., "shift" areas) can be adapted to serve as different types of housing according to need. For example, a shift area serving as a medium-security housing unit might be redesignated for a period of time as a high-security housing unit to meet capacity needs. Placement of *accessible* cells or rooms in shift areas may allow additional flexibility in meeting requirements for dispersion of *accessible* cells or rooms.

EXCEPTION: *Alterations* to cells and rooms shall not be required to comply except to the extent determined by the Attorney General.

233.2.1 Accessible Cells or Rooms. At least two percent, but not less than one, of the total number of cells or rooms in a *facility* shall comply with 807.2.

233.2.2 Accessible Beds. In cells or rooms having four or more beds, the number of beds in the cell or room required to have clear floor *space* complying with 807.2 shall comply with Table 224.3.

233.2.3 Communication Features. At least two percent, but not less than one, of the total number of general holding cells and general housing cells or rooms equipped with audible emergency alarm systems or permanently installed telephones within the cell or room shall comply with 807.3.

233.2.4 Dispersion. Fifty percent, but not less than one, of the cells or rooms required to comply with 807.2 shall also comply with 807.3.

233.3 Special Holding Cells and Special Housing Cells or Rooms. Where special holding cells or special housing cells or rooms are provided, at least one serving each purpose shall comply with 807.2. Cells or rooms subject to this requirement include, but are not limited to those used for purposes of orientation, protective custody, administrative or disciplinary detention or segregation, detoxification, and medical isolation.

EXCEPTIONS: 1. Cells or rooms specially designed without protrusions and that are used solely for purposes of suicide prevention shall not be required to comply with 604.5.
2. *Alterations* to cells and rooms shall not be required to comply except to the extent determined by the Attorney General.

233.4 Medical Care Facilities. Patient bedrooms or cells required to be *accessible* by 223 shall be provided in addition to any medical isolation cells required to be *accessible* under 233.3.

233.5 Visiting Areas. Visiting areas shall comply with 233.5.

233.5.1 Cubicles and Counters. At least five percent, but not less than one, of cubicles shall comply with 902 on both the visitor and detainee sides. Where counters are provided, at least one shall comply with 904.4.2 on both the visitor and detainee or inmate sides.

EXCEPTION: This requirement shall not apply to the inmate or detainee side of cubicles or counters at non-contact visiting areas not serving *accessible* holding or housing cells or rooms.

233.5.2 Partitions. Solid partitions or security glazing that separate visitors from detainees shall comply with 904.6.

234 Accessible Residential Facilities

234.1 General. Residential *facilities* shall provide *dwelling units* in accordance with 234.

Advisory 234.1
This section outlines the requirements for residential *facilities* subject to the Americans with Disabilities Act of 1990. The *facilities* covered by this section, as well as other *facilities* not addressed or covered by these sections, may still be subject to other Federal laws such as the Fair Housing Act (42 U.S.C. 3604 et. seq.) and Section 504 of the Rehabilitation Act of 1973 (29 U.S.C. 794). For example, the Fair Housing Act requires that all residential *buildings* having four or more units, regardless of whether they are privately owned or federally assisted, include certain features of *accessible* and adaptable design according to guidelines established by the U. S. Department of Housing and Urban Development (HUD). Further information on these laws and the appropriate regulations should be consulted before proceeding with the design and construction of residential housing which may be covered by such laws.

234.1.1 Accessible Dwelling Units. In residential *facilities*, at least five percent, but not less than one unit, of the total number of *dwelling units* in a *facility* shall comply with 1101 and 1102.

EXCEPTION: Where residential *facilities* contain four or less *dwelling units*, at least five percent, but not less than one unit, of the total number of *dwelling units* in the *project* shall comply with 1101 and 1102.

234.1.2 Accessible Dwelling Units, Alterations. Where *dwelling units* are *altered* or *added*, the requirements of 234 shall apply only to the *dwelling units* being *altered* or *added* until the number of *accessible dwelling units* complies with the minimum number required for new construction.

234.1.3 Communication Features. In residential *facilities,* at least two percent, but not less than one unit, of the total number of *dwelling units* in a *facility* shall comply with 1101 and 1103.

EXCEPTION: Where residential *facilities* contain four or less *dwelling units*, at least two percent, but not less than one unit, of the total number of *dwelling units* in the *project* shall comply with 1101 and 1103.

234.1.4 Communication Features, Alterations. Where *dwelling units* are *altered* or *added*, the requirements of 234 shall apply only to the *dwelling units* being *altered* or *added* until the number of *dwelling units* with *accessible* communication features complies with the minimum number required for new construction.

234.1.5 Dispersion. *Dwelling units* required to comply with 1102 and *dwelling units* required to comply with 1103 shall be dispersed among the various types of *dwelling units* in the *facility* and shall provide choices of *dwelling units* comparable to and integrated with those available to other residents.

EXCEPTION: Single level *dwelling units* shall be permitted where *spaces* and amenities are equivalent to those provided in multi-level *dwelling units*.

TABLE OF CONTENTS

CHAPTER 1: APPLICATION AND ADMINISTRATION 3
F101 Purpose 3
F102 Provisions for Adults and Children 3
F103 Modifications and Waivers 3
F104 Conventions 4
F105 Referenced Standards 5
F106 Definitions 6

CHAPTER 2: SCOPING REQUIREMENTS 11
F201 Application 11
F202 Existing Buildings and Facilities 11
F203 General Exceptions 15
F204 Protruding Objects 16
F205 Operable Parts 16
F206 Accessible Routes 16
F207 Accessible Means of Egress 21
F208 Parking Spaces 21
F209 Passenger Loading Zones 24
F210 Stairways 24
F211 Drinking Fountains and Water Coolers 24
F212 Sinks, Kitchens, Kitchenettes, and Wet Bars 25
F213 Toilet and Bathing Facilities 25
F214 Laundry Equipment 27
F215 Emergency Alarm Systems 27
F216 Signs 28
F217 Telephones 29
F218 Transportation Facilities 31
F219 Assistive Listening Systems 31
F220 Automatic Teller Machines and Fare Machines 32
F221 Assembly Seating 32
F222 Dressing, Fitting, and Locker Rooms 33
F223 Medical Care Facility Patient or Resident Sleeping Rooms 33
F224 Transient Lodging Guest Rooms 34
F225 Self-Service Storage Facilities 37
F226 Dining Surfaces and Work Surfaces 37
F227 Sales and Service Counters 38
F228 Storage 39
F229 Depositories, Vending Machines, Change Machines, and Mail Boxes 40
F230 Windows 40
F231 Two-Way Communication Systems 40

F232 Judicial Facilities 40
F233 Detention and Correctional Facilities 41
F234 Accessible Residential Facilities 43

CHAPTER 1: APPLICATION AND ADMINISTRATION

F101 Purpose

This part provides scoping and technical requirements for accessibility to *sites*, *facilities*, *buildings*, and *elements* by individuals with disabilities. These requirements are to be applied during the design, construction, *lease* and *alteration* of *sites*, *facilities*, *buildings*, and *elements* to the extent required by regulations issued by Federal agencies under the Architectural Barriers Act of 1968.

F102 Provisions for Adults and Children

The technical requirements applicable to this part are based on adult dimensions and anthropometrics. In addition, technical requirements based on children's dimensions and anthropometrics for drinking fountains, water closets, toilet compartments, lavatories and sinks, dining surfaces and work surfaces are included.

F103 Modifications and Waivers

The Architectural Barriers Act authorizes the Administrator of the General Services Administration, the Secretary of the Department of Housing and Urban Development, the Secretary of the Department of Defense, and the United States Postal Service to modify or waive the accessibility standards for *buildings* and facilities covered by the Architectural Barriers Act on a case-by-case basis, upon application made by the head of the department, agency, or instrumentality of the United States concerned. The General Services Administration, the Department of Housing and Urban Development, the Department of Defense, and the United States Postal Service may grant a modification or waiver only upon a determination that it is clearly necessary. Section 502(b)(1) of the Rehabilitation Act of 1973 authorizes the Access Board to ensure that modifications and waivers are based on findings of fact and are not inconsistent with the Architectural Barriers Act.

Advisory F103
The provisions for modifications and waivers differ from the guidelines issued under the Americans with Disabilities Act in that "equivalent facilitation" does not apply. There is a formal procedure for Federal agencies to request a waiver or modification of applicable standards under the Architectural Barriers Act of 1968, 42 U.S.C. section 4156.

F104 Conventions

Figure F104

Convention	Description
36 / 915	dimension showing English units (in inches unless otherwise specified) above the line and SI units (in millimeters unless otherwise specified) below the line
6 / 150	dimension for small measurements
33-36 / 840-915	dimension showing a range with minimum - maximum
min	minimum
max	maximum
>	greater than
<	less than
	boundary of clear floor space or maneuvering clearance
℄	centerline
	a permitted element or its extension
	direction of travel or approach
	a wall, floor, ceiling or other element cut in section or plan
	an element in elevation or plan
	location zone of element, control or feature
italics	defined term

F104.1 Dimensions. Dimensions that are not stated as "maximum" or "minimum" are absolute.

F104.1.1 Construction and Manufacturing Tolerances. All dimensions are subject to conventional industry tolerances.

Advisory F104.1.1
Conventional industry tolerances recognized by this provision include those for field conditions and those that may be a necessary consequence of a particular manufacturing process. Recognized tolerances are not intended to apply to design work. It is good practice when specifying dimensions to avoid stating in the specification a tolerance (i.e., if this document requires "32 inches" avoid specifying "32 inches plus or minus X inches"). This could lead some to mistakenly assume that a tolerance allowed by this document can be applied in addition to the specified tolerance. This "double-dipping" or compounding of tolerances would not achieve the intended requirement. Where the requirement itself allows a range of dimensions, such as in section 604.4 where the height of water closets must be 17 inches minimum to 19 inches maximum measured to the top of the toilet seat, "17 inches minus X inches minimum to 19 inches plus X inches maximum" is how the provision for tolerance is intended to apply. As stated previously though, it is good practice to simply specify the dimensions as "17 inches to 19 inches". Information on specific tolerances may be available from industry or trade organizations, code groups and *building* officials, and published references.

F104.2 Calculation of Percentages. Where the required number of *accessible elements* or *facilities* to be provided is determined by calculations of ratios or percentages and remainders or fractions result, provide the next greater whole number of such *elements* or *facilities*. Where the determination of the required size or dimension of an *element* or *facility* involves ratios or percentages, rounding down for values less than one half shall be permitted.

F105 Referenced Standards

F105.1 General. The standards referenced in this part and listed in F105.2 shall be considered part of the requirements of this part to the prescribed extent of each such reference. References to standards within the technical and scoping requirements shall apply to the specific edition of the reference standard listed in F105.2. Where differences occur between provisions of this part and referenced standards, the provisions of this part shall apply.

Advisory F105.1
In addition to the requirements of this document, there is an obligation to meet the requirements of any referenced standards unless there is a conflict with the guidelines. It is important to use the specific edition of the referenced standards.

F105.2 Referenced Standards.

F105.2.1 Installation, Maintenance, and Use of Protective Signaling Systems. NFPA 72-1996.

F105.2.2 Power-Operated Pedestrian Doors. ANSI/BHMA A156.10-1996.

F105.2.3 Power-Assist and Low-Energy Power-Operated Doors. ANSI/BHMA A156.19-1996.

F105.2.4 Safety Code for Elevators and Escalators. ASME/ANSI A17.1-1993, (including Addenda ASME/ANSI A17.1a-1994 and ASME/ANSI A17.1b-1995).

F106 Definitions

F106.1 General. Terms defined in F106.5 shall have the specified meaning for purposes of this part, unless otherwise stated.

F106.2 Terms Defined in Referenced Standards. Terms not defined in this section, or in regulations issued by the Administrator of the General Services Administration, the Secretary of Defense, the Secretary of Housing and Urban Development, or the U.S. Postal Service to implement the Architectural Barriers Act but specifically defined in a referenced standard, shall have the specified meaning from the referenced standard, unless otherwise stated.

F106.3 Undefined Terms. The meaning of terms not specifically defined in this part, or in regulations issued by the Administrator of the General Services Administration, the Secretary of Defense, the Secretary of Housing and Urban Development, or the United States Postal Service to implement the Architectural Barriers Act or in referenced standards shall be as defined by collegiate dictionaries in the sense that the context implies.

F106.4 Interchangeability. Words, terms and phrases used in the singular include the plural and those used in the plural include the singular.

F106.5 Defined Terms.

Accessible. A *site*, *building*, *facility*, or portion thereof that complies with this part.

Accessible Means of Egress. Means of egress is a continuous and unobstructed way of exit travel from any point in a *building* or *facility* to a *public way*. An *accessible means of egress* is one that provides an *accessible route* to an *area of refuge*, a horizontal exit or a *public way*.

Accessible Route. A continuous, unobstructed path that complies with this part.

Addition. An expansion, extension, or increase in the gross floor area or height of a *building* or *facility*.

Administrative Authority. A governmental agency that adopts or enforces regulations and guidelines for the design, construction, or *alteration* of *buildings* and *facilities*.

Alteration. A change to a *building* or *facility* that affects or could affect the usability of the *building* or *facility* or part thereof. *Alterations* include, but are not limited to, remodeling, renovation, rehabilitation, reconstruction, historic restoration, resurfacing of *circulation paths* or *vehicular ways*,

changes or rearrangement of the structural parts or *elements*, and changes or rearrangement in the plan configuration of walls and full-height partitions. Normal maintenance, reroofing, painting or wallpapering, or changes to mechanical and electrical systems are not *alterations* unless they affect the usability of the *building* or *facility*.

Area of Refuge. An area where people may remain temporarily to await further instructions or assistance during emergency evacuation.

Assembly Area. A room or *space* accommodating a group of individuals for recreational, educational, political, social, civic, or amusement purposes, or for the consumption of food and drink.

Automatic Door. A door operated with power-operated mechanisms and *operable parts* that open and close the door automatically upon receipt of a momentary actuating signal (see *power-assisted door*).

Building. Any structure used or intended for supporting or sheltering any use or occupancy.

Characters. Letters, numbers, punctuation marks and typographic symbols.

Children's Use. *Spaces* and *elements* specifically designed for use primarily by people 12 years old and younger.

Circulation Path. An exterior or interior way of passage from one place to another for pedestrians, including, but not limited to, *walks*, hallways, courtyards, stairways, and stair landings.

Closed-Circuit Telephone. A telephone with a dedicated line such as a house phone, courtesy phone or phone that must be used to gain *entrance* to a *facility*.

Common Use. Interior or exterior rooms, *spaces*, or *elements* that are made available for the use of a restricted group of people such as the occupants of a homeless shelter, the occupants of an office *building*, or the guests of such occupants.

Cross Slope. The slope that is perpendicular to the direction of travel (see *running slope*).

Curb Ramp. A short *ramp* cutting through a curb or built up to it.

Destination-Oriented Elevator. An elevator system that provides lobby controls to select floor stops, lobby indicators designating which elevator to use and a car indicator designating the floors at which the car will stop.

Detectable Warning. A standardized surface feature built in or applied to walking surfaces or other *elements* to warn visually impaired people of hazards on a *circulation path*.

Dwelling Unit. A single unit containing rooms and *spaces* for living, bathing, and sleeping, and which may provide a kitchen or food preparation area.

Element. An architectural or mechanical component of a *building*, *facility*, *space*, or *site*.

Entrance. Any access point to a *building* or portion of a *building* or *facility* used for the purpose of entering. An *entrance* includes the approach *walk*, the vertical access leading to the *entrance* platform, the *entrance* platform itself, vestibule if provided, the entry door or gate, and the hardware of the entry door or gate.

Facility. All or any portion of *buildings*, structures, *site* improvements, *elements*, and pedestrian or vehicular routes located on a *site*.

Ground Floor. Any *occupiable* floor not more than one *story* above or below grade with direct access to grade.

Joint Use. Interior or exterior rooms, *spaces*, or elements that are common *space* available for use by all occupants of the *building*. *Joint use* does not include mechanical or custodial rooms, or areas occupied by other tenants.

Lease. Any agreement which establishes the relationship of landlord and tenant.

Mail Boxes. Receptacles for the receipt of documents, packages, or other deliverable matter. *Mail boxes* include, but are not limited to, post office boxes and receptacles provided by commercial mail-receiving agencies, apartment houses, and schools.

Marked Crossing. A crosswalk or other identified path intended for pedestrian use in crossing a *vehicular way*.

Mezzanine. That portion of a *story* which is an intermediate floor level placed within the *story* and having *occupiable space* above and below its floor.

Occupiable. A room or enclosed *space* designed for human occupancy.

Operable Part. A component of an *element* used to insert or withdraw objects, or to activate, deactivate, or to adjust the *element*.

Pictogram. A pictorial symbol which represents activities, facilities, or concepts.

Power-Assisted Door. A door used for human passage with a mechanism that helps to open the door, or relieves the opening resistance of a door, upon the activation of a switch or a continued force applied to the door itself (see *automatic door*).

Project. The whole of one or more residential structures and appurtenant structures, equipment, roads, *walks*, and parking lots which are covered by a single contract for Federal assistance, or are developed as a whole for processing purposes, whether or not located on a common *site*.

Public Entrance. An *entrance* that is not a *service entrance* or a *restricted entrance*.

Public Use. Interior or exterior rooms, *spaces*, or *elements* that are made available to the public. *Public use* may be provided at a *building* or *facility* that is privately or publicly owned.

Public Way. Any street, alley or other parcel of land open to the outside air leading to a public street, which has been deeded, dedicated or otherwise permanently appropriated to the public for *public use* and which has a clear width and height of not less than 10 feet (3,050 mm).

Qualified Historic Building or Facility. A *building* or *facility* that is listed in or eligible for listing in the National Register of Historic Places; or designated as historic under an appropriate State or local law.

Ramp. A walking surface which has a *running slope* steeper than 1:20.

Restricted Entrance. An *entrance* that is made available for *common use* on a controlled basis but not *public use* and that is not a *service entrance*.

Running Slope. The slope that is parallel to the direction of travel (see *cross slope*).

Self-Service Storage Facility. Real property designed and used for the purpose of renting or leasing individual storage *spaces* to customers for the purpose of storing and removing personal property on a self-service basis.

Service Entrance. An *entrance* intended primarily for delivery of goods or services (see *entrance, public entrance,* and *restricted entrance*).

Sign. An architectural *element* composed of displayed text, numbers, symbolic, *tactile* or pictorial information.

Site. A parcel of land bounded by a property line or a designated portion of a public right-of- way.

Space. A definable area, such as a room, toilet room, hall, *assembly area*, *entrance*, storage room, alcove, courtyard, or lobby.

Story. That portion of a *building* or *facility* included between the upper surface of a floor and upper surface of the floor or roof next above. A *story* containing one or more *mezzanines* has more than one floor level.

Structural Frame. The columns and the girders, beams, and trusses having direct connections to the columns and all other members which are essential to the stability of the *building* or *facility* as a whole.

Tactile. An object that can be perceived using the sense of touch.

Technically Infeasible. With respect to an *alteration* of a *building* or a *facility*, something that has little likelihood of being accomplished because existing structural conditions would require removing or altering a load-bearing member which is an essential part of the *structural frame*; or because other existing physical or *site* constraints prohibit modification or *addition* of *elements*, *spaces*, or features

which are in full and strict compliance with the minimum requirements for *alterations* and which are necessary to provide accessibility.

Transient Lodging. A *building* or *facility* excluding inpatient medical care *facilities*, long-term care *facilities*, or detention or correctional *facilities* that contains one or more guest rooms for sleeping. Guest rooms may include a kitchen or food preparation area. *Transient lodging* may include, but is not limited to, resorts, group homes, hotels, motels, and dormitories, homeless shelters, halfway houses and social service lodging.

TTY. Machinery or equipment that employs interactive text based communications through the transmission of coded signals across the standard telephone network. The term *TTY* can include, for example, devices known as TDDs (telecommunication display devices or telecommunication devices for deaf persons) or computers with special modems. TTYs are also called text telephones.

Vehicular Way. A route intended for vehicular traffic, such as a street, driveway, or parking lot.

Walk. An exterior pathway with a prepared surface intended for pedestrian use, including general pedestrian areas such as plazas and courts.

Wheelchair. A mobility aid belonging to any class of three- or four-wheeled devices, usable indoors, designed for and used by individuals with mobility impairments, whether operated manually or powered.

Wheelchair Space. *Space* for a single *wheelchair* and its occupant.

CHAPTER 2: SCOPING REQUIREMENTS

F201 Application

F201.1 Scope. All areas of newly designed or newly constructed *buildings* and *facilities* and *altered,* or leased portions of existing *buildings* and *facilities* shall comply with this part.

F201.2 Application Based on Building or Facility Use. Where a *site*, *building*, or *facility* contains more than one use, each portion shall comply with the applicable requirements for that use.

F201.3 Temporary and Permanent Structures. This part shall apply to temporary and permanent *buildings* and *facilities.*

Advisory F201.3
Temporary *buildings* or *facilities* covered by these guidelines include, but are not limited to, reviewing stands, temporary classrooms, bleacher areas, fixed furniture systems, wall systems, and exhibit areas, temporary banking *facilities*, temporary health screening *facilities*, and temporary pedestrian passageways around a construction site. Structures and equipment directly associated with the actual processes of construction are not required to be *accessible* as permitted in F203.2.

F202 Existing Buildings and Facilities

F202.1 General. Existing *buildings* or *facilities,* including leased *buildings* or *facilities,* shall comply with F202.

F202.2 Additions. Each *addition* to an existing *building* or *facility* shall comply with the requirements for new construction.

F202.2.1 Accessible Route. At least one *accessible route* shall be provided within the boundary of the *site* from public transportation stops, *accessible* parking *spaces*, passenger loading zones if provided, and public streets or sidewalks, to an *accessible entrance* serving the *addition.* If the only *accessible entrances* serving the *addition* are provided in the existing *building* or *facility*, the *accessible route* shall connect at least one *existing entrance* to all *accessible spaces* and *elements* within the *addition*. In addition, *elements* and *spaces* specified in F202.2.2 through F202.2.5 shall be on, or connect to, the *accessible route*.

F202.2.2 Entrance. Where an *entrance* is not provided in an *addition*, at least one *entrance* in the existing *building* or *facility* shall be *accessible* and shall serve the *addition*.

F202.2.3 Toilet and Bathing Facilities. Where toilet *facilities* and bathing *facilities* are not provided in an *addition* but are provided in the existing *building* or *facility* to serve the *addition*, toilet *facilities* and bathing *facilities* shall be made *accessible* and shall comply with F202.2.3.

EXCEPTION: In *alterations* to areas serving *additions* where it is *technically infeasible* to comply with 603, altering existing toilet or bathing rooms is not required where a single unisex toilet room or bathing room complying with F213.2.1 is provided to serve the *addition*.

F202.2.3.1 Existing Toilet Facility. Where existing toilet *facilities* are provided in the existing *building* or *facility*, at least one toilet *facility* for men and at least one toilet *facility* for women shall be *accessible* and shall serve the *addition*.

EXCEPTION: Where only one toilet *facility* is provided in the existing *building* or *facility*, one toilet *facility* shall be *accessible* and shall serve the *addition*.

F202.2.3.2 Existing Bathing Facility. Where existing bathing *facilities* are provided in the existing *building* or *facility*, at least one bathing *facility* for men and at least one bathing *facility* for women shall be *accessible* and shall serve the *addition*.

EXCEPTION: Where only one bathing *facility* is provided in the existing *building* or *facility*, one bathing *facility* shall be *accessible* and shall serve the *addition*.

F202.2.4 Public Telephone. Where a public telephone is not provided in an *addition* but is provided in the existing *building* or *facility* to serve the *addition*, at least one public telephone in the existing *building* or *facility* shall comply with F217.

F202.2.5 Drinking Fountain. Where a drinking fountain is not provided in an *addition* but is provided in the existing *building* or *facility* to serve the *addition*, at least one drinking fountain in the existing *building* or *facility* shall comply with F211.1.

F202.3 Alterations. Where existing *elements* or *spaces* are *altered*, each *altered element* or *space* shall comply with the applicable provisions of this chapter.

Advisory F202.3
Although covered entities are permitted to limit the scope of an *alteration* to individual *elements*, designers should note that the *alteration* of multiple *elements* within a room or *space* may provide a cost-effective opportunity to make the entire room or *space accessible*.

EXCEPTIONS: 1. *Altered elements* or *spaces* are not required to be located on an *accessible route*, unless required by F202.4.
2. In *alterations*, where compliance with applicable provisions is *technically infeasible*, the *alteration* shall provide accessibility to the maximum extent feasible. Any *elements* or *spaces* of the *building* or *facility* that are being *altered* and can be made *accessible* shall be made *accessible* within the scope of the *alteration*.

F202.3.1 Prohibited Reduction in Access. An *alteration* that decreases or has the effect of decreasing the accessibility of a *building* or *facility* below the requirements for new construction at the time of *alteration* is prohibited.

F202.3.2 Extent of Application.

F202.3.2.1 Altered Elements and Spaces. An *alteration* of an existing *element*, *space*, or area of a *building* or *facility* shall not impose a requirement for accessibility greater than required for new construction.

F202.4 Alterations Affecting Primary Function Areas. In addition to the requirements of F202.3, an *alteration* that affects or could affect the usability of or access to an area containing a primary function shall be made so as to ensure that, to the maximum extent feasible, the path of travel to the *altered* area and the rest rooms, telephones, and drinking fountains serving the *altered* area, are readily *accessible* to and usable by individuals with disabilities, unless such *alterations* are disproportionate to the overall *alterations* in terms of cost and scope as determined under criteria established by the Administrator of the General Services Administration, the Secretary of Defense, the Secretary of Housing and Urban Development, and the United States Postal Service.

Advisory F202.4
The area of a *building* or *facility* containing the major activity for which the *building* or *facility* is intended is the primary function area.

F202.5 Alterations to Qualified Historic Buildings and Facilities. *Alterations* to a *qualified historic building or facility* shall comply with F202.3 and F202.4.

EXCEPTION: Where the State Historic Preservation Officer or Advisory Council on Historic Preservation determines that compliance with the requirements for *accessible routes*, *ramps*, *entrances*, or toilet *facilities* would threaten or destroy the historic significance of the *building* or *facility*, the exceptions for *alterations* to *qualified historic buildings* or *facilities* for that *element* shall be permitted to apply.

F202.6 Leases. *Buildings* or *facilities* for which new *leases* are negotiated by the Federal government after the effective date of the revised Uniform Federal Accessibility Standards (UFAS), including new *leases* for *buildings* or *facilities* previously occupied by the Federal government, shall comply with F202.6.

EXCEPTIONS: 1. *Buildings* or *facilities* leased for use by officials servicing disasters on a temporary, emergency basis shall not be required to comply with F202.
2. *Buildings* or *facilities* leased for 12 months or less shall not be required to comply with F202, provided that the *lease* may not be extended or renewed.

F202.6.1 Joint Use Areas. *Joint use* areas serving the leased *space* shall comply with F202.6.

Advisory F202.6.1
When negotiating a *lease*, there is a need to ensure that joint-use areas are *accessible*. Inaccessible joint-use areas may prevent access to and from leased *space*.

EXCEPTION: *Alterations* and *additions* to *joint use* areas serving the leased *space* shall not be required to comply with F202.2, F202.3, and F202.5 provided that such *alterations* are not undertaken by or on behalf of the Federal government.

F202.6.2 Accessible Route. Primary function areas, as defined by Administrator of the General Services Administration, the Secretary of Defense, the Secretary of Housing and Urban Development, and the United States Postal Service, shall be served by at least one *accessible route* complying with F206. *Elements* and *spaces* required to be *accessible* by F202.6 shall be on an *accessible route* complying with F206.

EXCEPTION: Fire Alarms required by F202.6.5.2 and assistive listening systems required by F202.6.5.5 shall not be required to be on an *accessible route*.

F202.6.3 Toilet and Bathing Facilities. Where provided, toilet *facilities* and bathing *facilities* shall comply with F202.6.3.

F202.6.3.1 Multiple Facilities. At least one toilet *facility* or bathing *facility* for each sex on each floor that has toilet *facilities* or bathing *facilities* shall comply with F213.2 and F213.3.

F202.6.3.2 Single Facilities. Where only one toilet or bathing *facility* is provided in a *building* or *facility* for each sex, either one unisex toilet or bathing *facility,* or one toilet or bathing *facility* for each sex, shall comply with F213.2 and F213.3.

F202.6.4 Parking. Parking shall comply with F208.

F202.6.5 Other Elements and Spaces. Where provided, other *elements* and *spaces* shall comply with F202.6.5.

F202.6.5.1 Drinking Fountains and Water Coolers. Drinking fountains and water coolers shall comply with F211.

F202.6.5.2 Fire Alarms. Fire alarms shall comply with F215.1.

EXCEPTION: Fire alarms shall not be required to comply with 702 where existing power sources must be upgraded to meet the requirement.

F202.6.5.3 Public Telephones. Public telephones shall comply with F217.

F202.6.5.4 Dining Surfaces and Work Surfaces. Dining surfaces and work surfaces shall comply with F226.

F202.6.5.5 Assembly Areas. Assistive listening systems shall comply with F219 and assembly seating shall comply with F221.

F202.6.5.6 Sales and Service Counters. Sales or service counters shall comply with F227.

F202.6.5.7 Depositories, Vending Machines, Change Machines, and Mail Boxes. Depositories, vending machines, change machines, and *mail boxes* shall comply with F229.

F202.6.5.8 Leased Residential Facilities. *Dwelling units* shall comply with F234.

F203 General Exceptions

F203.1 General. *Sites*, *buildings*, *facilities*, and *elements* shall be exempt from this part to the extent specified by F203.

F203.2 Construction Sites. Structures, *sites,* and equipment directly associated with the actual processes of construction, including, but not limited to scaffolding, bridging, materials hoists, materials storage, or construction trailers are not required to be *accessible*. Portable toilet units provided for use exclusively by construction personnel on a construction *site* are not required to be *accessible*.

F203.3 Raised Areas. Areas raised primarily for purposes of security, life safety, or fire safety, including but not limited to observation or lookout galleries, prison guard towers, fire towers, or life guard stands are not required to be *accessible* or to be served by an *accessible route*.

F203.4 Limited Access Spaces. *Spaces* accessed only by ladders, catwalks, crawl *spaces*, very narrow passageways, or tunnels are not required to be *accessible*.

F203.5 Equipment Spaces. *Spaces* frequented only by service personnel for maintenance, repair, or occasional monitoring of equipment are not required to be *accessible*. Such *spaces* include but are not limited to elevator pits, elevator penthouses, mechanical, electrical, or communications equipment rooms, piping or equipment catwalks, water or sewage treatment pump rooms and stations, electric substations and transformer vaults, and highway and tunnel utility *facilities*.

F203.6 Single Occupant Structures. Single occupant structures accessed only by passageways below grade or elevated above standard curb height, including but not limited to toll booths that are accessed only by underground tunnels, are not required to be *accessible*.

F203.7 Detention and Correctional Facilities. In detention and correctional *facilities*, access is not required to *common use* areas that are used only by inmates or detainees and security personnel and that do not serve holding cells or housing cells or rooms required to be *accessible* in accordance with F233.

F203.8 Residential Facilities. In residential *facilities*, access is not required in *common use* areas that do not serve *dwelling units* required to be *accessible* by F234.

F204 Protruding Objects

F204.1 General. Protruding objects on *circulation paths* shall comply with 307.

F205 Operable Parts

F205.1 General. *Operable parts* on *accessible routes* and in *accessible* rooms and *spaces* shall comply with 309.

F206 Accessible Routes

F206.1 General. *Accessible routes* shall be provided in accordance with F206.

F206.2 Where Required. *Accessible routes* shall be provided where required by F206.2 and shall comply with Chapter 4.

F206.2.1 Site Arrival Points. *Accessible routes* shall be provided within the boundary of the *site* from public transportation stops, *accessible* parking *spaces*, passenger loading zones, and public streets or sidewalks, to the *accessible building* or *facility entrance* they serve.

EXCEPTIONS: 1. In *alterations* to *qualified historic buildings or facilities* permitted by F202.5 to use the exceptions for *alterations* to *qualified historic buildings* or *facilities*, at least one *accessible route* from a *site* arrival point to an *accessible entrance* shall be provided.
2. An *accessible route* shall not be required between site arrival points and the *building* or *facility entrance* if the only means of access between them is a *vehicular way* not provided for pedestrian access.

Advisory F206.2.1 Exception 2
Access from site arrival points may include *vehicular ways*. Where a *vehicular way*, or a portion of a *vehicular way*, is used for pedestrian travel, this exception does not apply.

F206.2.2 Within a Site. *Accessible routes* shall connect *accessible buildings*, *accessible facilities*, *accessible elements*, and *accessible spaces* that are on the same *site*.

EXCEPTION: An *accessible route* is not required between *accessible buildings*, *accessible facilities, accessible elements and accessible spaces* that have as the only means of access between them, a *vehicular way* not provided for pedestrian access.

F206.2.3 Multi-Level Buildings and Facilities. *Accessible routes* shall connect each level, including *mezzanines*, in multi-level *buildings* and *facilities*.

Advisory F206.2.3
While a *mezzanine* may be a change in level, it is not a *story* for purposes of determining whether a *building* or *facility* is required to have an elevator. If an elevator is required, it must serve *mezzanines*. Levels in *buildings* and *facilities* without elevators must still fully comply with this document.

EXCEPTIONS: 1. An *accessible route* is not required to levels located above or below the *accessible* level in *buildings* or *facilities* that are less than three *stories* and that are not open to the public if the level above or below the *accessible* level houses no more than five persons and is less than 500 square feet.
2. An *accessible route* is not required to levels located above or below the *accessible* level in detention and correctional *facilities* where *accessible* cells or rooms provided in accordance with F233, all *common use* areas serving such cells or rooms, and all *public use* areas are on an *accessible* route.
3. An *accessible route* is not required to levels located above or below the *accessible* level in residential *facilities* where *accessible dwelling units* complying with F234, all *common use* areas serving such *dwelling units*, and all *public use* areas are on an *accessible route*.

Advisory F206.2.3 Exception 3
Where *common use* areas are provided for the use of residents, it is presumed that all such *common use* areas "serve" *accessible dwelling units* unless use is restricted to residents occupying other *dwelling units*. For example, if all residents are permitted to use all laundry rooms, then all laundry rooms "serve" *accessible dwelling units*. However, if the laundry room on the first floor is restricted to use by residents on the first floor, and the second floor laundry room is for use by occupants of the second floor, then first floor *accessible* units are "served" only by laundry rooms on the first floor. In this example, an *accessible route* is not required to the second floor provided that all *accessible* units and all *common use* use areas serving them are on the first floor.

4. An *accessible route* is not required to levels located above or below the *accessible* level in multi-story *transient lodging* guest rooms provided that *spaces* complying with 806.2 are on an *accessible route* and are suitable for dual occupancy.
5. In *assembly areas* required to comply with F221, an *accessible route* is not required to serve seating where *wheelchair spaces* or designated aisle seats required to be on an *accessible route* are not provided.
6. In air traffic control towers, an *accessible route* is not required to serve the cab and the floor immediately below the cab.
7. In *alterations* to *qualified historic buildings or facilities* where an exception is permitted by F202.5, an *accessible route* from an *accessible entrance* to all publicly used *spaces* on at least the level of the *accessible entrance* shall be provided.

F206.2.3.1 Stairs and Escalators in Existing Buildings. In *alterations* and *additions*, where an escalator or stair is provided where none existed previously and major structural modifications are necessary for such installation, an *accessible route* shall be provided between the levels served by the escalator or stair, unless exempted by F206.2.3.

F206.2.4 Accessible Spaces and Elements. *Accessible routes* shall connect *accessible building* or *facility entrances* with all *accessible spaces* and *elements* within the *building* or *facility* which are otherwise connected by a *circulation path*.

Advisory F206.2.4
*Accessible route*s must connect all *spaces* and *elements* required to be *accessible* including, but not limited to, raised areas and speaker platforms.

EXCEPTIONS: 1. An *accessible route* is not required between levels where exempted by F206.2.3.
2. Vertical access to raised judges' benches or courtroom stations need not be installed provided that the required clear floor *space*, maneuvering *space*, and, if appropriate, electrical service are installed at the time of initial construction to allow future installation of a means of vertical access complying with F206.6, F206.7, or 303.4 without requiring substantial reconstruction of the *space*.

F206.2.5 Restaurants and Cafeterias. In restaurants and cafeterias, an *accessible route* shall be provided to all dining areas, including raised or sunken dining areas, and outdoor seating areas.

EXCEPTIONS: 1. In *buildings or facilities* not required to provide an *accessible route* between *stories*, an *accessible route* to a *mezzanine* dining area is not required, provided that the *mezzanine* contains less than 25 percent of the total area for seating and dining and the same services are provided in the *accessible* area.
2. In *alterations*, accessibility to existing raised or sunken dining areas, or to all parts of existing outdoor seating areas is not required provided that the same services and decor are provided in an *accessible space* usable by the public and not restricted to use by people with disabilities.

F206.2.6 Performance Areas. An *accessible route* shall be provided where a *circulation path* directly connects a performance area to an assembly seating area. An *accessible route* shall be provided from performance areas to ancillary areas or *facilities* used by performers. In *alterations*, where it is *technically infeasible* to alter all performance areas to be on an *accessible route*, at least one of each type of performance area shall be made *accessible*.

F206.3 Location. *Accessible routes* shall coincide with or be located in the same area as a general *circulation path*. Where the *circulation path* is interior, the *accessible route* shall also be interior.

Advisory F206.3
The *accessible route* must be in the same area as the general *circulation path*. This means that *circulation paths*, such as *vehicular ways* designed for pedestrian traffic, *walks*, and unpaved paths that are designed to be routinely used by pedestrians must be *accessible* or have an *accessible route* nearby.

F206.4 Entrances. *Accessible entrances* shall be provided in accordance with F206.4.

EXCEPTIONS: 1. Where an *alteration* includes *alterations* to an *entrance*, and the *building* or *facility* has an *accessible entrance*, the *altered entrance* is not required to be *accessible*, unless required by F202.4. *Signs* complying with F206.4.8 shall be provided.
2. In *alterations* to *qualified historic buildings or facilities* permitted by F202.5 to use exceptions for *alterations* to *qualified historic buildings* or *facilities,* at least one *accessible* public *entrance* shall be provided. Where no public *entrance* can be made *accessible*, then either an unlocked *entrance* not used by the public shall be made *accessible*; or a locked *accessible entrance* with a notification system or remote monitoring shall be provided. *Signs* complying with F206.4.8 shall be provided at the primary *entrance* and at the *accessible entrance*.

F206.4.1 Parking Garage Entrances. Where direct access to a *building* or *facility* is provided for pedestrians from an enclosed parking garage, at least one direct *entrance* from the garage to the *building* shall be *accessible*.

F206.4.2 Entrances from Tunnels or Elevated Walkways. Where direct access is provided for pedestrians from a pedestrian tunnel or elevated walkway to a *building* or *facility*, at least one direct *entrance* to the *building* or *facility* from each tunnel or walkway shall be *accessible*.

F206.4.3 Public Entrances. In addition to *accessible entrances* required by F206.4.1 and F206.4.2, at least 50 percent of all public *entrances* shall be *accessible*. At least one *accessible entrance* shall be a *ground floor entrance*.

F206.4.4 Tenant Spaces. At least one *accessible entrance* shall be provided to each tenancy in a *facility*, except as specified in F225 or F234.

F206.4.5 Restricted Entrances. Where *restricted entrances* are provided to a *building* or *facility*, at least one *restricted entrance* to the *building* or *facility* shall be *accessible*.

F206.4.6 Service Entrances. If a *service entrance* is the only *entrance* to a *building* or to a tenancy in a *facility*, that *entrance* shall be *accessible*.

F206.4.7 Entrances for Inmates or Detainees. Where *entrances* used only by inmates or detainees and security personnel are provided at judicial *facilities,* detention *facilities,* or correctional *facilities*, at least one such *entrance* shall be *accessible*.

F206.4.8 Signs. Where not all *entrances* are *accessible*, *accessible entrances* shall be identified by the International Symbol of Accessibility complying with 703.7 and directional *signs* indicating the location of the nearest *accessible entrance* shall be provided at inaccessible *entrances*. Directional *signs* shall comply with 703.4. No *signs* are required where all *entrances* are *accessible*.

Advisory F206.4.8
Where a directional *sign* is required, it should be located to minimize backtracking. In some cases, this could mean locating a *sign* at the beginning of a route, not just at the in*accessible* entrances to a *building*.

F206.5 Doors and Doorways. *Accessible* doors and doorways shall be provided in accordance with F206.5 and shall comply with 404.

F206.5.1 Accessible Entrances. Each *accessible entrance* to a *building* or *facility* shall have at least one *accessible* door or doorway.

F206.5.2 Accessible Rooms and Spaces. Within a *building* or *facility*, at least one door or doorway serving each *accessible* room or *space* shall be *accessible*.

F206.6 Elevators. New passenger elevators shall comply with 407.2 or 407.3. Where multiple elevators are provided, each passenger elevator shall comply with 407.2 or 407.3.

EXCEPTION: Where an elevator is provided in a *building* or *facility* eligible for the exceptions to F206.2.3, the elevator shall comply with 407.2, 407.3 or 407.4.

F206.6.1 Existing Elevators. *Altered elements* of existing elevators shall comply with 407.5. Such *elements* shall also be *altered* in all elevators that are programmed to respond to the same hall call control as the *altered* elevator and shall comply with the requirements of 407.5.

F206.7 Wheelchair (Platform) Lifts. *Wheelchair* (platform) lifts shall be permitted as a component of an *accessible route* in new construction as permitted by F206.7 and shall comply with 408. *Wheelchair* (platform) lifts provided as a component of an *accessible route* in an existing *building* or *facility* shall comply with 408.

F206.7.1 Performance Areas and Speakers' Platforms. *Wheelchair* (platform) lifts shall be permitted to provide an *accessible route* to a performance area or a speakers' platform in an assembly occupancy.

F206.7.2 Wheelchair Spaces. *Wheelchair* (platform) lifts shall be permitted to comply with the *wheelchair space* dispersion and line-of-sight requirements of F221 and 802.

F206.7.3 Incidental Spaces. *Wheelchair* (platform) lifts shall be permitted to provide an *accessible route* to incidental *occupiable spaces* and rooms which are not open to the public and which are occupied by five persons maximum.

F206.7.4 Judicial Spaces. *Wheelchair* (platform) lifts shall be permitted to provide an *accessible route* to raised judges' benches, clerks' stations, jury boxes and witness stands or to depressed areas such as the well of a court.

F206.8 Security Barriers. Security barriers including, but not limited to, security bollards and security check points shall not obstruct a required *accessible route* or *accessible means of egress.*

EXCEPTION: Where security barriers incorporate equipment such as metal detectors, fluoroscopes, or other similar devices which cannot be made *accessible*, an *accessible route* shall be provided adjacent to such security screening devices to facilitate an equivalent *circulation path.* The *circulation path* shall permit persons with disabilities passing through security barriers to maintain visual contact with their personal items to the same extent provided others traversing the barrier.

F207 Accessible Means of Egress

F207.1 General. All *accessible spaces* shall be provided with not less than one *accessible means of egress.* Where more than one means of egress is required from any *accessible space*, each *accessible* portion of the *space* shall be served by not less than two *accessible means of egress. Accessible means of egress* shall comply with 409.

EXCEPTION: *Accessible means of egress* are not required in *alterations* to existing *buildings* or *facilities.*

F207.2 Elevators. In *buildings* or *facilities* where a required *accessible* floor is four or more *stories* above or below a level of exit discharge, at least one required *accessible means of egress* shall be an elevator complying with 409.3.

F207.3 Signs. At exit stairways and elevators serving a required *accessible space*, but not serving as an *accessible means of egress*, directional *signs* indicating the location of *accessible means of egress* shall be provided. Such *signs* shall comply with 703.4.

F208 Parking Spaces

F208.1 General. Where parking *spaces* are provided, *accessible* parking *spaces* shall be provided in accordance with F208.

EXCEPTION: This section does not apply to parking *spaces* used exclusively for buses, trucks, other delivery vehicles, law enforcement vehicles, or vehicular impound and motor pools where lots accessed by the public are provided with a passenger loading zone complying with 503.

F208.2 Number Required. *Accessible* parking *spaces* shall be provided in accordance with Table F208.2, except as required by F208.2.1, F208.2.2, and F208.2.3, and shall comply with 502.

Table F208.2 Accessible Parking Spaces

Total Number of Parking Spaces Provided in Lot	Minimum Required Number of Accessible Parking Spaces
1 to 25	1
26 to 50	2
51 to 75	3
76 to 100	4
101 to 150	5
151 to 200	6
201 to 300	7
301 to 400	8
401 to 500	9
501 to 1000	2 percent of total
1001 and over	20, plus 1 for each 100, or fraction thereof, over 1000

F208.2.1 Hospital Outpatient Facilities. Ten percent of patient and visitor parking *spaces* provided to serve hospital outpatient *facilities* shall be *accessible*.

Advisory F208.2.1
The term "outpatient facility" is not defined in this document but is intended to cover *facilities* or units that provide regular and continuing medical treatment without an overnight stay, and that are located in hospitals. Doctors' offices, independent clinics, or other *facilities* not located in hospitals are not considered hospital outpatient *facilities* for purposes of this document.

F208.2.2 Rehabilitation Facilities and Outpatient Physical Therapy Facilities. Twenty percent of patient and visitor parking *spaces* provided to serve rehabilitation *facilities* and outpatient physical therapy *facilities* shall be *accessible*.

F208.2.3 Residential Facilities. Parking *spaces* provided to serve residential *facilities* shall comply with F208.2.3.

F208.2.3.1 Parking for Residents. Where parking serves *dwelling units*, one *accessible* parking *space* minimum shall be provided for each *dwelling unit* required to be *accessible* by F234.

F208.2.3.2 Additional Spaces for Residents. Where the total parking serving *dwelling units* exceeds one parking *space* per *dwelling unit*, two percent, but not fewer than one *space*, of all the additional parking *spaces* shall be *accessible*.

F208.2.3.3 Guest Parking. Where parking is provided for other than residents it shall comply with Table F208.2.

F208.2.4 Van Parking Spaces. For every eight or fraction of eight *accessible* parking *spaces* required by F208.2, F208.2.1, and F208.2.3, at least one shall be a van parking *space* complying with 502.

F208.3 Identification. *Accessible* parking spaces shall be identified by *signs* complying with 502.6.

EXCEPTIONS: 1. Where a total of five or fewer parking *spaces* are provided, identification complying with 502.6 shall not be required.
2. In residential *facilities*, where parking *spaces* are assigned to specific *dwelling units*, identification complying with 502.6 shall not be required.

F208.4 Location. Parking *facilities* shall comply with F208.4.

Advisory F208.4
On any site with multiple lots, the number of *accessible* parking *spaces* is calculated lot-by-lot.

F208.4.1 General. *Accessible* parking *spaces* serving a particular *building* or *facility* shall be located on the shortest *accessible route* from adjacent parking to an *accessible entrance*. In *buildings* or *facilities* with multiple *accessible entrances* with adjacent parking, *accessible* parking *spaces* shall be dispersed and located on the shortest *accessible route* to the *accessible entrances*. In parking *facilities* that do not serve a particular *building or facility*, *accessible* parking *spaces* shall be located on the shortest *accessible route* to an *accessible* pedestrian *entrance* of the parking *facility*.

EXCEPTIONS: 1. All van parking *spaces* shall be permitted to be grouped on one level of a parking structure.
2. *Accessible* parking *spaces* shall be permitted to be located in different lots if equivalent or greater accessibility is provided in terms of distance from an *accessible entrance*, user cost, and user convenience.

F208.4.2 Residential Facilities. In residential *facilities*, required *accessible spaces* shall be dispersed throughout all types of parking provided for the *dwelling units* required to be *accessible* by F234.

Advisory F208.4.2
In residential *facilities*, certain *accessible* parking *spaces* may not serve particular *accessible dwelling units*. These *spaces* also should be dispersed.

EXCEPTION: Parking *spaces* for *dwelling units* required to be *accessible* shall not be required to be dispersed throughout all types of parking if equivalent or greater accessibility, in terms of distance from an *accessible entrance*, user cost and user convenience is provided.

F209 Passenger Loading Zones

F209.1 General. Where passenger loading zones are provided, one passenger loading zone in every continuous 100 linear feet (30 m) maximum of loading zone *space* shall comply with 503.

F209.2 Medical Facilities. A passenger loading zone shall be provided at an *accessible entrance* to licensed medical and long-term care *facilities*.

F209.3 Valet Parking. Valet parking services shall provide a passenger loading zone.

F210 Stairways

F210.1 General. Interior and exterior stairs that are part of a means of egress shall comply with 504.

EXCEPTIONS: 1. In detention and correctional *facilities*, stairs not located in *public use* areas shall not be required to comply with the requirements of this section.
2. In *alterations*, stairs between levels that are connected by an *accessible route* are not required to comply with 504 except that handrails complying with 505 shall be provided.

F211 Drinking Fountains and Water Coolers

F211.1 General. Where drinking fountains or water coolers are provided, they shall be provided in accordance with F211.

F211.1.1 Single Installation. Only one drinking fountain or water cooler shall not be permitted on a *site*, on a floor, or within a secured area.

EXCEPTION: Hi-lo drinking fountains or water coolers complying with 602 shall be permitted.

F211.1.2 Multiple Installations. Where more than one drinking fountain or water cooler is provided on a *site*, on a floor, or within a secured area, fifty percent shall comply with 602.1 through 602.6.

The remainder of the drinking fountains or water coolers on a site, on a floor, or within a secured area shall comply with 602.7.

EXCEPTION: Where three or more drinking fountains or water coolers are provided fifty percent shall be permitted to be calculated to be fifty percent plus or minus one.

F212 Sinks, Kitchens, Kitchenettes, and Wet Bars

F212.1 General. Sinks, Kitchens, kitchenettes, and wet bars shall comply with F212.1.

F212.1.1 Kitchens, Kitchenettes and Wet Bars. Where kitchens, kitchenettes, or wet bars are provided, they shall comply with 804.

EXCEPTIONS: 1. In medical care *facilities*, this section does not apply to patient or resident sleeping rooms that are not required to be *accessible* in accordance with F223.2, F223.3, or F223.4.
2. In *transient lodging facilities*, this section does not apply to guest rooms that are not required to be *accessible* in accordance with F224.2.
3. In detention and correctional *facilities* this section does not apply to housing cells not required to be *accessible* in accordance with F233.2.
4. In residential *facilities*, this section does not apply to *dwelling units* that are not required to be *accessible*.

F212.1.2 Sinks. Where sinks are provided, at least 5 percent, but not less than one of each type, provided in each *accessible* room or *space* shall comply with 606.

EXCEPTION: Mop or service sinks are not required to be *accessible*.

F213 Toilet and Bathing Facilities

F213.1 General. Where toilet *facilities* and bathing *facilities* are provided, they shall comply with F213. Where toilet *facilities* and bathing *facilities* are provided on an inaccessible level, toilet *facilities* and bathing *facilities* shall also be provided on an *accessible* level.

F213.2 Toilet and Bathing Rooms. Where toilet rooms are provided, each toilet room shall comply with 603. Where bathing rooms are provided, each bathing room shall comply with 603.

Advisory F213.2
The guidelines allow the use of unisex (or single-user) toilet rooms in *alterations* when technical infeasibility can be demonstrated. Unisex toilet rooms offer benefits to people who use personal care assistants. For this reason, it is advantageous to install unisex toilet rooms in addition to *accessible* single-sex toilet rooms in new *facilities*.

EXCEPTIONS: 1. In *alterations* where it is *technically infeasible* to comply with 603, altering existing toilet or bathing rooms is not required where a single unisex toilet room or bathing room complying with F213.2.1 is provided and located in the same area and on the same floor as existing inaccessible toilet or bathing rooms.
2. Where exceptions for *alterations* to *qualified historic buildings* or *facilities* are permitted by F202.5, and toilet rooms are provided, not less than one toilet room complying with 603 or a unisex room complying with F213.2.1 shall be provided.
3. Where multiple single user portable toilet or bathing units are clustered at a single location, at least 5 percent, but not less than one toilet unit or bathing unit at each cluster shall comply with 603. *Accessible* units shall be identified by the International Symbol of Accessibility complying with 703.7.
4. Where multiple single user toilet rooms are clustered at a single location and contain fixtures in excess of the minimum required number of plumbing fixtures for the occupancy, at least 5 percent, but not less than one toilet room for each use at each cluster shall comply with 603. *Accessible* toilet rooms shall be identified by the International Symbol of Accessibility complying with 703.7.
5. In medical care *facilities*, this section does not apply to toilet *facilities* and bathing *facilities* that are part of patient or resident sleeping rooms not required to be *accessible* in accordance with F223.
6. In *transient lodging facilities*, this section does not apply to toilet *facilities* and bathing *facilities* that are part of guest rooms not required to be *accessible* in accordance with F224.
7. In detention and correctional *facilities*, this section does not apply to toilet *facilities* and bathing *facilities* that do not serve holding cells or housing cells required to be *accessible* in accordance with F233.
8. In residential *facilities*, this section does not apply to toilet *facilities* and bathing *facilities* that are part of *dwelling units* that are not required to be *accessible.*

F213.2.1 Unisex Toilet and Bathing Rooms. A unisex toilet room shall comply with 603, shall contain one water closet and one lavatory, and the door shall have a privacy latch. A unisex bathing room shall comply with 603 and shall contain at least one shower or bathtub.

F213.2.2 Signs. Where existing toilet or bathing rooms are *altered* and not made *accessible*, directional *signs* indicating the location of the nearest *accessible* toilet or bathing room within the *facility* shall be provided. Such *signs* shall comply with 703.4 and shall include the International Symbol of Accessibility complying with 703.7. Where existing toilet or bathing rooms are *altered* and not made *accessible*, the *accessible* toilet or bathing room shall be identified by the International Symbol of Accessibility complying with 703.7.

F213.3 Fixtures and Accessories. Plumbing fixtures and accessories provided in toilet or bathing rooms required to be *accessible* by F213.2 shall comply with F213.3.

F213.3.1 Toilet Compartments. Where toilet compartments are provided, at least one shall be a *wheelchair accessible* compartment complying with 604.8.1. Where six or more toilet compartments are provided, a non-wheelchair *accessible* compartment complying with 604.8.2 shall be provided in addition to the compartment complying with 604.8.1. Water closets in such compartments shall comply with 604.

F213.3.2 Water Closets. Where water closets are provided, but are not in toilet compartments, at least one shall comply with 604.

F213.3.3 Urinals. Where urinals are provided, at least one shall comply with 605.

F213.3.4 Lavatories. Where lavatories are provided, at least one shall comply with 606. Where only one *accessible* lavatory is provided, it shall not be located in a toilet compartment.

F213.3.5 Mirrors. Where mirrors are provided, at least one shall comply with 603.3.

F213.3.6 Operable Parts and Dispensers. Where *operable parts*, dispensers, receptacles or other equipment are provided, at least one of each type shall comply with 309.

F213.3.7 Bathing Facilities. Where bathtubs or showers are provided, at least one bathtub complying with 607 or at least one shower complying with 608 shall be provided.

F214 Laundry Equipment

F214.1 General. Where washing machines or clothes dryers are provided in *spaces* required to be *accessible*, *accessible* washing machines and clothes dryers complying with 611 shall be provided in accordance with F214.

F214.2 Washing Machines. Where three or fewer washing machines are provided, at least one shall be *accessible*. Where more than three washing machines are provided, at least two shall be *accessible*.

F214.3 Dryers. Where three or fewer clothes dryers are provided, at least one shall be *accessible*. Where more than three clothes dryers are provided, at least two shall be *accessible*.

F215 Emergency Alarm Systems

F215.1 Fire Alarms. Where fire alarm systems are provided in *public use* or *common use* areas, the alarm shall provide a system with both audible and visual signals complying with 702. Guest rooms required by F224 to have *accessible* alarms shall comply with 702.3.6.

Advisory F215.1
Unlike audible alarms, visual alarms must be located within the *space* they serve so that the signal is visible.

F215.2 Other Emergency Alarm Systems. Where emergency warning systems other than for fire are provided in *public use* or *common use* areas, a system with both audible and visual signals shall be provided.

Advisory F215.2
Facility alarm systems (other than fire alarm systems) that do not instruct occupants to evacuate the *facility*, such as those used for tornado warnings and other emergencies, must provide both audible and visual notification, but are not held to the technical criteria for alarms in section 702. Such alarms need to be differentiated in their signal from fire alarms systems.

F216 Signs

F216.1 General. *Signs* shall be provided in accordance with F216 and shall comply with 703.

EXCEPTION: In detention and correctional *facilities*, *signs* not located in *public use* areas shall not be required to comply.

F216.2 Permanent Designations. Where exterior *signs* are provided as permanent designations of permanent interior rooms and *spaces* at the door to the *space* they serve, the *signs* shall be *tactile* and shall comply with 703.2. Where interior *signs* are provided as permanent designations of permanent interior rooms and *spaces*, the *signs* shall be *tactile* and shall comply with 703.2. Where *pictograms* are provided as permanent designations of permanent interior rooms and *spaces*, the *pictograms* shall comply with 703.6 and shall have *tactile* text descriptors complying with 703.2.

Advisory F216.2
"Permanent designations" label interior rooms or *spaces* where the designation is not likely to change over time. Examples include, interior signs labeling restrooms, room and floor numbers or letters, and room names. *Tactile* text descriptors are required for *pictograms* that are provided to label or identify a permanent room or *space*. *Pictograms* that provide information about a room or *space*, such as "no smoking," occupant logos, and accessibility designations, are not required to have text descriptors.

EXCEPTION: This requirement shall not apply to signs used to designate *building* addresses or *building* or *facility* names.

F216.3 Directional and Informational Signs. *Signs* that provide direction to or information about permanent interior *spaces* and *facilities* of the *site* shall comply with 703.4.

Advisory F216.3
Information about a permanent room or space includes rules of conduct, occupant load, and similar *signs*. *Signs* providing direction to permanent rooms or spaces include those that identify egress routes.

EXCEPTION: *Building* directories, menus, and temporary *signs* are not required to comply with 703.4.

F216.4 Exit Doors. Exit doors shall be identified by *tactile signs* complying with 703.2.

F217 Telephones

F217.1 General. Where coin-operated public pay telephones, coinless public pay telephones, public *closed-circuit telephones*, or other types of public telephones are provided, *accessible* public telephones shall be provided in accordance with F217 for each type of public telephone provided. For purposes of this section, a bank of telephones shall be considered two or more adjacent telephones.

F217.2 Wheelchair Accessible Telephones. Where public telephones are provided, *wheelchair accessible* telephones complying with 704.2 shall be provided in accordance with Table F217.2.

Table F217.2 Wheelchair Accessible Telephones

Number of Telephones Provided on a Floor or Level	Minimum Required Number of Wheelchair Accessible Telephones
1 or more single units	1 per floor or level
1 bank	1 per floor or level
2 or more banks	1 per bank[1]

1. At Least one telephone per floor shall provide a forward approach complying with 704.2.1.2, except for exterior installations where dial tone first service is available.

F217.3 Volume Controls. All *wheelchair accessible* telephones required by F217.2 and 25 percent, but not less than one, of all other public telephones provided shall have volume control complying with 704.3. Such telephones shall be identified by *signs* containing *pictograms* of a telephone handset with radiating sound waves complying with 703.7.

EXCEPTION: *Pictograms* are not required where all public telephones have volume control.

F217.4 TTYs. *TTYs* complying with 704.4 shall be provided in accordance with F217.4.

Advisory F217.4
Separate requirements are provided based on the number of public pay telephones provided at a bank of telephones, within a floor, a *building*, or on a site. One *TTY* can be used to satisfy more than one of these requirements. For example, a *TTY* required for a *building* can be used to satisfy the requirement for at least one *TTY* on a site. Consideration should be given to phone systems that can accommodate both digital and analog transmissions for compatibility with digital and analog *TTYs*.

F217.4.1 Bank Requirement. Where four or more public pay telephones are provided at a bank of telephones, at least one public *TTY* shall be provided at that bank.

EXCEPTION: *TTYs* are not required at banks of telephones located within 200 feet (61 m) of, and on the same floor as, a bank containing a public *TTY*.

F217.4.2 Floor Requirement. Where at least one public pay telephone is provided on a floor of a *building*, at least one public *TTY* shall be provided on that floor.

F217.4.3 Building Requirement. Where at least one public pay telephone is provided in a *public use* area of a *building*, at least one public *TTY* shall be provided in the *building* in a *public use* area.

F217.4.4 Site Requirement. Where four or more public pay telephones are provided on a *site*, at least one public *TTY* shall be provided on the *site*.

F217.4.5 Rest Stops, Emergency Roadside Stops, and Service Plaza. Where a public pay telephone is provided at a public rest stop, emergency roadside stop or service plaza, at least one public *TTY* shall be provided.

F217.4.6 Hospitals. Where a public pay telephone is provided serving a hospital emergency room, hospital recovery room, or hospital waiting room, at least one public *TTY* shall be provided at each such location.

F217.4.7 Transportation Facilities. Transportation *facilities* shall be provided with *TTYs* in accordance with 1003.2.6 and 1004.2, in addition to the *TTYs* required by F217.4.

F217.4.8 Detention and Correctional Facilities. In detention and correctional *facilities*, where a public pay telephone is provided in a secured area used only by detainees or inmates and security personnel, then at least one *TTY* shall be provided in at least one such area.

F217.4.9 Signs. Identification and directional *signs* shall be provided in accordance with F217.4.9.

F217.4.9.1 Identification Signs. Public *TTYs* shall be identified by the International Symbol of *TTY* complying with 703.7.

F217.4.9.2 Directional Signs. Directional *signs* indicating the location of the nearest public *TTY* shall be provided at all banks of public pay telephones not containing a public *TTY*. In addition, where *signs* provide direction to public pay telephones, they shall also provide direction to public *TTYs*. Directional *signs* shall comply with 703.4 and shall include the International Symbol of *TTY* complying with 703.7.

F217.5 Shelves for Portable TTYs. Where a bank of telephones in the interior of a *building* consists of three or more public pay telephones, at least one public pay telephone at the bank shall be provided with a shelf and an electrical outlet in accordance with 704.5.

EXCEPTIONS: 1. This requirement does not apply to the secured areas of detention and correctional *facilities* where shelves and outlets are prohibited for purposes of security or safety.
2. The shelf and electrical outlet shall not be required at a bank of telephones with a *TTY*.

F218 Transportation Facilities

F218.1 General. Transportation *facilities* shall comply with Chapter 10.

F219 Assistive Listening Systems

F219.1 General. Assistive listening systems shall be provided in accordance with F219 and shall comply with 706.

F219.2 Required Systems. In each *assembly area* where audible communication is integral to the use of the *space*, an assistive listening system shall be provided.

EXCEPTION: Other than in courtrooms, this requirement shall not apply where there is no audio amplification.

F219.3 Receivers. Receivers complying with 706.3 shall be provided for assistive listening systems in accordance with Table F219.3. Twenty five percent minimum of receivers, but not less than two, shall be hearing-aid compatible in accordance with 706.4.

Table F219.3 Receivers for Assistive Listening Systems

Capacity of Seating in Assembly Area	Minimum Required Number of Receivers	Minimum Number of Required Receivers Required to be Hearing-aid Compatible
50 or less	2	2
51 to 200	2 plus 1 per 25 seats over 50 seats[1]	2
201 to 500	2 plus 1 per 25 seats over 50 seats[1]	1 per 4 receivers[1]
501 to 1000	20 plus 1 per 33 seats over 500 seats[1]	1 per 4 receivers[1]
1001 to 2000	35 plus 1 per 50 seats over 1000 seats[1]	1 per 4 receivers[1]
2001 and over	55 plus 1 per 100 seats over 2000 seats[1]	1 per 4 receivers[1]

1. or fraction thereof

F219.4 Signs. Where assistive listening systems are provided, *signs* shall be provided to inform patrons of the availability of the system. The *signs* shall be located at ticket offices or windows, where ticket offices or windows are provided. The *signs* shall comply with 703.4 and shall include the International Symbol of Access for Hearing Loss complying with 703.7.

F220 Automatic Teller Machines and Fare Machines

F220.1 General. Where automatic teller machines or self-service fare vending, collection, or adjustment machines are provided, at least one machine of each type at each location where such machines are provided shall comply with 707. Where bins are provided for envelopes, waste paper, or other purposes, at least one of each type shall comply with 905.

F221 Assembly Seating

F221.1 General. In a motion picture house, theater, concert hall, stadium, arena, auditorium, convention center, lecture hall, courtroom, legislative chamber, public meeting room, hearing room, or similar *assembly area* that contains seating, *wheelchair spaces*, companion seats, and designated aisle seats shall be provided and shall comply with F221 and 802 in each type of seating area.

F221.2 Wheelchair Spaces. *Wheelchair spaces* shall be provided in all *facilities* identified in F221.1 and in each luxury box, club box, and suite within these *facilities*. *Wheelchair spaces* shall be integrated throughout these seating areas.

F221.2.1 Number. *Wheelchair spaces* shall be provided in accordance with Table F221.2.1.

Table F221.2.1 Number of Wheelchair Spaces

Number of Seats[1]	Minimum Required Number of Wheelchair Spaces
4 to 25	1
26 to 50	2
51 to 150	4
151 to 300	5
301 to 500	6
501 and over	6, plus 1 for each 100, or fraction thereof, over 500

1. installed seats plus required *wheelchair spaces*

F221.3 Readily Removable Companion Seats. One readily removable companion seat complying with 802.7 shall be provided for each *wheelchair space*. Each required readily removable companion

seat shall provide an additional *wheelchair space* complying with 802.1, 802.2, 802.3, 802.4, 802.5, and 802.9 when removed.

EXCEPTIONS: 1. Existing companion seats shall be permitted to be fixed and shall not be required to provide *wheelchair spaces*.
2. Companion seats shall be permitted to be fixed and shall not be required to provide wheelchair *spaces* where the seating capacity is 300 or fewer.

F221.4 Designated Aisle Seats. Aisle seats complying with 802.8 shall be provided in all *assembly areas*. *Signs* notifying patrons of the availability of such seats shall be posted at the ticket office.

EXCEPTION: Designated aisle seats are not required in luxury boxes, club boxes, or suites.

F221.4.1 Number. One designated aisle seat complying with 802.8 per 100 seats, or fraction thereof shall be provided.

F221.4.2 Location. At least one of each four required designated aisle seats shall be located on an *accessible route*. All other required designated aisle seats shall be located not more than two rows from an *accessible route* serving such seats.

F221.5 Vertical Access. Where *wheelchair spaces* or designated aisle seats share a common *accessible route* that includes vertical access by means of elevators or platform lifts, elevators or platform lifts shall be provided in such number, capacity, and speed as to provide a level of service equivalent to that provided in the same seating area to patrons who can use stairs or other means of vertical access.

F222 Dressing, Fitting, and Locker Rooms

F222.1 General. Where dressing rooms, fitting rooms, or locker rooms are provided, at least 5 percent, but not less than one, of each type of use in each cluster provided shall comply with 803.

EXCEPTION: In *alterations*, where it is *technically infeasible* to provide *accessible* rooms in accordance with F222.1, one room for each sex on each level shall be *accessible*. Where only unisex rooms are provided, an *accessible* unisex room shall be permitted.

F223 Medical Care Facility Patient or Resident Sleeping Rooms

F223.1 General. In licensed medical and long-term care *facilities* where people receive physical or medical treatment or care and where the period of stay exceeds twenty-four hours, *accessible* patient or resident sleeping rooms shall be provided in accordance with F223 and shall comply with 805.

F223.1.1 Alterations. Where sleeping rooms are *altered* or *added*, the requirements of F223 shall apply only to the sleeping rooms being *altered* or *added* until the number of *accessible* sleeping rooms complies with the minimum number required for new construction.

Advisory F223.1.1
In *alterations* and *additions*, the minimum required number is based on the total number of sleeping rooms altered or added instead of on the total number of sleeping rooms provided in a *facility*. As a *facility* is altered over time, *accessible* sleeping rooms may be dispersed among patient care areas such as pediatrics, cardiac care, maternity, and other units. In this way, people with disabilities may have access to the full-range of services provided by a medical care *facility*.

F223.2 Hospitals. In general purpose hospitals, psychiatric *facilities* and detoxification *facilities*, at least 10 percent, but not less than one, of the patient sleeping rooms shall be *accessible*.

F223.3 Rehabilitation Facilities. In hospitals and rehabilitation *facilities* that specialize in treating conditions that affect mobility, and in units within hospitals and rehabilitation *facilities* which specialize in treating conditions that affect mobility, 100 percent of the patient sleeping rooms shall be *accessible*.

Advisory F223.3
Conditions that affect mobility include conditions requiring the use or assistance of a brace, cane, crutch, prosthetic device, *wheelchair*, or powered mobility aid; arthritic, neurological, or orthopedic conditions that severely limit one's ability to walk; respiratory diseases and other conditions which may require the use of portable oxygen; and cardiac conditions that impose significant functional limitations. *Facilities* that may provide, but that do not specialize, in the treatment of such conditions, such as general rehabilitation hospitals, are not subject to this requirement but are subject to section F223.2.

F223.4 Long Term Care Facilities. In long term care *facilities*, at least 50 percent, but not less than one, of the resident sleeping rooms shall be *accessible*.

F224 Transient Lodging Guest Rooms

F224.1 General. *Transient lodging facilities* shall provide guest rooms in accordance with F224.

F224.1.1 Alterations. Where guest rooms are *altered* or *added*, the requirements of F224 shall apply only to the guest rooms being *altered* or *added* until the number of *accessible* guest rooms complies with the minimum number required for new construction.

Advisory F224.1.1

In *alterations* and *additions*, the minimum required number of *accessible* guest rooms is based on the total number of guest rooms altered or added instead of the total number of guest rooms provided in a *facility*. Typically, each *alteration* of a *facility* is limited to a particular portion of the *facility*. When *accessible* guest rooms are added as a result of subsequent *alterations*, compliance with F224.5 is likely to be achieved.

F224.1.2 Guest Room Doors and Doorways. *Entrance* and passage doors and doorways into and within all guest rooms shall provide clear width complying with 404.2.3.

Advisory F224.1.2

Because of the social interaction that often occurs in lodging *facilities*, an *accessible* clear opening width is required for doors and doorways to and within all guest rooms, including those not required to be *accessible*. This applies to all doors, including bathroom doors, that allow full passage. Other requirements for doors and doorways in section 404 do not apply to guest rooms not required to be *wheelchair accessible*.

F224.2 Accessible Guest Rooms. In *transient lodging facilities*, *accessible* guest rooms shall be provided in accordance with Table F224.2 and shall comply with 806.2

Table F224.2 Accessible Guest Rooms

Total Number of Guest Rooms Provided	Minimum Required Number of Accessible Rooms Without Roll-in Showers	Minimum Required Number of Accessible Rooms With Roll-in Showers	Total Number of Required Accessible Rooms
1 to 25	1	0	1
26 to 50	2	0	2
51 to 75	3	1	4
76 to 100	4	1	5
101 to 150	5	2	7
151 to 200	6	2	8

Table F224.2 Accessible Guest Rooms

Total Number of Guest Rooms Provided	Minimum Required Number of Accessible Rooms Without Roll-in Showers	Minimum Required Number of Accessible Rooms With Roll-in Showers	Total Number of Required Accessible Rooms
201 to 300	7	3	10
301 to 400	8	4	12
401 to 500	9	4	13
501 to 1000	2 percent of total	1 percent of total	3 percent of total
1001 and over	20 plus 1 for each 100, or fraction thereof, over 1000	10 plus 1 for each 100, or fraction thereof, over 1000	30 plus 2 for each 100, or fraction thereof, over 1000

F224.3 Accessible Beds. In rooms or *spaces* having four or more beds, the number of beds in the room or *space* required to have clear floor *space* complying with 806.2.3 shall comply with Table F224.3.

Table F224.3 Accessible Beds

Total Number of Beds in a Guest Room	Minimum Required Number of Accessible Beds
4 to 25	1
26 to 50	2
51 to 75	4
76 to 100	5
101 to 150	7
151 to 200	8
201 to 300	10
301 to 400	12
401 to 500	13
501 to 1000	3 percent of total
1001 and over	30 plus 1 for each 100, or fraction thereof, over 1000

F224.4 Communication Features. In *transient lodging facilities*, at least fifty percent of the total number of guest rooms shall have *accessible* communication features complying with 806.3.

F224.5 Dispersion. Fifty percent, but not less than one, of the guest rooms required to comply with 806.2 shall also comply with 806.3. Guest rooms required to comply with 806.2 and guest rooms required to comply with 806.3 shall be dispersed among the various classes of guest rooms and shall provide choices of types of rooms, types of beds, and other amenities comparable to the choices provided to other guests. Where the minimum number of rooms or beds required to be *accessible* is not sufficient to allow for complete dispersion, rooms or beds shall be dispersed in the following priority: room type, bed type, and amenities.

Advisory F224.5
Factors to be considered in providing an equivalent range of options may include, but are not limited to, room size, bed size, cost, view, bathroom fixtures such as hot tubs and spas, smoking and nonsmoking, the number of beds, and the number of rooms provided.

F225 Self-Service Storage Facilities

F225.1 General. *Self-service storage facilities* shall provide *accessible* individual, self-storage *spaces* in accordance with Table F225.1.

Table F225.1 Accessible Self-Service Storage Facilities

Total Spaces in Facility	Minimum Required Number of Accessible Spaces
1 to 200	5 percent, but not less than 1
201 and over	10 plus 2 percent of total number of units over 200

F225.2 Dispersion. *Accessible* individual, self-service storage *spaces* shall be dispersed throughout the various classes of *spaces* provided. Where more classes of *spaces* are provided than the number of required *accessible spaces*, the number of *accessible spaces* shall not be required to exceed that required by Table F225.1. *Accessible spaces* shall be permitted to be dispersed in a single *building* of a multi-building *facility*.

F226 Dining Surfaces and Work Surfaces

F226.1 General. Where dining surfaces and work surfaces are provided in *accessible spaces*, at least five percent, but not less than one, of the seating and standing *spaces* at the dining surfaces and work surfaces in a room or *space* shall comply with 902.

F226.2 Dispersion. *Accessible* dining surfaces and work surfaces shall be distributed throughout the *space* or *facility* containing such *elements*.

F227 Sales and Service Counters

F227.1 General. Where sales or service counters are provided, they shall be *accessible* in accordance with F227.

F227.2 Check-Out Aisles. Where check-out aisles are provided, *accessible* check-out aisles shall be provided in accordance with Table F227.2. Where check-out aisles serve different functions, at least one *accessible* check-out aisle shall be provided for each function. Where check-out aisles are dispersed throughout the *building* or *facility*, *accessible* check-out aisles also shall be dispersed. Check-out aisles required to be *accessible* shall comply with 904.3.

EXCEPTION: Where check-out aisles are *altered* in *facilities,* at least one of each check-out aisle serving each function shall be made *accessible* until the number of *accessible* check-out aisles complies with F227.2.

Table F227.2 Accessible Check-Out Aisles

Total Check-Out Aisles of Each Function	Minimum Required Number of Accessible Check-Out Aisles of Each Function
1 to 4	1
5 to 8	2
9 to 15	3
16 and over	3 plus 20 percent of additional aisles

F227.2.1 Identification. *Accessible* check-out aisles shall be identified by the International Symbol of Accessibility complying with 703.7, unless all check-out aisles in the *facility* are *accessible*. The *sign* shall be above the check-out aisle in the same location as the check-out aisle number or type of check-out identification.

F227.3 Point of Sales and Service Counters. Where point of sales and service counters are provided for sales or distribution of goods or services, at least one of each type provided shall comply with 904.4.

Where such counters are dispersed throughout the *building* or *facility*, the *accessible* counters also shall be dispersed.

Advisory F227.3
Types of counters that provide different services in the same *facility* include, but are not limited to, order, pick-up, express, and returns. One continuous counter can be used to provide different types of service. For example, order and pick-up are different services. It would not be acceptable to provide access only to the part of the counter where orders are taken when orders are picked-up at a different location on the same counter. Both the order and pick-up section of the counter must be *accessible*.

F227.4 Food Service Lines. Food service lines shall comply with 904.5. Where self-service shelves are provided, at least 50 percent, but not less than one, of each type provided shall comply with 308.

F227.5 Queues and Waiting Lines. Queues and waiting lines servicing *accessible* counters or check-out aisles shall comply with 403.

F228 Storage

F228.1 General. Where storage *elements* are provided in *accessible spaces*, at least one of each type shall comply with 905.

Advisory F228.1
Fixed or built-in storage *elements* include, but are not limited to, closets, cabinets, shelves, and drawers.

F228.2 Lockers. Where lockers are provided in *accessible spaces*, at least five percent, but not less than one, of each type shall comply with 905.

F228.3 Self-Service Shelving. Self-service shelves shall be located on an *accessible route* complying with 402. Self-service shelving shall not be required to comply with reach range provisions of 308.

Advisory F228.3
Self-service shelves include, but are not limited to, library, store, or post office shelves.

F228.4 Coat Hooks and Folding Shelves. Where coat hooks or folding shelves are provided in inaccessible toilet rooms, toilet compartments, or in dressing, fitting or locker rooms, at least one of each type shall be provided in *accessible* toilet rooms, toilet compartments or dressing, fitting and locker rooms.

F229 Depositories, Vending Machines, Change Machines, and Mail Boxes

F229.1 Depositories, Vending Machines, and Change Machines. Where provided, at least one of each type of depository, vending machine, and change machine shall comply with 309.

Advisory F229.1
Depositories include, but are not limited to, night receptacles in banks, post offices, video stores, and libraries.

EXCEPTION: Drive-up-only depositories shall not be required to comply with this section.

F229.2 Mail Boxes. Where *mail boxes* are provided in an interior location, at least 5 percent, but not less than one, of each type shall comply with 309. In residential *facilities*, where *mail boxes* are provided for each *dwelling unit*, *mail boxes* complying with 309 shall be provided for each *dwelling unit* required to be *accessible* by F234.1.1.

F230 Windows

F230.1 Windows. Where glazed openings are provided in *accessible* rooms or *spaces* for operation by the occupants, at least one opening shall comply with 309. In accessible rooms or *spaces,* each glazed opening required by the *administrative authority* to be operable shall comply with 309.

F231 Two-Way Communication Systems

F231.1 General. Where a two-way communication system is provided to gain admittance to a *building* or *facility* or to restricted areas within a *building* or *facility*, the system shall comply with 708.

F232 Judicial Facilities

F232.1 General. Judicial *facilities* shall comply with F232.

F232.2 Courtrooms. Each courtroom shall comply with F232.2.

F232.2.1 Raised or Depressed Areas. Where provided, areas that are raised or depressed and accessed by *ramps* or *wheelchair* (platform) lifts with entry *ramps* shall provide unobstructed turning *space* complying with 304.

F232.2.2 Jury Boxes and Witness Stands. Each jury box and witness stand shall have, within its defined area, clear floor *space* complying with 305.

EXCEPTION: In *alterations*, *accessible wheelchair spaces* are not required to be located within the defined area of raised jury boxes or witness stands and shall be permitted to be located outside these *spaces* where *ramp* or lift access poses a hazard by restricting or projecting into a *means of egress* required by the appropriate *administrative authority*.

F232.2.3 Judges' Benches and Courtroom Stations. Judges' benches, clerks' stations, bailiffs' stations, deputy clerks' stations, court reporters' stations and litigants' and counsel stations shall comply with 902.

F232.3 Holding Cells. Where provided, central holding cells and court-floor holding cells shall comply with F232.3.

F232.3.1 Central Holding Cells. Where separate central holding cells are provided for adult male, juvenile male, adult female, or juvenile female, one of each type shall comply with 807. Where central-holding cells are provided and are not separated by age or sex, at least one cell complying with 807.2 shall be provided.

F232.3.2 Court-Floor Holding Cells. Where separate court-floor holding cells are provided for adult male, juvenile male, adult female, or juvenile female, each courtroom shall be served by one cell of each type complying with 807. Where court-floor holding cells are provided, which are not separated by age or sex, courtrooms shall be served by at least one cell complying with 807.2. Cells may serve more than one courtroom.

F232.4 Visiting Areas. Visiting areas shall comply with F232.4.

F232.4.1 Cubicles and Counters. At least five percent, but not less than one, of cubicles shall comply with 902 on both the visitor and detainee sides. Where counters are provided, at least one shall comply with 904.4.2 on both the visitor and detainee sides.

EXCEPTION: This requirement shall not apply to the detainee side of cubicles or counters at non-contact visiting areas not serving accessible holding cells.

F232.4.2 Partitions. Solid partitions or security glazing that separate visitors from detainees shall comply with 904.6.

F233 Detention and Correctional Facilities

F233.1 General. *Buildings*, *facilities*, or portions thereof, in which people are detained for penal or correction purposes, or in which the liberty of the inmates is restricted for security reasons shall comply with F233.

Advisory F233.1
Detention *facilities* include, but are not limited to, jails, detention centers, and holding cells in police stations. Correctional *facilities* include, but are not limited to, prisons, reformatories, and correctional centers.

F233.2 General Holding Cells and General Housing Cells or Rooms. *Accessible* general holding cells and *accessible* general housing cells or rooms shall be provided in accordance with F233.2.

Advisory F233.2
Accessible cells or rooms should be dispersed among different levels of security, housing categories, and holding classifications (e.g., male/female and adult/juvenile) to facilitate access. Many detention and correctional *facilities* are designed so that certain areas (e.g., "shift" areas) can be adapted to serve as different types of housing according to need. For example, a shift area serving as a medium-security housing unit might be redesignated for a period of time as a high-security housing unit to meet capacity needs. Placement of *accessible* cells or rooms in shift areas may allow additional flexibility in meeting requirements for dispersion of *accessible* cells or rooms.

EXCEPTION: Altered cells or rooms shall be *accessible* in accordance with regulations issued by the appropriate Federal agency having authority under section 504 of the Rehabilitation Act of 1973.

F233.2.1 Accessible Cells or Rooms. At least two percent, but not less than one, of the total number of cells or rooms in a *facility* shall comply with 807.2.

F233.2.2 Accessible Beds. In cells or rooms having four or more beds, the number of beds in the cell or room required to have clear floor *space* complying with 807.2 shall comply with Table F224.3.

F233.2.3 Communication Features. At least two percent, but not less than one, of the total number of cells or rooms equipped with audible emergency alarm systems or permanently installed telephones within the cell or room shall comply with 807.3.

F233.2.4 Dispersion. Fifty percent, but not less than one, of the cells or rooms required to comply with 807.2 shall also comply with 807.3.

F233.3 Special Holding Cells and Special Housing Cells or Rooms. Where special holding cells or special housing cells or rooms are provided, at least one serving each purpose shall comply with 807.2. Cells or rooms subject to this requirement include, but are not limited to those used for purposes of orientation, protective custody, administrative or disciplinary detention or segregation, detoxification, and medical isolation.

EXCEPTIONS: 1. Cells or rooms specially designed without protrusions and that are used solely for purposes of suicide prevention shall not be required to comply with 604.5.
2. Altered cells or rooms shall be *accessible* in accordance with regulations issued by the appropriate Federal agency having authority under section 504 of the Rehabilitation Act of 1973.

F233.4 Medical Care Facilities. Patient bedrooms or cells required to be *accessible* by F223 shall be provided in addition to any medical isolation cells required to be *accessible* under F233.3.

F233.5 Visiting Areas. Visiting areas shall comply with F233.5.

F233.5.1 Cubicles and Counters. At least five percent, but not less than one, of cubicles shall comply with 902 on both the visitor and detainee sides. Where counters are provided, at least one shall comply with 904.4.2 on both the visitor and detainee or inmate sides.

EXCEPTION: This requirement shall not apply to the inmate or detainee side of cubicles or counters at non-contact visiting areas not serving *accessible* holding or housing cells or rooms.

F233.5.2 Partitions. Solid partitions or security glazing that separate visitors from detainees shall comply with 904.6.

F234 Accessible Residential Facilities

F234.1 General. Residential *facilities* shall provide *dwelling units* in accordance with F234.

Advisory F234.1
This section outlines the requirements for residential *facilities* subject to the Architectural Barriers Act of 1968. The *facilities* covered by this section, as well as other *facilities* not addressed or covered by these sections, may still be subject to other Federal laws such as the Fair Housing Act (42 U.S.C. 3604 et. seq.) and Section 504 of the Rehabilitation Act of 1973 (29 U.S.C. 794). For example, the Fair Housing Act requires that all residential *buildings* having four or more units, regardless of whether they are privately owned or federally assisted, include certain features of *accessible* and adaptable design according to guidelines established by the U. S. Department of Housing and Urban Development (HUD). Further information on these laws and the appropriate regulations should be consulted before proceeding with the design and construction of residential housing which may be covered by such laws.

F234.1.1 Accessible Dwelling Units. In residential *facilities*, at least five percent, but not less than one unit, of the total number of *dwelling units* in a *facility* shall comply with 1101 and 1102.

EXCEPTION: Where residential *facilities* contain four or less *dwelling units*, at least five percent, but not less than one unit, of the total number of *dwelling units* in the *project* shall comply with 1101 and 1102.

F234.1.2 Accessible Dwelling Units, Alterations. Where dwelling units are *altered* or *added*, the requirements of F234 shall apply only to the *dwelling units* being *altered* or *added* until the number of *accessible dwelling units* complies with the minimum number required for new construction.

F234.1.3 Communication Features. In residential *facilities,* at least two percent, but not less than one unit, of the total number of *dwelling units* in a *facility* shall comply with 1101 and 1103.

EXCEPTION: Where residential *facilities* contain four or less *dwelling units*, at least two percent, but not less than one unit, of the total number of *dwelling units* in the *project* shall comply with 1101 and 1103.

F234.1.4 Communication Features, Alterations. Where *dwelling units* are *altered* or *added*, the requirements of F234 shall apply only to the *dwelling units* being *altered* or *added* until the number of *dwelling units* with *accessible* communication features complies with the minimum number required for new construction.

F234.1.5 Dispersion. *Dwelling units* required to comply with 1102 and *dwelling units* required to comply with 1103 shall be dispersed among the various types of *dwelling units* in the *facility* and shall provide choices of *dwelling units* comparable to and integrated with those available to other residents.

EXCEPTION: Single level *dwelling units* shall be permitted where *spaces* and amenities are equivalent to those provided in multi-level *dwelling units*.

TABLE OF CONTENTS

CHAPTER 3: BUILDING BLOCKS 3
301 General 3
302 Floor or Ground Surfaces 3
303 Changes in Level 4
304 Wheelchair Turning Space 5
305 Clear Floor or Ground Space 7
306 Knee and Toe Clearance 9
307 Protruding Objects 11
308 Reach Ranges 14
309 Operable Parts 17

CHAPTER 4: ACCESSIBLE ROUTES. 19
401 General 19
402 Accessible Routes 19
403 Walking Surfaces 19
404 Doors and Doorways 21
405 Ramps 30
406 Curb Ramps 33
407 Elevators 36
408 Wheelchair (Platform) Lifts 54
409 Accessible Means of Egress 55
410 Areas of Refuge 55

CHAPTER 5: GENERAL SITE AND BUILDING ELEMENTS 59
501 General 59
502 Parking Spaces 59
503 Passenger Loading Zones 61
504 Stairways 62
505 Handrails 63

CHAPTER 6: PLUMBING ELEMENTS AND FACILITIES. 69
601 General 69
602 Drinking Fountains and Water Coolers 69
603 Toilet and Bathing Rooms 71
604 Water Closets and Toilet Compartments 72
605 Urinals 82
606 Lavatories and Sinks 83
607 Bathtubs 84
608 Shower Compartments 87
609 Grab Bars 93

TABLE OF CONTENTS TECHNICAL

610 Seats 94
611 Laundry Equipment 97

CHAPTER 7: COMMUNICATION ELEMENTS AND FEATURES 99
701 General 99
702 Fire Alarm Systems 99
703 Signs 109
704 Telephones 120
705 Detectable Warnings 122
706 Assistive Listening Systems 123
707 Automatic Teller Machines and Fare Machines 124
708 Two-Way Communication Systems 127

CHAPTER 8: SPECIAL ROOMS, SPACES, AND ELEMENTS 129
801 General 129
802 Wheelchair Spaces and Designated Aisle Seats in Assembly Areas 129
803 Dressing, Fitting, and Locker Rooms 132
804 Sinks, Kitchens, Kitchenettes, and Wet Bars 133
805 Medical Care Facility Patient or Resident Sleeping Rooms 134
806 Transient Lodging Guest Rooms 134
807 Holding Cells and Housing Cells or Rooms 135

CHAPTER 9: BUILT-IN FURNISHINGS AND EQUIPMENT 137
901 General 137
902 Dining Surfaces and Work Surfaces 137
903 Benches 138
904 Sales and Service Counters 139
905 Storage 143

CHAPTER 10: TRANSPORTATION FACILITIES 145
1001 General 145
1002 Bus Stops and Terminals 145
1003 Facilities and Stations 147
1004 Airports 152

CHAPTER 11: RESIDENTIAL FACILITIES 155
1101 General 155
1102 Accessible Dwelling Units 155
1103 Dwelling Units with Accessible Communication Features 167

CHAPTER 3: BUILDING BLOCKS

301 General

301.1 Scope. The provisions of this chapter apply where required by Chapter 2 or by Chapters 4 through 11.

302 Floor or Ground Surfaces

302.1 General. Floor and ground surfaces shall be stable, firm, and slip resistant and shall comply with 302.

Advisory 302.1
A stable surface is one that remains unchanged by contaminants or applied force, so that when the contaminant or force is removed, the surface returns to its original condition. A firm surface resists deformation by either indentations or particles moving on its surface. A slip-resistant surface provides sufficient frictional counterforce to the forces exerted in walking to permit safe ambulation.

302.2 Carpet. Carpet or carpet tile shall be securely attached and shall have a firm cushion, pad, or backing or no cushion or pad. Carpet or carpet tile shall have a level loop, textured loop, level cut pile, or level cut/uncut pile texture. Pile height shall be 1/2 inch (13 mm) maximum. Exposed edges of carpet shall be fastened to floor surfaces and shall have trim along the entire length of the exposed edge. Carpet edge trim shall comply with 303.

Figure 302.2

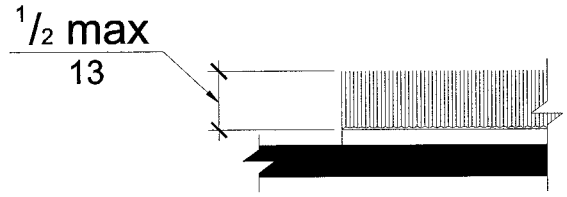

Advisory 302.2

Carpets and permanently affixed mats can significantly increase the amount of force (roll resistance) needed to propel a *wheelchair* over a surface. The firmer the carpeting and backing, the lower the roll resistance. A pile thickness up to 1/2 inch (13 mm) (measured to the backing, cushion, or pad) is allowed. although a lower pile provides easier *wheelchair* maneuvering. If a backing, cushion or pad is used, it must be firm. Preferably, carpet pad should not be used because the soft padding increases roll resistance.

302.3 Openings. Openings in floor or ground surfaces shall allow passage of a sphere not more than 1/2 inch (13 mm) diameter except as allowed in 407.4.7, 408, and 1003. Elongated openings shall be placed so that the long dimension is perpendicular to the dominant direction of travel.

Figure 302.3

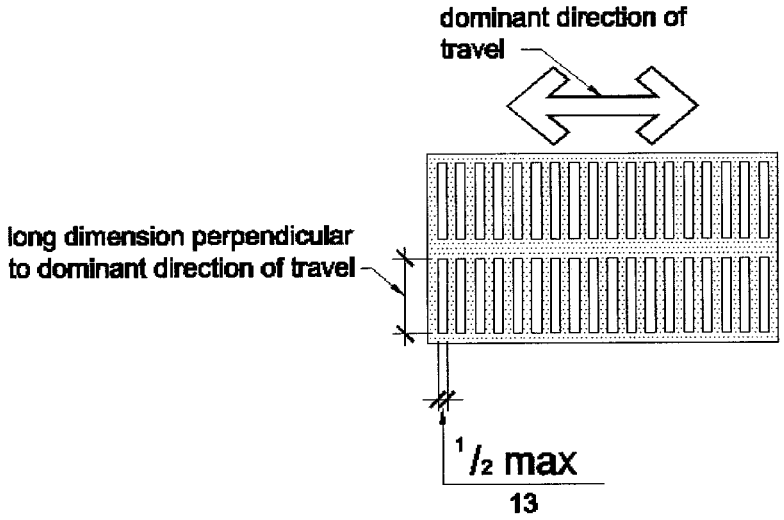

303 Changes in Level

303.1 General. Where changes in level are permitted in floor or ground surfaces, they shall comply with 303.

303.2 Vertical. Changes in level of 1/4 inch (6.4 mm) high maximum shall be permitted to be vertical.

Figure 303.2

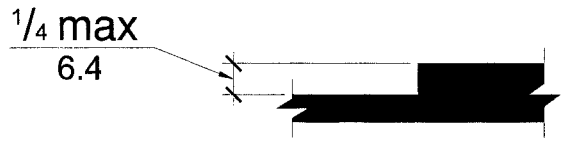

303.3 Beveled. Changes in level between 1/4 inch (6.4 mm) high minimum and 1/2 inch (13 mm) high maximum shall be beveled with a slope not steeper than 1:2.

Figure 303.3

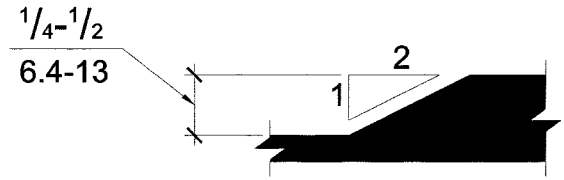

Advisory 303.3

The bevel should be applied to the entire level change.

303.4 Ramps. Changes in level greater than 1/2 inch (13 mm) high shall be ramped, and shall comply with 405 or 406.

304 Wheelchair Turning Space

304.1 General. *Wheelchair* turning *space* shall comply with 304.

304.2 Floor or Ground Surface. Floor or ground surfaces of a turning *space* shall comply with 302. Changes in level are not permitted.

EXCEPTION: Slopes not steeper than 1:48 shall be permitted.

304.3 Size. *Wheelchair* turning *space* shall comply with 304.3.1 or 304.3.2.

304.3.1 Circular Space. The *wheelchair* turning *space* shall be a *space* of 60 inches (1525 mm) diameter minimum. The *space* shall be permitted to include knee and toe clearance complying with 306.

Figure 304.3.1

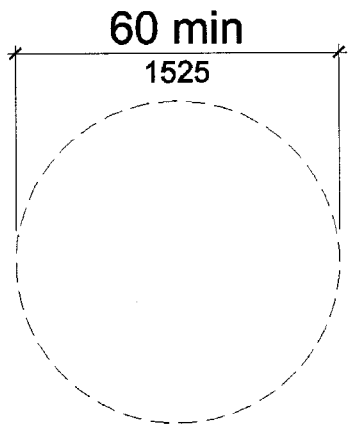

304.3.2 T-Shaped Space. The *wheelchair* turning *space* shall be a T-shaped *space* within a 60 inch (1525 mm) minimum square with arms and base 36 inches (915 mm) wide minimum. Each arm of the T shall be clear of obstructions 12 inches (305 mm) minimum in each direction and the base shall be clear of obstructions 24 inches (610 mm) minimum. Such *space* shall be permitted to include knee and toe clearance complying with 306 only at the end of either the base or one arm.

Figure 304.3.2

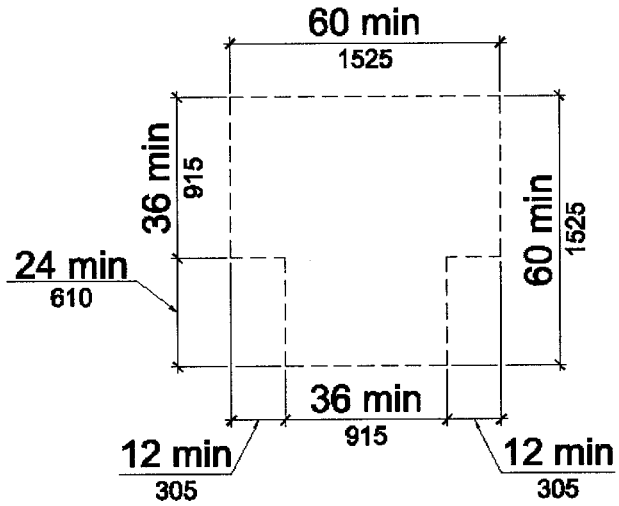

304.4 Doors. Doors shall be permitted to swing into a *wheelchair* turning *space* unless otherwise specified.

305 Clear Floor or Ground Space

305.1 General. Clear floor or ground *space* shall comply with 305.

305.2 Floor or Ground Surfaces. Floor or ground surfaces of a clear floor or ground *space* shall comply with 302. Changes in level are not permitted.

EXCEPTION: Slopes not steeper than 1:48 shall be permitted.

305.3 Size. The clear floor or ground *space* shall be 30 inches (760 mm) minimum by 48 inches (1220 mm) minimum.

Figure 305.3

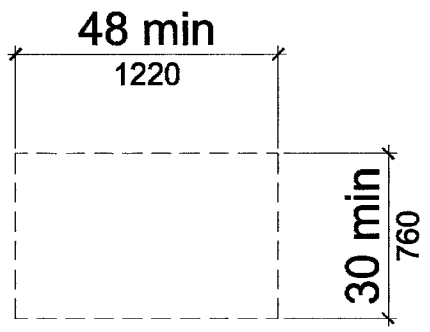

305.4 Knee and Toe Clearance. Unless otherwise specified, clear floor or ground *space* shall be permitted to include knee and toe clearance complying with 306.

305.5 Position. Unless otherwise specified, clear floor or ground *space* shall be positioned for either forward or parallel approach to an *element*.

305.6 Approach. One full unobstructed side of the clear floor or ground *space* shall adjoin or overlap an *accessible route* or adjoin another clear floor or ground *space*.

Figure 305.6

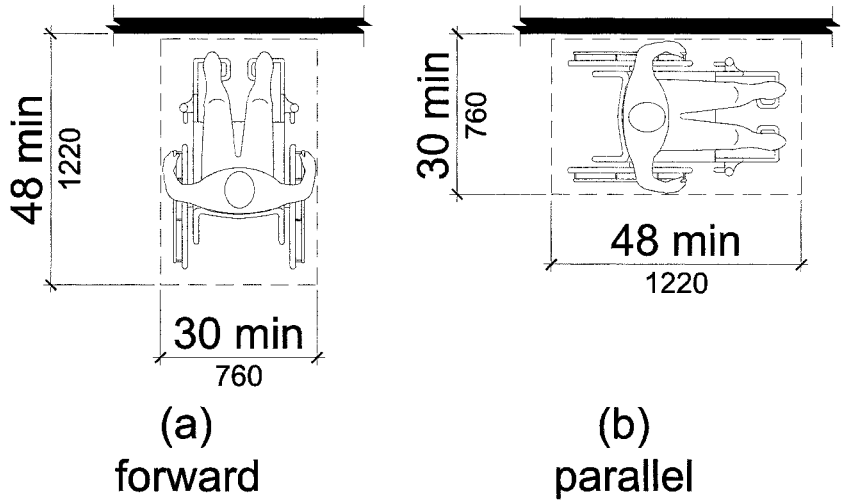

305.7 Maneuvering Clearance. Where a clear floor or ground *space* is located in an alcove or otherwise confined on all or part of three sides, additional maneuvering clearance complying with 305 shall be provided in accordance with 305.7.1 and 305.7.2.

305.7.1 Forward Approach. Where the depth of the alcove or other confined area exceeds 24 inches (610 mm), the width of the clear floor *space* shall be 36 inches (915 mm) minimum.

Figure 305.7.1

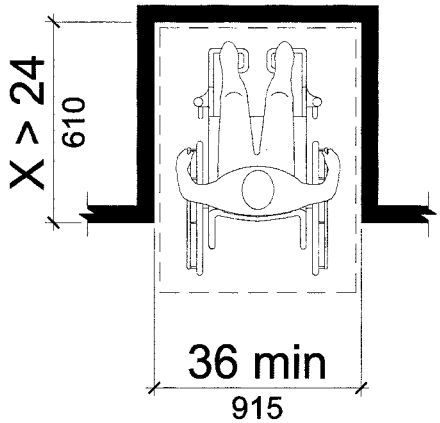

305.7.2 Parallel Approach. Where the depth of the alcove or other confined area exceeds 15 inches (380 mm), the length of the clear floor *space* shall be 60 inches (1525 mm) minimum.

Figure 305.7.2

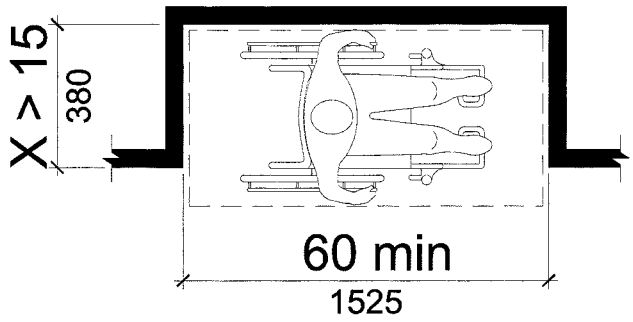

306 Knee and Toe Clearance

306.1 General. Where *space* beneath an object is included as part of clear floor or ground *space* or *wheelchair* turning *space*, the *space* shall comply with 306. Additional *space* shall not be prohibited beneath an object; however, such additional *space* shall not be considered as part of the clear floor or ground *space* or *wheelchair* turning *space*.

Advisory 306.1
Clearances are measured in relation to the usable clear floor space, not necessarily to the vertical support for an element. When determining clearance under an object for required turning or maneuvering space, care should be taken to ensure the space is clear of any obstructions.

306.2 Toe Clearance.

Figure 306.2

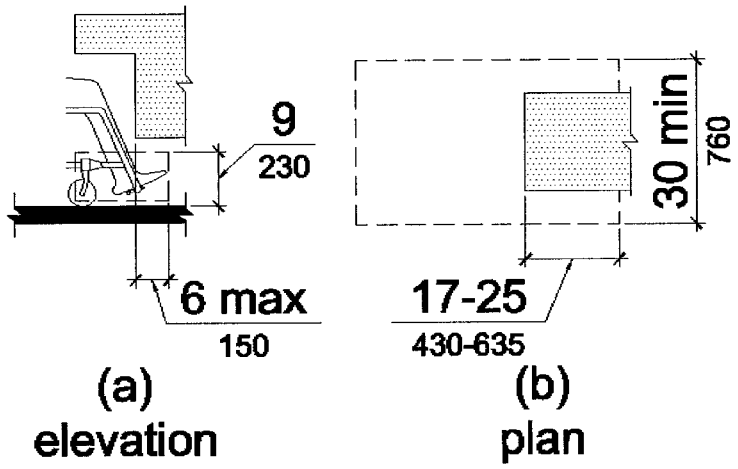

306.2.1 General. *Space* under an object between the floor or ground and 9 inches (230 mm) above the floor or ground shall be considered toe clearance and shall comply with 306.2.

306.2.2 Maximum Depth. Toe clearance shall extend 25 inches (635 mm) maximum under an object.

306.2.3 Minimum Required Depth. Where toe clearance is required at an *element* as part of a clear floor *space*, the toe clearance shall extend 17 inches (430 mm) minimum under the *element*.

306.2.4 Additional Clearance. *Space* extending greater than 6 inches (150 mm) beyond the available knee clearance at 9 inches (230 mm) above the floor or ground shall not be considered toe clearance.

306.2.5 Width. Toe clearance shall be 30 inches (760 mm) minimum in width.

306.3 Knee Clearance.

Figure 306.3

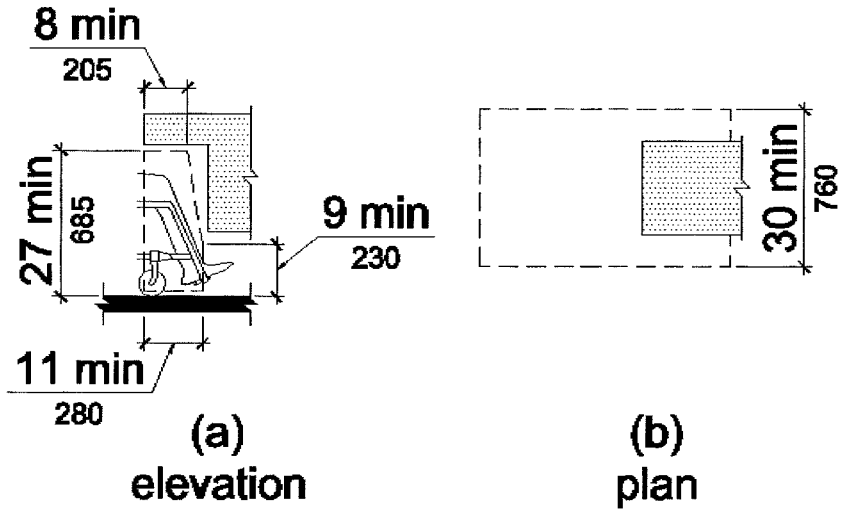

306.3.1 General. *Space* under an object between 9 inches (230 mm) and 27 inches (685 mm) above the floor or ground shall be considered knee clearance and shall comply with 306.3.

306.3.2 Maximum Depth. Knee clearance shall extend 25 inches (635 mm) maximum under an object at 9 inches (230 mm) above the floor or ground.

306.3.3 Minimum Required Depth. Where knee clearance is required under an *element* as part of a clear floor *space*, the knee clearance shall be 11 inches (280 mm) minimum in depth at 9 inches (230 mm) above the floor or ground, and 8 inches (205 mm) minimum in depth at 27 inches (685 mm) above the floor or ground.

306.3.4 Clearance Reduction. Between 9 inches (230 mm) and 27 inches (685 mm) above the floor or ground, the knee clearance shall be permitted to reduce at a rate of 1 inch (25 mm) for each 6 inches (150 mm) in height.

306.3.5 Width. Knee clearance shall be 30 inches (760 mm) minimum in width.

307 Protruding Objects

307.1 General. Protruding objects shall comply with 307.

307.2 Protrusion Limits. Objects with leading edges more than 27 inches (685 mm) and not more than 80 inches (2030 mm) above the floor or ground shall protrude 4 inches (100 mm) maximum horizontally into the *circulation path.*

Figure 307.2

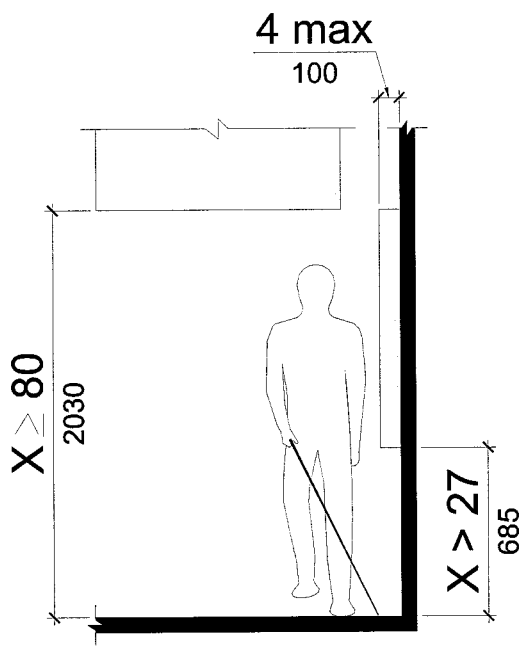

Advisory 307.2

The two principle cane techniques are the touch technique, where the cane is arced from side-to-side and touches points outside both shoulders, and the diagonal technique, where the cane is held in a stationary position diagonally across the body with the tip just above the ground at a point outside one shoulder and the handle extended to a point outside the other shoulder. When one of these techniques is used and the element is in the detectable range, it gives a person sufficient time to detect the element with the cane before there is body contact.

EXCEPTION: Handrails serving stairs and *ramps* shall protrude 4-1/2 inches (115 mm) maximum from the wall.

307.3 Post-mounted Objects. Free-standing objects mounted on posts or pylons shall overhang 12 inches (305 mm) maximum when located 27 inches (685 mm) minimum and 80 inches (2030 mm) maximum above the floor or ground. Where a *sign* or other obstruction is mounted between posts or pylons and the clear distance between the posts or pylons is greater than 12 inches (305 mm), the

lowest edge of such *sign* or obstruction shall be 27 inches (685 mm) maximum or 80 inches (2030 mm) minimum above the floor or ground.

Figure 307.3

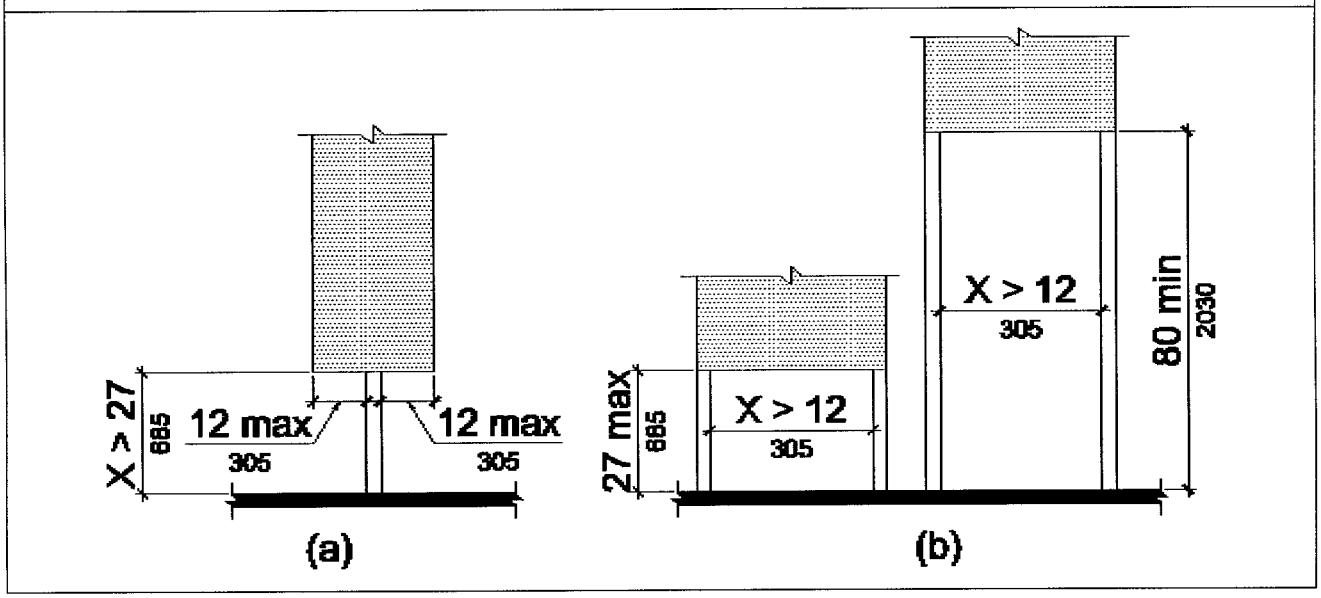

EXCEPTION: This requirement shall not apply to sloping portions of handrails serving stairs and *ramps*.

307.4 Reduced Vertical Clearance. Guardrails or other barriers shall be provided where the vertical clearance is less than 80 inches (2030 mm) high. The leading edge of such guardrail or barrier shall be located 27 inches (685 mm) maximum above the floor or ground.

Figure 307.4

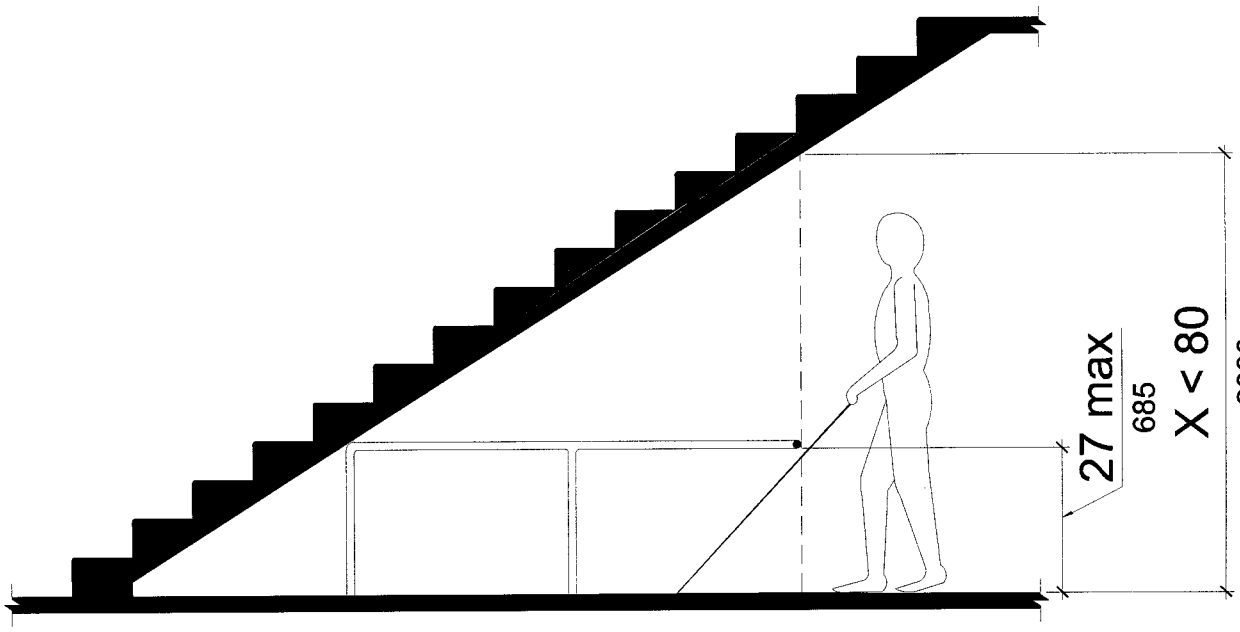

EXCEPTION: Door closers and door stops shall be permitted to be 78 inches (1980 mm) minimum above the floor or ground.

307.5 Required Clear Width. Protruding objects shall not reduce the clear width required for *accessible routes*.

308 Reach Ranges

308.1 General. Reach ranges shall comply with 308.

Advisory 308.1

The following table provides guidance on reach ranges for children according to age where *building elements* such as coat hooks, lockers, or controls and operating mechanisms are designed for use primarily by children. These dimensions apply to either forward or side reaches. *Accessible elements*, controls, and operating mechanisms designed for adult use or children over age 12 can be located outside these ranges but must be within the adult reach ranges required by 308.

Children's Reach Ranges			
Forward or Side Reach	**Ages 3 and 4**	**Ages 5 through 8**	**Ages 9 through 12**
High (maximum)	36 in (915 mm)	40 in (1015 mm)	44 in (1120 mm)
Low (minimum)	20 in (510 mm)	18 in (455 mm)	16 in (405 mm)

308.2 Forward Reach.

308.2.1 Unobstructed. Where a clear floor or ground *space* allows only a forward approach to an object and is unobstructed, the high forward reach shall be 48 inches (1220 mm) maximum and the low forward reach shall be 15 inches (380 mm) minimum above the floor or ground.

Figure 308.2.1

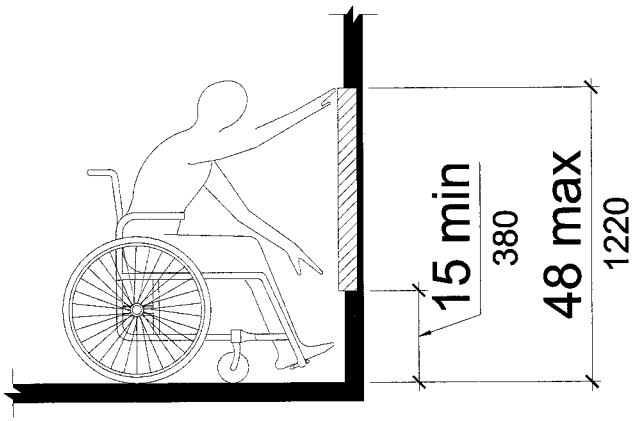

308.2.2 Obstructed High Reach. Where a clear floor or ground *space* allows only a forward approach to an object and the high forward reach is over an obstruction, the clear floor *space* shall extend beneath the object for a distance not less than the required reach depth over the obstruction. The high forward reach shall be 48 inches (1220 mm) maximum where the reach depth is 20 inches

(510 mm) maximum. Where the reach depth exceeds 20 inches (510 mm), the high forward reach shall be 44 inches (1120 mm) maximum and the reach depth shall be 25 inches (635 mm) maximum.

Figure 308.2.2

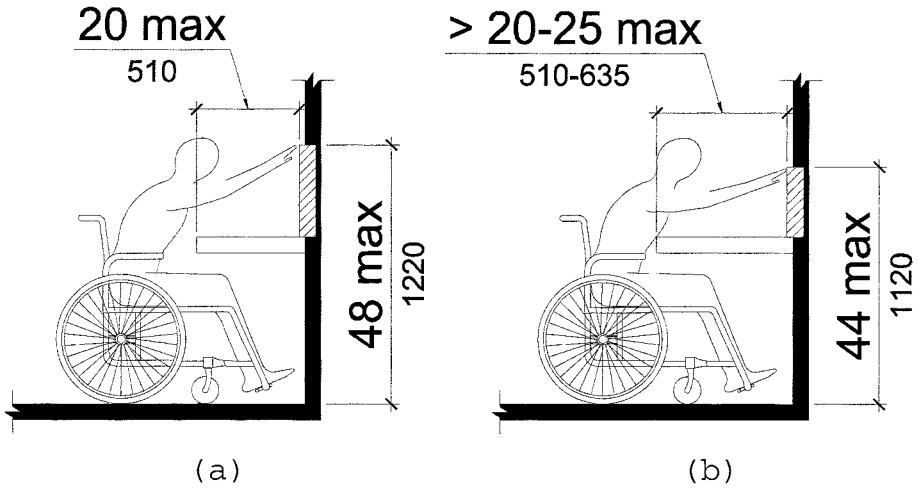

308.3 Side Reach.

308.3.1 Unobstructed. Where a clear floor or ground *space* allows a parallel approach to an element and the side reach is unobstructed, the high side reach shall be 54 inches (1370 mm) maximum and the low side reach shall be 15 inches (380 mm) minimum above the floor or ground.

Figure 308.3.1

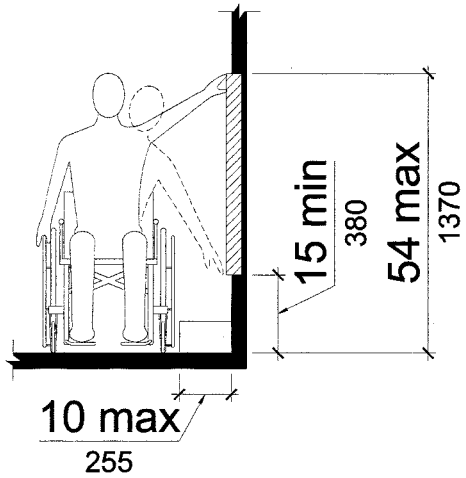

EXCEPTION: An obstruction shall be permitted between the clear floor or ground *space* and the element where the depth of the obstruction is 10 inches (255 mm) maximum.

308.3.2 Obstructed High Reach. Where a clear floor or ground *space* allows a parallel approach to an object and the high side reach is over an obstruction, the height of the obstruction shall be 34 inches (865 mm) maximum and the depth of the obstruction shall be 24 inches (610 mm) maximum. The high side reach shall be 54 inches (1370 mm) maximum for a reach depth of 10 inches (255 mm) maximum. Where the reach depth exceeds 10 inches (255 mm), the high side reach shall be 46 inches (1170 mm) maximum for a reach depth of 24 inches (610 mm) maximum.

Figure 308.3.2

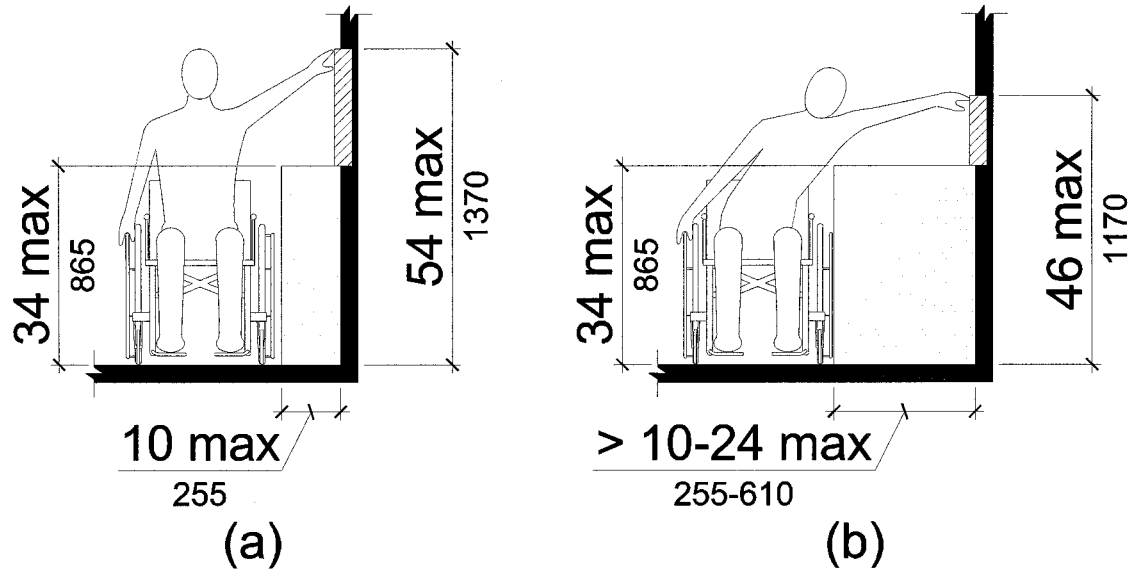

309 Operable Parts

309.1 General. *Operable parts* shall comply with 309.

309.2 Clear Floor Space. A clear floor or ground *space* complying with 305 shall be provided.

309.3 Height. *Operable parts* shall be placed within one or more of the reach ranges specified in 308.

EXCEPTION: This requirement does not apply where the use of special equipment dictates otherwise or where electrical and communications systems receptacles are not normally intended for use by building or *facility* occupants.

309.4 Operation. *Operable parts* shall be operable with one hand and shall not require tight grasping, pinching, or twisting of the wrist. The force required to activate *operable parts* shall be 5 lb (22.2 N) maximum.

CHAPTER 4: ACCESSIBLE ROUTES

401 General

401.1 Scope. *Accessible routes* and *accessible means of egress* required by Chapter 2 shall comply with the applicable provisions of this chapter.

402 Accessible Routes

402.1 General. *Accessible routes* shall comply with 402.

402.2 Components. *Accessible routes* shall consist of one or more of the following components: walking surfaces with a slope not steeper than 1:20, doorways, *ramps*, elevators and platform (*wheelchair*) lifts. All components of an *accessible route* shall comply with the applicable portions of this chapter.

403 Walking Surfaces

403.1 General. Walking surfaces that are a part of an *accessible route* shall comply with 403.

403.2 Floor or Ground Surface. Floor or ground surfaces shall comply with 302.

403.3 Slope. The *running slope* of walking surfaces shall be not steeper than 1:20. The *cross slope* of walking surfaces shall not be steeper than 1:48.

403.4 Changes in Level. Changes in level shall comply with 303.

403.5 Clear Width. The clear width of walking surfaces shall be 36 inches (915 mm) minimum.

Figure 403.5

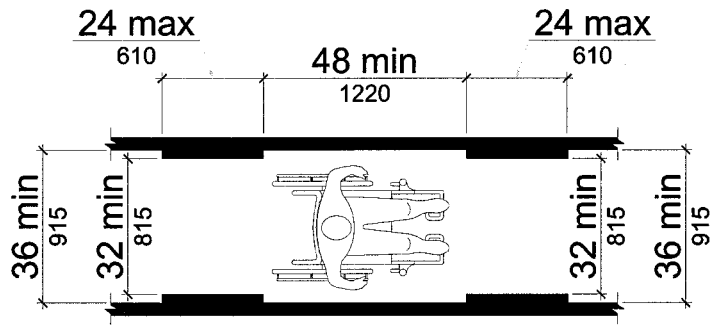

EXCEPTION: The clear width shall be permitted to be reduced to 32 inches (815 mm) minimum for a length of 24 inches (610 mm) maximum, provided that reduced width segments are separated by segments that are 48 inches (1220 mm) minimum in length and 36 inches (915 mm) minimum in width.

403.5.1 Clear Width at Turn. Where the *accessible route* makes a 180 degree turn around an object which is less than 48 inches (1220 mm) wide, clear width shall be 42 inches (1065 mm) minimum approaching the turn, 48 inches (1220 mm) minimum at the turn and 42 inches (1065 mm) leaving the turn.

Figure 403.5.1

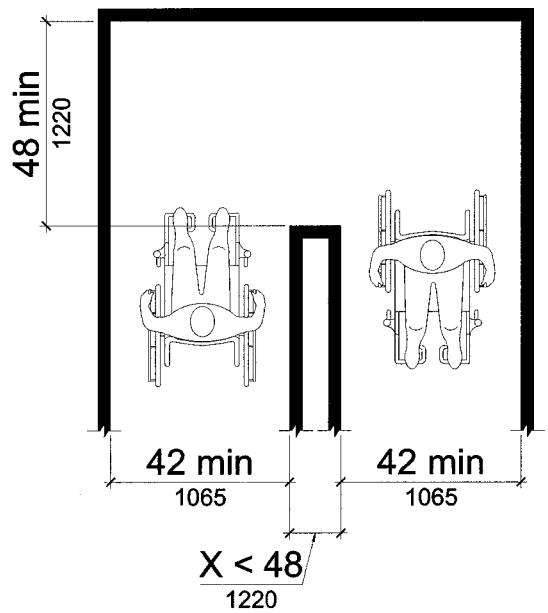

EXCEPTION: This requirement shall not apply where the clear width at the turn is 60 inches (1525 mm) minimum.

403.5.2 Passing Spaces. An *accessible route* with a clear width less than 60 inches (1525 mm) shall provide passing *spaces* at intervals of 200 feet (61 m) maximum. Passing *spaces* shall be either a 60 inch (1525 mm) minimum by 60 inch (1525 mm) minimum *space*, or an intersection of two walking surfaces which provide a T-shaped *space* complying with 304 provided that the stem and arms of the T-shaped *space* extend 48 inches (1220 mm) minimum beyond the intersection.

403.5.3 Protruding Objects. Protruding objects shall comply with 307. Protruding objects shall not reduce the required clear width.

Advisory 403.5.3
The height of the clear or unobstructed *space* is considered from the floor or ground to 80 inches (2030 mm) above the floor or ground, unless specified otherwise.

404 Doors and Doorways

404.1 General. Doors and doorways that are part of an *accessible route* shall comply with 404.

404.2 Manual Doors and Doorways. Manual doors and doorways and manual gates, including ticket gates, shall comply with 404.2.

EXCEPTION: Doors, doorways, and gates designed to be operated only by security personnel shall not be required to comply with 404.2.7, 404.2.8, and 404.2.9.

404.2.1 Revolving Doors and Turnstiles. Manual revolving doors and revolving turnstiles shall not be part of an *accessible route*.

404.2.2 Double-Leaf Doors. At least one of the active leaves of doorways with two independently operated leaves shall comply with 404.2.3 and 404.2.4.

Figure 402.2.2

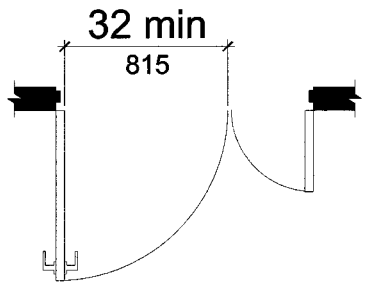

404.2.3 Clear Width. Doorways shall have a clear opening of 32 inches (815 mm) minimum. Clear openings of doorways with swinging doors shall be measured between the face of the door and the stop, with the door open 90 degrees. Openings more than 24 inches (610 mm) in depth shall provide a clear opening of 36 inches (915 mm) minimum. There shall be no projections into the required clear opening width lower than 34 inches (865 mm) above the floor or ground. Projections into the

clear opening width between 34 inches (865 mm) and 80 inches (2030 mm) above the floor or ground shall not exceed 4 inches (100 mm).

Figure 404.2.3

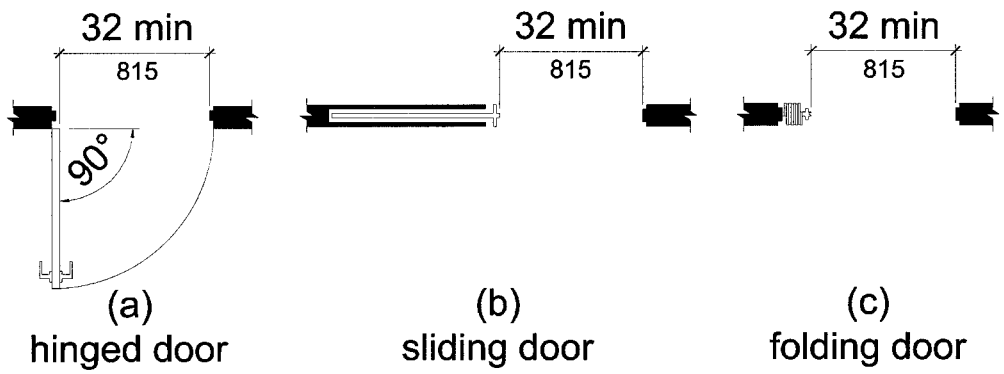

EXCEPTION: In *alterations*, a projection of 5/8 inch (16 mm) maximum into the required clear width shall be permitted for the latch side stop.

404.2.4 Maneuvering Clearances.

404.2.4.1 Swinging Doors. Approaches to swinging doors shall have maneuvering clearances complying with Table 404.2.4.1.

Table 404.2.4.1 Maneuvering Clearances at Manual Swinging Doors

Type of Use		Minimum Maneuvering Clearance[1]	
Approach Direction	**Door Side**	**Perpendicular to Doorway**	**Parallel to Doorway (beyond latch side unless noted)**
From front	Pull	60 inches (1525 mm)	18 inches (455 mm)
From front	Push	48 inches (1220 mm)	0 inches (0 mm)[2]
From hinge side	Pull	60 inches (1525 mm)	36 inches (915 mm)
From hinge side	Pull	54 inches (1370 mm)	42 inches (1065 mm)
From hinge side	Push	42 inches (1065 mm)[3]	22 inches (560 mm)[4]
From latch side	Pull	48 inches (1220 mm)[5]	24 inches (610 mm)
From latch side	Push	42 inches (1065 mm)[6]	24 inches (610 mm)

1. Maneuvering clearances shall include the full width of the doorway.
2. Add 12 inches (305 mm) if closer and latch are provided.
3. Add 6 inches (150 mm) if closer and latch are provided.
4. beyond hinge side
5. Add 6 inches (150 mm) if closer and latch are provided.
6. Add 6 inches (150 mm) if closer and latch are provided.

EXCEPTION: Doors to hospital patient sleeping rooms shall not be required to provide the clearance beyond the latch side of the door provided the door is 44 inches (1120 mm) wide minimum.

Figure 404.2.4.1

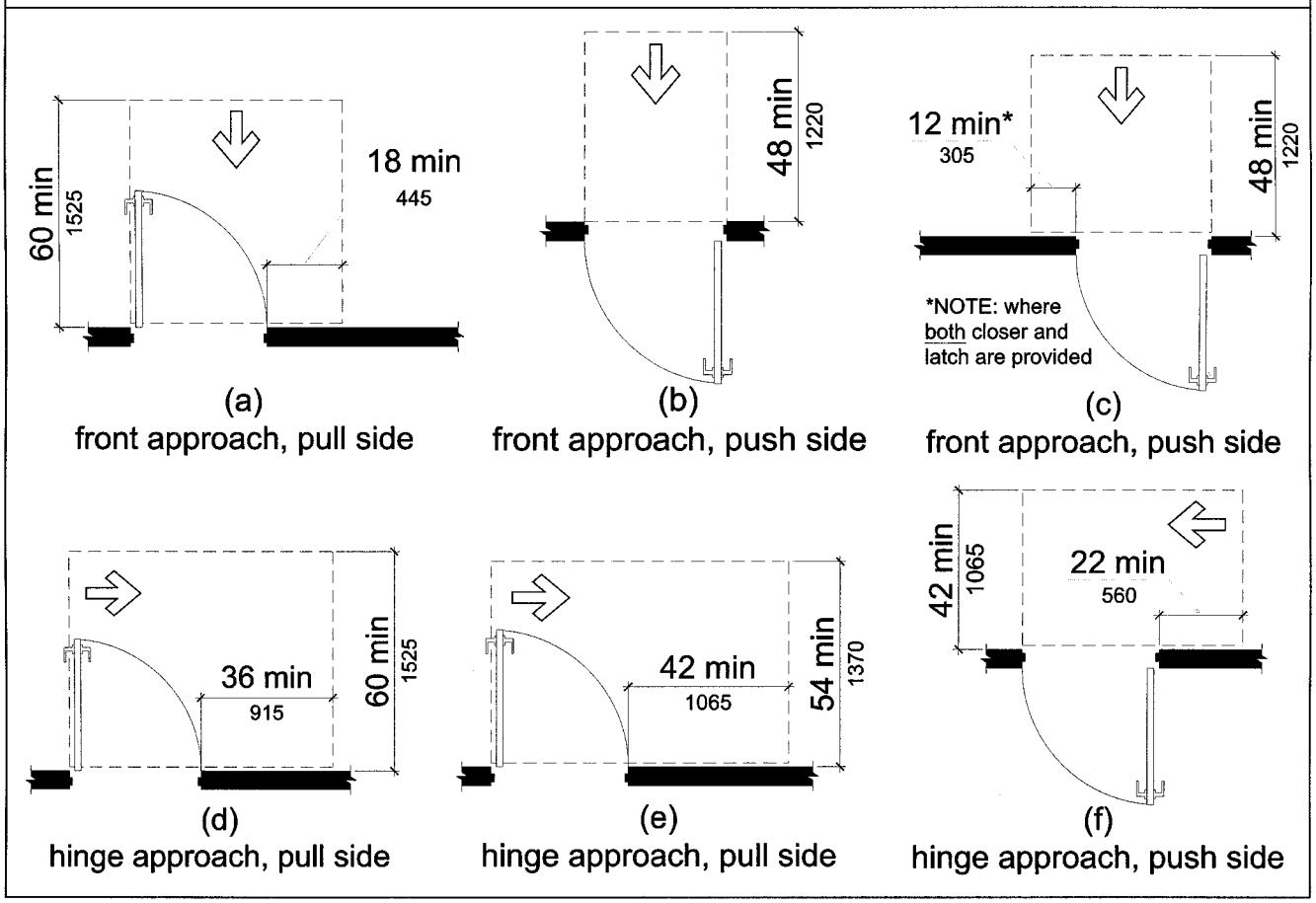

Figure 404.2.4.1

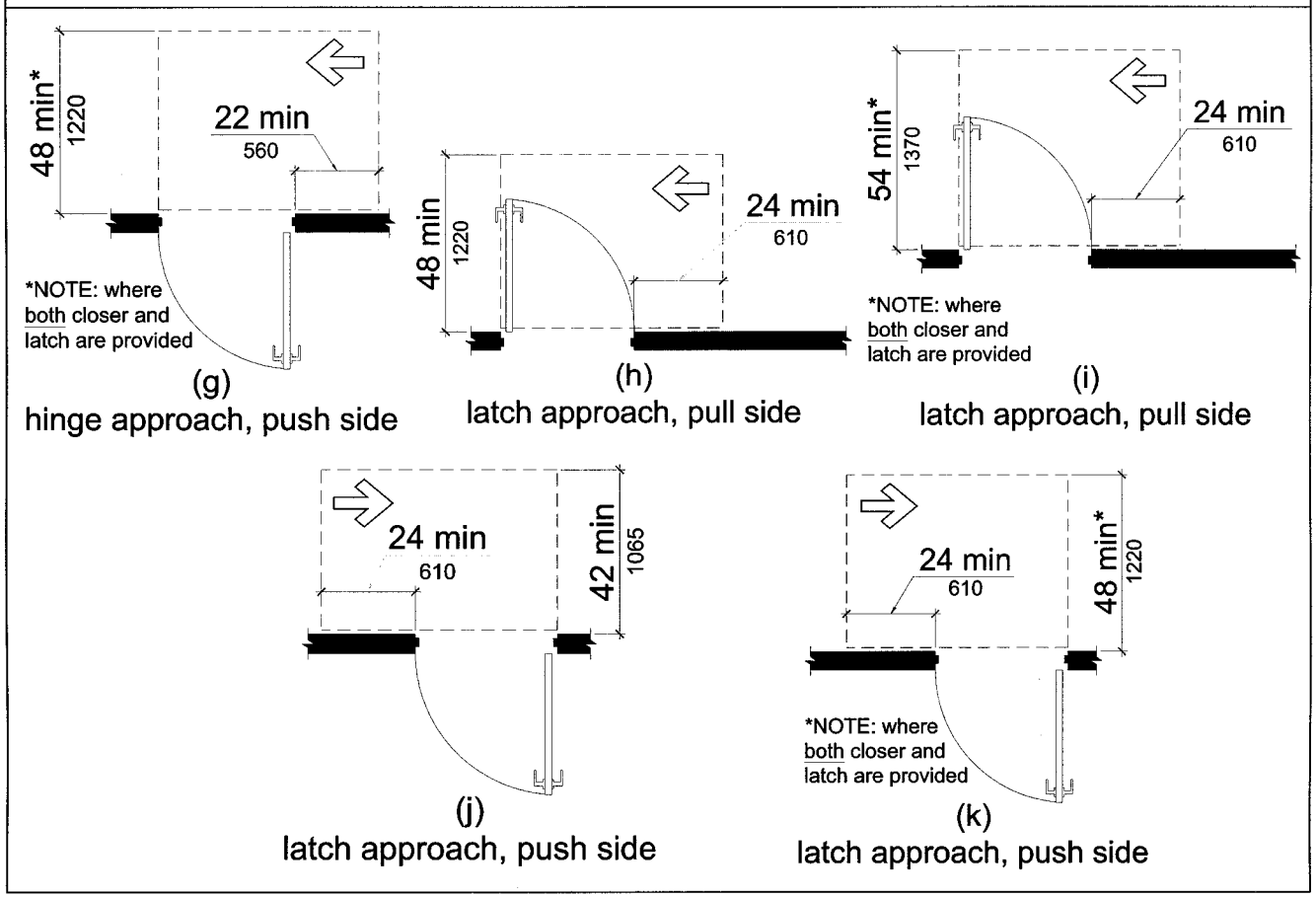

404.2.4.2 Doorways without Doors, Sliding Doors, and Folding Doors. Doorways less than 36 inches (915 mm) wide without doors, sliding doors, or folding doors shall have maneuvering clearances complying with Table 404.2.4.2.

Table 404.2.4.2 Maneuvering Clearances at Doorways without Doors, Manual Sliding Doors, and Manual Folding Doors

	Minimum Maneuvering Clearance[1]	
Approach Direction	**Perpendicular to Doorway**	**Parallel to Doorway (beyond stop/latch side unless noted)**
From Front	48 inches (1220 mm)	0 inches (0 mm)
From side[2]	42 inches (1065 mm)	0 inches (0 mm)

Table 404.2.4.2 Maneuvering Clearances at Doorways without Doors, Manual Sliding Doors, and Manual Folding Doors

	Minimum Maneuvering Clearance[1]	
Approach Direction	**Perpendicular to Doorway**	**Parallel to Doorway (beyond stop/latch side unless noted)**
From pocket/hinge side	42 inches (1065 mm)	22 inches (560 mm)[3]
From stop/latch side	42 inches (1065 mm)	24 inches (610 mm)

1. Maneuvering clearance shall include the full width of the doorway.
2. doorway with no door only
3. beyond pocket/hinge side

EXCEPTION: Doors to hospital patient sleeping rooms are exempt from the clearance beyond the stop/latch side of the door provided the door is 44 inches (1120 mm) wide minimum.

Figure 404.2.4.2

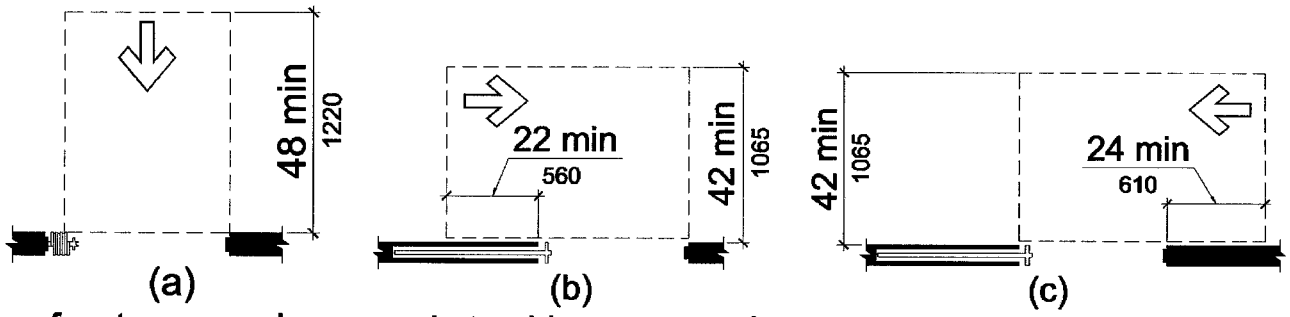

(a) front approach (b) pocket or hinge approach (c) stop or latch approach

404.2.4.3 Recessed Doors. Recessed doors where the plane of the doorway is offset more than 8 inches (205 mm) from any obstruction within 18 inches (455 mm) measured laterally on the latch side of the door shall provide maneuvering clearances for front approach.

Figure 404.2.4.3

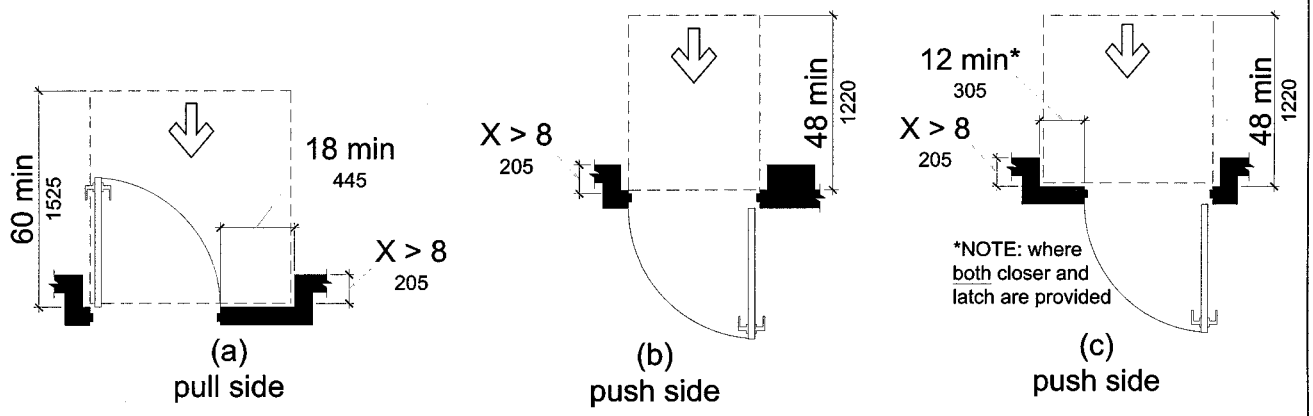

Advisory 404.2.4.3

A door can be recessed due to wall thickness, or the placement of casework, and other fixed *elements*. This provision should be applied wherever doors are recessed.

404.2.4.4 Floor or Ground Surface. Floor or ground surface within required maneuvering clearances shall have a slope of 1:48 maximum and shall comply with 302. Changes in level, except at thresholds complying with 404.2.5, are not permitted.

404.2.5 Thresholds. Thresholds if provided at doorways shall be 1/2 inch (13 mm) maximum in height. Raised thresholds and changes in level at doorways shall comply with 302 and 303.

EXCEPTION: This requirement shall not apply to existing or *altered* thresholds 3/4 inch (19 mm) high maximum that have a beveled edge on each side.

404.2.6 Two Doors in Series. The distance between two hinged or pivoted doors in series shall be 48 inches (1220 mm) minimum plus the width of any door swinging into the *space*. Doors in series shall swing either in the same direction or away from the *space* between the doors.

Figure 404.2.6

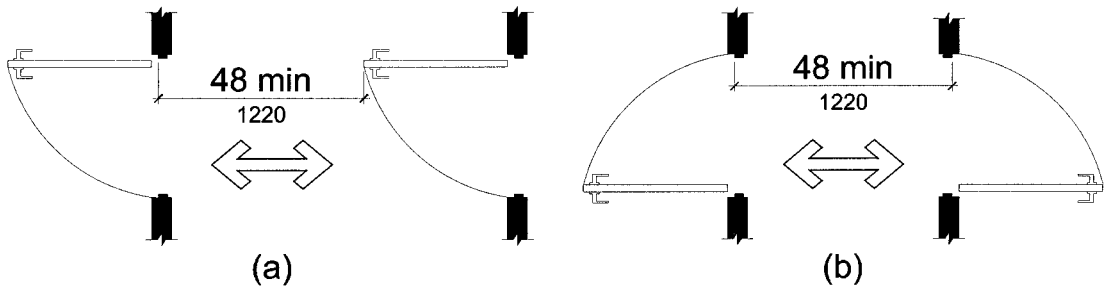

404.2.7 Door Hardware. Handles, pulls, latches, locks, and other *operable parts* on *accessible* doors shall comply with 309.4. Such hardware shall be 34 inches (865 mm) minimum and 48 inches (1220 mm) maximum above the floor or ground. When sliding doors are in the fully open position, operating hardware shall be exposed and usable from both sides.

Figure 404.2.7

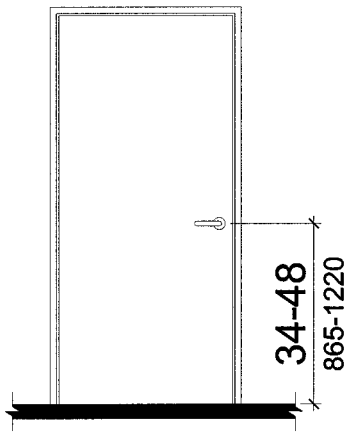

Advisory 404.2.7

Door hardware that can be operated with a closed fist or a loose grip accommodates the greatest range of users. Hardware that requires simultaneous hand and finger movements require greater dexterity and coordination and is not recommended.

EXCEPTION: Existing locks shall be permitted in any location at existing glazed doors without stiles, existing overhead rolling doors or grilles, and similar existing doors or grilles that are designed with locks that are activated only at the top or bottom rail.

404.2.8 Closing Speed.

404.2.8.1 Door Closers. Door closers shall be adjusted so that from an open position of 90 degrees, the time required to move the door to a position of 12 degrees from the latch is 5 seconds minimum.

404.2.8.2 Spring Hinges. Door spring hinges shall be adjusted so that from the open position of 70 degrees, the door shall move to the closed position in 1.5 seconds minimum.

404.2.9 Door Opening Force. Fire doors shall have a minimum opening force allowable by the appropriate *administrative authority.* The required force for pushing or pulling open a door other than fire doors shall be as follows:

1. Interior hinged doors: 5 lb (22.2 N) maximum.
2. Sliding or folding doors: 5 lb (22.2 N) maximum.

These forces do not apply to the force required to retract latch bolts or disengage other devices that hold the door in a closed position.

Advisory 404.2.9
The maximum force pertains to the continuous application of force necessary to fully open a door, not the initial force needed to overcome the inertia of the door. It does not apply to the force required to retract bolts or to disengage other devices used to keep the door in a closed position.

404.2.10 Door Surface. The bottom 10 inches (255 mm) of all swinging doors shall have a smooth surface on the push side and extending the full width of the door. Parts creating horizontal or vertical

joints in such surface shall be within 1/16 inch (1.6 mm) of the same plane as the other. Cavities created by added kick plates shall be capped.

Figure 404.2.10

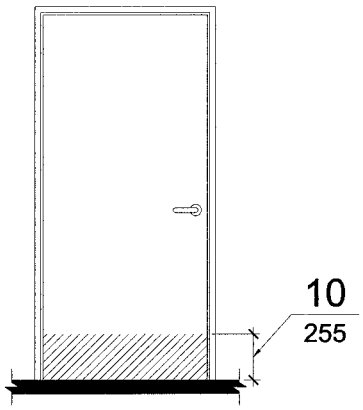

EXCEPTIONS: 1. This requirement shall not apply to sliding doors.
2. This requirement shall not apply to tempered glass doors without stiles and having a bottom rail or shoe with the top leading edge tapered at 60 degrees minimum from the horizontal.
3. This requirement shall not apply to doors that do not extend to within 10 inches (255 mm) of the floor or ground.

404.2.11 Vision Lites. Doors, and sidelites adjacent to doors, containing one or more glazing panels that permit viewing through the panels shall have the bottom of at least one glazed panel located 43 inches (1090 mm) maximum above the floor.

Figure 404.2.11

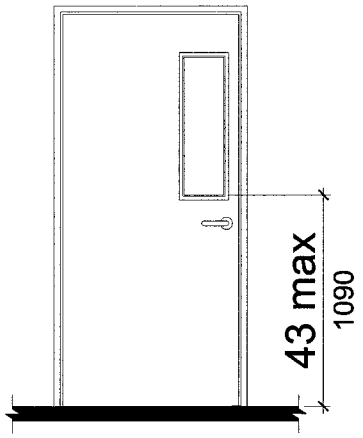

EXCEPTION: Vision lites with the lowest part more than 66 inches (1675 mm) from the floor or ground are not required to comply with this section.

404.3 Automatic Doors. *Automatic doors* and automatic gates shall comply with 404.3. Full-powered *automatic doors* shall comply with ANSI/BHMA A156.10. Low-energy and *power-assisted doors* shall comply with ANSI/BHMA A156.19. *Automatic doors* shall be permitted on an *accessible route*.

EXCEPTION: The requirements of 404.3.2 and 404.3.4 through 404.3.7 shall not apply to doors, doorways, and gates designed to be operated only by security personnel.

404.3.1 Clear Width. Doorways shall have a clear opening of 32 inches (815 mm) minimum in power-on and power- off mode. The minimum clear width for *automatic door* systems shall be based on the clear opening provided by all leafs in the open position.

404.3.2 Maneuvering Clearance. Clearances at *power-assisted doors* shall comply with 404.2.4.

404.3.3 Thresholds. Thresholds and changes in level at doorways shall comply with 404.2.5.

404.3.4 Two Doors in Series. Doors in series shall comply with 404.2.6.

404.3.5 Operable Parts. Manually operated control switches shall comply with 309 and shall be located outside the door swing.

404.3.6 Signs. Labels and warnings for *automatic doors* shall comply with 703.4.

404.3.7 Break Out Opening. When an *automatic door* is operated in emergency mode, the clear break out opening for a swinging or sliding *automatic door* shall be 32 inches (815 mm) minimum.

405 Ramps

405.1 General. *Ramps* along *accessible route*s shall comply with 405.

405.2 Slope. *Ramp* runs shall have a *running slope* not steeper than 1:12.

Table 405.2 Maximum Ramp Slope and Rise for Existing Sites, Buildings and Facilities

Slope[1]	Maximum Rise
Steeper than 1:10 but not steeper than 1:8	3 inches (75 mm)
Steeper than 1:12 but not steeper than 1:10	6 inches (150 mm)

1. A slope steeper than 1:8 is prohibited.

EXCEPTIONS: 1. *Ramps* in or on existing *buildings* or *facilities* shall be permitted to have slopes steeper than 1:12 complying with Table 405.2 where such slopes are necessitated by *space* limitations.

2. In *alterations* to *qualified historic buildings and facilities* where exceptions for *alterations* are permitted by Chapter 2, the slope of a *ramp* run of 24 inches (610 mm) maximum shall not be steeper than 1:6.

405.3 Cross Slope. *Cross slope* of *ramp* runs shall not be steeper than 1:48.

Advisory 405.3
Cross slope is the slope of the surface perpendicular to the direction of travel. It is measured the same way as slope is measured: the rise over the run.

405.4 Floor or Ground Surfaces. Floor or ground surfaces of *ramp* runs shall comply with 302. Changes in level other than the *running slope* and *cross slope* are not permitted on *ramp* runs.

405.5 Clear Width. The clear width of a *ramp* run and the clear width between handrails, if provided, shall be 36 inches (915 mm) minimum.

405.6 Rise. The rise for any *ramp* run shall be 30 inches (760 mm) maximum.

405.7 Landings. *Ramps* shall have landings at bottom and top of each *ramp* run. Landings shall comply with 405.7.

Figure 405.7

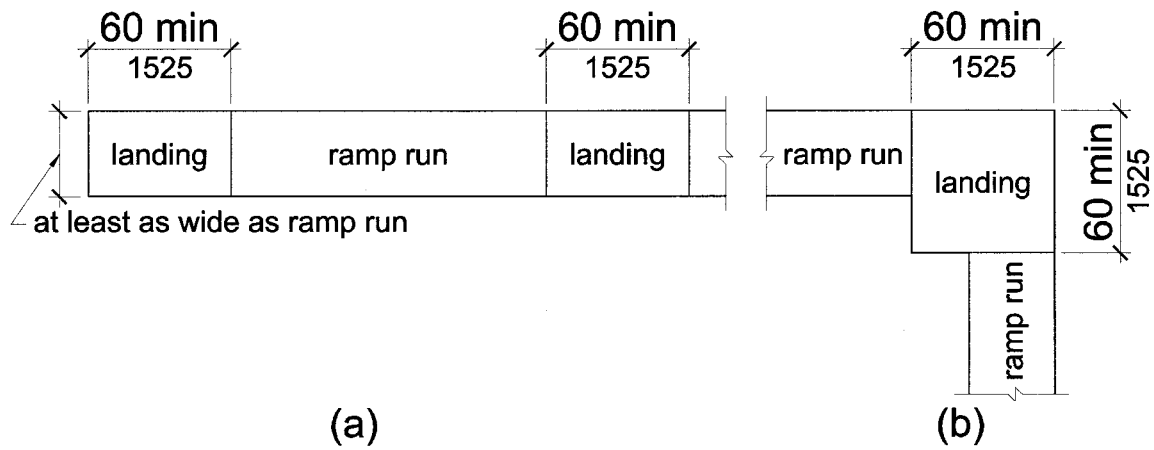

Advisory 405.7
Ramps that do not have level landings at changes in direction can create a compound slope that will not meet the requirements of this document. A level landing at doors and doorways is needed for maneuvering at the door while simultaneously operating hardware.

405.7.1 Slope. Landings shall comply with 302. Changes in level are not permitted.

EXCEPTION: Slopes not steeper than 1:48 shall be permitted.

405.7.2 Width. The landing shall be at least as wide as the widest *ramp* run leading to the landing.

405.7.3 Length. The landing length shall be 60 inches (1525 mm) minimum.

405.7.4 Change in Direction. *Ramps* that change direction between runs at landings shall have a 60 inch (1525 mm) minimum by 60 inch (1525 mm) minimum landing.

405.7.5 Doorways. Where doorways are located adjacent to a *ramp* landing, maneuvering clearances required by 404.2.4 and 404.3.2 shall be permitted to overlap the required landing area.

405.8 Handrails. *Ramp* runs with a rise greater than 6 inches (150 mm) shall have handrails complying with 505.

405.9 Edge Protection. Edge protection complying with 405.9.1 or 405.9.2 shall be provided on each side of *ramp* runs and at each side of *ramp* landings.

Figure 405.9

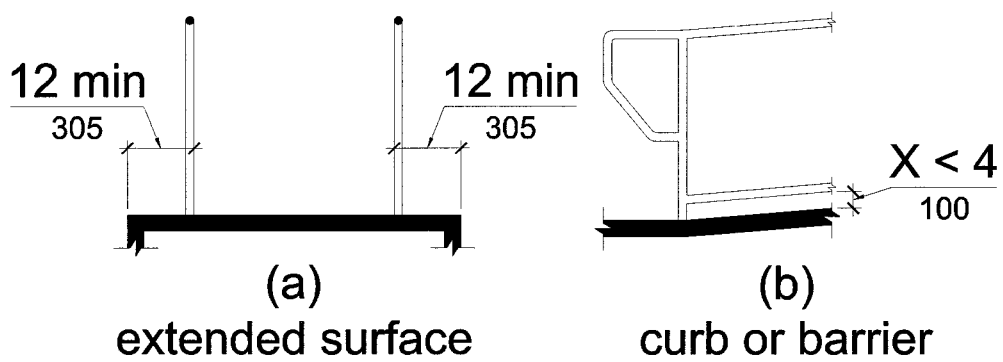

EXCEPTIONS: **1.** Edge protection is not required on *ramps* that are not required to have handrails and have sides complying with 406.3.
2. Edge protection is not required on the sides of *ramp* landings serving an adjoining *ramp* run or stairway.
3. Edge protection is not required on the sides of *ramp* landings having a vertical drop-off of 1/2 inch (13 mm) maximum within 10 inches (255 mm) horizontally of the minimum landing area.

405.9.1 Extended Floor or Ground Surface. The floor or ground surface of the *ramp* run or landing shall extend 12 inches (305 mm) minimum beyond the inside face of a handrail complying with 505.

Advisory 405.9.1
The extended surface is provided to prevent *wheelchair* casters and crutch tips from slipping off the *ramp* surface.

405.9.2 Curb or Barrier. A curb or barrier shall be provided that prevents the passage of a 4 inch (100 mm) diameter sphere, where any portion of the sphere is within 4 inches (100 mm) of the floor or ground surface.

405.10 Wet Conditions. Landings subject to wet conditions shall be designed to prevent the accumulation of water.

406 Curb Ramps

406.1 General. *Curb ramps* on *accessible routes* shall comply with 406 and with 405.2, 405.4, 405.5, and 405.10.

406.2 Counter Slope. Counter slopes of adjoining gutters and road surfaces immediately adjacent to the *curb ramp* shall not be steeper than 1:20. The adjacent surfaces at transitions at *curb ramps* to *walks*, gutters, and streets shall be at the same level.

Figure 406.2

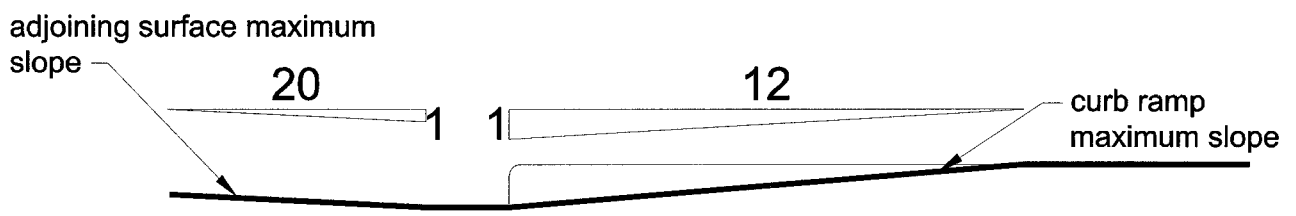

406.3 Sides of Curb Ramps. *Curb ramps* located where pedestrians must walk across the *ramp* shall have flared sides. Slope of the flares shall not be steeper than 1:10. Where the width of the walking surface at the top of the *ramp* and parallel to the run of the *ramp* is less than 48 inches (1220 mm) wide,

the flared sides shall have a slope not steeper than 1:12. *Curb ramps* with returned curbs shall be permitted where pedestrians would not normally walk across the *ramp*.

Figure 406.3

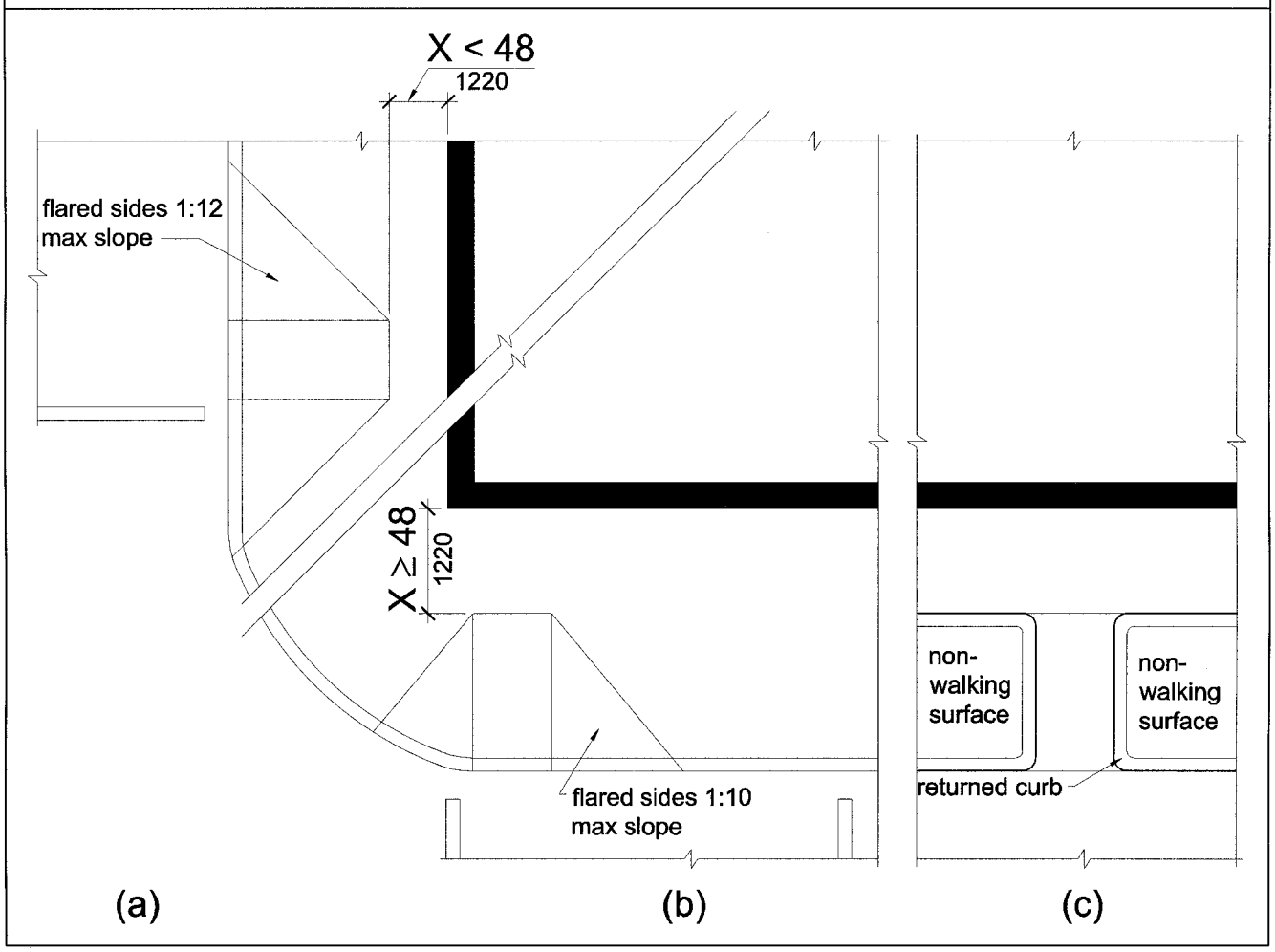

406.4 Handrails. Handrails are not required on *curb ramps*.

406.5 Location at Marked Crossings. *Curb ramps* at *marked crossings* shall be wholly contained within the markings, excluding any flared sides.

406.6 Diagonal Curb Ramps. Diagonal or corner type *curb ramps* with returned curbs or other well-defined edges shall have the edges parallel to the direction of pedestrian flow. The bottom of diagonal *curb ramps* shall have 48 inches (1220 mm) minimum of clear *space*. Diagonal *curb ramps* provided at *marked crossings* shall provide the 48 inches (1220 mm) minimum clear *space* within the

markings. Diagonal *curb ramps* with flared sides shall have a segment of straight curb 24 inches (610 mm) long minimum located on each side of the *curb ramp* and within the *marked crossing*.

Figure 406.6

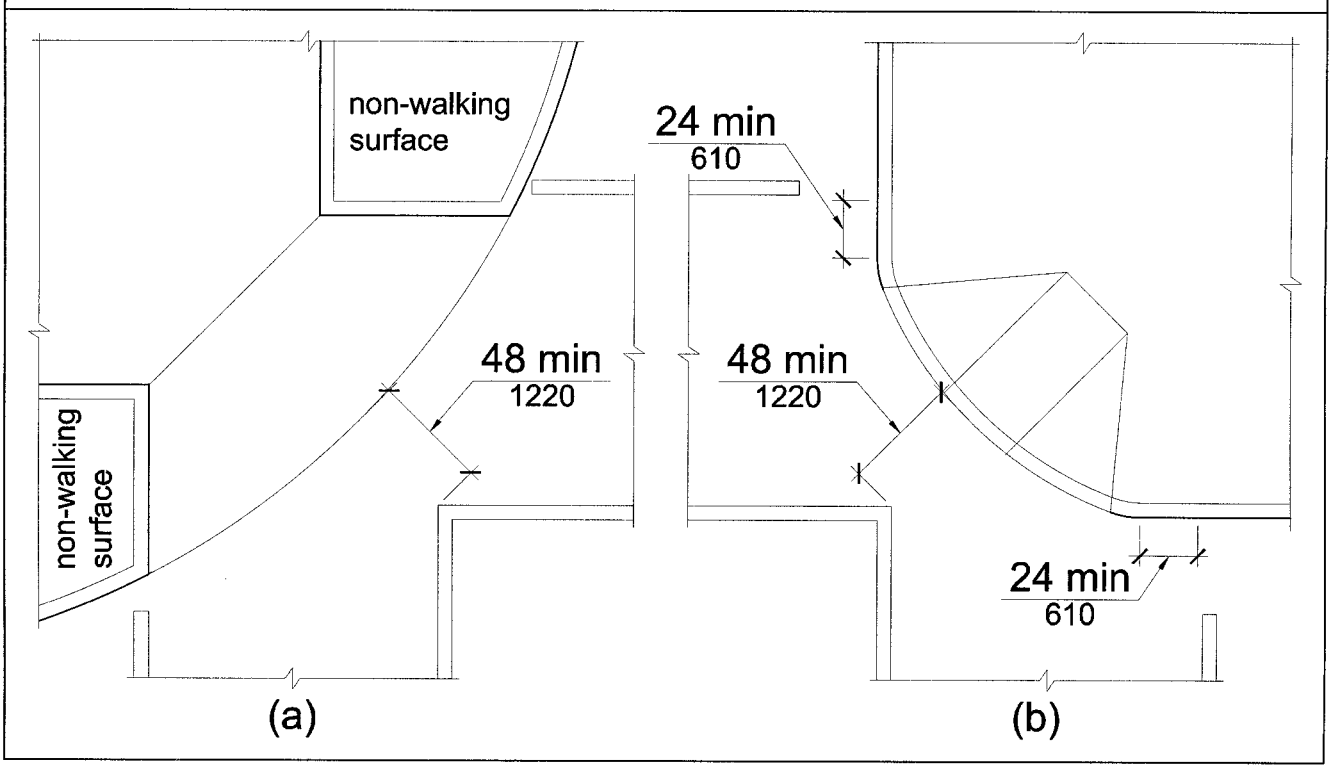

406.7 Islands. Raised islands in crossings shall be cut through level with the street or have *curb ramps* at both sides. Each *curb ramp* shall have a level area 48 inches (1220 mm) long minimum by 36 inches (915 mm) wide minimum at the top of the *curb ramp* in the part of the island intersected by the crossings. Each 48 inch (1220 mm) by 36 inch (915 mm) area shall be oriented so that the 48 inch (1220 mm)

length is in the direction of the *running slope* of the *curb ramp* it serves. The 48 inch (1220 mm) by 36 inch (915 mm) areas and the *accessible route* shall be permitted to overlap.

Figure 406.7

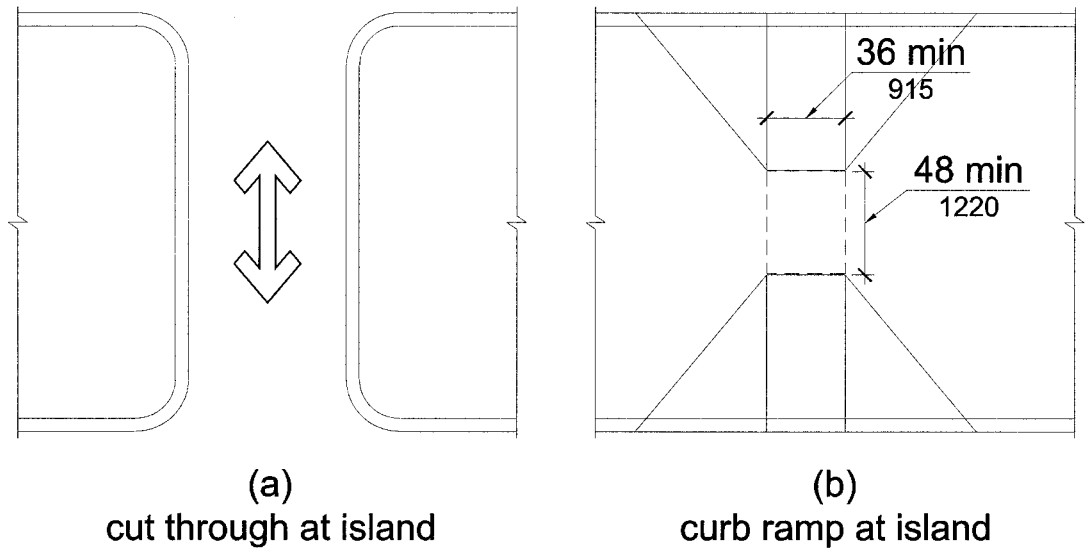

406.8 Location. *Curb ramps* shall be located so that they do not project into vehicular traffic lanes, parking *spaces*, or parking access aisles.

407 Elevators

407.1 General. New elevators required to be *accessible* shall comply with 407.2. New *destination-oriented elevators* required to be *accessible* shall comply with 407.3. New limited use/limited application elevators required to be *accessible* shall comply with 407.4. *Altered elements* of existing elevators shall comply with 407.5.

407.2 New Elevators. New *accessible* elevators shall comply with 407.2 and with ASME/ANSI A17.1. They shall be passenger elevators as classified by ASME/ANSI A17.1.

407.2.1 Automatic Operation. Elevator operation shall be automatic. Each car shall be equipped with a self-leveling feature that will automatically bring and maintain the car at floor landings within a tolerance of 1/2 inch (13 mm) under rated loading to zero loading conditions.

407.2.2 Call Buttons. Call buttons in elevator lobbies and halls shall be located vertically between 35 inches (890 mm) and 48 inches (1220 mm) above the floor, measured to the centerline of the button. A clear floor *space* complying with 305 shall be provided. Such call buttons shall have visible signals to indicate when each call is registered and when each call is answered. Call buttons shall be 3/4 inch (19 mm) minimum in the smallest dimension. The button that designates the up

direction shall be located above the button that designates the down direction. Buttons shall be raised or flush. Objects located beneath hall call buttons shall protrude 4 inches (100 mm) maximum into the clear floor *space*.

Figure 407.2.2

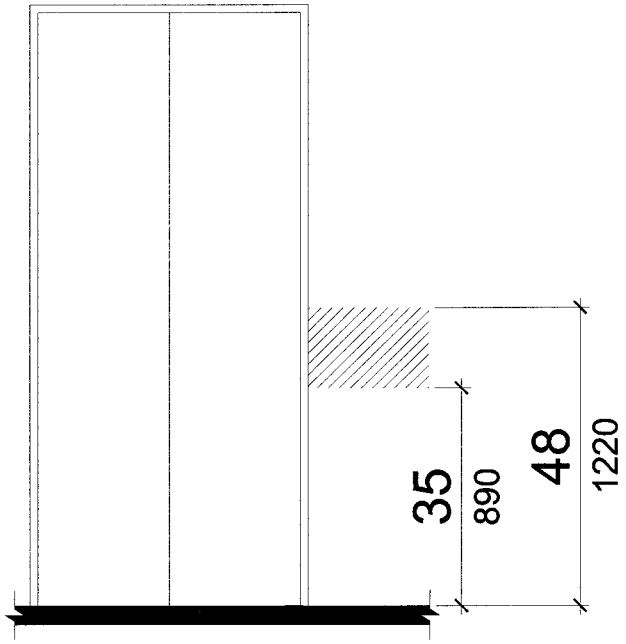

407.2.3 Hall Signals. A visible and audible signal shall be provided at each hoistway *entrance* to indicate which car is answering a call and the direction of travel. Alternatively, in-car signals shall be located in cars, visible from the floor area adjacent to the hall call buttons, and shall comply with the requirements of this section.

407.2.3.1 Audible Signals. Audible signals shall sound once for the up direction and twice for the down direction, or shall have verbal annunciators that state the word "up" or "down." Audible signals or verbal annunciators shall have a frequency of 1500 Hz maximum. The audible signal or verbal annunciator shall be 20 dBA minimum and 80 dBA maximum, measured at the hall call button.

407.2.3.2 Visible Signals. Visible signals shall comply with 407.2.3.2.

407.2.3.2.1 Height. Hall signal fixtures shall be centered at 72 inches (1830 mm) minimum above the floor or ground.

Figure 407.2.3.2.1

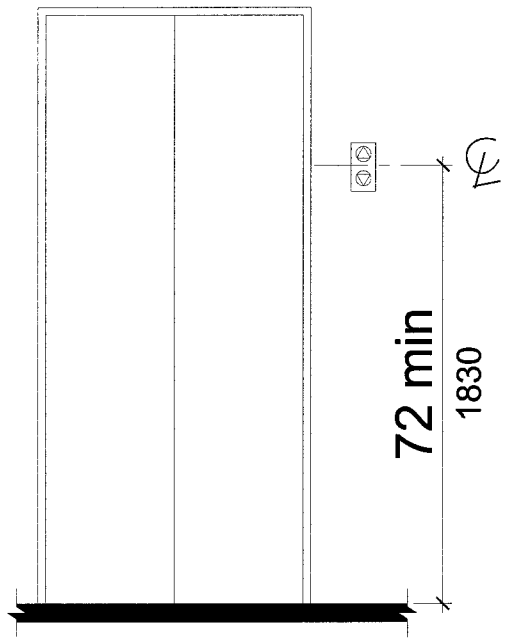

407.2.3.2.2 Size. The visible signal *elements* shall be 2-1/2 inches (64 mm) minimum measured along the vertical centerline of the *element*.

Figure 407.2.3.2.2

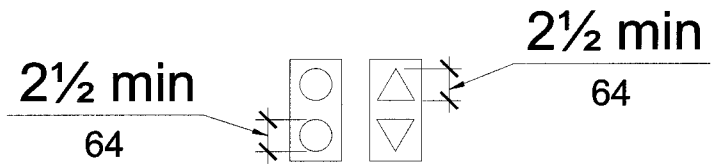

407.2.3.2.3 Visibility. Signals shall be visible from the floor area adjacent to the hall call button.

407.2.4 Tactile Signs on Hoistway Entrances. *Tactile character* and Braille floor designations shall be provided on both jambs of elevator hoistway *entrances* and shall be 60 inches (1525 mm) above the floor, measured from the baseline of the *characters*. A *tactile* star shall also be provided

on both jambs at the main entry level. Such *characters* shall be 2 inches (51 mm) high and shall comply with 703.2.

Figure 407.2.4

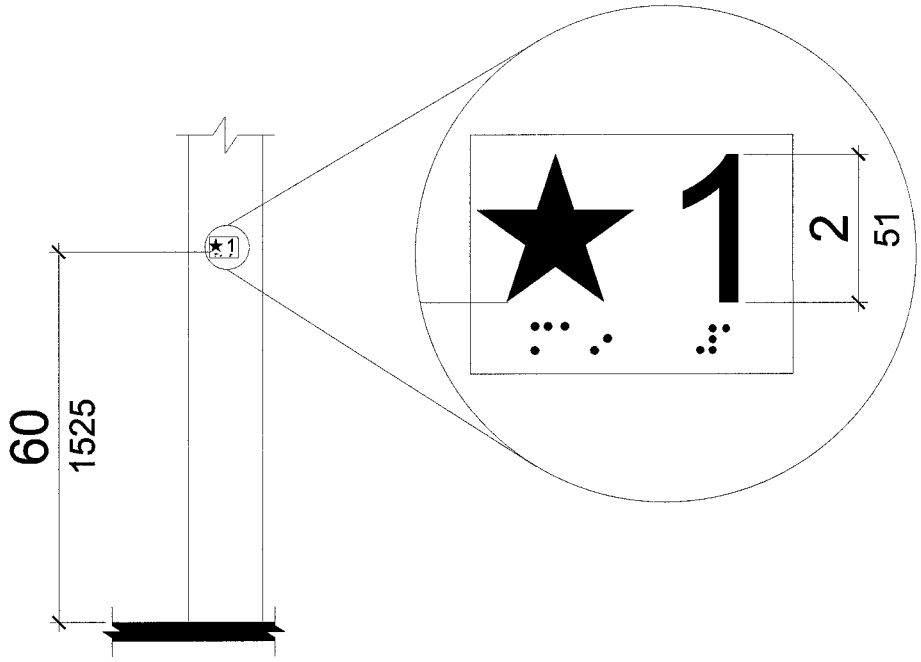

407.2.5 Door Operation. Elevator doors shall be the horizontal type. Elevator hoistway and car doors shall open and close automatically. Elevator doors shall be provided with a reopening device that shall stop and reopen a car door and hoistway door automatically if the door becomes obstructed by an object or person. The device shall be activated by sensing an obstruction passing through the opening at 5 inches (125 mm) and 29 inches (735 mm) above the floor. The device shall

not require physical contact to be activated, although contact may occur before the door reverses. Door reopening devices shall remain effective for 20 seconds minimum.

Figure 407.2.5

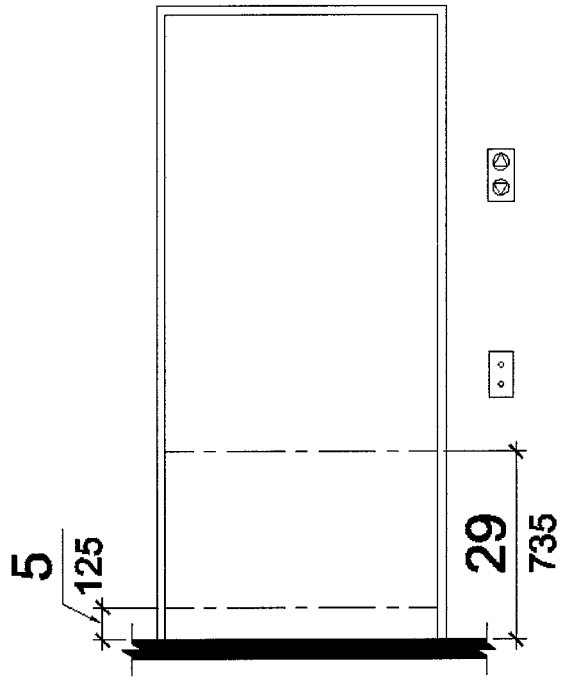

407.2.6 Door and Signal Timing for Hall Calls. The minimum acceptable time from notification that a car is answering a call or designation of which car is assigned to a lobby destination floor entry until the doors of that car start to close shall be calculated from the following equation:

T = D/(1.5 ft/s) or
T = D/(455 mm/s) = 5 seconds minimum

where T equals the total time in seconds and D equals the distance (in feet or millimeters) from the point in the lobby or corridor 60 inches (1525 mm) directly in front of the farthest call button controlling that car to the centerline of its hoistway door. For cars with in-car lanterns, T begins when the signal is visible from the point 60 inches (1525 mm) directly in front of the farthest hall call button and the audible signal is sounded.

407.2.7 Door Delay for Car Calls. Elevator doors shall remain fully open in response to a car call for 3 seconds minimum.

407.2.8 Inside Dimensions of Elevator Cars. Clear width of elevator doors and inside dimensions of elevator cars shall comply with Table 407.2.8.

Table 407.2.8 Elevator Door and Car Sizes

	Minimum Dimensions			
Door Location	**Door Clear Width**	**Inside Car, Side to Side**	**Inside Car, Back Wall to Front Return**	**Inside Car, Back Wall to Inside Face of Door**
Centered	42 inches (1065 mm)	80 inches (2030 mm)	51 inches (1295 mm)	54 inches (1370 mm)
Side (off-centered)	36 inches (915 mm)[1]	68 inches (1725 mm)	51 inches (1295 mm)	54 inches (1370 mm)
Any	36 inches (915 mm)[1]	54 inches (1370 mm)	80 inches (2030 mm)	80 inches (2030 mm)
Any	36 inches (915 mm)[1]	60 inches (1525 mm)[2]	60 inches (1525 mm)[2]	60 inches (1525 mm)[2]

1. A tolerance of minus 5/8 inch (16 mm) is permitted.
2. Other car configurations that provide a *wheelchair* turning *space* complying with 304 with the door closed are permited.

Figure 407.2.8

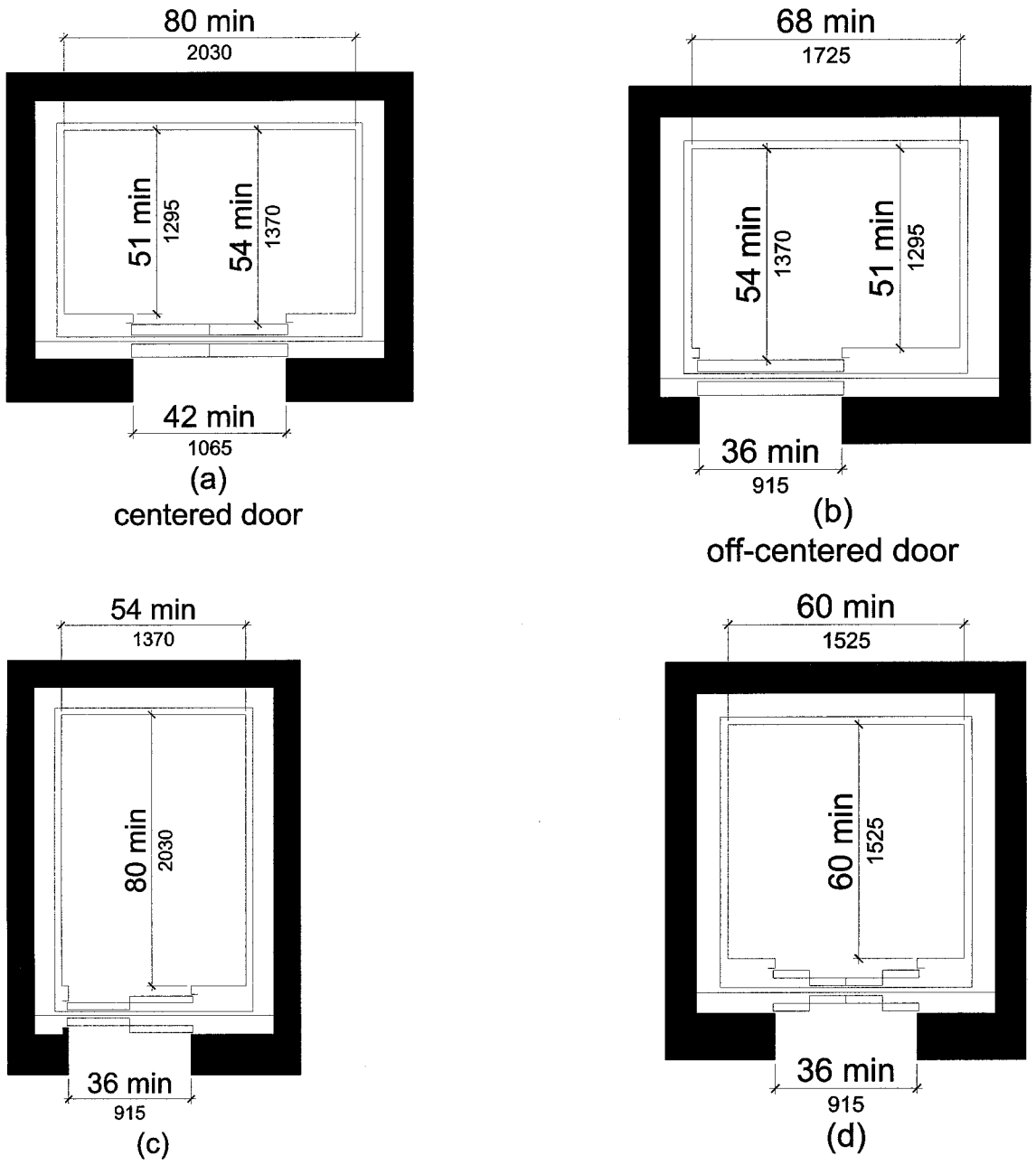

407.2.9 Floor Surfaces. Floor surfaces in elevator cars shall comply with 302. The clearance between the car platform sill and the edge of any hoistway landing shall be 1-1/4 inch (32 mm) maximum.

407.2.10 Illumination Levels. The level of illumination at the car controls, platform, car threshold and car landing sill shall be 5 footcandles (54 lux) minimum.

407.2.11 Car Controls. Elevator controls shall comply with 407.2.11.

407.2.11.1 Buttons. Buttons shall be 3/4 inch (19 mm) minimum in their smallest dimension. Buttons shall be raised or flush. Buttons shall be arranged with numbers in ascending order. When two or more columns of buttons are provided they shall read from left to right. Keypads, where provided, shall be in a standard telephone keypad arrangement.

Figure 407.2.11.1

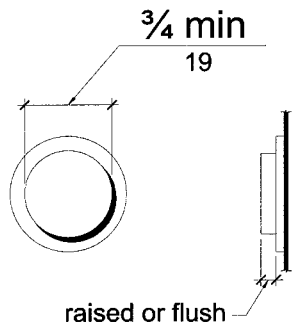

407.2.11.2 Designations and Indicators for Control Buttons. Control buttons shall be identified by *tactile characters* complying with 703.2. *Characters* and Braille shall be placed immediately to the left of the button to which the designations apply. The control button for the main entry floor and control buttons, other than remaining buttons with floor designations, shall be identified with *tactile* symbols as shown in Table 407.2.11.2. Buttons with floor designations shall be provided with visible indicators to show that a call has been registered. The visible indication shall extinguish when the car arrives at the designated floor. Where provided, telephone-style keypad buttons shall be identified by *tactile characters* complying with 703.2 except that Braille is not required. *Characters* shall be centered on the corresponding keypad button.

Table 407.2.11.2 Elevator Control Button Identification

Control Button	Tactile Symbol	Braille Message
Emergency Stop		⠌⠕⠏ "ST"OP" Three cells
Alarm		⠁⠇⠍ AL"AR"M Four cells

Table 407.2.11.2 Elevator Control Button Identification

Control Button	Tactile Symbol	Braille Message
Door Open		OP"EN" Three cells
Door Close		CLOSE Five cells
Main Entry Floor		MA"IN" Three cells
Phone		PH"ONE" Four cells

Figure 407.2.11.2

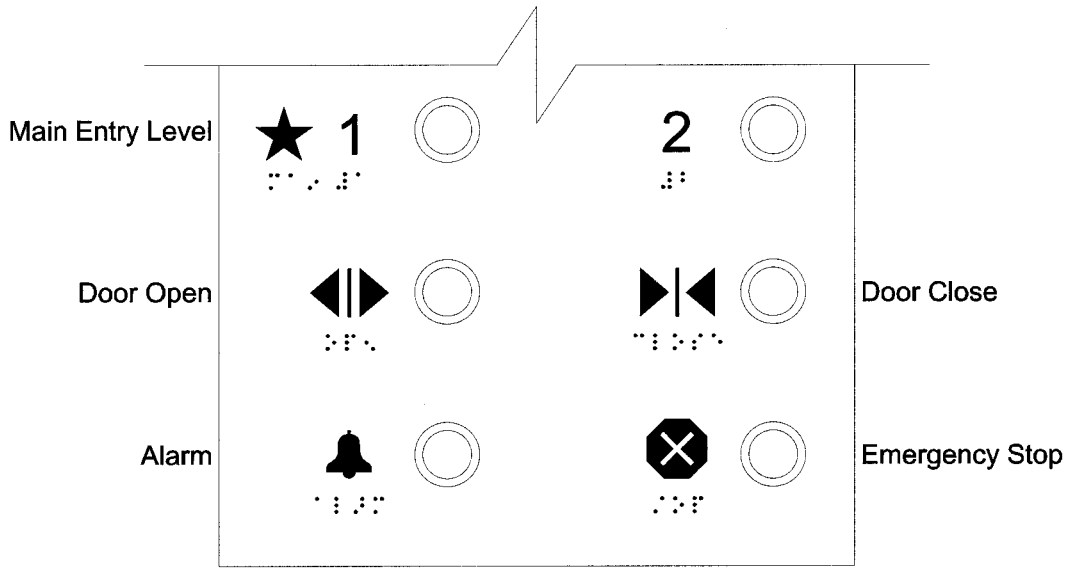

407.2.11.3 Height. Buttons with floor designations shall be located within one of the reach ranges specified in 308. Emergency controls, including the emergency alarm, shall be grouped

at the bottom of the panel. Emergency control buttons shall have their centerlines 35 inches (890 mm) minimum above the floor.

Figure 407.2.11.3

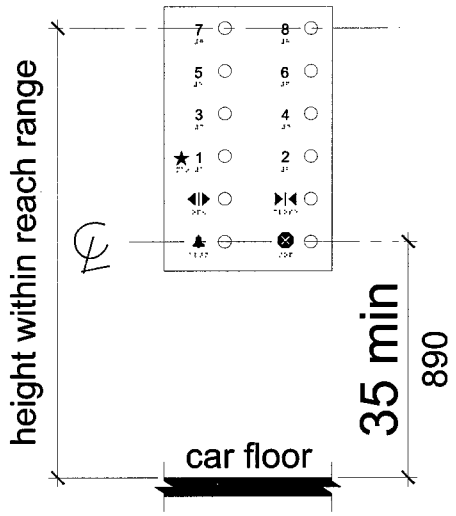

407.2.11.4 Location. Controls shall be located to accommodate a forward reach or side reach as specified in 308.

407.2.12 Car Position Indicators. In elevator cars, audible and visible car location indicators shall be provided.

407.2.12.1 Visible Indicators. Indicators shall be located above the car control panel or above the door. Numerals shall be 1/2 inch (13 mm) high minimum. As the car passes a floor and when a car stops at a floor served by the elevator, the corresponding *character* shall illuminate.

Figure 407.2.12.1

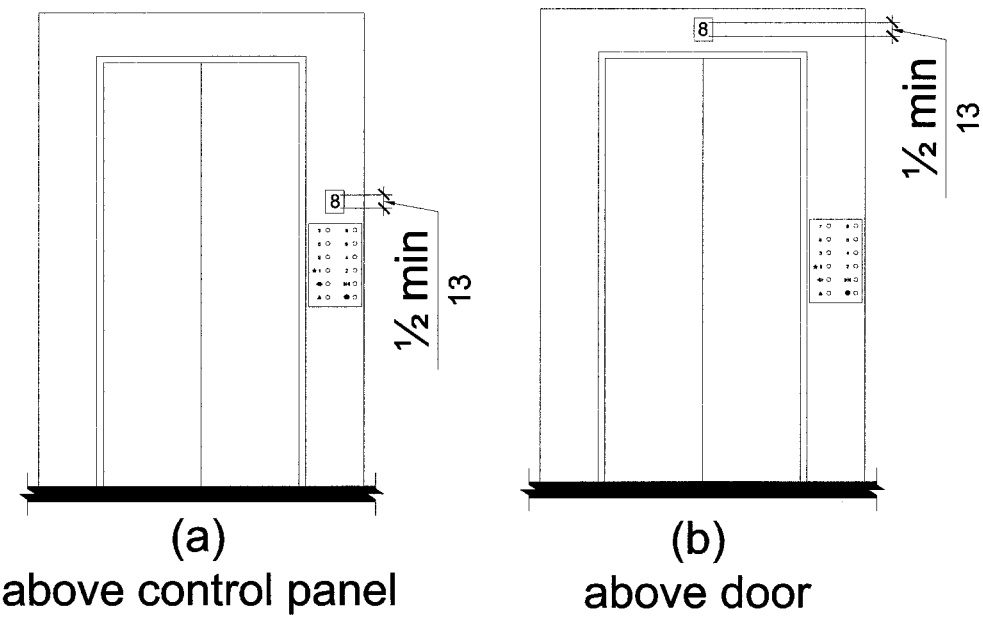

407.2.12.2 Audible Indicators. The audible signal shall be 20 dBA minimum and 80 dBA maximum, measured at the annunciator, and shall have a frequency of 1500 Hz maximum. The signal shall be an automatic verbal announcement which announces the floor at which the car has stopped.

EXCEPTION: For elevators that have a rated speed of 200 feet per minute (1 m/s) or less, an audible signal with a frequency of 1500 Hz maximum which sounds as the car passes or stops at a floor served by the elevator shall be permitted.

407.2.13 Emergency Communications. Emergency two-way communication systems between the elevator car and a point outside the hoistway shall comply with ASME/ANSI A17.1. The highest *operable part* of a two-way communication system shall be 48 inches (1220 mm) maximum above the floor. The device shall be identified by *tactile characters* complying with 703.2 located adjacent to the device. If the system uses a handset, the cord from the panel to the handset shall be 29 inches (735 mm) long minimum. The car emergency signaling device shall not be limited to voice

communication. If instructions for use are provided, essential information shall be presented in both *tactile* and visual form.

Figure 407.2.13

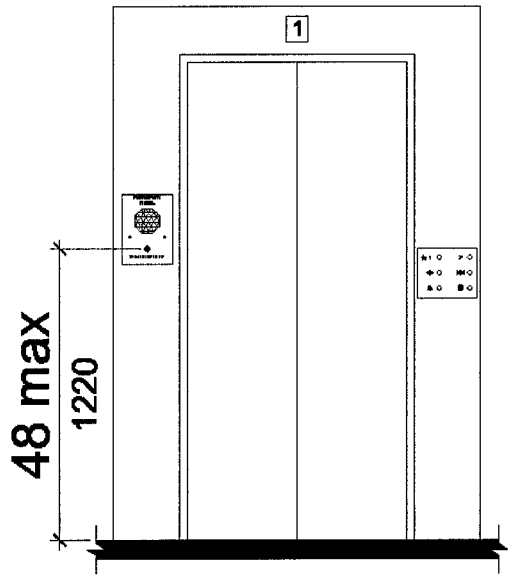

407.3 New Destination-Oriented Elevators. New *accessible destination-oriented elevators* shall comply with 407.2.1, 407.2.4 through 407.2.10, and 407.2.13. Such elevators shall also comply with 407.3 and ASME/ANSI A17.1. They shall be passenger elevators as classified by ASME/ANSI A17.1.

407.3.1 Call Buttons. Call buttons shall be located vertically between 35 inches (890 mm) and 48 inches (1220 mm) above the floor, measured to the centerline of the button. A clear floor *space* complying with 305 shall be provided. Call buttons shall be 3/4 inch (19 mm) minimum in the smallest dimension. Buttons shall be raised or flush. Objects located beneath hall call buttons shall protrude 4 inches (100 mm) maximum into the clear floor *space*. A keypad or other means for the entry of destination information shall be provided. Keypads, where provided, shall be in a standard telephone keypad arrangement. Visible and audible signals which indicate which elevator car to enter shall be provided.

407.3.2 Hall Signals. A visible and audible signal shall be provided to indicate a car destination corresponding with 407.3.1. The audible tone and verbal announcement shall be the same as those given at the call button or call button keypad. Each elevator in a bank shall have audible and visible means for differentiation.

407.3.2.1 Visible Signals. Visible signals shall comply with 407.3.2.1.

407.3.2.1.1 Height. Hall signal fixtures shall be centered at 72 inches (1830 mm) minimum above the floor or ground.

407.3.2.1.2 Size. The visible signal *elements* shall be 2-1/2 inches (64 mm) minimum measured along the vertical centerline of the *element*.

407.3.2.1.3 Visibility. Signals shall be visible from the floor area adjacent to the hoistway *entrance*.

407.3.3 Car Controls. Emergency controls, including the emergency alarm, shall have their centerlines 35 inches (890 mm) minimum and 48 inches (1220 mm) maximum above the floor. Buttons shall be 3/4 inch (19 mm) minimum in their smallest dimension. Buttons shall be raised or flush. Controls shall be located to accommodate a forward reach or side reach as specified in 308.

407.3.4 Car Position Indicators. In elevator cars, audible and visible car location indicators shall be provided.

407.3.4.1 Visible Indicators. Indicators shall be located above the car control panel or above the door. Numerals shall be 1/2 inch (13 mm) high minimum. A display shall be provided in the car with visible indicators to show car destinations. The visible indicators shall extinguish when the call has been answered.

407.3.4.2 Audible Indicators. An automatic verbal announcement which announces the floor at which the car has stopped shall be provided. The announcement shall be 20 dBA minimum and 80 dBA maximum, measured at the annunciator.

407.3.5 Elevator Car Identification. In addition to the *tactile signs* required by 407.2.4, a *tactile* elevator car identification shall be placed immediately below the hoistway *entrance* floor designation. The *characters* shall be 2 inches (51 mm) high and shall comply with 703.2.

Figure 407.3.5

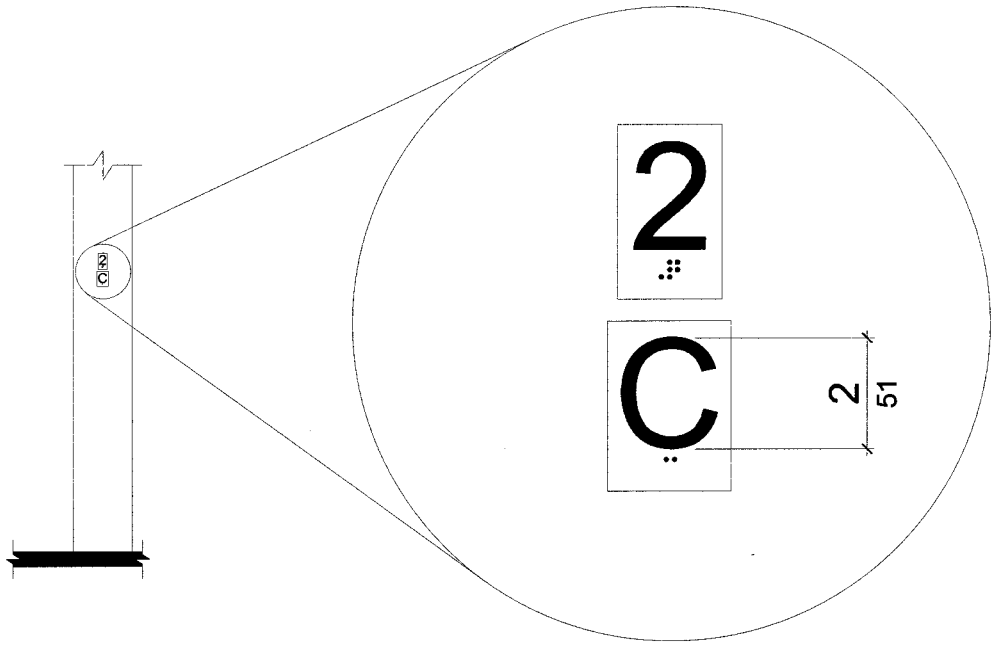

407.4 New Limited-Use/Limited-Application Elevators. New *accessible* limited-use/limited application elevators shall comply with 407.4 and shall comply with ASME/ANSI A17.1, Part XXV.

407.4.1 Automatic Operations. Elevator operation shall be automatic. Each car shall automatically stop at a floor landing within a tolerance of 1/2 inch (13 mm) under rated loading to zero loading conditions.

407.4.2 Call Buttons. Call buttons in elevator lobbies and halls shall be located vertically between 35 inches (890 mm) and 48 inches (1220 mm) above the floor, measured to the centerline of the button. Such call buttons shall have visible signals to indicate when each call is registered and when each call is answered. Call buttons shall be 3/4 inch (19 mm) minimum in the smallest dimension, and shall be raised or flush. The button that designates the up direction shall be located above the button that designates the down direction. Objects located beneath hall call buttons shall protrude into the floor area adjacent to the hoistway *entrance* 4 inches (100 mm) maximum.

407.4.3 Hall Signals. A visible and audible signal complying with 407.2.3 shall be provided in the car or at each hoistway *entrance* to indicate the direction of travel.

407.4.4 Tactile Signs on Hoistway Entrances. *Tactile character* and Braille floor designations shall be provided on both jambs of elevator hoistway *entrances* and shall be 60 inches (1525 mm) above the floor measured from the baseline of the *characters*. Such *characters* shall be 2 inches (51 mm) high minimum and shall comply with 703.2.

407.4.5 Door Operation. Elevator hoistway doors shall be either swinging or horizontally sliding type. Elevator hoistway and car doors shall open and close automatically. Horizontally sliding type hoistway and car doors shall comply with 407.2.5. Swinging hoistway doors shall conform to 404. Swinging doors shall be low-energy power-operated and shall comply with ANSI/BHMA A156.1.9. Power-operated swing doors shall remain open for 20 seconds minimum when activated.

407.4.6 Inside Dimensions of Elevator Cars. Elevator cars shall provide a clear width of 42 inches (1065 mm) minimum and a clear depth of 54 inches (1370 mm) minimum. For installations in existing *buildings* or *facilities*, elevator cars shall provide a clear width of 36 inches (915 mm) minimum, a clear depth of 54 inches (1370 mm) minimum, and a net clear platform area of 15 square feet (1.4 m^2) minimum. Car doors shall be positioned at the narrow end of the car and shall provide a clear width of 32 inches (815 mm) minimum.

Figure 407.4.6

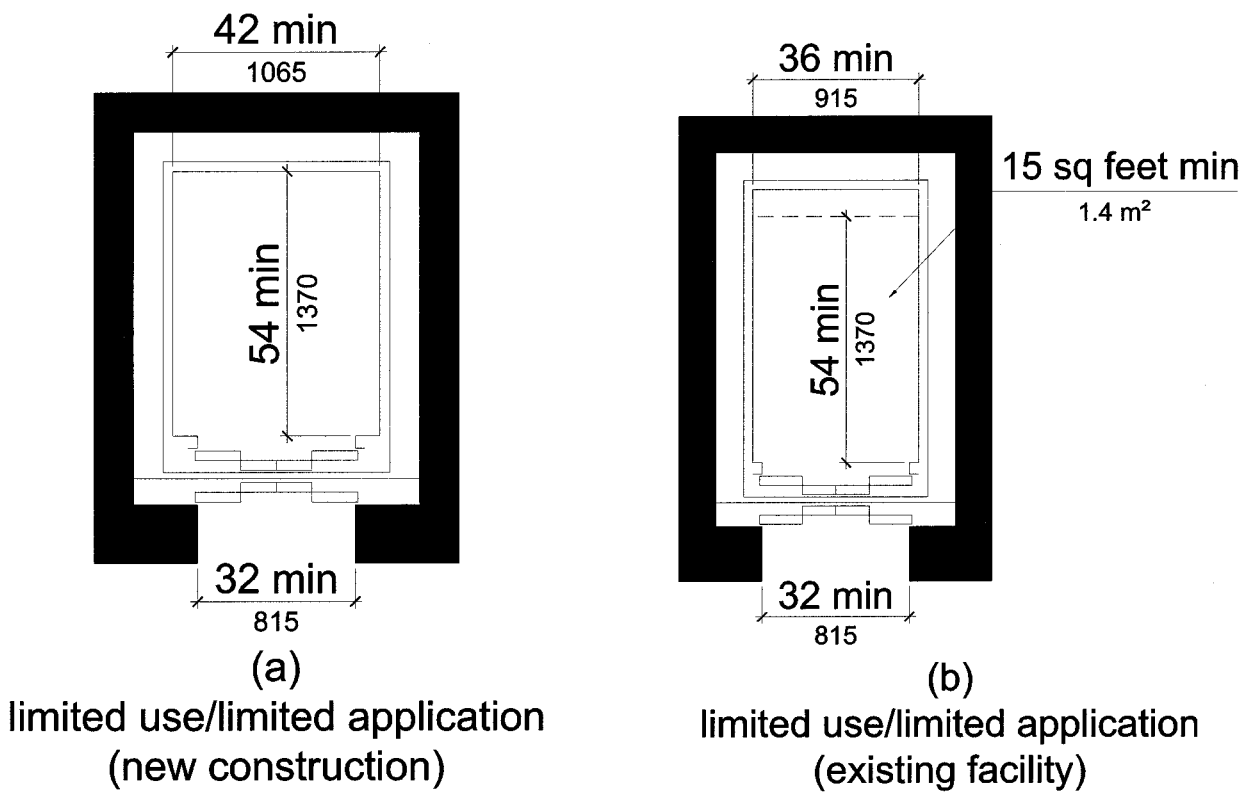

407.4.7 Floor Surfaces. Floor surfaces in elevator cars shall comply with 302. The horizontal distance between the car platform sill and the edge of any hoistway landing shall be 1-1/4 inches (32 mm) maximum.

407.4.8 Illumination Levels. The level of illumination at the car controls, platform, and car threshold and landing sill shall be 5 footcandles (53.8 lux) minimum.

407.4.9 Car Controls. Elevator controls shall comply with 407.2.11. Controls shall be centered on a side wall and shall comply with 309.

407.4.10 Emergency Communications. Car emergency signaling devices complying with 407.2.13 shall be provided.

407.5 Existing Elevators. *Altered elements* of existing *destination-oriented elevators* shall comply with 407.3. *Altered elements* of existing limited-use/limited-application elevators shall comply with 407.4. *Altered elements* of all other existing elevators shall comply with 407.2.1, 407.2.4, 407.2.6, 407.2.7, 407.2.9, 407.2.10 and 407.2.13 and with 407.5 or shall comply with 407.2. They shall be passenger elevators as classified by ASME/ANSI A17.1.

407.5.1 Call Buttons. Call buttons in elevator lobbies and halls shall be located vertically between 35 inches (890 mm) and 54 inches (1370 mm) above the floor, measured to the centerline of the button. A clear floor or ground *space* complying with 305 shall be provided. The button that designates the up direction shall be located above the button that designates the down direction. Keypad controls, if provided, shall comply with 407.2.11.

Figure 407.5.1

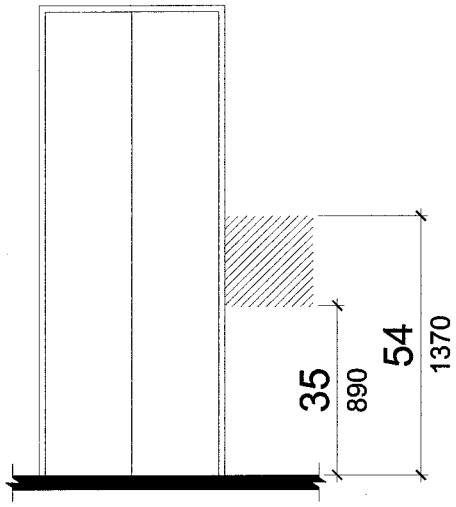

407.5.2 Hall Signals. A visible and audible signal at each hoistway *entrance* to indicate which car is answering a call or in-car signals complying with 407.2.3 shall be provided. Audible signals shall sound once for the up direction and twice for the down direction, or shall have verbal annunciators that state the word "up" or "down". If new hall signals are installed, they shall comply with 407.2.3.

407.5.3 Door Operation. Power-operated horizontally sliding car and hoistway doors opened and closed by automatic means shall comply with 407.2.5. Existing manually operated hoistway swing doors shall comply with 404.2.3 and 404.2.9. A power-operated car door that opens and maintains a 32 inches (815 mm) minimum clear width shall be provided. Closing of the car door shall not be initiated until the hoistway door is closed. Car gates are prohibited.

407.5.4 Inside Dimensions of Elevator Cars. The inside dimensions of elevator cars shall comply with 407.2.8.

EXCEPTION: This requirement shall not apply to existing elevator car configurations that provide a clear floor area of 16 square feet (1.5 m^2) minimum, and provide 54 inches (1370 mm) minimum inside clear depth and 36 inches (915 mm) minimum clear width.

Figure 407.5.4 Exception

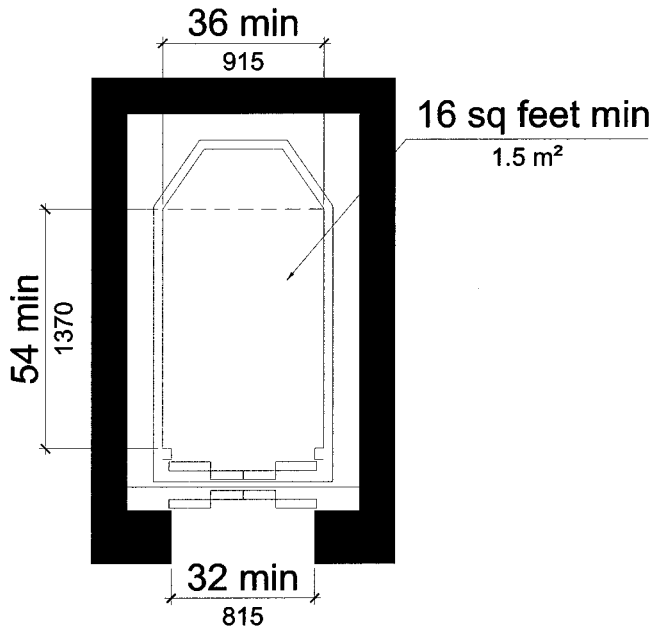

407.5.5 Car Controls. Elevator controls shall comply with 407.5.5.

407.5.5.1 Buttons. Control buttons shall be 3/4 inch (19 mm) minimum in their smallest dimension. Control buttons shall be raised, flush or recessed. Where the car operating panel is changed, control buttons shall comply with 407.2.11.1.

Figure 407.5.5.1

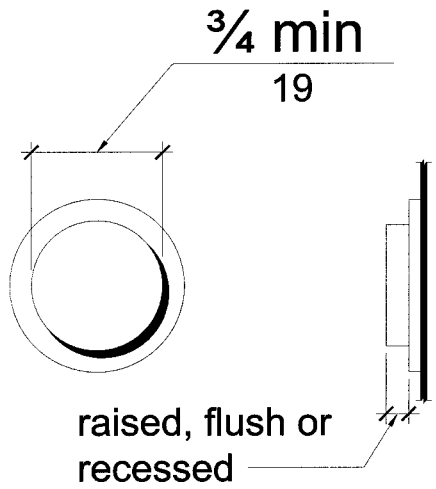

407.5.5.2 Designations and Indicators for Control Buttons. Control buttons shall comply with 407.2.11.2.

EXCEPTION: Where *space* on an existing car operating panel precludes *tactile* markings to the left of the controls, markings shall be placed as near to the control as possible.

407.5.5.3 Height. Floor buttons shall be located 54 inches (1370 mm) maximum above the floor for parallel approach and 48 inches (1220 mm) maximum for front approach. Where the panel is changed, it shall comply with 407.2.11.3.

407.5.5.4 Operating Panels. Where a new car operating panel complying with 407.2.11 is provided, existing car operating panels shall not be required to comply with 407.2.11.

407.5.6 Car Position Indicators. Where a new car position indicator is provided, the indicator shall comply with 407.2.12.

407.5.7 Identification. *Accessible* elevators shall be clearly identified with the International Symbol of Accessibility complying with 703.7, unless all elevators in the *building* or *facility* are *accessible*.

408 Wheelchair (Platform) Lifts

408.1 General. *Wheelchair* (platform) lifts shall comply with ASME/ANSI A17.1 and with 302, 305 and 309. *Wheelchair* (platform) lifts shall not be attendant-operated and shall provide unassisted entry and exit from the lift.

Advisory 408.1
Inclined stairway chairlifts and inclined and vertical platform lifts are available for short-distance vertical transportation. Because an *accessible route* requires an 80 inch (2030 mm) vertical clearance, care should be taken in selecting lifts as they may not be equally suitable for use by *wheelchair* users and standees. If a lift does not provide 80 inch (2030 mm) vertical clearance, it cannot be considered part of an *accessible route* in new construction.

408.2 Doors and Gates. Lifts shall have low-energy power-operated doors or gates complying with 404.3. Doors and gates shall remain open for 20 seconds minimum. End doors shall be 32 inches (815 mm) minimum clear width. Side doors shall be 42 inches (1065 mm) minimum clear width.

Figure 408.2

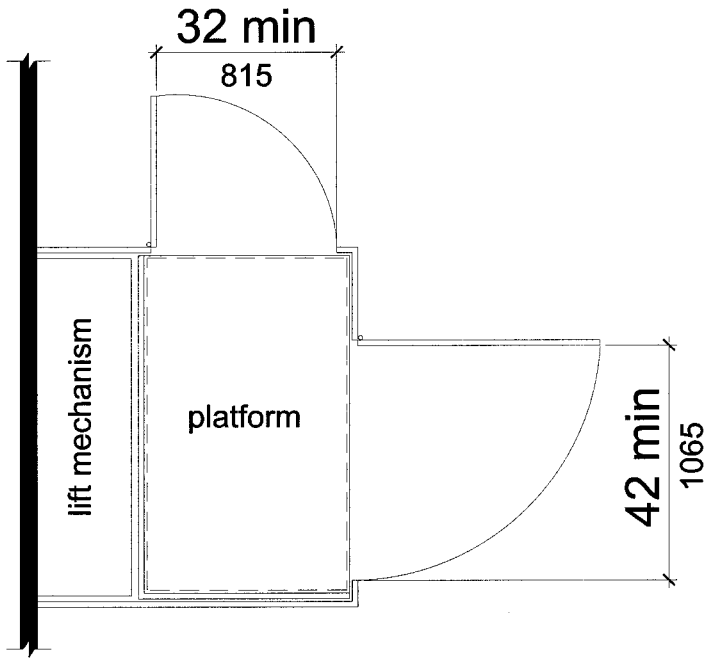

EXCEPTION: Lifts having doors or gates on opposite sides shall be permitted to have self-closing manual doors or gates.

409 Accessible Means of Egress

409.1 General. Each required *accessible means of egress* shall be continuous to a *public way* and shall consist of one or more of the following components*: accessible routes* complying with 402, exit stairways complying with 409.2, elevators complying with 409.3, horizontal exits or smoke barriers. *Wheelchair* (platform) lifts shall not serve as part of an *accessible means of egress.*

409.2 Exit Stairways. An exit stairway to be considered part of an *accessible means of egress* shall conform to 504 and shall have a clear width of 48 inches (1220 mm) minimum between handrails and shall either incorporate an *area of refuge* within an enlarged floor-level landing or shall be accessed from either an *area of refuge* complying with 410 or a horizontal exit.

EXCEPTIONS: 1. This requirement shall not apply to exit stairways serving a single guest room.
2. This requirement shall not apply to exit stairways in *buildings* or *facilities* protected throughout by a supervised automatic sprinkler system.

Advisory 409.2 Exception 2
Supervised automatic sprinkler systems have built-in signals for monitoring features of the system which indicate conditions that will impair the satisfactory operation of the sprinkler system.

3. The clear width of 48 inches (1220 mm) between handrails is not required for exit stairways accessed from a horizontal exit.
4. This requirement shall not apply to exit stairways serving open parking garages.

409.3 Elevators. An elevator to be considered part of an *accessible means of egress* shall comply with the requirements of Rule 211 of ASME/ANSI A17.1 and standby power shall be provided. The elevator shall be accessed from either an *area of refuge* complying with 410 or a horizontal exit.

EXCEPTIONS: 1. Elevators are not required to be accessed from an *area of refuge* or horizontal exit in open parking garages.
2. Elevators are not required to be accessed from an *area of refuge* or horizontal exit in *buildings* and *facilities* protected throughout by a supervised automatic sprinkler system.

410 Areas of Refuge

410.1 General. Where *areas of refuge* are required, they shall comply with 410.

EXCEPTION: *Areas of refuge* are not required in detention and correctional *facilities.*

410.2 Location. Each *area of refuge* shall be accessed from the *space* it serves by an *accessible route* which serves as an *accessible means of egress.* The maximum travel distance to an *area of refuge* shall not exceed the travel distance permitted for the occupancy by the *administrative authority.* Every *area of refuge* shall have direct access to an exit stairway complying with 409.2 or an elevator complying with 409.3.

410.3 Size. Each *area of refuge* shall be sized to accommodate one *wheelchair space* complying with 305.3 for each 200 occupants or fraction thereof, based on the occupant load of the *area of refuge* and all areas served by the *area of refuge*. Such *wheelchair spaces* shall not overlap the required means of egress width. Access to any required *wheelchair space* shall not be through more than one adjoining *wheelchair space*.

410.4 Construction. Each *area of refuge* shall be separated from the remainder of the *story* by a smoke barrier having a one-hour minimum fire-resistance rating. Smoke barriers shall extend to the floor or roof deck above. Doors in the smoke barrier shall have a 20 minute minimum fire-resistance rating. Doors shall be self-closing or automatic closing by smoke detection. HVAC openings in smoke barriers, where permitted, shall be ducted and provided with a smoke-actuated damper designed to resist the passage of smoke.

410.5 Smoke Resistance. Every *area of refuge* shall be designed to prevent the intrusion of smoke.

EXCEPTIONS: 1. This requirement shall not apply where the *areas of refuge* and all areas served by the *area of refuge* are protected by a supervised automatic sprinkler system.
2. This requirement shall not apply to *areas of refuge* located within an exit stair enclosure.

410.5.1 Elevator Lobby. Where an elevator lobby is used as an *area of refuge*, the elevator hoistway and lobby shall be pressurized to comply with the requirements for smokeproof enclosures, except where elevators are in an *area of refuge* formed by a horizontal exit or smoke barrier.

410.6 Communication System. Every *area of refuge* shall be provided with an *accessible* two-way communication system between the *area of refuge* and a central control point. The communication system shall have both audible and visible signals.

Advisory 410.6
The two-way communication system must be equipped with both audible signals and visual signals and cannot operate solely through voice communication. Audible signals can include voice output or recorded messages. A button that lights to indicate that help is on the way when the call is answered is an acceptable visual signal.

410.7 Instructions. In each *area of refuge* provided with a two-way communication system, instructions on the use of the area under emergency conditions shall be posted adjacent to the communications system. The instructions shall include:

1. Directions to other means of egress.
2. Advice that persons able to use the exit stairs do so as soon as possible unless they are assisting others.
3. Information on planned availability of assistance in the use of stairs or supervised operation of elevators and how to summon such assistance.
4. Directions for use of emergency communications system.

410.8 Identification. Each *area of refuge* shall be identified by a *tactile sign* stating "Area of Refuge" complying with 703.2 and including the International Symbol of Accessibility complying with 703.7. A *sign* shall be located at each door providing access to the *area of refuge*. The *sign* shall be illuminated as required for exit *signs* where exit *sign* illumination is required.

CHAPTER 5: GENERAL SITE AND BUILDING ELEMENTS

501 General

501.1 Scope. General *site* and *building elements* required to be *accessible* by Chapter 2 shall comply with the applicable provisions of this chapter.

502 Parking Spaces

502.1 General. Car and van parking *spaces* required to be *accessible* shall comply with 502.

502.2 Vehicle Spaces. Car and van parking *spaces* shall be 96 inches (2440 mm) wide minimum, shall be marked to define the width, and shall have an adjacent access aisle complying with 502.3.

Figure 502.2

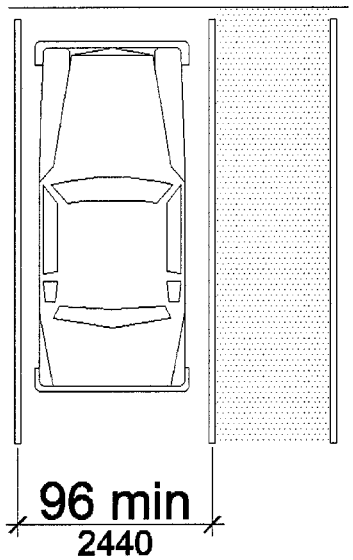

502.3 Access Aisle. Access aisles serving parking *spaces* shall comply with 502.3. Access aisles shall adjoin an *accessible route*. Two parking *spaces* shall be permitted to share a common access aisle.

Figure 502.3

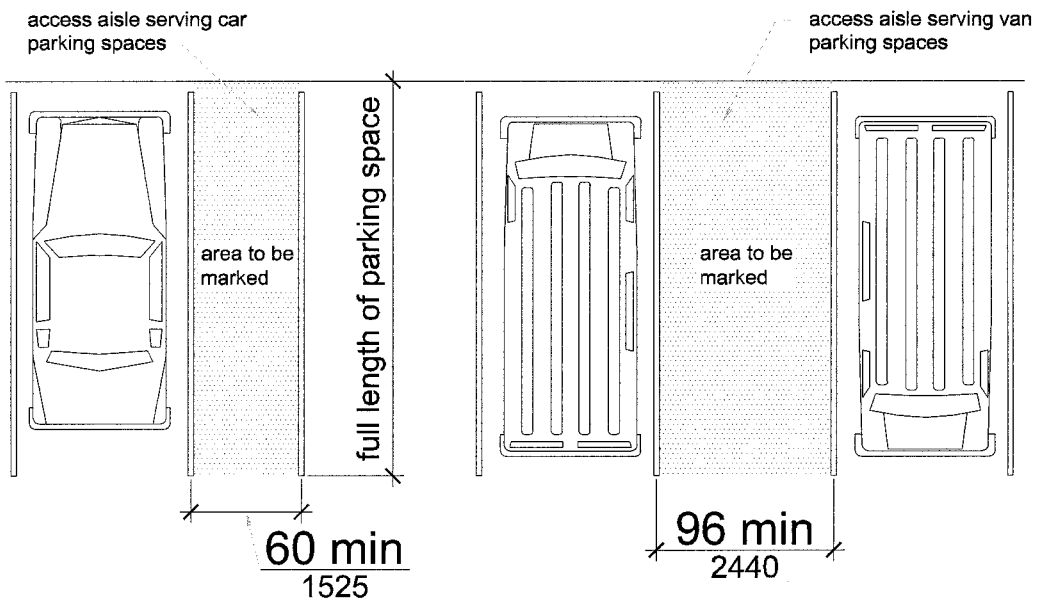

502.3.1 Width. Access aisles serving car parking *spaces* shall be 60 inches (1525 mm) wide minimum. Access aisles serving van parking *spaces* shall be 96 inches (2440 mm) wide minimum.

502.3.2 Length. Access aisles shall extend the full length of the parking *spaces* they serve.

502.3.3 Marking. Access aisles shall be marked so as to discourage parking in them.

Advisory 502.3.3

The method and color of marking are not specified in this document but may be addressed by State or local laws or regulations. Since van access aisles are required to be as wide as the *accessible* parking *space*, it is important that they be clearly marked. Bollards or other barriers can help prevent misuse of the aisle provided that they do not obstruct the access aisle or required connecting *accessible route*. If used, bollards must be placed at the boundary of the access aisle so they do not prevent the deployment of *wheelchair* lifts or the use of mobility aids.

502.4 Floor or Ground Surfaces. Parking *spaces* and access aisles serving them shall comply with 302. Changes in level are not permitted. Access aisles shall be at the same level as the parking *spaces* they serve.

Advisory 502.4
Access aisles are required to be level in all directions to provide a level surface for *wheelchair* transfer to and from vehicles.

EXCEPTION: Slopes not steeper than 1:48 shall be permitted.

502.5 Vertical Clearance. Van parking *spaces*, access aisles serving them, and a vehicular route from an *entrance* to van parking *spaces* and from van parking *spaces* to an exit shall provide a vertical clearance of 98 inches (2490 mm) minimum.

502.6 Identification. Where *accessible* parking *spaces* are required to be identified by *signs*, the *signs* shall include the International Symbol of Accessibility complying with 703.7. Such *signs* shall be 60 inches (1525 mm) minimum above the floor or ground surface measured to the bottom of the *sign*.

503 Passenger Loading Zones

503.1 General. Passenger loading zones required to be *accessible* shall comply with 503.

503.2 Vehicle Pull-up Space. Passenger loading zones shall provide a vehicular pull-up *space* 96 inches (2440 mm) minimum in width, 20 feet (6100 mm) minimum in length and an adjacent access aisle complying with 503.3.

503.3 Access Aisle. Access aisles serving passenger loading zones shall comply with 503.3. Access aisles shall adjoin an *accessible route*.

Figure 503.3

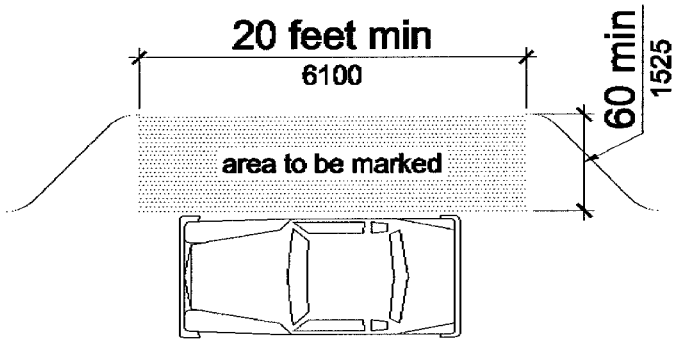

503.3.1 Width. Access aisles serving vehicle pull-up *spaces* shall be 60 inches (1525 mm) wide minimum.

503.3.2 Length. Access aisles shall be 20 feet (6100 mm) minimum in length and shall extend the full length of the vehicle pull-up *spaces* they serve.

503.3.3 Marking. Access aisles shall be marked so as to discourage parking in them.

503.4 Floor and Ground Surfaces. Vehicle pull-up *spaces* and access aisles serving them shall comply with 302. Changes in level are not permitted. Access aisles shall be at the same level as the vehicle pull-up *space* they serve.

EXCEPTION: Slopes not steeper than 1:48 shall be permitted.

503.5 Vertical Clearance. Vehicle pull-up *spaces*, access aisles serving them, and a vehicular route from an *entrance* to the passenger loading zone, and from the passenger loading zone to an exit, shall provide a vertical clearance of 114 inches (2895 mm) minimum.

504 Stairways

504.1 General. Stairs required to be *accessible* shall comply with 504.

Advisory 504.1
Although these requirements do not mandate handrails on stairs that are not part of a means of egress, State or local *building* codes may require handrails.

504.2 Treads and Risers. All steps on a flight of stairs shall have uniform riser heights and uniform tread depths. Risers shall be 4 inches (100 mm) minimum in height and 7 inches (180 mm) maximum in height. Treads shall be 11 inches (280 mm) minimum in depth, measured from riser to riser.

Figure 504.2

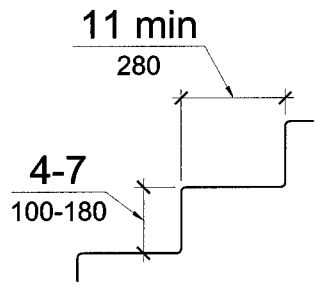

504.3 Open Risers. Open risers are not permitted.

504.4 Tread Surface. Stair treads shall comply with 302. Changes in level are not permitted.

EXCEPTION: Treads shall be permitted to have a slope not steeper than 1:48.

504.5 Nosings. The radius of curvature at the leading edge of the tread shall be 1/2 inch (13 mm) maximum. Nosings that project beyond vertical risers shall have the underside of the leading edge curved or beveled. If not vertical, risers shall slope under the tread at an angle of 30 degrees maximum from vertical; however, the permitted projection of the nosing shall be 1-1/2 inches (38 mm) maximum beyond the rear of the tread below.

Figure 504.5

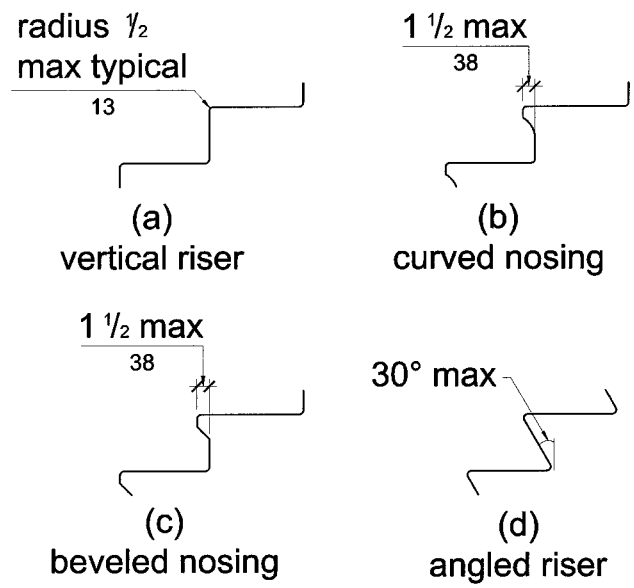

504.6 Handrails. Stairs shall have handrails complying with 505.

504.7 Wet Conditions. Landings subject to wet conditions shall be designed to prevent the accumulation of water.

505 Handrails

505.1 General. Handrails required by 405 at *ramps* or 504 at stairs shall comply with 505.

505.2 Where Required. Handrails shall be provided on both sides of stairs and *ramps.*

EXCEPTIONS: 1. Handrails are not required on both sides of aisle stairs and aisle *ramps* provided with a handrail at either side or within the aisle width.
2. Handrails are not required on *ramps* with a rise of 6 inches (150 mm) maximum.

505.3 Continuity. Handrails shall be continuous within the full length of each stair flight or *ramp* run.

EXCEPTION: Handrails are not required to be continuous in aisles serving seating.

505.4 Height. Top of gripping surfaces of handrails shall be 34 inches (865 mm) minimum and 38 inches (965 mm) maximum vertically above stair nosings and *ramp* surfaces. Handrails shall be at a consistent height above stair nosings and *ramp* surfaces.

Figure 505.4

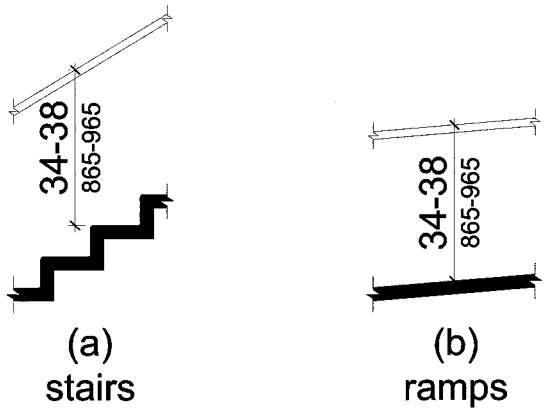

Advisory 505.4

The requirements for stair and *ramp* handrails in this document are for adults. When children are the principle users in a *building* or *facility* (e.g., elementary schools), a second set of handrails at an appropriate height can assist them and aid in preventing accidents. A maximum height of 28 inches (710 mm) measured to the top of the gripping surface from the ramp surface or stair nosing is recommended for handrails designed for children. Sufficient vertical clearance between upper and lower handrails, 9 inches (230 mm) minimum, should be provided to help prevent entrapment.

505.5 Clearance. Clearance between handrail and wall shall be 1-1/2 inches (38 mm) minimum.

Figure 505.5

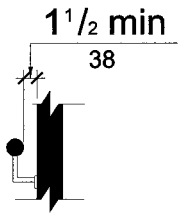

505.6 Gripping Surface. Gripping surfaces shall be continuous, without interruption by newel posts, other construction *elements*, or obstructions.

EXCEPTION: Handrail brackets or balusters attached to the bottom surface of the handrail shall not be considered obstructions provided they comply with the following:

a. not more than 20 percent of the handrail length is obstructed;

b. horizontal projections beyond the sides of the handrail occur 2-1/2 inches (64 mm) minimum below the bottom of the handrail; and

Figure 505.6 Exception

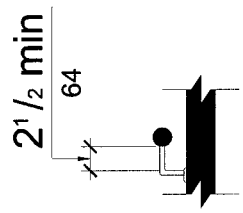

c. edges have a 1/8 inch (3.2 mm) minimum radius.

505.7 Cross Section. Handrails shall have a circular cross section with an outside diameter of 1-1/4 inches (32 mm) minimum and 2 inches (51 mm) maximum, or shall provide equivalent graspability in accordance with 505.7.1.

Figure 505.7

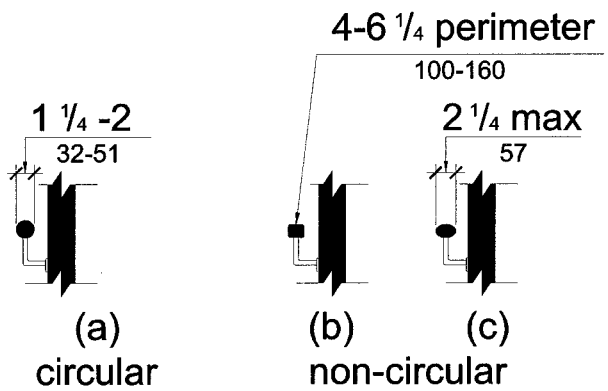

505.7.1 Non-Circular Cross Sections. Non-circular cross sections shall have a perimeter dimension of 4 inches (100 mm) minimum and 6-1/4 inches (160 mm) maximum, and a cross-section dimension of 2-1/4 inches (57 mm) maximum.

505.8 Surfaces. Handrails and any wall or other surfaces adjacent to them shall be free of any sharp or abrasive *elements*. Edges shall have a 1/8 inch (3.2 mm) minimum radius.

505.9 Fittings. Handrails shall not rotate within their fittings.

505.10 Handrail Extensions. Handrails shall extend beyond stair runs and *ramp* runs in accordance with 505.10.

EXCEPTIONS: 1. Extensions are not required for continuous handrails at the inside turn of switchback or dogleg stairs and *ramps*.
2. Extensions are not required for handrails in aisles serving seating where the handrails are necessarily discontinuous to provide access to seating and to permit crossovers within the aisle.
3. In *alterations*, full extensions of handrails shall not be required where such extensions would be hazardous or impossible due to plan configuration.

505.10.1 Top and Bottom Extension at Ramps. *Ramp* handrails shall extend horizontally above the landing for 12 inches (305 mm) minimum beyond the top and bottom of *ramp* runs. Such extension shall return to a wall, guard, or the walking surface, or shall be continuous to the handrail of an adjacent *ramp* run.

Figure 505.10.1

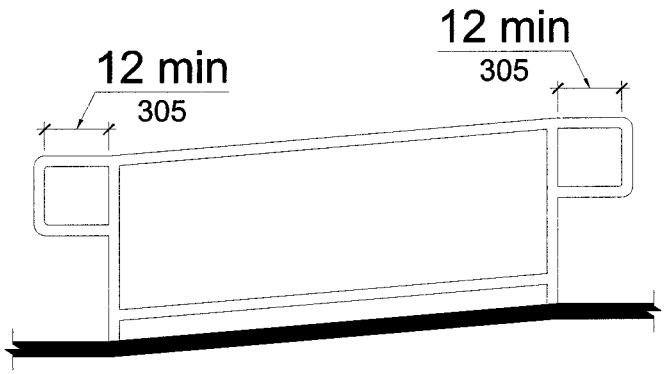

505.10.2 Top Extension at Stairs. At the top of a stair flight, handrails shall extend horizontally above the landing for 12 inches (305 mm) minimum beginning directly above the first riser nosing.

Such extension shall return to a wall, guard, or the walking surface, or shall be continuous to the handrail of an adjacent stair flight.

Figure 505.10.2

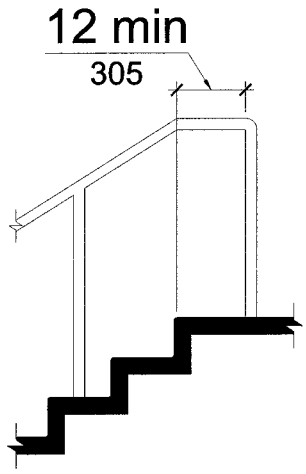

505.10.3 Bottom Extension at Stairs. At the bottom of a stair flight, handrails shall extend at the slope of the stair flight for a horizontal distance equal to one tread depth beyond the last riser nosing and an additional 12 inches (305 mm) minimum horizontally at a height equal to that of the sloping portion of the handrail as measured above the stair nosings. Such extension shall return to a wall, guard, or the walking surface, or shall be continuous to the handrail of an adjacent stair flight.

Figure 505.10.3

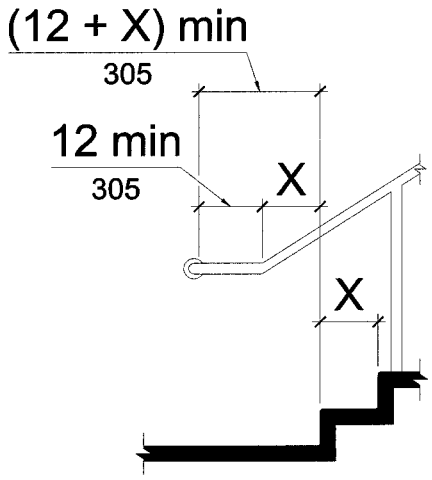

CHAPTER 6: PLUMBING ELEMENTS AND FACILITIES

601 General

601.1 Scope. Plumbing *elements* and *facilities* required to be *accessible* by Chapter 2 shall comply with the applicable provisions of this chapter.

602 Drinking Fountains and Water Coolers

602.1 General. Drinking fountains and water coolers required to be *accessible* shall comply with 307 and 602.

602.2 Clear Floor Space. Units shall have a clear floor or ground *space* complying with 305. A forward approach complying with 602.2.1 shall be provided at wall and post-mounted cantilevered units.

Advisory 602.2
A drinking fountain that provides a parallel approach, although considered *accessible*, requires a person to twist in the *wheelchair* to use the fountain. A drinking fountain that has knee clearance for a forward approach provides greater accessibility.

EXCEPTION: A parallel approach complying with 602.2.2 shall be permitted at wall and post-mounted cantilevered units for *children's use* where the spout is 30 inches (760 mm) maximum above the floor or ground.

602.2.1 Forward Approach. Where a forward approach is provided, the clear floor *space* shall be centered on the unit and shall include knee and toe clearance complying with 306.

602.2.2 Parallel Approach. Where a parallel approach is provided, the clear floor *space* shall be centered on the unit.

602.3 Operable Parts. *Operable parts* shall comply with 309.

602.4 Spout Height. Spout outlets shall be 36 inches (915 mm) maximum above the floor or ground.

Figure 602.4

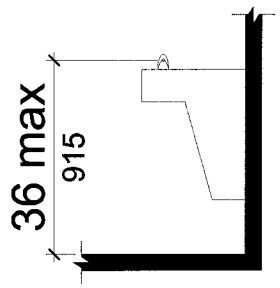

602.5 Spout Location. Units with a parallel approach shall have the spout located 3-1/2 inches (90 mm) maximum from the front edge of the unit, including bumpers. Units with a forward approach shall have the spout located 15 inches (380 mm) minimum from the vertical support and 5 inches (125 mm) maximum from the front edge of the unit, including bumpers.

Figure 602.5

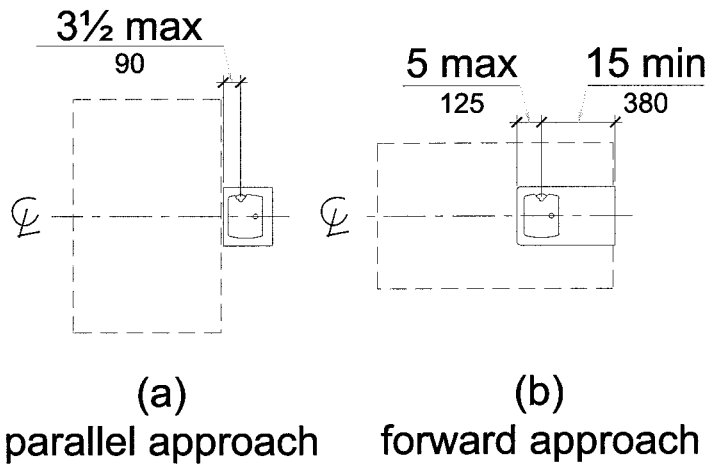

602.6 Water Flow. The spout shall provide a flow of water 4 inches (100 mm) high minimum so as to allow the insertion of a cup or glass under the flow of water. Measured horizontally relative to the front face of the unit, the angle of the water stream from spouts located within 3 inches (75 mm) of the front of the unit shall be 30 degrees maximum and from spouts located between 3 inches (75 mm) and 5 inches (125 mm) from the front shall be 15 degrees maximum.

602.7 Drinking Fountains for Standing Persons. Spout outlets shall be 39 inches (990 mm) minimum and 43 inches (1090 mm) maximum above the floor or ground.

603 Toilet and Bathing Rooms

603.1 General. Toilet and bathing rooms required to be *accessible* shall comply with 603.

603.2 Clear Floor Space.

603.2.1 Wheelchair Turning Space. *Wheelchair* turning *space* complying with 304 shall be provided within the room.

Advisory 603.2.1
Wheelchair turning *space* should be in a location that provides the greatest access. A room should be designed so as to minimize the amount of backing up a person with a disability must do when *accessible elements*, such as toilet stalls, are located along narrow corridors.

603.2.2 Overlap. Required clear floor *spaces*, clearance around water closets, and *wheelchair* turning *space* shall be permitted to overlap.

603.2.3 Doors. Doors shall not swing into the clear floor *space* or clearance required for any fixture.

Advisory 603.2.3
While toilet and bathing room doors cannot swing into clearances for fixtures, they may swing into the *wheelchair* turning *space* as permitted by 304.4.

EXCEPTIONS: 1. Doors to a toilet and bathing room for a single occupant, accessed only through a private office and not for *common use* or *public use* shall be permitted to swing into the clear floor *space* provided the swing of the door can be reversed to meet 603.2.3.
2. This requirement shall not apply where the toilet and bathing room is for individual use and a clear floor *space* complying with 305.3 is provided within the room, beyond the arc of the door swing.

603.3 Mirrors. Mirrors shall be installed with the bottom edge of the reflecting surface 40 inches (1015 mm) maximum above the finish floor.

Figure 603.3

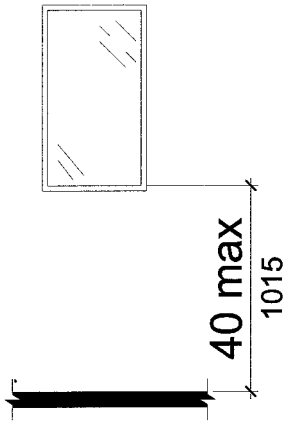

Advisory 603.3

In order for mirrors to be usable by both ambulatory people and people who use *wheelchairs*, the top edge of mirrors should be 74 inches (1880 mm) minimum from the floor or ground. A single, full-length mirror can accommodate a greater number of people including children.

603.4 Coat Hooks and Shelves. *Accessible* coat hooks provided within toilet rooms shall be located within one of the reach ranges specified in 308. Where provided, a fold-down shelf shall be located 40 inches (1015 mm) minimum and 48 inches (1220 mm) maximum above the floor.

604 Water Closets and Toilet Compartments

604.1 General. Water closets and toilet compartments required to be *accessible* shall comply with 604.2 through 604.8.

EXCEPTION: Water closets and toilet compartments for *children's use* shall be permitted to comply with 604.9.

604.2 Location. The water closet shall be located with a wall or partition to the rear and to one side. The centerline of the water closet shall be 16 inches (405 mm) minimum to 18 inches (455 mm)

maximum from the side wall or partition, except that the water closet shall be centered in the non-*wheelchair accessible* toilet compartment specified in 604.8.2.

Figure 604.2

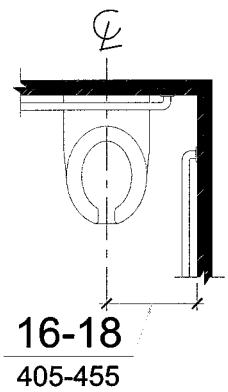

604.3 Clear Floor Space.

604.3.1 Clearance. Clearance around a water closet shall be 60 inches (1525 mm) minimum measured perpendicular from the side wall and 56 inches (1420 mm) minimum measured perpendicular from the rear wall. No other fixtures or obstructions shall be located within the required water closet clearance.

Figure 604.3.1

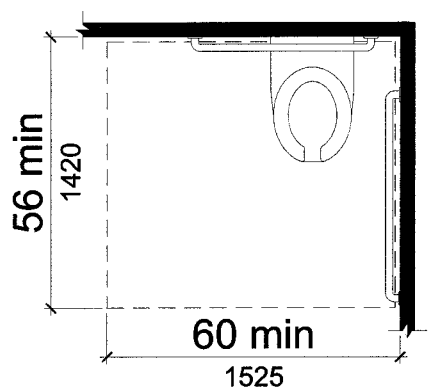

604.3.2 Overlap. The required clearance around the water closet shall be permitted to overlap the fixture, associated grab bars, tissue dispensers, *accessible routes*, clear floor *space* required at other fixtures and the *wheelchair* turning *space*.

604.4 Height. The height of water closets shall be 17 inches (430 mm) minimum to 19 inches (485 mm) maximum measured to the top of the toilet seat. Seats shall not be sprung to return to a lifted position.

Figure 604.4

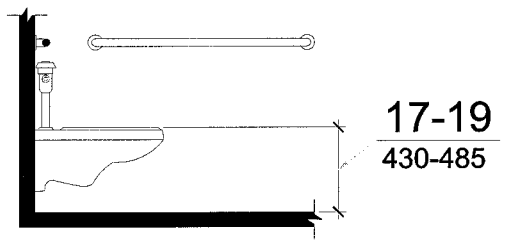

EXCEPTION: This requirement shall not apply to a water closet in a toilet room for a single occupant, accessed only through a private office and not for *common use* or *public use*.

604.5 Grab Bars. Grab bars for water closets shall comply with 609. Grab bars shall be provided on the rear wall and on the side wall closest to the water closet.

EXCEPTION: Grab bars are not required to be installed in a toilet room for a single occupant, accessed only through a private office and not for *common use* or *public use* provided that reinforcement has been installed in walls and located so as to permit the installation of such grab bars.

604.5.1 Side Wall. Side wall grab bar shall be 42 inches (1065 mm) long minimum, located 12 inches (305 mm) maximum from the rear wall and extending 54 inches (1370 mm) minimum from the rear wall.

Figure 604.5.1

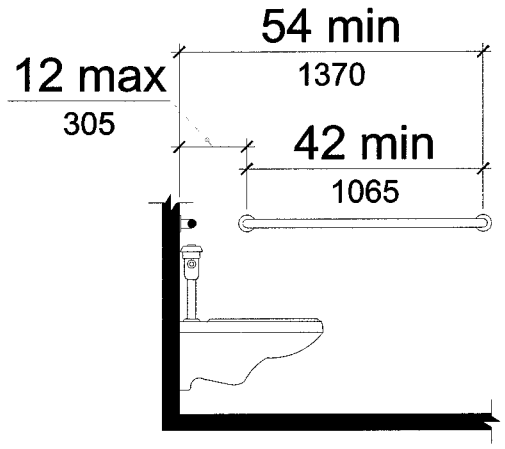

604.5.2 Rear Wall. The rear wall grab bar shall be 24 inches (610 mm) long minimum, centered on the water closet. Where wall *space* permits, the bar shall be 36 inches (915 mm) long minimum with the additional length provided on the transfer side of the water closet.

Figure 604.5.2

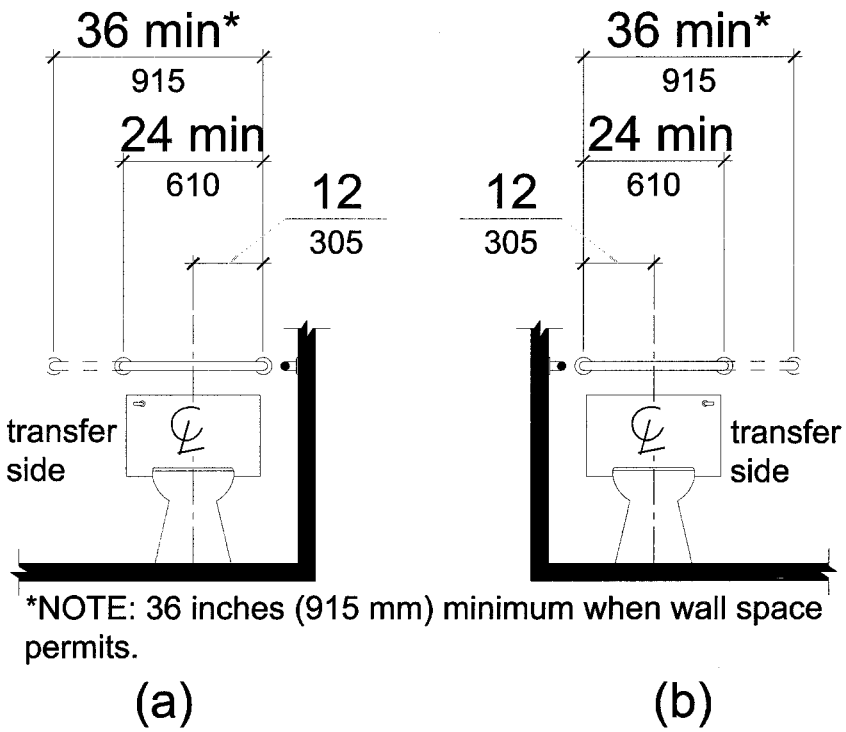

EXCEPTION: If *administrative authorities* require flush controls for flush valves to be located in a position that conflicts with the location of the rear grab bar, then that grab bar may be split or shifted to the open side of the toilet area.

604.6 Flush Controls. Flush controls shall be hand operated or automatic. Hand operated flush controls shall comply with 309.

Advisory 604.6
Flush valves and related plumbing can cause injury or imbalance when a person leans back against them. To prevent this, the plumbing can be located behind walls or to the side of the toilet, or a toilet seat lid can be provided if plumbing valves are directly behind the toilet seat.

604.7 Dispensers. Toilet paper dispensers shall comply with 309.4 and shall be 7 inches (180 mm) minimum and 9 inches (230 mm) maximum in front of the water closet measured to the centerline of the

dispenser. The outlet of the dispenser shall be 15 inches (380 mm) minimum and 48 inches (1220 mm) maximum above the floor. There shall be a clearance of 1 1/2 inches (38 mm) minimum below and 12 inches (305 mm) minimum above the grab bar. Dispensers shall not be of a type that control delivery or that do not allow continuous paper flow.

Figure 604.7

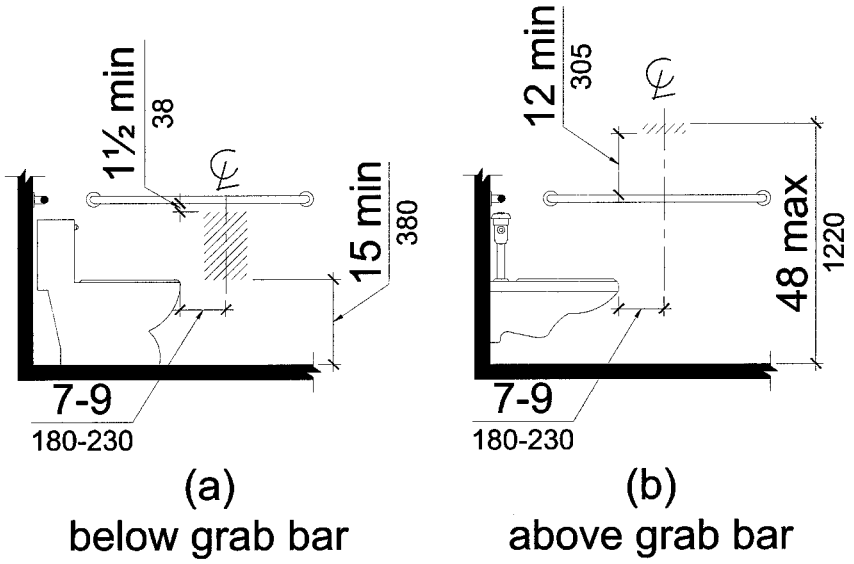

604.8 Toilet Compartments. *Wheelchair accessible* toilet compartments shall meet the requirements of 604.8.1 and 604.8.3. Compartments containing more than one plumbing fixture shall comply with 603. Non-*wheelchair accessible* compartments shall comply with 604.8.2 and 604.8.3.

604.8.1 Wheelchair Accessible Compartments.

604.8.1.1 Size. *Wheelchair accessible* compartments shall be 60 inches (1525 mm) wide minimum measured perpendicular to the side wall, and 56 inches (1420 mm) deep minimum for

wall hung water closets and 59 inches (1500 mm) deep minimum for floor mounted water closets measured perpendicular to the rear wall.

Figure 604.8.1.1

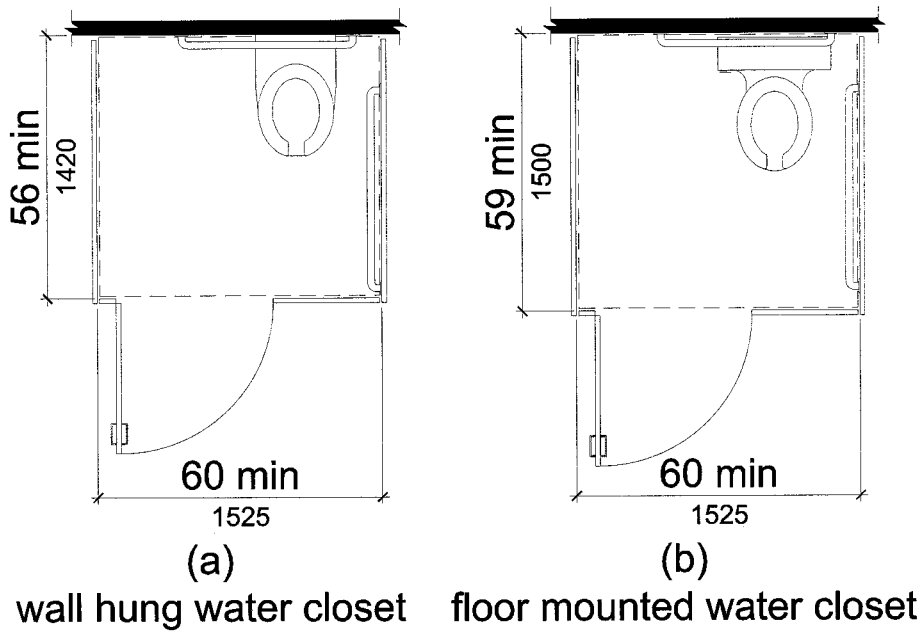

604.8.1.2 Doors. Toilet compartment doors, including door hardware, shall comply with 404 except that if the approach is to the latch side of the compartment door, clearance between the door side of the stall and any obstruction shall be a minimum of 42 inches (1065 mm). The door shall be hinged 4 inches (100 mm) maximum from the side wall or partition farthest from the water closet. The door shall be self-closing. A door pull complying with 404.2.7 shall be placed

on both sides of the door near the latch. Compartment doors shall not swing into the minimum required compartment area.

Figure 604.8.1.2

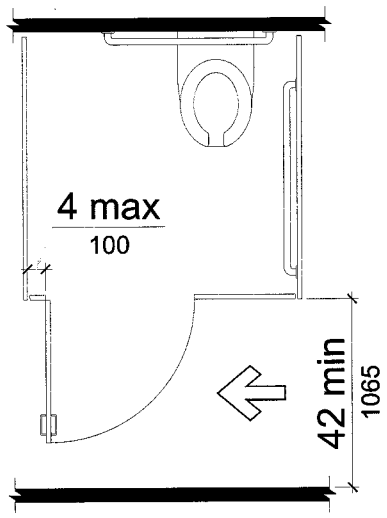

604.8.1.3 Approach. Compartments shall be arranged for left-hand or right-hand approach.

604.8.1.4 Toe Clearance. In *wheelchair accessible* compartments, the front partition and at least one side partition shall provide a toe clearance of 9 inches (230 mm) minimum above the floor and 6 inches (150 mm) deep minimum beyond the compartment-side face of the partition, exclusive of partition support members. Toe clearance at the front partition is not required in a compartment greater than 62 inches (1575 mm) deep with a wall-hung water closet or 65 inches

(1650 mm) deep with a floor-mounted water closet. Toe clearance at the side partition is not required in a compartment greater than 66 inches (1675 mm) wide.

Figure 604.8.1.4

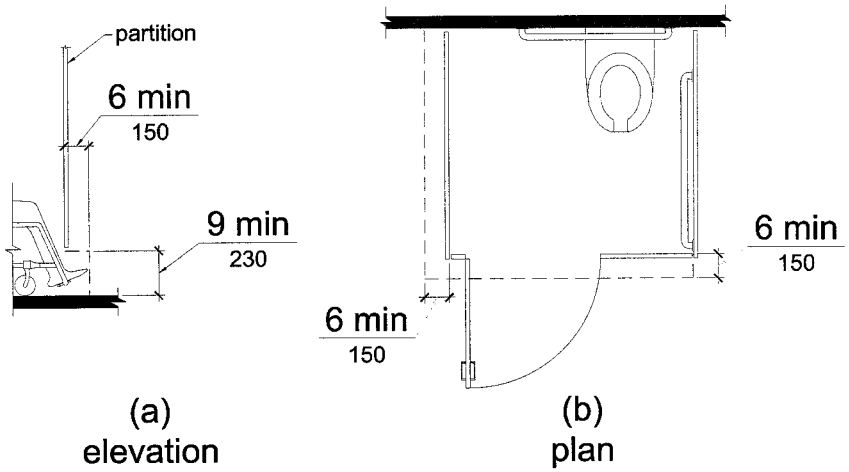

604.8.1.5 Grab Bars. Grab bars shall comply with 609. A side-wall grab bar complying with 604.5.1 located on the wall closest to the water closet and a rear-wall grab bar complying with 604.5.2 shall be provided.

604.8.2 Non-Wheelchair Accessible Compartments.

Figure 604.8.2

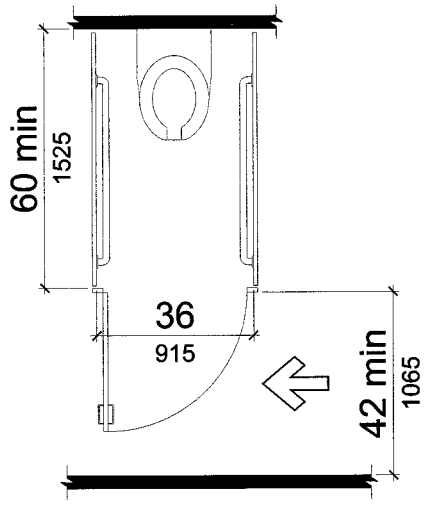

604.8.2.1 Size. Non-*wheelchair accessible* compartments shall be 60 inches (1525 mm) deep minimum and 36 inches (915 mm) wide.

604.8.2.2 Doors. Toilet compartment doors, including door hardware, shall comply with 404 except that if the approach is to the latch side of the compartment door, clearance between the door side of the stall and any obstruction shall be a minimum of 42 inches (1065 mm). The door shall be self-closing. A door pull complying with 404.2.7 shall be placed on both sides of the door near the latch. Compartment doors shall not swing into the minimum required compartment area.

604.8.2.3 Grab Bars. Grab bars shall comply with 609. A side-wall grab bar complying with 604.5.1 shall be provided on both sides of the compartment.

604.8.3 Coat Hooks and Shelves. *Accessible* coat hooks provided within toilet compartments shall be located within one of the reach ranges specified in 308. When provided, a fold-down shelf shall be located 40 inches (1015 mm) minimum and 48 inches (1220 mm) maximum above the floor.

604.9 Water Closets and Toilet Compartments for Children's Use. *Accessible* water closets and toilet compartments for *children's use* shall comply with 604.9.

Advisory 604.9

The requirements in 604.9 are to be followed where the exception for children's water closets in 604.1 is used. The following table provides additional guidance in applying the specifications for water closets for children according to the age group served and reflects the differences in the size, stature, and reach ranges of children ages 3 through 12. The specifications chosen should correspond to the age of the primary user group. The specifications of one age group should be applied consistently in the installation of a water closet and related *elements*.

Specifications for Water Closets Serving Children Ages 3 through 12

	Ages 3 and 4	Ages 5 through 8	Ages 9 through 12
Water Closet Centerline	12 inches (305 mm)	12 to 15 inches (305 to 380 mm)	15 to 18 inches (380 to 455 mm)
Toilet Seat Height	11 to 12 inches (280 to 305 mm)	12 to 15 inches (305 to 380 mm)	15 to 17 inches (380 to 430 mm)
Grab Bar Height	18 to 20 inches (455 to 510 mm)	20 to 25 inches (510 to 635 mm)	25 to 27 inches (635 to 685 mm)
Dispenser Height	14 inches (355 mm)	14 to 17 inches (355 to 430 mm)	17 to 19 inches (430 to 485 mm)

604.9.1 Location. The water closet shall be located with a wall or partition to the rear and to one side. The centerline of the water closet shall be 12 inches (305 mm) minimum to 18 inches (455 mm) maximum from the side wall or partition, except that the water closet shall be centered in the non-wheelchair *accessible* toilet compartment specified in 604.8.2.

604.9.2 Clear Floor Space. Clearance around a water closet shall comply with 604.3.

604.9.3 Height. The height of water closets shall be 11 inches (280 mm) minimum to 17 inches (430 mm) maximum measured to the top of the toilet seat. Seats shall not be sprung to return to a lifted position.

604.9.4 Grab Bars. Grab bars for water closets shall comply with 604.5.

EXCEPTION: If *administrative authorities* require flush controls for flush valves to be located in a position that conflicts with the location of the rear grab bar, then that grab bar may be split or shifted to the open side of the toilet area.

604.9.5 Flush Controls. Flush controls shall be hand operated or automatic. Hand operated flush controls shall comply with 309.2 and 309.4 and shall be installed 36 inches (915 mm) maximum above the floor.

604.9.6 Dispensers. Toilet paper dispensers shall comply with 309.4 and shall be 7 inches (180 mm) minimum and 9 inches (230 mm) maximum in front of the water closet. The outlet of the dispenser shall be 14 inches (355 mm) minimum and 19 inches (485 mm) maximum above the floor. There shall be a clearance of 1 1/2 inches (38 mm) minimum below the grab bar. Dispensers shall not be of a type that control delivery or that do not allow continuous paper flow.

604.9.7 Toilet Compartments. *Accessible* toilet compartments shall meet the requirements of 604.9.7. Compartments containing more than one plumbing fixture shall comply with 603.

604.9.7.1 Wheelchair Accessible Compartments.

604.9.7.1.1 Size. *Wheelchair accessible* compartments shall be 60 inches (1525 mm) wide minimum measured perpendicular to the side wall, and 59 inches (1500 mm) deep minimum measured perpendicular to the rear wall.

604.9.7.1.2 Doors. Toilet compartment doors, including door hardware, shall comply with 404 except that if the approach is to the latch side of the compartment door, clearance between the door side of the stall and any obstruction shall be a minimum of 42 inches (1065 mm). The door shall be hinged 4 inches (100 mm) maximum from the side wall or partition farthest from the water closet. The door shall be self-closing. A door pull complying with 404.2.7 shall be placed on both sides of the door near the latch. Compartment doors shall not swing into the minimum required compartment area.

604.9.7.1.3 Approach. Compartments shall be arranged for left-hand, or for right-hand approach.

604.9.7.1.4 Toe Clearance. In *wheelchair accessible* compartments, the front partition and at least one side partition shall provide a toe clearance of 12 inches (305 mm) minimum above the floor and 6 inches (150 mm) deep minimum beyond the compartment-side face of the partition, exclusive of partition support members.

604.9.7.1.5 Grab Bars. Grab bars shall comply with 609. A side-wall grab bar complying with 604.5.1 located on the wall closest to the water closet and a rear-wall grab bar complying with 604.5.2 shall be provided.

604.9.7.2 Non-Wheelchair Accessible Compartments. Non-wheelchair *accessible* compartments shall comply with 604.8.2.

605 Urinals

605.1 General. Urinals required to be *accessible* shall comply with 605.

605.2 Height and Depth. Urinals shall be the wall-hung type with the rim 17 inches (430 mm) maximum above the floor or ground or the stall-type. Urinals shall provide a minimum depth of 13 1/2 inches (345 mm) measured from the outer face of the urinal rim to the back of the fixture.

Figure 605.2

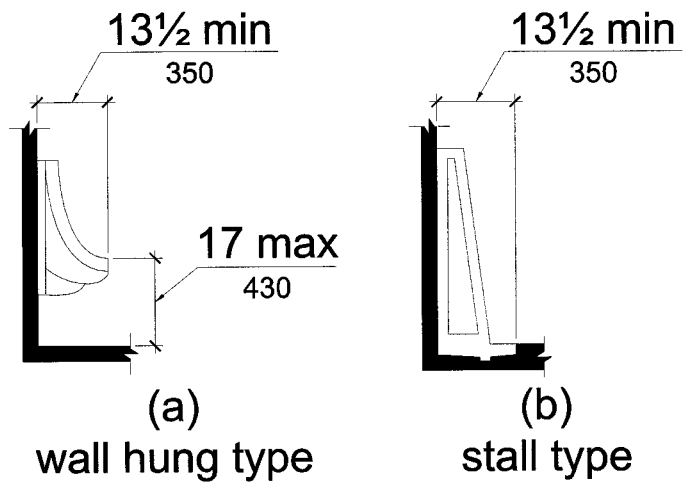

605.3 Clear Floor Space. A clear floor or ground *space* complying with 305 positioned for forward approach shall be provided. This clear *space* shall adjoin or overlap an *accessible route*.

605.4 Flush Controls. Flush controls shall be hand operated or automatic. Hand operated flush controls shall comply with 309.4 and shall be 44 inches (1120 mm) maximum above the floor or ground.

Figure 605.4

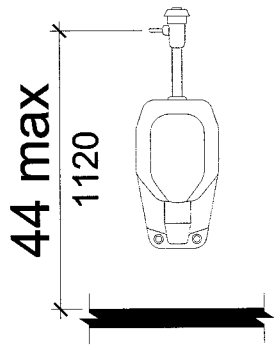

606 Lavatories and Sinks

606.1 General. Sinks, lavatory fixtures, vanities and lavatories required to be *accessible* shall comply with 606.

Advisory 606.1

If soap and towel dispensers are provided, they must be located within the reach ranges specified in 308 and should be usable by a person at the *accessible* lavatory.

606.2 Clear Floor Space. A clear floor *space* complying with 305, positioned for forward approach, and knee and toe clearance complying with 306 shall be provided.

EXCEPTIONS: 1. The dip of the overflow shall not be considered in determining knee and toe clearances.
2. The requirement for knee and toe clearance shall not apply to a lavatory in a toilet and bathing *facility* for a single occupant, accessed only through a private office and not for *common use* or *public use*.
3. The requirement for knee and toe clearance shall not apply to more than one bowl of a multi-bowl sink.
4. A knee clearance of 24 inches (610 mm) minimum above the floor or ground shall be permitted at lavatories and sinks used primarily by children ages 6 through 12 where the rim or counter surface is 31 inches (760 mm) maximum above the floor or ground.
5. A parallel approach shall be permitted in lieu of a forward approach to lavatories and sinks used primarily by children ages 5 and younger.

606.3 Height. Lavatories and sinks shall be installed with the front of the higher of the rim or counter surface 34 inches (865 mm) maximum above the finish floor.

Figure 606.3

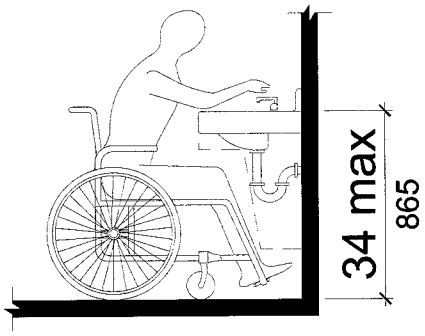

EXCEPTION: This requirement shall not apply to a lavatory in a toilet and bathing *facility* for a single occupant, accessed only through a private office and not for *common use* or *public use*.

606.4 Faucets. Faucets shall comply with 309. Hand-operated, self-closing faucets shall remain open for 10 seconds minimum.

606.5 Exposed Pipes and Surfaces. Water supply and drain pipes under lavatories and sinks shall be insulated or otherwise configured to protect against contact. There shall be no sharp or abrasive surfaces under lavatories and sinks.

607 Bathtubs

607.1 General. Bathtubs required to be *accessible* shall comply with 607.

607.2 Clear Floor Space. Clearance in front of bathtubs shall extend the length of the tub and shall be 30 inches (760 mm) wide minimum. A lavatory complying with 606 shall be permitted at the foot end of

the clear floor *space*. Where a permanent seat is provided at the head end of the tub, the clear floor *space* shall extend a minimum of 12 inches (305 mm) beyond the seat.

Figure 607.2

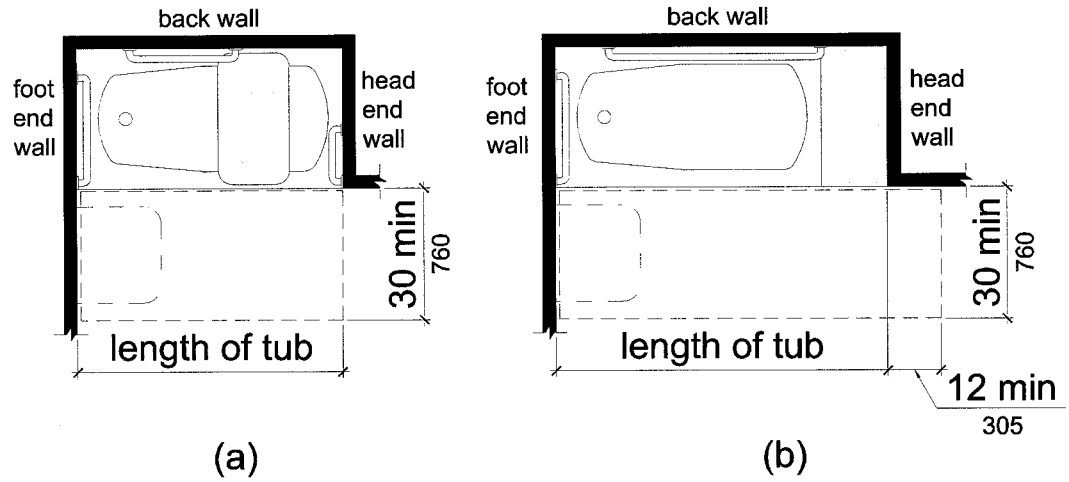

607.3 Seat. A permanent seat at the head end of the tub or a removable in-tub seat shall be provided. Seats shall comply with 610.

607.4 Grab Bars. Grab bars for bathtubs shall comply with 609 and shall be provided in accordance with 607.4.1 and 607.4.2.

Figure 607.4

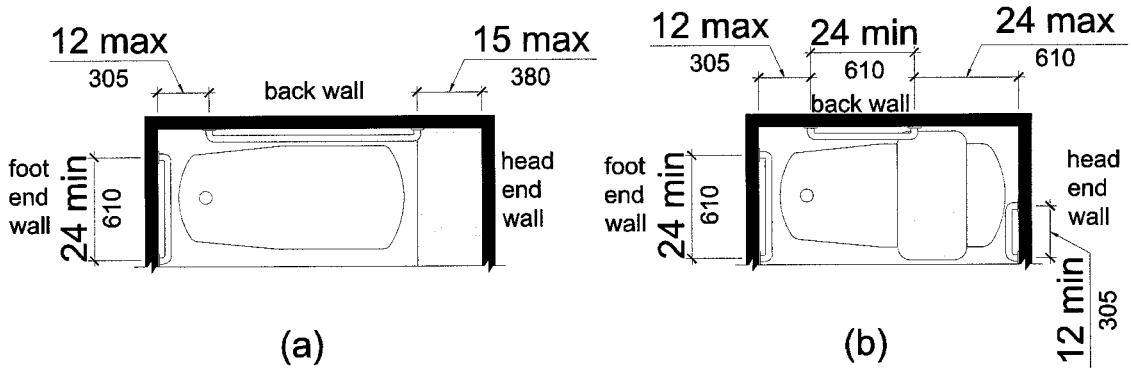

EXCEPTION: Grab bars are not required to be installed in a bathing *facility* for a single occupant accessed only through a private office and not for *common use* or *public use*, provided that

reinforcement has been installed in walls and located so as to permit the installation of such grab bars.

607.4.1 Bathtubs With Permanent Seats. For bathtubs with permanent seats, grab bars shall be provided in accordance with 607.4.1.

607.4.1.1 Back Wall. Two grab bars shall be installed on the back wall, one located in accordance with 609.3 and the other located 9 inches (230 mm) above the rim of the tub. Each grab bar shall be installed 15 inches (380 mm) maximum from the head end wall and 12 inches (305 mm) maximum from the foot end wall.

Figure 607.4.1.1

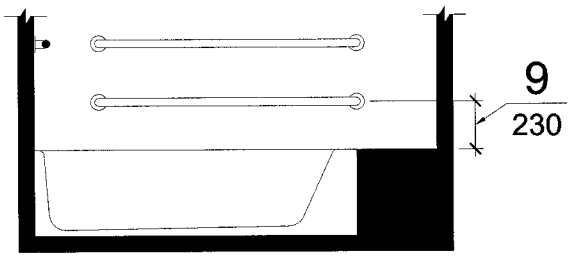

607.4.1.2 Foot End Wall. A grab bar 24 inches (610 mm) long minimum shall be installed on the foot end wall at the front edge of the tub.

607.4.2 Bathtubs Without Permanent Seats. For bathtubs without permanent seats, grab bars shall comply with 607.4.

607.4.2.1 Back Wall. Two grab bars shall be installed on the back wall, one located in accordance with 609.3 and other located 9 inches (230 mm) above the rim of the tub. Each grab bar shall be 24 inches (610 mm) long minimum and shall be installed 24 inches (610 mm) maximum from the head end wall and 12 inches (305 mm) maximum from the foot end wall.

Figure 607.4.2.1

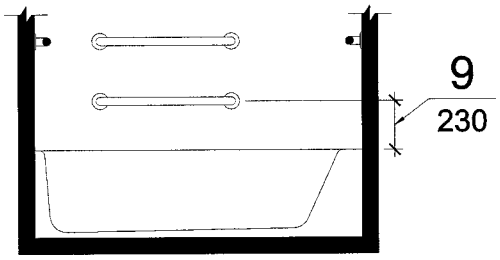

607.4.2.2 Foot End Wall. A grab bar 24 inches (610 mm) long minimum shall be installed on the foot end wall at the front edge of the tub.

607.4.2.3 Head End Wall. A grab bar 12 inches (305 mm) long minimum shall be installed on the head end wall at the front edge of the tub.

607.5 Operable Parts. *Operable parts*, other than drain stoppers, shall be located on an end wall above the tub rim and below the grab bars, and between the front edge of the tub and the mid-point of the width of the tub. *Operable parts* shall comply with 309.4.

Figure 607.5

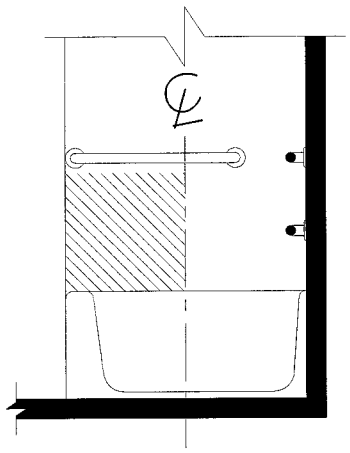

607.6 Shower Spray Unit and Water. A shower spray unit with a hose 59 inches (1500 mm) long minimum that can be used both as a fixed shower head and as a hand-held shower shall be provided. The shower spray unit shall have a water-on and water-off control. If an adjustable-height shower head on a vertical bar is used, the bar shall be installed so as not to obstruct the use of grab bars. Bathtub/shower spray units shall deliver water that is thermal shock protected to 120°F maximum.

607.7 Bathtub Enclosures. Enclosures for bathtubs shall not obstruct *operable parts* or transfer from *wheelchairs* onto bathtub seats or into tubs. Enclosures on bathtubs shall not have tracks installed on the rim of the open face of the tub.

608 Shower Compartments

608.1 General. Shower compartments required to be *accessible* shall comply with 608.

Advisory 608.1
Shower stalls that are 60 inches (1525 mm) wide and have no curb may increase the usability of a bathroom because the shower area provides additional maneuvering *space.*

608.2 Size and Clearances for Shower Compartments.

608.2.1 Transfer Type Shower Compartments. Transfer-type shower compartments shall be 36 inches (915 mm) by 36 inches (915 mm) inside finished dimension measured at the centerpoint of opposing sides and shall have a minimum 36 inch (915 mm) wide entry on the face of the shower compartment. Clear floor *space* of 36 inches (915 mm) wide minimum by 48 inches (1220 mm) long minimum measured from the control wall shall be provided.

Figure 608.2.1

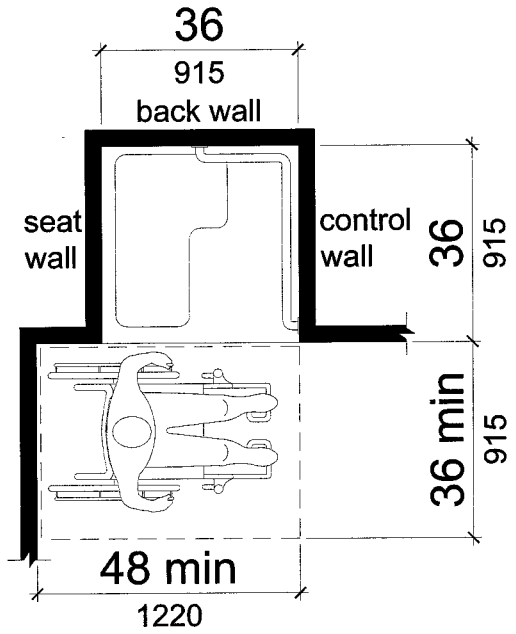

608.2.2 Standard Roll-In Type Shower Compartment. Standard roll-in type shower compartments shall be 30 inches (760 mm) minimum by 60 inches (1525 mm) minimum clear inside dimension measured at the centerpoint of opposing sides and shall have a minimum 60 inches (1525 mm) wide entry on the face of the shower compartment. A 30 inch (760 mm) wide minimum by 60 inch (1525 mm) long minimum clear floor *space* shall be provided adjacent to the open face of the shower compartment. A lavatory complying with 606 shall be permitted at the end of the clear *space,*

opposite the shower compartment end where the seat is installed and opposite the shower compartment side where shower controls are located.

Figure 608.2.2

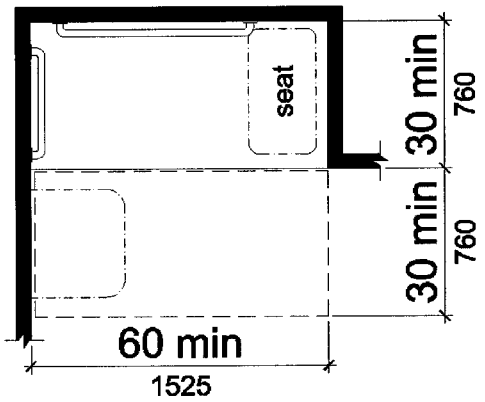

608.2.3 Alternate Roll-In Type Shower Compartment. Alternate roll-in shower compartments shall be 36 inches (915 mm) in width and 60 inches (1220 mm) minimum in depth. A 36 inch (915 mm) wide minimum entry shall be provided on one side of the stall.

Figure 608.2.3

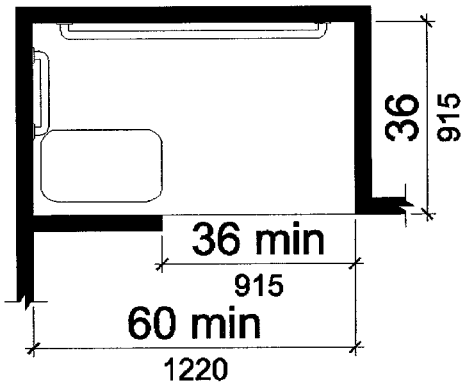

608.3 Grab Bars. Grab bars shall comply with 609 and shall be provided in accordance with 608.3. Where multiple grab bars are used, they shall be installed at the same height.

EXCEPTION: Grab bars are not required to be installed in a shower *facility* for a single occupant, accessed only through a private office and not for *common use* or *public use* provided that reinforcement has been installed in walls and located so as to permit the installation of such grab bars.

608.3.1 Transfer Type Showers. Grab bars shall be extended across the control wall and back wall to a point 18 inches (455 mm) from the control wall.

Figure 608.3.1

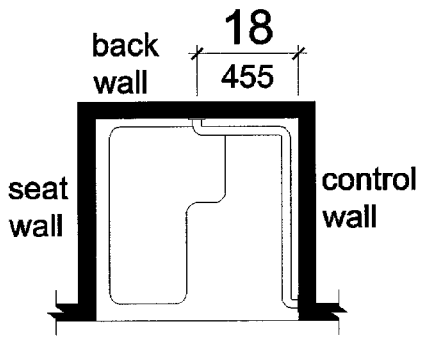

608.3.2 Roll-In Type Showers. Grab bars shall be provided on the three walls of the shower. Grab bars shall be installed 6 inches (150 mm) maximum from the adjacent wall.

EXCEPTIONS: 1. Where a seat is provided in a roll-in type shower, grab bars shall not extend over the seat at the control wall and shall not be located behind the seat.

2. In alternate roll-in type showers, grab bars shall not be required on the side wall opposite the control wall and shall not be located behind the seat.

Figure 608.3.2

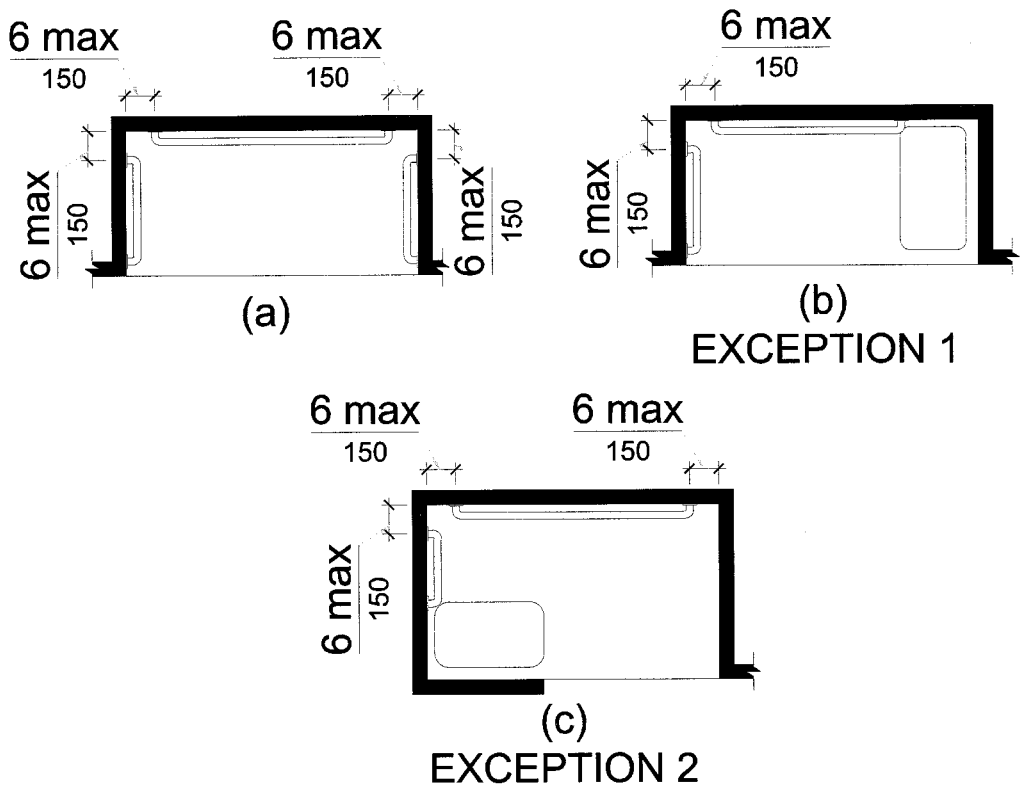

608.4 Seats. An attachable or integral seat shall be provided in transfer-type shower compartments. A folding seat shall be provided in roll-in showers used in *accessible transient lodging* guest rooms. Seats shall comply with 610.

608.5 Operable Parts. Controls and faucets shall comply with 309.4.

608.5.1 Transfer Type Showers. In transfer-type shower compartments controls, faucets, and the shower spray unit shall be installed on the side wall opposite the seat 38 inches (965 mm) minimum

to 48 inches (1220 mm) maximum above the shower floor and shall be located on the control wall 15 inches (380 mm) maximum left or right of the centerline of the seat.

Figure 608.5.1

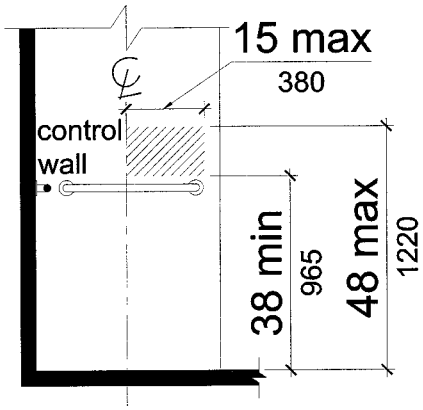

608.5.2 Roll-in Type Shower. Controls in roll-in type shower compartments shall be located above the grab bar but no higher than 48 inches (1220 mm) above the shower floor. In roll-in type shower compartments with seats, the controls, faucets, and the shower spray unit shall be installed on the wall adjacent to the seat wall and shall be located 27 inches (685 mm) maximum from the seat wall. In alternate roll-in type shower compartments, the shower unit and controls shall be installed on the end wall furthest from the compartment entry.

Figure 608.5.2

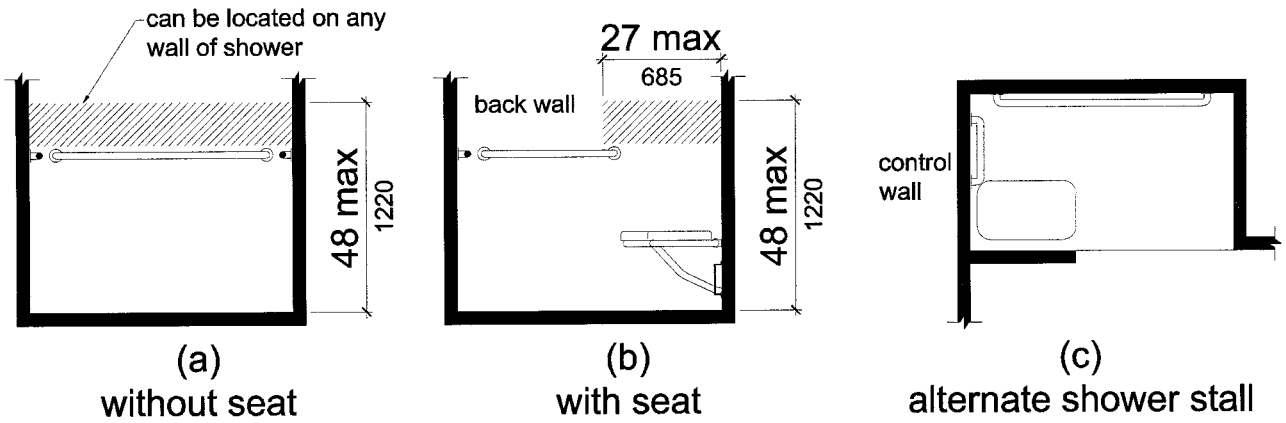

Advisory 608.5.2

In roll-in showers without seats, the shower head and *operable parts* can be located on any of the three walls of the shower without adversely affecting accessibility.

608.6 Shower Spray Unit and Water. A shower spray unit with a hose 59 inches (1500 mm) long minimum that can be used both as a fixed shower head and as a hand-held shower shall be provided. The shower spray unit shall have a water-on and water-off control. If an adjustable-height shower head on a vertical bar is used, the bar shall be installed so as not to obstruct the use of grab bars. Shower spray units shall deliver water that is thermal shock protected to 120°F maximum.

608.7 Curbs. Thresholds in shower compartments shall be 1/2 inch (13 mm) high maximum in accordance with 303.

608.8 Shower Enclosures. Enclosures for shower compartments shall not obstruct *operable parts* or obstruct transfer from *wheelchairs* onto shower seats.

609 Grab Bars

609.1 General. Grab bars in *accessible* toilet *facilities* and bathing *facilities* shall comply with 609.

609.2 Size and Spacing of Grab Bars. The diameter of grab bars shall be 1-1/4 inches (32 mm) minimum to 1-1/2 inches (38 mm) maximum. If not round, the shape shall provide equivalent graspability with a maximum cross-section dimension of 2 inches (51 mm) and perimeter dimension of 4 inches (100 mm) minimum and 4-11/16 inches (120 mm) maximum and with edges having a 1/8-inch (3.2 mm) minimum radius. The *space* between the wall and the grab bar shall be 1-1/2 inches (38 mm). The *space* between the grab bar and projecting objects above shall be 15 inches (380 mm) minimum.

Figure 609.2

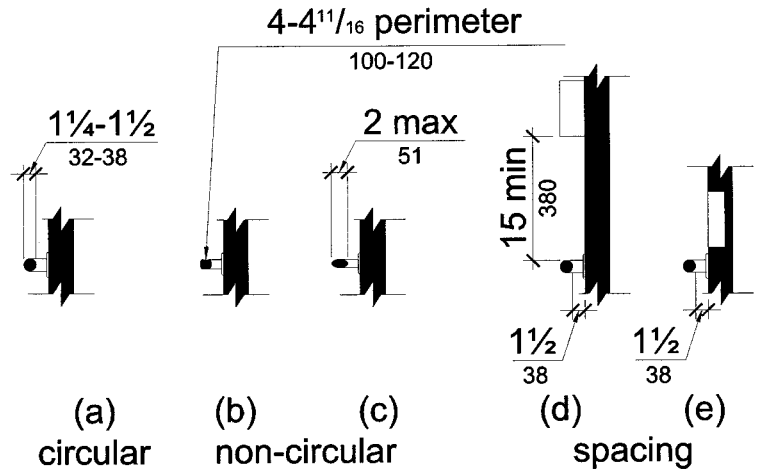

EXCEPTION: The *space* between the grab bars and shower controls, shower fittings, and other grab bars above shall be 1-1/2 inches (38 mm) minimum.

609.3 Position of Grab Bars. Grab bars shall be installed in a horizontal position, 33 inches (840 mm) minimum to 36 inches (915 mm) maximum above the floor, except that at water closets for *children's use* complying with 604.9, grab bars shall be installed in a horizontal position 18 inches (455 mm) minimum to 27 inches (685 mm) maximum above the floor.

Figure 609.3

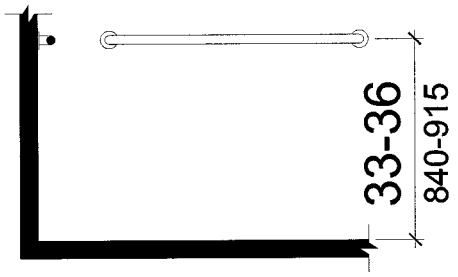

609.4 Surface Hazards. Grab bars and any wall or other surfaces adjacent to grab bars shall be free of sharp or abrasive *elements*. Edges shall have a radius of 1/8 inch (3.2 mm) minimum.

609.5 Fittings. Grab bars shall not rotate within their fittings.

609.6 Installation. Grab bars shall be installed in any manner that provides a gripping surface at the locations specified in this standard and that does not obstruct the required clear floor *space*.

609.7 Structural Strength. Allowable stresses shall not be exceeded for materials used when a vertical or horizontal force of 250 lb (1112 N) is applied at any point on the grab bar, fastener, mounting device, or supporting structure.

610 Seats

610.1 General. Seats in *accessible* bathtubs and shower compartments shall comply with 610.

610.2 Bathtub Seats. The depth of a removable in-tub seat shall be 15 inches (380 mm) minimum to 16 inches (405 mm) maximum. The seat shall be capable of secure placement. The depth of a permanent

seat at the head end of the bathtub shall be 15 inches (380 mm) minimum. The top of bathtub seats shall be 17 inches (430 mm) minimum to 19 inches (485 mm) maximum above the bathroom floor.

Figure 610.2

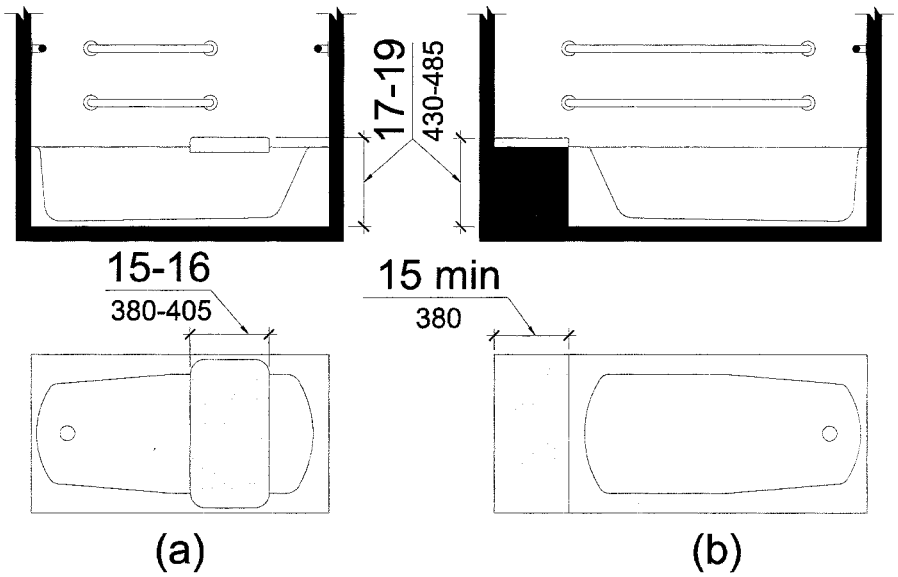

610.3 Shower Compartment Seats. Where a seat is provided in a roll-in shower compartment, it shall be a folding type and shall be installed on the wall adjacent to the controls. Seats shall be L-shaped or rectangular. The top of the seat shall be 17 inches (430 mm) minimum to 19 inches (485 mm) maximum above the bathroom floor. In transfer-type showers, the seat shall extend from the back wall to a point within 3 inches (75 mm) of the compartment entry. In roll-in-type showers, the seat shall be located adjacent to the compartment entry and shall extend from the control wall to a point within 3 inches (75 mm) of the compartment entry.

Figure 610.3

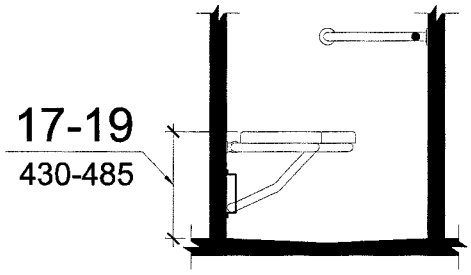

610.3.1 Rectangular Seats. The rear edge of a rectangular seat shall be 2 1/2 inches (64 mm) maximum and the front edge 15 inches (380 mm) minimum to 16 inches (405 mm) maximum from the seat wall. The side edge of the seat shall be 1-1/2 inches (38 mm) maximum from the back wall of a transfer-type shower and 1-1/2 inches (38 mm) maximum from the control wall of a roll-in-type shower.

Figure 610.3.1

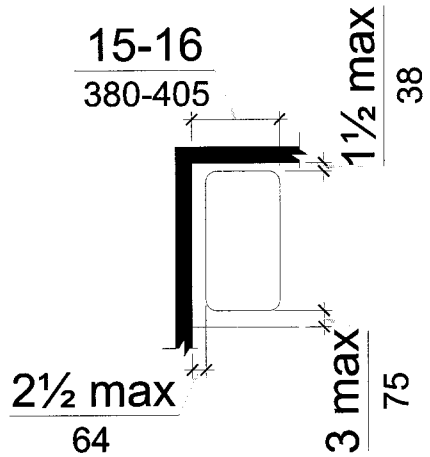

610.3.2 L-shaped Seats. The rear edge of an L-shaped seat shall be 2 1/2 inches (64 mm) maximum and the front edge 15 inches (380 mm) minimum to 16 inches (405 mm) maximum from the seat wall. The rear edge of the "L" portion of the seat shall be 1 1/2 inches (38 mm) maximum from the wall and the front edge shall be 14 inches (355 mm) minimum to 15 inches (380 mm)

maximum from the wall. The end of the "L" shall be 22 inches (560 mm) minimum to 23 inches maximum (585 mm) from the main seat wall.

Figure 610.3.2

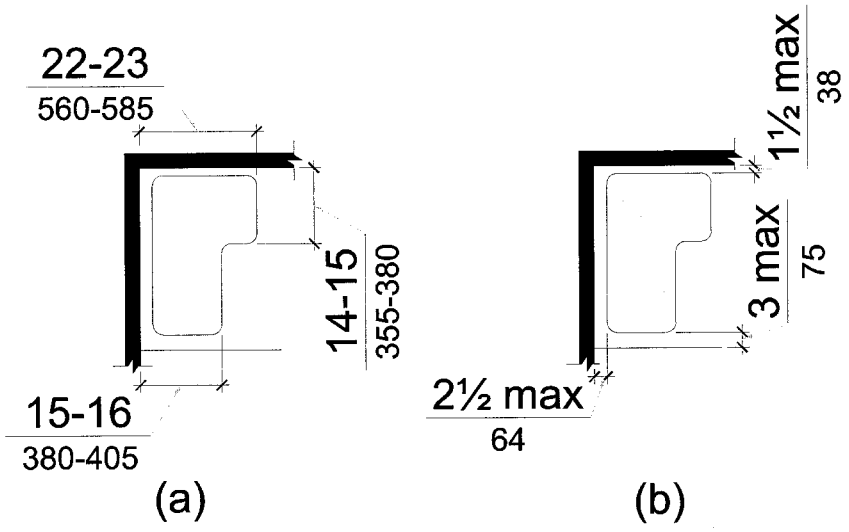

610.4 Structural Strength. Allowable stresses shall not be exceeded for materials used when a vertical or horizontal force of 250 lb (1112 N) is applied at any point on the seat, fastener, mounting device, or supporting structure.

611 Laundry Equipment

611.1 General. Washing machines and clothes dryers required to be *accessible* shall comply with 611.

611.2 Clear Floor Space. A clear floor or ground *space* complying with 305 positioned for parallel approach shall be provided. The clear floor or ground *space* shall be centered on the appliance.

611.3 Operable Parts. *Operable parts* including doors, lint screens, detergent and bleach compartments shall comply with 309.

611.4 Height. Top loading machines shall have the door to the laundry compartment located 34 inches (865 mm) maximum above the floor. Front loading machines shall have the bottom of the opening to the

laundry compartment located 15 inches (380 mm) minimum and 34 inches (865 mm) maximum above the floor.

Figure 611.4

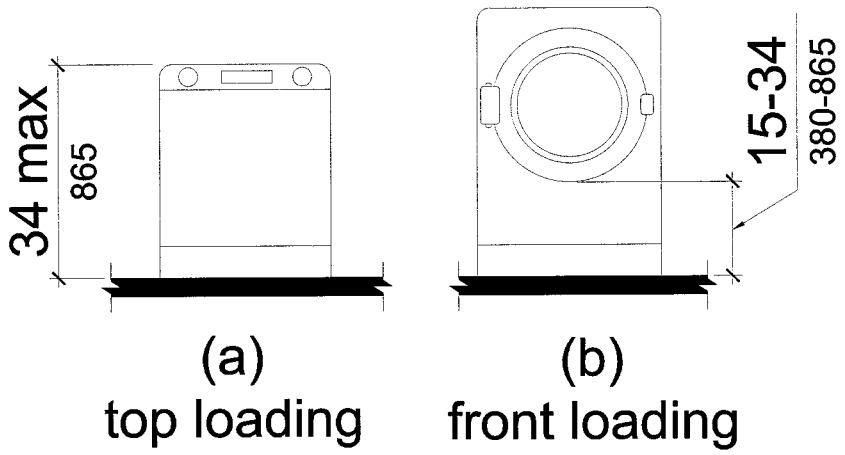

CHAPTER 7: COMMUNICATION ELEMENTS AND FEATURES

701 General

701.1 Scope. Communications features and *elements* required to be *accessible* by Chapter 2 shall comply with the applicable provisions of this chapter.

702 Fire Alarm Systems

702.1 General. Fire alarm systems required to be *accessible* shall have audible alarms complying with 702.2 and visual alarms complying with 702.3.

EXCEPTION: Fire alarm systems in medical care *facilities* shall be permitted to be modified to suit standard health care alarm practice.

702.2 Audible Alarms. Audible alarms shall produce a sound that exceeds the prevailing equivalent sound level in the room or *space* by 15 dBA minimum or exceeds any maximum sound level with a duration of 60 seconds by 5 dBA, whichever is louder. Sound levels for alarm signals shall not exceed 110 dBA.

702.3 Visual Alarms. Visual alarms shall comply with 702.3.

702.3.1 Light Pulse Characteristics.

702.3.1.1 Type. The lamp shall be a xenon strobe type or equivalent.

702.3.1.2 Color. The color shall be clear or nominal white.

702.3.1.3 Flash Rate. The flash rate for an individual appliance shall be 1 Hz minimum and 2 Hz maximum over its rated voltage range.

Advisory 702.3.1.3
Flash rates that exceed five flashes per second may be disturbing to persons with a photosensitivity, particularly those with certain forms of epilepsy. Multiple, unsynchronized visual signals within a single *space* may produce a composite flash rate that could trigger a photoconvulsive response in such persons. Therefore, installations that may produce a composite rate in excess of 5 Hz should be avoided by decreasing the number of fixtures and raising the intensity of lamps they contain, by decreasing the flash rate of multiple lamps, or by synchronizing the flash rates of multiple fixtures.

702.3.1.4 Pulse Duration. The maximum pulse duration shall be two-tenths of one second with a maximum duty cycle of 40 percent. The pulse duration is defined as the time interval between initial and final points of 10 percent of maximum signal.

702.3.2 Dispersion. Light dispersion of wall installed appliances shall comply with Table 702.3.2.1. Light dispersion of ceiling installed appliances shall comply with Table 702.3.2.2.

Table 702.3.2.1 Light Dispersion for Wall-Installed Visual Alarm Appliances

Vertical Dispersion		Horizontal Dispersion	
Degrees from Horizontal	Percent of Rated	Degrees from Vertical	Percent of Rated
0	100	0	100
5 to 30	90	5 to 25	90
35	65	30 to 45	75
40	46	50	55
45	34	55	45
50	27	60	40
55	22	65	35
60	18	70	35
65	16	75	30
70	15	80	30
75	13	85	25
80	12	90	25
85	12		
90	12		

Table 702.3.2.2 Light Dispersion for Ceiling-Installed Visual Alarm Appliances

Degrees from Vertical	Percent of Rated
0	100
5 to 25	90
30 to 45	75

Table 702.3.2.2 Light Dispersion for Ceiling-Installed Visual Alarm Appliances

Degrees from Vertical	Percent of Rated
50	55
55	45
60	40
65	35
70	35
75	30
80	30
85	25
90	25

702.3.3 Location. Appliances shall be located in accordance with 702.3.3.1 or 702.3.3.2.

EXCEPTION: Appliances in guest rooms shall comply with 702.3.6.

702.3.3.1 Wall Installed Appliances. Appliances shall be located 80 inches (2030 mm) minimum and 96 inches (2440 mm) maximum above the finished floor or ground measured to the bottom of the appliance.

Figure 702.3.3.1

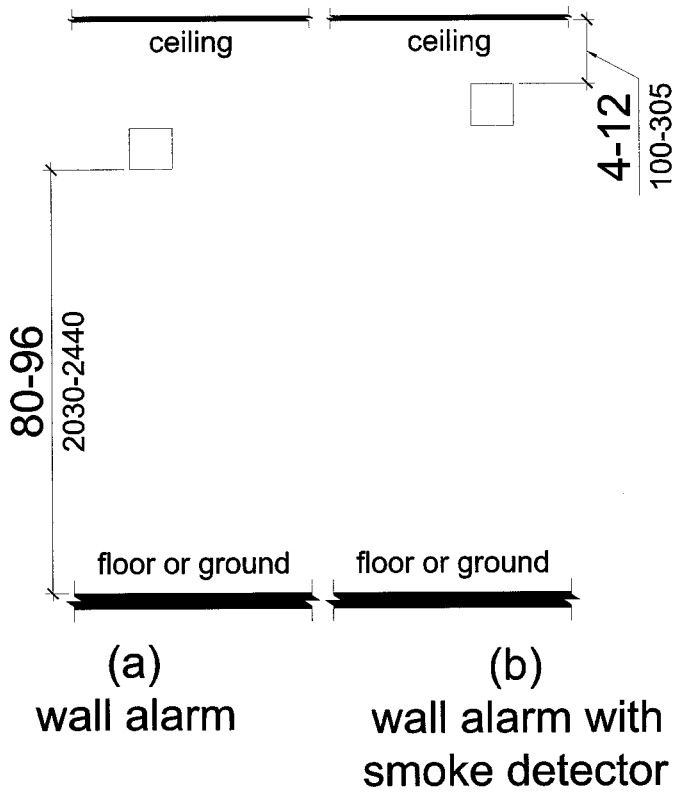

EXCEPTION: Wall installed appliances which are part of a smoke detector shall be located 4 inches (100 mm) minimum and 12 inches (305 mm) maximum below the ceiling measured to the top of the smoke detector.

702.3.3.2 Ceiling-Installed Appliances. Appliances shall be on the ceiling. Where ceiling height exceeds 30 feet (9140 mm), appliances shall be suspended from the ceiling to a height of 30 feet (9140 mm) maximum above the finished floor or ground.

Figure 702.3.3.2

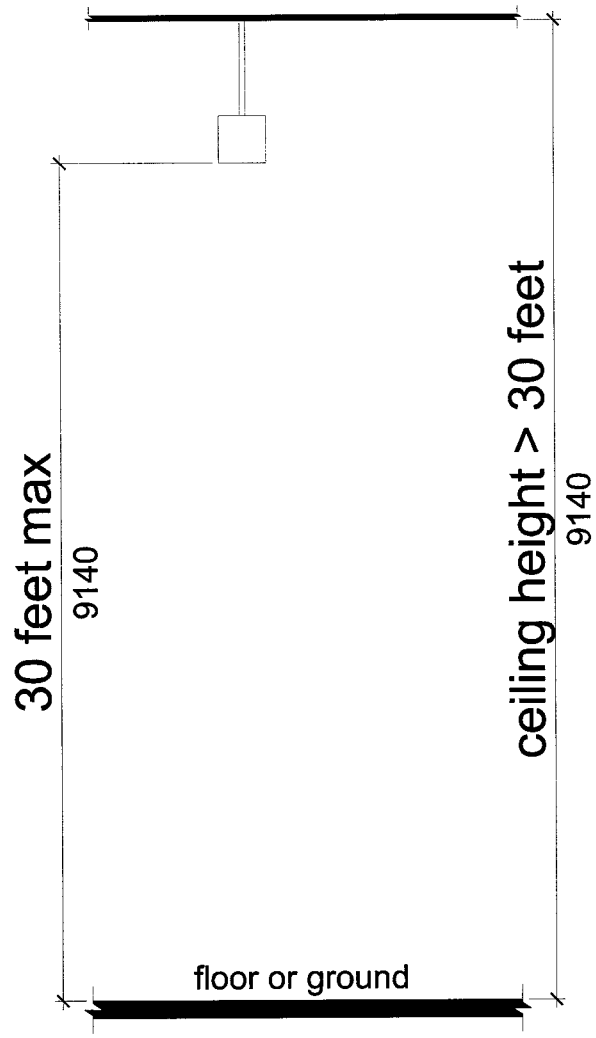

702.3.4 Spacing Allocation and Minimum Intensity. Spacing and minimum effective intensity for appliances shall comply with 702.3.4.

EXCEPTIONS: 1. Appliances in corridors not more than 20 feet (6100 mm) in width shall comply with 702.3.5.
2. Appliances in guest rooms shall comply with 702.3.6.

702.3.4.1 General. The signal provided by the appliance or appliances shall be visible either by direct view or by reflection from all parts of the covered area. Multiple appliances within an area are permitted only where size, shape, *building* construction or furnishings prohibit total coverage by a single appliance. Where multiple appliances are provided in a single area to provide total area coverage, the appliances shall comply with one of the following: a maximum of two appliances located on opposite walls; the appliances shall have synchronized flashes; or, in rooms 80 feet (24 m) by 80 feet (24 m) or greater in size, more than two appliances located such that all appliances in any 135-degree field of view are spaced a minimum of 55 feet (17 m) from each other.

702.3.4.2 Wall Installed Appliances. Spacing and minimum effective intensity for wall installed appliances shall be in accordance with Table 702.3.4.2 provided the appliance is located at the midpoint of the longest side of the area served. Where the appliance is not located at the midpoint, the minimum effective intensity shall be based on a maximum area of coverage equal to the distance to the opposite side of the area served or double the distance to the farthest adjacent side of the area served, whichever is greater.

Table 702.3.4.2 Spacing Allocation for Wall-Installed Visual Alarm Appliances

Maximum Area of Coverage in Feet	Minimum Required Light Output (Effective Intensity) (candela)		
	One Light per Area	Two Lights per Area	Four Lights per Area
20 X 20 (6100 X 6100 mm)	15	Not Permitted	Not Permitted
30 X 30 (9140 X 9140 mm)	30	15	Not Permitted
40 X 40 (12 X 12 m)	60	30	Not Permitted
50 X 50 (15 X 15 m)	95	60	Not Permitted
60 X 60 (18 X 18 m)	135	95	Not Permitted
70 X 70 (21 X 21 m)	185	95	Not Permitted
80 X 80 (24 X 24 m)	240	135	60
90 X 90 (27 X 27 m)	305	185	95

Table 702.3.4.2 Spacing Allocation for Wall-Installed Visual Alarm Appliances

Maximum Area of Coverage in Feet	Minimum Required Light Output (Effective Intensity) (candela)		
	One Light per Area	Two Lights per Area	Four Lights per Area
100 X 100 (30 X 30 m)	375	240	95
110 X 110 (34 X 34 m)	455	240	135
120 X 120 (37 X 37 m)	540	305	135
130 X 130 (40 X 40 m)	635	375	185

702.3.4.3 Ceiling Installed Appliances. Spacing and minimum effective intensity for ceiling installed appliances shall be in accordance with Table 702.3.4.3 provided the appliance is located at the centerpoint of the area served. Where the appliance is not located at the centerpoint, the minimum effective intensity shall be based on a maximum area of coverage equal to two times the distance from the appliance to the farthest side of the area served.

Table 702.3.4.3 Spacing Allocation for Ceiling-Installed Visual Alarm Appliances

Maximum Area of Coverage in Feet	Minimum Required Light Output (Effective Intensity) (candela)	
	Maximum Ceiling Height in Feet	One Light
20 X 20 (6100 X 6100 mm)	10 (3050 mm)	15
30 X 30 (9140 X 9140 mm)	10 (3050 mm)	30
40 X 40 (12 X 12 m)	10 (3050 mm)	60
50 X 50 (15 X 15 m)	10 (3050 mm)	95
20 X 20 (6100 X 6100 mm)	20 (6100 mm)	30
30 X 30 (9140 X 9140 mm)	20 (6100 mm)	45
40 X 40 (12 X 12 m)	20 (6100 mm)	80
50 X 50 (15 X 15 m)	20 (6100 mm)	115
20 X 20 (6100 X 6100 mm)	30 (9140 mm)	55
30 X 30 (9140 X 9140 mm)	30 (9140 mm)	75

Table 702.3.4.3 Spacing Allocation for Ceiling-Installed Visual Alarm Appliances

Maximum Area of Coverage in Feet	Minimum Required Light Output (Effective Intensity) (candela)	
	Maximum Ceiling Height in Feet	One Light
40 X 40 (12 X 12 m)	30 (9140 mm)	115
50 X 50 (15 X 15 m)	30 (9140 mm)	150

702.3.5 Corridor Spacing Allocation and Minimum Intensity. Appliances in corridors that are 20 feet (6100 mm) maximum in width shall comply with 702.3.5. Corridors exceeding 20 feet (6100 mm) in width shall comply with 702.3.4.

Figure 702.3.5

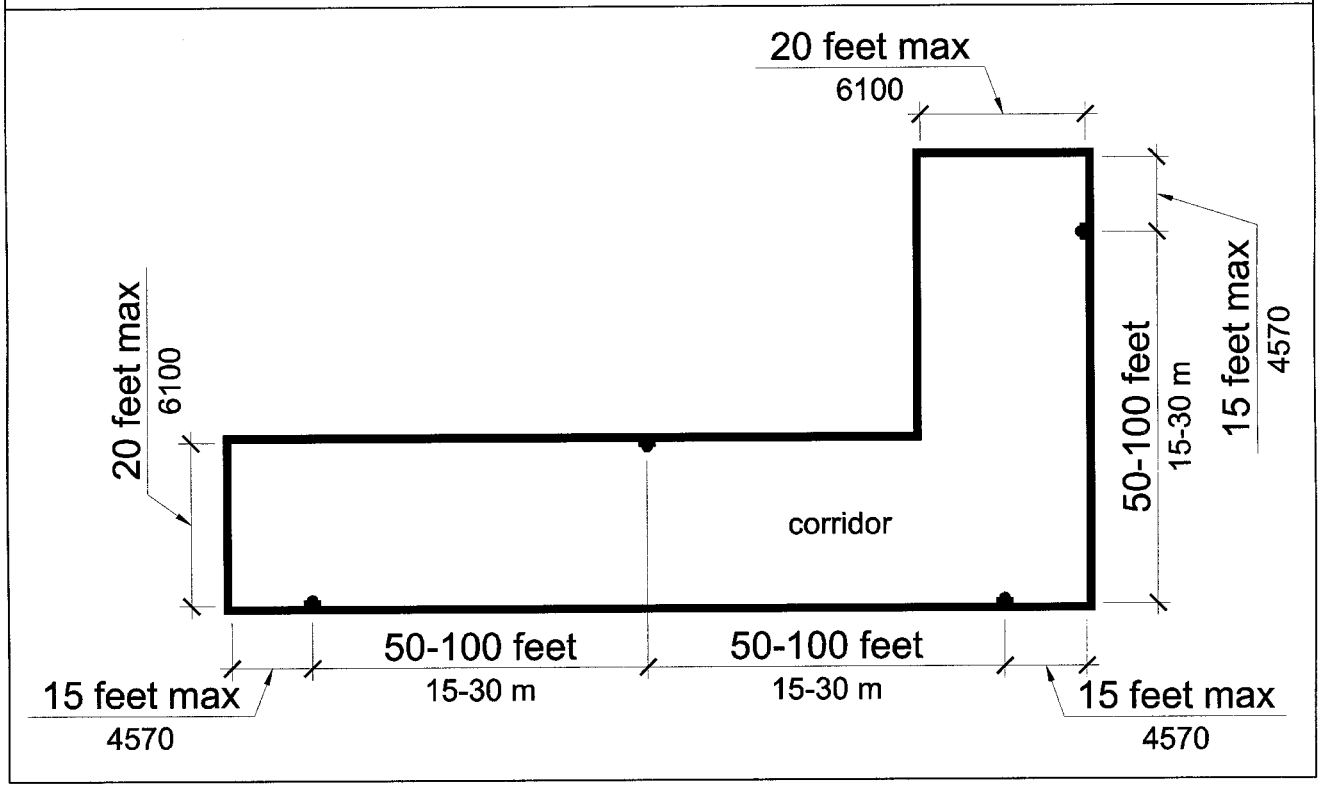

702.3.5.1 Appliance Spacing. Appliances shall be located 15 feet (4570 mm) maximum from each end of the corridor and shall be located 50 feet (15 m) minimum and 100 feet (30 m) maximum apart along the corridor. Interruptions to the concentrated viewing path by doors, elevation changes or other obstructions shall constitute the end of a corridor for purposes of this section.

702.3.5.2 Minimum Effective Intensity. Appliances shall have a minimum effective intensity of 15 candela.

702.3.6 Guest Rooms. Guest rooms required to have visual alarms shall comply with 702.3.6.

702.3.6.1 Activation. Where single or multiple-station smoke detectors are provided in the sleeping room or suite, a visual alarm that is activated upon activation of the smoke detectors shall be provided within the room or suite. Where a *building* fire alarm system is provided, a visual alarm that is activated upon activation of the *building* fire alarm system shall be provided within the room or suite. The signaling line or channel between the activating device of the appliance and the *building* fire alarm system shall be monitored for integrity by the *building* fire alarm system. Where the same appliance is used for visual notification of smoke detector and fire alarm system activation, activation of the room or suite smoke detectors shall not activate the *building* fire alarm system.

702.3.6.2 Location. In sleeping rooms or suites, appliances shall be permanently installed at a location where alarm signals shall be visible, directly or by reflection, in all parts of the room or suite. In sleeping rooms the appliance shall be located 16 feet (4880 mm) maximum from the

head end of the bed location, measured horizontally. Where a suite contains more than one sleeping room, an appliance shall be provided in each sleeping room.

Figure 702.3.6.2

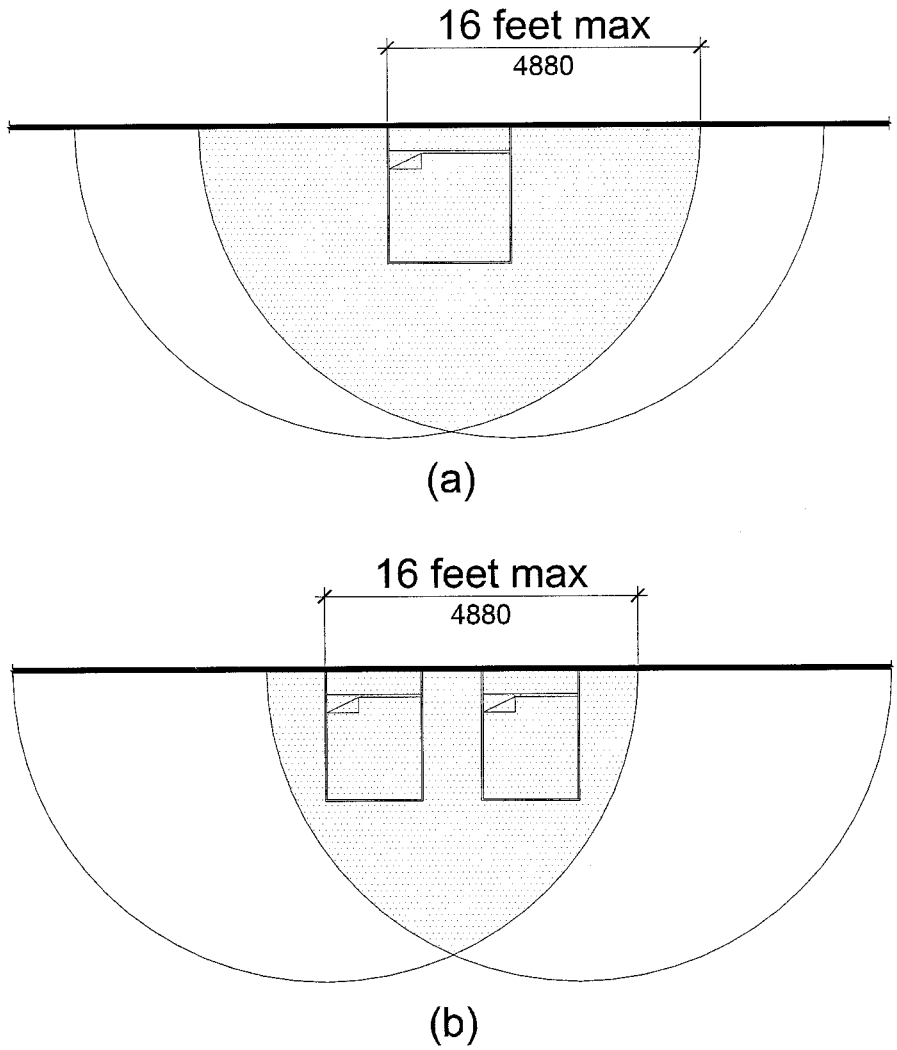

702.3.6.3 Minimum Effective Intensity and Mounting Height. Wall installed appliances located 24 inches (610 mm) minimum below the ceiling shall have a minimum effective intensity of 110 candela. Ceiling installed appliances and wall installed appliances located less than 24 inches (610 mm) below the ceiling shall have a minimum effective intensity of 177 candela.

703 Signs

703.1 General. *Signs* required to be *accessible* shall comply with 703.

703.2 Characters that are Both Tactile and Visual. *Characters* required to be *tactile* shall comply with 703.2. *Tactile characters* shall be duplicated in Braille complying with 703.5.

EXCEPTION: *Tactile characters* shall be permitted to comply with 703.3, where separate visual *characters* complying with 703.4 provide the same information.

703.2.1 Finish and Contrast. *Characters* and their background shall have a non-glare finish. *Characters* shall contrast with their background with either light *characters* on a dark background or dark *characters* on a light background.

703.2.2 Tactile Characters. *Tactile characters* shall be raised 1/32 inch (0.8 mm) minimum above their background. Raised borders and decorative *elements* that are not required shall be separated 3/8 inch (9.5 mm) minimum from *tactile characters*.

703.2.3 Character Forms. Fonts shall have *characters* complying with 703.2.3.

703.2.3.1 Case. *Characters* shall be uppercase.

703.2.3.2 Style. *Characters* shall be sans serif. *Characters* shall not be italic, oblique, script, highly decorative, or of other unusual forms.

703.2.3.3 Width. *Character* width shall be 55 percent minimum and 110 percent maximum the height of the *character* with the width based on the uppercase letter "O" and the height based on the uppercase letter "I".

703.2.3.4 Height. *Character* height measured vertically from the baseline of the *character* shall be 5/8 inch (16 mm) minimum and 2 inches (51 mm) maximum based on the uppercase letter "I".

Figure 703.2.3.4

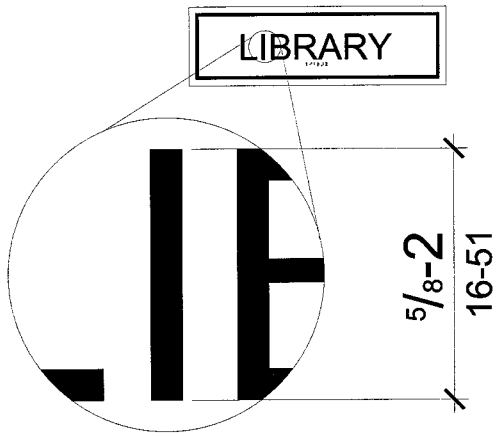

703.2.3.5 Stroke Thickness. For *characters* with rectangular cross sections, the stroke thickness of the uppercase letter "I" shall be 10 percent minimum and 15 percent maximum of the height of the *character.* For *characters* with other cross sections, the stroke thickness of the uppercase letter "I" shall be 10 percent minimum and 30 percent maximum of the height of the *character* measured at the base of the cross section. Stroke thickness at the top of the cross section shall be 15 percent maximum of the height of the *character.*

703.2.4 Character Spacing. *Character* spacing shall be measured between the two closest points of adjacent *characters* within a message, excluding word *spaces.* Where *characters* have rectangular cross sections, spacing between individual *characters* shall be 1/8 inch (3 mm) minimum to 3/8 inch (10 mm) maximum. Where *characters* have other cross sections, spacing between individual *characters* shall be 1/16 inch (2 mm) minimum to 3/8 inch (10 mm) maximum at the base of the cross sections and 1/8 inch (3 mm) to 3/8 inch (10 mm) maximum at the top of the cross sections.

703.2.5 Line Spacing. Spacing between the baselines of separate lines of *characters* in a sentence or paragraph shall be 135 percent minimum and 170 percent maximum of the *character* height.

703.2.6 Mounting Height. *Characters* shall be located 48 inches (1220 mm) minimum and 60 inches (1525 mm) maximum above the adjacent floor or ground surface measured from the baseline of the *characters*.

Figure 703.2.6

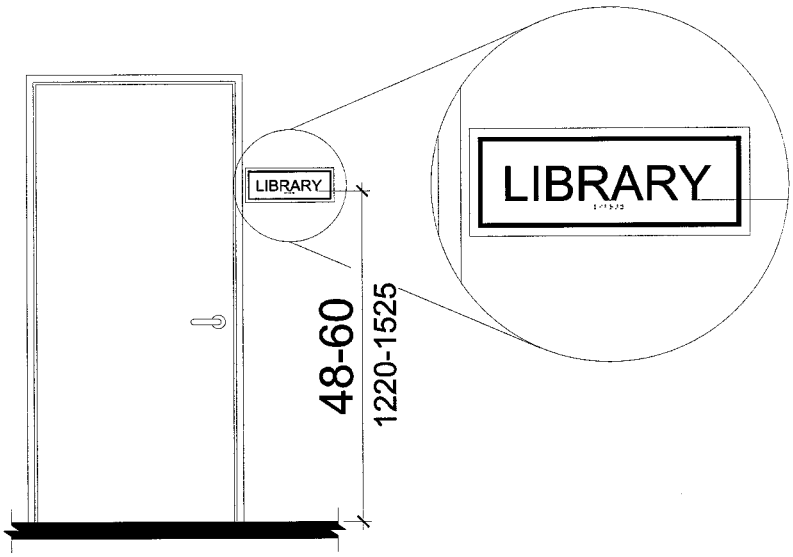

EXCEPTION: This requirement shall not apply to elevator car controls.

703.2.7 Mounting Location. Where a *sign* containing *tactile characters* is provided at a door, the *sign* shall be located alongside the door at the latch side. Where a *tactile sign* is provided at double doors, the *sign* shall be located to the right of the right hand door. Where there is no wall *space* at the latch side of a single door or to the right side of double doors, *signs* shall be located on the nearest adjacent wall. *Signs* containing *tactile characters* shall be located so that a clear floor *space*

of 18 inches (455 mm) minimum by 18 inches (455 mm) minimum, centered on the *sign*, is provided beyond the arc of any door swing between the closed position and 45 degree open position.

Figure 703.2.7

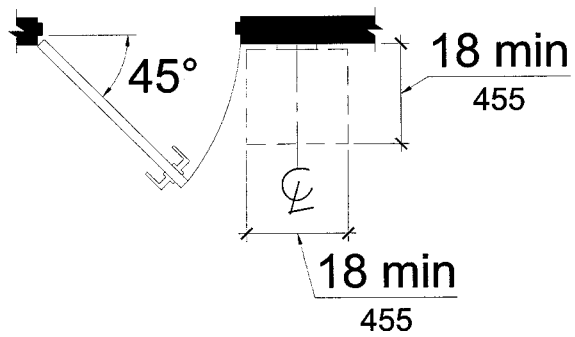

EXCEPTION: *Signs* shall be permitted on the push side of doors with closers and without hold-open devices.

703.3 Tactile Characters. Where *tactile characters* are required and separate *tactile* and visual *characters* with the same information are provided, *tactile characters* shall comply with 703.3 and visual *characters* shall comply with 703.4. *Tactile characters* shall be duplicated in Braille complying with 703.5.

703.3.1 Tactile Characters. *Tactile characters* shall be raised 1/32 inch (0.8 mm) minimum above their background. Raised borders and decorative *elements* that are not required shall be separated 3/8 inch (9.5 mm) minimum from *tactile characters*.

703.3.2 Character Forms. Fonts shall have *characters* complying with 703.3.2.

703.3.2.1 Case. *Characters* shall be uppercase.

703.3.2.2 Style. *Characters* shall be sans serif. *Characters* shall not be italic, oblique, script, highly decorative, or of other unusual forms.

703.3.2.3 Width. *Character* width shall be 55 percent minimum and 110 percent maximum the height of the *character* with the width based on the uppercase letter "O" and the height based on the uppercase letter "I".

703.3.2.4 Height. *Character* height measured vertically from the baseline of the *character* shall be 1/2 inch (13 mm) minimum and 3/4 inch (19 mm) maximum based on the height of the uppercase letter "I".

703.3.2.5 Stroke Thickness. Stroke thickness of the uppercase letter "I" shall be 15 percent maximum of the height of the *character*.

703.3.3 Character Spacing. *Character* spacing shall be measured between the two closest points of adjacent *character* within a message, excluding word *spaces*. Spacing between individual *characters* shall be 1/8 inch (3 mm) minimum to 1/4 inch (6 mm) maximum.

703.3.4 Line Spacing. Spacing between the baselines of separate lines of *characters* within a message shall be 135 percent minimum and 170 percent maximum of the *character* height.

703.3.5 Mounting Height. *Characters* shall be located 48 inches (1220 mm) minimum and 60 inches (1525 mm) maximum above the adjacent floor or ground surface, measured from the baseline of the *characters*.

EXCEPTION: This requirement shall not apply to elevator car controls.

703.3.6 Mounting Location. Where a *tactile sign* is provided at a door, the *sign* shall be located alongside the door at the latch side. Where a *tactile sign* is provided at double doors, the *sign* shall be located to the right of the right hand door. Where there is no wall *space* at the latch side of a single door or to the right side of double doors, *signs* shall be located on the nearest adjacent wall. *Signs* containing *tactile characters* shall be located so that a clear floor *space* of 18 inches (455 mm) by 18 inches (455 mm) minimum, centered on the *sign*, is provided beyond the arc of any door swing between the closed position and 45 degree open position.

EXCEPTION: *Signs* shall be permitted on the push side of doors with closers and without hold-open devices.

703.4 Visual Characters. Visual *characters* required to be *accessible* shall comply with 703.4.

703.4.1 Finish and Contrast. *Characters* and their background shall have a non-glare finish. *Characters* shall contrast with their background with either light *characters* on a dark background or dark *characters* on a light background.

Advisory 703.4.1
Signs are more legible for persons with low vision when *characters* contrast with their background by approximately 70 percent. Contrast in percent can be determined by: contrast =[(B1-B2)/B1] x 100 where B1=light reflectance value (LRV) of the lighter area and B2=light reflectance value (LRV) of the darker area. Note: in any application both white and black are never absolute; thus B1 never equals 100 and B2 is always greater than zero.

703.4.2 Character Forms. Fonts shall have *characters* complying with 703.4.2.

703.4.2.1 Case. *Characters* shall be uppercase or lowercase or a combination of both.

703.4.2.2 Style. *Characters* shall be conventional in form. *Characters* shall not be italic, oblique, script, highly decorative, or of other unusual forms.

703.4.2.3 Width. *Character* width shall be 55 percent minimum and 110 percent maximum the height of the *character* with the width based on the uppercase letter "O" and the height based on the uppercase letter "I".

703.4.2.4 Height. Minimum *character* height measured from the baseline of the *character* shall comply with Table 703.4.2.4 based on the height of the *characters* above the finished floor of the viewing location and the minimum viewing distance. *Character* height shall be based on the uppercase letter "I". Minimum viewing distance shall be measured as the horizontal distance where an obstruction prevents further approach towards the *sign*.

Table 703.4.2.4 Visual Character Dimensions

Height of Floor to Baseline of Character	Minimum Viewing Distance	Minimum Character Height
less than 40 inches (100 mm)[1]		
40 inches (100 mm) to less than or equal to 70 inches (1780 mm)	less than 6 feet (1830 mm)	5/8 inch (16 mm)
	6 feet (1830 mm) and greater	5/8 inch (16 mm), plus 1/8 inch (3.2 mm) per foot (305 mm) of viewing distance above 6 feet (1830 mm)
70 inches (1780 mm) to less than or equal to 120 inches (3050 mm)	less than 15 feet (4570 mm)	2 inches (51 mm)
	15 feet (4570 mm) and greater	2 inches (51 mm), plus 1/8 inch (3.2 mm) per foot (305 mm) of viewing distance above 15 feet (4570 mm)
greater than 120 inches (3050 mm)	less than 21 feet (6400 mm)	3 inches (75 mm)
	21 feet (6400 mm) and greater	3 inches (75 mm), plus 1/8 inch (3.2 mm) per foot (305 mm) of viewing distance above 21 feet (6400 mm)

1. not permitted except in elevators

703.4.2.5 Stroke Thickness. Stroke thickness of the uppercase letter "I" shall be 10 percent minimum and 30 percent maximum of the height of the *character*.

703.4.3 Character Spacing. *Character* spacing shall be measured between the two closest points of adjacent *characters*, excluding word *spaces*. Spacing between individual *characters* shall be 10 percent minimum and 35 percent maximum of *character* height.

703.4.4 Line Spacing. Spacing between the baselines of separate lines of *characters* shall be 135 percent minimum and 170 percent maximum of the *character* height.

703.4.5 Mounting Height. Visual *characters* shall be located 40 inches (1015 mm) minimum above the floor of the viewing position. Mounting heights shall comply with Table 703.4.2.4 based on the size of the *characters* on the *sign*.

703.5 Braille. *Tactile characters* shall be accompanied by Grade II Braille complying with Table 703.5 and 703.5. Braille dots shall have a domed or rounded shape.

Table 703.5 Braille Dimensions

Measurement Range	Minimum in Inches	Maximum in Inches
Dot base diameter	0.059 (1.5 mm)	0.063 (1.6 mm)
Distance between two dots in the same cell[1]	0.090 (2.3 mm)	0.100 (2.5 mm)
Distance between corresponding dots in adjacent cells[1]	0.241 (6.1 mm)	0.300 (7.6 mm)
Dot height	0.025 (0.6 mm)	0.037 (0.9 mm)
Distance between corresponding dots from one cell directly below[1]	0.395 (10 mm)	0.400 (10.2 mm)

1. measured center to center

703.5.1 Location. Braille shall be located below the corresponding text. If text is multi-lined, Braille shall be placed below the entire text. Braille shall be separated 1/4 inch (6.4 mm) minimum from any other *tactile characters*.

EXCEPTION: Braille provided on elevator car controls shall be separated 3/16 inch (4.8 mm) minimum and shall be located either directly below or adjacent to the corresponding *tactile characters* or symbols.

703.5.2 Raised Borders and Decorative Elements. Raised borders and decorative *elements* that are not required, shall be separated 3/8 inch (9.5 mm) minimum from Braille.

703.5.3 Height. Braille shall be located 40 inches (1015 mm) minimum and 60 inches (1525 mm) maximum above the floor measured from the baseline of the Braille cells.

Figure 703.5.3

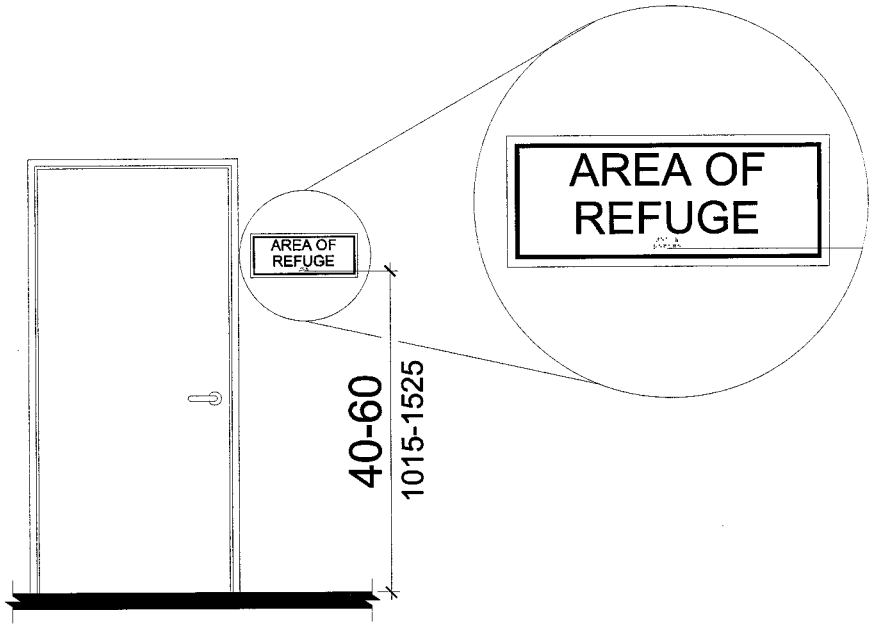

EXCEPTION: This requirement shall not apply to elevator car controls.

703.6 Pictograms. Where *pictograms* are required to be *accessible*, they shall comply with 703.6.

703.6.1 Pictogram Field. *Pictograms* shall have a field height of 6 inches (150 mm) minimum. *Characters* or Braille shall not be located in the *pictogram* field.

Figure 703.6.1

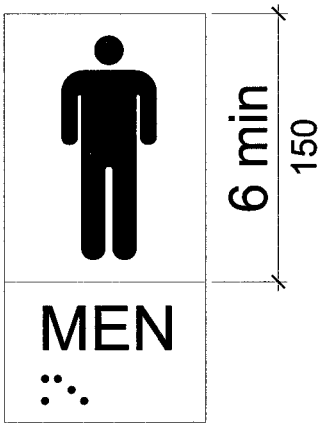

703.6.2 Finish and Contrast. *Pictograms* and their field shall have a non-glare finish. *Pictograms* shall contrast with their field with either a light *pictogram* on a dark field or a dark *pictogram* on a light field.

703.6.3 Text Descriptors. Where text descriptors for *pictograms* are required, they shall located directly below or adjacent to the *pictogram* and shall comply with 703.2.

703.7 Symbols of Accessibility. Where symbols of accessibility are required, they shall comply with 703.7.

703.7.1 Finish and Contrast. Symbols of accessibility and their background shall have a non-glare finish. Symbols of accessibility shall contrast with their background with either a light symbol on a dark background or a dark symbol on a light background.

703.7.2 Symbols.

703.7.2.1 International Symbol of Accessibility. Where the International Symbol of Accessibility is required, it shall comply with Figure 703.7.2.1.

Figure 703.7.2.1

703.7.2.2 International Symbol of TTY. Where the International Symbol of *TTY* is required, it shall comply with Figure 703.7.2.2.

Figure 703.7.2.2

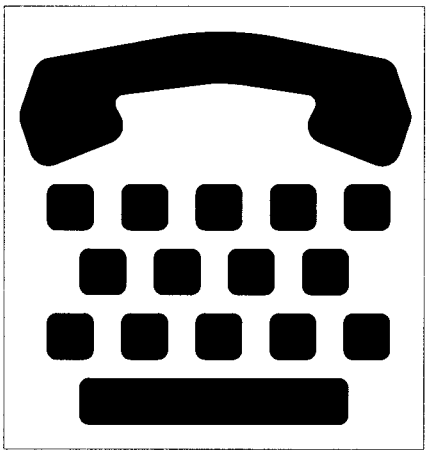

703.7.2.3 Volume Controlled Telephones. Telephones required to have a volume control shall be identified by a *sign* containing a *pictogram* of a telephone handset with radiating sound waves on a square field such as shown in Figure 703.7.2.3.

Figure 703.7.2.3

703.7.2.4 Assistive Listening Systems. Where assistive listening systems are required to be identified by the International Symbol of Access for Hearing Loss, it shall comply with Figure 703.7.2.4.

Figure 703.7.2.4

704 Telephones

704.1 General. Public telephones required to be *accessible* shall comply with 704.

704.2 Wheelchair Accessible Telephones. Public telephones required to be *wheelchair accessible* shall comply with 704.2.

704.2.1 Clear Floor or Ground Space. A clear floor or ground *space* complying with 305 shall be provided. The clear floor or ground *space* shall not be restricted by bases, enclosures or seats.

Figure 704.2.1

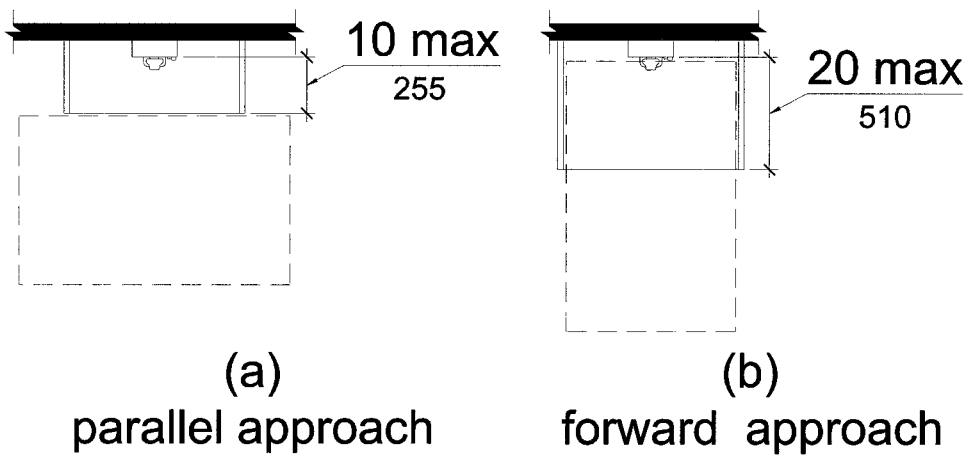

704.2.1.1 Parallel Approach. Where a parallel approach is provided, the distance from the edge of the telephone enclosure to the face of the telephone unit shall be 10 inches (255 mm) maximum.

704.2.1.2 Forward Approach. Where a forward approach is provided, the distance from the front edge of a counter within the telephone enclosure to the face of the telephone unit shall be 20 inches (510 mm) maximum.

704.2.2 Operable Parts. *Operable parts* shall comply with 309. Telephones shall have push-button controls where service for such equipment is available.

704.2.3 Protruding Objects. Telephones, enclosures and related equipment shall comply with 307.

704.2.4 Telephone Directories. Telephone directories, where provided, shall be located in accordance with 309.

704.2.5 Cord Length. The cord from the telephone to the handset shall be 29 inches (735 mm) long minimum.

704.3 Volume Control Telephones. Public telephones required to have volume controls shall be equipped with a receive volume control that provides a gain adjustable up to a minimum of 20 dB. For incremental volume control, provide at least one intermediate step of 12 dB of gain. An automatic reset shall be provided.

Advisory 704.3
Amplifiers on pay phones are located in either the base or the handset and are built into the telephone. Most are located in the base and are operated by pressing a button or key. If the microphone in the handset is not being used, a mute button that temporarily turns it off also reduces the amount of background noise which the person hears in the earpiece. If a volume adjustment is provided that allows the user to set the level anywhere from zero to the upper requirement of 20 dB, there is no need to specify a lower limit. If a stepped volume control is provided, one of the intermediate levels must provide 12 dB of gain. Consider compatibility issues when matching an amplified handset with a phone or phone system. Amplified handsets that can be switched with pay telephone handsets are available. Portable and in-line amplifiers can be used with some phones but are not practical at most public phones covered by this document.

704.4 TTYs. *TTYs* required at a public pay telephone shall be permanently affixed within or adjacent to the telephone enclosure. Where an acoustic coupler is used, the telephone cord shall be sufficiently long to allow connection of the *TTY* and the telephone receiver. *Operable parts* of *TTYs* and the telephones they serve shall comply with 309.

Advisory 704.4
Designers are encouraged to ensure that sufficient electrical service is available where *TTYs* are to be installed.

704.4.1 Clearances. Clear floor *space* positioned for a forward approach shall be provided. Knee and toe clearance complying with 306 shall be provided below the *TTY*. When in use, the touch surface of *TTY* keypads shall be 30 inches (760 mm) minimum and 34 inches (865 mm) maximum above the finish floor.

EXCEPTION: In assembly occupancies, 50 percent plus or minus one *TTY*, shall not be required to comply with 704.4.1 provided that the *TTY* has a seat.

Advisory 704.1.1 Exception
Facilities covered by this section may include, but are not limited to, airports and other passenger terminals or stations, courts, art galleries and convention centers.

704.5 TTY Shelf. Public pay telephones required to accommodate portable *TTYs* shall be equipped with a shelf and an electrical outlet within or adjacent to the telephone enclosure. The telephone handset shall be capable of being placed flush on the surface of the shelf. The shelf shall be capable of

accommodating a *TTY* and shall have 6-inch (150 mm) minimum vertical clearance in the area where the *TTY* is to be placed.

705 Detectable Warnings

705.1 General. *Detectable warnings* required on platform edges shall comply with 705.2, 705.3 or 705.4.

705.2 Truncated Domes. A 24-inch (610 mm) wide truncated dome surface complying with 705.2 shall be provided on the walking surface at the platform edge.

Figure 705.2

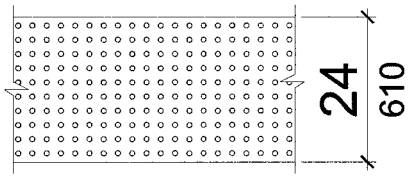

705.2.1 Dome Size. Domes shall have a diameter of 0.9 inch (23 mm), a height of 0.2 inch (5 mm) and a center-to-center spacing of 2.35 inches (60 mm).

Figure 705.2.1

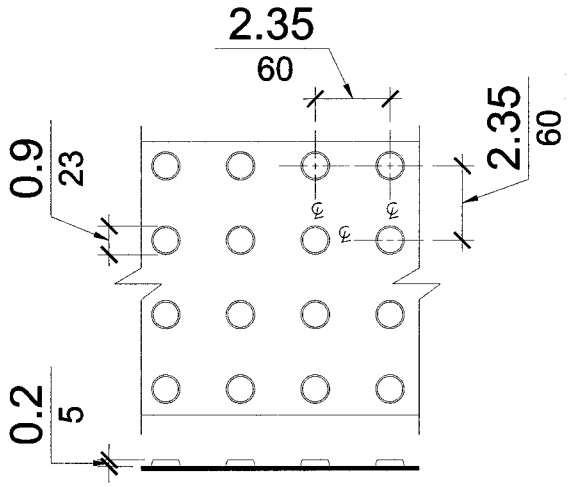

705.2.2 Contrast. The truncated dome surface shall contrast visually with adjoining walking surfaces either light-on-dark, or dark-on-light. The material used to provide contrast shall be an integral part of the truncated dome surface.

705.2.3 Interior Locations. *Detectable warnings* in interior locations shall differ from adjoining walking surfaces in resiliency or sound-on-cane contact.

705.3 Equivalent Tactile Surface. A 24 inch (610 mm) wide *tactile* surface shall be provided on the walking surface at the platform edge. The *tactile* surface shall provide equivalent detectability underfoot to that provided by 705.2.1 and shall provide contrast in accordance with 705.2.2.

705.4 Equivalent Detectability. Equivalent detectability of the platform edge by other construction, technology, or means that will ensure equivalent or superior and reliable communication of the impending change to pedestrians who are blind or visually impaired shall be permitted. The information to be communicated must include 24 inches (610 mm) of advance warning of the platform edge and the precise orientation of the platform edge in relation to the pedestrian.

706 Assistive Listening Systems

706.1 General. Assistive listening systems required in *assembly areas* shall comply with 706.

706.2 Types of Listening Systems. Induction loops, infrared systems, FM and AM radio frequency systems, hard-wired earphones, and other equivalent devices shall be permitted as acceptable assistive listening systems.

Advisory 706.2
Assistive listening systems are generally categorized by their mode of transmission. There are hard-wired systems and three types of wireless systems: induction loop, infrared, and FM radio transmission. Each has different advantages and disadvantages that can help determine which system is best for a given application. For example, an FM system, which is broadcast to an entire area, may be better than an infrared system, which is directional in transmission, in some open-air assemblies since infrared signals can be overpowered by the sun or by movement of people. On the other hand, an infrared system is typically a better choice than an FM system where confidential transmission is important because it is directional.

706.3 Receiver Jacks. Receivers required for use with an assistive listening system shall include a 1/8-inch (3 mm) standard mono jack. Where other jack types are used, adapters shall be provided to comply with this provision.

Advisory 706.3
Earphone jacks with variable volume controls benefit only people who have slight hearing loss and do not help people who use hearing aids.

706.4 Receiver Hearing-Aid Compatibility. Receivers required to be hearing-aid compatible shall interface with T-coils in hearing aids through the provision of neck loops.

Advisory 706.4
Neckloops and headsets that can be worn as neckloops are compatible with hearing aids. Receivers that are not compatible include earbuds, which may require removal of hearing aids, silhouette transducers, earphones, and headsets that must be worn over the ear, which can create disruptive interference in the transmission and can be uncomfortable for people wearing hearing aids.

707 Automatic Teller Machines and Fare Machines

707.1 General. Automatic teller machines and fare machines required to be *accessible* shall comply with 707.

Advisory 707.1
If farecards have one tactually distinctive corner they may be inserted with greater ease. Token collection devices that are designed to accommodate tokens which are perforated can allow a person to distinguish more readily between tokens and common coins. Place *accessible* gates and fare vending machines in close proximity to other *accessible elements* when feasible so the *facility* is easier to use.

707.2 Clear Floor or Ground Space. A clear floor or ground *space* complying with 305 shall be provided.

EXCEPTION: Clear floor or ground *space* is not required at drive-up only automatic teller machines.

707.3 Operable Parts. *Operable parts* shall comply with 309. Each *operable part* shall be able to be differentiated by sound or touch without activation.

EXCEPTION: Drive-up only automatic teller machines shall not be required to comply with 309.2 and 309.3.

707.4 Input. Input devices shall comply with 707.4.

707.4.1 Privacy. The opportunity for the same degree of privacy of input shall be available to all individuals utilizing the equipment.

707.4.2 Key Surfaces. All keys used to operate a machine shall be tactually discernible. Key surfaces shall be raised above the surrounding surface by 1/25 inch (1 mm) minimum. The outer edge of key surfaces shall have a radius of 1/50 inch (0.5 mm) maximum.

EXCEPTION: The touch areas of video display screens shall not be required to be tactually discernible.

707.4.3 Separation Between Keys. Any key surface shall be separated from other key surfaces by 1/8 inch (3.2 mm) minimum. Function keys shall be separated from numeric keys by a distance that is not less than three times greater the distance between the numeric keys.

707.4.4 Numeric Keys. Where provided, numeric keys shall comply with 707.4.4.1 and 707.4.4.2.

707.4.4.1 Arrangement. Numeric keys shall be arranged in a 12-key telephone keypad layout with the number one key in the upper left hand corner.

707.4.4.2 Marking. The number five key shall have a single raised dot.

707.4.5 Function Keys. Where provided, function keys shall comply with 707.4.5.

707.4.5.1 Arrangement. Function keys shall be arranged in the order of enter, clear, cancel, add value and decrease value horizontally from left to right or vertically from top to bottom. Where provided, add value and decrease value function keys shall be grouped with other function keys.

707.4.5.2 Marking. Function keys shall be marked with *tactile characters* as follows: Enter or proceed key: raised circle; Clear or correct key: raised vertical line or bar; Cancel key: raised ex; Add value key: raised plus *sign*; Decrease value key: raised minus *sign*.

707.4.5.3 Color Coding. Where function keys are color coded, they shall be colored as follows: Enter or proceed key: green; Clear or correct key: black; Cancel key: red; Add value key: blue; Decrease value key: yellow.

707.5 Output. Output devices shall comply with 707.5.

Advisory 707.5
Speech output should be supplied for all displayed text and labels. For information which is presented in non-text form (e.g., a picture or graphic), consider using a verbal description unless the graphic is just decorative. When speech output is utilized, allow for the spoken message to be repeated if the message is very long.

707.5.1 Privacy. The opportunity for the same degree of privacy of output shall be available to all individuals utilizing the equipment.

707.5.2 Transaction Prompts. All transaction prompts within each operation shall be provided.

707.5.3 Input Verification. Verification of all user inputs shall be provided.

Advisory 707.5.3
An audible beep may be used to indicate that personal identification numbers have been entered.

707.5.4 Operating Instructions. Machines shall provide visual and audible instructions for operation. Visual and audible instructions shall include all information required by 707.5.4.

707.5.4.1 Initiation. Instructions shall be able to be initiated by the user of the machine.

707.5.4.2 Expedited Process. After initiation, instructions shall be available for the experienced user to expedite the transaction.

707.5.4.3 Orientation. Orientation and assistance for unfamiliar users to the physical features of the machine, operational options, and details for each function shall be provided.

707.5.5 Audible Instruction. Audible instructions shall be provided through a standard audio mini jack, a telephone handset, a wireless transmission system or another mechanism that is readily available to all customers.

707.5.6 Video Display Screen. The video display screen shall comply with 707.5.6.

Advisory 707.5.6
For video display screens required to be *accessible*, the screen should be visible and usable by persons standing and sitting.

707.5.6.1 Visibility. The screen shall be visible from a point located 40 inches (1015 mm) above the center of the clear floor *space* in front of the machine.

EXCEPTION: This requirement shall not apply to drive-up only automatic teller machines.

707.5.6.2 Characters. *Characters* displayed on the screen shall be in a sans serif font. *Characters* shall be 3/16 inch (4.8 mm) minimum in height based on the uppercase letter "I". *Characters* shall contrast with their background with either light *characters* on a dark background or dark *characters* on a light background.

707.5.7 Dispensing of Bills. Machines that dispense paper currency shall dispense the currency in descending order with the lowest denomination on top.

707.5.8 Receipts and Verification. Where a receipt is available and is requested, the following options shall be provided: a printed receipt, audible presentation of the transaction information provided on the receipt, or both.

708 Two-Way Communication Systems

708.1 General. Two-way communication systems required to be *accessible* shall comply with 708.

Advisory 708.1
Devices that do not require handsets are easier to use by people who have a limited reach.

708.2 Audible and Visual Indicators. The system shall provide both visual and audible signals.

Advisory 708.2
It is recommended that a device with a light be used to indicate visually that assistance is on the way. Consideration should be given to providing *signs* to indicate the meaning of visual signals.

708.3 Handsets. Handset cords, if provided, shall be 29 inches (735 mm) long minimum.

EXCEPTION: This requirement shall not apply to two-way communication systems provided at inaccessible *entrances*.

CHAPTER 8: SPECIAL ROOMS, SPACES, AND ELEMENTS

801 General

801.1 Scope. Special rooms, *spaces* and elements required to be *accessible* by Chapter 2 shall comply with the applicable provisions of this chapter.

802 Wheelchair Spaces and Designated Aisle Seats in Assembly Areas

802.1 General. *Wheelchair spaces*, readily removable companion seats, and designated aisle seats required in *assembly areas* shall comply with 802.

802.2 Floor or Ground Surface. The floor or ground surface of *wheelchair spaces* shall comply with 302. Changes in level are not permitted.

EXCEPTION: Slopes not steeper than 1:48 shall be permitted.

802.3 Width. A single *wheelchair space* shall be 36 inches (915 mm) minimum in width. Where multiple adjacent *wheelchair spaces* are provided, each *wheelchair space* shall be 33 inches (840 mm) minimum in width.

Figure 802.3

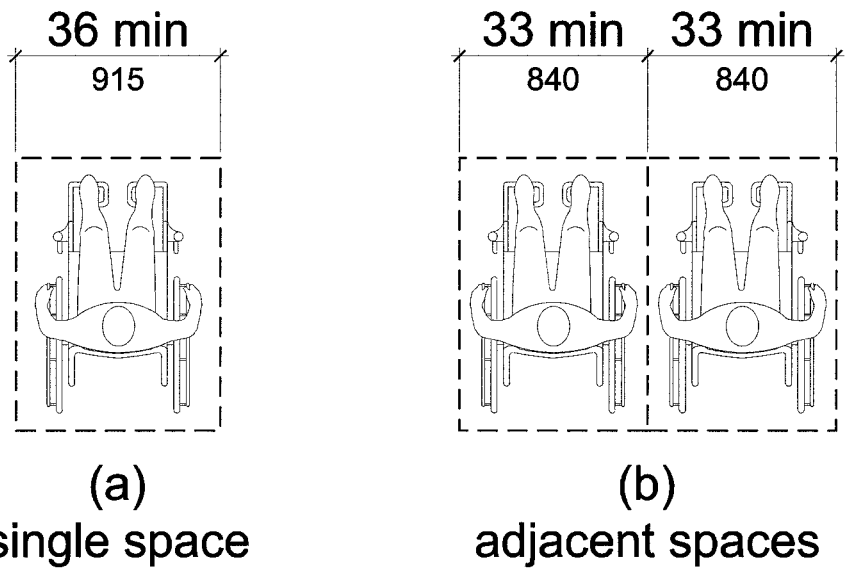

802.4 Depth. Where a *wheelchair space* can be entered from the front or rear, the *wheelchair space* shall be 48 inches (1220 mm) minimum in depth. Where a *wheelchair space* can be entered only from the side, the *wheelchair space* shall be 60 inches (1525 mm) minimum in depth.

Figure 802.4

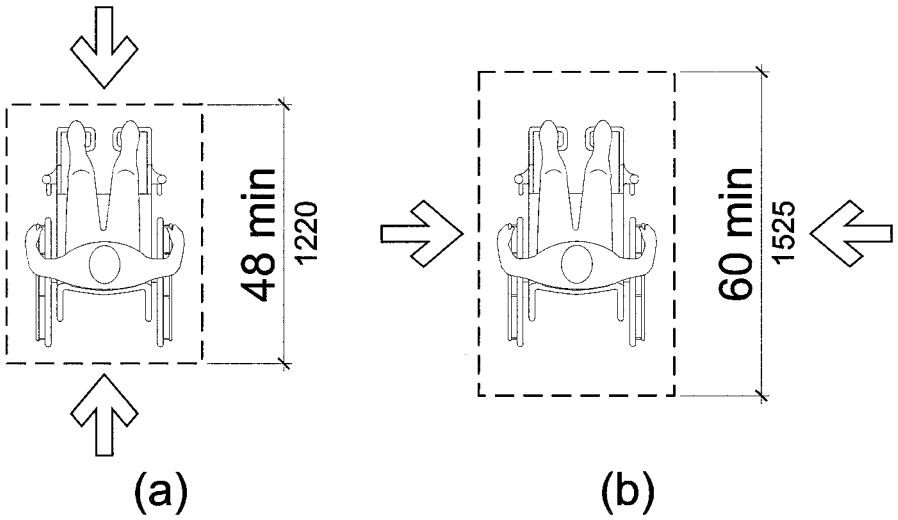

802.5 Approach. One side of the *wheelchair space* shall adjoin an *accessible route* or adjoin another *wheelchair space*. Access to any *wheelchair space* shall not be through more than one adjoining *wheelchair space*.

802.6 Dispersion of Accessible Seating. Where the number of seats exceeds 300, *wheelchair spaces* and designated aisle seats shall be dispersed to provide a choice of admission prices and viewing angles comparable to that provided to other spectators. Where the minimum number of required *wheelchair spaces* or designated aisle seats is not sufficient to allow for complete dispersion, *wheelchair spaces* or designated aisle seats shall be dispersed in the following priority: price level, horizontal dispersion and vertical dispersion.

802.6.1 Admission Prices. *Wheelchair spaces* and designated aisle seats shall be provided in each price level distinguishable by location.

802.6.2 Horizontal Dispersion. *Wheelchair spaces* and designated aisle seats shall be located to provide spectators in *accessible* seating with viewing angles generally representative of the horizontal viewing areas available to other spectators.

802.6.3 Vertical Dispersion. *Wheelchair spaces* and designated aisle seats shall be located at varying distances from the performance area on each *accessible* level and in each balcony or *mezzanine* that is located along an *accessible route*.

802.7 Readily Removable Companion Seats. A readily removable companion seat shall be provided next to and in the same row as each required *wheelchair space*. Individuals seated in companion seats shall be seated shoulder-to-shoulder with the *wheelchair* user seated in the adjacent *space*.

802.8 Designated Aisle Seats. Removable or folding armrests or no armrests shall be provided on the aisle side of designated aisle seats. Each such seat shall be identified by a *sign* or marker.

Advisory 802.8
Seats with removable or folding armrests, or no armrests, are intended for use by individuals who have difficulty walking. Consideration should be given for ensuring identification of such seats in a darkened room. For example, a marker which contrasts (light-on-dark or dark-on-light) and also reflects light could be placed on the side of adjacent seating so as to be visible in a lighted auditorium and also to reflect light from a flashlight.

802.9 Lines of Sight. Spectators seated in *wheelchair*s shall be provided lines of sight comparable to those provided to other spectators.

802.9.1 Comparable Lines of Sight for Seated Spectators. Where spectators are expected to remain seated during events, spectators seated in *wheelchair*s shall be provided with lines of sight to the performance area or playing field comparable to that provided to spectators in the seating area in closest proximity to the location of the *wheelchair spaces,* but not in the same row.

Figure 802.9.1

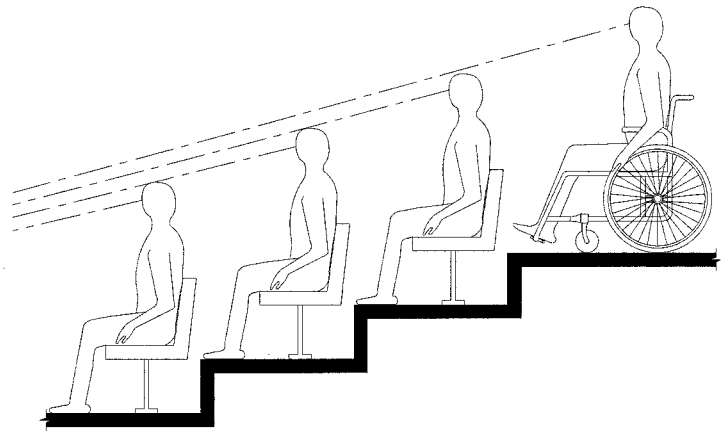

802.9.2 Comparable Lines of Sight Over Standing Spectators. Where people will be expected to stand at their seats during events, *wheelchair spaces* shall be located so that they will provide people seated in *wheelchair*s with lines of sight of the performance area or playing surface over

standing spectators comparable to that provided to standing spectators in the seating area in closest proximity to the *wheelchair spaces*, but not in the same row.

Figure 802.9.2

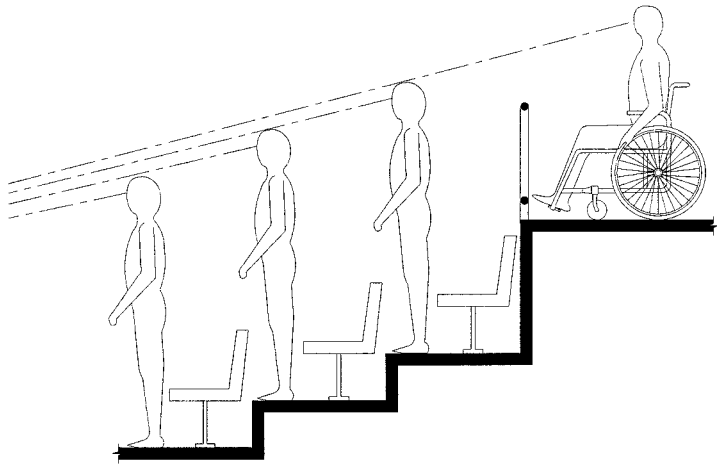

803 Dressing, Fitting, and Locker Rooms

803.1 General. Dressing, fitting, and locker rooms required to be *accessible* shall comply with 803.

803.2 Wheelchair Turning Space. *Wheelchair* turning *space* complying with 304 shall be provided within the room.

EXCEPTION: Nine inches (230 mm) maximum measured vertically and 6 inches (150 mm) maximum measured horizontally shall be permitted to extend under partitions and openings without doors.

Figure 803.2 Exception

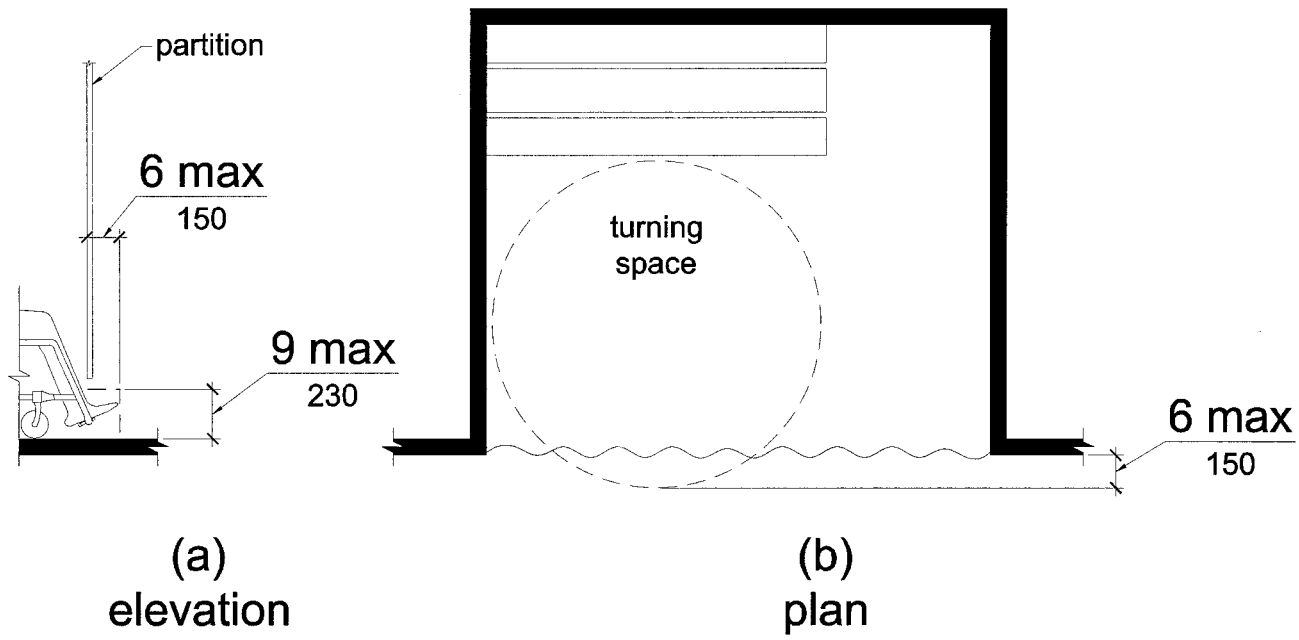

803.3 Doors. Doors shall not swing into any part of the *wheelchair* turning *space.*

803.4 Benches. A bench complying with 903 shall be provided within the room.

803.5 Coat Hooks and Shelves. *Accessible* coat hooks provided within the room shall be located within one of the reach ranges specified in 308. Where provided, a fold-down shelf shall be 40 inches (1015 mm) minimum and 48 inches (1220 mm) maximum above the floor.

804 Sinks, Kitchens, Kitchenettes, and Wet Bars

804.1 General. Sinks, kitchens, kitchenettes and wet bars shall comply with 804.

804.2 Clear Floor Space. A clear floor *space* complying with 305 shall be provided at sinks, appliances, cabinets and counters.

804.3 Cabinets. At least 50 percent of shelf *space* in cabinets shall comply with 905.

804.4 Sinks. Sinks shall comply with 606.

804.5 Appliances. *Operable parts* of appliances shall comply with 309. At least 50 percent of shelf *space* in refrigerators and freezers shall be within at least one of the reach ranges in 308.

805 Medical Care Facility Patient or Resident Sleeping Rooms

805.1 General. Medical care *facility* and long term care *facility* patient or resident sleeping rooms required to be *accessible* shall comply with 805.

805.2 Wheelchair Turning Space. *Wheelchair* turning *space* complying with 304 shall be provided within the room and shall not overlap with or extend beneath a bed.

805.3 Clear Floor or Ground Space. A clear floor *space* complying with 305 shall be provided on each side of the bed. The clear floor *space* shall be positioned for parallel approach to the side of the bed.

805.4 Toilet and Bathing Rooms. Toilet and bathing rooms that are provided as part of a patient or resident sleeping room shall comply with 603.

806 Transient Lodging Guest Rooms

806.1 General. *Transient lodging* guest rooms required to be *accessible* shall comply with 806.2. Guest rooms required to have *accessible* communication features shall comply with 806.3.

806.2 Accessible Rooms. *Accessible* guest rooms shall comply with 806.2.

Advisory 806.2
The provisions in this section do not include requirements that are common to all *accessible spaces.*

806.2.1 Living and Dining Areas. Living and dining areas shall be *accessible.*

806.2.2 Exterior Spaces. Exterior *spaces*, including patios, terraces and balconies, that serve the guest room shall be *accessible.*

806.2.3 Sleeping Areas. Not less than one sleeping area shall provide a clear floor *space* complying with 305 on both sides of a bed. The clear floor *space* shall be positioned for parallel approach to the side of the bed.

EXCEPTION: This requirement shall not apply where a single clear floor *space* complying with 305 positioned for parallel approach is provided between two beds.

806.2.4 Toilet and Bathing Facilities. Not less than one water closet, one lavatory, and one bathtub or shower shall comply with the applicable provisions of Chapter 6. Required roll-in shower compartments shall comply with 608.2.2 or 608.2.3.

806.2.4.1 Vanity Tops. If vanity tops are provided in any non-*accessible* guest toilet room, 2 ft^2 (0.2 m^2) minimum of vanity top shall be provided in each *accessible* guest toilet room and shall comply with 308 and 309. Vanity tops shall be provided at or adjacent to the lavatory.

806.2.5 Sinks, Kitchens, Kitchenettes, and Wet Bars. Sinks, kitchens, kitchenettes, and wet bars shall comply with 804.

806.2.6 Wheelchair Turning Space. *Wheelchair* turning *space* complying with 304 shall be provided within the guest room and shall not overlap with or extend beneath a bed.

806.3 Communication Features. Guest rooms required to have *accessible* communication features shall comply with 806.3.

Advisory 806.3
In guest rooms required to have *accessible* communication features, consideration should be given to ensuring compatibility with adaptive equipment used by people with hearing impairments. To ensure communication within the *facility*, as well as on commercial lines, provide telephone interface jacks that are compatible with both digital and analog signal use. If an audio headphone jack is provided on a speaker phone, a cutoff switch can be included in the jack so that insertion of the jack cuts off the speaker. If a telephone-like handset is used, the external speakers can be turned off when the handset is removed from the cradle. For headset or external amplification system compatibility, a standard subminiature jack installed in the telephone will provide the most flexibility.

806.3.1 Alarms. Visual alarms complying with 702.3.6 shall be provided.

806.3.2 Notification Devices. Visual notification devices shall be provided to alert room occupants of incoming telephone calls and a door knock or bell. Notification devices shall not be connected to visual alarm signal appliances. Permanently installed telephones shall have volume controls compatible with the telephone system and shall comply with 704.3. Permanently installed telephones shall be served by an electrical outlet complying with 309 located within 48 inches (1220 mm) of the telephone to facilitate the use of a *TTY*.

807 Holding Cells and Housing Cells or Rooms

807.1 General. Holding cells or housing cells or rooms required to be *accessible* shall comply with 807.2. Holding cells or housing cells or rooms required to have *accessible* communication features shall comply with 807.3.

807.2 Accessible Cells or Rooms. *Accessible* cells or rooms shall comply with 807.2.

807.2.1 Wheelchair Turning Space. *Wheelchair* turning *space* complying with 304 shall be provided within the cell or room and shall not overlap with or extend beneath a bed.

807.2.2 Benches. Where benches are provided, at least one bench shall comply with 903.

807.2.3 Beds. Where beds are provided, clear floor *space* complying with 305 shall be provided on at least one side of the bed. The clear floor *space* shall be positioned for parallel approach to the side of the bed.

807.2.4 Drinking Fountains and Water Coolers. Where drinking fountains or water coolers are provided, at least one shall comply with 602.1 through 602.6.

807.2.5 Toilet and Bathing Facilities. Toilet facilities or bathing facilities that are provided as part of a cell or room shall comply with 603.

Advisory 807.2.5
In holding cells, housing cells or rooms required to be *accessible*, this document does not require a separate toilet room.

807.3 Communication Features. Cells or rooms required to have *accessible* communication features shall comply with 807.3.

807.3.1 Alarms. Where audible emergency alarm systems are provided to serve the occupants of cells or rooms, visual alarms complying with 702.3.6 shall be provided.

EXCEPTION: This requirement shall not apply where inmates or detainees are not allowed independent means of egress.

807.3.2 Telephones. Permanently installed telephones, where provided within cells or rooms, shall have volume controls complying with 704.3.

CHAPTER 9: BUILT-IN FURNISHINGS AND EQUIPMENT

901 General

901.1 Scope. Built-in furnishings and equipment required to be *accessible* shall comply with the applicable provisions of this chapter.

902 Dining Surfaces and Work Surfaces

902.1 General. Dining surfaces and work surfaces required to be *accessible* shall comply with 902.2 and 902.3.

EXCEPTION: Dining surfaces and work surfaces for *children's use* shall be permitted to comply with 902.4.

902.2 Clear Floor or Ground Space. A clear floor *space* complying with 305 positioned for a forward approach shall be provided. Knee and toe clearance complying with 306 shall be provided.

902.3 Height. The tops of dining surfaces and work surfaces shall be 28 inches (710 mm) minimum to 34 inches (865 mm) maximum above the floor or ground.

Figure 902.3

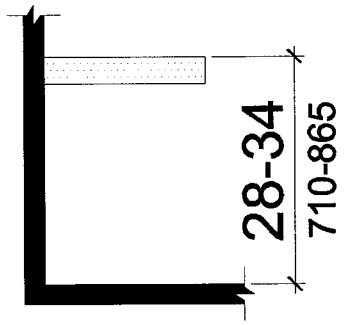

902.4 Dining Surfaces and Work Surfaces for Children's Use. *Accessible* dining surfaces and work surfaces for *children's use* shall comply with 902.4.

EXCEPTION: Dining surfaces and work surfaces that are used primarily by children ages 5 and younger shall not be required to comply with 902.4 where a clear floor or ground *space* complying with 305 positioned for a parallel approach is provided.

902.4.1 Clear Floor or Ground Space. A clear floor *space* complying with 305 positioned for forward approach shall be provided. Knee and toe clearance complying with 306 shall be provided, except that knee clearance 24 inches (610 mm) minimum above the floor or ground shall be permitted.

902.4.2 Height. The tops of tables and counters shall be 26 inches (660 mm) minimum and 30 inches (760 mm) maximum above the floor or ground.

903 Benches

903.1 General. Benches required to be *accessible* shall comply with 903.

903.2 Clear Floor or Ground Space. Clear floor or ground *space* complying with 305 shall be provided and shall be positioned for parallel approach to an end of the bench seat.

903.3 Size. Benches shall have seats that are 20 inches (510 mm) minimum to 24 inches maximum (610 mm) in depth and 42 inches (1065 mm) minimum in length. The bench shall be installed and shall have back support. Back support shall be 42 inches (1065 mm) minimum in length and shall extend from a point 2 inches (51 mm) maximum above the seat to a point 18 inches (455 mm) minimum above the seat.

Figure 903.3

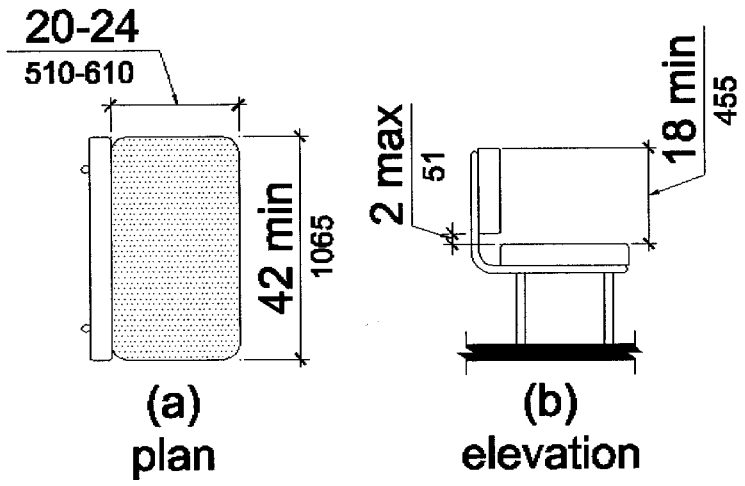

Advisory 903.3

In dressing rooms where benches are fixed to the wall for back support, consideration should be given to providing grab bars on walls adjacent to the bench but not on the seat back, to assist an individual to transfer to the bench.

903.4 Height. The bench seat shall be 17 inches (430 mm) minimum to 19 inches (485 mm) maximum above the floor or ground.

Figure 903.4

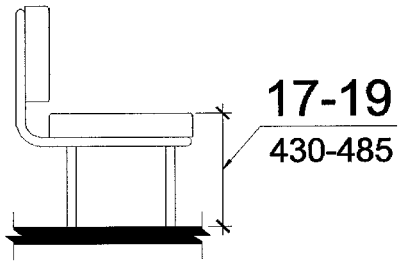

903.5 Structural Strength. Allowable stresses shall not be exceeded for materials used when a vertical or horizontal force of 250 lb (1112 N) is applied at any point on the seat, fastener, mounting device, or supporting structure.

903.6 Wet Locations. Where installed in wet locations, the surface of the seat shall be slip resistant and shall not accumulate water.

904 Sales and Service Counters

904.1 General. Counters required to be *accessible* shall comply with the applicable provisions of 904.

904.2 Approach. All portions of counters required to be *accessible* shall be located adjacent to a walking surface complying with 403.

904.3 Check-Out Aisles. Check-out aisles required to be *accessible* shall comply with 904.3.

904.3.1 Aisle. Aisles shall comply with 403.

904.3.2 Counter. The counter surface height shall be 38 inches (965 mm) maximum above the finished floor or ground. The top of the counter edge protection shall be 2 inches (51 mm) maximum above the top of the counter surface.

Figure 904.3.2

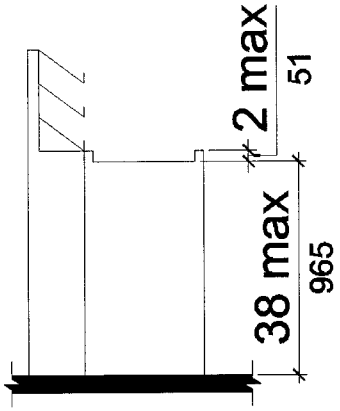

904.4 Point of Sales and Service Counters. Point of sales counters and service counters required to be *accessible* shall comply with 904.4.1 or 904.4.2.

EXCEPTION: In *alterations*, when the provision of an *accessible* counter would result in: a reduction of the number of existing counters at work stations; or a reduction of the number of existing *mail boxes*, a portion of the counter which is 24 inches (610 mm) minimum in length shall be

permitted to be *accessible* provided that the required clear floor or ground *space* is arranged so that its long dimension is centered on the *accessible* length of the counter.

Figure 904.4 Exception

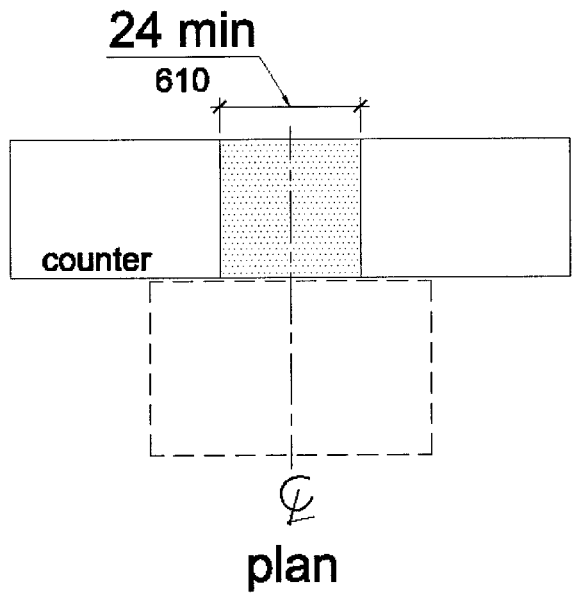

904.4.1 Parallel Approach. A portion of the counter surface which is 36 inches (915 mm) long minimum by 36 inches (915 mm) high maximum above the finish floor shall be provided. A clear floor or ground *space* complying with 305 shall be positioned for a parallel approach adjacent to the *accessible* counter.

Figure 904.4.1

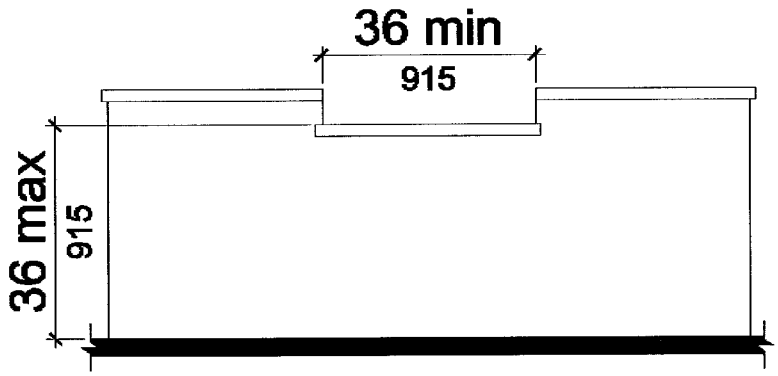

904.4.2 Forward Approach. A portion of the counter surface which is 30 inches (760 mm) long minimum by 36 inches (915 mm) high maximum shall be provided. Knee and toe *space* complying with 306 shall be provided under the *accessible* counter. A clear floor or ground *space* complying with 305 shall be positioned for a forward approach to the *accessible* counter.

Figure 904.4.2

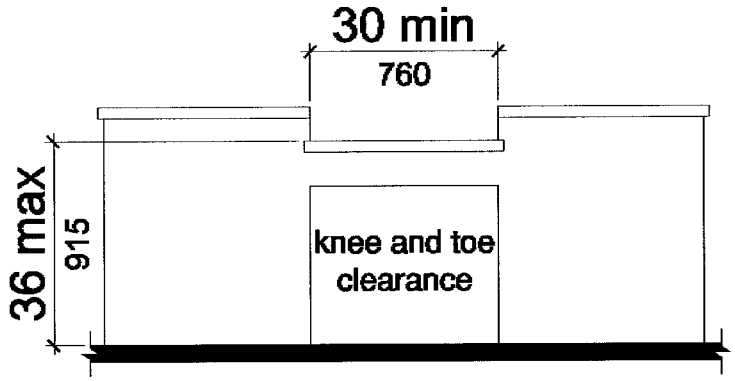

904.5 Food Service Lines. Counters in food service lines shall comply with 904.5.

904.5.1 Self-Service Shelves and Dispensing Devices. Self-service shelves and dispensing devices for tableware, dishware, condiments, food and beverages shall comply with 308.

904.5.2 Tray Slides. The tops of *accessible* portions of tray slides shall be 28 inches (710 mm) minimum and 34 inches (865 mm) maximum above the floor or ground.

Figure 904.5.2

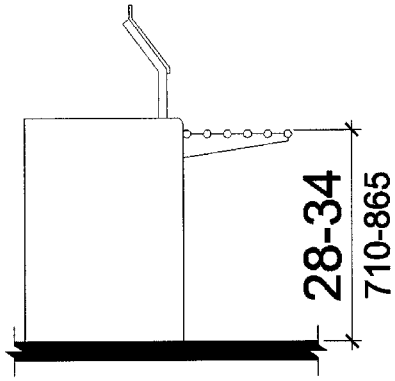

904.6 Security Glazing. Where counters or teller windows have security glazing to separate personnel from the public, at least one of each type shall provide a method to facilitate voice communication. Such

methods may include, but are not limited to, grilles, slats, talk-through baffles, intercoms, or telephone handset devices. The method of communication shall be *accessible* to both individuals who use *wheelchairs* and individuals who have difficulty bending or stooping. Hand-operable communications devices, if provided, shall comply with 704.3.

Advisory 904.6
At least one permanently installed assistive listening device complying with 706 should be provided at each location or series of counters or teller windows where there is security glazing which promotes distortion in audible information. Where assistive listening devices are installed, *signs* should be provided identifying those stations which are so equipped.

905 Storage

905.1 General. Storage *facilities* required to be *accessible* shall comply with 905.

905.2 Clear Floor or Ground Space. A clear floor or ground *space* complying with 305 shall be provided.

905.3 Height. Storage *facilities* shall comply with at least one of the reach ranges specified in 308. Clothes rods or hooks shall be located within one of the reach ranges specified in 308.

905.4 Hardware. Hardware for storage *facilities* shall comply with 309. baffles, intercoms, or telephone handset devices.

CHAPTER 10: TRANSPORTATION FACILITIES

1001 General

1001.1 Scope. Every station, bus stop, bus stop pad, terminal *building* or other transportation *facility* shall comply with the applicable provisions of Chapters 2 through 9, the applicable provisions of this chapter, and Chapter 11.

1002 Bus Stops and Terminals

1002.1 General. Bus stops and terminals shall comply with 1002.

1002.2 Bus Stop Pads. Where new bus stop pads are constructed at bus stops, bays or other areas where a lift or *ramp* is to be deployed, they shall comply with 1002.2.

Advisory 1002.2
At bus stops where a shelter is provided, the bus stop pad can be located either within or outside of the shelter.

1002.2.1 Surface. Bus stop pads shall have a firm, stable surface.

1002.2.2 Dimensions. To the maximum extent allowed by legal or *site* constraints, bus stop pads shall have a clear length of 96 inches minimum measured perpendicular to the curb or vehicle roadway edge and a clear width of 60 inches minimum measured parallel to the vehicle roadway.

Figure 1002.2.2

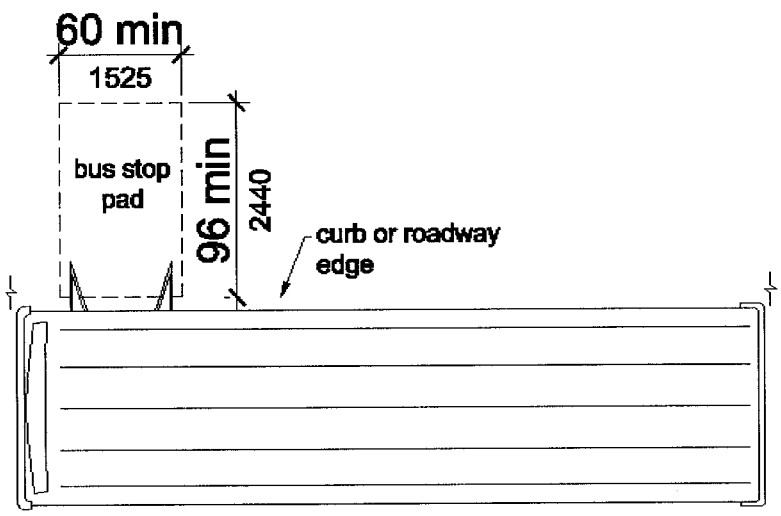

1002.2.3 Connection. Bus stop pads shall be connected to streets, sidewalks or pedestrian paths by an *accessible route* complying with 402.

1002.2.4 Slope. The slope of the bus stop pad parallel to the roadway shall, to the extent practicable, be the same as the roadway. For water drainage, a maximum slope of 1:48 perpendicular to the roadway is allowed.

1002.3 Bus Shelters. Where provided, new or replaced bus shelters shall provide a minimum clear floor or ground *space* complying with 305. Such shelters shall be connected by an *accessible route* to the boarding area required by 1002.2.

Figure 1002.3

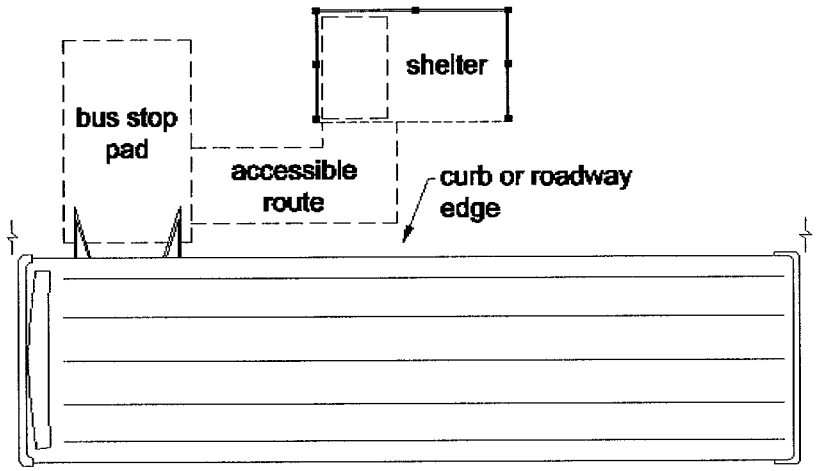

1002.4 Signs. New bus route identification *signs* shall comply with 703.4.1. In addition, to the maximum extent practicable, new bus route identification *signs* shall comply with 703.4.

EXCEPTION: Bus schedules, timetables and maps that are posted at the bus stop or bus bay are not required to comply with this requirement.

1002.5 Bus Stop Siting. Bus stop *sites* shall be chosen such that, to the maximum extent practicable, the areas where lifts or *ramps* are to be deployed comply with 1002.2 and 1002.3.

1003 Facilities and Stations

1003.1 General. *Facilities* and stations shall comply with the applicable provisions of 1003.

1003.2 New Construction. New stations in rapid rail, light rail, commuter rail, intercity rail, high speed rail, and other fixed guideway systems shall comply with the 1003.2.

1003.2.1 Station Entrances. Where different *entrances* to a station serve different transportation fixed routes or groups of fixed routes, at least one *entrance* serving each group or route shall comply with 402. All *accessible entrances* shall, to the maximum extent practicable, coincide with those used by the majority of the public. In below ground subway stations, at least one *entrance* to each station shall comply with 402.

1003.2.2 Signs.

1003.2.2.1 Tactile Signs. Where *signs* are provided at *entrances* to stations identifying the station or the *entrance*, or both, at least one *sign* at each *entrance* shall be *tactile* and shall comply with 703.2. Such *signs* shall be placed in uniform locations at *entrances* within the transit system to the maximum extent practicable.

EXCEPTION: Where the station has no defined *entrance* but *signs* are provided, the *tactile signs* shall be placed in a central location.

Advisory 1003.2.2.1 Exception
Where a station has no defined *entrance*, it may be more difficult to locate the *sign*. In this case, other technologies such as an audible *sign* system using infrared transmitters and receivers may provide greater accessibility. The transmitters are placed on or next to print *signs* and transmit their information to an infrared receiver that is held by a person. By scanning an area, the person will hear the *sign*.

1003.2.2.2 Identification Signs. Stations covered by this section shall have identification *signs* complying with 703.4. *Signs* shall be clearly visible and within the sightlines of a standing or sitting passenger from within the train on both sides when not obstructed by another train.

Advisory 1003.2.2.2
It is also important to place *signs* at intervals in the station where passengers in the vehicle will be able to see a *sign* when the vehicle is either stopped at the station or about to come to a stop in the station. The number of *signs* necessary may be directly related to the size of the lettering displayed on the *sign*.

1003.2.2.3 Informational Signs. Lists of stations, routes and destinations served by the station which are located on boarding areas, platforms, or *mezzanines* shall comply with 703.4. A minimum of one *tactile sign* identifying the specific station and complying with 703.2 shall be provided on each platform or boarding area. *Signs* covered by this provision shall, to the maximum extent practicable, be placed in uniform locations within the transit system.

Advisory 1003.2.2.3
Informational *signs* at fixed *facilities* and stations are those *signs* displaying lists of stations, routes, and destinations served by the station. Route maps are not required to comply with the informational *sign* requirements in this document.

EXCEPTION: Where *sign* space is limited, track numbers, train destination names, directions to the ticket office, and information essential to using the transit system shall have a *character* height of 3 inches (75 mm) minimum and shall comply with 703.4. Specific exit

street names, directional information, and other information not essential to use of the transit system shall have a *character* height of 1-1/2 inches (38 mm) minimum and shall comply with 703.4.

1003.2.3 Fare Machines and Gates. Self-service fare vending, collection, and adjustment machines shall comply with 707. Where self-service fare vending, collection, and adjustment machines are provided for the use of the public, at least one *accessible* machine of each type provided shall be provided at each *accessible* point of entry or exit. Gates provided at fare collection machines required to be *accessible* shall comply with 404.

1003.2.4 Detectable Warnings. Platform edges bordering a drop-off and not protected by platform screens or guard rails shall have a *detectable warning* complying with 705.

1003.2.5 Rail-to-Platform Height. In stations covered by this section, rail-to-platform height shall be coordinated with the floor height of new vehicles so that the vertical difference, measured when the vehicle is at rest, is within plus or minus 5/8 inch (16 mm) under all normal passenger car load conditions. For rapid rail, light rail, commuter rail, high speed rail, and intercity rail systems in new stations, the horizontal gap, measured when the new vehicle is at rest, shall be 3 inches (75 mm) maximum. For automated guideway "people mover" transit systems, with a maximum speed of 20

miles per hour (12 kilometers per hour) the horizontal gap in new stations shall be 1 inch (25 mm) maximum.

Figure 1003.2.5

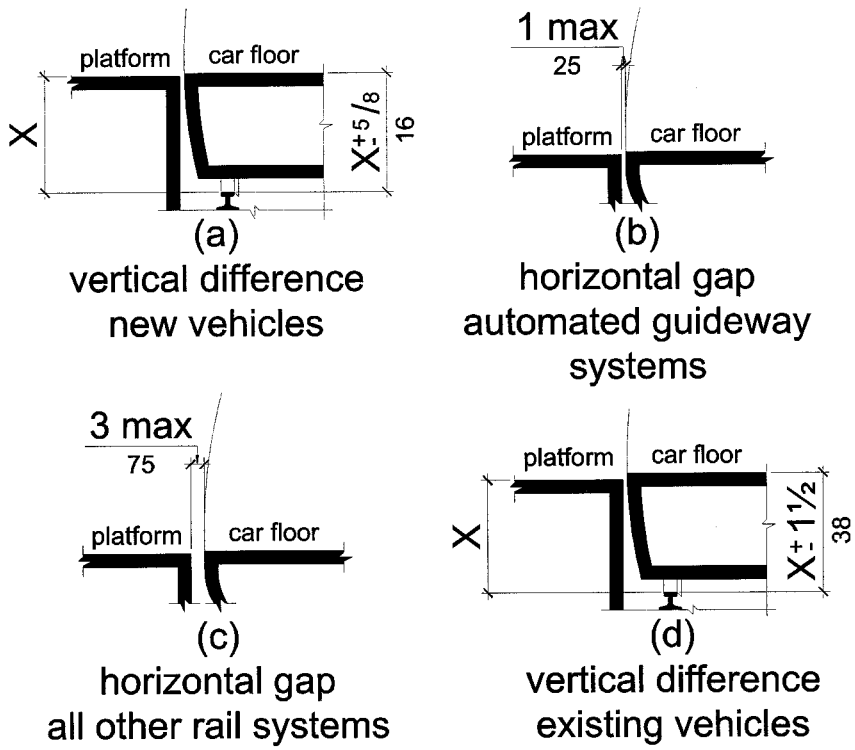

NOTE: x = rail-to-platform height

EXCEPTIONS: 1. Existing vehicles operating in new light rail, commuter rail, high speed rail, and intercity rail stations may have a vertical difference with respect to the new platform within plus or minus 1-1/2 inches (38 mm).

2. In light rail, commuter rail and intercity rail systems where it is not operationally or structurally feasible to meet the horizontal gap or vertical difference requirements, mini-high platforms, car-borne or platform-mounted lifts, *ramps* or bridge plates, or similar manually deployed devices meeting the applicable requirements of 36 CFR part 1192, or 49 CFR part 38 shall suffice.

1003.2.6 TTYs. Where a public pay telephone is provided in a transit *facility* (as defined by the Department of Transportation) at least one public *TTY* complying with 704.4 shall be provided. Where one or more public pay telephones serve a particular *entrance* to a transit *facility*, at least one *TTY* telephone complying with 704.4 shall be provided to serve that *entrance*.

1003.2.7 Track Crossings. Where it is necessary to cross tracks to reach boarding platforms, the route surface shall be level with the rail top at the outer edge and between the rails, except for a 2-1/

2 inch (65 mm) maximum gap on the inner edge of each rail to permit passage of wheel flanges. Where gap reduction is not practicable, an above-grade or below-grade *accessible route* shall be provided.

Figure 1003.2.7

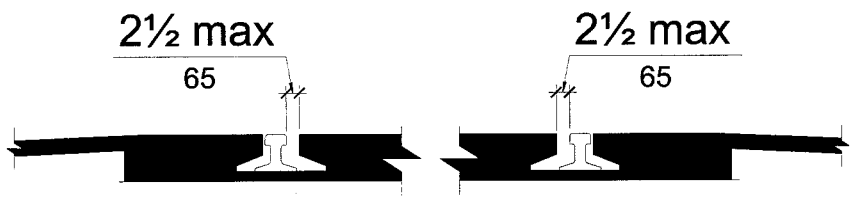

1003.2.8 Public Address Systems. Where public address systems are provided to convey information to the public in terminals, stations or other *facilities*, a means of conveying the same or equivalent information to persons with hearing loss or who are deaf shall be provided.

1003.2.9 Clocks. Where clocks are provided for use by the public, the clock face shall be uncluttered so that its *elements* are clearly visible. Hands, numerals and digits shall contrast with the background either light-on-dark or dark-on-light. Where clocks are installed overhead, numerals and digits shall comply with 703.4.

1003.2.10 Escalators. Where provided in below grade stations, escalators shall have a clear width of 32 inches (815 mm) minimum.

1003.2.11 Direct Connections. In addition to the requirements of 1003.2.1, direct connections to other facilities shall be *accessible* and have an *accessible route* complying with 402 from the point of connection to boarding platforms and all transportation system *elements* required to be *accessible*. Any *elements* provided to facilitate future direct connections shall be on an *accessible route* connecting boarding platforms and all transportation system *elements* required to be *accessible*.

1003.3 Existing Facilities: Key Stations. Rapid, light and commuter rail key stations, as defined under criteria established by the Department of Transportation in subpart C of 49 CFR part 37, and existing intercity rail stations shall comply with 1003.3.

1003.3.1 Accessible Route. *Accessible routes* from an *accessible entrance* to those areas necessary for use of the transportation system shall be provided. The *accessible route* shall include the features specified in 1003.2, except that escalators shall not be required to comply with 1003.2.10. Where *technical infeasibility* in existing stations requires the *accessible route* to lead from the *public way* to a paid area of the transit system, an *accessible* fare collection machine complying with 1003.2.3 shall be provided along such *accessible route*.

1003.3.2 Rail-to-Platform Height. In light rail and commuter rail key stations, the platform or a portion thereof and the vehicle floor shall be coordinated so that the vertical difference, measured when the vehicle is at rest, is within plus or minus 1-1/2 inches (38 mm) under all normal passenger

load conditions, and the horizontal gap, measured when the vehicle is at rest, is 3 inches (75 mm) maximum for at least one door of each vehicle or car required to be *accessible* by 49 CFR part 37.

EXCEPTIONS: 1. Existing vehicles retrofitted to meet the requirements of 49 CFR 37.93 (one-car-per-train rule) shall be coordinated with the platform such that, for at least one door, the vertical difference between the vehicle floor and the platform, measured when the vehicle is at rest with 50 percent normal passenger capacity, is within plus or minus 2 inches (51 mm) and the horizontal gap is 4 inches (100 mm) maximum.

Figure 1003.3.2 Exception 1

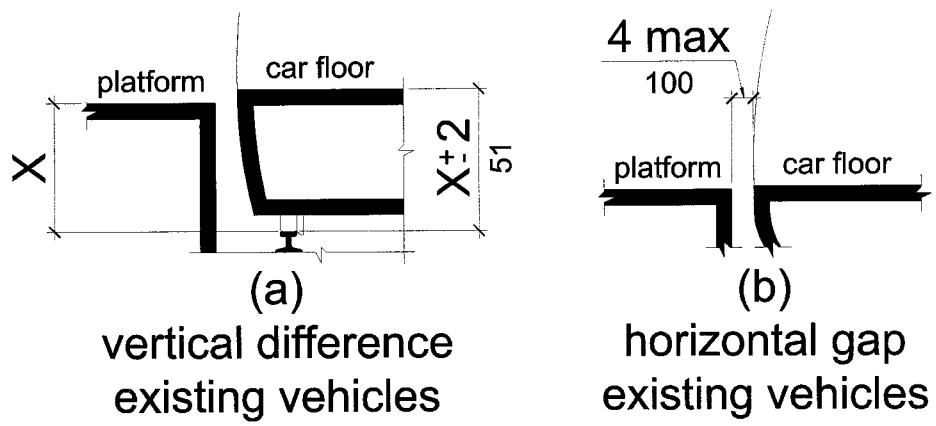

NOTE: X = rail-to-platform height

2. Where it is not structurally or operationally feasible to meet the horizontal gap or vertical difference requirements, mini-high platforms, car-borne or platform mounted lifts, *ramps* or bridge plates, or similar manually deployed devices, meeting the applicable requirements of 36 CFR Part 1192 shall suffice.

1003.3.3 Direct Connections. In addition to the requirement of 1003.3.1, new direct connections to other *facilities* shall be *accessible* and, shall have an *accessible route* complying with 402 from the point of connection to boarding platforms and all transportation system *elements* required to be *accessible*. Any *elements* provided to facilitate future direct connections shall be on an *accessible route* connecting boarding platforms and all transportation system *elements* required to be *accessible*.

1004 Airports

1004.1 New Construction. New construction of airports shall comply with 1004.

1004.2 TTYs. Where public pay telephones are provided, at least one *TTY* shall be provided in compliance with 704.4. Additionally, if four or more public pay telephones are located in a main terminal

outside the security areas, a concourse within the security areas, or a baggage claim area in a terminal, at least one public *TTY* complying with 704.4 shall also be provided in each such location.

1004.3 Terminal Information Systems. Terminal information systems that broadcast information to the public through a public address system shall provide a means to provide the same or equivalent information to persons with a hearing loss or who are deaf.

1004.4 Clocks. Where clocks are provided for use by the public, the clock face shall be uncluttered so that its *elements* are clearly visible. Hands, numerals and digits shall contrast with their background either light-on-dark or dark-on-light. Where clocks are installed overhead, numerals and digits shall comply with 703.4.

CHAPTER 11: RESIDENTIAL FACILITIES

1101 General

1101.1 Scope. Every residential *facility* containing *dwelling units* shall comply with the applicable provisions of Chapters 2 through 10 and the applicable provisions of this chapter.

1102 Accessible Dwelling Units

1102.1 General. *Accessible dwelling units* shall comply with 1102.

1102.2 Primary Entrance. The primary *entrance* to an *accessible dwelling unit* shall be located on an *accessible route* from *accessible common use* or *public use* areas. The primary *entrance* shall not be to a bedroom.

1102.3 Accessible Route. *Accessible route*s within *accessible dwelling units* shall comply with 1102.3.

EXCEPTIONS: 1. Exterior *spaces* less than 30 inches (760 mm) in depth or width shall comply with 1102.3.1, 1102.3.3, 302 and 303.
2. Unfinished attics and unfinished basements shall not be required to comply with this section.

1102.3.1 Location. At least one *accessible route* shall connect all spaces and *elements* which are a part of the *dwelling unit*. Where only one *accessible route* is provided, it shall not pass through restrooms, closets or similar *spaces*.

1102.3.2 Wheelchair Turning Space. All rooms served by an *accessible* route shall provide a *wheelchair* turning *space* complying with 304.

1102.3.3 Components. *Accessible routes* shall consist of one or more of the following *elements*: floor or *ground surfaces* with a slope not steeper than 1:20, *ramps*, elevators, and *wheelchair* (platform) lifts.

1102.4 Walking Surfaces. Walking surfaces that are part of an *accessible route* shall comply with 403.

1102.5 Doors and Doorways. The primary *entrance* door to the *dwelling unit*, and all other doorways intended for user passage, shall comply with 404.

Advisory 1102.5
In addition to the requirements for *accessible dwelling units*, at least one *entrance* door to each *dwelling unit* that is not required by this part to be *accessible* should have a 32 inch (815 mm) clear opening. In in*accessible dwelling units*, interior doors that are intended for user passage should provide a nominal 32-inch clear opening. Where units are not required to be *accessible*, a 34-inch door provides an acceptable nominal 32-inch clear opening.

1102.6 Ramps. *Ramps* shall comply with 405.

1102.7 Private Residence Elevators. Private residence elevators shall comply with 1102.7and with ASME/ANSI A17.1.

EXCEPTION: Elevators complying with 407 shall be permitted.

1102.7.1 Automatic Operation. Elevator operation shall be automatic. Each car shall automatically stop at a floor landing within a tolerance of 1/2 inch (13 mm) under rated loading to zero loading conditions.

1102.7.2 Call Buttons. Call buttons at elevator landings shall comply with 309.3. Call buttons shall be 3/4 inch (19 mm) minimum in the smallest dimension.

1102.7.3 Doors and Gates. Elevator car and hoistway doors and gates shall comply with 404, except that the maneuvering clearances required by 404.2.4.1 for approaches to the push side of swinging doors shall not apply. Elevator car doors and gates shall be power operated. For elevators with a car that has more than one opening, the hoistway doors and gates shall be permitted to be of the manual-open, self-close type. Elevators with a single opening car shall have low-energy power-operated hoistway doors and gates. Power operated doors and gates shall comply with ANSI/BHMA A156.19 and shall remain open for 20 seconds minimum when activated.

1102.7.4 Inside Dimensions of Elevator Cars. Elevator cars shall provide a clear floor *space* complying with 305. Car gates or doors shall be positioned at the narrow end of the clear floor *space*. The clearance between the car platform sill and the edge of any hoistway landing shall be 1-1/4 inches (32 mm) maximum.

1102.7.5 Floor Surfaces. Floor surfaces in elevator cars shall comply with 302 and 303.

1102.7.6 Illumination Levels. The level of illumination at the car controls, platform, and car threshold and landing sill shall be 5 footcandles (54 lux) minimum.

1102.7.7 Car Controls. Elevator car controls shall comply with 1102.7.7.

1102.7.7.1 Buttons. Control buttons shall be 3/4 inch (19 mm) minimum in their smallest dimension. Control buttons shall be raised or flush.

Figure 1102.7.7.1

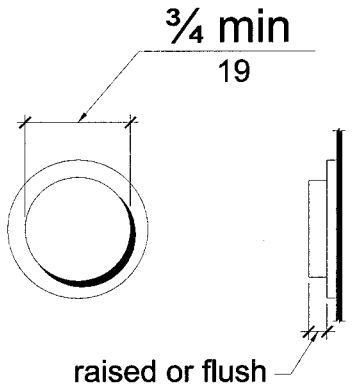

1102.7.7.2 Height. Buttons with floor designations shall comply with 309.3.

1102.7.7.3 Location. Controls shall be on a side wall, 12 inches (305 mm) minimum from any adjacent wall.

Figure 1102.7.7.3

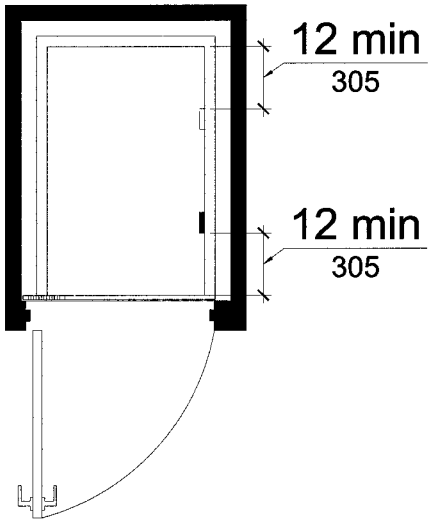

1102.7.8 Emergency Communications. A telephone and emergency signal device shall be provided in the car. The telephone and emergency signaling device shall comply with 309.3. If the device is in a closed compartment, the compartment door hardware shall comply with 309. The telephone cord shall be 29 inches (735 mm) long minimum.

1102.8 Wheelchair Lifts. *Wheelchair* (platform) lifts shall comply with ASME/ANSI A17.1 and with 408.

1102.9 Operable Parts. Lighting controls, electrical switches and receptacles, environmental controls, appliance controls, plumbing fixture controls, and user controls for security or intercom systems shall comply with 309.

EXCEPTIONS: 1. Electrical receptacles serving a dedicated use shall be not be required to comply with 309.
2. A single outlet shall be permitted to be inaccessible where all of the following conditions are met:
(a) the outlet is above a length of countertop that is uninterrupted by a sink or appliance;
(b) at least one receptacle complying with 1102.9 is provided for that length of countertop; and
(c) all other receptacles provided for that length of countertop comply with 1102.9.
3. Floor electrical receptacles shall be permitted to be inaccessible.
4. HVAC diffusers shall be permitted to be inaccessible.
5. Controls mounted on range hoods shall be permitted to be inaccessible if *accessible* redundant controls are provided.
6. Ceiling fan mounted controls shall be permitted to be inaccessible.

1102.10 Laundry Equipment. Washing machines and clothes dryers shall comply with 611.

1102.11 Toilet and Bathing Facilities. All toilet *facilities* and bathing *facilities* shall comply with 1102.11.

1102.11.1 Doors. Doors shall not swing into the clear floor or ground *space* or clearance for any fixture.

EXCEPTION: Where a clear floor or ground *space* complying with 305.3 is provided within the room, beyond the arc of the door swing, the door shall be permitted to swing into clear floor or ground *space* or clearance for fixtures.

1102.11.2 Overlap. Clear floor or ground *spaces*, clearances, and *wheelchair* turning *spaces* shall be permitted to overlap.

1102.11.3 Lavatory. Lavatories shall comply with 606.

EXCEPTION: Cabinetry shall be permitted under the lavatory provided the following conditions are met:
(a) the cabinetry can be removed without removal or replacement of the lavatory;
(b) the finish floor extends under the cabinetry; and

(c) the walls behind and surrounding cabinetry are finished.

Advisory 1102.11.3 Exception
Walls surrounding cabinetry must be finished so that when the front facing cabinet is removed, no additional finishing work is required.

1102.11.4 Mirrors. Mirrors above lavatories shall have the bottom edge of the reflecting surface 40 inches (1015 mm) maximum above the floor or ground.

Figure 1102.11.4

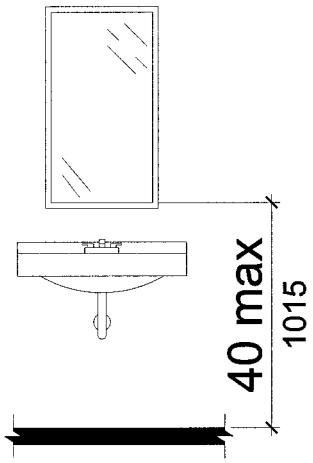

1102.11.5 Water Closet. Water closets shall comply with 1102.11.5.

1102.11.5.1 Location. The water closet shall be positioned with a wall to the rear and to one side. The centerline of the water closet shall be 16 inches (405 mm) minimum and 18 inches (455 mm) maximum from the side wall.

Figure 1102.11.5.1

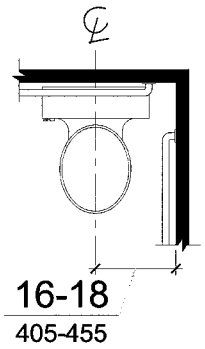

1102.11.5.2 Clearance. Clearance around the water closet shall comply with 1102.11.5.2.

1102.11.5.2.1 Parallel Approach. Where only a parallel approach is provided to the water closet, the clearance shall be 56 inches (1420 mm) minimum, measured perpendicular from the rear wall, and 48 inches (1220 mm) minimum, measured perpendicular from the side wall. A lavatory complying with 1102.11.3 shall be permitted on the rear wall, 18 inches (455 mm) minimum from the water closet centerline.

Figure 1102.11.5.2.1

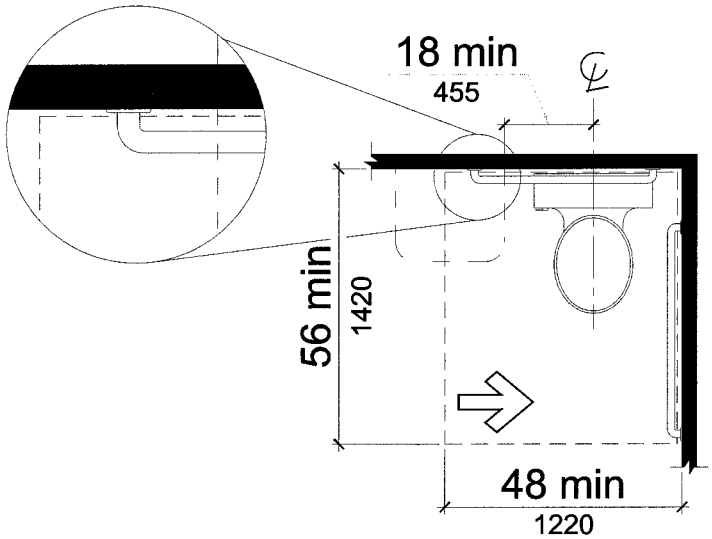

1102.11.5.2.2 Forward Approach. Where only a forward approach is provided to the water closet, the clearance shall be 66 inches (1675 mm) minimum, measured perpendicular from the rear wall, and 48 inches (1220 mm) minimum, measured perpendicular from the side wall. A lavatory complying with 1102.11.3 shall be permitted on the rear wall, 18 inches (455 mm) minimum from the water closet centerline.

Figure 1102.11.5.2.2

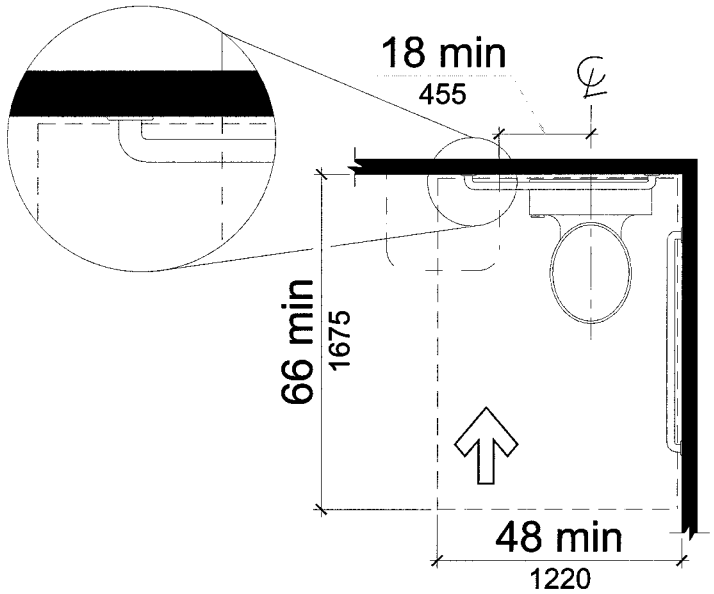

1102.11.5.2.3 Parallel and Forward Approach. Where both a parallel and a forward approach are provided to the water closet, the clearance shall be 56 inches (1420 mm) minimum, measured perpendicular from the rear wall, and 60 inches (1525 mm) minimum,

measured perpendicular from the side wall. No fixtures or obstructions, other than the water closet, shall be within the clearance.

Figure 1102.11.5.2.3

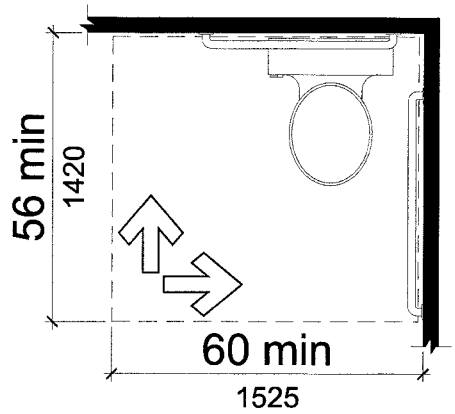

1102.11.5.3 Height. The top of the toilet seat shall be 15 inches (380 mm) minimum and 19 inches (485 mm) maximum above the floor or ground.

Figure 1102.11.5.3

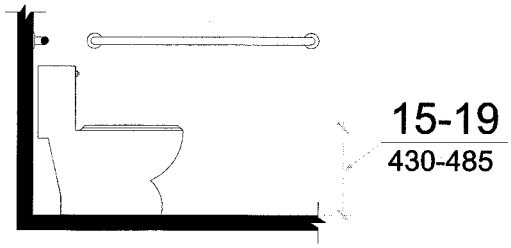

1102.11.5.4 Grab Bars. Grab bars complying with 604.5 shall be provided.

EXCEPTION: Grab bars shall not be required where reinforcement has been provided in walls to permit the installation of grab bars complying with 604.5.

Advisory 1102.11.5.4 Exception
Reinforcement must be sufficient to permit the installation of rear and side wall grab bars that fully meet all accessibility requirements including, but not limited to, required length, installation height, and structural strength.

1102.11.5.5 Flush Controls. Hand operated flush controls shall comply with 1102.9.

1102.11.6 Bathtub. Bathtubs shall comply with 607.

EXCEPTIONS: 1. The removable in-tub seat required by 607.3 shall not be required.
2. Grab bars shall not be required, where reinforcement has been provided in walls to permit the installation of grab bars complying with 607.4.

1102.11.7 Shower. Showers shall comply with 608.

EXCEPTIONS: 1. A shower seat shall not be required in transfer-type showers, where reinforcement has been provided in a wall to permit the installation of a seat complying with 610.3.
2. Grab bars shall not be required, where reinforcement has been provided in walls to permit the installation of grab bars complying with 608.3.

1102.12 Kitchens. Kitchens shall comply with 1102.12.

1102.12.1 Clearance. Clearance complying with 1102.12.1.1 and 1102.12.1.2 shall be provided.

1102.12.1.1 Galley. In kitchens with counters, appliances or cabinets on two opposing sides, clearance between all opposing base cabinets, counter tops, appliances, or walls within kitchen work areas shall be 40 inches (1015 mm) minimum.

Advisory 1102.12.1.1
The 40 inches (1015 mm) minimum is measured from the furthest projecting face of all opposing base cabinets, countertops, appliances, or walls, excluding hardware.

1102.12.1.2 U-Shaped. In kitchens with counters, appliances, or cabinets on three contiguous sides, clearance between all opposing base cabinets, countertops, appliances, or walls within kitchen work areas shall be 60 inches (1525 mm) minimum.

1102.12.2 Clear Floor or Ground Space. Clear floor or ground *spaces* required by 1102.12.3 through 1102.12.6 shall comply with 305.

1102.12.3 Work Surface. At least one 30 inches (760 mm) wide minimum section of counter shall provide a work surface that complies with 1102.12.3.

Figure 1102.12.3

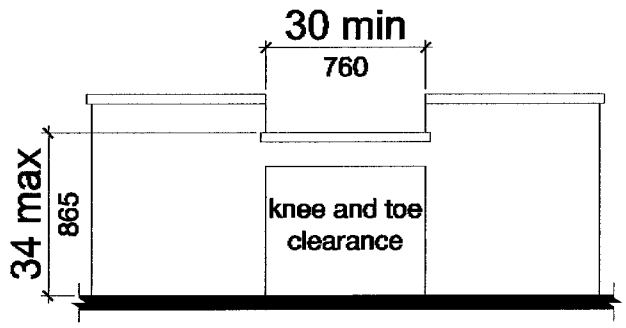

1102.12.3.1 Clear Floor or Ground Space. A clear floor *space* complying with 305 positioned for a forward approach shall be provided. The clear floor or ground *space* shall be centered on the work surface. The clear floor or ground *space* shall provide knee and toe clearance complying with 306.

EXCEPTION: Cabinetry shall be permitted under the work surface, where such cabinetry can be removed without removal or replacement of the work surface, where the finish floor extends under such cabinetry, and where walls behind and surrounding cabinetry are finished.

1102.12.3.2 Height. The work surface shall be 34 inches (865 mm) maximum above the floor or ground.

EXCEPTION: A counter that is adjustable to provide a work surface at variable heights 29 inches (735 mm) minimum and 36 inches (915 mm) maximum shall be permitted.

1102.12.3.3 Exposed Surfaces. There shall be no sharp or abrasive surfaces under the work surface counters.

1102.12.4 Sink. The sink and surrounding counter shall comply with 1102.12.4. The width of the sink and surrounding counter shall be 30 inches (760 mm) minimum.

Figure 1102.12.4

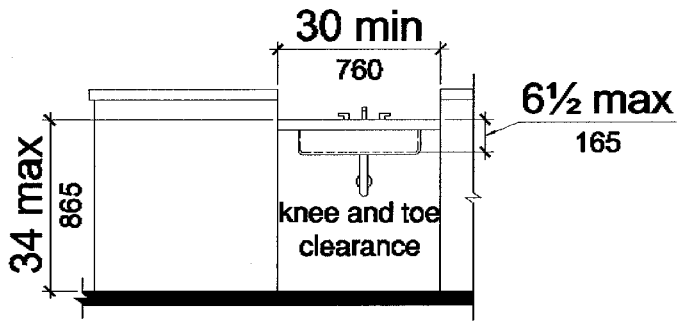

1102.12.4.1 Clear Floor or Ground Space. A clear floor or ground *space* complying with 305 and positioned for a forward approach shall be provided. The clear floor or ground *space* shall be centered on the sink bowl. The clear floor or ground *space* shall provide knee and toe clearance complying with 306.

EXCEPTIONS: 1. Cabinetry shall be permitted under the sink, where such cabinetry can be removed without removal or replacement of the sink, where the finish floor extends under such cabinetry, and where walls behind and surrounding cabinetry are finished.
2. Adjustable-height sinks complying with 1102.12.4.2 are not required to provide knee clearance where placed at heights below 34 inches (865 mm).

1102.12.4.2 Height. The sink and surrounding counter shall be 34 inches (865 mm) maximum above the floor or ground, measured to the higher of the fixture rim or the counter surface.

EXCEPTION: Sink and counter that is adjustable to variable heights 29 inches (735 mm) minimum and 36 inches (915 mm) maximum shall be permitted where rough-in plumbing permits connections of supply and drain pipes for sinks mounted at the height of 29 inches (735 mm).

1102.12.4.3 Sink Bowl. The depth of a sink bowl shall be 6-1/2 inches (165 mm) maximum measured from the higher of the fixture rim or the counter surface. Multiple-compartment sinks shall have at least one compartment complying with this requirement.

1102.12.4.4 Faucets. Faucets shall comply with 309.

1102.12.4.5 Exposed Pipes and Surfaces. Water supply and drain pipes under sinks shall be insulated or otherwise configured to protect against contact. There shall be no sharp or abrasive surfaces under sinks.

1102.12.5 Kitchen Storage. Cabinets shall have a clear floor or ground *space* complying with 305, positioned for parallel or forward approach.

1102.12.6 Appliances. Where provided, kitchen appliances shall comply with 1102.12.6.

1102.12.6.1 Clear Floor or Ground Space. A clear floor or ground *space* complying with 305 positioned for parallel or forward approach shall be provided at each kitchen appliance. Clear floor or ground *spaces* shall be permitted to overlap.

1102.12.6.2 Operable Parts. All appliance controls shall comply with 1102.9.

1102.12.6.3 Dishwasher. Clear floor or ground *space* shall be positioned adjacent to the dishwasher door. The dishwasher door, in the open position, shall not obstruct the clear floor or ground *space* for the dishwasher or the sink.

1102.12.6.4 Range or Cooktop. Where a forward approach is provided, the clear floor or ground *space* shall provide knee and toe clearance complying with 306. Where knee and toe *space* is provided, the underside of the range or cooktop shall be insulated or otherwise configured to prevent burns, abrasions, or electrical shock. The location of controls shall not require reaching across burners.

1102.12.6.5 Oven. Ovens shall have controls on front panels, to the side of the door.

1102.12.6.5.1 Side-Hinged Door Ovens. Side-hinged door ovens shall have the work surface required by 1102.12.3 positioned adjacent to the latch side of the oven door.

1102.12.6.5.2 Bottom-hinged Door Ovens. Bottom-hinged door ovens shall have the work surface required by 1102.12.3 positioned adjacent to one side of the door.

1102.12.6.6 Refrigerator/Freezer. Combination refrigerators and freezers shall have at least 50 percent of the freezer *space* 54 inches (1370 mm) maximum above the floor or ground. The clear floor or ground *space* shall be positioned for a parallel approach to the *space* dedicated to a refrigerator/freezer with the centerline of the clear floor or ground *space* offset 24 inches (610 mm) maximum from the centerline of the dedicated *space*.

1102.12.6.7 Trash Compactor. A clear floor or ground *space* complying with 305 positioned for parallel or forward approach shall be provided.

1102.13 Windows. Where glazed openings are provided in *accessible* rooms or *spaces* for operation by the occupants, at least one opening shall comply with 309. In *accessible* rooms or *spaces,* each glazed opening required to be operable by the local *administrative authority* shall comply with 309.

1102.14 Storage Facilities. Where storage *facilities* are provided, they shall comply with 1102.14.

EXCEPTION: Kitchen cabinets shall comply with 1102.12.5.

1102.14.1 Clear Floor or Ground Space. A clear floor or ground *space* complying with 305 positioned for a parallel or forward approach shall be provided at each storage *facility.*

1102.14.2 Height. A portion of the storage area of each storage *facility* shall accommodate a forward reach or side reach complying with 308.

1102.14.3 Operable Parts. *Operable parts* on storage *facilities* shall comply with 309.

1103 Dwelling Units with Accessible Communication Features

1103.1 General. *Dwelling units* required to have *accessible* communication features shall comply with 1103.

1103.2 Dwelling Unit Smoke Detection. Where provided, *dwelling unit* smoke detection shall include audible notification complying with NFPA 72.

1103.3 Building Fire Alarm System. Where a *building* fire alarm system is provided, the system wiring shall be extended to a point within the *dwelling unit* in the vicinity of the *dwelling unit* smoke detection system.

1103.4 Visual Alarm Appliances. Visible notification appliances, where provided within the *dwelling unit* as part of the *dwelling unit* smoke detection system or the *building* fire alarm system, shall comply with 1103.4.

1103.4.1 Appliance. Visual alarm appliance shall comply with NFPA 72.

1103.4.2 Activation. All visual alarm appliances provided within the *dwelling unit* for smoke detection notification shall be activated upon smoke detection. All visual alarm appliances provided within the *dwelling unit* for *building* fire alarm notification shall be activated upon activation of the *building* fire alarm in the portion of the *building* containing the *dwelling unit.*

1103.4.3 Interconnection. The same visual alarm appliances shall be permitted to provide notification of *dwelling unit* smoke detection and *building* fire alarm activation.

1103.4.4 Prohibited Use. Visual alarm appliances used to indicate *dwelling unit* smoke detection or *building* fire alarm activation shall not be used for any other purpose within the *dwelling unit.*

1103.5 Dwelling Unit Primary Entrance. Communication features shall be provided at the *dwelling unit* primary *entrance* complying with 1103.5.

1103.5.1 Notification. A hard-wired electric doorbell shall be provided. A button or switch shall be provided outside the *dwelling unit* primary *entrance.* Activation of the button or switch shall initiate an audible tone and visible signal within the *dwelling unit.* Visible doorbell signals that are located in the sleeping areas shall have controls to deactivate the signal.

1103.5.2 Identification. A means for visually identifying a visitor without opening the *dwelling unit* entry door shall be provided. Peepholes, where used, shall provide a minimum 180 degree range of view.

Advisory 1103.5.2
In doors, peepholes that include prisms clarify the image and should offer a wide-angle view of the hallway or exterior for both standing persons and *wheelchair* users. Such peepholes can be placed at a standard height and permit a view from several feet from the door.

1103.6 Site, Building or Floor Entrance. Where a system permitting voice communication between a visitor and the occupant of the *dwelling unit* is provided at a location other than the *dwelling unit* entry door, the system shall comply with 1103.6.

1103.6.1 Common Use or Public Use System Interface. The *common use* or *public use* system interface shall include the capability of supporting voice and *TTY* communication with the *dwelling unit* interface.

1103.6.2 Dwelling Unit Interface. The *dwelling unit* system interface shall include a telephone jack capable of supporting voice and *TTY* communication with the *common use* or *public use* system interface.

1103.7 Closed-Circuit Communication Systems. Where a closed-circuit communication system is provided, the *common use* or *public use* system interface shall comply with 1103.6.1, and the *dwelling unit* system interface in units required to have *accessible* communication features shall comply with 1103.6.2.

[FR Doc. 99–29250 Filed 11–15–99; 8:45 am]
BILLING CODE 8150–01–C

federal register

Tuesday
November 16, 1999

Part III

Securities and Exchange Commission

17 CFR Parts 230, 240 and 270

Delivery of Disclosure Documents to Households; Final Rule

17 CFR Parts 230 and 240

Delivery of Proxy and Information Statements to Households; Proposed Rule

SECURITIES AND EXCHANGE COMMISSION

17 CFR Parts 230, 240 and 270

[Release Nos. 33–7766, 34–42101, IC–24123; File No. S7–27–97]

RIN 3235–AG98

Delivery of Disclosure Documents to Households

AGENCY: Securities and Exchange Commission.

ACTION: Final rule.

SUMMARY: The Commission is adopting a new rule under the Securities Act of 1933 to permit issuers and broker-dealers to satisfy the Act's prospectus delivery requirements, with respect to two or more investors sharing the same address, by sending a single prospectus, subject to certain conditions. We are adopting similar amendments to the rules under the Securities Exchange Act of 1934 and the Investment Company Act of 1940 that require the delivery of shareholder reports. The rules will provide greater convenience for investors and cost savings for issuers by reducing the number of duplicate documents that investors receive.

EFFECTIVE DATE: The new rule and rule amendments will be effective December 20, 1999.

FOR FURTHER INFORMATION CONTACT: Marilyn Mann, Senior Counsel, at (202) 942–0690, Office of Regulatory Policy, Division of Investment Management, or Elizabeth M. Murphy, Special Counsel, at (202) 942–2900, Office of Chief Counsel, Division of Corporation Finance, Securities and Exchange Commission, 450 5th Street, NW, Washington, DC 20549.

SUPPLEMENTARY INFORMATION: The Commission today is adopting rule 154 [17 CFR 230.154] under the Securities Act of 1933 [15 U.S.C. 77a] (the ''Securities Act'')[1] and amendments to rules 14a–3, 14c–3, and 14c–7 [17 CFR 240.14a–3, 240.14c–3, 240.14c–7] under the Securities Exchange Act of 1934 [15 U.S.C. 78a] (the ''Exchange Act''), and rules 30d–1 and 30d–2 [17 CFR 270.30d–1, 270.30d–2] under the Investment Company Act of 1940 [15 U.S.C. 80a] (the ''Investment Company Act'').

I. Background

The federal securities laws generally require the delivery of prospectuses and shareholder reports to investors.[2] As a result of increased ownership of securities by individuals through different types of accounts, such as brokerage accounts, individual retirement accounts and custodial accounts for minors, duplicate copies of these documents often are mailed to a single household.[3]

To reduce the number of duplicate disclosure documents delivered to investors, the Commission proposed rules in November 1997 to permit, under certain conditions, delivery of one prospectus or shareholder report to investors who share an address (''householding'').[4] We received 51 comment letters in response to the proposal.[5] Commenters generally supported householding, but many suggested changes that would affect the scope and conditions of the rules. The Commission is adopting the proposed amendments, with certain modifications that reflect many of the issues raised by commenters.

II. Discussion

A. Delivery of Prospectuses to a Household

Under new rule 154, a prospectus is considered delivered to all investors at a shared address, for purposes of the federal securities laws, if the person relying on the rule delivers the prospectus to the shared address and the investors consent to delivery of a single prospectus.[6] The rule applies to prospectuses and to prospectus supplements.

1. Scope of the Rule

As adopted, rule 154 permits the householding of all types of prospectuses except those required to be delivered for business combinations, exchange offers, or reclassifications of securities.[7] Although the Commission did not request comment on the householding of proxy materials, many commenters suggested that we consider rule amendments to permit the householding of those materials. Today in a companion release we are proposing amendments to Exchange Act rules to permit the householding of proxy and information statements.[8] The release also proposes to expand the coverage of rule 154 to include prospectuses for business combinations, exchange offers, or reclassifications of securities.

2. Addressing to Investors

Proposed rule 154 would have required the prospectus to be addressed to one person rather than a group of persons (*e.g.*, ''The Smith Household''). The Commission expressed concern in the Proposing Release that mail addressed to a group may be less likely to be opened and read, because it might be viewed as ''junk mail.'' Several commenters argued that addressing to a group may actually increase the chance

[1] Unless otherwise noted, all references to ''rule 154'' are to 17 CFR 230.154 as adopted in this release.

[2] The Securities Act requires the delivery of prospectuses to investors who buy securities from an issuer or from underwriters or dealers who participate in a registered distribution of securities. *See* Securities Act sections 2(a)(10), 4(1), 4(3), 5(b) [15 U.S.C. 77b(a)(10), 77d(1), 77d(3), 77e(b)]; *see also* rule 174 under the Securities Act [17 CFR 230.174] (regarding the prospectus delivery obligation of dealers); rule 15c2–8 under the Exchange Act [17 CFR 240.15c2–8] (prospectus delivery obligations of brokers and dealers). The Investment Company Act requires most registered investment companies (''funds'') to send annual and semiannual reports to their investors. *See* section 30(e) [15 U.S.C. 80a–29(e)]; rules 30d–1, 30d–2 under the Investment Company Act [17 CFR 270.30d–1, 270.30d–2]. Rules under the Exchange Act require other types of issuers (such as operating companies subject to Exchange Act reporting requirements) to send annual reports to their investors. *See* rules 14a–3, 14c–3 [17 CFR 240.14a–3, 240.14c–3].

[3] *See* Delivery of Disclosure Documents to Households, Securities Act Release No. 7475 (Nov. 13, 1997) [62 FR 61933 (Nov. 20, 1997)] (''Proposing Release''), at nn.1–6 and accompanying text. The problem of delivery of duplicate documents is particularly significant in the case of open-end management investment companies (''mutual funds''), which are required to send their investors annual and semiannual reports, and which generally send investors updated prospectuses each year. *See id.* at nn.1–2 and accompanying text.

[4] *See* Proposing Release, *supra* note 3.

[5] The commenters included 29 individual investors or their representatives, 15 corporate issuers, 11 financial institutions (investment advisers, mutual fund complexes, broker-dealers and bank holding companies), 3 trade associations, 1 consultant, and 1 stock exchange. Two commenters submitted two letters each, and some comment letters were signed by more than one person. The comment letters and a summary of the comments are available for public inspection and copying in the Commission's Public Reference Room, 450 5th Street, NW, Washington, DC (File No. S7–27–97).

[6] Rule 154(a). Some commenters asked us to clarify that if a single investor holds the same security in two or more accounts with the same address, the prospectus delivery requirements of section 5 of the Securities Act are satisfied if one copy of the prospectus is delivered to the investor, without the need to rely on the rule. We agree that the delivery of a single prospectus in those circumstances meets the delivery requirements of the Securities Act. Delivery of a single shareholder report also would meet the delivery requirements of the federal securities laws for shareholder reports, in similar circumstances. In addition, we believe that delivery of a single prospectus or shareholder report is sufficient if the investor is acting as custodian for securities in one or more accounts created under a state Uniform Gifts to Minors Act (''UGMA'') or Uniform Transfers to Minors Act (''UTMA'') statute.

[7] *See* rule 154(e).

[8] *See* Delivery of Proxy and Information Statements to Households, Securities Act Release No. 33–7767 (Nov. 4, 1999) (''Companion Release'').

that the envelope containing the prospectus would be opened, and would be consistent with the idea that the prospectus was intended for all the investors. The Commission agrees that this form of address should be acceptable. The rule as adopted therefore permits addressing to investors as a group, and the group may be designated by reference to any of the investors who is receiving the prospectus (*e.g.*, ''Jane Doe and Household'' or ''Household of Jane Doe'').[9] The rule also permits addressing to individuals rather than a group if each investor is included in the address (*e.g.*, ''Jane Doe and Bob Jones'').[10]

The proposed rule also would have permitted householding only if the prospectus was addressed to a *natural* person. Some commenters pointed out that this provision would prohibit addressing a prospectus to a family business that owns securities and operates out of a household shared by individual investors. Another commenter added that it may be difficult in many cases to determine whether the investor is a natural person. We agree, and the rule as adopted does not include the natural person requirement.

Proposed rule 154 would have permitted delivery of a prospectus to *any* address of an investor who shares an address with other investors consenting to householding, even if the other investors do not share the address to which the prospectus is delivered. Some commenters opposed this provision, either because the investors who do not share the delivery address might not have access to the prospectus, or because of the extra recordkeeping involved in sending the prospectus to an unshared address. Upon further consideration, we agree that delivery to one investor at an address that is not shared creates a risk that the other investors will not have access to the prospectus, and the rule as adopted requires that the prospectus be sent to the investors' *shared* address.[11]

The proposed rule also would have permitted delivery of a prospectus to an electronic address, for example, an electronic mail account. Several commenters noted the difficulty of permitting electronic delivery of householded documents. One individual investor emphasized the risks involved in using electronic delivery, especially the ease with which electronic messages might be deleted by accident.[12] Because of these concerns, we believe that investors who are householded through electronic delivery should specifically consent to this type of delivery. The rule as adopted permits the householding of prospectuses that are delivered to investors electronically only if delivery is made to a shared electronic address and the investors give written consent to householding.[13]

3. Investor Consent

a. *Written Consent.* Rule 154 permits delivery of one prospectus on behalf of two or more investors at a shared address who have given written consent to householding.[14] The investors need not be related, and the shared address can be a residential, commercial, or electronic address.[15]

b. *Implied Consent.* Rule 154 permits delivery of one prospectus on behalf of two or more investors at a shared address without written consent, if four conditions are met.[16] First, the investors must have the same last name or the person relying on the rule must reasonably believe that they are members of the same family.[17] Second, at least 60 days before householding begins each investor must have received written notice[18] with an opportunity to respond and opt out of householding.[19] The opportunity to respond must be provided by a toll-free telephone number disclosed in the notice or a reply form that accompanies the notice.[20] Third, the investors must not opt out of householding during the 60-day period. Fourth, the person relying on the rule must deliver the prospectus to a residential street address or a post office box.[21]

The Commission proposed to limit householding without written consent to situations in which investors had opened their accounts before the effective date of the new rule. We understood that persons relying on the rule would find it difficult to obtain consent from existing investors, and

[9] *See* rule 154(a)(2).

[10] *See id.* This requirement is designed to reduce confusion about whether an individual is receiving a prospectus on behalf of other investors in the household.

[11] *See* rule 154(a)(1).

[12] The commenter also stated that there may be difficulties in forwarding messages from a discontinued e-mail account with an Internet service provider.

[13] *See* rule 154(b)(4) (limiting householding without written consent to prospectuses delivered to a post office box or a residential street address). Consent issues are discussed below.

[14] Rule 154(a). A signature on a new account application form would not satisfy the written consent requirement if the account form merely refers to or incorporates by reference another document, such as the prospectus, and does not describe the householding of prospectuses. An investor can be given the option of consenting to householding for prospectuses relating only to a particular security, or consenting to delivery of any prospectus a person is required to deliver to the investor. The rule, however, does not *require* that investors be given this option of limiting their consent to a particular security.

[15] The Proposing Release noted the general requirements for electronic delivery of documents to investors. The Commission has issued two interpretive releases expressing its views on the electronic delivery of documents, including prospectuses and investment company semiannual reports. The releases state that persons using electronic delivery of information should obtain informed consent from the intended recipient or otherwise have reason to believe that any electronic means so selected will result in satisfaction of the delivery requirements. *See* Proposing Release, *supra* note 3, at n.9; Use of Electronic Media for Delivery Purposes, Securities Act Release No. 7233 (Oct. 6, 1995) [61 FR 53458 (Oct. 13, 1995)]; Use of Electronic Media by Broker-Dealers, Transfer Agents, and Investment Advisers for Delivery of Information; Additional Examples Under the Securities Act of 1933, Securities Exchange Act of 1934, and Investment Company Act of 1940, Securities Act Release No. 7288 (May 9, 1996) [61 FR 24644 (May 15, 1996)].

[16] Rule 154(b)(1)—(4).

[17] Some commenters expressed concern about their ability to discern whether certain investors at the same address are members of the same family. We believe that persons relying on the rule may, in many cases, be able to base their reasonable belief on information already provided by investors (*e.g.*, on an account application) or on any information they may have obtained from other sources. For example, it would be reasonable to infer that two persons residing at the same address are members of the same family if they have opened a joint account or have opened an account under an UGMA or UTMA statute.

[18] The notice must be a separate written statement. *See* rule 154(b)(2). The notice, as well as the envelope containing the notice, also must contain a prominent statement such as ''Important Notice Regarding Delivery of Shareholder Documents.'' *See* rule 154(b)(2)(vi). As an alternative to this requirement, if the notice is sent in a separate mailing, the prominent statement may appear either on the envelope or on the notice itself. *Id.*

[19] The notice also must state whether the consent will be for a limited or unlimited period of time, explain how the investor can revoke consent, and explain that individual delivery will resume no later than 30 days after the investor revokes consent. *See* rule 154(b)(2)(iii)—(v). In order to make the notice understandable to investors, it should be written in plain English. *See* rule 154(b)(2) note. Securities Act rule 421(d)(2) [17 CFR 230.421(d)(2)] lists the following plain English principles: (i) Short sentences; (ii) definite, concrete, everyday words; (iii) active voice; (iv) tabular presentation or bullet lists for complex material, whenever possible; (v) no legal jargon or highly technical terms; and (vi) no multiple negatives.

[20] The reply form must be pre-addressed, and returnable by business reply mail or by another method in which the person relying on the rule pays the postage. *See* rule 154(b)(2)(ii). The notice also may list additional methods of opting out of householding, such as sending the reply form to a facsimile telephone number or responding by e-mail.

[21] Rule 154 clarifies that unless the person relying on the rule has information that indicates the address is a business address, that person can assume that the address is a residence. *See* rule 154(b)(4). The rule also provides that if the sender has reason to believe that an address is that of a multi-unit building, the address must include the unit number. *See* rule 154(d). This requirement is designed to prevent the assumption that investors who live in different apartments in an apartment building are members of the same household.

were concerned that the failure of many of those investors to respond to requests for consent would preclude the benefits of householding from being realized. In the case of new investors, however, we believed that consent could be obtained when the investor opened his or her account.[22]

Fourteen commenters, representing primarily advisers to registered investment companies (''funds'') and their trade associations, urged the Commission to eliminate the written consent requirement.[23] Some of these commenters asserted that numerous administrative and compliance difficulties would be created by distinguishing between investors who must give written consent and those who need not.[24] We also received comments from 25 individual investors who urged the Commission to adopt the rule as proposed but did not specifically address the consent requirement.[25]

In consideration of the potential benefits of householding to investors, the Commission has decided not to require written consent as a prerequisite to householding with respect to all new investors. The rule permits householding with implied consent under limited conditions (discussed above) in which investors could be presumed to need only one copy of the document delivered to the household. These investors should have adequate advance notice of householding and will be able to request individual delivery of prospectuses at any time.[26] The rule as adopted also requires that, at least once a year, persons relying on the rule for the householding of open-end management investment company prospectuses explain to investors who have provided written or implied consent how they can revoke their consent.[27]

B. Shareholder Reports

The Commission is adopting amendments to rules 30d–1 and 30d–2 under the Investment Company Act and rules 14a–3, 14c–3 and 14c–7 under the Exchange Act, to permit householding of annual and semiannual reports under substantially the same conditions as those in rule 154 with respect to prospectuses.[28] Commenters supported requiring the same conditions for householding of these two types of documents.[29]

III. Cost-Benefit Analysis

The Commission is sensitive to the costs and benefits imposed by its rules. The rules adopted today permit issuers and broker-dealers to send fewer copies of disclosure documents than they currently must send, and therefore should result in savings in printing, postage, and other delivery costs for issuers and broker-dealers. Investors will benefit from the decrease in delivery costs paid by issuers and from no longer being burdened with duplicate documents. The rules require issuers and broker-dealers who rely on the rules to comply with certain procedures, including obtaining either written consents from investors or delivering notices 60 days in advance of householding. Because exemptions provided by the rules are voluntary, the Commission expects that issuers and broker-dealers generally will rely on the rules only if the benefits of householding outweigh the costs.

In the Proposing Release, the Commission requested comment on the costs and benefits of the rules. Commenters generally supported the goals of the proposal but advocated certain changes that they believed would decrease its costs and increase its benefits. In particular, most commenters who addressed the issue stated that the rule should permit householding based on implied consent for new investors, and that obtaining written consent would be too costly in many cases. As adopted, the rules permit householding based on either implied consent or written consent for new as well as existing investors.[30] This regulatory flexibility should enable issuers and broker-dealers to minimize compliance costs associated with the rules.

Several commenters estimated the percentage of prospectuses and annual reports mailed to their investors that could be eliminated through householding. One large fund complex stated that householding would yield savings in mailing costs for its funds in the range of 5 to 21 percent, depending on the fund. Another fund and brokerage firm estimated that householding would reduce prospectus and shareholder report mailings to investors in its non-proprietary open-end funds (''mutual funds'') by approximately 9 percent, a reduction of over 2 million mail pieces and a savings of approximately $1 million, assuming production, printing and mailing costs of $.50 per piece. This firm also estimated that householding would reduce prospectus mailings to its proprietary mutual fund customers by almost half (over 1.5 million mail pieces out of 3.2 million), for a savings of approximately $750,000. A corporate issuer stated that approximately 10 percent of its shareholders of record have the same mailing address. These estimates, although they vary from one issuer to another, show that the cost savings produced by householding would be considerable. The commenters' estimates also appear to be consistent with the estimates made in the Proposing Release.

[22] *See* Proposing Release, *supra* note 3, at n.20 and accompanying text.

[23] Four commenters recommended that the rule permit householding without written consent and without implied consent under the proposed conditions. Instead, they favored permitting householding if the company were to disclose its householding policies in its prospectus and provide investors a means to opt out of householding. One of these commenters suggested that investors be informed about householding through an article in an investor newsletter. We do not believe that investor consent can reasonably be inferred from silence after disclosure in a prospectus or newsletter. The suggested approach also would not necessarily work for issuers that do not periodically deliver prospectuses or newsletters.

[24] Two of these commenters stated that distinguishing between accounts that could be householded with notice, and accounts that could be householded only with written consent, would be costly and burdensome to administer, and potentially confusing for investors.

[25] Another individual investor supported requiring written consent from all investors.

[26] We are adopting as proposed the requirement that, if an investor requests resumption of individual delivery, the person relying on the rule must resume individual delivery after 30 days. *See* rule 154(c).

[27] *Id.* Unlike other issuers, open-end management investment companies (*i.e.*, mutual funds) typically send investors updated prospectuses annually. *See supra* note 3. Persons relying on the rule can make the explanation required by the rule through any means reasonably designed to reach these investors, such as in a prospectus, shareholder report, or investor newsletter. *See* rule 154(c).

[28] One difference between the conditions for householding prospectuses and semiannual reports and the conditions for householding annual reports, is that the implied consent notice concerning annual reports must be delivered separately from other communications. *See* 17 CFR 240.14a–3(e)(1)(ii)(B)(*1*). This condition for the householding of annual reports corresponds to the proposed conditions for the householding of proxy and information statements, with which annual reports are typically delivered. *See* Companion Release, *supra* note 8, at note 28.

[29] Some mutual funds already household shareholder reports in reliance on no-action letters issued by the Commission staff. *See* Oppenheimer Funds, SEC No-Action Letter (July 20, 1994); Scudder Group of Funds, SEC No-Action Letter (June 19, 1990); Allstate Enterprises Stock Fund, Inc., SEC No-Action Letter (July 22, 1973). These funds may continue to household shareholder reports of investors whose reports are already being householded, without sending notices or obtaining written consent under rules 30d–1 and 30d–2. If the investors revoke consent to householding, however, the funds should comply with the revocation provisions of the rules. In addition, if the funds household *prospectuses*, the funds would need to comply fully with rule 154.

[30] The ability to household documents based on implied consent should help maximize the number of investors householded, because it is likely that few investors who receive notices will object to being householded. One large fund complex stated in its comment letter that when it notified approximately 3 million customers of its plans to household shareholder reports, only 1,703 (.057%) asked to continue receiving separate mailings for each account.

Based on information provided by two mutual fund complexes, the Commission estimates that a prospectus costs approximately $.45 to print and deliver, and a shareholder report costs approximately $.52 to print and deliver.[31] The Commission also estimates that the average decline in the number of prospectuses and shareholder reports delivered would be between 10 and 30 percent. As of 1997, there were approximately 170 million shareholder accounts invested in mutual funds.[32] Assuming that 80 percent of mutual fund accounts receive an updated prospectus each year, resulting in the 170 million shareholder accounts receiving a total of approximately 136 million prospectuses each year, the approximate potential benefit in reduced delivery of mutual fund prospectuses as a result of rule 154 would be between $6.1 and $18.4 million per year. Each shareholder receives two reports per year, and the approximate potential benefit from adoption of the amendments to rules 30d–1 and 30d–2 would be between $17.7 and $53.0 million per year. We note, however, that the savings from the adoption of the amendments to rules 30d–1 and 30d–2 will be reduced somewhat because many funds already household reports based on Commission staff no-action positions.[33] Therefore, it is not possible to precisely estimate the number of accounts for which householding of shareholder reports will be initiated based on the amendments to rules 30d–1 and 30d–2.

With respect to the delivery of prospectuses of issuers other than mutual funds, the benefits of rule 154 would be less than the benefits discussed above, because these companies do not send prospectuses to their shareholders on an annual basis. It is likely, however, that some broker-dealers will rely on rule 154 to deliver prospectuses of issuers other than mutual funds in cases in which the broker-dealers have obtained either written or implied consent from their customers to household documents.

With respect to the delivery of annual reports by issuers other than mutual funds, these companies probably would not realize significant savings as a result of the amendments to rules 14a–3 and 14c–3 because rules 14a–3 and 14c–7 already include provisions permitting householding of the annual report, although those rules did not permit implied consent to householding. In addition, corporate commenters on the Proposing Release stated that because they generally mail the annual report together with the proxy or information statement, their ability to household the annual report is limited by their inability under current rules to household the proxy statement. As discussed above, the Commission is proposing to permit companies to household proxy and information statements in a companion release.[34]

Persons who rely on the rules would incur costs in obtaining consents from and sending notices to investors. The principal costs associated with sending the notice should be the printing costs and postage costs. These printing and postage costs should be less than the cost of sending reports to investors, and the costs should be non-recurring because the notice generally will only have to be sent once to each investor in a household. Costs of the annual explanation concerning the right to revoke consent should be low, because the explanation can be included with other matter that is routinely sent out, such as a client newsletter.

IV. Effects on Competition, Efficiency and Capital Formation

Section 23(a) of the Exchange Act requires the Commission, in adopting rules under the Exchange Act, to consider the competitive effects of such rules, if any, and to refrain from adopting a rule that would impose a burden on competition not necessary or appropriate in furthering the purposes of the Exchange Act.[35] In addition, section 3(f) of the Exchange Act and section 2(c) of the Investment Company Act provide that when the Commission is engaged in rulemaking and is required to consider whether an action is necessary or appropriate in the public interest, it must consider, in addition to the protection of investors, whether the action will promote efficiency, competition, and capital formation.[36]

The Commission does not believe the amendments to rules 14a–3, 14c–3 and 14c–7 will impose any burden on competition. Based on the reasons stated in the cost-benefit analysis above, as well as the reasons stated elsewhere in this release, the Commission believes that those rules, as well as the amendments to rules 30d–1 and 30d–2, will promote efficiency, competition, and capital formation. The rules will enable brokers and issuers to decrease printing and mailing costs. These decreased costs should promote efficiency and capital formation. The rules may also promote competition in shareholder services.

V. Paperwork Reduction Act

Certain provisions of rule 154 and the rule amendments contain ''collection of information'' requirements within the meaning of the Paperwork Reduction Act of 1995 (''PRA'').[37] The Commission submitted the collection of information requirements contained in the rules to the Office of Management and Budget for review in accordance with 44 U.S.C. 3507(d) and 5 CFR 1320.11.[38] An agency may not conduct or sponsor, and a person is not required to respond to, a collection of information unless the agency displays a valid OMB control number.[39]

The rules permit delivery of a single prospectus or shareholder report to a household to satisfy the delivery requirements with respect to two or more investors in the household. A person relying on one of the rules must obtain either written or implied consent to householding from each investor. The rules require persons who wish to household with implied consent to send a notice to each investor stating that the investors in the household will receive one prospectus or report in the future unless the investors provide contrary instructions.[40] The purpose of this requirement is to give reasonable assurance that all investors have access to the prospectus or report. Preparing and sending the initial notice and the annual explanation of the right to revoke are collections of information. The Commission did not receive any comments in response to its request for comments on the Paperwork Reduction Act analysis in the Proposing Release.

Because notices will need to be sent to an investor before householding of

[31] *See* Proposing Release, *supra* note 3, at n.29 and accompanying text.

[32] *See* Investment Company Institute, 1998 Mutual Fund Fact Book 116.

[33] *See* Proposing Release, *supra* note 3, at n.5.

[34] *See supra* note 8.

[35] 15 U.S.C. 78w(a).

[36] 15 U.S.C. 78c(f), 80a–2(c).

[37] 44 U.S.C. 3501–3520.

[38] The titles for the collections of information are: ''Rule 154 under the Securities Act of 1933, Delivery of prospectuses to investors at the same address''; ''Regulation 14A, Commission Rules 14a–1 through 14a–14 and Schedule 14A''; ''Regulation 14C, Commission Rules 14c–1 through 14c–7 and Schedule 14C''; ''Rule 30d–1 under the Investment Company Act of 1940, Reports to stockholders of management companies''; and ''Rule 30d–2 under the Investment Company Act of 1940, Reports to shareholders of unit investment trusts.'' The OMB control numbers for the rules are as follows: rule 154 (3235–0495, expires 2/28/2001); rule 14a–3, contained in Regulation 14A (3235–0059, expires 1/31/2002); rules 14c–3 and 14c–7, contained in Regulation 14C (3235–0057, expires 1/31/2002); rule 30d–1 (3235–0025, expires 2/28/2001); rule 30d–2 (3235–0494, expires 2/28/2001).

[39] 44 U.S.C. 3506(c)(1)(B)(v).

[40] Under the proposed rules, implied consent could be used only for investors who had already opened an account as of the effective date of the rules. The rules as adopted also permit the use of implied consent for new investors.

that investor's documents begins, persons that choose to rely on the rule will probably send the greatest number of notices in the first year after the rule is adopted. The Commission expects that most notices will be short, one-page statements. Accordingly, the average annual number of burden hours spent preparing and arranging delivery of the notices is expected to be low. The Commission estimates 20 hours per respondent. In addition, the Commission estimates 1 hour per respondent for preparing and delivering the annual explanation of the right to revoke.

Although rule 154 is not limited to investment companies, the Commission believes that it will be used mainly by mutual funds and by broker-dealers that deliver mutual fund prospectuses. The Commission is unable to estimate the number of issuers other than mutual funds that will rely on the rule.

The Commission estimates that there are approximately 2,900 mutual funds, approximately 545 of which engage in direct marketing and therefore deliver their own prospectuses. The Commission estimates that each direct marketed mutual fund will spend an average of 20 hours per year complying with the notice requirement of the rule, for a total of 10,900 hours. The Commission estimates that each direct marketed fund will spend 1 hour complying with the explanation of the right to revoke requirement of the rule, for a total of 545 hours. The Commission estimates that as of year-end 1998 there were approximately 300 broker-dealers that carry customer accounts and, therefore, may be required to deliver mutual fund prospectuses. The Commission estimates that each affected broker-dealer will spend, on average, approximately 20 hours complying with the notice requirement of the rule, for a total of 6,000 hours. Each broker-dealer would also spend 1 hour complying with the annual explanation of a right to revoke requirement, for a total of 300 hours. Therefore, the total number of respondents for rule 154 is 845 (545 mutual funds plus 300 broker-dealers), and the estimated total hour burden is 17,745 hours (11,445 hours for mutual funds plus 6,300 hours for broker-dealers).

With respect to the amendments to rules 30d–1 and 30d–2 under the Investment Company Act, rule 30d–1 requires management investment companies to send annual and semiannual reports to their shareholders. Rule 30d–2 requires unit investment trusts (''UITs'') that invest substantially all of their assets in shares of a management investment company to send their unitholders annual and semiannual reports containing financial information on the underlying company. The amendments to rules 30d–1 and 30d–2 will permit management investment companies and UITs to household these shareholder reports under substantially the same conditions as those in rule 154.

Every registered management investment company is subject to the reporting requirements of rule 30d–1. We estimate that there are approximately 3,515 registered management investment companies. The Commission currently estimates that the hour burden associated with rule 30d–1 is approximately 181 hours per company. As discussed above, the Commission estimates that the burden associated with the notice requirement of the amendments to rules 30d–1 and 30d–2 is approximately 20 hours per company. The Commission estimates that the burden associated with the explanation of the right to revoke is 1 hour per company. Therefore, the Commission estimates that the total burden associated with rule 30d–1 is 202 hours per company, or a total of 710,030 hours. In addition, the Commission estimates that the cost of contracting for outside services associated with the rule is $63,150 per respondent (421 hours times $150 per hour for independent auditor services), for a total cost of $221,972,250 ($63,150 times 3,515 respondents).

Rule 30d–2 applies to approximately 637 UITs. The Commission estimates that the annual burden associated with rule 30d–2 is 121 hours per respondent, including the estimated 20 hours associated with the notice requirement and the 1 hour associated with the explanation of a right to revoke requirement. The total hourly burden is therefore approximately 77,077 hours. The Commission estimates that the annual financial cost of complying with rule 30d–2 (in addition to the hourly cost) is $12,000 per respondent (80 hours times $150 per hour for independent auditor services), or a total of $7,644,000.

With respect to the amendments to rules 14a–3, 14c–3 and 14c–7, those rules are included in Regulations 14A and 14C, which contain information collection requirements related to proxy and information statements. Companies that have a class of securities registered under section 12 of the Exchange Act are subject to these requirements. The Commission estimates that the time required to prepare and arrange delivery of the notice will be approximately 20 hours per respondent per year. The Commission estimates that 9,892 respondents are subject to Regulation 14A and that approximately 989 of these will deliver the notice. The Commission estimates that the burden associated with Regulation 14A as revised per registrant delivering the notice will be approximately 74 hours, and 54 hours per registrant not delivering the notice, for a total annual burden of 553,948 hours. An estimated 253 respondents are subject to Regulation 14C and it is estimated that 25 of these will deliver the notice. The estimated burden associated with Regulation 14C as revised per registrant delivering the notice is 74 hours, and 54 hours for a registrant not delivering the notice, for a total annual burden of 14,162 hours.

	Hours	Cost
Rule 154	17,745	NA
Rule 30d–1	710,030	$221,972,250
Rule 30d–2	77,077	$7,644,000
Rule 14A	553,948	NA
Rule 14C	14,162	NA

The information collection requirements imposed by the new rule and rule amendments are required for those issuers or broker-dealers that decide to rely on the rule to obtain the benefit of sending fewer documents to each household. Those issuers or broker-dealers that decide not to obtain that benefit are not required to rely on the rule. Responses to the collection of information will not be kept confidential.

VI. Summary of Final Regulatory Flexibility Analysis

The Commission has prepared a Final Regulatory Flexibility Analysis (''FRFA'') in accordance with 5 U.S.C. 604 relating to the adopted rule and amendments. A summary of the Initial Regulatory Flexibility Analysis (''IRFA''), which was prepared in accordance with 5 U.S.C. 603, was published in the Proposing Release. No comments were received on the IRFA.

The FRFA discusses the need for, and objectives of, new rule 154 and the amendments to rules 14a–3, 14c–3, 14c–7, 30d–1, and 30d–2. The FRFA states that duplicate copies of prospectuses and shareholder reports are often mailed to a household if more than one investor in the household owns the same security. The new rule and amendments are designed to reduce the number of duplicate documents delivered to investors by permitting the delivery of one prospectus or shareholder report to two or more investors who share an address.

The FRFA provides descriptions and estimates of the number of small entities

to which the rules will apply. The term ''small business'' or ''small organization'' (collectively, ''small entity''), when used with reference to an issuer other than a fund, is defined by rule 157 under the Securities Act to include an issuer that, on the last day of its most recent fiscal year, had total assets of $5 million or less and is engaged or proposing to engage in small business financing.[41] Most of these small issuers can conduct their offerings under Regulation A, which exempts offerings from the registration requirements of the Securities Act if the sum of all cash and other consideration to be received for the securities does not exceed $5 million subject to a number of conditions.[42] These issuers do not need to deliver prospectuses. Thus, the Commission estimates that among issuers other than registered investment companies, very few small issuers, as defined in rule 157 under the Securities Act, will be affected by rule 154.

As defined in rule 157, a fund generally is a small entity if it has net assets of $50 million or less as of the end of its most recent fiscal year.[43] The Commission staff estimates that there are approximately (i) 2,900 active open-end funds, of which 475 are small entities, (ii) 678 active closed-end funds, of which 115 are small entities, and (iii) 745 active registered UITs, about 81 of which are small entities. Closed-end funds and UITs will be affected by rule 154 only when they are offering their shares.

A broker-dealer generally is a small entity if it has total capital (*i.e.,* net worth plus subordinated liabilities) of less than $500,000 in its prior audited financial statements or, if it is not required to file such statements, on the last business day of the preceding fiscal year.[44] The delivery of prospectuses and shareholder reports is likely to be handled only by broker-dealers that carry public customer accounts. The Commission staff estimates that as of year-end 1998, broker-dealers carrying public customer accounts numbered approximately 300 firms, 40 of which were small businesses.

Rule 30d–1 applies to management funds (*i.e.,* open-end and closed-end funds). The staff estimates that out of approximately 3,515 active management funds, approximately 587 are considered small entities.[45] Rule 30d–2 applies to registered UITs, substantially all the assets of which consist of securities issued by a management investment company. The staff estimates that out of approximately 637 registered UITs that are subject to rule 30d–2, approximately 19 are considered small entities.

Rules 14a–3, 14c–3 and 14c–7 apply to companies that are subject to the Exchange Act reporting requirements. Rule 0–10 under the Exchange Act defines the term ''small business'' as a company whose total assets on the last day of its most recent fiscal year were $5 million or less.[46] There are approximately 815 reporting companies that have assets of $5 million or less.

Persons who rely on the rules would be required to obtain investors' written or implied consent before householding documents. Investors householded with implied consent must receive a notice 60 days in advance notifying them that their documents will be householded unless the person relying on the rule receives contrary instructions. The rule also requires that if householding is done with investors' implied consent the investors must have the same last name or be reasonably believed to be members of the same family, and the address must be a post office box or a street address reasonably believed to be a residence.

The FRFA states that in adopting the amendments, the Commission considered: (i) The establishment of differing compliance requirements that take into account the resources available to small entities; (ii) simplification of the rule's requirements for small entities; (iii) the use of performance rather than design standards; and (iv) an exemption from the rules for small entities. The FRFA states that we concluded that different requirements for small entities would be inconsistent with investor protection.

The FRFA is available for public inspection in File No. S7–27–97, and a copy may be obtained by contacting Marilyn Mann, Senior Counsel, at (202) 942–0690, Office of Regulatory Policy, Division of Investment Management, Securities and Exchange Commission, 450 5th Street, NW, Washington, DC 20549–0506.

VII. Statutory Authority

The Commission is adopting rule 154 under the authority set forth in section 19(a) of the Securities Act [15 U.S.C. 77s(a)]. The Commission is adopting amendments to rules 30d–1 and 30d–2 under the authority set forth in section 30(e) and 38(a) of the Investment Company Act [15 U.S.C. 80a–29(e) and 80a–37(a)], and amendments to rules 14a–3, 14c–3, and 14c–7 under the authority set forth in sections 12, 14 and 23(a) of the Exchange Act [15 U.S.C. 78*l*, 78n and 78w(a)].

List of Subjects

17 CFR Parts 230 and 270

Investment companies, Reporting and recordkeeping requirements, Securities.

17 CFR Part 240

Reporting and recordkeeping requirements, Securities.

Text of Rules

For the reasons set out in the preamble, Title 17, Chapter II of the Code of Federal Regulations is amended as follows:

PART 230—GENERAL RULES AND REGULATIONS, SECURITIES ACT OF 1933

1. The authority citation for Part 230 continues to read, in part, as follows:

Authority: 15 U.S.C. 77b, 77f, 77g, 77h, 77j, 77r, 77s, 77sss, 78c, 78d, 78*l*, 78m, 78n, 78o, 78w, 78*ll*(d), 79t, 80a–8, 80a–24, 80a–28, 80a–29, 80a–30, and 80a–37, unless otherwise noted.

* * * * *

2. Section 230.154 is added to read as follows:

§ 230.154 Delivery of prospectuses to investors at the same address.

(a) *Delivery of a single prospectus.* If you must deliver a prospectus under the federal securities laws, for purposes of sections 5(b) and 2(a)(10) of the Act (15 U.S.C. 77e(b) and 77b(a)(10)) or § 240.15c2–8(b) of this chapter, you will be considered to have delivered a prospectus to investors who share an address if:

(1) You deliver a prospectus to the shared address;

(2) You address the prospectus to the investors as a group (for example, ''ABC Fund [or Corporation] Shareholders,'' ''Jane Doe and Household,'' ''The Smith Family'') or to each of the investors individually (for example, ''John Doe and Richard Jones''); and

[41] *See* 17 CFR 230.157 (1997). An issuer is considered to be engaged or proposing to engage in ''small business financing'' if it is conducting or proposing to conduct an offering of securities that does not exceed the $5 million limitation prescribed by section 3(b) of the Securities Act. The Commission last year amended certain definitions under the Securities Act, Exchange Act, and Investment Company Act for purposes of the Regulatory Flexibility Act. See Definitions of ''Small Business'' or ''Small Organization'' Under the Investment Company Act of 1940, the Investment Advisers Act of 1940, the Securities Exchange Act of 1934 and the Securities Act of 1933, Securities Act Release No. 7548 (June 24, 1998) [63 FR 35508 (June 30, 1998)]. Because the IRFA for this proposal relied on the earlier definitions (which were broader), the FRFA also relies on the earlier definitions.

[42] *See* 17 CFR 230.251–.263.

[43] *See* 17 CFR 230.157 (1997).

[44] *See* 17 CFR 240.0–10(c)(1) (1997).

[45] *See* CFR 270.0–10 (1997).

[46] *See* CFR 240.0–10 (1997).

(3) The investors consent in writing to delivery of one prospectus.

(b) *Implied consent.* You do not need to obtain written consent from an investor under paragraph (a)(3) of this section if all of the following conditions are met:

(1) The investor has the same last name as the other investors, or you reasonably believe that the investors are members of the same family;

(2) You have sent the investor a notice at least 60 days before you begin to rely on this section concerning delivery of prospectuses to that investor. The notice must be a separate written statement and:

(i) State that only one prospectus will be delivered to the shared address unless you receive contrary instructions;

(ii) Include a toll-free telephone number or be accompanied by a reply form that is pre-addressed with postage provided, that the investor can use to notify you that he or she wishes to receive a separate prospectus;

(iii) State the duration of the consent;

(iv) Explain how an investor can revoke consent;

(v) State that you will begin sending individual copies to an investor within 30 days after you receive revocation of the investor's consent; and

(vi) Contain the following prominent statement, or similar clear and understandable statement, in bold-face type: ''Important Notice Regarding Delivery of Shareholder Documents.'' This statement also must appear on the envelope in which the notice is delivered. Alternatively, if the notice is delivered separately from other communications to investors, this statement may appear either on the notice or on the envelope in which the notice is delivered;

Note: to paragraph (b)(2): The notice should be written in plain English. See § 230.421(d)(2) of this chapter for a discussion of plain English principles.

(3) You have not received the reply form or other notification indicating that the investor wishes to continue to receive an individual copy of the prospectus, within 60 days after you sent the notice; and

(4) You deliver the prospectus to a post office box or to a residential street address. You can assume a street address is a residence unless you have information that indicates it is a business.

(c) *Revocation of consent.* If an investor, orally or in writing, revokes consent to delivery of one prospectus to a shared address (provided under paragraphs (a)(3) or (b) of this section), you must begin sending individual copies to that investor within 30 days after you receive the revocation. If the individual's consent concerns delivery of the prospectus of a registered open-end management investment company, at least once a year you must explain to investors who have consented how they can revoke their consent. The explanation must be reasonably designed to reach these investors.

(d) *Definition of address.* For purposes of this section, *address* means a street address, a post office box number, an electronic mail address, a facsimile telephone number, or other similar destination to which paper or electronic documents are delivered, unless otherwise provided in this section. If you have reason to believe that an address is the street address of a multi-unit building, the address must include the unit number.

(e) *Exclusion of some prospectuses.* This section does not apply to the delivery of a prospectus filed as part of a registration statement on Form N–14 (17 CFR 239.23), Form S–4 (17 CFR 239.25) or Form F–4 (17 CFR 239.34), or to the delivery of any other prospectus in connection with a business combination transaction, exchange offer or reclassification of securities.

PART 240—GENERAL RULES AND REGULATIONS, SECURITIES EXCHANGE ACT OF 1934

3. The authority citation for Part 240 continues to read, in part, as follows:

Authority: 15 U.S.C. 77c, 77d, 77g, 77j, 77s, 77z–2, 77eee, 77ggg, 77nnn, 77sss, 77ttt, 78c, 78d, 78f, 78i, 78j, 78j–1, 78k, 78k–1, 78*l*, 78m, 78n, 78o, 78p, 78q, 78s, 78u–5, 78w, 78x, 78*ll*(d), 78mm, 79q, 79t, 80a–20, 80a–23, 80a–29, 80a–37, 80b–3, 80b–4 and 80b–11, unless otherwise noted.

* * * * *

4. Section 240.14a–3 is amended by revising paragraph (e)(1) and the introductory text of paragraph (e)(2) to read as follows:

§ 240.14a–3 Information to be furnished to security holders.

* * * * *

(e)(1)(i) A registrant will be considered to have delivered an annual report to security holders of record who share an address if:

(A) The registrant delivers an annual report to the shared address;

(B) The registrant addresses the prospectus to the security holders a group (for example, ''ABC Fund [or Corporation] Shareholders,'' ''Jane Doe and Household,'' ''The Smith Family'') or to each of the security holders individually (for example, ''John Doe and Richard Jones''); and

(C) The security holders consent in writing to delivery of one annual report.

(ii) *Implied consent.* The registrant need not obtain written consent from a security holder under paragraph (e)(1)(i)(C) of this section if all of the following conditions are met:

(A) The security holder has the same last name as the other security holders, or the registrant reasonably believes that the security holders are members of the same family;

(B) The registrant has sent the security holder a notice at least 60 days before the registrant begins to rely on this section concerning delivery of annual reports to that security holder. The notice must:

(*1*) Be a separate written statement that is delivered separately from other communications;

(*2*) State that only one annual report will be delivered to the shared address unless the registrant receives contrary instructions;

(*3*) Include a toll-free telephone number or be accompanied by a reply form that is pre-addressed with postage provided, that the security holder can use to notify the registrant that he or she wishes to receive a separate annual report;

(*4*) State the duration of the consent;

(*5*) Explain how a security holder can revoke consent;

(*6*) State that the registrant will begin sending individual copies to a security holder within 30 days after receipt of revocation of the security holder's consent; and

(*7*) Contain the following prominent statement, or similar clear and understandable statement, in bold-face type: ''Important Notice Regarding Delivery of Shareholder Documents.'' Alternatively, this statement may appear on the envelope containing the notice;

Note: to paragraph (e)(1)(ii)(B): The notice should be written in plain English. See § 230.421(d)(2) of this chapter for a discussion of plain English principles.

(C) The registrant has not received the reply form or other notification indicating that the security holder wishes to continue to receive an individual copy of the annual report, within 60 days after the registrant sent the notice; and

(D) The registrant delivers the report to a post office box or to a residential street address. The registrant can assume a street address is a residence unless it has information that indicates it is a business.

(iii) *Revocation of consent.* If a security holder, orally or in writing, revokes consent to delivery of one report to a shared address, the registrant

must begin sending individual copies to that security holder within 30 days after the registrant receives the revocation.

(iv) *Definition of address.* For purposes of this section, *address* means a street address, a post office box number, an electronic mail address, a facsimile telephone number, or other similar destination to which paper or electronic documents are delivered, unless otherwise provided in this section. If the registrant has reason to believe that the address is a street address of a multi-unit building, the address must include the unit number.

(2) Notwithstanding paragraphs (a) and (b) of this section, unless state law requires otherwise, a registrant is not required to send an annual report or proxy statement to a security holder if:

* * * * *

5. In § 240.14c–3, paragraph (c) is added to read as follows:

§ 240.14c–3 Annual report to be furnished security holders.

* * * * *

(c) A registrant will be considered to have delivered an annual report to all security holders of record who share an address if the requirements set forth in § 240.14a–3(e)(1) are satisfied.

6. In § 240.14c–7, Note 2 is removed and Note 3 and Note 4 are redesignated as Note 2 and Note 3.

PART 270—RULES AND REGULATIONS, INVESTMENT COMPANY ACT OF 1940

7. The authority citation for Part 270 continues to read, in part, as follows:

Authority: 15 U.S.C. 80a–1 *et seq.*, 80a–34(d), 80a–37, 80a–39 unless otherwise noted:

* * * * *

8. Section 270.30d–1 is amended by adding paragraph (f) to read as follows:

§ 270.30d–1 Reports to stockholders of management companies.

* * * * *

(f)(1) A company will be considered to have transmitted a report to shareholders who share an address if:

(i) The company transmits a report to the shared address;

(ii) The company addresses the report to the shareholders as a group (for example, ''ABC Fund [or Corporation] Shareholders,'' ''Jane Doe and Household,'' ''The Smith Family'') or to each of the shareholders individually (for example, ''John Doe and Richard Jones''); and

(iii) The shareholders consent in writing to delivery of one report.

(2) The company need not obtain written consent from a shareholder under paragraph (f)(1)(iii) of this section if all of the following conditions are met:

(i) The shareholder has the same last name as the other shareholders, or the company reasonably believes that the shareholders are members of the same family;

(ii) The company has transmitted a notice to the shareholder at least 60 days before the company begins to rely on this section concerning transmission of reports to that shareholder. The notice must be a separate written statement and:

(A) State that only one report will be delivered to the shared address unless the company receives contrary instructions;

(B) Include a toll-free telephone number or be accompanied by a reply form that is pre-addressed with postage provided, that the shareholder can use to notify the company that he or she wishes to receive a separate report;

(C) State the duration of the consent;

(D) Explain how a shareholder can revoke consent;

(E) State that the company will begin sending individual copies to a shareholder within 30 days after the company receives revocation of the shareholder's consent; and

(F) Contain the following prominent statement, or similar clear and understandable statement, in bold-face type: ''Important Notice Regarding Delivery of Shareholder Documents.'' This statement also must appear on the envelope in which the notice is delivered. Alternatively, if the notice is delivered separately from other communications to investors, this statement may appear either on the notice or on the envelope in which the notice is delivered;

Note: to paragraph (f)(2)(ii): The notice should be written in plain English. See § 230.421(d)(2) of this chapter for a discussion of plain English principles.

(iii) The company has not received the reply form or other notification indicating that the shareholder wishes to continue to receive an individual copy of the report, within 60 days after the company sent the notice; and

(iv) The company transmits the report to a post office box or to a residential street address. The company can assume a street address is a residence unless it has information that indicates it is a business.

(3) At least once a year, the company must explain to shareholders who have consented under paragraph (f)(1)(iii) or paragraph (f)(2) of this section how they can revoke their consent. The explanation must be reasonably designed to reach these investors. If a shareholder, orally or in writing, revokes consent to delivery of one report to a shared address, the company must begin sending individual copies to that shareholder within 30 days after the company receives the revocation.

(4) For purposes of this section, *address* means a street address, a post office box number, an electronic mail address, a facsimile telephone number, or other similar destination to which paper or electronic documents are transmitted, unless otherwise provided in this section. If the company has reason to believe that the address is a street address of a multi-unit building, the address must include the unit number.

9. Section 270.30d–2 is revised to read as follows:

§ 270.30d–2 Reports to shareholders of unit investment trusts.

(a) At least semiannually every registered unit investment trust substantially all the assets of which consist of securities issued by a management company must transmit to each shareholder of record (including record holders of periodic payment plan certificates), a report containing all the applicable information and financial statements or their equivalent, required by § 270.30d–1 to be included in reports of the management company for the same fiscal period. Each of these reports must be transmitted within the period allowed the management company by § 270.30d–1 for transmitting reports to its shareholders.

(b) Any report required by this section will be considered transmitted to a shareholder of record if the unit investment trust satisfies the conditions set forth in § 270.30d–1(f) with respect to that shareholder.

Dated: November 4, 1999.

By the Commission.

Margaret H. McFarland,

Deputy Secretary.

[FR Doc. 99–29531 Filed 11–15–99; 8:45 am]

BILLING CODE 8010–01–P

SECURITIES AND EXCHANGE COMMISSION

17 CFR Parts 230 and 240

[Release Nos. 33–7767, 34–42102, IC–24124; File No. S7–26–99]

RIN 3235–AH66

Delivery of Proxy and Information Statements to Households

AGENCY: Securities and Exchange Commission.

ACTION: Proposed rule.

SUMMARY: The Commission is proposing for public comment amendments to the proxy rules under the Securities Exchange Act of 1934. The proposed amendments would permit companies and other persons to satisfy the proxy and information statement delivery requirements, with respect to two or more shareholders sharing the same address, by sending or forwarding a single proxy or information statement to these shareholders (''householding''). The proposed amendments are intended to reduce the amount of duplicative information that shareholders receive, and to lower printing and mailing costs to registrants that ultimately are borne by the shareholders. In a separate release, the Commission is adopting similar amendments to Commission rules that govern the delivery of annual and (in the case of investment companies) semiannual reports and new Rule 154 under the Securities Act of 1933 that permits issuers and broker-dealers to household prospectuses. This release proposes changes to Rule 154 and to the annual report requirements.

DATES: Comments must be received on or before January 18, 2000.

ADDRESSES: Comments should be submitted in triplicate to Jonathan G. Katz, Secretary, Securities and Exchange Commission, 450 5th Street, NW, Washington, DC 20549–0609. Comments also may be submitted electronically at the following E-mail address: rule-comments@sec.gov. All comment letters should refer to File No. S7–26–99; this file number should be included on the subject line if E-mail is used. Comment letters will be available for public inspection and copying in the Commission's Public Reference Room, 450 5th Street, NW, Washington, DC 20549. Electronically submitted comment letters also will be posted on the Commission's Internet web site (http://www.sec.gov).

FOR FURTHER INFORMATION CONTACT: Elizabeth M. Murphy, Special Counsel, at (202) 942–2900, Office of Chief Counsel, Division of Corporation Finance, Securities and Exchange Commission, 450 5th Street, NW, Washington, DC 20549.

SUPPLEMENTARY INFORMATION: The Commission today proposes amendments to Rule 154 [1] under the Securities Act of 1933 (the ''Securities Act'') [2] and Rules 14a–2,[3] 14a–3,[4] 14a–7,[5] 14b–1,[6] 14b–2,[7] and 14c–3 [8] under the Securities Exchange Act of 1934 (the ''Exchange Act'').[9]

I. Introduction

The Commission proposes amendments to the proxy rules to reduce the amount of duplicative information shareholders receive. The proposal was prompted by amendments the Commission is adopting today in a Companion Release.[10] In the Companion Release, the Commission is adopting new Securities Act Rule 154 to enable issuers and broker-dealers to satisfy prospectus delivery requirements for two or more investors sharing the same address by sending a single prospectus.[11] The Commission also is adopting similar amendments to the proxy rules under the Exchange Act that govern the delivery of annual reports to shareholders, and to the rules under the Investment Company Act that govern the delivery of semiannual reports to investment company investors.[12]

The purpose of the amendments to the proxy rules adopted today is to conform the provisions regarding the householding of annual reports by companies to the amendments that permit the householding of prospectuses and investment company semiannual reports. Companies are required to send an annual report to security holders in connection with the delivery of a proxy or information statement when directors are being elected.[13] For many years, the proxy rules have included provisions stating that companies do not have to send an annual report to a shareholder of record having the same address as another shareholder of record to whom a report is sent if the shareholder provides written consent.

With respect to prospectuses and annual reports, the Commission originally proposed to limit householding without written consent to situations in which shareholders had opened their accounts before the effective date of the new rules.[14] Several commenters asserted that the proposed distinction between shareholders who must give written consent to householding and those who need not would be costly and burdensome to administer. They also stated that the distinction could confuse shareholders.

Under the amendments the Commission is adopting today, the rules no longer require companies to get written consent from shareholders to householding of prospectuses, annual reports and semiannual reports if: (1) The document is delivered to members of the same family with the same last name sharing a common home address or post office box; (2) shareholders are given advance notice of householding; and (3) shareholders do not object to householding.

The Commission did not propose to permit householding of proxy and information statements when it proposed the householding provisions adopted today. Several commenters on the proposed amendments suggested that the Commission consider further revisions to permit the householding of proxy materials. Many of these commenters noted that householding would facilitate companies' common practice of mailing the annual report together with the proxy or information statement. A few commenters further suggested that the Commission extend the proposed householding provisions expressly to permit broker-dealers and banks [15] (''intermediaries'') to household delivery of annual reports and proxy and information statements to beneficial owners of equity securities registered pursuant to Section 12 of the Exchange Act.[16] The proxy rules currently do not include provisions that

[1] 17 CFR 230.154.

[2] 15 U.S.C. 77.

[3] 17 CFR 240.14a–2.

[4] 17 CFR 240.14a–3.

[5] 17 CFR 240.14a–7.

[6] 17 CFR 240.14b–1.

[7] 17 CFR 240.14b–2.

[8] 17 CFR 240.14c–3.

[9] 15 U.S.C. 78a.

[10] Release No. 33–7766 (Nov. 4, 1999).

[11] Rule 154 also applies to prospectus supplements.

[12] Revised Rules 30d–1 [17 CFR 270.30d–1], 30d–2 [17 CFR 270.30d–2], 14a–3 and 14c–3.

[13] Rule 14a–3(a) [17 CFR 240.14a–3(a)].

[14] Release No. 33–7475 (''Proposing Release'') (Nov. 13, 1997) [62 FR 61933]. The Commission proposed to allow householding to existing shareholders as of the effective date of the new rules without written consent, due to a concern that many shareholders, while not objecting to householding, would fail to respond to requests for consent.

[15] Rule 14b–2(a)(1) [17 CFR 240.14b–2(a)(1)] defines the term ''bank'' as a bank, association, or other entity that exercises fiduciary powers.

[16] The proxy rules apply only to companies with equity securities registered under Section 12 of the Exchange Act and to investment companies registered under the Investment Company Act of 1940 (''Investment Company Act'') [15 U.S.C. 80a] [17 CFR 270.20a–1].

permit intermediaries to household documents.

In light of the commentary on the Proposing Release, the Commission proposes in this release to amend the proxy rules further to permit the householding of proxy and information statements by companies.[17] The Commission also proposes, for the first time, to add provisions to the proxy rules to permit intermediaries to household proxy and information statements, as well as annual reports, to beneficial shareholders. However, multiple proxy cards or voting instruction forms—one for each shareholder residing at a shared address—would have to be delivered with proxy statements that are householded. Rule 154, as adopted, does not permit the householding of combination proxy statement-prospectuses delivered for business combinations, exchange offers, or reclassifications of securities registered on Forms N–14, S–4 and F–4.[18] Accordingly, the Commission now is proposing to amend Rule 154 to permit the householding of proxy statements combined with prospectuses, as discussed more fully below.

II. Discussion—Delivery of Proxy and Information Statements to a Household

A. Purpose of the Proposed Amendments

The Commission is proposing amendments to Exchange Act Rules 14a–3, 14b–1, 14b–2 and 14c–3 to permit companies and intermediaries to satisfy their respective proxy and information statement delivery requirements by sending a single copy of the proxy or information statement to two or more shareholders[19] residing at the same address. Companies, intermediaries and shareholders have complained to the Commission in the past that the distribution of multiple copies of the same document to shareholders who share the same address often inundates shareholders with unwanted mail and causes companies to incur higher printing and mailing costs. The purpose of the proposed amendments is to allow companies and intermediaries to household proxy and information statements to both record and beneficial shareholders in the same manner that, upon effectiveness of the Companion Release, will be permissible for prospectuses and annual reports to security holders.

B. Proposed Householding of Proxy and Information Statements by Companies to Record Holders

Exchange Act Rule 14a–3 requires companies to furnish their shareholders with a proxy statement before soliciting proxy voting authority from the shareholders with respect to a matter submitted to a shareholder vote.[20] If the solicitation relates to an annual meeting (or special meeting in lieu of the annual meeting) where directors are being elected, a company's proxy statement must be preceded or accompanied by an annual report to security holders that includes specified financial information about the company.[21] Companies are able to deliver the proxy statement directly only to their shareholders of record; they must deliver the proxy statement to their beneficial shareholders indirectly through the intermediaries.[22]

Pursuant to amendments adopted today in the Companion Release, Rule 14a–3 will permit companies to household the annual report to security holders under certain conditions. Because the current proxy rules require the annual report to accompany or precede delivery of the proxy statement, companies generally mail the annual report with the proxy statement in the same envelope.[23] As a result, the ability of companies to reduce costs by householding the annual report would be limited by their inability also to household the proxy statement.

The proposed revisions to Rule 14a–3 would permit companies to household the proxy statement to record shareholders under the same conditions for householding prospectuses and annual reports.[24] Specifically, as described in more detail below, the amendments would require the company to:

- Get written or implied consent from record shareholders to householding of the proxy statement;
- Include a separate proxy card for each shareholder to whom the householded proxy statement is sent;
- Expressly undertake in the proxy or information statement to deliver upon written or oral request a separate copy of the annual report and proxy or information statement to a record shareholder residing at a shared address to which the company delivers a householded copy of each document; and
- Resume delivery of individual copies of the proxy statement within 30 days after a shareholder request (i.e., revocation of any written or implied consent).

The Commission proposes similar amendments to Rule 14c–3, which requires companies to deliver information statements to shareholders when they are taking certain corporate actions, but not soliciting proxy voting authority. Comment is solicited generally as to whether companies should be permitted to household proxy and information statements.

1. Consent

a. Implied Consent. Under the proposed changes to the proxy rules,[25] companies would be able to deliver a single proxy or information statement to multiple shareholders who share an address without having affirmatively to obtain written consent to householding from the shareholders, if the following conditions are met:

- Each shareholder at the shared address has the same last name as the other shareholders (or the company

[17] References to ''companies'' throughout this release include investment companies. Funds are not required to comply with the Rule 14a–3(b) annual report requirement because they file shareholder reports under Section 30(d) of the Investment Company Act. Item 22 of Exchange Act Schedule 14A [17 CFR 240.14a–101] consolidates fund-specific proxy disclosure requirements, and requires that, unless the proxy statement is accompanied by a copy of the fund's most recent annual report, the proxy statement must state prominently that the fund will furnish without charge a copy of the annual report and the most recent semi-annual report succeeding the annual report, if any, to a shareholder upon request.

[18] See 17 CFR 239.23, .25, .34.

[19] Companies are permitted to household annual reports and proxy or information statements to a single shareholder holding the same securities in two or more accounts with the same address without having to comply with the householding provisions that have been adopted (with respect to annual reports) or that are being proposed (with respect to proxy and information statements). This also is true when a shareholder is acting as custodian for securities: (1) In an account created under a state Uniform Gilfts to Minors Act (''UGMA'') or Uniform Transfers to Minors Act (''UTMA'') and the shareholder also holds the same security in his or her own account, with the same address; or (2) in two or more accounts created under a state UGMA or UTMA. The Companion Release states similarly that the delivery of a single prospectus or shareholder report under these circumstances meets the prospectus delivery requirements of the Securities Act. *See* Companion Release, *supra* note 10, at n.6.

[20] Rule 14a–3(a).

[21] Rule 14a–3(b) [17 CFR 240.14a–3(b)].

[22] In Release 33–7607 (Nov. 11, 1998) [67 FR 67331)], the Commission solicited comment on whether it should revise the proxy rules to permit the optional direct delivery of proxy materials to non-objecting beneficial owners by companies.

[23] Some companies have chosen to deliver proxy statements and annual reports in electronic rather than paper format pursuant to procedures set out in Release Nos. 33–7233 (Oct. 6, 1995) [60 FR 53548] and 33–7288 (May 9, 1996) [61 FR 24644]. Section II.B.2 of this release discusses householding of electronic documents.

[24] Companies also would be able to household other proxy soliciting material, such as additional or revised proxy materials mailed after the proxy statement was sent to shareholders.

[25] Proposed Rule 14a–3(e)(1)(ii).

reasonably believes that they all are members of the same family);[26]

- At least 90 days before beginning delivery by householding, the company sends each record shareholder at the shared address a separate written notice in plain English[27] of its intention to household proxy and information statements;[28]
- The notice (or envelope containing the notice) includes the following prominent statement, or similar clear and understandable statement, in bold-face type: ''Important Notice Regarding Delivery of Shareholder Documents'';[30]
- The written notice provides record shareholders who object to householding with a reply form or toll-free telephone number to express their objection;[31]
- The written notice states the duration of the consent and explains how a shareholder can revoke consent to householding;[32]
- The company does not receive notice that the shareholders object to householding within the 90-day notice period;[33] and
- The company delivers householded proxy or information statements only to a residential street address or post office box.[34]

The rules being adopted today in the Companion Release that permit householding of prospectuses and annual reports by implied consent state that shareholders must receive written notice of the company's plan to household these documents at least 60 days before householding begins. The Commission is proposing to change the 60-day notice requirement to 90 days with respect to annual reports, and proposes a 90-day period for proxy and information statements. The additional time may be necessary to avoid interfering with the company's proxy statement mailing schedule—because many companies mail the proxy statement 45 days or more before the annual meeting date, a 60-day period may not provide sufficient time for the mailing of the notice and receipt of any shareholder objections before the planned mailing date.[35]

The Commission requests comment on whether the proposed conditions for relying on implied consent are necessary or appropriate. Should the rules require companies to get written consent to householding of proxy and information statements from members of the same family with the same last name, even though the Commission today is adopting amendments that allow householding of prospectuses and annual reports by implied consent? Should proxy statements be treated differently than information statements? Conversely, should companies be able to household proxy and information statements by implied consent to unrelated shareholders residing at a shared address? Do companies have the means reasonably to determine whether shareholders who do not share the same last name (for example, spouses with different surnames) are related to one another? Is joint account and beneficiary information useful in this regard?[36]

The Commission also solicits comment on whether, as proposed, companies should have to send record shareholders a separate written notice of their intention to household proxy and information statements by implied consent. Should companies be able to incorporate the notice into an unrelated shareholder communication such as an interim report or dividend check statement[37] Should the rules require that the separate notice also be mailed separately, or should the rules permit delivery with other investor materials, as the Commission's rules will now permit for prospectuses and investment company semiannual reports[38] Is 90 days an appropriate notice period, or should it be shorter or longer? Furthermore, are the proposed means by which a shareholder can object to householding appropriate? Should the rules include alternative methods by which shareholders could object?

Commenters should note that, under the proposed rules, companies would have to specify in the required written notice the types of documents they intend to household (*i.e.*, proxy and information statements). New Securities Act Rule 154 and revised Rule 14a–3(e) adopted today in the Companion Release similarly require the written notice to specify a company's intention to household prospectuses and annual reports, respectively. Therefore, companies choosing to household all of these documents (prospectuses, annual reports and proxy and information statements) may wish to consider mailing the householding notice after the Commission has considered the revisions proposed in this release. Otherwise, companies would need to mail two separate notices—one regarding an intention to household prospectuses and/or annual reports upon effectiveness of the amendments in the Companion Release and a second regarding an intention to household proxy and information statements. The second notice could not be delivered until the effective date of the proposed changes described in this release.

b. Affirmative Written Consent. A company also would be permitted to household the proxy or information statement to related or unrelated record shareholders residing at a shared address if each of the shareholders consents in writing to the company's

[26] Proposed Rule 14a–3(e)(1)(ii)(A). Some commenters on the householding proposals adopted in the Companion Release expressed concern about the ability to discern whether certain shareholders residing at the same address are members of the same family (*e.g.*, a husband and wife with different surnames). The Commission believes that companies relying on the rule may, in many cases, be able to base their reasonable belief on information already provided by the shareholder (*e.g.*, in an account agreement).

[27] Proposed Rule 14a–3(e)(1)(ii)(B) includes a note stating that the notice should be written in plain English. The proposed rule refers to Securities Act Rule 421(d)(2) [17 CFR 230.421(d)(2)]. Rule 421(d)(2) states that language must ''substantially comply'' with the following principles: (i) Short sentences; (ii) definite, concrete, everyday words; (iii) active voice; (iv) tabular presentation or bullet lists for complex material, whenever possible; (v) no legal jargon or highly technical terms; and (vi) no multiple negatives.

[28] The proposed notice could not be sent in the same envelope with other written material, such as an account statement, dividend check or shareholder report; under proposed Rule 14a–3(e)(1)(ii)(B)(l), it would have to be delivered separately from other communications and could not be incorporated into other material. In most cases, it is expected that companies would mail a single notice regarding its intention to household annual reports as well as proxy and information statements.

[30] Proposed Rule 14a–3(e)(1)(ii)(B)(*7*). This statement may be more effective in alerting shareholders if it appears on the envelope.

[31] Proposed Rule 14a–3(e)(1)(ii)(B)(*3*). In addition to providing a reply form or toll-free telephone number, the notice also may provide supplemental methods of opting out of householding, such as sending the reply form to a facsimile telephone number or responding by e-mail. Reply forms to be returned by mail must be pre-addressed and returnable by business reply mail or by another method in which the person relying on the rule pays the postage.

[32] Proposed Rule 14a–3(e)(1)(ii)(B)(*4*) and (*5*).

[33] Proposed Rule 14a–3(e)(1)(ii)(C). If the company receives notice that one or more shareholders objects to householding within the 90-day notice period, but there are two or more shareholders in the household who do not object, the company would be able to household to the non-objecting shareholders.

[34] Proposed Rule 14a–3(e)(1)(ii)(D).

[35] A 60-day notice period also could interfere with the time frames set forth in the shareholder communications rules regarding the delivery of proxy materials to beneficial owners. Rule 14a–13 [17 CFR 240.14a–13] requires companies to request the number of sets of materials needed by intermediaries for delivery to beneficial owners 20 business days before the company's record date. The number of sets of material needed by the intermediary will be affected by the number of shareholders receiving householded documents. The record date frequently is set at a date 60 days before the meeting date pursuant to state law requirements.

[36] See Companion Release, *supra* note 10, at n.17 and accompanying text.

[37] *Id.* at n.18.

[38] *Id.* at n.28.

delivery of one proxy or information statement to the shared address.[39]

If a company solicits written consent from related or unrelated record shareholders residing at a shared address, it should specify in the request for consent the types of documents it intends to household (*e.g.*, annual reports and/or proxy statements and/or information statements), the duration of the consent, the procedure to revoke consent, and the anticipated date that householding will begin. The company could begin householding immediately upon receipt of the written consent. If a shareholder, on his or her own initiative, requests the company to household the proxy or information statement, a company that is agreeable to the request should send a confirmation to the shareholder including the information described above.

Comment is solicited as to whether unrelated shareholders residing at a single address should have to provide written consent to householding. If so, should they be allowed to consent orally as well as in writing? If oral consent is permitted, what kind of documentation should the Commission require companies to retain as evidence of consent?

c. Duration of Consent. Companies could solicit from record shareholders a consent to householding of perpetual duration that is valid until revoked, or a consent of limited duration such as one year or a specified number of years. If companies rely on implied consent to householding, the required 90-day notice to shareholders should make it clear whether the company intends to household indefinitely or for a fixed period.[40] The Commission requests comment on whether companies should have to re-solicit implied and/or written consent to householding periodically, and if so, whether they should have to do so annually or at a different interval.[41]

Under the proposed rules, shareholders could revoke their consent to householding at any time, by instructing the company orally or in writing.[42] A company could not continue to household the proxy or information statement more than 30 days after receiving such instructions. Comment is solicited as to whether 30 days is an appropriate revocation period from the perspective of both companies and shareholders, or should be shorter or longer.

2. Addressing

Under the revised rules, companies would have the flexibility to address the householded copy of the proxy or information statement either to shareholders as a group, (*e.g.*, ''ABC Corporation Shareholders,'' ''Jane Doe and Household'' or ''Household of Jane Doe''), or to each of the shareholders residing at the shared address (*e.g.*, ''Jane Doe and Mary Doe''). In order to prevent householding of the proxy or information statement to shareholders with the same last name who share a business address but are not related, the proposed rules would require companies relying on implied consent to deliver the proxy or information statement to a residential street address, or to a post office box. The rules would state that a company can assume that a street address is a residence unless the company has information indicating that the address is not a residence.

For purposes of the revised rules, the term ''address'' would mean a street address, post office box number, an electronic mail address, facsimile telephone number, or similar destination to which paper or electronic documents are delivered. If a company has reason to believe that an address is a street address of a multi-unit building, the address also would have to include the unit number.

Because the potential benefits of householding electronic documents appear to be minimal,[43] the Commission is not proposing to allow electronic delivery of householded proxy and information statements in connection with implied consent to householding. The proposed rules would permit electronic delivery of householded proxy and information statements only if delivery is made to a shared electronic address (for example, a shared electronic mail account) and all shareholders in the household give written consent to householding.[45] Comment is requested on whether the Commission should permit the electronic delivery of a householded proxy or information statement if all of the shareholders in the household have consented to householding but not all have consented to electronic delivery pursuant to procedures outlined in Commission releases.[46]

Comment is solicited on the proposed address requirements. Should companies have the proposed flexibility to address householded proxy and information statements to a group of shareholders? Should shareholders have the right to specify how the householded proxy or information statement is addressed? Should companies be able to address householded annual reports, proxy statements and information statements to only one of the shareholders residing at a shared address?

Is the requirement that companies deliver the householded proxy or information statement only to addresses reasonably believed to be residences workable? Is the proposed definition of ''address'' appropriate? Would householding to a shared electronic address result in significant cost savings?

3. Inclusion of Multiple Proxy Cards With Single Proxy Statement

Unlike prospectuses, annual reports and information statements, the proxy statement is accompanied by a form of proxy (''proxy card''). Rule 14a-4(f)[47] states that no person conducting a proxy solicitation shall deliver a proxy card to a shareholder unless it is preceded or accompanied by a definitive proxy statement that has been filed with, or mailed for filing to, the Commission. Therefore, shareholders generally receive the proxy card in the same envelope that contains the company's proxy statement and annual report. Proxy cards are addressed based on the shareholder account titles appearing on a company's list of registered holders.

Under the proposed rules, companies would need to continue sending a separate proxy card with the householded proxy statement for each separate shareholder account with respect to which proxy authority is

[39] In order to satisfy the written consent requirement, a shareholder would need to consent specifically to householding of proxy and information statements.

[40] Proposed Rule 14a-3(e)(1)(ii)(B)(*4*).

[41] Even if a company solicits ''perpetual'' consent to householding, if the company chooses to household its materials to all of its shareholders, it will have to solicit consent from new shareholders as they open their accounts or on an annual basis.

[42] Proposed Rule 14a-3(e)(1)(iii).

[43] None of the commenters on the Proposing Release stated that householding electronically delivered documents would save money, or that investors had been requesting this form of delivery. Several commenters noted the difficulty of permitting electronic delivery of householded documents. One individual shareholder emphasized the risks involved in using electronic delivery, especially the ease with which electronic messages might be deleted by accident and the difficulty of forwarding messages from a discontinued e-mail account with an Internet provider. Furthermore, the cost of sending an electronic document or e-mail generally is very low, and therefore, sending one e-mail to a household rather than multiple e-mails would not result in significant cost savings.

[45] *See* Rule 14(a)(3)(e)(1)(ii)(D). One of the provisions pertaining to householding by implied consent requires delivery to a street address. All of the shareholders in the household would have to provide written consent to both electronic delivery and householding.

[46] *See* note 23.

[47] 17 CFR 240.14a–4(f).

being solicited. For example, if a husband and wife each holds the same company's securities in two individual accounts, a company could deliver a single proxy statement and annual report to them but would have to include two separate proxy cards in the envelope, and designate the proxy cards individually based on the two account titles. Comment is solicited on whether the Commission should permit householding of proxy statements in view of the need to include multiple proxy cards. Are there concerns that householding may interfere with shareholders' exercise of voting rights through the proxy card's execution?

4. Undertaking to Provide Additional Copies of Householded Documents

The proposed rules[48] would require companies to undertake in the proxy or information statement to deliver, upon written or oral request, a separate copy of the annual report, proxy statement or information statement to a shareholder residing at a shared address to which a householded copy of the documents was delivered. The company would have to deliver the separate copy promptly after a shareholder request.

The purpose of this proposed requirement is to ensure that a shareholder who has given implied or written consent to householding, but then experiences a change in circumstances that makes sharing a householded document impractical, still has access to the annual report, proxy statement or information statement. The householding rules applicable to annual reports adopted today in the Companion Release do not include this undertaking requirement. The proposed amendments would modify those rules.

Comment is solicited as to whether the proposed undertaking is appropriate, and if so, whether the rules should mandate delivery of a separate copy of the annual report, proxy statement or information statement within a specific time period rather than promptly. Should companies have to set forth the proposed undertaking in the proxy or information statement, or should there be other alternatives? Comment also is requested on whether Securities Act Rule 154 adopted today in the Companion Release should be revised to include a similar undertaking. The proposed rules also would require companies choosing to household the annual report,[49] proxy statement and/or information statement to include the following information in the proxy or information statement:[50]

- State that only one annual report and/or proxy statement or information statement is being delivered to multiple shareholders residing at a shared address unless the registrant has received contrary instructions from one or more of the shareholders;
- Undertake to deliver promptly, upon written or oral request, a separate copy of the annual report and/or proxy statement or information statement to a shareholder residing at a shared address to which a single copy of the documents was delivered;
- Provide instructions as to how a shareholder can notify the registrant that the shareholder wishes to receive a separate annual report and/or proxy statement or information statement in the future; and
- Provide instructions as to how shareholders can request householding if they are receiving multiple copies of the annual report and/or proxy or information statement.

Comment is solicited on whether registrants should be required to provide annual disclosure about householding, as proposed. If so, should this disclosure have to appear in the proxy or information statement or could it be provided in other shareholder communications?

5. State Law Requirements Concerning Notice of Meeting

Many state corporate codes contain provisions requiring companies to provide shareholders of record with written notices of meetings and adjourned meetings. The provisions generally state that written notice of a meeting at which shareholders are required or permitted to take action must be sent to each shareholder of record a specified number of days before the meeting date. For example, the Delaware General Corporate Code states that written notice of any meeting shall be given not less than 10 nor more than 60 days before the date of the meeting to each shareholder entitled to vote at the meeting.[51] This notice typically is transmitted with the proxy statement.

It is unclear whether a householded proxy statement that includes the meeting notice would satisfy state law requirements that companies deliver a notice to *each* record shareholder. Companies choosing to household the proxy statement therefore would have to consider the possible need to deliver separately the notice of meeting to each shareholder in the household to satisfy state law requirements.

Comment is solicited on whether state law meeting notice requirements present legal and/or practical obstacles to householding of the proxy statement. Would a meeting notice incorporated in a single, householded proxy statement sent to all record holders residing at a shared address be deemed to be delivered to each such shareholder in the household in compliance with applicable state law? Would the householded proxy statement have to be addressed to each shareholder rather than generically to the group of shareholders residing at a shared address in order to satisfy state law? Would the attachment of multiple meeting notices to the householded proxy statement, each notice addressed to each shareholder sharing the address, fulfill the states' individual meeting notice requirements, or must a notice be sent separately to each record shareholder?

6. Business Combination Proxy Statement-Prospectuses

As discussed in the Companion Release, new Securities Act Rule 154 does not permit the householding of prospectuses required to be delivered in connection with business combination transactions, exchange offers and reclassifications of securities.[52] The Proposing Release requested comment on whether companies should be permitted to household those types of prospectuses, given that they generally are accompanied by proxy cards or tender offer material that must be executed by each shareholder. Some commenters on the Proposing Release suggested that the Commission consider broadening Rule 154 to permit householding of those types of prospectuses.

Upon consideration of these comments, and because the proposals described in this release would permit the householding of proxy statements, the Commission is proposing to expand the coverage of Rule 154 to include combined proxy statement-prospectuses delivered in connection with business combinations, exchange offers or reclassifications of securities.

Companies householding the combined proxy statement-prospectuses would continue to have to include

[48] Proposed Rule 14a-3(e)(1)(i)(E) and proposed Item 22 of Schedule 14A.

[49] The proposed proxy disclosure requirement is not included in the provisions permitting householding of the annual report adopted today in the Companion Release.

[50] Proposed Item 23 of Schedule 14A and proposed Item 5 of Schedule 14C.

[51] 8 Del. C. Section 222 (1998).

[52] Rule 154 does not apply to the delivery of a prospectus filed as part of a registration statement on Form N–14, S–4 or F–4, or to the delivery of any other prospectus in connection with a business combination transaction, exchange offer or reclassification of securities. See Rule 154(e) (17 CFR 230.154(e)).

separate proxy cards that need to be executed by each individual shareholder in the household. Comment is solicited as to whether the Commission should permit companies to household combined proxy statement-prospectuses. Do shareholders perceive these prospectuses about extraordinary transactions as being more significant than proxy statements relating to routine proposals? If so, are they more likely to want to receive separate copies of the combined proxy statement-prospectus? If the revised rules do not permit companies to household combined proxy statement-prospectuses, do companies have the means to suppress householding when delivering this type of document to shareholders?

The revised rule would not affect any other applicable requirement of state or federal law concerning the delivery of any document that requires individual execution, such as a shareholder response to a tender offer. Comment is solicited on whether the Commission should permit householding of these documents.

C. Householding of Proxy and Information Statements by Intermediaries to Beneficial Owners

Exchange Act Rule 14b–1 sets forth the obligations of registered brokers and dealers in connection with the prompt forwarding of certain registrant communications to beneficial owners. Rule 14b–2 sets forth similar obligations of banks, associations and other entities that exercise fiduciary powers. The proposed amendments would revise these rules to state that broker and bank intermediaries may, on their own initiative, or at the request of a company, household the annual report, proxy statement or information statement to beneficial owners residing at a shared address if the requirements set forth in proposed Rule 14a–3(e)(1) (with respect to annual reports and proxy statements) and Rule 14c–3(c) (with respect to information statements) are met. Pursuant to the proposed change discussed above, intermediaries also would be able to household combined proxy statement-prospectuses to beneficial owners.

Under the proposed amendments, the intermediaries rather than the registrant would follow the procedures described in proposed Rule 14a–3(e)(1) and obtain implied or written consent to householding from beneficial owners.[53] Intermediaries using voting instruction forms to elicit information from beneficial owners as to how their shares should be voted would have to include a separate form for each beneficial owner residing at a shared address.[54] This would be similar to the requirement that registrants must include a separate proxy card for each individual record holder residing at a shared address.

Under the current proxy rules,[55] intermediaries are not required to promptly forward information to beneficial shareholders if a company does not provide assurance of reasonable reimbursement of the intermediaries' reasonable expenses, both direct and indirect, incurred in performing those obligations. The proxy rules do not include a schedule of ''reasonable fees,'' but the NYSE rules and rules of other self-regulatory organizations do include a fee schedule. NYSE Rule 451 sets forth the maximum fees that NYSE member firms (brokers) may charge NYSE listed companies for forwarding proxy materials to beneficial owners.

In December 1996, the NYSE proposed a new reimbursement fee structure for the forwarding of proxy materials and other shareholder communications.[56] Public comment was solicited on the proposals. The Commission approved the fees on a pilot basis (''pilot fees'').[57] The pilot fees have been revised several times and currently are set to expire on January 3, 2000.[58]

In addition to per piece processing fees for the forwarding of proxy materials and other shareholder communications, the pilot fees include a ''paper and postage elimination fee'' [59] which may be charged by intermediaries for the elimination of a paper mailing to a beneficial owner as a result of householding or electronic delivery. Nearly all large broker and many bank intermediaries currently outsource the proxy material distribution function for beneficial shareholders to ADP Investor Communications Services (''ADP''). ADP, as agent for intermediaries, is able to charge companies for the proxy distribution services in accordance with the pilot fees, including the paper and postage elimination fee.

Under the proposed rules, intermediaries or their agents could offer shareholders the option of consenting—on an implied or written consent basis—to householding of proxy and information statements relating only to a particular company, or consenting to householding of any proxy or information statement the intermediary is required to forward to the shareholder. The proposed rules, however, would not require that shareholders be given this option of limiting their consent to a particular company. Comment is solicited on whether shareholders should have the option to limit their consent to a particular company.

The revised rules would state that intermediaries must exclude annual reports, proxy statements, and information statements that will be eliminated pursuant to householding procedures in responding to company requests concerning the number of the intermediaries' customers that are beneficial owners of the companies' securities.[60]

Comment is requested on whether intermediaries should be allowed to household annual reports, proxy statements, and information statements to beneficial owners. If so, should they or their agents be allowed to household regardless of whether the company chooses to household to its record holders? Should companies be required to reimburse intermediaries or their agents for their reasonable expenses incurred in obtaining implied or written consents to householding even if the company has not directed or approved the intermediary's decision to household? Should the intermediaries be required to obtain express authorization from companies before they begin householding? Conversely, should the rules require intermediaries to household to beneficial owners at the direction of companies? If so, should the companies be required to compensate the intermediaries for their reasonable expenses incurred in connection with the solicitation of implied or written consents? Is it reasonable for intermediaries (or their agent) to collect the $.50 paper and postage elimination

[53] A signature on a new bank or broker-dealer account agreement would not satisfy the written consent requirement if the agreement merely refers to or incorporates by reference another document, such as the proxy or information statement, and does not describe the householding procedures.

[54] Intermediaries generally use voting instruction forms rather than the proxy card to facilitate automated processing of the beneficial owners' voting instructions regarding non-routine matters. The voting instruction forms contain the same information as the proxy card with respect to the items presented for shareholder vote. Once the intermediary tabulates the results from the voting instruction forms, it executes the proxy card in its own name and returns it to the company or the company's designated agent.

[55] Rules 14b–1(c)(2) and 14b–2(c)(2) [17 CFR 240.14b–1(c)(2) and 240.14b–2(c)(2)].

[56] Release 34–38058 (Dec. 18, 1996) [61 FR 68082].

[57] Release 34–38406 (Mar. 14, 1997)[62 FR 13922].

[58] Release 34–42086 (Nov. 1, 1999).

[59] The intermediary is entitled to collect $.50 for each set of proxy materials eliminated.

[60] Proposed Rules 14b–1(c)(3) and 14b–2(c)(4).

fee currently included in the pilot fees for each paper copy of a set of proxy materials suppressed as a result of householding at the intermediary level? Should the $.50 postage elimination fee be a one-time charge (assessed only the first time a paper copy is suppressed) or a recurrent fee? Is there any reason why the rules permitting householding by intermediaries to beneficial shareholders should differ from the rules permitting householding by companies to record shareholders?

Commenters also are asked to consider whether the rules should permit householding to record shareholders and beneficial shareholders sharing the same address. How would information about record shareholders (possessed by companies or their agents) and information about beneficial shareholders (possessed by intermediaries or their agents) be shared to facilitate householding?

The proposed rules also would amend Rule 14a–2(a)(1),[61] which excepts solicitations by intermediaries from Rules 14a–3 through 14a–15 if they satisfy certain conditions.[62] The amendments would revise the rule to indicate that the exception permits intermediaries' delivery of materials to each person separately or to a person's household.

D. Householding of Proxy Statements by Shareholders

Under the proposed rules,[63] shareholders who deliver a proxy statement to other shareholders also would be able to household the proxy statement to record holders if the company previously has obtained shareholder consent to householding in accordance with the procedures in proposed Rule 14a–3(e)(1).

Rule 14a–7 sets forth the obligations of companies either to provide a shareholder list to a requesting shareholder or to mail the shareholder's proxy materials. The rule provides that the company has the option to provide the list or mail the shareholder's materials, except when the company is soliciting proxies in connection with going private or roll-up transactions. In those cases, the shareholder has the option to request the list or have the company mail its materials. In addition to requiring that the company supply householding information that it previously has obtained when providing the shareholder list, the proposed amendments would require companies to share the benefit of written or implied consents to householding that they have obtained when mailing materials on a shareholder's behalf.[64] Comment is solicited on whether shareholders should be able to household the proxy statement under the specified conditions.

The Commission is aware that intermediaries generally deliver proxy materials on behalf of soliciting parties other than the registrant under the conditions set forth in Exchange Act Rules 14b–1 and 14b–2 (for example, the soliciting party agrees to reimburse the intermediary for reasonable expenses incurred by the intermediary to forward the proxy statement to beneficial owners even though these rules are silent with respect to any such obligations). Should Rules 14b–1 and 14b–2 be revised explicitly to require intermediaries to deliver proxy or other soliciting materials on behalf of soliciting persons (or their agents) other than the registrant? Are such revisions necessary or appropriate even if the householding proposals are not adopted?

III. Delivery of Proxy Materials to Registered Investment Advisers and Investment Managers

Many of the Self-Regulatory Organizations (''SROs'') have adopted rules to allow beneficial owners to:

- Designate a registered investment adviser to vote proxies and receive proxy material on behalf of the beneficial owner; and
- Allow SRO member organizations who serve as investment managers of ERISA plans to vote proxies.[65]

The proposed householding rules do not include any specific provisions regarding householding of proxy materials to registered investment advisers and investment managers of ERISA plans who have been designated to vote proxies and receive proxy materials on behalf of multiple shareholder accounts. The general provisions of the rules, however, would permit companies to solicit written consent to householding from these investment advisers and investment managers. The proposed rules also would allow companies to accommodate requests in writing from the investment advisers and investment managers that companies and/or intermediaries send them only one copy of a company's annual report and proxy statement or information statement, rather than a separate copy on behalf of each shareholder for whom they are authorized to make proxy voting decisions.

Comment is requested on whether companies and intermediaries should be able to household proxy materials to such investment advisers and investment managers without having to rely on the proposed householding rules since it is unlikely that a single person or entity making the proxy voting decision would need more than one copy of the proxy materials. Commenters who believe that the proposed householding rules should apply are asked to consider if it would be appropriate to permit householding to investment advisers and investment managers by implied consent. Additional comment is sought on whether companies and intermediaries should be allowed to household proxy material without consent or by implied consent to trustees, executors, administrators, guardians or persons who act in similar capacities and who have been vested with proxy voting authority. Finally, are there other situations not addressed by the proposed rules where it may be appropriate to allow householding without any advance consent or by implied consent?

IV. General Request for Comment

Any interested persons wishing to submit written comments on the proposed rule amendments that are the subject of this Release, to suggest additional provisions or changes to the rules, or to submit comments on other matters that might affect proposals contained in this Release, are requested to do so. The Commission also requests comment on whether the proposals, if adopted, would have an adverse effect on competition that is neither necessary nor appropriate in furthering the purposes of the Exchange Act.

The Commission requests comment on whether the proposals, if adopted, would promote efficiency, competition and capital formation. Comments will be considered by the Commission in compliance with its responsibilities under Section 2(b) of the Securities

[61] 17 CFR 240.14a–2(a)(1).

[62] Proposed Rule 14a–2(a)(1)(ii).

[63] See the Note to proposed Rule 14a–3(e)(1).

[64] Proposed Rules 14a–7(a)(2)(i) and (ii).

[65] *See* Release No. 34–34596 (Aug. 25, 1994) [59 FR 45050], Order Approving Proposed Rule Changes by the New York Stock Exchange; Release No. 34–34294 (July 1, 1994) [59 FR 35152], Order Approving Proposed Rule Changes by the American Stock Exchange; and Release No. 34–35681 (May 5, 1995) [60 FR 25749], Order Approving Proposed Rule Changes by the NASD. The SRO rules require the beneficial owner to notify the member organization in writing of the name of the investment adviser and specify that the investment adviser has been designated to receive the proxy and related materials and vote the proxy. In an Information Memo to its member organizations, the NYSE stated that the member organizations may wish to provide consolidated proxies and related materials to investment advisers designated by beneficial owners to exercise voting discretion.

Act,[67] and Sections 3(f) and 23(a) of the Exchange Act.[68] The Commission encourages commenters to provide empirical data or other facts to support their views.

V. Cost/Benefit Analysis

The Commission is sensitive to the costs and benefits imposed by its rules on affected persons and entities. The proposed rules would permit companies and intermediaries to send fewer copies of proxy and information statements to shareholders than they currently must send, and therefore, as discussed below, should result in substantial cost savings to companies. The proposed rules would be voluntary on the part of companies and intermediaries; therefore, to the extent that the proposed rules would require the printing and delivery of notices concerning householding, use of software to track householding consents, or would result in other costs of changing procedures, and the costs outweigh the benefits of householding, companies and intermediaries may decide not to rely on the rules.

Many of the commenters on the proposals adopted in the Companion Release urged the Commission to consider proposing revised rules that would permit companies and intermediaries to household proxy and information statements. Corporate commenters stated that since they generally mail the proxy statement and annual report together in the same envelope, they are unable to achieve any cost savings under the current rules that permit them to household only the annual report.

Several of the commenters stated that the elimination of duplicate proxy materials would result in significant cost savings. One commenter, a newsletter publisher and shareholder service consultant, estimated that companies could eliminate 10–30% of their annual report and proxy statement mailings by householding. Assuming a company's relatively low-cost proxy material package (including the annual report, proxy statement, notice of meeting, proxy card and return envelope) costs $4.70, and a population of 100,000 individual investors, the commenter estimates that householding would produce savings of approximately $47,000 to $141,000 annually for that company. The American Society of Corporate Secretaries and New York Stock Exchange noted in their comment letters that companies' ability to household proxy material would provide greater efficiency in the shareholder communication process without having any adverse effect on investor protection.

Shareholders also have complained to the Commission, companies and intermediaries about receipt of multiple copies of the same disclosure document. They object not only due to their own burdens associated with receipt of unnecessary extra mail, but also to the associated corporate waste and cost of delivering duplicative information.

Companies and intermediaries who rely on the proposed rules would incur costs in obtaining consents and sending notices to shareholders. It is expected that the cost savings to companies would far exceed the costs of obtaining the consents and mailing the notices. Intermediaries would be entitled to reimbursement from companies for the reasonable expenses they incur in obtaining consents to householding from the companies' beneficial shareholders. The proposed rules would require that the notice be a separate written statement and be accompanied by a reply form. The costs associated with sending the notice should be limited to the costs of printing a single page and the postage costs of delivering the notice to shareholders. The cost should be non-recurring because the notice generally will only have to be sent once to each shareholder in a household. Costs of the proposed annual disclosure about householding should be low because the disclosure will be included in the proxy or information statement.

The Commission requests comment on the costs and benefits of the proposed rules, including the cost savings estimate described above and estimates of the costs of obtaining consents and mailing the notice. For purposes of the Small Business Regulatory Enforcement Fairness Act of 1996,[69] the Commission also requests information regarding the potential impact of the proposed rules on the economy on an annual basis. Commenters are requested to include empirical data to support their views.

VI. Paperwork Reduction Act

Certain provisions of the proposed rule amendments contain ''collection of information'' requirements within the meaning of the Paperwork Reduction Act of 1995,[70] and the Commission has submitted them to the Office of Management and Budget (''OMB'') for review in accordance with 44 U.S.C. 3507(d) and 5 CFR 1320.11. The titles for the collections of information are: ''Regulation 14A, Commission Rules 14a–1 through 14a–15 and Schedule 14A''; and ''Regulation 14C, Commission Rules 14c–1 through 14c–7 and Schedule 14C.'' Regulations 14A and C contain currently approved collections of information under OMB control numbers 3235–0059 and 3235–0057, respectively. An agency may not sponsor or conduct, and a person is not required to respond to, an information collection unless a currently valid OMB control number is displayed.

Regulations 14A and 14C set forth proxy and information disclosure requirements. Companies that have a class of securities registered under Section 12 of the Exchange Act are subject to these requirements. When the Commission proposed rules to permit householding of the annual report,[71] it submitted a request for approval of revisions to Regulations 14A and 14C to OMB. OMB has approved the revisions and they are adopted as described in the Companion Release, with some modification.

In its submission, the Commission estimated that the time required to prepare and arrange delivery of the notice (required to be mailed by companies choosing to solicit implied consent to householding of the annual report from shareholders) would be approximately 20 hours per respondent per year. Since the annual report and proxy or information statement generally are mailed to shareholders together in the same package, it is likely that companies and intermediaries would have to mail only one notice to obtain consent to householding of both the annual report and the proxy or information statement. Therefore, the Commission is not changing the 20 hour estimated increase in connection with the notice delivery requirement.

Aside from the notice requirement, the Commission also is proposing a new proxy and information statement disclosure requirement.[72] The proposed new disclosure would require companies choosing to household proxy materials to advise shareholders how they can revoke consent to householding and how to request separate copies of a householded document. The disclosure also would tell shareholders how to request householding. It is estimated that the time to respond to this disclosure would

[67] 15 U.S.C. 77b(b).

[68] 15 U.S.C. 78c(f), 78w(a).

[69] Pub. L. No. 104–121, Title II, 110 Stat. 857 (1996).

[70] 44 U.S.C. 3501–3520.

[71] Release 33–7475 (Nov. 13, 1997) [62 FR 61933].

[72] Proposed Item 23 of Schedule 14A and proposed Item 5 of Schedule 14C.

be approximately one hour per respondent per year.

The Commission estimates that 9,892 respondents are subject to Regulation 14A and that approximately 989 of these would prepare the proposed Schedule 14A householding disclosure. The Commission estimates that the burden associated with Regulation 14A as revised per respondent would be approximately 55 hours for those subject to the proposed disclosure, and 54 hours per respondent for those not subject to the disclosure requirement, for a total annual burden of 535,157 hours. Of this total, it is estimated that 25%, or 133,789 hours of the disclosure burden, would be prepared by in-house counsel and 75%, or 401,368 hours, would be prepared by outside counsel. The estimated cost to the respondent of the disclosure prepared by outside counsel would be $70,239,400 at an estimated hourly rate of $175.

An estimated 253 respondents are subject to Regulation 14C and it is estimated that 25 of these would prepare the proposed Schedule 14C householding disclosure. The Commission estimates that the burden associated with Regulation 14C as revised per respondent would be approximately 55 hours for those subject to the proposed disclosure, and 54 hours per respondent for those not subject to the disclosure requirement, for a total annual burden of 13,687 hours. Of this total, it is estimated that 25%, or 3,422 hours of the disclosure burden, would be prepared by in-house counsel and 75%, or 10,265 hours, would be prepared by outside counsel. The estimated cost to the respondent of the disclosure prepared by outside counsel would be $1,796,375 at an estimated hourly rate of $175.

Information collection title	Burden hours after proposed revisions	Cost after revisions
Reg. 14A	133,789	$70,239,400
Reg. 14C	3,422	1,796,375

Companies and intermediaries are the primary respondents. Responses to the collection of information are voluntary and will not be kept confidential. Pursuant to 44 U.S.C. 3506(c)(2)(B), the Commission solicits comment to: (i) Evaluate whether the proposed collections of information are necessary for the proper performance of the functions of the agency, including whether the information will have practical utility; (ii) evaluate the accuracy of the agency's estimate of the burden of the proposed collections of information; (iii) enhance the quality, utility, and clarity of the information to be collected; and (iv) minimize the burden of the collections of information on respondents, including through the use of automated collection techniques or other forms of information technology.

Persons wishing to submit comments on the collection of information requirements should direct them to the following persons: (i) Desk Officer for the Securities and Exchange Commission, Office of Information and Regulatory Affairs, Office of Management and Budget, Room 3208, New Executive Office Building, Washington, DC 20503; and (ii) Jonathan G. Katz, Secretary, Securities and Exchange Commission, 450 5th Street, NW, Washington, DC 20549–0609, with reference to File No. S7–26–99. OMB is required to make a decision concerning the collections of information between 30 and 60 days after publication; therefore, a comment to OMB is best assured of having its full effect if OMB receives it within 30 days of publication.

VII. Initial Regulatory Flexibility Analysis

This Initial Regulatory Flexibility Analysis has been prepared in accordance with 5 U.S.C. 603. It relates to proposed amendments to Securities Act Rule 154 and Exchange Act Rules 14a–2, 14a–3, 14a–7, 14b–1, 14b–2, 14c–3 and 14c–7. The proposed amendments to the Exchange Act rules would permit companies, banks, brokers and other persons to satisfy the proxy and information statement delivery requirements, with respect to two or more shareholders sharing the same address, by sending a single proxy or information statement to the shareholders (''householding''). The proposed changes to Rule 154 would permit issuers and other persons to household proxy-prospectuses required to be delivered in connection with business combination transactions, exchange offers and reclassifications of securities.

A. Reasons for the Proposed Action

The purpose of the proposed amendments is to allow companies, banks, brokers and other persons to send a single proxy or information statement or combined proxy-prospectus to multiple shareholders residing at a shared address. Pursuant to amendments adopted today in the Companion Release, issuers are able to household prospectuses, annual reports and semiannual reports to security holders. Because the proxy rules require the annual report to accompany or precede delivery of the proxy or information statement, companies generally mail the annual report in the same package with the proxy or information statement. The proposed amendments would permit companies to household proxy and information statements under the same conditions for householding prospectuses and annual reports. If the amendments are adopted, companies will be able to household the entire annual meeting package to consenting shareholders. The proposed amendments are intended to reduce the amount of duplicative information that shareholders receive and lower printing and mailing costs to companies that ultimately are borne by the shareholders.

B. Objectives

The proposed amendments are designed to save costs for companies, brokers, banks and other persons, while maintaining protections for investors. The proposed rules would permit companies and others to household proxy and information statements and combined proxy-prospectuses by obtaining implied or written consent from shareholders. Companies and others may household by implied consent to shareholders residing at a shared address who are members of the same family if the shareholders are given advance written notice and the opportunity to object. Otherwise, the company must obtain written consent to householding from the shareholders. A commenter on the Proposing Release estimated that companies and others could reduce their proxy and information statement mailings by 10–30% if the proposed amendments are adopted. Reliance on the proposed householding rules would be optional; the Commission believes companies and others generally will rely on the proposed rules only to the extent that cost savings can be achieved.

C. Legal Basis

The Commission is proposing to amend Rule 154 pursuant to the authority set forth in Section 19(a) of the Securities Act.[73] It is proposing to amend the proxy rules under the authority set forth in Sections 12, 14 and 23(a) of the Exchange Act.[74]

D. Small Entities Subject to the Rules

Rule 0–10 under the Exchange Act defines the term ''small business'' as a company whose total assets on the last day of its most recent fiscal year were

[73] 15 U.S.C. 77s(a).

[74] 15 U.S.C. 78l, 78n and 78w(a).

$5 million or less.[75] Only small businesses that have securities registered under Section 12 of the Exchange Act are subject to the proxy rules. There are approximately 815 reporting companies that have assets of $5 million or less. As stated above, the proposed householding rules would be optional.

E. Reporting, Recordkeeping, and Other Compliance Issues

The primary goal of the proposed revisions is to remove unnecessary regulatory requirements. The proposed rules, however, would require companies and other parties choosing to solicit implied consent to householding from shareholders to mail a separate written notice of the companies' intention to household proxy and information statements. The proposed rules also would require companies and other parties to undertake in the proxy or information statement to provide, upon written or oral request, a separate copy of the annual report, proxy statement or information statement to a shareholder residing at an address to which they delivered a householded copy. Additionally, companies choosing to household the annual report and proxy or information statement would have to provide instructions in the proxy or information statement as to how: (1) A shareholder can revoke consent to householding; and (2) shareholders sharing an address can request householding. It is likely that the notice generally would not exceed one page, and the proxy or information statement disclosure would be only a paragraph or two in length.

F. Duplicative, Overlapping or Conflicting Federal Rules

The Commission believes that there are no federal rules that duplicate, overlap, or conflict with, the proposed rules.

G. Significant Alternatives

The Regulatory Flexibility Act directs the Commission to consider significant alternatives that would accomplish the stated objective, while minimizing any significant adverse impact on small issuers. In connection with the proposed rules, the Commission considered the following alternatives: (a) The establishment of differing compliance or reporting requirements or timetables that take into account the resources available to small entities; (b) the clarification, consolidation or simplification of compliance and reporting requirements under the rule for small entities; (c) the use of performance rather than design standards; and (d) an exemption from the coverage of the rule, or any part thereof, for small entities.

The proposed rules are intended to remove regulatory requirements for all companies, including those that are small entities. The costs of the proposed notice and undertaking requirements are not expected to be significant and should be more than offset by the cost savings realized as a result of householding proxy and information statements. The Commission considered exempting small entities that are reporting companies from the notice and undertaking requirements, but believes that investors in companies of all sizes should be notified that a company intends to household the proxy and information statement and have the opportunity to object. Since the proposed rules would be optional and should benefit small entities, it was unnecessary to consider exempting them from coverage of the proposed rules.

H. Solicitation of Comments

The Commission encourages the submission of comments with respect to any aspect of this Initial Regulatory Flexibility Analysis. Comment specifically is requested on the number of small entities that would be affected by the proposed rules. Comment also is requested on the impact of the proposed rules on broker and banks that are small entities. Commenters are asked to describe the nature of any impact and provide empirical data supporting the extent of their impact. These comments will be considered in preparation of the Final Regulatory Flexibility Analysis, if the rules are adopted, and will be placed in the same public comment file as comments on the proposed rules themselves.

VIII. Statutory Authority

The Commission is proposing to amend Rule 154 pursuant to the authority set forth in Section 19(a) of the Securities Act. The Commission is proposing to amend Rules 14a–3, 14c–3, 14b–1 and 14b–2 under the authority set forth in sections 12, 14 and 23(a) of the Exchange Act.

List of Subjects

17 CFR Part 230

Investment companies, Reporting and recordkeeping requirements, Securities.

17 CFR Part 240

Reporting and recordkeeping requirements, Securities.

Text of Proposed Rules

For the reasons set out in the preamble, Title 17, Chapter II of the Code of Federal Regulations is proposed to be amended as follows:

PART 230—GENERAL RULES AND REGULATIONS, SECURITIES ACT OF 1933

1. The authority citation for Part 230 continues to read, in part, as follows:

Authority: 15 U.S.C. 77b, 77f, 77g, 77h, 77j, 77r, 77s, 77sss, 78c, 78d, 78*l*, 78m, 78n, 78o, 78w, 78*ll*(d), 79t, 80a–8, 80a–24, 80a–28, 80a–29, 80a–30, and 80a–37, unless otherwise noted.

* * * * *

§ 230.154 [Amended]

2. Section 230.154 is amended by removing paragraph (e).

PART 240—GENERAL RULES AND REGULATIONS, SECURITIES EXCHANGE ACT OF 1934

3. The authority citation for Part 240 continues to read, in part, as follows:

Authority: 15 U.S.C. 77c, 77d, 77g, 77j, 77s, 77z–2, 77eee, 77ggg, 77nnn, 77sss, 77ttt, 78c, 78d, 78f, 78i, 78j, 78j–1, 78k, 78k–1, 78*l*, 78m, 78n, 78o, 78p, 78q, 78s, 78u–5, 78w, 78x, 78*ll*(d), 78mm, 79q, 79t, 80a–20, 80a–23, 80a–29, 80a–37, 80b–3, 80b–4 and 80b–11, unless otherwise noted.

* * * * *

4. Section 240.14a–2 is amended by revising paragraph (a)(1)(ii) to read as follows:

§ 240.14a–2 Solicitations to which § 240.14a–3 to § (240.14a–15 apply.

* * * * *

(a) * * *

(1) * * *

(ii) Furnishes promptly to the person solicited (or person's household in accordance with § 240.14a–3(e)(1)) a copy of all soliciting material with respect to the same subject matter or meeting received from all persons who shall furnish such copies thereof for such purpose and who shall, if requested, defray the reasonable expenses to be incurred in forwarding such material, and

* * * * *

5. Section 240.14a–3 is amended by revising paragraph (e)(1) to read as follows:

§ 240.14a–3 Information to be furnished to security holders.

* * * * *

(e)(1)(i) A registrant will be considered to have delivered an annual report and/or proxy statement, as applicable, to all security holders of record who share an address if:

[75] 17 CFR 240.0–10.

(A) The registrant delivers one annual report and/or proxy statement to the shared address;

(B) The registrant addresses the annual report and/or proxy statement to the security holders as a group (for example, ''ABC Fund [or Corporation] Shareholders,'' ''Jane Doe and Household,'' ''The Smith Family'') or to each of the security holders individually (for example, ''John Doe and Richard Jones'');

(C) The security holders consent in writing to delivery of one annual report and/or proxy statement;

(D) With respect to delivery of the proxy statement, the registrant includes a separate proxy card for each security holder residing at the shared address; and

(E) The registrant includes an undertaking in the proxy statement to deliver promptly upon written or oral request a separate copy of the annual report and/or proxy statement to a security holder residing at a shared address to which a single copy of the documents was delivered.

(ii) *Implied consent.* The registrant need not obtain written consent from a security holder if all of the following conditions are met:

(A) The security holder has the same last name as the other security holders, or the registrant reasonably believes that the security holders are members of the same family;

(B) The registrant has sent the security holder a notice at least 90 days before the registrant begins to rely on this section concerning delivery of annual reports and/or proxy statements to that security holder. The notice must:

(*1*) Be a separate written statement that is delivered separately from any other communications;

(*2*) State that only one annual report and/or proxy statement will be delivered to the shared address unless the registrant receives contrary instructions;

(*3*) Include a toll-free telephone number, or be accompanied by a reply form that is pre-addressed with postage provided, that the security holder can use to notify the registrant that the security holder wishes to receive a separate annual report and/or proxy statement;

(*4*) State the duration of the consent;

(*5*) Explain how a security holder can revoke consent;

(*6*) State that the registrant will begin sending individual copies to a security holder within 30 days after the security holder revokes consent; and

(*7*) Contain the following prominent statement, or similar clear and understandable statement, in bold-face type: ''Important Notice Regarding Delivery of Shareholder Documents.'' Alternatively, this statement may appear on the envelope containing the notice;

Note to paragraph (e)(1)(ii)(B). The notice should be written in plain English. *See* § 230.421(d)(2) of this chapter for a discussion of plain English principles.

(C) The registrant has not received the reply form or other notification indicating that the security holder wishes to continue to receive an individual copy of the annual report and/or proxy statement, within 90 days after the registrant sent the notice; and

(D) The registrant delivers the report to a post office box or to a residential street address. The registrant can assume that a street address is a residence unless it has information that indicates it is a business.

(iii) *Revocation of consent.* If a security holder, orally or in writing, revokes consent to delivery of one annual report and/or proxy statement, to a shared address, the registrant must begin sending individual copies to that security holder within 30 days after the registrant receives revocation of the security holder's consent.

(iv) *Definition of address.* For purposes of this section, *address* means a street address, a post office box number, an electronic mail address, a facsimile telephone number, or other similar destination to which paper or electronic documents are delivered, unless otherwise provided in this section. If the registrant has reason to believe that the address is a street address of a multi-unit building, the address must include the unit number.

Note to paragraph (e)(1). A person other than the registrant making a proxy solicitation may deliver a single proxy statement to security holders of record who have separate accounts and share an address if: (a) The registrant has followed the procedures in this section; and (b) the registrant makes available the shared address information to the person in accordance with § 240.14a–7(a)(2)(i) and (ii).

* * * * *

6. Section 240.14a–7 is amended by revising paragraphs (a)(2)(i) and (ii) and designating the existing note to § 240.14a–7 as Note 1, revising the heading to the notes, and adding Note 2 to read as follows:

§ 240.14a–7 Obligations of registrants to provide a list of, or mail soliciting materials to, security holders.

* * * * *

(a) * * *

(2) * * *

(i) Mail copies of any proxy statement, form of proxy or other soliciting material furnished by the security holder to the record holders, including banks, brokers, and similar entities, designated by the security holder. A sufficient number of copies must be mailed to the banks, brokers, and similar entities for distribution to all beneficial owners designated by the security holder. If the registrant, banks, brokers or similar entities have received implied or written consent to deliver a single proxy statement to security holders residing at a shared address in accordance with the procedures in § 240.14a–3(e)(1), § 240.14b–1(b)(2), or § 240.14b–2(b)(3), a single copy of the proxy statement furnished by the security holder shall be mailed to that address. The registrant shall mail the security holder material with reasonable promptness after tender of the material to be mailed, envelopes or other containers therefor, postage or payment for postage and other reasonable expenses of effecting such mailing. The registrant shall not be responsible for the content of the material; or

(ii) Deliver the following information to the requesting security holder within five business days of receipt of the request: a reasonably current list of the names, addresses and security positions of the record holders, including banks, brokers and similar entities holding securities in the same class or classes as holders which have been or are to be solicited on management's behalf, or any more limited group of such holders designated by the security holder if available or retrievable under the registrant's or its transfer agent's security holder data systems; the most recent list of names, addresses and security positions of beneficial owners as specified in § 240.14a–13(b), in the possession, or which subsequently comes in the possession, of the registrant; and the names of security holders residing at a shared address that have consented to delivery of a single copy of proxy materials to a shared address, if the registrant has received implied or written consent in accordance with § 240.14a–3(e)(1). All security holder list *information* shall be in the form requested by the security holder to the extent that such form is available to the registrant without undue burden or expense. The registrant shall furnish the security holder with updated record holder information on a daily basis or, if not available on a daily basis, at the shortest reasonable intervals, *provided*, however, the registrant need not provide beneficial or record holder information more current than the record date for the meeting or action.

* * * * *

Notes to § 240.14a–7.

1. * * *

2. When providing the information required by § 240.14a–7(a)(1)(ii), if the registrant has received implied or written consent to householding in accordance with § 240.14a–3(e)(1), it shall exclude from the number of record holders those to whom it does not have to deliver a separate proxy statement.

7. Section 240.14a–101 is amended by adding Item 23 to read as follows:

§ 240.14a–101 Schedule 14A Information required in proxy statement.

* * * * *

Item 23. Delivery of documents to security holders residing at a shared address. If one annual report and/or proxy statement is being delivered (''householded'') to two or more security holders who share an address in accordance with § 240.14a–3(e)(1), furnish the following information:

(a) State that only one annual report and/or proxy statement is being delivered to multiple security holders residing at a shared address unless the registrant has received contrary instructions from one or more of the security holders;

(b) Undertake to deliver promptly upon written or oral request a separate copy of the annual report and/or proxy statement to a security holder residing at a shared address to which a single copy of the documents was delivered;

(c) Provide instructions as to how a security holder can notify the registrant that the security holder wishes to receive a separate annual report and/or proxy statement in the future; and

(d) Provide instructions how security holders sharing an address can request householding if they are receiving multiple copies of the annual report and/or proxy statement.

8. Section 240.14b–1 is amended by adding a note following paragraph (b)(2) and by adding paragraph (c)(3) to read as follows:

§ 240.14b–1 Obligation of registered brokers and dealers in connection with the prompt forwarding of certain communications to beneficial owners.

* * * * *

(b)(2) * * *

Note to paragraph (b)(2): The broker or dealer may, on its own initiative, or at the request of a registrant, deliver one annual report, proxy statement, or information statement to more than one beneficial owner residing at a shared address if the requirements set forth in § 240.14a–3(e)(1)(with respect to annual reports and proxy statements), and § 240.14c–3(c)(with respect to annual reports and information statements) applicable to registrants are satisfied instead by the broker or dealer.

* * * * *

(c) * * *

(3) In its response pursuant to paragraph (b)(1) of this section, a broker or dealer shall not include information about proxy statements, information statements or annual reports that will not be delivered to security holders residing at a shared address because of the broker or dealer's reliance on the householding procedures referred to in the Note to paragraph (b)(2) of this section.

9. Section 240.14b–2 is amended by adding a note to paragraph (b)(3) and by adding paragraph (c)(4) to read as follows:

§ 240.14b–2 Obligation of banks, associations and other entities that exercise fiduciary powers in connection with the prompt forwarding of certain communications to beneficial owners.

* * * * *

(b)(3) * * *

Note to paragraph (b)(3): The bank may, on its own initiative, or at the request of a registrant, deliver one annual report, proxy statement, or information statement to more than one beneficial owner residing at a shared address if the requirements set forth in § 240.14a–3(e)(1) (with respect to annual reports and proxy statements), and § 240.14c–3(c) (with respect to annual reports and information statements) applicable to registrants are satisfied instead by the bank.

* * * * *

(c) * * *

(4) A bank shall not include information in its response pursuant to paragraphs (b)(1)(ii)(A) of this section proxy statements, information statements or annual reports that will not be delivered to security holders residing at a shared address because of the bank's reliance on the householding procedures referred to in the Note to paragraph (b)(3) of this section.

10. Section 240.14c–3 is amended by adding paragraph (c) to read as follows:

§ 240.14c–3 Annual report to be furnished security holders.

* * * * *

(c) A registrant will be considered to have delivered an annual report or information statement to security holders of record who share an address if the requirements set forth in § 240.14a–3(e)(1) are satisfied.

11. Section 240.14c–101 is amended by adding Item 5 to read as follows:

§ 240.14c–101 Schedule 14C Information required in information statement

Item 5. Delivery of documents to security holders residing at a shared address. If one annual report and/or information statement is being delivered (''householded'') to two or more security holders who share an address in accordance with § 240.14a–3(e)(1), furnish the following information:

(a) State that only one annual report and/or proxy statement is being delivered to multiple security holders residing at a shared address unless the registrant has received contrary instructions from one or more of the security holders;

(b) Undertake to deliver promptly upon written or oral request a separate copy of the annual report and/or information statement to a security holder residing at a shared address to which a single copy of the documents was delivered;

(c) Provide instructions as to how a security holder can notify the registrant that the security holder wishes to receive a separate annual report and/or information statement in the future; and

(d) Provide instructions how security holders sharing an address can request householding if they are receiving multiple copies of the annual report and/or information statement.

Dated: November 4, 1999.

By the Commission.

Margaret H. McFarland,

Deputy Secretary.

[FR Doc. 99–29532 Filed 11–15–99; 8:45 am]

BILLING CODE 8010–01–P

Reader Aids

Federal Register

Vol. 64, No. 220

Tuesday, November 16, 1999

CUSTOMER SERVICE AND INFORMATION

Federal Register/Code of Federal Regulations

General Information, indexes and other finding aids	**202–523–5227**
Laws	**523–5227**
Presidential Documents	
Executive orders and proclamations	**523–5227**
The United States Government Manual	**523–5227**
Other Services	
Electronic and on-line services (voice)	**523–4534**
Privacy Act Compilation	**523–3187**
Public Laws Update Service (numbers, dates, etc.)	**523–6641**
TTY for the deaf-and-hard-of-hearing	**523–5229**

ELECTRONIC RESEARCH

World Wide Web

Full text of the daily Federal Register, CFR and other publications:

http://www.access.gpo.gov/nara

Federal Register information and research tools, including Public Inspection List, indexes, and links to GPO Access:

http://www.nara.gov/fedreg

E-mail

PENS (Public Law Electronic Notification Service) is an E-mail service for notification of recently enacted Public Laws. To subscribe, send E-mail to

listserv@www.gsa.gov

with the text message:

subscribe PUBLAWS-L your name

Use listserv@www.gsa.gov only to subscribe or unsubscribe to PENS. We cannot respond to specific inquiries.

Reference questions. Send questions and comments about the Federal Register system to:

info@fedreg.nara.gov

The Federal Register staff cannot interpret specific documents or regulations.

FEDERAL REGISTER PAGES AND DATE, NOVEMBER

58755–59106 1
59107–59602 2
59603–60082 3
60083–60332 4
60333–60646 5
60647–61014 8
61015–61198 9
61199–61472 10
61473–61768 12
61769–62088 15
62089–62560 16

CFR PARTS AFFECTED DURING NOVEMBER

At the end of each month, the Office of the Federal Register publishes separately a List of CFR Sections Affected (LSA), which lists parts and sections affected by documents published since the revision date of each title.

3 CFR

Proclamations:
7245 59103
7246 60083
7247 60085
7248 61473

Executive Orders:
13067 (See Notice of October 29, 1999) 59105
13096 (See Proc. 7247) 60085
12170 (See Notice of November 5, 1999) 61471
12938 (See Notice of November 10, 1999 61767

Administrative Orders:
Memorandums:
October 27, 1999 60647
Notices:
October 29, 1999 59105
November 5, 1999 61471
November 10, 1999 61767
Presidential Determinations:
No. 99–13 of February 4, 1999 (See Presidential Determination No. 2000–5 of October 29, 1999 60651
No. 2000–2 of October 21, 1999 58755
No. 2000–3 of October 25, 1999 58757
No. 2000–4 of October 27, 1999 60649
No. 2000–5 of October 29, 1999 60651

5 CFR

532 ..... 60087, 61769

Proposed Rules:
532 61793
1201 58798

7 CFR

210 61770
220 61770
226 61770
246 61015
301 ..... 60088, 60333
319 59603
354 62089
905 58759
928 59604
944 58759
981 ..... 58763, 59107
1001 61776
1002 61776
1004 61776
1005 61776
1006 61776
1007 61776
1012 61776
1013 61776
1030 61776
1032 61776
1033 61776
1036 61776
1040 61776
1044 61776
1046 61776
1049 61776
1050 61776
1064 61776
1065 61776
1068 61776
1076 61776
1079 61776
1106 61776
1124 61776
1126 ..... 61199, 61776
1131 ..... 61201, 61776
1134 61776
1135 61776
1137 ..... 61199, 61776
1138 ..... 61201, 61776
1139 61776
1439 58766
1477 58766

Proposed Rules:
278 59665
770 59131
785 61034
923 60733
1217 59669
1823 59131
1946 61034
1951 61221
1956 59131

9 CFR

77 58769
130 61689

Proposed Rules:
130 61689
391 61223

10 CFR

Proposed Rules:
2 ..... 59669, 59671
50 59671
72 59677
73 59684
430 61794

11 CFR

100 59113
110 59606
114 59113
9003 61475
9004 ..... 59606, 61475
9007 61777
9008 61475

9032 61475
9033 61475
9034 ..... 59606, 61475, 61777
9035 ..... 61475, 61777
9036 ..... 59607, 61475
9038 61777

Proposed Rules:

100 60360
102 60360
103 60360
104 60360
106 60360
107 60360
109 60360
110 60360
114 60360
116 60360

12 CFR

1 60092
5 60092
7 60092
211 58780
226 60335
229 59607
308 62096
330 62096
343 62103
905 61016
1805 59076

Proposed Rules:

226 60368
611 60370
650 61740
1102 58800

13 CFR

Proposed Rules:

120 60735

14 CFR

34 60335
39 ..... 59113, 59115, 59116, 59117, 59613, 59614, 60100, 60102, 60336, 61475, 61477, 61478, 61480, 61482, 61484, 61485, 61487, 61491, 61493, 61495, 61782, 61784, 62105, 62106, 62108, 62109
71 ..... 59615, 60337, 60653, 60654, 61785
73 60339
97 ..... 61017, 61018
139 60068

Proposed Rules:

39 ..... 59137, 59685, 60134, 60136, 60138, 60383, 60386, 60742, 60743, 60745, 60748, 60750, 61039, 61042, 61044, 61533, 61540, 61547, 61554, 61794, 61796, 61798, 61801, 62129, 62131
71 ..... 59687, 59688, 59689, 59690, 60388, 61225, 61689, 61690, 61803, 61804
93 62133

15 CFR

285 59616
738 60339
740 60339
746 60339
801 59119

Proposed Rules:

287 59691

16 CFR

312 59888
1616 61021

17 CFR

200 ..... 61382, 61408
210 61962
228 61962
229 ..... 61408, 61962
230 ..... 61382, 61408, 61497, 61962, 62540
232 61408
239 ..... 61382, 61408, 61962
240 ..... 61382, 61408, 61962, 62540
249 ..... 61382, 61962
260 ..... 61382, 61962
270 62540
271 59877

Proposed Rules:

1 59694
230 62548
239 59826
240 ..... 59826, 62548
270 59826
274 59826
275 61226
279 61226

18 CFR

Proposed Rules:

35 60390
141 60140
385 60140

19 CFR

10 61204

Proposed Rules:

101 61232
141 62135

20 CFR

Proposed Rules:

322 62135

21 CFR

5 59617
175 60104
310 62110
801 59618

Proposed Rules:

20 60143
600 61045
606 61045
607 61045
610 61045
630 61045
640 61045
660 61045
801 59695

24 CFR

982 59620
990 61516

25 CFR

Proposed Rules:

504 61234

26 CFR

1 ..... 58782, 59139, 60342, 61205, 61498
301 ..... 58782, 61498, 61502
602 61498

Proposed Rules:

1 ..... 59139, 60395, 61236

28 CFR

0 58782
2 59622
16 61786
27 58782
50 59122

Proposed Rules:

16 60753

29 CFR

37 61692
1917 61504
1918 61504
4044 61787

Proposed Rules:

1401 59697
1952 62138
2590 62054
2700 61236

30 CFR

934 60654
948 ..... 61506, 61507

Proposed Rules:

946 61805

31 CFR

18 62112
Ch. V 60660
538 58789
550 58789
560 58789

32 CFR

199 60671
2001 62113

33 CFR

100 59623
117 ..... 59123, 59624, 60672, 60673, 60674, 61206, 61207, 61518, 61519, 61520, 61521, 62113
165 ..... 61051, 61209

Proposed Rules:

110 60399
117 61561

34 CFR

668 ..... 58974, 59016, 59060
682 ..... 58938, 59016
685 ..... 58938, 59016

Proposed Rules:

611 60632

36 CFR

211 60675

Proposed Rules:

5 61563
13 61563
Ch. XI 60753
1190 62248
1191 62248

37 CFR

Proposed Rules:

1 59701
201 59140

39 CFR

20 60106

40 CFR

51 58792
52 ..... 59625, 59629, 59633, 59635, 59638, 59642, 59644, 60109, 60343, 60346, 60678, 60681, 60683, 60687, 60688, 61213, 61217, 61522, 61523
62 ..... 59648, 60689, 62114, 62117
63 59650
68 59650
131 61182
180 ..... 59652, 60112, 61788
300 ..... 60121, 61526

Proposed Rules:

51 62144
52 ..... 59703, 59704, 59705, 59706, 60400, 60401, 60759, 61046, 61051, 61239, 61572
62 ..... 59718, 62144, 62145
63 59719
68 59719
81 60478
82 59141
86 60401
141 59245
142 59245
152 62145
156 62145
180 58792
300 61051
372 61807

41 CFR

101 59591
101-11 60348
101-43 62146
102 59591
102-36 62146

42 CFR

61 61218
409 60122
410 59379
411 ..... 59379, 60122
413 60122
414 59379
415 59379
485 59379
489 60122

Proposed Rules:

431 60882
433 60882
435 60882
457 60882

43 CFR

414 58986

Proposed Rules:

1300 61810

44 CFR

65 ..... 60706, 60709
67 60711

Proposed Rules:

67 60759

45 CFR

Proposed Rules:

160 59918
161 59918
162 59918
163 59918
164 59918
303 62054

46 CFR

Proposed Rules:

2 62018

30 62018
31 62018
52 62018
61 62018
71 62018
90 62018
91 62018
98 62018
107 62018
110 62018
114 62018
115 62018
125 62018
126 62018
132 62018
133 62018
134 62018
167 62018
169 62018
175 62018
176 62018
188 62018
189 62018
195 62018
199 62018

47 CFR

Ch. 1 61527
0 ....60122, 60715, 61022
1 ....59656, 60122, 60715, 62119
2 60123
20 ....59656, 60126
21 60715
25 61791
27 60715
54 ....60349, 62120
61 60122
68 60715
69 ....60122, 60349
73 ....59124, 59655, 60131, 62123
76 60131
90 ....59148, 60123, 60715
95 59656
101 59663

Proposed Rules:

1 59719
15 62159
18 62159
20 59719
43 59719
73 ....59147, 59148, 59728, 60149, 60150, 60151, 61054, 61239
90 ....59148, 60151

48 CFR

201 58908
204 61028
208 61030
209 61028
213 58908
215 61031
225 61028
242 61028
247 61028
251 61030

Proposed Rules:

211 61056

49 CFR

171 61219
172 61219
240 60966
601 61033

Proposed Rules:

178 62161
Ch. II 59046
209 59046
552 60556
571 ....60556, 61810
585 60556
595 60556

50 CFR

17 58910
20 61532
222 60727
600 60731
622 ....59126, 60132
635 58793
640 59126
648 ....60359, 61220
660 ....59129, 62127
679 61966

Proposed Rules:

16 59149
17 ....58934, 59729
25 62163
26 62163
29 62163
622 ....59152, 59153, 60151, 60402
648 59156
654 59153
660 60402
679 ....58796, 59730, 60157

REMINDERS

The items in this list were editorially compiled as an aid to Federal Register users. Inclusion or exclusion from this list has no legal significance.

RULES GOING INTO EFFECT NOVEMBER 16, 1999

AGRICULTURE DEPARTMENT

Rural Utilities Service

Telecommunications loans:

General policies, types of loans and loan requirements; published 9-17-99

ENVIRONMENTAL PROTECTION AGENCY

Air programs; approval and promulgation; State plans for designated facilities and pollutants:

Delaware; published 9-17-99

Delaware; correction; published 9-29-99

Superfund program:

National oil and hazardous substances contingency plan—

National priorities list; update; published 9-17-99

FEDERAL COMMUNICATIONS COMMISSION

Common carrier services:

Federal-State Joint Board on Universal Service—

Universal service order; published 11-16-99

Practice and procedure:

Wireless transfers and assignments; time for consummation and notification; published 11-16-99

Radio broadcasting:

Broadcast, broadcast cable and cable/Multipoint Distribution Service cross-ownership attribution rules; regulatory review; published 9-17-99

Effective date; published 11-3-99

Television broadcasting:

Broadcast television; national ownership rule compliance; published 9-17-99

Effective date; published 10-6-99

Television satellite stations; policy and rules review; published 9-17-99

FEDERAL DEPOSIT INSURANCE CORPORATION

Practice and procedure:

Technical amendments; published 11-16-99

TRANSPORTATION DEPARTMENT

Federal Aviation Administration

Airworthiness directives:

Fairchild; published 10-7-99

TREASURY DEPARTMENT

Organization, functions, and authority delegations:

Offical designation in case of absence, disability,or vacancy; published 11-16-99

COMMENTS DUE NEXT WEEK

AGRICULTURE DEPARTMENT

Agricultural Marketing Service

Perishable Agricultural Commodities Act; implementation:

Limited liability companies; recognition as legal entities; comments due by 11-24-99; published 10-25-99

Tobacco inspection:

Flue-cured tobacco—

Elimination of interference, distraction, and outside influence on tobacco grading; comments due by 11-26-99; published 9-27-99

AGRICULTURE DEPARTMENT

Animal and Plant Health Inspection Service

User fees:

Veterinary services—

Export certificate endorsements; comments due by 11-22-99; published 9-23-99

COMMERCE DEPARTMENT

National Oceanic and Atmospheric Administration

Endangered and threatened species:

Findings on petitions, etc.—

White abalone; comments due by 11-22-99; published 9-24-99

Marine mammals:

Incidental taking—

U.S. Navy; operations of Surveillance Towed Array Sensor System Low Frequency Active Sonar; comments due by 11-22-99; published 10-22-99

DEFENSE DEPARTMENT

Federal Acquisition Regulation (FAR):

Price reasonableness and commerciality determination; comments due by 11-23-99; published 9-24-99

Recycled products and environmentally preferable services; comments due by 11-22-99; published 9-23-99

EDUCATION DEPARTMENT

Postsecondary education:

Preparing Tomorrow's Teachers to Use Technology Program; comments due by 11-22-99; published 10-22-99

ENVIRONMENTAL PROTECTION AGENCY

Air programs; approval and promulgation; State plans for designated facilities and pollutants:

Pennsylvania; comments due by 11-26-99; published 10-27-99

Air quality implementation plans:

Preparation, adoption, and submittal—

Motor vehicle inspection/maintenance program requirements; comments due by 11-23-99; published 11-16-99

Air quality implementation plans; approval and promulgation; various States:

District of Columbia; comments due by 11-26-99; published 10-27-99

Hazardous waste:

Identification and listing—

Chlorinated aliphatics production wastes; comments due by 11-23-99; published 8-25-99

Pesticides; tolerances in food, animal feeds, and raw agricultural commodities:

Spinosad; comments due by 11-22-99; published 9-23-99

Tebufenozide; comments due by 11-22-99; published 9-22-99

Radiation protection programs:

Yucca Mountain, NV; environmental protection standards; comments due by 11-26-99; published 8-27-99

Public hearings; comments due by 11-26-99; published 10-1-99

EXECUTIVE OFFICE OF THE PRESIDENT

National Drug Control Policy Office

Freedom of Information Act; implementation; comments due by 11-22-99; published 9-22-99

FEDERAL COMMUNICATIONS COMMISSION

Digital television stations; table of assignments:

Oklahoma; comments due by 11-26-99; published 10-6-99

Oregon; comments due by 11-26-99; published 10-6-99

FEDERAL TRADE COMMISSION

Privacy Act; implementation; comments due by 11-26-99; published 10-27-99

GENERAL SERVICES ADMINISTRATION

Federal Acquisition Regulation (FAR):

Price reasonableness and commerciality determination; comments due by 11-23-99; published 9-24-99

Recycled products and environmentally preferable services; comments due by 11-22-99; published 9-23-99

HEALTH AND HUMAN SERVICES DEPARTMENT

Privacy Act; implementation; comments due by 11-26-99; published 10-26-99

HEALTH AND HUMAN SERVICES DEPARTMENT

Inspector General Office, Health and Human Services Department

Privacy Act; implementation; comments due by 11-26-99; published 10-26-99

INTERIOR DEPARTMENT

Surface Mining Reclamation and Enforcement Office

Permanent program and abandoned mine land reclamation plan submissions:

Oklahoma; comments due by 11-22-99; published 10-22-99

MANAGEMENT AND BUDGET OFFICE

Federal Procurement Policy Office

Acquisition regulations:

Cost Accounting Standards Board—

Cost accounting practices; changes; meeting; comments due by 11-22-99; published 10-19-99

NATIONAL AERONAUTICS AND SPACE ADMINISTRATION

Federal Acquisition Regulation (FAR):

Price reasonableness and commerciality determination; comments due by 11-23-99; published 9-24-99

Recycled products and environmentally preferable services; comments due by 11-22-99; published 9-23-99

NATIONAL CREDIT UNION ADMINISTRATION

Credit unions:

Corporate credit unions; comments due by 11-26-99; published 7-28-99

SECURITIES AND EXCHANGE COMMISSION

Securities:

Repurchase agreements and refunded securities treatment as acquisition of underlying securities; comments due by 11-23-99; published 9-29-99

TRANSPORTATION DEPARTMENT

Coast Guard

Ports and waterways safety:

Hudson River, NY; safety zone; comments due by 11-24-99; published 10-25-99

TRANSPORTATION DEPARTMENT

Air travel; nondiscrimination on basis of disability; and federally assisted programs and activities:

Equipment to facilitate boarding of aircraft by individuals with disabilities; comments due by 11-24-99; published 8-26-99

TRANSPORTATION DEPARTMENT

Federal Aviation Administration

Airworthiness directives:

Aerospatiale; comments due by 11-24-99; published 10-25-99

Airbus; comments due by 11-26-99; published 10-27-99

Boeing; comments due by 11-22-99; published 10-6-99

Bombardier; comments due by 11-26-99; published 10-27-99

British Aerospace; comments due by 11-26-99; published 10-26-99

CFE Co.; comments due by 11-22-99; published 9-23-99

Fairchild; comments due by 11-24-99; published 9-23-99

Lockheed; comments due by 11-22-99; published 10-6-99

Pratt & Whitney; comments due by 11-22-99; published 9-23-99

Robinson Helicopter Co.; comments due by 11-22-99; published 9-22-99

Airworthiness standards:

Special conditions—

Boeing Model 747-100, -100B, -100B SUD, -200B, -200C, -200F, and -300 series airplanes; comments due by 11-22-99; published 10-8-99

Class D airspace; comments due by 11-22-99; published 9-22-99

Class E airspace; comments due by 11-26-99; published 10-26-99

TREASURY DEPARTMENT

Alcohol, Tobacco and Firearms Bureau

Alcoholic beverages:

Hard cider; comments due by 11-26-99; published 9-27-99

TREASURY DEPARTMENT

Internal Revenue Service

Income taxes:

Tax-exempt bonds issued by State and local governments; arbitrage restrictions; comments due by 11-26-99; published 8-27-99

LIST OF PUBLIC LAWS

This is a continuing list of public bills from the current session of Congress which have become Federal laws. It may be used in conjunction with ''P L U S'' (Public Laws Update Service) on 202–523–6641. This list is also available online at http://www.nara.gov/fedreg.

The text of laws is not published in the **Federal Register** but may be ordered in ''slip law'' (individual pamphlet) form from the Superintendent of Documents, U.S. Government Printing Office, Washington, DC 20402 (phone, 202–512–1808). The text will also be made available on the Internet from GPO Access at http://www.access.gpo.gov/nara/index.html. Some laws may not yet be available.

H.R. 441/P.L. 106–95

Nursing Relief for Disadvantaged Areas Act of 1999 (Nov. 12, 1999; 113 Stat. 1312)

H.R. 609/P.L. 106–96

To amend the Export Apple and Pear Act to limit the applicability of the Act to apples. (Nov. 12, 1999; 113 Stat. 1321)

H.R. 915/P.L. 106–97

To authorize a cost of living adjustment in the pay of administrative law judges. (Nov. 12, 1999; 113 Stat. 1322)

H.R. 974/P.L. 106–98

District of Columbia College Access Act of 1999 (Nov. 12, 1999; 113 Stat. 1323)

H.R. 2303/P.L. 106–99

History of the House Awareness and Preservation Act (Nov. 12, 1999; 113 Stat. 1330)

H.R. 3122/P.L. 106–100

To permit the enrollment in the House of Representatives Child Care Center of children of Federal employees who are not employees of the legislative branch. (Nov. 12, 1999; 113 Stat. 1332)

H.J. Res. 54/P.L. 106–101

Granting the consent of Congress to the Missouri-Nebraska Boundary Compact. (Nov. 12, 1999; 113 Stat. 1333)

S. 900/P.L. 106–102

Gramm-Leach-Bliley Act (Nov. 12, 1999; 113 Stat. 1338)

H.R. 348/P.L. 106–103

To authorize the construction of a monument to honor those who have served the Nation's civil defense and emergency management programs. (Nov. 13, 1999; 113 Stat. 1482)

H.R. 3061/P.L. 106–104

To amend the Immigration and Nationality Act to extend for an additional 2 years the period for admission of an alien as a nonimmigrant under section 101(a)(15)(S) of such Act, and to authorize appropriations for the refugee assistance program under chapter 2 of title IV of the Immigration and Nationality Act. (Nov. 13, 1999; 113 Stat. 1483)

Last List November 15, 1999

Public Laws Electronic Notification Service (PENS)

PENS is a free electronic mail notification service of newly enacted public laws. To subscribe, go to www.gsa.gov/archives/publaws-l.html or send E-mail to **listserv@www.gsa.gov** with the following text message:

SUBSCRIBE PUBLAWS-L Your Name.

Note: This service is strictly for E-mail notification of new laws. The text of laws is not available through this service. **PENS** cannot respond to specific inquiries sent to this address.