DEPARTMENT OF TRANSPORTATION

National Highway Traffic Safety Administration

49 CFR Parts 552, 571, 585, and 595

[Docket No. NHTSA 99–6407; Notice 1]

RIN 2127–AG70

Federal Motor Vehicle Safety Standards; Occupant Crash Protection

AGENCY: National Highway Traffic Safety Administration (NHTSA), DOT.

ACTION: Supplemental notice of proposed rulemaking (SNPRM).

SUMMARY: In September 1998, we proposed to upgrade our air bag requirements for passenger cars and light trucks to meet the twin goals mandated by the Transportation Equity Act for the 21st Century: improving protection for occupants of all sizes, belted and unbelted, in moderate to high speed crashes; and minimizing the risks posed by air bags to infants, children, and other occupants, especially in low speed crashes. In response to the public comments on our 1998 proposal and to other new information obtained since issuing the proposal, we are issuing a supplemental proposal that updates and refines the amendments under consideration.

With respect to the goal of improving protection, we are proposing to adopt one of the following alternative crash tests to evaluate the protection of unbelted occupants in moderate to high speed crashes, i.e., those that are potentially fatal. One alternative is an unbelted rigid barrier test (perpendicular and up to ± 30 degrees oblique to perpendicular) with a maximum speed to be established in the final rule within the range of 40 to 48 km/h (25 to 30 mph). If we reduce the maximum speed to 40 km/h (25 mph) permanently, we might also increase the maximum speed of the belted rigid barrier test from the current 48 km/h to 56 km/h (30 to 35 mph). Another alternative is an unbelted offset deformable barrier test with a maximum speed to be established in the final rule within the range of 48 to 56 km/h (30 to 35 mph). The vehicle would have to meet the requirements both in tests with the driver side of the vehicle engaged with the barrier and in tests with the passenger side engaged.

With respect to the goal of minimizing the risks of air bags in low speed crashes, we continue to propose performance requirements to ensure that future air bags do not pose unreasonable risk of serious injury to out-of-position occupants. We continue to propose to adopt a number of options for complying with those requirements so that vehicle manufacturers would be free to choose from a variety of effective technological solutions and to develop new ones if they so desire. With this flexibility, they could use technologies that modulate or otherwise control air bag deployment so deploying air bags do not cause serious injuries, technologies that prevent air bag deployment if children or out-of-position occupants are present, or a combination thereof.

DATES: You should submit your comments early enough to ensure that Docket Management receives them not later than December 30, 1999.

ADDRESSES: You may submit your comments in writing to: Docket Management, Room PL–401, 400 Seventh Street, SW, Washington, DC 20590. You may also submit your comments electronically by logging onto the Dockets Management System website at http://dms.dot.gov. Click on ''Help & Information'' or ''Help/Info'' to obtain instructions for filing the document electronically. Regardless of how you submit your comments, you should mention the docket number of this document.

You may call Docket Management at 202–366–9324 and visit the Docket from 10:00 a.m. to 5:00 p.m., Monday through Friday.

FOR FURTHER INFORMATION CONTACT: *For information about air bags and related rulemakings:* Visit the NHTSA web site at http://www.nhtsa.dot.gov and select ''Air Bags'' under ''Popular Information.''

For non-legal issues, you may contact Clarke Harper, Chief, Light Duty Vehicle Division, NPS–11. Telephone: (202) 366–2264. Fax: (202) 366–4329. E-mail: Charper@NHTSA.dot.gov.

For legal issues, you may contact Edward Glancy, Office of Chief Counsel, NCC–20. Telephone: (202) 366–2992. Fax: (202) 366–3820.

You may send mail to both of these officials at the National Highway Traffic Safety Administration, 400 Seventh St., S.W., Washington, D.C. 20590.

SUPPLEMENTARY INFORMATION:

Note to readers: As an aid to readers who are outside the engineering community, we have provided at the end of this document a glossary that briefly explains the key technical terms used in this preamble. In the case of the term, ''fixed barrier crash test,'' we have supplemented the explanation with illustrations. That glossary appears in Appendix B. Interested persons may find it helpful to review that glossary before reading the rest of this document.

Table of Contents

I. Executive Summary
II. Background
A. Statutory Requirements
B. Existing Air Bag Requirements
C. September 1998 NPRM
D. Public Comments
1. Tests for Requirements to Improve Occupant Protection for Different Size Occupants, Belted and Unbelted
a. Belted Rigid Barrier Test
b. Unbelted Rigid Barrier Test
c. Up-to-40 km/h (25 mph) Offset Deformable Barrier Test
2. Tests for Requirements to Minimize the Risk to Infants, Children and Other Occupants from Injuries and Deaths Caused by Air Bags
a. Tests to Minimize Risks to Infants
b. Tests to Minimize Risks to Children
c. Tests to Minimize Risks to Adults
3. Injury Criteria
E. Events since September 1998
III. SNPRM for Advanced Air Bags
A. Introduction
B. Existing and Proposed Test Requirements
1. Tests for Requirements to Improve Occupant Protection for Different Size Occupants, Belted and Unbelted
a. September 1998 NPRM
b. Comments on September 1998 NPRM
c. SNPRM
(i) Requirements for Tests with Unbelted Dummies
(ii) Proposed Array of Crash Test Requirements
(iii) Location and Seating Procedures for 5th Percentile Adult Female Dummy
2. Tests for Requirements to Minimize the Risk to Infants, Children and Other Occupants from Injuries and Deaths Caused by Air Bags
a. Safety of Infants
b. Safety of Young Children
c. Safety of Small Teenage and Adult Drivers
C. Injury Criteria
1. Head Injury Criteria
2. Neck Injury Criteria
3. Thoracic Injury Criteria
4. Lower Extremity Injury Criteria
5. Other Criteria
D. Lead Time and Proposed Effective Date
1. Large Manufacturers
2. Small Manufacturers and Multi-stage Manufacturers
E. Availability of Original Equipment and Retrofit Manual On-Off Switches
F. Warning Labels and Consumer Information
G. Miscellaneous Issues
1. Selection of Child Restraints
2. Due Care Provision
3. Selection of Options
4. Relationship of Proposed New Injury Criteria to Existing Test Requirements
5. Time Parameters for Measuring Injury Criteria During Tests
6. Cruise Controls
7. Rescue Operations
8. Assessing Lower Extremity Injury Potential in Offset Deformable Crash Tests
9. Hybrid III Dummy Neck

H. Relationship between the NPRM, Comments on the NPRM and this SNPRM
IV. Costs and Benefits
V. Rulemaking Analyses and Notices
VI. Submission of Comments
Proposed Regulatory Text
Appendix A—Response to Petition
Appendix B—Glossary

I. Executive Summary

Since the early 1990's, NHTSA has been taking steps to reduce the risk that air bags will sometimes cause deaths, particularly to unrestrained children and small adults, and to maintain and improve the benefits of air bags. Our initial efforts to reduce the risks focused on a public education campaign to alert the public about the dangers of air bags to children in general and to infants in particular. We urged parents to place their children in the back seat whenever possible and to ensure that they were always properly restrained.

Later, to speed the redesigning and recertifying of air bags that reduce the risks to out-of-position occupants, we established a temporary option allowing vehicle manufacturers to certify their vehicles based on an unbelted sled test. The sled test is simpler, less expensive, and easier to meet than the pre-existing 30 mph unbelted crash test. Limited available data appear to indicate that these redesigned air bags have reduced the risks from air bags for the at-risk populations. However, it is not possible at this time to draw statistically significant conclusions about this.

There is a greater amount of data on the overall benefits of air bags. These data indicate that the redesigned air bags [1] provide essentially the same protection as that provided by earlier air bags. We have considered this information in light of agency tests showing that most of the tested vehicles, although certified to the sled tests, also passed the more stringent 30 mph unbelted crash test.

Manufacturers are developing an assortment of technologies, commonly referred to as advanced air bag technologies, to reduce the risks still further, for children, as well as adults. These technologies include dual-stage inflators which enable air bags to inflate with two different levels of power and which can be linked to various types of sensors including those that sense crash severity, belt use, and seat position (i.e., the location of a vehicle seat on its track). Occupant weight sensors and pattern sensors can be used to prevent an air bag from deploying at all in the presence of children.

These advanced air bag technologies are not just hypothetical possibilities; vehicle manufacturers are beginning to install them in an increasing variety of vehicles. The MY 1999 Hyundai Sonata has a weight sensor designed to prevent the passenger air bag from deploying unless a weight of more than 66 pounds is detected on the passenger seat. Honda introduced a dual stage inflator in its MY 1999 Acura. The MY 2000 Ford Taurus and Honda Accord, which are among the highest selling models in this country, have dual-stage air bags. Some luxury vehicles also have advanced air bag technologies. For example, Mercedes and BMW have dual-stage air bags in some of their MY 2000 cars. The MY 2000 Cadillac Seville has weight and pattern sensors in the passenger seat that work together to turn off the passenger air bag when children are present.

In the Transportation Equity Act for the 21st Century (TEA 21),[2] Congress mandated that we issue a final rule that requires the installation of air bags meeting, by means that include advanced air bag technologies, two goals: first, improving occupant protection for occupants of different sizes, regardless of whether they use their seat belts, and second, minimizing the risk to infants, children and other occupants of deaths and injuries caused by air bags. In accordance with TEA 21, we published a proposal in September 1998 to require the timely introduction of advanced air bags by all vehicle manufacturers and to establish procedures for testing the risk-reducing capabilities of the various types and combinations of advanced air bag technologies. Given the twin goals mandated by TEA 21, the proposal was necessarily both expansive and complex.

To meet the first goal of improving occupant protection, we proposed a variety of tests using belted and unbelted dummies. We also proposed adding a new dummy representing short-statured adult females. Included in these proposals was a proposal to terminate the unbelted sled test option so that vehicles with advanced air bags would be tested in unbelted barrier crashes. The sled test option was valuable as a short-run expedient to make it easier for manufacturers to bring redesigned air bags to market quickly. However, for the long-run purpose of testing air bags to ensure that they are, and that they will continue to be, effective in protecting people in real world crashes, the agency tentatively concluded that air bags should be evaluated in tests simulating those crashes. In particular, the agency proposed to rely on an unbelted 48 km/h (30 mph) rigid barrier crash test that approximates many of the real world crashes severe enough to pose significant risk of serious or fatal injury. Among the tests for belted occupants was a new 40 km/h (25 mph) offset deformable barrier test which was intended to evaluate the ability of crash sensors to sense soft pulse crashes.

With respect to the second goal of minimizing the risks of air bags, the very breadth of the different technological approaches for meeting that goal necessitated we make our proposal even more expansive and complex. We proposed to adopt in the final rule an array of tests to accommodate these different technological approaches and the different choices being made by individual manufacturers about which types of those technologies to adopt. In some cases, we were able to propose generic tests that are suitable for all advanced air bags. In other cases, however, we had to propose tests that are tailored to particular technologies and that would apply to only those air bags incorporating those technologies. This array of tests was intended to provide the manufacturers with technology and design flexibility, while providing the agency with effective means of evaluating the performance of all of the different advanced air bag systems.

The public comments and the agency research and analysis since our 1998 NPRM have enabled us to refine and in some cases simplify the proposed amendments that we are considering. In view of the importance of some of the changes, we have decided to publish this SNPRM to obtain further public comment before making any final decisions and issuing a final rule.

We have reduced the number of proposed dynamic and static tests, especially those relating to the proposed requirements for reducing the risks of air bags. We have reduced, from 14 to nine,[3] the number of proposed dynamic crash tests that would be applicable to all vehicles. We originally proposed that vehicles equipped with static air bag suppression systems (e.g., weight sensors and pattern sensors) be subject to being tested with any child restraint manufactured over a ten-year period.

[1] See footnote 15 for an explanation of the term, ''redesigned air bags.''

[2] The provisions in TEA 21 regarding air bags were contained in a part called The NHTSA Reauthorization Act of 1998. Given the greater public familiarity with the name TEA 21, we will refer to it, instead of the Reauthorization Act, in this document.

[3] The methodology for counting the number of proposed tests is explained later in this notice.

This would have created the possibility of testing with any one of several hundred different models of child restraints. Recognizing that, we solicited comments to aid us in identifying a much more limited number of specific models that would be representative of the array of available child restraints. Based on the public comments, we are now proposing to require that vehicles be able to meet the applicable requirements when tested with any one of a far more limited number of child restraints representing a cross-section of the restraints currently on the market.[4] We have also significantly reduced the number of positions in which test dummies or child restraints could be placed for testing a static suppression system. This was accomplished largely by eliminating positions that were substantially similar to other positions.

We are proposing to expressly provide that manufacturers may use children or small women instead of dummies in static tests to provide a basis for certifying compliance with the proposed tests for static suppression systems. These are simple tests in which the vehicle does not move, and the air bags cannot deploy. We are making this proposal because existing anthropomorphic test dummies were not designed to replicate the weight distribution of sitting humans in a manner that would adequately test all suppression technologies, e.g., pressure/pattern recognition sensors in the vehicle seat. Since the ultimate goal of our provisions concerning suppression systems is to achieve high reliability in detecting the presence of humans, the use of humans for the simple and limited purpose of testing the static suppression systems would make good sense. It is unnecessary to propose the use of infants for certification purposes, since all of the infant restraints should be detectable by any suppression system, regardless of whether they are occupied by a dummy or an infant.

We have eliminated the proposed test for dynamic automatic suppression systems (DASS) and the proposed full scale out-of-position test including pre-crash braking. Public comments and our further testing have led us to conclude that these tests would require enhancements to dummy biofidelity and test procedure development that we could not complete in time for this rulemaking. Further, the commenters did not suggest any workable, effective tests that we could propose as replacements.

Instead, we are taking a different approach that will provide flexibility to manufacturers that may wish in the future to certify advanced air bag systems incorporating a DASS to Standard No. 208. We believe that it is important in crafting our proposals regarding advanced air bags to facilitate efforts by the manufacturers to develop new and possibly better ways of reducing air bag risks. Accordingly, we are proposing to establish very general performance requirements for DASS and a special expedited petitioning and rulemaking process for considering procedures for testing advanced air bags incorporating one of these systems. Target time limits for each phase of such a rulemaking are proposed. Anyone wishing to market such advanced air bags could develop test procedures for demonstrating the compliance of their particular DASS with the performance requirements and submit those test procedures to the agency for its consideration. If the agency deems it appropriate to do so after evaluating the petition, the agency would publish a notice proposing to adopt the manufacturer's test procedure. After considering those comments, the agency would then decide whether the procedure should be added to Standard No. 208. If it decided to do so, and if the procedure were suitable for the DASS of any other vehicles, then the procedure could be used by those manufacturers of those vehicles as well as by the petitioning manufacturer. The agency intends to minimize the number of different test procedures that are adopted for DASS and to ensure ultimately that similar DASS are tested in the same way.

We have also decided to change our proposed injury criteria. We have decided to drop our proposal for a new combined thoracic index (CTI) and instead maintain separate limits for thoracic acceleration and deflection.[5] While CTI may be a better predictor of thoracic injury than chest acceleration and chest deflection independently, there is debate in the biomechanics community about the interpretation of the data. Consequently, we are pursuing further research to resolve the issues.

We are also proposing to change the existing head injury criterion (HIC) for the 50th percentile adult male dummy.[6] HIC is currently required not to exceed 1,000 and is evaluated over a 36 millisecond period. We are proposing to evaluate the HIC over a maximum 15 millisecond time interval with a requirement that it not exceed a maximum of 700. The agency historically has used a 36 millisecond time interval to measure HIC primarily because this method allowed the HIC measurement to indirectly capture risk of neck injury (until recently, a direct indication of neck injury risk was not a part of Standard 208). With the addition of specific neck injury criteria to Standard 208, the agency can switch to a 15 ms measurement interval which better corresponds to the underlying biomechanical research. We are proposing to change the HIC time interval to a maximum of 15 milliseconds for all dummy sizes and to revise the HIC limits by commensurate amounts, based on a scaling from the proposed new limit for the 50th percentile adult male dummy.

We are proposing a neck injury criteria (Nij) limit of 1.0, the calculation of which has been revised since the NPRM. In the NPRM, we requested comments on performance limits of Nij=1 and Nij=1.4. After considering the comments, the available biomechanical data, and testing which indicates that the more conservative or stringent value of 1.0 can be met in current production vehicles, we are proposing a limit of 1.0. The formulae underlying the calculation of Nij for smaller dummies incorporate scaling in recognition of the greater susceptibility of children to injury.

Finally, we are proposing two alternative crash tests for evaluating the effectiveness of an advanced air bag in protecting *unbelted* occupants in a relatively high speed crash. These tests would be conducted with dummies representing 50th percentile adult males as well as with ones representing 5th percentile adult females. We contemplate adopting one of these tests in a final rule, although we could decide to require elements of both alternatives. We believe that crashing a complete vehicle into a barrier is needed to address the type of situation for which air bags are designed: frontal crashes involving vehicles striking another object with sufficient force that the impact of an occupant with the steering wheel, dashboard, or other interior surface could result in severe injuries or death.

The first alternative is an unbelted rigid barrier test (perpendicular and up to ± 30 degrees oblique to perpendicular) with a maximum speed to be established in the final rule within the range of 40 to 48 km/h (25 to 30

[4] For the infant dummy, 19 different seats; for the 3-year-old dummy, 12 different seats; and for the 6-year-old dummy, 5 different seats. These figures are not additive since some seats are used for tests with two different dummies. A total of 24 seats (12 infant seats, 7 convertible seats, and 5 booster seats) would be used.

[5] The thorax is the chest area.

[6] HIC consists of a formula which utilizes data regarding the acceleration of the dummy head in vehicle tests to produce a number to determine compliance.

mph). This alternative is similar to the test included in our 1998 NPRM. The agency's intent in this rulemaking is to maximize, to the extent consistent with TEA 21, the protection that air bags offer in crashes potentially resulting in fatal injuries. Thus, the agency's preference is to establish such a test requirement at as high a severity as practicable. The 40 km/h (25 mph) lower end of the maximum test speed range is set forth for comment in this notice to ensure that commenters address a crash test recommended by the Alliance of Automobile Manufacturers in late August 1999. If we reduce the maximum speed to 40 km/h (25 mph) permanently, we might increase the maximum speed of the belted rigid barrier test from the current 48 km/h to 56 km/h (30 to 35 mph). The increase could go into effect after the TEA 21 phase-in period.

The second alternative is an unbelted offset deformable barrier test with a maximum speed to be established in the final rule within the range of 48 to 56 km/h (30 to 35 mph). The vehicle would have to meet the requirements both in tests with the driver side of the vehicle engaged with the barrier and in tests with the passenger side engaged. As in the case of the first alternative, if the agency selected this second alternative for the final rule, it would establish the maximum speed at as high a level as practicable, consistent with TEA 21, to maximize the improvement in occupant protection in potentially fatal crashes.

Regardless of which unbelted test or tests we ultimately adopt, we would retain a *belted* rigid barrier test with a maximum speed of 48 km/h (30 mph) with both 50th percentile adult male and 5th percentile adult female dummies during the TEA 21 phase-in period.[7] Further, we are continuing to propose an up-to-40 km/h (25 mph) offset deformable barrier test requirement, using belted 5th percentile adult female dummies.

We are also continuing to propose to eliminate provisions which allow original equipment (OE) and retrofit on-off switches under specified circumstances. Instead of proposing to phase these provisions out as advanced air bags are phased in, as proposed in the NPRM, we are proposing to allow OE and retrofit on-off switches to be installed under the same conditions that currently apply for all vehicles produced prior to September 1, 2005, the date by which all vehicles must have an advanced air bag system. We believe that by that time consumer confidence in the advanced air bag systems will be sufficiently strong to remove any desire for a manual on-off switch in vehicles produced with an advanced air bag.

NHTSA is proposing a replacement for the permanent sun visor label for vehicles certified as meeting the requirements of this proposed rule. The label would have new graphics and contain statements regarding belt use and seating children in the rear seat. In addition, we are proposing a new temporary label that states that the vehicle meets the new requirements for advanced air bags. This label would replace the existing temporary label and include statements regarding seat belt use and children in rear seats.

II. Background

A. Statutory Requirements

As part of TEA 21, Congress required us to issue an NPRM and final rule meeting two different, equally important goals:

> to *improve occupant protection* for occupants of different sizes, belted and unbelted, under Federal Motor Vehicle Safety Standard No. 208, *while minimizing the risk* to infants, children, and other occupants from injuries and deaths caused by air bags, *by means that include advanced air bags.*

(Emphasis added.)[8]

The Act provided that we were to issue the final rule by September 1, 1999. However, if we determined that the final rule could not be completed by that date, the Act provided that the final rule could be issued as late as March 1, 2000. Because of the complexity of the issues and the need to issue this SNPRM, we determined that the final rule could not be completed by September 1, 1999. Under the Act, the final rule must therefore be issued by March 1, 2000.

TEA 21 addressed various other issues, including the effective date for the final rule. A complete discussion of the Act's provisions is included in the 1998 NPRM. See 63 FR 49961.

B. Existing Air Bag Requirements

Pursuant to a provision in the Intermodal Surface Transportation Efficiency Act of 1991 (ISTEA), Standard No. 208 requires all passenger cars and light trucks to provide automatic protection by means of air bags.[9]

The automatic protection requirements are performance requirements. The standard does not specify the design of an air bag. Instead, when tested under specified test conditions, vehicles must meet specified limits for injury criteria, including criteria for the head, chest and thighs, measured on 50th percentile adult male test dummies.

Until recently, these criteria limits had to be met for air bag-equipped vehicles in barrier crashes at speeds up to 48 km/h (30 mph), both with the dummies belted and with them unbelted. However, on March 19, 1997, we published a final rule providing manufacturers with the option of certifying the air bag performance of their vehicles with an unbelted dummy in a sled test incorporating a 125 millisecond standardized crash pulse instead of in a vehicle-to-barrier crash test. We made this amendment primarily to expedite manufacturer efforts to reduce the force of air bags as they deploy.

Under the March 1997 final rule, the sled test option was scheduled to terminate on September 1, 2001. We believed there was no need to permanently reduce Standard No. 208's performance requirements, since a variety of longer term alternatives were available to manufacturers to address adverse effects of air bags.

The September 1, 2001 termination date for the sled test option was superseded by a provision in TEA 21. In a paragraph titled ''Coordination of Effective Dates,'' the Act provides that the unbelted sled test option ''shall remain in effect unless and until changed by [the final rule for advanced air bags].''

C. September 1998 NPRM

Pursuant to TEA 21, on September 18, 1998, we published in the **Federal Register** (63 FR 49958) a notice of proposed rulemaking (NPRM) to upgrade Standard No. 208, *Occupant Crash Protection,* to require vehicles to

[7] As noted above, if we permanently reduce the maximum test speed for the unbelted rigid barrier test to 40 km/h (25 mph), we might increase the maximum test speed for the belted rigid barrier test to 56 km/h (35 mph), effective sometime after that phase-in period.

[8] The treatment by this provision of the twin goals and of the protection of belted and unbelted occupants differs significantly from the treatment that would have been given them by an earlier version of this mandate. That earlier version would have established a hierarchy of priorities, placing minimizing the risks of air bags above improving the protection they provide, and placing the protection of belted occupants above the protection of unbelted occupants.

[9] TEA 21 is thus the second in a succession of Congressional acts modifying the Department's 1984 final rule regarding automatic protection. That final rule mandated automatic protection, but explicitly provided discretion with respect to the type of automatic protection (automatic seat belts and air bags), and implicitly provided discretion with respect to the use of advanced air bag technologies. ISTEA eliminated the first area of discretion, mandating the installation of air bags. TEA 21 eliminates the second area of discretion, mandating the use of advanced air bag technologies.

be equipped with advanced air bags that meet new, more rigorous performance requirements. The advanced air bags would be required in some new passenger cars and light trucks beginning September 1, 2002, and in all new cars and light trucks beginning September 1, 2005.

As we explained in that document, air bags have been shown to be highly effective in saving lives. They reduce fatalities in frontal crashes by about 30 percent. However, they also sometimes cause fatalities to infants in rear facing child safety seats and out-of-position occupants.

In the 1998 NPRM, we presented a full discussion of the safety issues related to air bags. We also presented a discussion of our comprehensive plan to address air bag fatalities, which includes requiring advanced air bags as a long-term solution.

We proposed to add a new set of requirements to prevent air bags from causing injuries and to improve the protection that they provide occupants in frontal crashes. There would be several new performance requirements to ensure that the advanced air bags do not pose unreasonable risks to out-of-position occupants.

The NPRM gave alternative options for complying with those requirements so that vehicle manufacturers would be free to choose from a variety of effective technological solutions and to develop new ones if they so desire. With this flexibility, they could use technologies that modulate or otherwise control air bag deployment so deploying air bags do not cause serious injuries or that prevent air bag deployment if children or out-of-position occupants are present.

To ensure that the new air bags are designed to avoid causing injury to a broad array of occupants, we proposed test requirements using dummies representing 12-month-old, 3-year-old and 6-year-old children, and 5th percentile adult females, as well as tests representing 50th percentile adult males. We noted that many of the proposed test procedures were new, and specifically requested comments with respect to their suitability for measuring the performance of the various advanced systems under development.

We also proposed requirements to ensure that the new air bags are designed to cushion and protect an array of belted and unbelted occupants, including teenagers and small women. The standard's current dynamic crash test requirements specify the use of 50th percentile adult male dummies only. We proposed also to specify use of 5th percentile adult female dummies in dynamic crash tests. The weight and size of these dummies are representative of not only small women, but also many teenagers.

In addition to the existing rigid barrier test, representing a relatively ''stiff'' or ''hard'' pulse crash in perpendicular tests and a more moderate pulse crash in oblique tests, we proposed to add a deformable barrier crash test, representing a relatively ''soft'' pulse crash. This proposed new crash test requirement was intended to ensure that air bag systems are designed so that they do not deploy too late. Some current air bags deploy relatively late in certain types of crashes. If an air bag deploys too late, normally seated occupants may move too close to the air bag before it starts to inflate. In such a situation, the air bag is less likely to protect the occupant and may pose a risk to the occupant. We proposed to use 5th percentile adult female dummies in this test.

We also proposed to phase out the unbelted sled test option as we phased in requirements for advanced air bags. We acknowledged that the sled test option has been an expedient and useful temporary measure to ensure that the vehicle manufacturers could quickly redesign all of their air bags and to help ensure that some protection would continue to be provided. Nevertheless, we stated that we did not consider sled testing to be an adequate long-term means of assessing the extent of occupant protection that a vehicle and its air bag will afford occupants in the real world.

Finally, we proposed new and/or upgraded injury criteria for each of the proposed new test requirements, and also proposed to upgrade some of the injury criteria for the standard's existing test requirements.

D. Public Comments

We received comments from a wide range of interested persons including vehicle manufacturers, air bag manufacturers, insurance companies, public interest groups, academia, and government. Commenters generally supported the goals mandated by TEA 21—improving the benefits of air bags, while minimizing risks from air bags—but expressed widely differing views as to how to accomplish those goals.

In this section of the preamble, we summarize the comments, particularly those relating to the major issues. Because of the large number of public comments, we have included a representative sample of the comments and the commenters who made them.

1. Tests for Requirements To Improve Occupant Protection for Different Size Occupants, Belted and Unbelted

a. Belted Rigid Barrier Test.

A number of vehicle manufacturers opposed adding a belted rigid barrier test using 5th percentile adult female dummies. These commenters argued that this particular test is redundant given the existing belted barrier test using 50th percentile adult male dummies and the other proposed tests using 5th percentile adult female dummies.

The comments of the vehicle manufacturers on this issue were reflective of a more general theme running through their comments, i.e., they believed the NPRM was overly complex and included too many tests.

b. Unbelted Rigid Barrier Test.

Commenters had sharply different views on our proposal to phase out the unbelted sled test option and reinstate the up-to-48 km/h (30 mph) unbelted rigid barrier test. Many commenters, including all vehicle manufacturers and the Insurance Institute for Highway Safety (IIHS), strongly opposed reinstating the unbelted rigid barrier test. These commenters generally argued that reinstating this test would necessitate a return to ''overly aggressive'' air bags and that the test is not representative of typical real world crashes. Vehicle manufacturers requested that the sled test option remain available for the long term. On the issue of possible alternative unbelted tests, IIHS suggested that, if we wish to phase out the sled test, we should consider replacing it with a 56 km/h (35 mph) offset deformable barrier test.

On August 31, 1999, however, vehicle manufacturers and their trade associations, Alliance and AIAM, announced to the agency a recently reached consensus recommendation for an unbelted crash test. The industry recommended an unbelted rigid barrier crash test at 40 km/h (25 mph) using both 50th percentile adult male dummies and 5th percentile adult female dummies. The test would be conducted in the perpendicular mode only, i.e., there would be no oblique tests. No supporting data or written analyses were submitted to the agency at that meeting.

Other commenters, including a number of advocacy groups, argued that the up-to-48 km/h (30 mph) unbelted rigid barrier test is representative of a significant portion of real world crashes, and that improvements in vehicle and air bag designs will enable manufacturers to meet the test without

safety tradeoffs. Public Citizen argued that while the manufacturers attempt to blame the unbelted barrier test for the deaths and injuries caused by air bags, a closer examination suggests that manufacturers' design selection is the real cause of injuries. It further argued that TEA 21 contemplates that neither belted occupants nor unbelted occupants be favored under Standard 208 and that both deserve safe and effective protection by air bags.

c. Up-to-40 km/h (25 mph) Offset Deformable Barrier Test.

Commenters' views on the proposed up-to-25-mph belted offset deformable barrier test were mixed, but mostly supportive. Many commenters, including several advocacy groups and a number of vehicle manufacturers, supported the addition of an offset deformable barrier test.

Some vehicle manufacturers requested that the test be conducted only with the driver's side engaged, instead of with either side engaged as proposed in the NPRM. The Association of International Automobile Manufacturers (AIAM) stated that a test with the driver's side engaged would more likely produce ''worst case'' driver out-of-position locations and possible driver-side intrusion, and that a passenger side offset test would be redundant. Another suggestion made by some vehicle manufacturers was to conduct the test only at 40 km/h (25 mph), rather than at speeds up to 40 km/h (25 mph).

General Motors (GM) stated that it agreed with the addition of the offset deformable barrier test only if the unbelted sled test option remained in effect. GM stated that the offset deformable barrier test augments the sled test by addressing the crash sensing aspects of performance.

DaimlerChrysler argued that the addition of a 40 km/h (25 mph) belted offset deformable barrier test for the 5th percentile female is unnecessary in light of future ''depowered'' and/or advanced air bags. That commenter stated that injury risks to small occupants sitting near the driver air bag are adequately assessed using the proposed out-of-position, low-risk deployment tests, which it endorses.

Some vehicle manufacturers indicated that air bags might be designed so that they would not deploy in 40 km/h (25 mph) offset crashes.

2. Tests for Requirements To Minimize the Risk to Infants, Children and Other Occupants From Injuries and Deaths Caused by Air Bags

a. Tests to minimize risks to infants.

While commenters generally supported adding tests for infant safety, they raised a number of issues about the proposed tests.

The vehicle manufacturers opposed the proposal to test with any infant seat manufactured during approximately the 10 years prior to the date of vehicle manufacture, citing practicability concerns. A number of vehicle manufacturers also argued that the agency proposed too many test positions. Commenters raised numerous concerns about the specific details of the proposed test procedures.

Some commenters suggested that the agency require suppression in the presence of infants, instead of permitting a low-risk deployment option as well. These commenters cited uncertainties related to injury risk for infants and the lack of infant biomechanical data. They further questioned if there is any benefit from air bag deployments for infants.

A number of commenters also raised concerns about whether suppression devices will be ready in time to meet the requirements for advanced air bags, and how reliable they will be.

b. Tests to minimize risks to children.

Commenters' views on the proposed tests for child safety were similar to those for infant safety. While supportive of adding tests in this area, vehicle manufacturers raised concerns about the number of child restraints, number of tests, and, in some cases, availability of reliable suppression devices.

A number of commenters raised concerns about whether current child dummies are sufficiently human-like to be appropriate test devices for some of the advanced technologies under development. By way of example, concern was expressed that suppression devices that work by sensing the distributed weight pattern of a child on a seat may not recognize the pattern of a test dummy.

Commenters raised numerous technical issues concerning the proposed options for automatic suppression features that suppress the air bag when an occupant is out-of-position (S27 of the regulatory text proposed in the NPRM). Some commenters argued that the proposal to test automatic suppression features using a moving headform is not appropriate for some of the devices under development, such as sensors designed to track the full body of the occupant and not just the head. Others expressed difficulties related to defining the size, shape, and orientation of the suppression plane, as well as the maximum response time of the system.

Commenters also raised numerous technical issues concerning the dynamic out-of-position test (S29 of the regulatory text proposed in the NPRM). Some commenters stated that the dummy trajectories resulting in this test are unrealistic, and that the proposed vehicle crash test is neither repeatable nor reproducible. Others stated that the dummies do not move close enough to the air bag prior to deployment to represent a worst case out-of-position situation.

c. Tests to minimize risks to adults.

Commenters generally supported adding a low-risk deployment test using a 5th percentile adult female dummy at the driver seating position, although they raised a number of issues about the proposed test procedure. GM recommended that the driver low risk deployment test be made into a component test, outside of the vehicle.

Commenters also raised the same concerns about the proposed options for automatic suppression features that suppress the air bag when an occupant is out-of-position (S27) and for the dynamic out-of-position test (S29) as they did in the context of tests to minimize risks to children.

GM recommended that the agency also propose a low-risk deployment test using a 5th percentile adult female dummy at the passenger position. That company noted that if manufacturers selected the suppression (presence) option for child safety, there would be no out-of-position test limiting aggressivity for adult passengers.

3. Injury Criteria

Commenters raised numerous highly technical issues concerning several of proposed injury criteria and performance limits. Some commenters questioned the biomechanical basis for certain of the proposed new injury criteria. The AAMA suggested essentially a completely revised set of injury criteria.

E. Events Since September 1998

A number of events relevant to this rulemaking have occurred since publication of the NPRM in September 1998. First, the development of advanced air bags by suppliers and vehicle manufacturers has continued.

Acura introduced dual stage passenger side air bags in its MY 1999 Acura RL. According to Acura's press release, ''(t)he dual stage air bags were designed to reduce the inflation speed to help protect children or small-framed adults. In a low speed collision, the dual-stage inflator system is triggered in sequence resulting in slower air bag deployment with less initial force. In

higher speed collisions, both inflators operate simultaneously for full immediate inflation. The air bag system logic also controls the operation of the seat belt pretensioners. A new feature of the system detects whether the passenger's seat belt is fastened. If the seat belt is not fastened, the air bag deploys at full force at a lower collision speed to help offer more protection to the unbelted occupant.''

Ford publicly announced in January 1999 that it will introduce advanced technology enabling its cars and trucks to analyze crash conditions and to use the results of the analyses in activating safety devices to better protect a range of occupants in a variety of frontal crash situations. Ford stated that its Advanced Restraints System features nearly a dozen technologically advanced components that work together to give front-seat occupants significantly enhanced protection during frontal crashes, taking into account their seating position, safety belt use and crash severity. That company indicated that elements of the system, which features technologies such as crash severity sensors, a driver-seat position sensor, a passenger weight sensor, safety belt usage sensors, dual-stage inflating air bags, safety belt pretensioners and energy management retractors, will debut in vehicles beginning in the 1999 calendar year. Ford stated that the company will introduce these new technologies on new and significantly freshened models until all its passenger cars, trucks and sport utility vehicles have the complete Advanced Restraints System.

GM publicly announced in February 1999 that it will introduce technology in MY 2000 that is designed to detect the presence of a small child in the front passenger seat and suppress the deployment of the passenger frontal air bag in the event of a frontal crash. GM stated that weight-based sensors, coupled with pattern recognition technology, will distinguish between a child and a small adult female whose weight may be similar to a large child restrained in a child safety seat. If the front passenger seat is occupied by a small child, whether in a child safety seat or not, GM said that the air bag will not deploy. GM stated that it will introduce this technology on the Cadillac Seville in the 2000 calendar year, and that it has a roll-out plan to extend this technology throughout its product line.

We have received more detailed confidential information from GM and Ford concerning their plans, as well as confidential information from other auto manufacturers concerning their latest plans to introduce various advanced technologies. We have also received confidential information from suppliers.

Second, in April 1999, we held a public technical workshop concerning biomechanical injury criteria. The purpose of the workshop was to provide an additional opportunity for a continuing dialog with the biomechanics community and the public to assure that we considered appropriate injury criteria.

Third, we have analyzed the public comments and also conducted additional testing. We conducted additional tests of current vehicles with redesigned air bags to determine how they perform in 48 km/h (30 mph) rigid barrier crash tests. We selected vehicles that varied by class, stiffness, and manufacturer. We also used both 5th percentile adult female dummies and 50th percentile adult male dummies, belted and unbelted. We also conducted tests of several current vehicles with redesigned air bags to determine how they perform in 40 km/h (25 mph) rigid barrier crash tests, 48 km/h (30 mph) 30 degree right/left angular barrier tests (belted/unbelted), 56 km/h (35 mph) left/right side offset fixed deformable barrier crash tests, low speed 24 to 40 km/h (15 to 25 mph) offset deformable crash tests and static out-of-position tests. We also conducted sled tests at different crash severities with 95th percentile adult male dummies and MY 1999 and MY 1997 replacement air bags.

Fourth, we have continued to analyze available data to see how redesigned air bags are performing in the real world. We analyzed 1996 to 1998 Fatality Analysis Reporting System (FARS) data and found essentially the same number of fatalities in frontal impacts for MY 1996 vehicles in 1996 FARS (730), as in MY 1997 vehicles in 1997 FARS (776), as in MY 1998 vehicles in 1998 FARS (732). The fatality rates per million registered vehicles indicate that MY 1996 (56 per million registered vehicles) had essentially the same fatality rates as MY 1997 vehicles (55), while MY 1998 vehicles had a lower fatality rate (50). After controlling for safety belt use rates, that is, estimating the number of fatalities in each year if all three years had the same 1998 usage rate, the fatality rates per million registered vehicles were the same for MY 1996 and MY 1997 (53), while MY 1998 had a lower fatality rate (50). Since an estimated 87 percent of MY 1998 vehicles have redesigned air bags, this suggests that there is essentially the same or slightly better protection provided by the redesigned air bags compared to pre-MY 1998 air bags. In assessing the significance of this information, we will consider the agency tests in which most of the tested vehicles, although certified to the sled tests, met or exceeded the historical performance requirements of the 48 km/h (30 mph) rigid barrier crash test.

Another analysis compared the percent of fatalities in frontal impacts to all impacts for MY 1996 vehicles in calendar year 1996 (38.9%), to MY 1997 vehicles in calendar year 1997 (41.3%), and to MY 1998 vehicles in the first 6-months of calendar year 1998 (39.6%). As noted above, most of the MY 1998 vehicles have redesigned air bags. No statistically significant difference was found between the three sets of data. Again, this implies that the overall protection provided by the redesigned air bags is essentially the same as that provided by pre-MY 1998 air bags.

Fifth, on August 31, 1999, and again on September 14, 1999, the vehicle manufacturers and their trade associations met with the agency and presented a consensus recommendation for an unbelted crash test. The industry recommended an unbelted rigid barrier crash test at 40 km/h (25 mph) using both 50th percentile adult male dummies and 5th percentile adult female dummies. A letter regarding this recommendation was received from the Alliance (dated September 2, 1999).[10]

In a letter dated September 16, 1999, an assortment of commenters, including vehicle manufacturers, vehicle insurers, the American Automobile Association, the National Automobile Dealers Association, the American International Automobile Dealers Association, the American Trauma Society, the National Safety Council, IIHS, and the National Association of Governors' Highway Safety Representatives, opposed a return to the 30 mph unbelted rigid barrier test. This letter argued that a return to this test would require an overall increase in air bag maximum energy levels with a concomitant increase in risk. No supporting data or analysis

[10] This letter recommended that the agency adopt the following unbelted barrier test as an alternative to the current unbelted sled test:

A 40 km/h (25 mph) unbelted rigid barrier, using 5th percentile adult female dummies and 50th percentile adult male dummies, and the injury criteria recommended by AAMA in its Dec 98 submission to agency and endorsed by the Alliance in 1999. The test would be conducted perpendicularly only at 25 mph (w/ allowance for test variability) only, *not* up to 25 mph. The test would be fully phased-in during TEA 21 phase-in period (MY's 2003–2006). Further, optional early compliance should be allowed. Upon publication of final rule, vehicle manufacturers should be allowed to comply with this recommended test (as opposed to either the sled test or 30 mph unbelted rigid barrier test), even in the absence of compliance with requirements intended to reduce the risks associated with air bags.

accompanied the letter. The letter also urged that NHTSA focus this rulemaking on reducing the risk of air bags to children and others, especially in low speed crashes, as compared to the agency's attempting to increase air bag-related benefits for unbelted occupants in higher speed crashes.

In a letter dated September 29, 1999, Public Citizen, the Center for Auto Safety, and Parents for Safer Air Bags stated that they were ''concerned by news reports that a consortium of vehicle manufacturers and insurers is pressing the agency not to reinstate the 30 mph barrier crash test for unbelted occupants.'' These organizations argued that the industry's position is based on the erroneous premise that protection of unbelted occupants in high-speed collisions causes the bags to be hazardous to small occupants in low-speed collisions.[11] They also argued that abandonment of the unbelted 30 mph unbelted test would obviate the very purpose of the present rulemaking, the development and introduction of advanced air bags, and result in the use of generic ''lowest common denominator'' systems that can be readily be fitted in any vehicle but which seriously compromise safety. The letter stated that it should not be forgotten that air bags were originally conceived to protect unbelted occupants in horrific frontal collisions, and that this remains their principal efficacy to this day.

III. SNPRM for Advanced Air Bags

A. Introduction

Our primary goals in this rulemaking continue to be those set for us by TEA 21, i.e., to improve occupant protection for occupants of different sizes, belted and unbelted, while minimizing the risk to infants, children, and other occupants from injuries and deaths caused by air bags. Further, we are seeking to ensure that the needed improvements in occupant protection are made in accordance with the statutory implementation schedule. After carefully reviewing the comments on the NPRM and other available information, we have developed an SNPRM to accomplish these goals.

In developing this SNPRM, we focused on picking the most appropriate tests so that we could reduce the number of originally proposed tests without significantly affecting the benefits of the NPRM. We were persuaded by the commenters that reducing the amount of testing was important, given resource limitations, and the costs to manufacturers associated with certifying vehicles to such a large number of new test requirements. At the same time, we wanted to be sure that the SNPRM includes sufficient tests to ensure that air bags are redesigned to meet the goals mandated by TEA 21.

Given the continued debate over what requirements should be relied upon to ensure protection to unbelted occupants, we also wanted to be sure that we have considered and received the benefit of public comments on the various alternative approaches reflecting the views and information now available to us.

The most significant differences between the NPRM and the SNPRM can be summarized as follows:

- *Two alternative unbelted tests.* While we proposed one unbelted test in the NPRM, an up-to-48 km/h (30 mph) rigid barrier test, we are proposing and seeking comments on two alternative unbelted tests in this SNPRM. The first alternative is an unbelted rigid barrier test with a minimum speed of 29 km/h (18 mph) and a maximum speed to be established within the range of 40 to 48 km/h (25 to 30 mph). Within this alternative, the potential exists for a phase-in sequence in which the maximum speed would initially be set at 40 km/h (25 mph) to provide vehicle manufacturers additional flexibility when they are introducing advanced air bags during the phase-in. Under this phase-in sequence, the final rule could provide that a maximum speed of 48 km/h (30 mph) would apply after a reasonable period of time. If we reduce the maximum speed to 40 km/h (25 mph) permanently, we might also increase the maximum speed of the belted rigid barrier test from the current 48 km/h to 56 km/h (30 to 35 mph). The second alternative is an unbelted offset deformable barrier test with a minimum speed of 35 km/h (22 mph) and a maximum speed to be established within the range of 48 to 56 km/h (30 to 35 mph). The latter alternative was developed in response to a recommendation made by IIHS in its comment on the NPRM.[12] We are proposing the 29 and 35 km/h (18 and 22 mph) lower ends of the ranges of test speeds because we want to be sure that the standard does not inadvertently create incentives to push deployment thresholds downward, i.e., cause air bags to be deployed at lower speeds.
- *Possible higher speed belted rigid barrier test.* We are also specifically requesting comment on a similar option for the belted test requirement, in which a 48 km/h (30 mph) test would be in effect through the TEA 21 phase-in, to be subsequently replaced with a 56 km/h (35 mph) test, using both 5th percentile adult female and 50th percentile adult male dummies.
- *Reduced number of tests.* We have significantly reduced the total number of proposed tests. In a number of situations, we have tentatively concluded that a proposed test could be deleted because the performance we sought to secure by means of that test would largely be assured by one or more of the other tests.
- *Reduced offset testing.* The proposed up-to-40 km/h (25 mph) offset crash test using belted 5th percentile adult female dummies would be conducted only with the driver side of the vehicle engaged, instead of both with the driver side and with the passenger side engaged.
- *Ensuring that certain static suppression systems can detect real children and adults.* For our proposed static test requirements for systems (*e.g.*, weight sensors) which suppress air bags in the presence of infants and children, we are proposing a new option which would permit manufacturers to certify to requirements referencing children, instead of 3-year-old and 6-year-old child dummies, in a stationary vehicle to test the suppression systems. (This option would not apply to systems designed to suppress the air bags only when an infant is present.) Adult human beings could also be used in the place of 5th percentile adult female dummies for the portions of those static test requirements which make sure that the air bag is activated for adults. Steps would be taken to ensure the safety of all subjects used for these tests.
- *Reduced number of child restraints used for testing suppression systems.* Instead of requiring manufacturers to assure compliance of a vehicle in tests using any child restraint which was manufactured for sale in the United States any time during a specified period prior to the manufacture of the vehicle, we would require them to assure compliance using any child restraint on a relatively short list of specific child restraint models. Those models would be chosen to be representative of the array of available child restraints. The list would be

[11] The letter argued that the safety record of many well-designed air bag systems over a ten year period belies this premise. The letter stated that a variety of design features allow for protection of unbelted occupants in severe crashes without imposing significant inflation risks in low-speed collisions, and cited vehicle structures with a longer crash pulse, variable inflation forces based on crash severity, higher thresholds (including ''dual thresholds'') and laterally-biased inflation.

[12] IIHS's views have changed since making that recommendation. Its current views are discussed below.

updated from time to time to reflect changes in the types of available child restraints.

• *Modified requirements for systems that suppress the air bag for out-of-position occupants.* We have significantly modified the proposed requirements for systems that suppress the air bag when an occupant is out of position during a crash. In the NPRM, we proposed a single test procedure for all types of such suppression systems. We were persuaded by the commenters that the proposed test procedure was not appropriate for some of the systems that are currently under development. Because we did not have sufficient information or prototype hardware to develop a new test procedure, and because no one test procedure may be appropriate for a number of comparably effective suppression technologies, we are proposing a provision that would permit manufacturers or others to petition the agency to establish technology-specific test procedures under an expedited rulemaking process.

• *No full scale dynamic out-of-position test requirements.* We are eliminating from this rulemaking the proposed option for full scale dynamic out-of-position test requirements (the option which included pre-impact braking as part of the test procedure). We were persuaded by the commenters that the proposed test procedure is not workable at this time. Moreover, we believe this option is unnecessary at this time, since other options are available for the range of effective technologies we understand to be under development.

The existing tests that would be retained as well as those proposed in this SNPRM are identified in Figures 1a, 1b and 2, below. Figures 1a and 1b show the two alternative sets of test requirements to improve occupant protection for different size occupants, belted and unbelted, in moderate to high speed crashes. Figure 2 shows test requirements to minimize the risk to infants, children, and other occupants from injuries and deaths caused by air bags, especially in low speed crashes.

BILLING CODE 4910–59–P

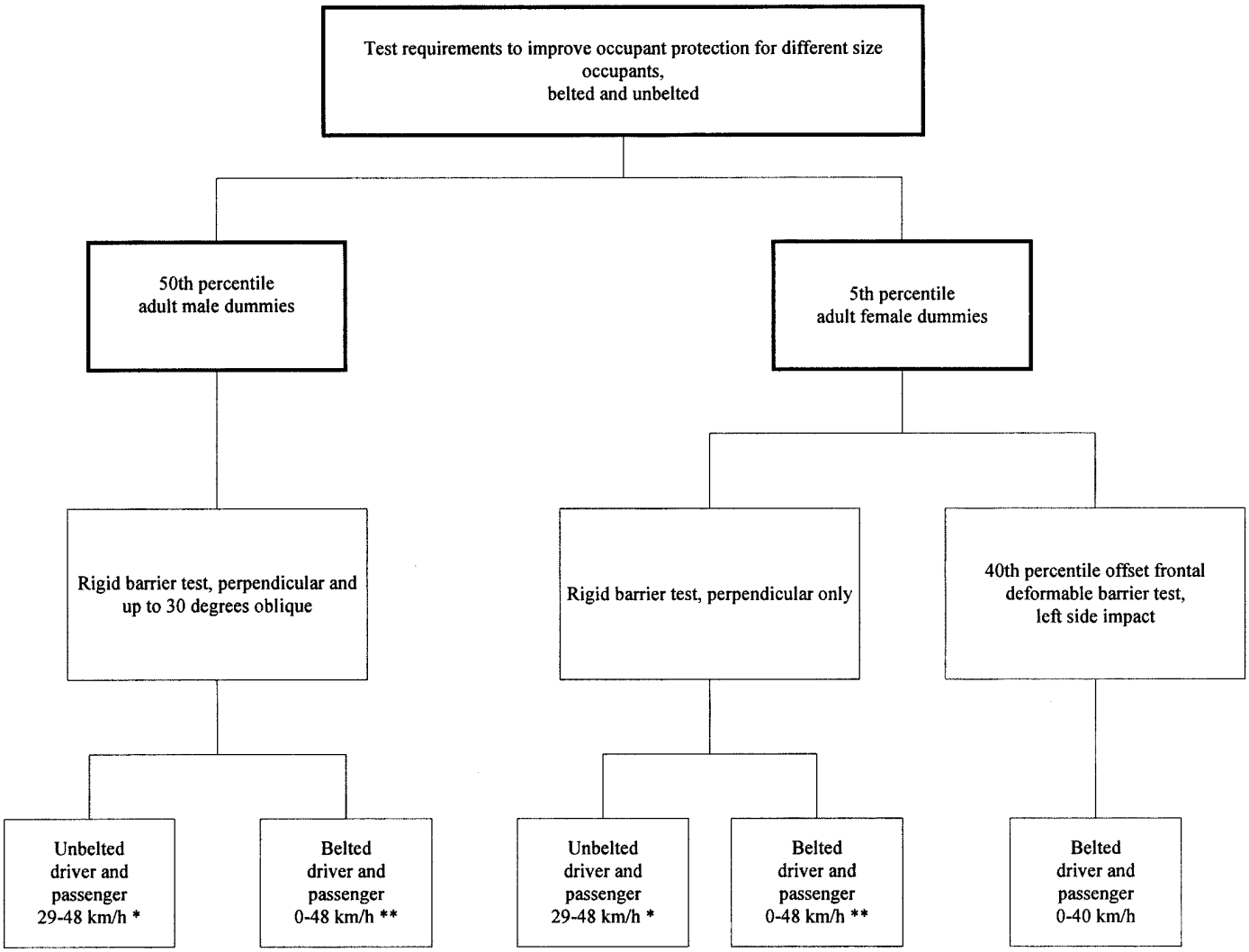

* The maximum speed would be established within the range of 40 to 48 km/h (25 to 30 mph)

** The maximum speed might be established at 56 km/h (35 mph) if the maximum speed for the unbelted rigid barrier test were permanently reduced to 40 km/h (25 mph)

Figure 1a. Alternative 1: Test Requirements to Improve Occupant Protection for Different Size Occupants, Belted and Unbelted

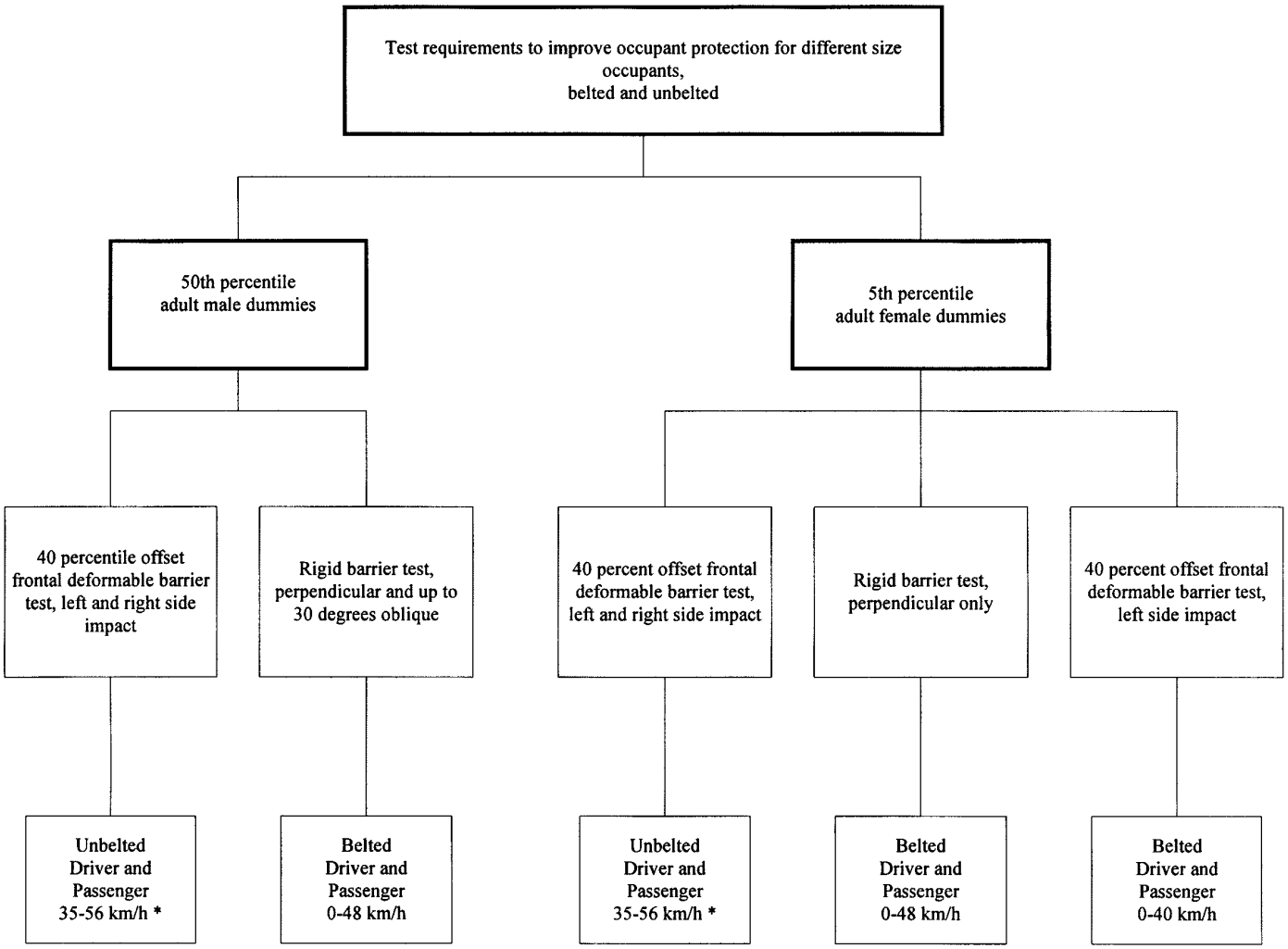

* The maximum speed would be established within the range of 48 to 56 km/h (30 to 35 mph)

Figure 1b. Alternative 2: Test Requirements to Improve Occupant Protection for Different Size Occupants, Belted and Unbelted

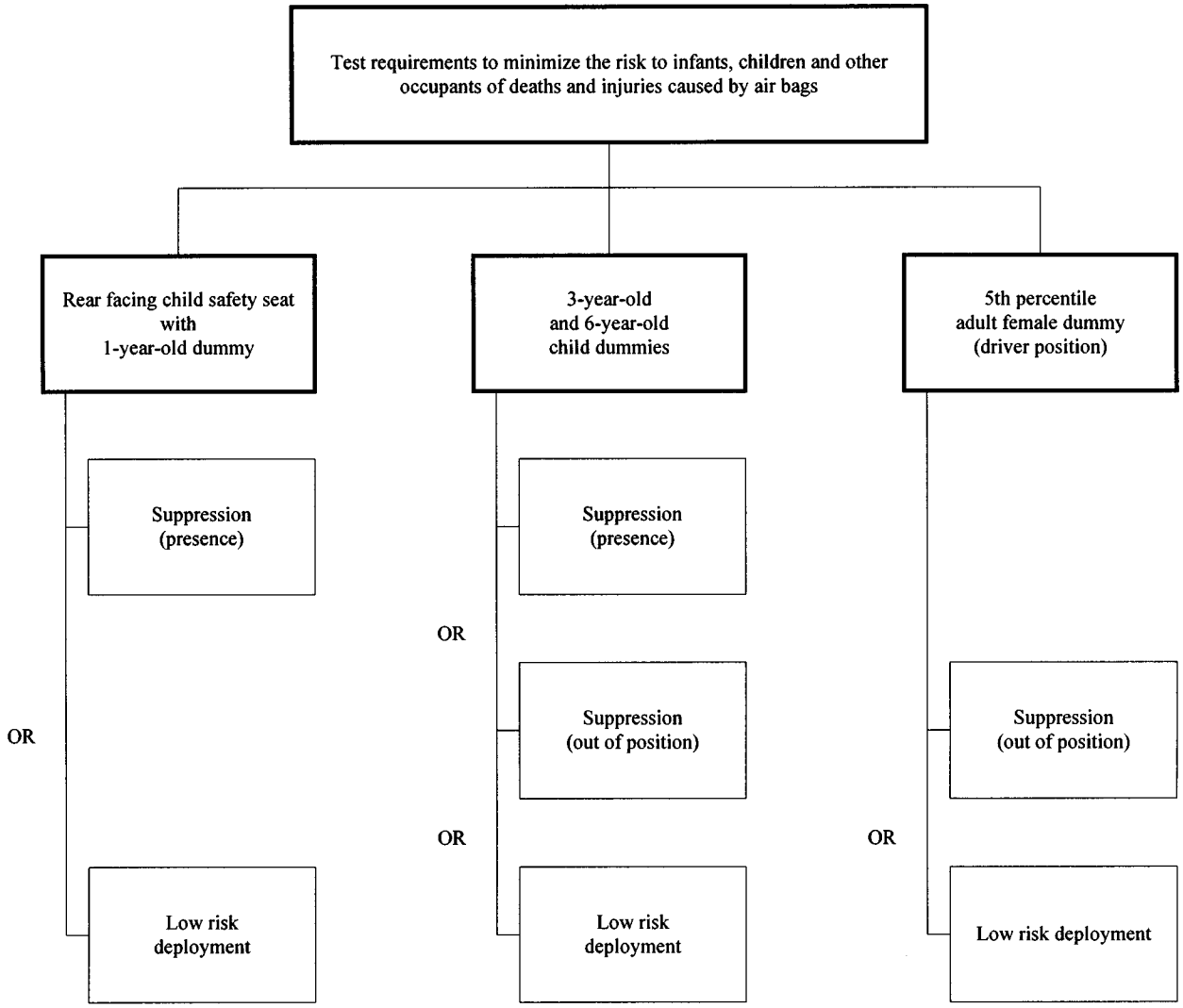

Figure 2. Test Requirements to Minimize the Risk to Infants, Children, and Other Occupants from Injuries and Deaths Caused by Air Bags

BILLING CODE 4910–59–C

A discussion of the specific proposed test requirements follows. We will first discuss requirements to improve protection for different size occupants, belted and unbelted, and will then discuss requirements to minimize risks from air bags. We also discuss in detail the major differences from the NPRM.

B. Existing and Proposed Test Requirements

1. Tests for Requirements To Improve Occupant Protection for Different Size Occupants, Belted and Unbelted

a. September 1998 NPRM.

In the NPRM, we proposed test requirements to improve occupant protection for different size occupants, belted and unbelted. The proposed requirements included rigid barrier tests and offset deformable barrier tests.

Under the proposed rigid barrier test requirements in the NPRM, vehicles would have been required to meet injury criteria performance limits, including ones for the head, neck, chest, and femurs, measured on 50th percentile adult male and 5th percentile adult female test dummies during rigid barrier crash tests at any speed up to 48 km/h (30 mph) and over the range of vehicle-to-crash-barrier angles from -30 degrees to +30 degrees. Tests with 50th percentile adult male dummies would be conducted with the vehicle seat in the mid-track position; tests with 5th percentile adult female dummies would be conducted with the vehicle seats in the full forward position.[13] Vehicles were to meet the injury criteria with belted and unbelted dummies. The purpose of the rigid barrier tests was to help ensure that vehicles protect different size occupants, belted and unbelted, from risk of serious or fatal injury in moderate to high speed crashes.

Under the proposed offset deformable barrier test requirements, vehicles would have been required to meet injury criteria performance limits during an up-to-40 km/h (25 mph) frontal offset deformable barrier test, using belted 5th percentile adult female dummies. The frontal offset test would have been conducted with either the driver side of the vehicle or the passenger side of the vehicle engaged with the barrier. The purpose of this test was to help ensure that vehicle manufacturers design their crash sensing and software systems to adequately address soft and long duration crash pulses.

Our NPRM would have required as many as a total of 14 crash tests to improve occupant protection. This number is based on counting each rigid barrier test specifying use of a particular dummy as three tests, reflecting the assumption that, for typical vehicle and air bag designs, there would be three worst case conditions: 48 km/h (30 mph) at -30 degrees, 48 km/h (30 mph) at 0 degrees, and 48 km/h (30 mph) at +30 degrees.[14]

Our proposed requirements for improving occupant protection in potentially fatal crashes differed from the existing Standard No. 208 in several important respects.

First, vehicles would for the first time be required to be certified to crash test requirements using 5th percentile adult female dummies, which would be seated in the full forward seat track position. Historically, the standard has only specified the use of 50th percentile adult male dummies seated further back.

Second, vehicles would be required for the first time to meet neck injury criteria performance limits in a crash test. Neck injuries are a particular concern for persons sitting close to the air bag.

Third, vehicles would for the first time be required to comply with injury criteria limits in a 40 km/h (25 mph) frontal offset deformable barrier test with belted 5th percentile adult female dummies. The only frontal crash tests previously specified by the standard were rigid barrier tests.

Fourth, we proposed to phase out the unbelted sled test option and return to the up-to-48 km/h (30 mph) unbelted rigid barrier test requirement.[15] However, it would be more than simply returning to the previous test requirement, since the unbelted rigid barrier test would now be conducted with 5th percentile adult female dummies as well as 50th percentile adult male dummies. In addition, we proposed added injury criteria for the chest and neck.

We proposed to phase out the sled test option as we phased in the requirements for advanced air bags. We stated that while we believe the sled test option has been an expedient and useful temporary measure to ensure that the vehicle manufacturers could quickly redesign all of their air bags and to help ensure that some protection would continue to be provided by air bags, we did not consider sled testing to be an adequate long-term means of assessing the extent of occupant protection that a vehicle and its air bag will afford occupants in real world crashes.

We noted that the sled test, first, does not address vehicle factors that can significantly affect the level of protection provided in the real world and, second, is not representative of a significant number of potentially fatal real world crashes. Each of these limitations is significant. The first means that sled test results may have limited relationship to real world performance in many types and levels of severity of crash. The second means that sled test results may not be a good measure of air bag performance in the kinds of crashes in which air bags are supposed to save lives. While we proposed to return to the up-to-48 km/h (30 mph) unbelted rigid barrier test requirement, we requested comments on possible alternative unbelted crash test requirements.

b. Comments on 1998 NPRM.

Our proposal to reinstate the up-to-48 km/h (30 mph) unbelted rigid barrier test requirement was by far the most extensively debated issue of this rulemaking. As noted earlier, commenters had sharply different views on this aspect of the NPRM. In their initial comments, motor vehicle manufacturers and their trade associations strongly opposed returning to the up-to-48 km/h (30 mph) unbelted rigid barrier test and urged that the sled test option remain in effect permanently. They argued that reinstating the up-to-48 km/h (30 mph) unbelted rigid barrier test would prevent continued use of ''depowered'' air bags and require a return to ''overly aggressive'' air bags and that the test is not representative of typical real world crashes. They argued that the sled test includes a crash pulse that is more representative of typical real world crashes.

On August 31, 1999, however, vehicle manufacturers and their trade associations presented to the agency a

[13] More specifically, the seat would be placed in the full forward position if the 5th percentile adult female dummy can be placed in the seat when it is in that position. Otherwise, the seat is moved back to the closest position to full forward that will allow the dummy to be placed in the seat.

[14] The count of 14 tests reflects four rigid barrier tests (belted 50th percentile adult male dummy, unbelted 50th percentile adult male dummy, belted 5th percentile adult female dummy, and unbelted 5th percentile adult female dummy), each of which are counted as three tests. Thus, the rigid barrier tests account for 12 of the 14 tests. The other two tests were the offset test with the driver side of the vehicle engaged with the barrier, and the offset test with the passenger side of the vehicle engaged with the barrier.

[15] We explained in the NPRM that we added the sled test to Standard No. 208 in March 1997 as a temporary option to simplify and expedite the testing and certification of redesigned air bags that inflate less aggressively. We did so because the lead time needed for the relatively straightforward redesign measures contemplated by the manufacturers for MY 1998 vehicles, including the reduction of inflator power, was significantly shorter than the lead time for the technological solutions that are the subject of this rulemaking.

consensus recommendation for an unbelted crash test. The industry recommended an unbelted rigid barrier crash test at 40 km/h (25 mph) using both 50th percentile adult male dummies and 5th percentile adult female dummies. The test would be conducted in the perpendicular mode only, i.e., there would be no unbelted oblique tests. Industry representatives argued that oblique tests are not needed to ensure wide air bags as vehicle manufacturers will provide them in light of other considerations, e.g., general safety considerations, the 48 km/h (30 mph) belted rigid barrier crash testing, and IIHS and European high speed belted offset deformable barrier testing.

In its comments on the NPRM, IIHS also opposed returning to the up-to-48 km/h (30 mph) unbelted rigid barrier test, for reasons similar to those cited by the vehicle manufacturers. However, that organization suggested that if we wish to phase out the sled test, we should consider replacing it with the 56 km/h (35 mph) European offset crash into a deformable barrier, using unbelted dummies, instead of the rigid barrier test. IIHS stated that this configuration would address not only protection in asymmetric crashes, but also some issues of intrusion that are related to restraint system performance, e.g., steering column movement. IIHS also stated that adoption of this test would be in the direction of harmonizing European and U.S. test procedures, the only difference being using unbelted versus belted dummies.

On September 14, 1999, however, IIHS advised us that it now believes that an unbelted 56 km/h (35 mph) offset deformable barrier crash test would be inappropriate. That organization is concerned that including this test in Standard No. 208 might lead to an increase in unintended high-energy air bag deployments, posing risks to out-of-position occupants, because of uncertainties in the sensing and algorithm capabilities in making proper deployment decisions. This potential problem is related to the nature of this crash test. During the initial phase of the test, i.e., during the crushing of the deformable barrier face, vehicles experience a long duration, low magnitude acceleration. The crash pulse in this phase of the test resembles that of a low speed crash. After the vehicle crushes the barrier face and reaches the underlying rigid portion, the remaining phase of the test is similar to a rigid barrier test. IIHS is concerned that because the initial phase of the test results in a crash pulse similar to that experienced in a low speed crash, air bag systems might not be able to distinguish between the offset test and a low speed crash during the time the decision whether to deploy the air bag must be made. If this were the case, an air bag system that was designed to meet an unbelted 56 km/h (35 mph) offset deformable barrier crash test by means of a high-energy air bag deployment might inappropriately provide the same kind of deployment in a low speed crash, thereby posing unnecessary risks to out-of-position occupants.

The Automotive Occupant Restraints Council (AORC), representing manufacturers of air bags and seat belts, stated that while it believes the current sled test option serves a useful purpose, a sled test cannot provide a complete assessment of the crash protection provided by a vehicle/restraint system. That organization stated it believes that to fully assess crash protection for belted and unbelted occupants, barrier crash tests of complete vehicles should be included in the test requirements of Standard No. 208. AORC noted that complete vehicle barrier tests permit the evaluation of the vehicle's structure and its contribution to occupant protection. AORC recommended that additional analysis be conducted concerning what barrier and test conditions should be included in Standard No. 208.

A number of commenters, including several public interest groups, argued that the up-to-48 km/h (30 mph) unbelted rigid barrier test is representative of a significant portion of real world crashes, and that improvements in vehicle and air bag designs will enable manufacturers to meet the test without safety tradeoffs.

As to the proposed belted tests, some vehicle manufacturers argued in their comments on the NPRM that a belted rigid barrier test using 5th percentile adult female dummies would be redundant. They argued that the combination of other tests using 5th percentile adult female dummies plus the existing rigid barrier test using belted 50th percentile adult male dummies would address the same area of safety.

Commenters' views on the proposed up-to-40 km/h (25 mph) belted offset deformable barrier test were mixed, but mostly supportive. Many commenters, including several safety advocacy groups and a number of vehicle manufacturers, supported the addition of an offset deformable barrier test.

As noted earlier, some vehicle manufacturers requested that the test be conducted only with the driver's side engaged, instead of with either side engaged as proposed in the NPRM. The Association of International Automobile Manufacturers (AIAM) stated that a test with the driver's side engaged would more likely produce worst case driver out-of-position locations and possible driver-side intrusion, and that a passenger side offset test would be redundant. Another suggestion made by some vehicle manufacturers was to conduct the test only at 40 km/h (25 mph), rather than at speeds up to 40 km/h (25 mph).

General Motors (GM) stated that it agreed with the addition of the offset deformable barrier test only if the unbelted sled test option remained in effect. GM stated that the offset deformable barrier test augments the sled test by addressing the crash sensing aspects of performance.

DaimlerChrysler argued that the addition of a 40 km/h (25 mph) belted offset deformable barrier test for the 5th percentile adult female is unnecessary in light of future ''depowered'' and/or advanced air bags. That commenter stated that injury risks to small occupants sitting near the driver air bag are adequately assessed using the proposed out-of-position, low-risk deployment tests, which it endorses.

c. SNPRM.

We believe that the comments on the proposed test requirements to improve occupant protection for different size occupants, belted and unbelted, raise two primary questions:

(1) What type and severity level of an unbelted crash test should be included in Standard No. 208?

(2) Are some of the tests proposed in the NPRM redundant, given the other proposed tests?

In the sections which follow, we will address what unbelted test requirements are needed to address the protection of unbelted teenagers and adults, and what overall set of requirements is needed to improve protection for different size occupants, belted and unbelted.

(i) Requirements for Tests With Unbelted Dummies

As we address the issue of what unbelted requirements should be included in Standard No. 208 to address the protection of unbelted teenagers and adults, we believe the ultimate question for regulators, industry and the public is how the required safety features work in the real world. We will consider that question as we separately address two issues: (1) sled testing versus crash testing, and (2) alternative unbelted crash tests (e.g., rigid barrier crash tests, offset deformable tests, etc.) at various severity levels.

Crash testing vs. sled testing. In a full-scale crash test, instrumented test dummies are placed in a production

vehicle, and the vehicle is actually crashed. Measurements from the test dummies are used to determine the forces, and injury potential, human beings would have experienced in the crash.

Many different types of crash tests can be conducted, and the various types of crash tests can be conducted at different levels of severity. Commonly conducted crash tests include: (1) rigid barrier tests, in which a vehicle is crashed head-on (perpendicular) or at an angle into a rigid barrier, (2) offset deformable barrier tests, in which a vehicle is crashed into a barrier with a deformable face, with only a portion of the front of the vehicle (e.g., 40 percent) engaging the barrier, and (3) moving deformable barrier tests, in which a moving deformable barrier designed to be representative of particular vehicles is crashed into the test vehicle. Vehicle-to-vehicle crash tests, in which one vehicle is crashed into another vehicle, are sometimes used in research or product development.

In a sled test, no crash takes place. The vehicle is essentially undamaged. The vehicle is placed on a sled-on-rails, and instrumented test dummies are placed in the vehicle. The sled is accelerated very rapidly backwards (relative to the direction that the occupants would be facing), so that the occupant compartment experiences the same motion as might be experienced in a crash. The air bags are manually deployed at a pre-selected time during the sled test. Measurements from the test dummies are used to determine the forces, and injury potential, human beings would have experienced during the test.

In the NPRM, we explained that the agency has long specified full scale vehicle crash tests using instrumented dummies, in a variety of our standards, because it is only through such tests that the protection provided by the vehicle occupant protection *system* can be fully measured.

In the NPRM, we cited several significant limitations of the current sled test, some of which are inherent to any sled test. We explained:

> Unlike a full scale vehicle crash test, a sled test does not, and cannot, measure the actual protection an occupant will receive in a crash. The current sled test measures limited performance attributes of the air bag, but cannot measure the performance provided by the vehicle structure in combination with the air bags or even the full air bag system by itself.
>
> Among other shortcomings, the sled test does not evaluate the actual timing of air bag deployment. Deployment timing is a critical component of the safety afforded by an air bag. If the air bag deploys too late, the occupant may already have struck the interior of the vehicle before deployment begins.
>
> Air bag timing is affected by parts of the air bag system which are not tested during a sled test, i.e., the crash sensors and computer crash algorithm. A barrier crash test evaluates the ability of sensors to detect a crash and the ability of an algorithm to predict, on the basis of initial sensing of the rate of increase in force levels, whether crash forces will reach levels high enough to warrant deployment. However, the sled test does not evaluate these critical factors. The ability of an algorithm to correctly, and quickly, predict serious crashes is critical. The signal for an air bag to deploy must come very early in a crash, when the crash forces are just beginning to be sensed by the air bag system. A delay in an air bag's deployment could mean that the air bag deploys too late to provide any protection. In a sled test, the air bag is artificially deployed at a predetermined time. The time of deployment in a sled test is artificial and may differ significantly from the time when the air bag would deploy during an actual crash involving the same vehicle.
>
> Second, the current generic sled pulse does not replicate the actual crash pulse of a particular vehicle model, i.e., the specific manner in which the front of the vehicle deforms during a crash, thereby absorbing energy. The actual crash pulse of a vehicle is a critical factor in occupant protection. A crash pulse affects the timing of air bag deployment and the ability of an air bag to cushion and protect an occupant. However, the current sled test does not use the crash pulse of the vehicle being tested. In many cases, the crash pulse used in the sled test is not even one approximately representative of the test vehicle. The sled test uses the crash pulse of a large passenger car for all vehicles, regardless of their type or size. This crash pulse is appropriate for large passenger cars, but not for light trucks and smaller cars since they typically have much ''stiffer'' crash pulses than that of the sled test. In the real world, deceleration of light trucks and smaller cars, and their occupants, occurs more quickly than is simulated by the sled test. Thus, the sled test results may overstate the level of occupant protection that would be provided by a vehicle and its air bag system in the real world. An air bag that can open in a timely fashion and provide adequate cushioning in a soft pulse crash may not be able to do so in a stiffer pulse crash. This is because an occupant of a crashing vehicle moves forward, relative to the vehicle, more quickly in a stiffer pulse crash than in a softer pulse crash.
>
> Third, a sled test does not measure the potential for harm from vehicle components that are pushed back into the occupant compartment during a crash. Examples of components that may intrude into the occupant compartment include the steering wheel, an A-pillar and the toe-board. Since a sled test does not involve any kind of crash or deformation of the vehicle, it implicitly assumes that such intrusion does not occur in crashes. Thus, the sled test may indicate that a vehicle provides good protection when, as a result of steering wheel or other intrusion, the vehicle will actually provide poor protection in a real world crash.
>
> Fourth, the sled test does not measure how a vehicle performs in angled crashes. It only tests vehicles in a perpendicular crash. In the real world, frontal crashes occur at varying angles, resulting in occupants moving toward the steering wheel and instrument panel in a variety of trajectories. The specification of angled tests in conjunction with the barrier test requirement ensures that a vehicle is tested under these real world conditions. 63 FR 49971.

Commenters supporting retention of the sled test did not dispute the inherent limitations of sled tests as compared to crash tests.

AAMA argued that the single best argument for retaining the existing sled test is that ''it's working;'' AAMA contended that ''depowered'' air bags in vehicles certified according to the sled test are saving the lives of occupants of all sizes, while reducing the harm to children and other out-of-position occupants.

It is not clear, however, that the sled test is responsible for any of the benefits of redesigned air bags other than to the extent it made it easier for vehicle manufacturers to redesign and certify their existing air bags more quickly.

As noted earlier, limited available data appear to indicate that redesigned air bags have reduced the risks from air bags for the at-risk populations. However, it is not possible at this time to draw statistically significant conclusions about this. There is a greater amount of data on the overall benefits of air bags. These data indicate that there is essentially the same or slightly better protection provided by the redesigned air bags compared to earlier air bags.

Regardless of how well vehicles with redesigned air bags are currently performing, however, the sled test itself cannot guarantee that future air bags would perform nearly so well. These vehicles and their air bags were initially designed to the unbelted barrier test, and their current air bags represent quick, partial redesigns of those air bags. Thus, their performance is still highly reflective of the unbelted test.

While the sled test has made it easier for manufacturers to redesign and certify their vehicles more quickly, manufacturers could and did depower air bags under Standard No. 208's unbelted barrier test. As discussed below, available data suggest that most vehicles, while certified to the sled test, continue to meet the unbelted barrier test requirements (including the new neck injury criteria) with the 50th percentile adult male dummies.

Our goal in this rulemaking is to determine what requirements to protect

unbelted and other occupants should apply to vehicles in the future. AAMA's argument that the sled test is working does not take into account all of the kinds of less protective vehicles and air bags that would be permitted by the sled test, given its mildness, and which might be produced if the sled test were allowed to remain in effect on a long-term basis.

The sled test is unable to offer any assurance that current vehicles and air bags are representative of what manufacturers would offer in the long run if the sled test were available as a permanent option. Nothing in the standard would inhibit manufacturers from making their air bags significantly smaller in both depth and width, and thus less protective in high speed crashes. In particular, narrower air bags could provide less protection in crashes involving oblique angles. The sled test also might permit ''face bags'' which do not provide chest protection or restraint for portions of the lower torso. In addition, the absence of an unbelted full-vehicle test at an appropriate severity level would permit vehicles to be designed with stiffer, less energy-absorbing front ends, e.g., to provide more interior passenger or cargo-carrying space at the expense of frontal ''crush'' space.

Moreover, unless balanced by an effective unbelted crash test requirement, the proposed new requirements to minimize air bag risks to out-of-position occupants have the potential to create an incentive for manufacturers to make their current air bags smaller and less protective. An inexpensive and relatively easy way to reduce risks from the air bag to out-of-position occupants is to further depower air bags and make them smaller. However, if air bags are depowered too much or made too small, they will not provide meaningful protection in high speed crashes.

Our basic obligation is to issue Federal motor vehicle safety standards that establish a minimum level of performance that protects the public against unreasonable risk of crashes occurring because of the design, construction, or performance of a motor vehicle, and against unreasonable risk of death or injury in a crash. In this particular rulemaking, we are facing an array of safety problems, and TEA 21 as well as our pre-existing statutory authority, require that we address each of them.

The most reliable way to determine how vehicles will perform in real world crashes is to crash them. That is why we believe that a crash test is needed. Sled tests are useful research tools, but they do not provide as full or accurate a measure of the occupant protection that a vehicle will provide in the real world.

Given the importance of unbelted protection, we believe it is necessary to provide the public with assurance that the minimum level of performance for each vehicle will be required to be meaningful, based on careful scientific and engineering analysis. While we have carefully considered all of the comments concerning the sled test, we continue to believe that sled testing is an inadequate long-term means for ensuring that current levels of unbelted occupant protection are improved. This is based on the above-noted inherent limitations of sled tests, as compared to crash tests, in evaluating occupant protection. Whether one looks at IIHS with its offset crash test program, Europe with its offset NCAP program, or our experience with our NCAP, Standard No. 208 and Standard No. 214, it is widely acknowledged that crash tests, set at appropriate severity levels, provide the best means of evaluating the protection that occupants will receive in real world crashes.

For this SNPRM, we urge commenters to focus on what specific unbelted complete vehicle crash tests are the most appropriate.

Alternative unbelted crash tests. As we noted above, many different types of crash tests can be conducted, and the various types of crash tests can be conducted at different levels of severity and orientation. Commonly conducted crash tests include: (1) fixed rigid barrier tests, (2) fixed offset deformable barrier tests and (3) moving deformable barrier tests.

If government or anyone else wants to determine whether a vehicle provides an appropriate degree of occupant protection in a potentially fatal or serious injury producing crash, the crash test must have the severity representative of those crashes. The fact that a test might indicate that an occupant would not be injured or killed in a relatively mild crash says nothing about whether the occupant would likely be killed in a more serious crash. That is why it is important to distinguish between the universe of all typical real world crashes and those typical real world crashes serious enough to pose a significant risk of serious or fatal injury. While one could argue that the most ''typical'' crash is probably a fender bender resulting in little or no personal injury, basing Standard No. 208 on such a test would not result in any savings in lives or reductions in serious injuries. Of course, there are many issues to consider in selecting a specific crash test, but we must focus on seeking to represent the kind of typical crashes that are potentially fatal, rather than typical crashes as a whole.

When we issued the NPRM, we released a paper titled ''Review of Potential Test Procedures for FMVSS No. 208.'' The paper provided a detailed technical analysis of the various alternative crash tests. To accompany this SNPRM, we are releasing an updated version of that paper, which has been revised in light of comments and other new information. The paper shows that, among the currently available alternative crash tests, the rigid barrier test (perpendicular and up to ±30 degrees oblique to perpendicular) represents the greatest number of real world crashes involving serious to fatal injuries. The only alternative crash test that would represent a greater number of such crashes would be one involving a moving deformable barrier, which is still undergoing research.

In the NPRM, we noted that while the perpendicular rigid barrier test results in crash pulses of short duration, e.g., the kind of pulse that a vehicle experiences when it fully engages another similar-sized or larger vehicle directly head-on or strikes a bridge abutment, the oblique rigid barrier tests result in crash pulses of longer duration, i.e., a ''softer'' crash pulse, which may occur when vehicles strike each other at various angles.

We also noted that vehicles and air bags designed to comply with the unbelted rigid barrier test have been effective in saving lives. At the time of the NPRM, we estimated that air bags had saved the lives of about 3,148 drivers and passengers. Of these, 2,267 were unbelted. The rest, 881, were belted. If these levels of effectiveness are maintained (i.e., 21 percent in frontal crashes for restrained occupants and 34 percent in frontal crashes for unrestrained occupants), air bags will save more than 3,000 lives each year in passenger cars and light trucks when all light vehicles on the road are equipped with dual air bags.

Commenters opposing the 48 km/h (30 mph) unbelted barrier test raised two primary issues. First, they argued that the test is not representative of typical crashes. Second, they argued that returning to this test would prevent continued use of ''depowered'' air bags and would require a return to ''overly aggressive'' air bags.

We note that, in arguing that the 48 km/h (30 mph) unbelted barrier test is not representative of typical crashes, the commenters did not define what they meant by ''typical crashes.'' Given that

the purpose of Standard No. 208 is primarily to reduce serious-to-fatal injuries, we believe that question is whether that test is representative of the crashes that produce those injuries. More than 18,000 drivers and right front passengers are killed each year in frontal impacts, and more than 290,000 drivers and right front passengers experience moderate to critical non-fatal injuries. These numbers would be significantly higher without effective air bags.

In order to promulgate safety standards that protect the public against unreasonable risk of death or injury in a crash, and to fulfill our specific duty under TEA 21 to improve occupant protection for occupants of different sizes, belted and unbelted, it is necessary for Standard No. 208 to address these crashes. In addition, by requiring vehicles to provide protection over a range of crash severities, e.g., in tests at speeds ''up to'' a given velocity, we also address protection for lower severity crashes. The upper level severity must, however, be sufficient to ensure that manufacturers provide life-saving occupant protection in higher speed crashes.

The following figures, derived from National Automotive Sampling System (NASS) data for years 1993–1997, show the cumulative distribution of injuries and fatalities in frontal crashes by delta V,[16] for all occupants, belted occupants, and unbelted occupants:

BILLING CODE 4910–59–P

[16] As used here, ''delta V'' refers to the crash-induced change in velocity of a vehicle in a crash. When looking at the severity of a crash and its influence on air bag design, delta V is not the only important factor. Another important factor is the time to reach that delta V. The time is important because it affects the speed at which the occupant strikes the interior of the vehicle, i.e., for a given delta V crash, the shorter the time duration, the higher the occupant impact speed.

Figure 3: Cumulative Distribution of Injuries: All Occupants by Delta V & Injury Severity (Frontals) – CDS 93-97

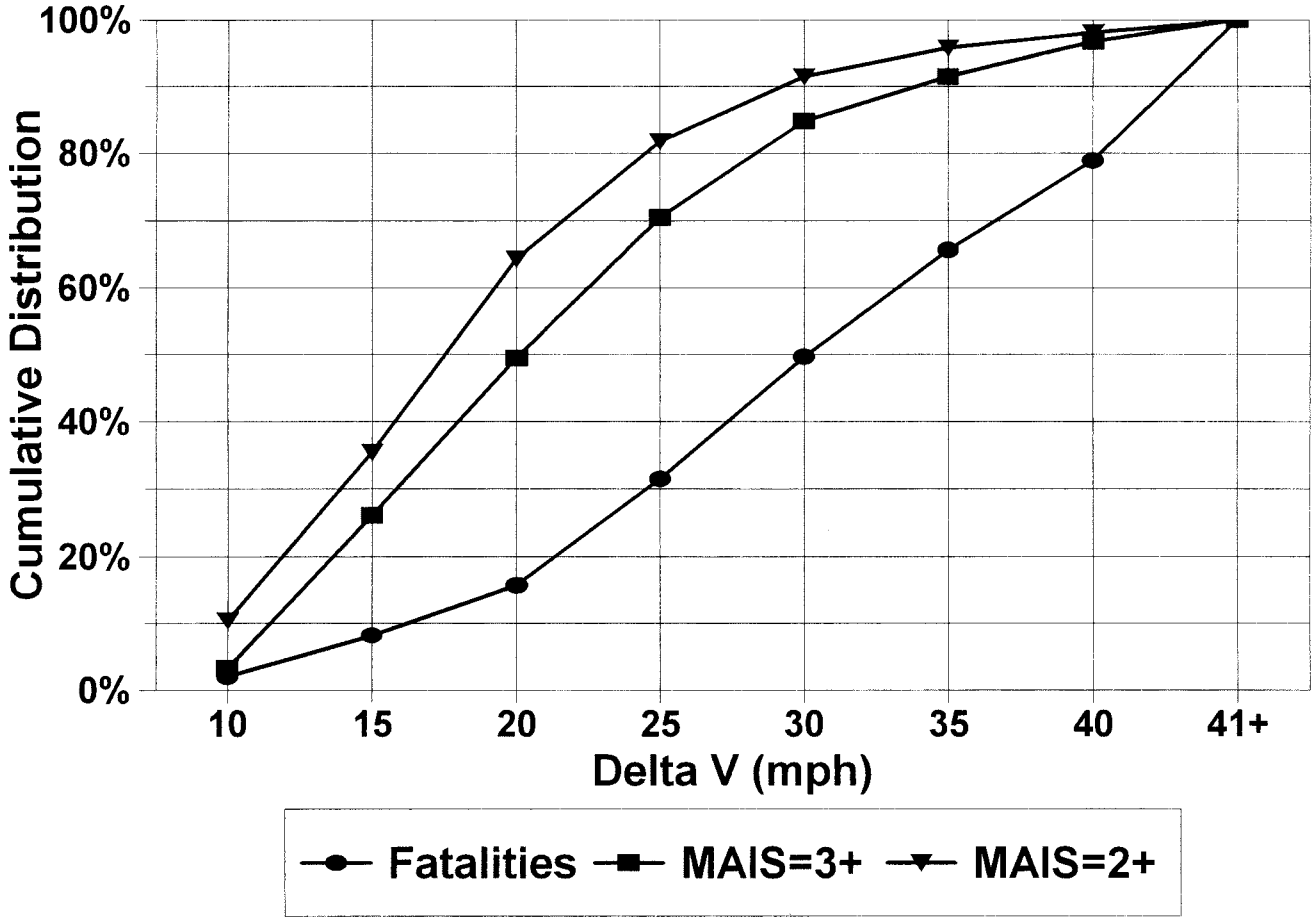

Figure 4: Cumulative Distribution of Injuries: Belted Occupants by Delta V & Injury Severity (Frontals) – CDS 93-97

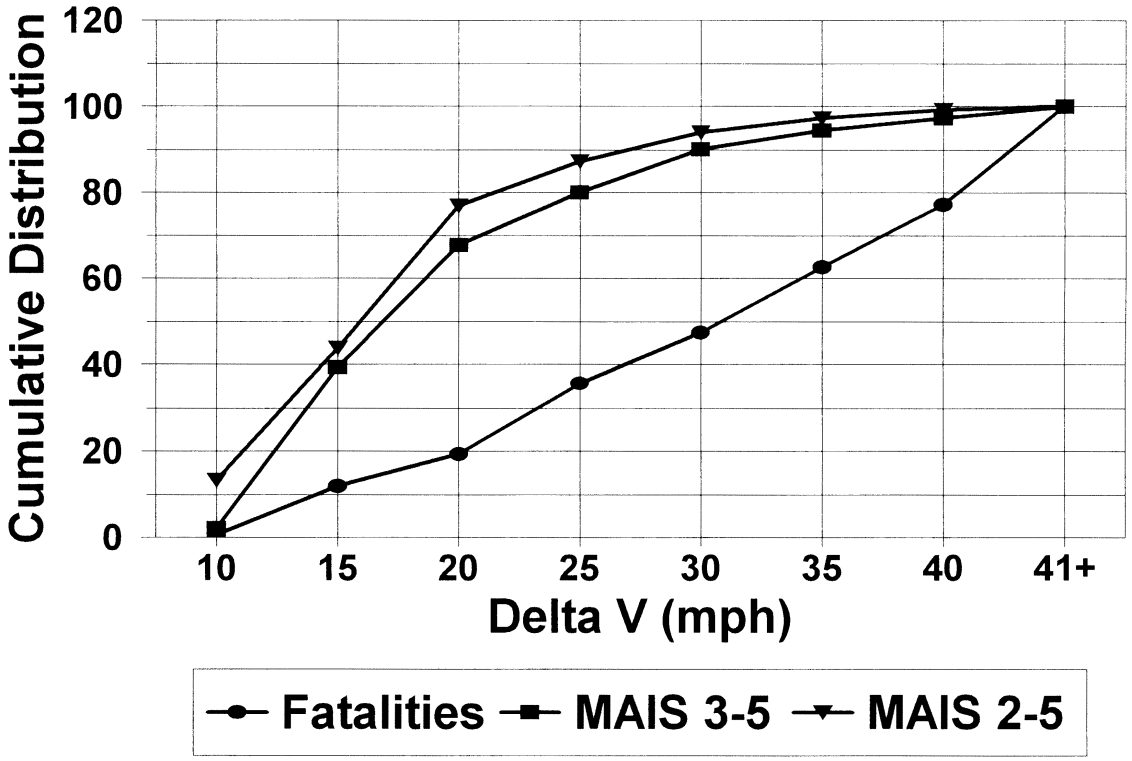

Figure 5: Cumulative Distribution of Injuries: Unbelted Occupants by Delta V & Injury Severity (Frontals) – CDS 93-97

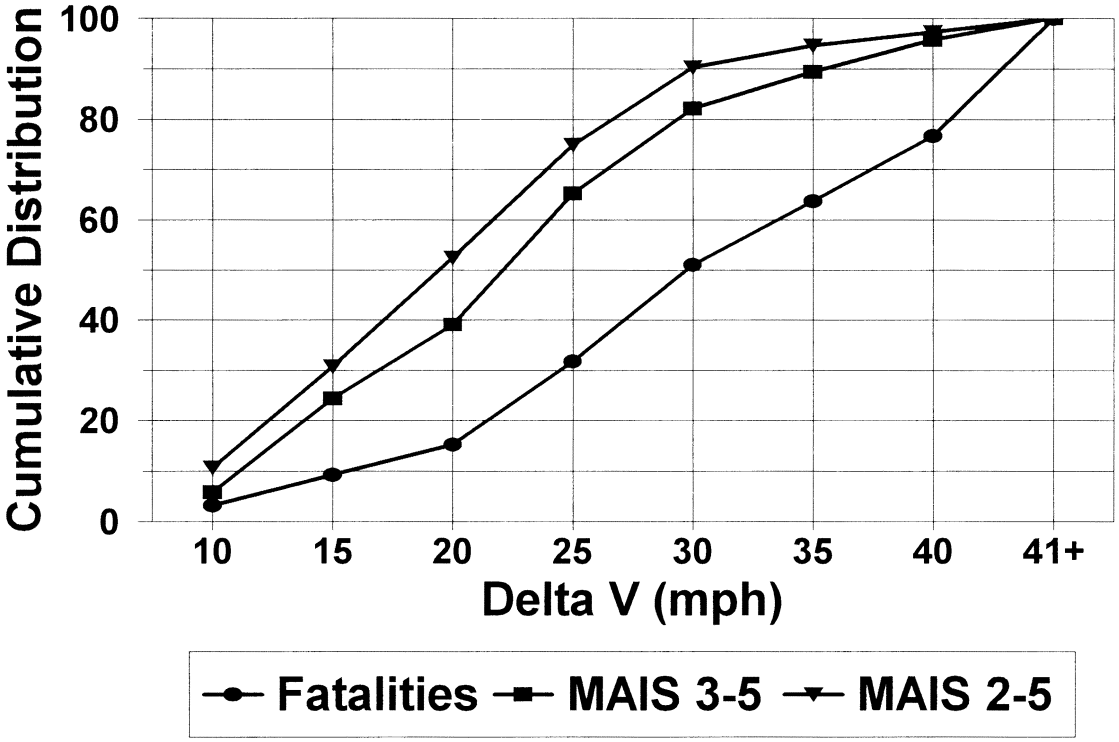

BILLING CODE 4910–59–C

The figures show the cumulative distribution of injuries by delta V for fatalities, for MAIS 3+ injuries, and for MAIS 2+ injuries. MAIS 3+ injuries are those which are classified as serious or greater injury, while MAIS 2+ are those which are classified as moderate or greater.[17]

We can see several things by examining the figures. About 50 percent of fatalities in frontal crashes occur at delta V's below 48 km/h (30 mph), and about 50 percent occur at delta V's above 48 km/h (30 mph). Looking separately at unbelted and belted occupants, 51 percent of the fatalities involving unbelted occupants and 47 percent of the fatalities involving belted occupants occur in frontal crashes at delta V's below 48 km/h (30 mph). We note that the delta V in NASS represents the speed at which the vehicle would strike a rigid barrier to duplicate the amount of energy absorbed in the crash. Thus, about half of fatalities in frontal crashes occur in crashes that are more severe than a 48 km/h (30 mph) rigid barrier crash, and half of all frontal crash fatalities occur in crashes that are less severe than a 48 km/h (30 mph) rigid barrier crash. Given that Standard No. 208's unbelted crash test requirements are intended to save lives, we disagree that 48 km/h (30 mph) rigid barrier crashes are unrepresentative of the kinds of crashes in which we are seeking to ensure protection.

As to the argument that returning to the unbelted 48 km/h (30 mph) rigid barrier test would prevent continued use of ''depowered'' air bags and require use of ''overly aggressive'' air bags, the agency will have to consider the information available to it in making a final decision.[18]

In the NPRM, we noted that, based on very limited data, it appeared that many, perhaps most, vehicles with redesigned air bags continue to meet the historical 48 km/h (30 mph) rigid barrier requirements of Standard No. 208 (using 50th percentile adult male dummies and applying the current injury criteria performance limits) by fairly wide margins. At that time, we had tested five vehicles with redesigned driver air bags in unbelted 48 km/h (30 mph) rigid

[17] The AIS or Abbreviated Injury Scale, first developed by the Association for the Advancement of Automotive Medicine in 1971, is a consensus-derived, anatomically based system that ranks individual injuries by body region on a scale of 1 to 6 as follows: 1=minor, 2=moderate, 3=serious, 4=severe, 5=critical, and 6=maximum/currently untreatable. The AIS is intended as a measure of the severity of the injury itself and not as a measure of impairments or disabilities that may result from the injury. It does not assess the combined effects of multiple injuries to a patient. The AIS was revised and updated several times, with the most recent revision in 1990. MAIS represents the maximum injury severity (expressed in terms of AIS) of any injury received by a person, regardless of the nature or location of the injury.

[18] It is difficult to respond to the industry argument that the 48 km/h (30 mph) barrier test would prevent continued use of ''depowered'' air bags because ''depowered'' is an amorphous, relative concept, not an absolute one. The term simply means ''less power than before.'' Saying that an air bag is depowered is not a statement that the air bag has more or less than some specific pressure rise rate or overall peak pressure of the air bag inflator. Thus, there is no way of examining or testing an air bag to determine whether it is ''depowered.''

Further, not all pre-depowered air bags had the same level of power. Indeed, there was a wide variation in the level of power of pre-depowered air bags. Likewise, there is variation in the level of power of depowered air bags. In addition, Parents for Safer Air Bags (Parents) noted that many of today's vehicles incorporate a whole array of air bag design improvements, making it difficult to attribute the apparent decrease in air bag fatalities and injuries to any particular feature or combination of features.

Accordingly, in this document, we generally use the term ''redesigned'' in referring to air bags that have been changed in various ways since MY 1997, including, in many cases, a reduction in the pressure rise rate and/or overall peak pressure of the air bag inflator. These air bags have not been depowered as much as the sled test permits. Further, most of the redesigned air bags tested by the agency meet the unbelted 48 km/h (30 mph) barrier test.

barrier tests, and all passed Standard No. 208's previous injury criteria by significant margins. We had tested six vehicles with redesigned passenger air bags in unbelted 48 km/h (30 mph) rigid barrier tests, and all but one passed the standard's injury criteria performance limits by significant margins.

Some vehicle manufacturers objected to our analysis in this area. They argued that, given the variability associated with testing different vehicles of the same design, the fact that a particular vehicle had passed a single test would not necessarily allow them to certify that model vehicle as complying with Standard No. 208 because there would not be a sufficient margin of compliance to ensure that all vehicles of that model would pass the test. Some manufacturers indicated that they need a 20 percent margin of compliance in order to so certify. Vehicle manufacturers also stated that they need to ensure that all variations and configurations of a model would pass the test and that, in some cases, we tested a configuration which would result in lower injury criteria readings than other variations and configurations.

We continue to believe that a key way of assessing the validity of the argument that a return to the 48 km/h (30 mph) barrier test would—at least in the absence of additional technological improvements—prevent continued use of redesigned air bags is to test vehicles with those air bags in 48 km/h (30 mph) barrier tests and see how they perform. Therefore, since issuing our NPRM, we have conducted more barrier tests of vehicles with redesigned air bags.

We have now tested a total of 13 MY 1998–99 vehicles with redesigned air bags in a perpendicular rigid barrier crash test at 48 km/h (30 mph) with unbelted 50th percentile adult male driver and passenger dummies. The vehicles represented a wide range of vehicle types and sizes. In particular, the 13 vehicles included one sub-compact car, one compact car, four mid-size cars (representing high sales volume vehicles), one full-size car, two mid-size sport utility vehicles, one full-size sport utility vehicle, one pickup truck, one minivan, and one full-size van.[19]

For the driver position, 12 of the 13 vehicles passed all the relevant injury criteria performance limits we are proposing in this SNPRM. In the one vehicle with a failure, the MY 1999 Acura RL, the driver dummy exceeded the femur load criteria. For the passenger position, 12 of the 13 vehicles also passed all of the relevant injury criteria performance limits. The MY 1998 Dodge Neon slightly exceeded the 60 g chest acceleration limit (with a value of 61.4 g). The other proposed injury criteria performance limits, (i.e., for HIC, chest deflection, and Nij) were easily met in all the tests; for most there was a greater than 20 percent margin of compliance for both the driver and passenger.

Thus, the tested vehicles with redesigned air bags, ranging widely in vehicle type and size, appear to continue to meet Standard No. 208's 48 km/h (30 mph) unbelted rigid barrier test requirements for 50th percentile adult male dummies, many of them by wide margins.

As to any vehicles that do not meet that test, at this point we simply note that TEA 21 affords lead time before all vehicles must meet whatever tests are incorporated in the final rule to be issued in this rulemaking.

As to the issue of margin of compliance, we agree that manufacturers need to ensure that all of their vehicles meet a test requirement established by a Federal safety standard. However, we do not agree that this means a 20 percent margin of compliance is necessary. The chest g value is the injury criterion that is most likely to be the limiting factor in certifying to the 48 km/h (30 mph) unbelted rigid barrier test requirements for the 50th percentile adult male dummy. Examination of compliance and certification data for pre-redesigned air bags shows that manufacturers often certified vehicles to the requirement with much less than a 20 percent margin of compliance. In fact, margins of compliance for our 48 km/h (30 mph) tests of vehicles with redesigned air bags were not that different from those with pre-redesigned air bags.

We are not suggesting that every current production vehicle would comply with the unbelted 48 km/h (30 mph) rigid barrier test. Instead, we are pointing out that a wide ranging sample of vehicle types and sizes meet the 48 km/h (30 mph) rigid barrier test, for 50th percentile adult male dummies, with redesigned air bags.

However, the ultimate issue of this rulemaking is not whether some MY 1998–99 vehicles with redesigned, single-inflation level air bags currently would not meet the 48 km/h (30 mph) unbelted barrier test requirement. As noted above, many of the air bags in current vehicles were not comprehensively redesigned, but are merely older designs of air bags with less power. TEA 21 mandates the issuance of a final rule based on means that include advanced air bag technologies. We believe the selection of future compliance tests under TEA 21 must be made in the context of those technologies, and not in the context of today's less sophisticated one-size-fits-all air bag designs. Today's air bag systems are not advanced air bags and thus do not respond to factors such as crash severity, occupant weight and occupant location. By contrast, the incorporation of advanced technologies would make air bag systems responsive to those factors. If a manufacturer decided to use a somewhat more powerful air bag to meet a 48 km/h (30 mph) unbelted rigid barrier test, or to provide protection in more severe crashes, the manufacturer could use advanced air bag technologies to provide less powerful levels of inflation in lower severity crashes, for smaller occupants, for belted occupants, and for occupants sitting with the seat in the full-forward position. Manufacturers could also reduce aggressivity of air bags by various means such as optimizing fold patterns, different cover designs, lighter fabrics, etc. Advanced technologies would also enable the manufacturer to suppress air bag deployment in appropriate circumstances, such as when children are present.

As we assess the type and severity level of an unbelted crash test should be included in Standard No. 208, we recognize that we must bear in mind that the issue of the suitability of a unbelted 48 km/h (30 mph) rigid barrier test cannot be determined solely based on whether manufacturers can meet that test with redesigned air bags using 50th percentile male dummies. In the NPRM, we proposed not only to return to that test requirement, but also to require vehicles to be certified to several new crash test requirements and new injury criteria performance limits, including tests using 5th percentile adult female dummies in the full forward seat track position, and to requirements to minimize air bag risks. Vehicle manufacturers commented that some of the design options that are available in redesigning their air bags involve potential trade-offs in meeting the different proposed requirements. For example, the optimum size air bag for meeting test requirements for 50th percentile adult dummies may make it more difficult to meet requirements for 5th percentile adult female dummies,

[19] The specific vehicles and their classes included a Saturn (sub-compact car), a Neon (compact car), an Intrepid, Camry, Taurus, and Accord (mid-size cars), an Acura RL (full-size car), an Explorer and Cherokee (mid-size SUV's), an Expedition (large SUV), a Tacoma (pickup truck), a Voyager (minivan), and an Econoline (full-size van).

and vice versa. This issue, and the agency's testing of current vehicles to a variety of the proposed test requirements, are discussed later in this notice.

Proposed alternative unbelted crash tests. In the NPRM, we indicated that while we believe the 48 km/h (30 mph) unbelted rigid barrier test is a good approach, we were also willing to consider alternative unbelted crash tests. The only alternative unbelted crash test advocated by a commenter that could realistically be implemented within the time frame of this rulemaking is the unbelted 56 km/h (35 mph) offset deformable barrier test suggested by IIHS. As noted earlier, IIHS stated that this configuration would address not only protection in asymmetric crashes but also some issues of intrusion that are related to restraint system performance, e.g., steering column movement.

Given the continued debate over what requirements should apply to ensure protection to unbelted occupants, we want to be sure that we have considered and received the benefit of public comments on the various alternative approaches that are available at this time. One approach, of course, is the one we proposed in the NPRM, the unbelted rigid barrier test. We note that some have suggested that, instead of conducting this test at speeds up to 48 km/h (30 mph), we reduce the maximum speed. Ford, for example, suggested in 1995 that we adopt an upper speed of 40 km/h (25 mph). It coupled this suggestion with the further suggestion that the speed of the belted test be increased to 56 km/h (35 mph).[20] In its recent consensus statement, the Alliance has suggested a single speed test (perpendicular impact only) of 40 km/h (25 mph).

A second possible approach is an unbelted fixed offset deformable barrier test, along the lines suggested by IIHS in its comment on the September 1998 NPRM. While, as discussed above, that organization has recently identified some concerns about that test, we believe an unbelted offset deformable barrier test represents a sufficiently interesting alternative approach to warrant seeking public comment. As to the concern that IIHS recently identified about air bag systems possibly having difficulty distinguishing between the offset test and a low speed crash during the time the decision whether to deploy the air bag must be made, we note that it may be possible to address this potential problem by using advanced sensing systems. That is one of the issues for which we would like to receive public comments. By requesting public comments, we will obtain additional data and views to better enable us to make a thorough evaluation of the merits of including such a test in Standard No. 208.

For this SNPRM, we are proposing and seeking comments on two alternative unbelted tests. The first alternative is the unbelted rigid barrier test (perpendicular and up to ±30 degrees oblique to perpendicular with 50th percentile adult male dummies, but perpendicular only in tests with 5th percentile adult female dummies) with a maximum speed to be established within the range of 40 to 48 km/h (25 to 30 mph). As part of this alternative, we are considering the possibility of coupling a lower speed for the unbelted barrier test with a higher speed for the belted barrier test. The second alternative is an unbelted offset deformable barrier test with a maximum speed to be established within the range of 48 to 56 km/h (30 to 35 mph). A vehicle would have to meet the requirements both in tests with the driver side of the vehicle engaged with the barrier and in tests with the passenger side engaged.

We note that, in considering a range of upper severity levels, the upper severity level could be adjusted by either changing the test speed or applying different injury criteria limits at higher speeds. For example, in our rulemaking to facilitate quick redesign of air bags, in lieu of the sled test, we identified the possibility of maintaining the 48 km/h (30 mph) unbelted rigid barrier test, but relaxing the limit on chest g's. We also note the possibility of specifying relaxed injury criteria performance limits or lower maximum test speeds that would apply during the TEA 21 phase-in period and more stringent ones that would apply thereafter.

For all of the unbelted crash tests proposed in this document, protection would be required in crashes ranging from a specified minimum speed to a specified highest speed, rather than at all speeds ''up to'' that specified highest speed.

Under the unbelted rigid barrier test alternative, the agency would not test at a speed of less than 29 km/h (18 mph), and under the unbelted offset deformable barrier test alternative, the agency would not test at a speed of less than 35 km/h (22 mph). (We are proposing a higher minimum test speed for the latter alternative because, for a given speed, it is a less severe test.) This is a departure from the proposal in the NPRM and from prior agency practice. One reason for this change is that we want to be sure that the standard does not push deployment thresholds downward, i.e., cause air bags to be deployed at lower speeds than are appropriate for maximum occupant protection. Commenters indicated that, in order to meet neck injury criteria, air bag deployments might be required at very low speeds, even in crashes with a delta-V lower than 10 mph, particularly with the 5th percentile adult female dummy in the full forward position. While the issue of the most appropriate threshold for air bag deployment is complex, we believe there is a consensus that ''no fire'' thresholds should not be any lower than they are at present. Moreover, neck injuries are not a significant problem in lower speed crashes.

The proposed high speed unbelted offset deformable barrier test would involve the same crash configuration as we proposed in the NPRM for the up-to-40 km/h (25 mph) belted offset deformable barrier test. Vehicles would have to meet the requirements in tests with both the vehicle and the passenger side of the vehicle engaged. The test would, of course, be conducted at higher speeds, and unbelted 50th percentile adult male dummies and 5th percentile adult female dummies would be used.

[20] The agency examined Ford's recommendation in a status report titled ''On the Issue of Testing Air-Bag Equipped Vehicles with and without Belt Restraints at Different Speeds,'' November 2, 1995. Originally docketed in the docket (No. 74–14; Notice 97–001) for a request for comments published by the agency November 9, 1995 (60 FR 56554); more recently docketed in NHTSA–96–1772–002. In the 1995 request for comments, the agency said:

While NHTSA anticipates that these smart bag systems will substantially minimize adverse side effects of air bags in the not too distant future, this still leaves the question of what can be done in addition to public education for the near future. Manufacturers may be able to make adjustments to existing air bag systems. Further, NHTSA may be able to make temporary adjustments to its regulations if it is shown to be necessary to enable manufacturers to minimize any adverse side effects during this period.

For example, Ford has requested that NHTSA amend its crash testing procedures in Standard No. 208. The standard currently requires test dummies to be protected in a 30 mile per hour (mph) crash both when wearing safety belts and when not wearing the belts (i.e., protected by the air bag alone). Ford asked that the test speed for the unbelted dummies be lowered to 25 mph, while the test speed for the belted dummies be raised to 35 mph. According to Ford, this change would allow manufacturers to better ''tune'' the interaction between the air bag and the safety belt so as to optimize the protection afforded to occupants who use their belts. Ford stated that the current testing procedure forces manufacturers to base occupant protection designs solely on the air bag, rather than the interaction between the air bag and the belt. Ford believes that such a change can reduce air bag-induced injuries.

The offset deformable barrier test is used in several ways in different parts of the world. The test has been adopted as a requirement in Europe at a speed of 56 km/h (35 mph), using belted 50th percentile adult male dummies, pursuant to EU Directive 96/79 EC. The test is also conducted in Europe at a higher speed, 64 km/h (40 mph), as part of the European New Car Assessment Program. The Australian New Car Assessment Program conducts the same test at the same speed. IIHS also conducts this test at the same speed, using belted 50th percentile adult male dummies to evaluate the crashworthiness of vehicles. Transport Canada is developing a test procedure using belted 5th percentile adult female dummies at impact speeds up to 40 km/h (25 mph) to evaluate air bag sensor performance and air bag aggressivity.

While a great deal has been written on the subject of unbelted rigid barrier tests over the years, the high speed *unbelted* offset deformable barrier test is relatively new. We note that we have been conducting research for several years with the intention of proposing to add a high speed *belted* frontal offset test to Standard No. 208. For information about this research program, see our Report to Congress, Status Report on Establishing a Federal Motor Vehicle Safety Standard for Frontal Offset Crash Testing, April 1997. This report is available on our web site at *http://www.nhtsa.dot.gov/cars/rules/CrashWorthy/offrt.html.*

In our Report to Congress, and in the NPRM (63 FR 49958, at 49960), we stated that we were considering adding the European high speed belted frontal offset test to Standard No. 208 as a supplement to the existing tests. We stated in the Report that the Standard No. 208 rigid barrier test is most effective in preventing head and chest injuries and fatalities, but noted that it does not address lower limb and neck injuries.

We stated further in the Report that while the frontal rigid barrier test of Standard No. 208 does not produce the vehicle intrusion observed in many real world crashes, it does depict those impacts which produce the highest risk of serious to fatal injuries resulting from frontal crashes. We stated that the European frontal test procedure does not address the highest risk of serious to fatal injuries occurring in frontal crashes and that, from our viewpoint, the European test conditions were not acceptable as an alternative to Standard No. 208. We stated, however, that adoption of the European test could yield benefits in terms of a reduction in lower limb injuries.

While our analysis of the European test was made in the context of a belted condition, it nonetheless raises the issue of whether the test is adequately representative of potentially fatal crashes. To address this issue, we have sought to compare the 56 km/h (35 mph) offset deformable barrier crash test recommended by IIHS to a 48 km/h (30 mph) rigid barrier test.

Among other things, we have conducted 56 km/h (35 mph) offset deformable barrier crash tests on MY 1999 Dodge Intrepid and Toyota Tacoma vehicles. Comparing the crash pulses for these tests with the pulses of 40 and 48 km/h (25 and 30 mph) rigid barrier tests that we also conducted using these vehicles, we can make several observations. For each vehicle, there is a long duration, low magnitude acceleration during the initial phase of the test that is associated with the crushing of the deformable barrier face. After the crushing of the barrier face, the remaining segment of the crash pulse is similar to that for the 40 and 48 km/h (25 and 30 mph) rigid barrier tests, and this portion of the acceleration profile generally would fall in between the pulses for those two rigid barrier tests if adjusted with a time shift.

A close look at these pulses suggests that, from the perspective of delta-V, the deformable barrier test is approximately equal in severity to a 45 km/h (28 mph) rigid barrier test. This is consistent with a rule of thumb within the research community that the offset test's barrier equivalent velocity is approximately 20 percent less than the impact speed.

This observation is also supported by findings from our Advanced Frontal Research Program. We provided a number of vehicles tested in both collinear and oblique offset tests to NASS investigators for analysis. The investigators estimated delta Vs that were substantially lower than the impact speeds.[21] Also, IIHS conducted a similar study and observed similar results,[22] *i.e.,* the range of delta Vs were 15 to 28 percent lower than the impact speeds.

It is important to note that although we estimate 45 km/h (28 mph) as the rigid barrier equivalent speed for the 56 km/h (35 mph) offset deformable barrier test, this does not mean that air bags designed to meet the 56 km/h (35 mph) offset deformable barrier test would provide a level of protection equivalent to that provided by air bags designed to meet a 45 km/h (28 mph) barrier-like crashes.

When looking at the severity of a crash and its influence on air bag design, delta V is not the only important factor. Another important factor is the time to reach that delta V. The time is important because it affects the speed at which the occupant strikes the interior of the vehicle, *i.e.,* for a given delta V crash, the shorter the time duration, the higher the occupant impact speed.

As discussed in the test procedures paper, the offset crash test has a long duration deceleration pulse. As a result, occupants in a vehicle involved in such a crash would impact the interior components at lower speeds than occupants who were in a vehicle involved in barrier-like crashes. Because of this aspect of offset crashes, the test procedures paper separates the crash events in NASS and estimates a substantially lower target population for the offset test than for the rigid barrier test.

The high speed unbelted rigid barrier test and the high speed unbelted offset deformable barrier test are significantly different, and each has potential advantages as compared to the other.

Among the considerations that are relevant to the high speed unbelted rigid barrier test are the following—

- It involves a stiffer crash, thereby promoting the design of soft frontal structure and deeper air bags that provide more protection against AIS ≥ 3, life-threatening, head/chest injuries in higher speed crashes.
- It promotes the design of wider air bags which provide head and chest protection in the angular component of the test.
- It is a well known test condition. It has been part of Standard No. 208 since 1984.
- It may result in more repeatable test results than an offset test would provide. Since the offset test involves striking a soft structure, there may be a chance of air bag sensor timing variability. Variations in air bag sensor timing can lead to variations in occupant kinematics. The rigid barrier test, on the other hand, results in relatively consistent air bag deployment timings.
- The full frontal rigid barrier test represents a vehicle striking a like vehicle.

Among the considerations that are relevant to the high speed unbelted

[21] Stucki, Sheldon L. and Fessahaie, Osvaldo, ''Comparison of Measured Velocity Change in Frontal Crash Tests to NASS Computed Velocity Change,'' SAE Paper No. 980649, 1991 SAE International Congress and Exposition, Detroit, March 1998.

[22] O'Neill, Brian, Preuss, Charles A., and Nolan, James M., Insurance Institute for Highway Safety, ''Relationships Between Computed Delta V and Impact Speeds for Offset Crashes'', Paper No. 96–S9–O–11, Proceedings of Fifteenth International Technical Conference on the Enhanced Safety of Vehicles, Melbourne, Australia, May 1996.

offset deformable barrier test are the following:

- It provides a more challenging test of the vehicle crash sensors. In order to provide optimal protection to the occupant in a crash, the crash sensors need to make a determination of when to fire the air bag as early as possible. However, the challenge in an offset deformable barrier crash test arises from the fact that the engagement of the offset deformable barrier results in a soft crash pulse which needs to be detected by the sensor for the algorithm to make the decision to deploy, and a harder crash pulse later in the event.
- It provides a more challenging test of the vehicle structure. The offset deformable barrier test engages only 40% of the front structure of the vehicle. Therefore, the crush is concentrated on one side and produces more intrusion into the occupant compartment. The full frontal rigid barrier test engages the entire front of the vehicle in a distributed loading pattern.
- It has greater potential for benefits related to injury from intrusion.
- The deformable barrier is known and used in other test configurations. The European offset crash test requirement and the IIHS crashworthiness evaluations are two examples.
- The deformable barrier can be bottomed out by sports utility vehicles and full size pick-up trucks due to their increased mass and stiffness of the structures involved. To the extent that the deformable barrier is bottomed out, it becomes more like an offset rigid barrier test, thereby potentially providing a more severe crash test for larger, heavier vehicles.
- The offset deformable barrier test is not representative of a vehicle-to-vehicle crash. It is perhaps most easily understood by comparing it to a full frontal rigid barrier test and an offset rigid barrier test. An offset rigid barrier test simulates a crash where the entire crash energy is absorbed by the structural members of the struck side. In an offset deformable barrier test, this energy is shared by the barrier and the vehicle structures. Comparing a full frontal rigid barrier test to an offset rigid barrier test conducted at the same speed, there is greater likelihood of intrusion. The crash pulse for the offset rigid barrier test would likely have about the same peak acceleration but a longer time duration. An offset deformable barrier test at the same speed would likely result in a lower peak acceleration and about the same time duration as the rigid offset barrier test.
- Comparing a 35 mph offset test to a 30 mph full frontal rigid barrier test, the peak g's are likely to less in the offset test, and the time duration of the crash pulse is likely to be substantially longer.

As noted above, the concept of a high speed unbelted offset deformable barrier test is new, so there are very few available data for this test. However, we have tested two vehicles, the MY 1999 Toyota Tacoma and Dodge Intrepid, in unbelted 56 km/h (35 mph) offset tests using both 50th percentile adult male and 5th percentile adult female test dummies. One vehicle, the Tacoma, was able to meet the proposed injury criteria performance limits without difficulty (for both types of dummies and both left and right impacts), while the other vehicle, the Intrepid, had difficulty, particularly with the Nij injury criteria performance limits. Of course, neither of these vehicles was designed with the offset test in mind, so these tests have little relevance to the issue of whether vehicles could satisfy such a requirement.

Some vehicle manufacturers have expressed concerns about an unbelted high speed offset test. GM has expressed concern about the ability of vehicle sensing systems to be able to sense the soft, deformable barrier face of the offset deformable barrier, and still be able to perform well in real world crashes. According to that company, its review of actual vehicle data traces plotting deceleration over time indicates that the frontal offset barrier impact initially looks much like a low speed crash, where no air bag or just a first stage air bag might be used. Because of this, a sensor system might not recognize until well into the crash that the vehicle is undergoing a higher speed, severe crash. GM believes that if this test were made a part of the standard, manufacturers would either have to design their sensors to fire any time they see a lower speed, soft impact, which would cause more low speed deployments, or design the sensors to optimize for real world crashes and risk failing this performance test in the standard.

Honda expressed concern about the similarity in pulses between the 40 km/h (25 mph) offset deformable barrier and the 56 km/h (35 mph) offset deformable barrier crashes. In an August 26, 1999 comment submitted to the docket, Honda stated that, even though these tests are dissimilar in terms of ultimate severity, the crash pulses looked similar during the initial decision period of up to 30 ms. This in part reflects the fact that the initial phase of the test is measuring the deformation of the soft barrier. According to Honda, the vehicle's analytical system will be unable to discern the crash severity and will not be able to accurately predict what stage to fire, or even whether to fire the air bag in a timely fashion. That company indicated that this may result in poor algorithm design.

For additional analysis of the two alternative unbelted tests, readers are referred to the aforementioned paper and supplement prepared by our Office of Vehicle Safety Research concerning potential test procedures for Standard No. 208 and to the Preliminary Economic Assessment which accompanies this SNPRM.

It is important to note that, whatever unbelted test is included in Standard No. 208, manufacturers will be required under the final rule to certify all of their vehicles to a wide variety of new test requirements, and in a very short period of time. The analysis we presented earlier in this document concerning how many vehicles currently appear to meet the 48 km/h (30 mph) unbelted rigid barrier requirements for 50th percentile adult male dummies was intended to address the allegation that a return to the test would prevent continued use of redesigned air bags and require a return to overly aggressive air bags; it did not represent an analysis of how easy it would be to meet that particular test requirement in the context of the overall set of proposed requirements.

In commenting on the NPRM, vehicle manufacturers indicated that, as they consider various air bag designs, they face trade-offs in meeting different proposed test requirements. For example, the optimum air bag for meeting the unbelted rigid barrier test for the 50th percentile adult male driver dummy would be a large air bag filling the space between the dummy and the steering wheel. This would allow the restraining forces to be imparted earlier in the crash event and exert lower g forces on the occupant to allow optimal ride-down from the crash. A smaller air bag would be optimum for meeting the unbelted perpendicular rigid barrier test for 5th percentile adult female dummy in the full forward seating position, since she is positioned closer to the air bag and has less ride-down space to fill between the dummy and the steering wheel. If an excessively large air bag is used, neck readings for the 5th percentile adult female dummy will increase as the larger air bag pushes the head back. Of course, the smallest possible air bag would be optimum for meeting the proposed low risk deployment tests intended to minimize risks from air bags to out-of-position occupants. However, as air bags shrink,

so does their ability to provide protection, especially to larger occupants in crashes with potential for serious or fatal injuries. We note that while large air bags may be optimum for meeting the 30 mph unbelted rigid barrier test with 50th percentile adult male dummies, vehicle manufacturers have been able to meet the test with air bags of varying sizes.

Recognizing the issues associated with the need to meet all of the proposed tests together, we have tested current vehicles under a variety of proposed test procedures. For four of the vehicles for which we conducted a 48 km/h (30 mph) rigid barrier test using unbelted 50th percentile adult male dummies, we also conducted a 48 km/h (30 mph) rigid barrier test using unbelted 5th percentile adult female dummies. For all these tests, it bears emphasizing that these vehicles were not designed to comply with the final rule that will be issued in this rulemaking. Thus, while it is useful to know whether current vehicles already meet the tests, the test failures can tell us only which vehicles need to be redesigned. They do not indicate that vehicles cannot be redesigned in the time provided by TEA 21 to comply with that final rule.

Three of the four unbelted 5th percentile adult female driver dummy responses in these tests passed all the injury criteria performance limits we are proposing in the SNPRM. (For the same make model vehicles, the 50th percentile adult male driver dummy also passed all the injury criteria performance limits.). In the fourth test, of the MY 1999 Dodge Intrepid, the 5th percentile adult female driver dummy failed both the chest displacement and Nij performance limits; however the 50th percentile adult male driver dummy passed all the relevant injury criteria performance limits when tested in the same vehicle.

Two of the four unbelted 5th percentile adult female passenger dummy responses passed all the injury criteria performance limits. The MY 1999 Dodge Intrepid slightly exceeded the chest g performance limit (with a value of 62.2 g) and the MY 1999 Toyota Tacoma significantly failed to meet the Nij performance limit (with a value of 2.65).

Two of the four vehicles, the MY 1999 Saturn SL1 and the MY 1998 Ford Taurus, however, passed all the injury criteria performance limits for the driver and passenger using both unbelted 5th percentile adult female and unbelted 50th percentile adult male dummies in the rigid barrier crash tests at 48 km/h (30 mph).

We have also recently conducted rigid barrier tests at 48 km/h (30 mph) using belted 50th percentile adult male and belted 5th percentile adult female dummies in MY 1998 and 1999 vehicles. In 18 tests conducted with the belted 50th percentile adult male dummies, the vehicles passed all the proposed injury criteria performance limits for both driver and passenger. In 17 tests conducted with belted 5th percentile adult female dummies, the vehicles passed all the injury criteria performance limits for the passenger dummy; however, the driver dummy exceeded the proposed Nij injury criteria performance limit in approximately 35% of the tests.

We also conducted static out-of-position tests using the 5th percentile adult female driver dummy and 6-year-old child passenger dummy on six MY 1999 vehicles. The vehicles that were selected were the same as those used in the 48 km/h (30 mph) rigid barrier test with unbelted 50th percentile adult male dummies. (Again, we note that the vehicles were not designed with these test requirements in mind.) Four out of six vehicles, including the MY 1999 Saturn SL1, passed all the static out-of-position test requirements on the driver's side. The remaining two vehicles failed the Nij criteria in Position 1, but passed all the criteria in Position 2.

With the 6-year-old child dummies on the passenger side, only one vehicle, the MY 1999 Acura RL with a dual stage inflator, met all the proposed injury criteria performance limits in both Position 1 and Position 2 tests. Only the primary stage was fired in the tests.

Looking at the various tests we have conducted, it appears that the proposed test requirements are achievable by a number of vehicles even though they were not designed to comply with those requirements. These vehicles meet the 48 km/h (30 mph) unbelted barrier test with both unbelted 50th percentile adult male dummies *and* unbelted 5th percentile adult female dummies, *and* the driver side out-of-position test, with single level inflators. The MY 1999 Saturn SL1 appears to be such a vehicle.

Dual level inflators could make it easier to meet the tests. For example, a higher inflation rate could be used for 50th percentile adult males, while a lower inflation rate could be used for 5th percentile adult female drivers with the seat full forward and for child passengers.

We note that, for the passenger side, a weight sensor or other suppression device might be needed to meet passenger side out-of-position requirements for children, even if a dual level inflator is used. Moreover, a weight sensor or other suppression device would likely be needed to meet requirements for rear facing infant seats. However, the use of a weight sensor or other suppression device on the passenger side should not affect the ability of the vehicle to meet the proposed unbelted and belted crash test requirements using 50th percentile adult male dummies and 5th percentile adult female dummies, since the addition of such a device does not affect the characteristics of the air bag itself.

While the proposed requirements appear to be achievable, the number of failures illustrate that many vehicles will need to be redesigned in a short period of time to meet a highly complex set of new requirements. In many cases, manufacturers will be introducing several new technologies simultaneously: dual level inflators, seat belt sensors, weight/pattern seat sensors, seat track position sensors, more complex algorithms, etc.

In this context, we recognize that simultaneous implementation of these various proposals for minimizing risk and enhancing protection will necessitate considerable care and effort by the vehicle manufacturers. In a normal rulemaking, we would have broad discretion to adjust the implementation schedule to facilitate initial compliance. In this rulemaking, our discretion to set the schedule for implementing the amendments required by TEA 21 is limited by that Act. Our final rule must provide that the phasing-in of those amendments begins not later than September 1, 2003, and ends not later than September 1, 2006.

However, we believe that nothing in TEA 21 derogates our inherent authority to make temporary adjustments in the requirements we adopt if, in our judgment, such adjustments are necessary or prudent to promote the smooth and effective achievement of the goals of the amendments. For example, adjustments could be made to test speeds or injury criteria. One possibility would be to issue a final rule temporarily reducing the maximum speed for the unbelted rigid barrier test to 40 km/h (25 mph) (or some other speed, e.g., 44 km/h (27.5 mph)) and then increasing it to 48 km/h (30 mph) after an appropriate period of time, e.g., after the TEA 21 phase-in. Another possibility would be to temporarily permit relaxed injury criteria performance limits (e.g., 72 g chest acceleration limit instead of 60 g chest acceleration limit) in unbelted rigid barrier tests between 25 mph and 30 mph.

This document seeks comment on still another possibility for the final rule: permanently reducing the unbelted rigid barrier test speed to 40 km/h (25 mph) and temporarily leaving the belted rigid barrier test speed at 48 km/h (30 mph). Under the final rule, the latter test speed would later, sometime after the TEA 21 phase-in schedule, increase to 56 km/h (35 mph).[23]

We note that we have previously considered, in rulemaking, a 40 km/h (25 mph) maximum speed for the unbelted rigid barrier test. However, we considered this issue in the context of Standard No. 208's historic requirements, i.e., testing only with 50th percentile adult male dummies and the old injury criteria, which did not include neck criteria.

Fifteen years ago, in our rulemaking establishing automatic protection requirements, GM advocated a 40 km/h (25 mph) unbelted rigid barrier test to facilitate passive interiors, *i.e.*, building in safety by improving such things as the steering columns and padding. At that time, GM believed passive interiors would be better than automatic restraints, *i.e.*, air bags or automatic seat belts.

Based on available test data, we concluded that it was generally evident that it was within the state-of-the art to pass Standard No. 208's head and chest injury criteria at 40 km/h (25 mph) with unbelted 50th percentile adult male dummies without air bags. We stated that we had virtually no data on what diminution in safety would occur if the lower standard were used and that there was no basis for making such a change. See final rule published in the **Federal Register** (49 FR 28962, 28995; July 17, 1984).

We also note that, for the vehicles we recently tested at 48 km/h (30 mph) for this rulemaking, we also tested a small subset at 40 km/h (25 mph) with unbelted 50th percentile male driver and passenger dummies. In the three tests, the vehicles passed all the proposed driver and passenger injury criteria performance limits with one exception involving a model year 1999 Toyota Tacoma. The passenger dummy exceeded the proposed Nij limit in this test. We also conducted two 40 km/h (25 mph) rigid barrier crash tests with unbelted 5th percentile adult female driver and passenger dummies. Again, the vehicles passed all the proposed driver and passenger injury criteria performance limits with one exception involving the model year 1999 Toyota Tacoma. Again, the passenger dummy exceeded the proposed Nij limit on the passenger side.

In light of the fact that vehicle manufacturers are now recommending an unbelted rigid barrier crash test alternative that omits the oblique tests, we also note that we addressed the possibility of eliminating the unbelted oblique tests in the aftermath of that same rulemaking. See NPRM published in the **Federal Register** (50 FR 14589, 14592–14594) on April 12, 1985, and final rule published in the **Federal Register** (51 FR 9800, 9801–9802) on March 21, 1986.

We decided to retain the oblique tests in that rulemaking. We noted that although oblique tests generally produce lower injury levels, they do not consistently produce that result. We also expressed concern that air bags that only need to meet a perpendicular impact could be made much smaller. We stated that, in such a case, in an oblique crash, an unbelted occupant could roll off the smaller bag and strike the A-pillar or instrument panel.

We welcome comments on how we should consider our past decisions and the rationales underlying them in this current rulemaking.

We note that while we are seeking comments on alternative unbelted tests, including alternative speeds and injury criteria, we plan to adopt a single unbelted test or set of unbelted tests for the final rule. That is, we do not plan to provide a manufacturer option in this area. Depending on the comments, we may adopt some combination of the tests discussed above.

To help us reach a decision on what unbelted test requirements should be included in Standard No. 208, we request commenters to address the following questions:

1. How do the two proposed alternative unbelted crash tests compare in representing the range of frontal crashes which have a potential to cause serious injuries or fatalities? Please answer this separately for the low and high end of the proposed range of upper speeds for each alternative, *i.e.*, 40 and 48 km/h (25 and 30 mph) for the unbelted rigid barrier test and 48 and 56 km/h (30 mph and 35 mph) for the unbelted offset deformable barrier test. In answering this question, please consider the entire range of tests incorporated into each alternative. Please specifically address representativeness with respect to (a) crash pulses, (b) crash severities, and (c) occupant positioning, and provide separate answers for crashes likely to cause fatalities and crashes likely to cause serious but not fatal injuries.

2. How do the two alternatives compare with respect to repeatability, reproducibility, objectivity, and practicability issues?

3. What effects would each of the alternative types of unbelted tests and each of the alternative maximum test speeds discussed in this SNPRM have on air bag design, performance, risks and benefits, and on amount of depowering permitted? Answers should focus particularly on unbelted 40 km/h (25 mph)/belted 56 km/h (35 mph) versus unbelted 48 km/h (30 mph)/ belted 48 km/h (30 mph), and on unbelted 56 km/h (35 mph)offset/belted 48 km/h (30 mph) versus unbelted 48 km/h (30 mph)/belted 48 km/h (30 mph). To what extent can it be concluded that a countermeasure needed to meet each alternative would ensure protection in frontal crashes not directly represented by the tests included in that alternative, e.g., crashes with different pulses (harder or softer) or different severities (more severe or less severe)? Please quantify, to the extent possible, the amount of protection that would be ensured in other types of crashes, i.e., what the injury criteria measurements would be. Please address whether and how the answer to this question would differ for the low and high end of the proposed range of upper speeds for each alternative.

4. To what extent would current air bag systems (or air bag systems being developed for near-term application) have difficulty distinguishing between a high speed offset deformable barrier test and a low speed crash during the time the decision whether to deploy the air bag must be made? What technological solutions, e.g., advanced sensing systems (including use of satellite sensors and improved algorithms) are available to address this potential problem? How should we consider this issue in selecting among the available unbelted crash test alternatives?

5. One reason for adopting a test requirement that is less stringent than another during the TEA 21 phase-in period would be to provide an extra margin of flexibility and facilitate compliance during the time vehicle manufacturers are introducing advanced air bags incorporating multiple new technologies. An example of such an approach would be the phase-in sequence described above in which the final rule would provide that the maximum speed for the unbelted rigid barrier test would initially be 40 km/h

[23] We recognize that this alternative would increase the test speed of the belted test to the level of the belted test currently conducted under NHTSA's NCAP program. If this alternative were chosen, NHTSA contemplates retaining the current NCAP test speed through the end of the TEA 21 phase-in period. The agency would then review that NCAP test.

(25 mph) (or some other speed) and then increase to 48 km/h (30 mph) after an appropriate fixed period of time. If we were to adopt a less stringent test requirement for an initial period, how long should that period be and why?

6. What factors should we consider in selecting a maximum speed for the two alternatives?

7. The severity of a crash test requirement could be adjusted either by reducing the maximum speed at which the test is conducted or by leaving the maximum speed unchanged, but relaxing the injury criteria performance limits for the tests that are conducted near the upper end of the range of test speeds. For example, if we were to reduce temporarily the severity of the unbelted up-to-48 km/h (30 mph) rigid barrier test, one possible way of doing this would be to reduce the stringency of the injury criteria performance limits between 40 km/h (25 mph) (or some other speed) and 48 km/h (30 mph). While this could provide significant increased flexibility to vehicle manufacturers, it could still address the issue of protection in higher speed crashes. Also, certification and compliance test data could be directly compared to that obtained in 48 km/h (30 mph) rigid barrier crash tests over many years. We specifically request comments on this approach and what injury criteria performance limits would be appropriate if we were to adopt it.

8. Should we consider combining aspects from each of the two unbelted alternatives? For example, the unbelted rigid barrier test alternative includes both perpendicular and angle tests. A variation on this approach might be to retain the perpendicular test, but replace the angle tests with offset deformable barrier tests. We request comments on this or any other possible ways of combining aspects from the two unbelted alternatives.

9. Given the existing and anticipated advanced air bag technologies, to what extent is it necessary, and why, to link decisions about improving protection to decisions about minimizing the risks? What portion of those risks would remain after full use of existing and anticipated advanced air bag technologies?

10. If it is believed that a return to the 48 km/h (30 mph) unbelted barrier test would necessitate an increase in the power of any vehicle's air bags, indicate which models would need air bags with increased power and indicate the potential amount of increase. Explain how the amount of needed increase was determined and the effects on safety of such an increase.

11. To what extent could non-air bag changes, such as improved crush zones, be used to avoid any increases in air bag aggressivity if there were a return to the 48 km/h (30 mph) unbelted barrier test? To what extent can advanced features such as improved fold patterns, lighter fabrics and recessed air bag modules be used to offset, or more than offset, any increases in power so that those increases do not result in increased air bag aggressivity?

12. To what extent could the various types of static suppression be used to reduce the risk to children? In what circumstances would such suppression not minimize risk? To what extent could the lower level of dual-level inflators be linked with sensors of such factors as crash severity, seat position, belt use and weight/pattern be used to reduce the risk to drivers who adjust their seats full forward or nearly full forward? In what circumstances would such technology not minimize risk? If there would be residual risk to children or to those drivers after the use of those technologies, what is the magnitude of that risk? To what extent would that residual risk be affected by the decision regarding an unbelted test requirement?

13. To what extent does each vehicle manufacturer plan to take full advantage, across their vehicle fleets, of the advanced air bag and other technologies mentioned in questions 11 and 12 above?

14. Given that available test data indicate that some vehicles already meet or exceed the injury criteria for 50th percentile male dummies in unbelted 48 km/h (30 mph) tests, explain why those margins of compliance cannot be increased in the time provided by the TEA 21 schedule and why other vehicles cannot be designed to achieve similar margins of compliance.

15. Provide test data and analysis to support the answers to questions 1–14.

16. To what extent do available test data regarding advanced air bag technologies support the appropriateness of or need for each of the alternative types unbelted tests and each of the alternative maximum test speeds discussed in this SNPRM? Answers should focus particularly on unbelted 40 km/h (25 mph)/belted 56 km/h (35 mph) versus unbelted 48 km/h (30 mph)/belted 48 km/h (30 mph), and on unbelted 56 km/h (35 mph)offset/belted 48 km/h (30 mph) versus unbelted 48 km/h (30 mph)/ belted 48 km/h (30 mph).

17. What lead time would be needed for a 56 km/h (35 mph) belted rigid barrier test requirement?

ii. Proposed Array of Crash Test Requirements.

As noted earlier, vehicle manufacturers argued that some of the crash test requirements we proposed in the NPRM were redundant, given the other tests. In developing this SNPRM, we have carefully considered whether we could reduce the number of proposed tests without significantly affecting the benefits of the NPRM. Using the methodology for counting tests discussed earlier in this document, we are proposing a total of nine crash tests instead of 14.

The specific nine tests differ, of course, depending on which alternative unbelted tests are included.

The set of nine tests which includes the unbelted rigid barrier test includes the following tests:

—belted rigid barrier test (perpendicular and up to ± 30 degrees) using 50th percentile adult male dummies (counts as three tests: one at +30 degrees, one perpendicular, and one at − 30 degrees);

—belted rigid barrier test (perpendicular only) using 5th percentile adult female dummies;

—unbelted rigid barrier test using 50th percentile adult male dummies (counts as three tests);

—unbelted rigid barrier test (perpendicular only) using 5th percentile adult female dummies; and

—belted up-to-40 km/h (25 mph) offset deformable barrier test (driver side of the vehicle engaged with the barrier) using 5th percentile adult female dummies.

This set of proposed tests eliminates five tests that were included in the NPRM. First, for both the belted and unbelted rigid barrier tests, we are proposing to test the 5th percentile adult female dummy in the perpendicular test only, i.e., not in oblique tests. This would eliminate four tests.

In many cases, crash tests become less stringent as dummies become lighter and/or closer to the air bag. However, this is not true if the dummy is so close that it contacts the air bag early in the deployment process. For the rigid barrier test using 5th percentile adult female dummies, the condition in which this would most likely occur is in a perpendicular impact. Therefore, we believe that the perpendicular tests (belted and unbelted) would address this concern. We also believe that, if the vehicle can pass the perpendicular test with 5th percentile female dummies and the oblique tests with 50th percentile adult male dummies, it will also pass

the oblique tests using 5th percentile adult female dummies.

The primary function of the oblique test is to assure a wide air bag. The 50th percentile adult male dummy presents a greater challenge than the 5th percentile adult female dummy does in such a test. Thus, the oblique tests with the 5th percentile adult female dummy would add test costs without providing additional safety benefits.

Second, for the belted up-to-40 km/h (25 mph) offset deformable barrier test, we are proposing that the test be conducted only with the driver side of the vehicle engaged with the barrier. This would eliminate one additional test. We believe that testing the vehicle on the driver side only would be a sufficient means of testing air bag sensing systems.

We note, by contrast, that we believe it would be necessary to test the vehicle with each side of the vehicle engaged if we adopted the unbelted high speed offset deformable barrier test instead of the unbelted rigid barrier test to ensure that the air bags are wide enough to provide protection for occupants that move forward in a direction that is either to the right or left of perpendicular.

The set of nine tests which includes the unbelted high speed offset deformable barrier test includes the following tests:

—belted rigid barrier test (perpendicular and ± 30 degrees) using 50th percentile adult male dummies (counts as three tests);
—belted rigid barrier test (perpendicular only) using 5th percentile adult female dummies;
—unbelted offset deformable barrier test (driver and passenger sides of vehicle engaging the barrier) using 50th percentile adult male dummies (counts as two tests);
—unbelted offset deformable barrier test (driver and passenger sides of vehicle engaging the barrier) using 5th percentile adult female dummies (counts as two tests); and
—belted up-to-40 km/h (25 mph) offset deformable barrier test (driver side of the vehicle engaged with the barrier) using 5th percentile adult female dummies.

In the NPRM, we proposed specifications for the deformable barrier to be used in offset deformable barrier tests. The specifications for this barrier would be included in Part 587. We are not republishing the specifications in this SNPRM but expect to proceed to a final rule in a separate document. We do not expect any significant changes from the NPRM.

We also proposed in the NPRM to include, for all crash tests specified by the standard, certain vehicle integrity requirements. The proposal specified that vehicle doors may not open during the crash test and that, after the crash test, it must be possible for technicians to open the doors and move the seats as necessary to allow evacuation of all occupants.

Several commenters raised concerns about these proposed requirements, including ones relating to objectivity. After considering the comments, we have decided to drop these requirements from the SNPRM.

While we believe it is important for doors to remain closed during crashes, and for occupants to be extricated from a vehicle after a crash, we believe that significant additional development of the proposed test procedures would be necessary for a final rule. Moreover, we believe this subject is sufficiently distinct from advanced air bags so as to best be considered in other contexts, particularly with the need for us to issue a final rule on advanced air bags by March 1, 2000.

iii. Location and Seating Procedure for 5th Percentile Adult Female Dummy

A seating procedure for the 5th percentile adult female test dummy is detailed in section S16 of the proposed regulatory text. The procedure takes into account two separate concerns. The first issue is where to place the vehicle seat during testing; the second issue is how to place the dummy in the vehicle seat.

From the outset, crash tests with 50th percentile adult male dummies have been conducted with the seat in the middle seat track position. We do not propose to change that provision. However, we have proposed in the NPRM and this SNPRM to conduct tests with 5th percentile adult female dummies with both the driver and passenger seats in the full forward position. We believe that this is the most vulnerable position for occupants in the real world and is also the most demanding for the occupant protection system. Individual drivers who are approximately the size of the 5th percentile adult female dummy are the most likely, because of their size, to sit farther forward than the middle seat track position and are more likely than larger drivers to use the full forward position. Occupants of any size may occasionally use that seat position on the passenger side, depending on the passenger or cargo space needs in the back seat. As a general principle, we believe that people should be able to safely use a seat as it was designed to be used.

If manufacturers find they cannot provide protection to individuals properly positioned in the forward track position, they have the option of moving that position back, particularly on the passenger side. With respect to the driver side, manufacturers might have to make other adjustments to the vehicle, such as providing adjustable pedals, that would allow small-statured drivers to operate the vehicle.

Nevertheless, we are aware that the placement of the 5th percentile adult female dummy in the full forward position tests the occupant restraint system under a condition that may rarely occur in the real world. The University of Michigan Transportation Research Institute (UMTRI) has found that drivers who are approximately the same size as the 5th percentile adult female dummy generally do not sit in the full forward seat track position. Other commenters have stated that the front passenger seat would never need to be placed in the full forward position due to occupant size. Rather, placement of the passenger seat in that track position would only occur on those rare occasions when the entire space in the back seat was needed for cargo or other purposes.

Another concern is whether, in order to meet tests for conditions that rarely occur in the real world, manufacturers might select air bag designs that offer reduced fatality-reducing protection for conditions that are more common.

We also note that, under our proposal, the 5th percentile adult female dummy would also be tested on the driver side in two out-of-position tests that place the dummy directly on the air bag module. While this would not ensure protection in a high speed crash, it would ensure that the air bag does not cause harm.

Accordingly, we are interested in comments on whether testing the 5th percentile adult female dummy with the seat position in something other than the full forward seat track position would adequately protect properly-seated individuals of all sizes while potentially allowing more design freedom.

The proposed seating procedure was developed considering the work performed by the SAE Hybrid III 5th Seating Procedure Task Group and by NHTSA's Vehicle Research and Test Center (VRTC). The 50th percentile Hybrid III adult male dummy is the only dummy currently used for Standard No. 208 compliance crash testing. For that testing, the dummy is positioned according to S10 of the standard. As part of that procedure, the H-point of the dummy is located using the manikin

and procedures in SAE Standard J826.[24] For the 5th percentile adult female dummy, the SAE task group is currently voting and commenting on the acceptability of a procedure that uses an SAE Standard J826 50th percentile adult male manikin with reduced length legs to locate the H-point of the 5th percentile adult female dummy. Then a dummy positioning procedure is used to place the female dummy at the H-point located by the modified manikin. It is unknown when this procedure will be completed.

Given the absence of an SAE-accepted seating procedure for the 5th percentile adult female dummy, we decided to perform some of our own positioning tests so that a 5th percentile adult female procedure would be available for this rule. VRTC positioned a 5th percentile adult female dummy several times in various vehicles using a positioning procedure without intermediate seating devices. The H-point location was measured and the variation in H-point location between repeats was reviewed. Then the 5th percentile adult female prototype manikin (supplied by Ford Motor Company) was used to locate the H-point with respect to the seat. The variation in H-point location between repeats was reviewed.

The procedures demonstrated that the location of the H-point of the 5th percentile adult female dummy and the H-point of the 5th percentile adult female prototype manikin with respect to the seat were very similar. Longitudinally, the difference in the average ''H'' point location between the dummy and the manikin varied from 1 mm to 17 mm (0.04 in. to 0.67 in.). Vertically, the comparable figures were 4 mm to 10 mm (0.16 in. to 0.41 in.). Since there was little difference between the two methods, the extra step of using the manikin to determine the H-point location was found to be unnecessary. In addition, there is no guarantee of when the 5th percentile adult female manikin would be available and accepted for use by the safety community. Therefore, VRTC developed the procedures that are in section S16 of the proposed rule.

We believe it would be appropriate to use the manikin procedure for the 50th percentile adult male dummy and not for the 5th percentile adult female dummy. The 50th percentile adult male dummy (78 kg (171 pounds)) is 28 kg (63 pounds) heavier than the 5th percentile adult female (49 kg (108 pounds)) and therefore much more difficult to maneuver into position. The 50th percentile adult male manikin H-point provides a specific target for this heavy dummy so that it can be positioned in the seat. The lighter 5th percentile adult female dummy does not need this target. In addition, the 5th percentile adult female buttocks profile may fit differently into a highly curved fitted seat than the 50th percentile adult male dummy and therefore the use of the 50th percentile adult manikin for the 5th percentile adult female dummy seating procedure may cause more variability in dummy positioning. Thus we believe the proposed non-manikin procedure makes it easier to repeatedly position the 5th percentile adult female dummy.

2. Tests for Requirements To Minimize the Risk to Infants, Children and Other Occupants From Injuries and Deaths Caused by Air Bags

a. Safety of Infants.

Infants in rear-facing child safety seats (RFCSS) are at significant risk from deploying air bags, since the rear facing orientation of the child seat places their heads extremely close to the air bag cover. This is why we emphasize that infants in RFCSS must never be placed in the front seat unless the air bag is turned off.

In the NPRM, in order to address the risks air bags pose to infants in RFCSS, we proposed two alternative test requirements, the selection of which would be at the option of the manufacturer. The two manufacturer options were: (1) test requirements for an automatic air bag suppression feature or (2) test requirements for low-risk deployment involving deployment of the air bag in the presence of a 12-month old Child Restraint Air Bag Interaction (CRABI) dummy in a RFCSS.

Under the NPRM, if the automatic suppression feature option were selected, the air bag would need to be suppressed during several static tests using, in the right front passenger seat, a 12 month old child dummy in a RFCSS, and also during rough road tests. The RFCSS would be placed in a variety of different positions during the static tests. In order to ensure that the suppression feature did not inappropriately suppress the air bag for small-statured adults, the air bag would need to be activated during several static tests using a 5th percentile adult female dummy in the right front passenger seat, and also during rough road tests using that dummy.

If the low risk deployment option were selected, a vehicle would be required to meet specified injury criteria when the passenger air bag is deployed in the presence of a 12 month old child dummy placed in a RFCSS. In the case of air bags with multiple inflation levels, the injury criteria would need to be met for all levels.

For our SNPRM, we are proposing the same two basic options, but with several changes.

First, under the NPRM, manufacturers would have been required to assure compliance in tests using any child restraint capable of being used in the rear facing position which was manufactured for sale in the United States between two years and ten years prior to the date the first vehicle of the MY carline of which the vehicle is a part was first offered for sale to a consumer. For our SNPRM, manufacturers would be required to assure compliance using any child restraint included in a list of representative child restraints that we are proposing to add as an appendix to Standard No. 208. The list would be periodically updated to reflect changes in the types and designs of available child restraints. We believe this approach addresses the practicability and cost concerns raised by commenters but still ensures that vehicle manufacturers take account of the variety of different RFCSS as they design their systems. The issue of how we selected the proposed list of child restraints is discussed later in this notice.

Second, our SNPRM drops the proposed rough road tests. We proposed those tests to address the possibility that some types of automatic suppression features, e.g., weight sensors, might be ''fooled'' by occupant movement associated with riding on rough roads. The proposed tests were intended to ensure such devices were designed so they do not turn on the air bag in the presence of a small child who is bouncing as a result of riding on a rough road, and so that they do not turn off the air bag in the presence of a small-statured adult who is bouncing as a result of riding on a rough road.

After considering the comments, we have tentatively concluded that it is not necessary to include rough road tests in Standard No. 208. As we have discussed in other areas, in the context of a statutory scheme requiring us to issue performance requirements (as opposed to one requiring design requirements or government approval), it is neither appropriate nor possible for us to

[24] The following dockets discussed the use of the J826 manikin for the 50th percentile adult male dummy.

1. 74–14–Notice 39: NPRM to amend Part 572, allowing optional use of Hybrid II or III, sunset for use of Hybrid II.

2. 74–14–Notice 45: Final Rule adopting Hybrid III.

address every real world variable that can affect safety. Ultimately, the vehicle manufacturers must be expected to design their vehicles not only so they meet the performance requirements specified by the Federal motor vehicle safety standards, but also in light of the full range of real world conditions their vehicles will experience.

We believe rough road performance is an area that vehicle manufacturers will consider and address in the absence of Federal requirements. We also note that a number of technical issues have been raised about the proposed rough road tests, including how to keep dummies from falling over during the tests. We do not believe it would be a good use of agency resources at this time to make further efforts to develop test procedures in this area. If necessary, failures to assure adequate air bag performance in the rough road context could be addressed under our authority to investigate safety-related defects.

Third, for the proposed static tests that must result in deactivation of the passenger air bag, we have reduced the number of positions in which the infant dummy/child seat is tested from seven to five. Our proposal adds one new position, where the RFCSS is oriented so that the infant faces forward and the seat is then tipped against the instrument panel. This is a position that could occur as a result of pre-impact braking if the RFCSS is not secured by the vehicle belt system. We have dropped four of the positions proposed in the NPRM in order to reduce test complexity and costs. We believe that systems that would be suppressed at the five proposed positions would also be suppressed at the other positions.

Fourth, for the tests designed to ensure that the suppression feature does not inappropriately suppress the air bag for small statured adults, human beings could be used in the place of 5th percentile adult female dummies. The subject of permitting human beings to be used in place of dummies for certain static tests is discussed in the next section.

Fifth, we have made a change with respect to how air bags with multiple inflation levels would be tested for the low risk deployment test. As indicated above, we proposed in the NPRM to require injury criteria to be met for all levels of inflation. This reflected the fact that a child in a RFCSS would be extremely close to the passenger air bag in any crash.

We have not changed our basic philosophy on this issue, but want to address the possibility that vehicles might be designed so that only a lower inflation level deploys in the presence of a RFCSS, regardless of crash severity. To address this possibility, we are proposing in this SNPRM to require injury criteria to be met for any stage or combination of stages which may deploy in the presence of an infant in a RFCSS in a rigid barrier crash test at speeds up to 64 km/h (40 mph). We believe that all stages of inflation that would deploy in the presence of a RFCSS would be encompassed in crash tests at that range of severity levels.

b. Safety of Young Children.

Young children are at special risk from air bags because, when unbelted, they are easily propelled close to the air bag as a result of pre-crash braking. Their small size and weight also makes them more vulnerable to injury when interacting with a deploying air bag. We strongly recommend that young children ride in the back seat, because the back seat is safer whether or not a vehicle has air bags.

In the NPRM, in order to address the risks air bags pose to young children who do ride in the front seat, we proposed requirements using both 3-year old and 6-year old child dummies. We proposed four alternative test requirements, the selection of which would be at the option of the manufacturer. Manufacturers could select different options for the 3-year-old and 6-year-old dummies.

The four manufacturer options were: (1) test requirements for an air bag suppression feature that suppresses the air bag when a child is present, e.g., a weight or size sensor, (2) test requirements for an air bag suppression feature that suppresses the air bag when an occupant is out of position, (3) test requirements for low risk deployment involving deployment of the air bag in the presence of out-of-position 3-year old and 6-year-old child dummies, or (4) full scale dynamic out-of-position test requirements, which include pre-impact braking as part of the test procedure.

Our SNPRM follows the same basic approach as the NPRM, but with several differences.

Most significantly, the number and type of manufacturer options are changed somewhat. Our SNPRM continues to include, with certain changes, the first and third of the options listed above, i.e., test requirements for an air bag suppression feature that suppresses the air bag when a child is present, e.g., a weight or size sensor, and test requirements for low risk deployment involving deployment of the air bag in the presence of out-of-position 3-year-old and 6-year-old child dummies.

Our SNPRM also includes the second option, test requirements for an air bag suppression feature that suppresses the air bag when an occupant is out-of-position, but with major changes. The fourth option, testing with dynamic pre-crash braking, has been dropped from this rulemaking.

In the sections which follow, we discuss the three options we are including in this SNPRM, as well as our reasons for any significant changes and for dropping the fourth option.

Requirements for an air bag suppression feature (e.g., weight or size sensor) that suppresses the air bag when a child is present. As discussed in the NPRM, these requirements would be very similar to those being proposed with respect to a suppression feature for infants in RFCSS. Under the NPRM, if this option were selected, the air bag would need to be deactivated during several static tests using, in the right front passenger seat, a 3-year-old or 6-year-old child dummy and also during rough road tests. The child dummy would be placed in a variety of different positions during the static tests. Some of the positions specify placing the dummy in a forward-facing child seat or booster seat. The air bag would be required to be activated during specified tests using a 5th percentile adult female dummy.

For the SNPRM, we have made a number of changes similar to those discussed above with respect to a suppression feature for infants in RFCSS. In particular:

- Instead of requiring manufacturers to assure compliance in tests using any child restraint which was manufactured for sale in the United States for a specified number of years prior to manufacture, we would require them to assure compliance using any child restraint included in a list of representative child restraints that we are proposing to add as an appendix to Standard No. 208.
- We are dropping the proposed rough road tests.
- For the proposed static tests which must result in deactivation of the passenger air bag, we have reduced the number of positions in which the child dummy or child dummy/child seat are tested. For the three-year-old child dummy, the number of positions is reduced from 17 to 10. For the six-year-old child dummy, the number of positions is reduced from nine to six. We believe that systems that would be suppressed at the proposed positions would also be suppressed at the other positions.

We are also proposing to allow manufacturers to comply with and certify to these suppression requirements using children, instead of

3-year-old and 6-year-old child dummies. Adult females could also be used in the place of 5th percentile adult female dummies for the portions of those test requirements which make sure that the air bag is activated for adults.

We are proposing to permit manufacturers to use human beings in light of concerns that current dummies may not be sufficiently human-like to be recognized by some of the advanced technologies under development. For example, suppression devices that work by sensing the distributed weight pattern of a human being may not recognize the pattern of a test dummy. If a manufacturer selects this option, the requirements would need to be met at each of the relevant positions for any human being within a specified weight/height range for 3-year-old and 6-year-old children and 5th percentile adult females.

It is important to emphasize that these tests simply involve a child or adult assuming specified positions in the vehicle, with a technician checking (typically by looking at a light) whether the air bag would be activated or deactivated; these tests do not involve deploying the air bag or moving the vehicle. To ensure absolute safety, we are proposing to require manufacturers selecting this option to provide a method to assure that the air bag will not activate during testing; such assurance may be made by removal of the air bag. The manufacturer would also be required to provide a method to assure that the same test results would be obtained if the air bag had not been deactivated or removed.

Test requirements for a feature that suppresses the air bag when a child is out-of-position. As discussed in the NPRM, we believe that a feature that suppresses the air bag when an occupant is out-of-position, either initially or because of moving into such a location during pre-crash braking, needs to be tested very differently from one that suppresses the air bag whenever a child is present. While various static tests can be used to determine whether the latter type of suppression device is effective, they would be of limited utility in testing a feature that suppresses the air bag when an occupant moves into an out-of-position location. This is because one of the key criteria in determining whether the dynamic out-of-position suppression feature is effective is timing, *i.e.*, whether the feature works quickly enough in a situation where an occupant is propelled out of position as a result of pre-crash braking (or other pre-crash maneuvers). We have accordingly developed separate requirements for such dynamic suppression devices.

Under the NPRM, if this option were selected by the vehicle manufacturer, the manufacturer would be required to provide a telltale indicating whether the air bag was activated or deactivated. Operation of the suppression feature would be tested through the use of a moving test device which would be guided toward the area in the vehicle where the air bag is stored.

In the NPRM, we summarized the proposed test requirements as follows:

> [The] test device would begin its course of travel in a forward direction toward a target area inside the vehicle. This target area, the air bag suppression zone, consists of a portion of a circle centered on the geometric center of the vehicle's air bag cover. The function of the air bag suppression system would be tested through the use of a headform propelled toward the air bag suppression zone at any speed up to 11 km/h (7 mph)—equivalent to a typical speed that the head of an occupant attains in pre-crash braking. When the test fixture enters the area near the air bag—the air bag suppression zone—where injuries are likely to occur if the air bag deploys, the telltale is monitored to determine if the suppression feature has disabled the air bag. . . .
>
> The automatic suppression plane of the vehicle, the point at which the air bag suppression feature must be activated when the plane is crossed by the headform, is located at that point rearward of the air bag and forwardmost of the center of gravity of the head of a seated occupant which the manufacturer determines to be that point where, if the air bag is deployed, a 3-year-old child dummy would meet specified injury criteria.

63 FR 49974, September 18, 1998.

We received a number of comments on our proposal in this area. These comments were submitted by manufacturers, suppliers, industry groups and safety organizations.

While the comments indicated general support for a test option that would permit this type of suppression design, the commenters raised many issues about the feasibility and appropriateness of the agency's proposed test procedure. We note that while much work is currently being done on the development of dynamic automatic suppression systems (DASS), the technology is still not mature. In addition, a number of differing technologies are currently being considered. Each one of these technologies has particular attributes which affect the appropriateness of the means used to evaluate its performance. This makes our task in formulating performance requirements and test procedures much more difficult.

For this SNPRM, we have decided to drop the out-of-position suppression system test proposed in the NPRM. After considering the comments, we have concluded that procedure has several flaws.

First, the use of a test headform, while allowing a quasi-static, in-vehicle test, appears to be inappropriate for several technologies now under consideration. In particular, the use of a headform alone, without an accompanying torso, presents severe difficulties for ultrasound based systems. In actual use, as opposed to a test, these systems use sound reflections from the torso as well as the head, in order to locate and track an occupant.

We are also concerned that the use of a headform alone would not be appropriate for a DASS that uses information from multiple types of sensors. For example, seat belt sensors, seat mat pressure sensors, seat-mounted capacitance sensors, and seat location sensors might be incorporated in a suppression system to locate an occupant or measure the characteristics of an occupant and to assist the system in deciding whether to suppress an air bag.

Second, the proposed test procedure's inclusion of a quasi-static, in-vehicle test may be inappropriate for evaluating the performance of some DASS designs. A system using inputs such as crash severity (change in velocity, rate of deceleration, etc.) could not be adequately tested by a quasi-static test. Similarly, such a test may not be adequately representative of an actual crash.

However, we believe that DASS holds significant promise for improving occupant safety. Instead of foreclosing the use of such technology as a means of compliance, we have tentatively concluded that continued development of this technology warrants a different approach to rulemaking.

We are therefore proposing an option which would specify minimum performance requirements for DASS, in conjunction with an amendment to our procedures governing petitions for rulemaking (49 CFR Part 552) that would facilitate expedited consideration and, if appropriate, adoption of a test procedure when technological advances make such dynamic suppression systems feasible. Under this SNPRM, we are proposing to require manufacturers seeking to manufacture vehicles under this compliance option to equip those vehicles with a DASS that automatically controls air bag deployment by sensing the location and the characteristics of an occupant, and determining, based on that information, whether the air bag

should be deployed. The DASS must be capable of turning off the air bag when an occupant enters into an Automatic Suppression Zone (ASZ) defined by the vehicle manufacturer.

The proposal provides for specific expedited rulemaking procedures regarding the test procedures for evaluating these systems. Under these procedures, interested persons (which as a practical matter would likely be either vehicle manufacturers or air bag manufacturers) could submit a petition for rulemaking to establish, on an expedited basis, a test procedure for evaluating a DASS. Target time limits for each phase of such a rulemaking are proposed. As the petition would serve as a basis for our expedited adoption of a test procedure, it would need to contain specific detailed information. Included in this required information would be a complete description of the specifications, design, and performance of the system or systems to be tested by the suggested test; drawings and/or representative samples of the test devices and equipment to be employed in the test; test procedures, including test device positioning procedures for the suggested test; and data and films generated in performing the proposed test. Of course, the test must meet applicable statutory requirements relating to Federal motor vehicle safety standards.

We could reject or withhold consideration of any petition that is incomplete. The petition would need to be submitted nine months before the requested effective date, to allow sufficient time for agency review and public comment.

While a petitioner could submit confidential information in support of its petition, it would need to make public the complete test procedure and a sufficient general description of the system to enable us to provide a meaningful opportunity for public comment.

If the agency published a notice proposing the adoption of the requested test procedure, it would then consider the public comments and decide whether the procedure should be added to Standard No. 208. If it decided to do so, and if the procedure were suitable for the DASS of any other vehicles, then the procedure could be used by those manufacturers of those vehicles as well as by the petitioning manufacturer.

The agency emphasizes that its intention is that Standard No. 208 ultimately provide that all similar DASSs, e.g., those relying on the same types of sensors, would be tested in the same fashion. Initially, however, the agency's efforts to facilitate the quick introduction of DASSs by conducting expedited rulemakings might result, in some cases, in the adoption of different procedures for similar DASSs. To minimize this possibility, the agency would expect manufacturers which decide to petition for the adoption of a procedure for a DASS, instead of relying upon a previously adopted procedure for the same or similar type of DASS, to justify the need for a new and different procedure. Further, the agency would seek in the long run to amend Standard No. 208 to eliminate any unnecessary duplication or variation in test procedures.

Static tests to assure low-risk deployment of the air bag in the presence of out-of-position 3-year-old and 6-year-old child dummies. Our proposal in this area is not significantly different from the NPRM. If the low risk deployment option were selected, a vehicle would be required to meet specified injury criteria when the passenger air bag is deployed in the presence of out-of-position 3-year-old and 6-year-old child dummies. We are proposing that it be conducted at two positions which tend to be ''worst case'' positions in terms of injury risk. We are also proposing more detailed positioning procedures for these two tests than for many of those proposed for the static suppression tests, since injury measures may vary considerably with position.

In the case of air bags with multiple inflation levels, the injury criteria would need to be met only for the levels that would be deployed in lower severity crashes. While an infant in a RFCSS would always be extremely close to the passenger air bag, this is not true for older children. An older child would most likely be extremely close to the air bag in lower severity crashes, following pre-crash braking.

In the NPRM, we proposed that the injury criteria would need to be met only for the inflation levels that would be deployed in crashes of 32 km/h (20 mph) or below. In order to determine what inflation levels would deploy in such crashes, we proposed a test procedure which included three types of crash tests: a rigid barrier test, an offset frontal deformable barrier test, and a pole test.

For the SNPRM, we are proposing that the injury criteria in static out-of-position tests would need to be met only for the levels that would be deployed in crashes of 29 km/h (18 mph) or below. We have reduced the upper speed from 32 to 29 km/h (20 mph to 18 mph) because some vehicle manufacturers may need to deploy both stages of a dual stage inflator in crashes with delta V's just over 32 km/h (20 mph), and because of the ''gray zone'' where it is uncertain whether one or both stages may deploy. We are also proposing to specify only a rigid barrier test for purposes of determining what inflation level would deploy in such crashes. To the extent that higher inflation level air bag deployments do not occur in rigid barrier tests at speeds up to 29 km/h (18 mph), we do not believe that those higher inflation level air bag deployments would occur in offset frontal deformable barrier tests or pole crashes at the same speed.

As noted earlier, we have tested six MY 1999 vehicles to the proposed out-of-position tests using 6-year-old child dummies. Only one vehicle, the MY 1999 Acura RL with a dual stage inflator, met all the proposed injury criteria performance limits for the 6-year-old child dummy in both Position 1 and Position 2 tests. This was the only one of the six vehicles with a dual stage inflator. Only the first stage was fired in the tests. This test illustrates the potential of dual stage inflators to meet the proposed out-of-position requirements using 3-year-old and 6-year-old child dummies.

Elimination of option for full scale dynamic out-of-position test requirements, which include pre-impact braking as part of the test procedure. In the NPRM, we included an option under which a vehicle would be required to meet injury criteria in a rigid barrier crash test that included pre-impact braking as part of the test procedure, using unrestrained 3-year-old or 6-year-old child dummies. We have decided to drop this option.

As discussed in the NPRM, this was a new test and there were many uncertainties. After considering the comments, we have decided to drop this option at this time. We were persuaded by the commenters that significant additional development would be needed in the proposed test procedure to make it appropriate for a Federal motor vehicle safety standard. Moreover, we do not believe that such development could be completed in a timely manner for this rulemaking. We also believe the other options address the various types of technologies under development, and that this one is not necessary. However, as noted before, a manufacturer petitioning for a test procedure for dynamic automatic suppression systems could suggest a procedure using a full scale dynamic barrier test with pre-crash braking.

c. Safety of Small Teenage and Adult Drivers.

Out-of-position drivers are at risk from air bags if they are extremely close

to the air bag at time of deployment. While any driver could potentially become out of position, small-statured drivers are more likely to become out of position because they sit closer to the steering wheel than larger drivers.

The NPRM, in order to address the risks air bags pose to out-of-position drivers, we proposed requirements using 5th percentile adult female dummies. We proposed three alternative test requirements, the selection of which would be at the option of the manufacturer.

The manufacturer options proposed in the NPRM were similar to those using 3-year-old and 6-year-old child dummies, with one significant exception. Since air bags provide safety benefits to small-statured drivers, it is not appropriate to permit manufacturers to suppress air bag deployment under all conditions in the presence of such occupants. Therefore, this type of suppression feature would not be permitted in tests with 5th percentile adult female dummies.

The three manufacturer options proposed in the NPRM were: (1) test requirements for an air bag suppression feature that suppresses the driver air bag when the driver is out of position, (2) test requirements for low risk deployment involving deployment of the air bag in the presence of out-of-position 5th percentile adult female dummies, and (3) full scale dynamic out-of-position test requirements, which include pre-impact braking as part of the test procedure.

For our SNPRM, we have made a number of changes similar to those discussed above with respect to three-year-old and six-year-old children, and for the same reasons. Our proposal for test requirements for low risk deployment involving deployment of the air bag in the presence of out-of-position 5th percentile adult female dummies is largely unchanged, although we have made the same change concerning level of inflation (i.e., levels that could deploy in a rigid barrier crash of up to 29 km/h (18 mph)) for which the test is conducted as discussed above with respect to child dummies. Our proposal for test requirements for an air bag suppression feature that suppresses the driver air bag when the driver is out of position has been replaced with one specifying a procedure by which manufacturers can petition for a test procedure to be added to Standard No. 208. Finally, we have dropped our proposal for full scale dynamic out-of-position test requirements.

While we have carefully considered GM's suggestion that we add out-of-position tests for adult passengers, we have decided not to make such a proposal at this time. Air bag risks to adult passengers are relatively low. Air bags do not pose the same risks for adult passengers as adult drivers and child passengers. Risks are higher for adult drivers because small-statured adults may need to sit relatively close to the air bag in order to drive. However, small-statured adults do not need to sit close to the passenger air bag. Young children are at special risk from air bags because, when unbelted or improperly belted, they are easily propelled against the air bag module during pre-crash braking.

C. Injury Criteria

In the NPRM, we proposed injury criteria and performance limits for each size dummy. We placed in the public docket a technical paper which explained the basis for each of the proposed injury criteria, and for the proposed performance limits.

Standard No. 208 currently specifies five injury criteria for the Hybrid III 50th percentile adult male dummy in barrier crash tests: (1) dummy containment—all portions of the dummy must be contained in the vehicle passenger compartment throughout the test, (2) HIC (Head Injury Criterion) must not exceed 1,000, evaluated over a 36 millisecond (msec) duration (3) chest acceleration must not exceed 60 g's, (4) chest deflection must not exceed 76 mm (3 inches), and (5) upper leg forces must not exceed 10 kilonewtons (kN) (2,250 pounds).

Under the NPRM, these and certain additional injury criteria would generally have been applied to all of the dummies covered by the proposal. However, the criteria would be adjusted to maintain consistency with respect to the injury risks faced by different size occupants.

For some types of injuries, we proposed alternative injury criteria. For chest injury, we proposed two alternatives: a new criterion, Combined Thoracic Index (CTI), which we had recently developed, or separate limits on chest acceleration and chest deflection. We also proposed two alternatives for neck injury criteria: an improved neck injury criterion, called Nij, or separate limits on flexion, extension, tension, compression and shear.

For this SNPRM, we have reviewed all relevant comments on the NPRM as well as comments and documents submitted by biomechanics specialists at NHTSA-sponsored public meetings. Combining this new information with our previous analyses, we are proposing, in a number of instances, modified injury criteria and performance limits.

A general discussion of the proposed injury criteria and performance limits is presented below. A detailed technical explanation is provided in a technical paper which is being placed in the public docket. The title of the paper is: ''Development of Improved Injury Criteria for the Assessment of Advanced Automotive Restraints Systems—II.''

1. Head Injury Criteria

As discussed in the technical report which accompanied the September 1998 NPRM, titled ''Development of Improved Injury Criteria for the Assessment of Advanced Automotive Restraint Systems,'' limits for the head injury criterion (HIC), evaluated over a 36 millisecond time interval, were proposed for the 50th percentile adult male, 5th percentile adult female, 6 year-old child, 3 year-old child and 12-month-old infant dummies.

Due to uncertainties regarding head injuries for children, we had investigated various scaling methods for developing HIC performance limits for the various size test dummies. The HIC limits proposed in the NPRM reflected a methodology that included both geometrical and material property scaling using the properties of the cranial sutures. This method was based on the assumption that the pediatric skull deformation is controlled by properties of the cranial sutures, rather than the skull bones.

Comments received in response to the NPRM and at a public meeting held on April 20, 1999 focused primarily on two issues: (1) the time duration used for the computation of HIC and (2) the scaling of HIC for the child dummies. In general, commenters urged that more conservative values for HIC should be adopted for the child dummies and especially for the 12-month-old CRABI infant dummy. Commenters cited differences in structure between the compliant infant skull with soft cranial sutures and the adult skull in addition to the uncertain tolerances of the infant's brain.

AAMA recommended that the duration for the HIC computations be limited to 15 milliseconds with a limit of 700 for the 50th percentile adult male dummy, which is consistent with Canadian Motor Vehicle Safety Standard No. 208. By way of comparison, Standard No. 208 currently specifies, for that dummy, HIC computed over 36 milliseconds but with a limit of 1000.

The basis for AAMA's recommended 15 millisecond duration was that, in the original biomechanical skull fracture

data from which HIC was derived, no specimen experienced a skull fracture and/or brain damage with a HIC duration greater than 13 milliseconds. AAMA also argued that HIC 36 overestimates the risk of injury for long-duration head impacts with air bags. That organization cited a study where human volunteers who were restrained by air bags experienced HIC 36 greater than 1000 and did not experience brain injury or skull fracture.

We note that NHTSA has previously been asked to limit the HIC duration to 15 or 17 milliseconds. In its earliest form, the HIC was calculated over the whole acceleration-time pulse duration without an imposed limiting time interval. Essentially, HIC values were calculated for all possible time increments starting with one millisecond and ending with the whole duration of the pulse including every time duration increment in between. The maximum value from this entire set was the HIC value used.

On October 17, 1986, we issued a final rule adopting a maximum time interval of 36 milliseconds for calculating HIC. 51 FR 37028. We recognized that available human volunteer tests demonstrated that the probability of injury in long duration events was low, but reasoned that the agency should take a cautious approach and not significantly change the expected pass/fail ratios that the then unlimited HIC provided. Evaluation of a 17 millisecond limit against various test sets from NCAP and FMVSS 208 testing available at the time was found to reduce the failure rate from 46% to 35%. This fact led us to reject a request to reduce the HIC time interval to 15 to 17 milliseconds without a commensurate reduction of the maximum HIC value.

However, to somewhat accommodate to the apparent over-stringency of the limited HIC for long duration events, we did limit the maximum time interval to 36 milliseconds. This allowed the maximum average long duration acceleration to rise to a limit of 60 g's.

Today's proposal for reducing the 36 millisecond HIC time to 15 milliseconds differs from what we previously considered because it is accompanied by a reduction in the maximum allowed value of HIC from 1000 to 700. Based on an analysis of 295 recent NCAP tests, we have determined that the stringency of HIC15/700 and HIC36/1000 appear to be equivalent for long duration pulses. This is because while the HIC 15 produces a lower numerical value for long duration events, its lower failure threshold, 700, compensates for this reduction. This is borne out by the fact that of the 295 NCAP tests examined, 260 passed and 18 failed both criteria, 10 tests that failed HIC 15 passed HIC 36, while 7 tests that failed HIC 36, passed HIC 15. We also note that for pulse durations shorter than approximately 25 milliseconds, the HIC 15=700 requirement is more stringent than the HIC 36=1000 requirement. We believe this increased stringency would provide a desirable added measure of safety for the highly scaled, short duration HIC limits proposed for evaluating those impact events where children and small statured adults are involved. Thus, we are proposing to employ a 15 millisecond time interval whenever calculating the HIC function and limiting the maximum response of the adult male to 700 and limiting the response of the smaller dummies to suitably scaled maximums.

AAMA recommended employing a scaling technique for HIC15 that accounts for the differences in geometry and failure properties between children and adults. Several other researchers have also recommended, using similar techniques and assumptions, scaled performance limits for HIC15. We have also performed additional analysis using finite element modeling to develop yet another approach to scaling HIC. Recognizing that all of these techniques and the scaling relationships they produce are approximate, we have combined these results to develop modified, conservative, scaled HIC performance limits for the various child dummies.

2. Neck Injury Criteria

In the NPRM, we proposed two alternatives: (1) The Nij neck injury criterion, for which we solicited comments on performance limits of Nij=1 and Nij=1.4, and (2) separate limits on neck flexion, extension, tension, compression, and shear. AAMA and others commented that the Nij concept makes biomechanical sense. However, they recommended the use of individual limits for neck forces and moments. Other commenters stated that Nij=1 was more appropriate than Nij=1.4 for affording adequate protection to children. Some commenters suggested even lower limits for neck forces and moments for the child dummies.

After considering the comments, we continue to believe that the superposition of loads and moments performed in the Nij calculation is the most appropriate metric to quantify neck injury risk. Therefore, in the SNPRM, we are proposing Nij as the neck injury criterion. However, in light of the comments, we have made some modifications to the proposed Nij calculations.

We originally developed the Nij criterion using data from matched air bag exposure tests, using anesthetized pigs and the 3-year-old child dummy, conducted by Mertz *et al.* and Prasad *et al.* For the modified Nij, we decided to use certain assumptions made by Mertz (SAE paper No. 973318) in combining the measured tension force and extension moment. Re-analysis of the data after applying these assumptions results in new Nij tension and extension intercept values for the 3-year-old dummy with Nij=1. The resulting Nij=1 threshold limit represents a 22% probability of Abbreviated Injury Scale (AIS) ≥3 neck injury using logistic regression. For this SNPRM, we are also using a scaling procedure recommended by AAMA which takes into account the failure strength of ligaments. The details of the development of the revised Nij neck injury criteria and the revised Nij critical values for all dummy sizes are provided in the technical paper cited above.

As noted above, we requested comments on performance limits of Nij=1 and Nij=1.4. After considering the comments, the available biomechanical data, and testing which indicates that the more conservative value of 1.0 can be met in current production vehicles, we are proposing a limit of 1.0.

3. Thoracic Injury Criteria

For chest injury, we proposed two alternatives in the NPRM: (1) A newly developed injury criterion called the Combined Thoracic Index (CTI), or (2) individual limits on chest acceleration and chest deflection. The CTI is a formula that linearly combines measured chest deflection and acceleration levels into a single value which is then limited to a maximum value. It was derived from our extensive cadaver test data base and was demonstrated to have the best injury predictive capability of all measures examined. The second alternative consisted of individual limits for chest acceleration and deflection, the approach currently used in Standard No. 208. The standard specifies, for the 50th percentile adult male dummy, a 60 g acceleration limit and a 76 mm (3 inch) deflection limit.

Many commenters on the NPRM recommended maintaining individual limits for acceleration and deflection. AAMA recommended that the acceleration limit be maintained at 60 g but suggested that the deflection limit be reduced from 76 mm to 64 mm (3 inches to 2.5 inches). Our analysis indicates that the recommended AAMA

limits, when both at their maximum, would be at a CTI level of approximately 1.2. However, because the CTI would allow greater accelerations with lesser deflection and greater deflection with lesser accelerations at allowable operational points, we believe the AAMA-recommended two independent level criterion would be somewhat more stringent overall. Therefore, we believe the CTI limit proposed in the NPRM and AAMA's recommended individual limits are largely equivalent and that there is a slight safety benefit to adopting the individual limits of 60 g's of acceleration and 64 mm (2.5 inches) of chest deflection for the 50th percentile adult male dummy. For the SNPRM, we are proposing individual limits as recommended by AAMA.

To obtain equivalent performance limits for the other size dummies, i.e., the 5th percentile adult female, 3- and 6-year-old child, and the 12-month-old infant, the mid-size male dummy limits were scaled considering both geometric and material differences.

4. Lower Extremity Injury Criteria

Standard No. 208 currently specifies an axial load limit of 10kN (2250 pounds) for the 50th percentile adult male dummy, as measured by a load cell at the location of the mid-shaft of the femur. The purpose of the axial load limit on the femur is to reduce the probability of fracture of the femur and also surrounding structures in the thigh, such as the patella and pelvis. In the NPRM, we proposed to maintain the current limit of 10 kN (2,250 pounds) for the 50th percentile adult male and proposed a new scaled down limit of 6.8 kN (1,529 pounds) for the 5th percentile adult female to account for the smaller bone size for all proposed test configurations.

There was general support by commenters for including the femoral compressive loads for the 5th percentile adult female dummy specified in the NPRM in addition to maintaining the currently specified value for the 50th percentile adult male dummy. In the SNPRM, we are proposing the same axial femur limits as the NPRM: 10 kN (2,250 pounds) for the 50th percentile adult male and 6.8 kN (1,529 pounds) for the 5th percentile adult female.

AAMA recommended adding femoral compressive load limits for the 6-year-old child dummy. Although we agree with AAMA that femoral compressive load limits for the 6-year-old child dummy are important to consider, the NPRM did not specify such limits because none of the proposed testing configurations imposed substantial loading on the lower extremities. We are therefore not proposing femoral compressive load limits in the SNPRM.

The National Transportation Safety Board (NTSB) recommended that tolerance levels of lower extremities be further investigated and validated. NTSB also suggested that we consider dummies such as an advanced lower extremity dummy for future incorporation into the standards. We are continuing the development of an advanced lower extremity test device, and continue to sponsor experimental impact injury research to determine the mechanisms and tolerances of the lower extremities, including the foot, ankle and leg. When this effort is complete, we will consider incorporating additional injury criteria into our safety standards.

The assessment of lower extremity injury potential in high speed offset deformable crash tests is discussed in a separate section later in this notice.

5. Other Criteria

As we consider adding new injury criteria or modifying existing injury criteria for Standard No. 208, it is logical to consider whether the injury criteria and performance limits we are considering would be appropriate for other safety standards, including Standards No. 201 and 213, particularly if new child dummies were incorporated into Standard No. 213. While we are not proposing to amend those standards in this rulemaking, we request commenters to address whether the injury criteria and performance limits proposed in this SNPRM would be appropriate for those standards, and why or why not.

D. Lead Time and Proposed Effective Date

TEA 21 specifies that the final rule on advanced air bags must become effective in phases as rapidly as practicable beginning not earlier than September 1, 2002, and no sooner than 30 months after the issuance of the final rule, but not later than September 1, 2003. Except as noted below, the phase-in of the required amendments must be completed by September 1, 2005. If the phase-in of the rule does not begin until September 1, 2003, we are authorized to delay the completion of the phase-in until September 1, 2006. As also noted below, other amendments may be phased-in later.

As discussed in the NPRM, we have sought information by a variety of means to help us determine when the vehicle manufacturers can provide advanced air bag systems to consumers. This is known as lead time. Vehicle lead time is a complex issue, especially when it involves technology and designs that are still under development.

In the NPRM, taking account of all available information, including but not limited to the wide variety of available technologies that can be used to improve air bags (and thereby meet the proposed requirements) and information concerning where the different suppliers and vehicle manufacturers were in developing and implementing available technologies, we proposed to phase in the new requirements in accordance with the following implementation schedule:

25 percent of each manufacturer's light vehicles manufactured during the production year beginning September 1, 2002;

40 percent of each manufacturer's light vehicles manufactured during the production year beginning September 1, 2003;

70 percent of each manufacturer's light vehicles manufactured during the production year beginning September 1, 2004;

All vehicles manufactured on or after September 1, 2005.

We proposed a separate alternative to address the special problems faced by limited line manufacturers in complying with phase-ins. We noted that a phase-in generally permits vehicle manufacturers flexibility with respect to which vehicles they choose to initially redesign to comply with new requirements. However, if a manufacturer produces a very limited number of lines, *e.g.*, one or two, a phase-in would not provide such flexibility.

We accordingly proposed to permit manufacturers which produce two or fewer carlines the option of omitting the first year of the phase-in if they achieve full compliance effective September 1, 2003. We proposed to limit this alternative to manufacturers which produce two or fewer carlines in light of the statutory requirement concerning when the phase-in is to begin.

As with previous phase-ins, we proposed to exclude vehicles manufactured in two or more stages and altered vehicles from the phase-in requirements. These vehicles would be subject to the advanced air bag requirements effective September 1, 2005. They would, of course, be subject to Standard No. 208's existing requirements before and throughout the phase-in.

Also as with previous phase-ins, we proposed amendments to 49 CFR Part 585 to establish reporting requirements to accompany the phase-in.

A number of commenters raised issues concerning the proposed phase-in. We will discuss the issues separately for the large vehicle manufacturers and for small manufacturers and multi-stage manufacturers.

1. Large Manufacturers

Honda stated that it would be virtually impossible to comply with the proposed phase-in. It cited the number of tests, the need for new testing facilities and personnel, and the lack of completed dummies. That company stated that assuming the final rule was reasonable and practical, it needs at least three years leadtime after the final rule and before the start of the phase-in, and a five-year phase-in. Volvo also stated that it needs three years after the final rule.

We note that, for this particular rulemaking, we have limited discretion as to how much lead time we can provide. Under the statutory requirements discussed earlier in this section, assuming that the final rule is issued on March 1, 2000, it must become effective in phases beginning not earlier than September 1, 2002 (which is 30 months after March 1, 2000) and not later than September 1, 2003. Moreover, there is a limit as to how long the phase-in may be. If the phase-in begins on September 1, 2002, the required amendments must be fully effective by September 1, 2005. Only if the phase-in begins on September 1, 2003 may the agency delay making the required amendments fully effective until September 1, 2006.

Under the statute, the agency is therefore precluded from providing the five-year phase-in requested by Honda. Whether the phase-in begins on September 1, 2002 or September 1, 2003, the required amendments must be fully effective not more than three years later.

For this SNPRM, we are proposing the same phase-in for large manufacturers as in the NPRM. The proposed date for the start of the phase-in, September 1, 2002, would be 30 months after a final rule that was issued on March 1, 2000. This proposed date reflects the seriousness of the safety problem being addressed and the statutory requirement that the final rule become effective as rapidly as possible. Honda and Volvo did not demonstrate that this date cannot be met. We note that, as discussed earlier, several manufacturers will be introducing air bags with many of the features needed to comply with the proposed requirements for advanced air bags during MY 2000.

Comments are requested on phase-in schedules and percentages other than the 25%–40%–70%–100% schedule proposed in this document. One example is a 40%–70%–100% schedule beginning one year later than the proposed schedule, but ending at the same time. This alternative is like the proposed one, except that the first year of the proposed phase-in is eliminated. This alternative schedule would offer additional leadtime at the beginning of the phase-in, while not compromising the final effective date for all new vehicles. With the availability of credits for early compliance, a manufacturer also would have additional time to develop and produce early-complying vehicles to meet the initial phase-in percentages.

We recognize that simultaneous implementation of these various proposals will necessitate considerable care and effort by the vehicle manufacturers. In a normal rulemaking, we would have broad discretion to adjust the implementation schedule to facilitate compliance. In this rulemaking, our discretion to set the schedule for implementing the amendments required by TEA 21 is limited by that Act. As indicated above, our final rule must not provide that the phasing-in of those amendments begins any later than September 1, 2003, or ends any later than September 1, 2006.

However, above and beyond our discretion to adjust the amendments for reasons of practicability, we also have some discretion to make temporary adjustments in them if, in our judgment, such adjustments are necessary or prudent to promote the smooth and effective implementation of the goals of TEA 21 through the introduction of advanced air bags. As discussed above, the final rule could temporarily reduce the injury criteria or test speeds during the TEA 21 phase-in and then terminate those reductions at the end or after the end of that phase-in.

2. Small Manufacturers and Multi-Stage Manufacturers

The Coalition of Small Volume Automobile Manufacturers (COSVAM) stated that the extra year of leadtime we proposed for small volume manufacturers is insufficient to meet its members' needs. That organization requested that small volume manufacturers be treated the same as final stage manufacturers, i.e., not be required to meet the new requirements for advanced air bags until the end of the phase-in.

COSVAM stated that small volume manufacturers need until the end of the phase-in because they cannot obtain new technology at the same time it is made available to large manufacturers, because they have difficulty getting suppliers to sell to them at all, and because some small volume manufacturers source from large manufacturers and may source parts from a model which will not comply until the end of the phase-in. AIAM stated that the law does not allow a reasonable timetable for phase-in even for large volume manufacturers, which will be given access to technology first, and that there is certainly no evidence that small volume manufacturers have the ability to comply in the second year of the phase-in.

After considering the comments, we have decided to propose that small volume manufacturers be permitted to wait until the end of the phase-in to meet the new requirements. We note that we are proposing to treat small volume manufacturers differently than in previous rulemakings involving phase-ins because of two factors.

The first factor is the complexity of the new requirements. Even the more streamlined set of requirements proposed in this SNPRM will require significant design changes and significant new testing for all cars and light trucks. The second factor is the relatively short leadtime before the phase-in is scheduled to begin.

The proposed special treatment of small volume manufacturers would be in addition to our proposal to permit limited line manufacturers to wait until the second year of the phase-in to begin compliance if they then meet the new requirements for all of their vehicles.

Because our new proposal for small volume manufacturers will have the effect of permitting them to avoid the phase-in entirely, it is critical to establish eligibility criteria that are as narrow as possible. Accordingly, we are proposing to limit this phase-in option to manufacturers which produce fewer than 5,000 vehicles per year worldwide.

We specifically request comments on this proposed limitation. We note that COSVAM indicated that all of its members produce fewer than 5,000 vehicles per year worldwide. However, that organization requested that we make this phase-in option available to all manufacturers which produce fewer than 10,000 vehicles per year worldwide. COSVAM did not explain why it believes the limitation should be set at this level.

Several commenters, including the National Truck Equipment Association (NTEA) and the Recreation Vehicle Industry Association (RVIA), requested that multi-stage manufacturers and alterers be given a one-year extension after the end of the phase-in for large manufacturers. NTEA stated that given

the level of research and testing likely to be required by the final rule, chassis manufacturers will be hard pressed to complete work on time for their standard lineup of vehicles let alone those chassis to be used by multi-stage industry. That organization stated that an extra year would give chassis manufacturers more time to generate compliance information needed for commercial vehicles produced in two or more stages.

RVIA stated that guidance from incomplete vehicle manufacturers is generally not available until at or very near the startup of new or updated model production and that, therefore, final stage manufacturers will need at least one additional year to meet the new requirements.

While we have carefully considered the comments, we are not proposing an additional extension for final stage manufacturers, beyond the end of the phase-in. We note that, as discussed above, we have limited discretion as to how much leadtime we can provide. Under TEA 21, if the phase-in begins on September 1, 2002, the final rule must become fully effective by September 1, 2005. There are no exceptions for multi-stage manufacturers.

Moreover, we believe this is an issue which can be handled by the industry. Final stage manufacturers are used to completing vehicles within limitations identified by chassis manufacturers so that they can certify their vehicles with limited or no additional testing. We do believe it is important that the chassis manufacturers communicate with their final stage manufacturer customers as soon as possible concerning any new limitations that may be made as a result of the advanced air bag requirements. The chassis manufacturers should be able to identify the type and likely scope of any such new limitations well before the end of the phase-in. Even now, the chassis manufacturers should be able to identify the types of new limitations that are likely, given the proposed requirements and planned design changes. We would encourage chassis manufacturers and final stage manufacturers to begin discussions on these issues now.

Atwood, a supplier of seating components, asked whether a generic type test could be developed to eliminate testing the entire family of test dummies. That company stated that it runs sled tests consisting of baseline tests of OE components and additional tests of its components. We do not believe it would be possible to develop a generic type test, for purposes of Standard No. 208, that could eliminate tests incorporating the family of dummies. Different size human beings respond differently in crashes, and it is therefore necessary to use different size dummies to test for the injury risks posed to occupants of varying sizes. Also, if a weight/pattern sensor in a seat is designed to suppress air bags for children and not for adults, it is necessary to test them both for children and adults.

E. Availability of Original Equipment and Retrofit Manual On-Off Switches

As discussed in the NPRM, Standard No. 208 currently includes a temporary provision permitting manufacturers to provide manual on-off switches for air bags in vehicles without rear seats or with rear seats too small to accommodate a RFCSS. This provision is scheduled to expire on September 1, 2000. However, in the NPRM, we proposed to extend this provision so that it phases out as the new requirements for advanced air bags are phased in. During the phase-in, OE manual on-off switches would not be available for vehicles certified to the upgraded requirements, but would be available for other vehicles under the same conditions as they are currently available.

Also as discussed in the NPRM, on November 11, 1997, we published in the **Federal Register** (62 FR 62406) a final rule exempting, under certain conditions, motor vehicle dealers and repair businesses from the ''make inoperative'' prohibition in 49 U.S.C. 30122 by allowing them to install retrofit manual on-off switches for air bags in vehicles owned by people whose request for a switch is authorized by NHTSA. The final rule is set forth as Part 595, *Retrofit On-Off Switches for Air Bags.*

The purpose of the exemption was to preserve the benefits of air bags while reducing the risk of serious or fatal injury that current air bags pose to identifiable groups of people. In issuing that final rule, we explained that although vehicle manufacturers are beginning to replace current air bags with new air bags having some advanced attributes, i.e., attributes that will automatically minimize or avoid the risks created by current air bags, an interim solution was needed for those groups of people at risk from current air bags in existing vehicles.

In the NPRM, we proposed to phase out the availability of this exemption in the same manner as the temporary provision permitting manufacturers to provide manual on-off switches for air bags in vehicles without rear seats or with rear seats too small to accommodate a RFCSS. Under the proposal, retrofit on-off switches would not be available for vehicles certified to the new advanced air bag requirements.

We requested comments, however, on whether retrofit on-off switches should continue to be available under eligibility criteria revised to be appropriately reflective of the capabilities of advanced air bag technology. We observed that if such switches were to be available at all, the criteria would need to be much narrower since the risks would be smaller than they are currently. For example, the passenger air bag in a vehicle with a weight sensor would not deploy at all in the presence of young children. Therefore, there would be no safety reason to permit a retrofit on-off switch because of a need for a young child to ride in the front seat.

Only a few commenters addressed the issue of OE and retrofit on-off switches. Two basic positions were given: either allow on-off switches regardless of the existence of advanced air bag technology, or phase-out the switches as proposed in the NPRM. The central issue to each position is whether the advanced air bag systems will be sufficiently reliable to obviate the need for a manual switch.

While we believe that reliable systems can be developed in a timely manner, thus removing the need for an on-off switch, we are concerned that those individuals who are currently at risk from air bags may lack confidence in the new systems, particularly when they are first introduced. However, we believe this problem will diminish during the course of the phase-in, as consumers hear about, and become familiar with, advanced air bags.

Accordingly, in this SNPRM, we are proposing to allow both OE switches and retrofit switches to be installed under the same conditions that currently govern such installation in all vehicles produced prior to September 1, 2005, the date by which all vehicles must have an advanced air bag system. We believe that by that time consumer confidence in the advanced systems will be sufficiently strong to remove any desire for a manual switch in vehicles produced with an advanced air bag.

F. Warning Labels and Consumer Information

As discussed in the NPRM, on November 27, 1996, we published in the **Federal Register** (61 FR 60206) a final rule which, among other things, amended Standard No. 208 to require improved labeling on new vehicles to better ensure that drivers and other occupants are aware of the dangers posed by passenger air bags to children. These warning label requirements did

not apply to vehicles with passenger air bags meeting specified criteria.

In the NPRM, we similarly proposed that vehicles certified to the new advanced air bag requirements would not be subject to those warning label requirements. We requested comments, however, concerning whether any of the existing labeling requirements should be retained for vehicles with advanced air bags and/or whether any other labeling requirements should be applied to these vehicles.

Thirteen commenters addressed the issue of retaining the existing air bag warning labels, including manufacturers, manufacturer associations, and consumer groups. At least until the reliability of newer air bag designs are proven by experience, all of the commenters supported the retention of a warning regarding the importance of children in rear seats. Most supported the inclusion of a seat belt use warning. Some commenters also addressed the issue of requiring manufacturers to provide information about which vehicles meet the new requirements. Consumer groups strongly supported such a requirement, while manufacturers and some others believed such a requirement was not necessary since the information would be provided voluntarily.

Given the importance of the safety information at issue and in light of the widespread support for continued labeling, NHTSA is proposing a replacement for the permanent sun visor label for vehicles that meet the requirements of this proposed rule. The label would contain statements regarding belt use and seating children in the rear seat. These statements are good general advice; however, NHTSA requests comments on any currently known risks which would require more specific statements.

The word ''CAUTION'' would be substituted for the word ''WARNING'' in the heading of the label. According to ANSI Z535.2, ''WARNING indicates a potentially hazardous situation which, if not avoided, could result in death or serious injury.'' ''CAUTION indicates a potentially hazardous situation which, if not avoided, may result in minor or moderate injury. It may also be used to alert against unsafe practices.'' Since there are currently no known specific risks associated with advanced air bags, ''Caution'' appears to be more appropriate as an alert against unsafe practices.

We believe that the existing graphic is inappropriate for air bags meeting these requirements, as this risk is specifically tested for in the new requirements. Therefore, a new graphic has been developed which shows a cut-away side view of a vehicle with a belted driver and a child in a child seat in the rear.

In addition, we are proposing a new temporary label that states that the vehicle meets the new requirements for advanced air bags. This label would replace the existing temporary label and include statements regarding seat belt use and children in rear seats. We request comment on how and where additional information regarding how the vehicle complies and other information about the new air bags should be made available. The options under consideration include requiring the information on the temporary label, in the owners manual, or in a separate required informational brochure.

We are proposing to retain all other existing label requirements regarding location, size, etc. for the new labels. Also, as with the current labels, manufacturers may provide translations of the required English language message as long as all the requirements for the English label are met, including size.[25]

Consistent with our proposal to require labels for vehicles with advanced air bags, we are proposing to drop the current definition of ''smart passenger air bags'' contained in S4.5.5 and the existing option to remove warning labels in vehicles with air bags that meet that definition (S4.5.1). The term ''smart air bag'' is simply an older term for advanced air bag. For the reasons discussed above, we believe that some warning label is needed for vehicles with advanced air bags. We also note that no manufacturer has taken advantage of the existing compliance option, and we believe that they will not do so in the future. Manufacturers have urged us to develop a single warning label that would apply to vehicles with advanced air bags. Thus, even if they do develop a system that meets the existing definition of smart passenger air bags, we do not think they would decide to produce vehicles without warning labels.

In order to provide consumers with adequate information about their occupant restraint system, a manufacturer would also need to provide a written discussion of the vehicle's advanced passenger air bag system. This discussion would probably be included in the vehicle owner's manual, although we are interested in knowing whether it would be desirable to have this information located elsewhere. The discussion would need to explain the proper functioning of the advanced passenger air bag system and provide a summary of the actions that may affect the proper functioning of the system.

We anticipate that several topics would need to be addressed. The information provided might need to include discussions of the following topics, as appropriate:

- A presentation and explanation of the main components of the advanced passenger air bag system.
- An explanation of how the components function together as part of the advanced passenger air bag system.
- The basic requirements for proper operation, including an explanation of the occupant actions that may affect the proper functioning of the system.
- A complete description of any passenger air bag suppression system installed in the vehicle including a discussion of the suppression zone and a discussion of the telltale light on the instrument panel, explaining that the light is only illuminated when the advanced passenger air bag system is suppressed, is not illuminated when the advanced passenger air bag system is activated, and informing the vehicle owner of the method used to indicate that the air bag suppression system is not operating properly.
- An explanation of the interaction of the advanced passenger air bag system with other vehicle components, such as seat belts, seats or other components.
- A summary of the expected outcomes when child restraint systems, children and small teenagers or adults are both properly and improperly positioned in the vehicle, including cautionary advice against improper placement of child restraint systems.
- Tips and guidelines to improve consumer understanding of the proper use of the advanced passenger air bag system.
- Information on how to contact the vehicle manufacturer concerning modifications for persons with disabilities that may affect the advanced air bag system.

G. Miscellaneous Issues

1. Selection of Child Restraints

As discussed earlier in this notice, in order to reduce testing costs, we are proposing to require manufacturers to assure compliance with tests to minimize the risks from air bags to infants and young children using any child restraint on a specified list of representative child restraints. In developing the proposed list of representative child restraints, we attempted to select seats that are

[25] For further information about our policies in this area, see 59 FR 11200, 11201–202, March 10, 1994.

produced by various manufacturers while limiting the overall number of restraints. The list was derived from a much more comprehensive list of restraints to be purchased by NHTSA's Office of Vehicle Safety Compliance for use in the agency's FY 2000 compliance test program.

We believe the more comprehensive list represents the majority of child restraints currently on the market. That list was reduced, in part, by eliminating similar restraint systems, *e.g.*, restraints that are sold as different models but which we believe provide the same footprint. For example, a particular restraint may come with both a T-shield and a five-point harness system. We do not believe it would be necessary to test a suppression system using both restraints, since the difference between the two models is the type of system used to restrain the child and not the basic design of the seat. We further shortened the comprehensive list by eliminating restraints produced by a manufacturer who was already represented at least once within the particular class of child restraints. Other restraints, like the car bed, are the only one of their type and were placed on the list for that reason.

We have tentatively decided to add the list of child restraints as an appendix to the proposed regulatory text. However, we plan to propose updating the list from time to time (with appropriate lead time). Of particular concern is the introduction of child restraints that will be developed to comply with the agency's recently issued rule on uniform child restraint anchorages.

2. Due Care Provision

Since March 1986, Standard No. 208 has included as part of its various crash test requirements a provision stating that ''a vehicle shall not be deemed to be in noncompliance with this standard if its manufacturer establishes that it did not have reason to know in the exercise of due care that such vehicle is not in conformity with the requirement of this standard.'' In adding this provision, the agency cited the complexity of the Standard No. 208 test and stated that, because of this complexity, it believed that manufacturers needed assurance from the agency that, if they have made a good faith effort in designing their vehicles and have instituted adequate quality control measures, they will not face the recall of their vehicles because of an isolated apparent failure to meet one of the injury criteria.

In the September 1998 NPRM, we did not propose to extend the ''due care provision'' to the various new proposed test requirements. Vehicle manufacturers commented that there may be greater variability associated with the new proposed test requirements than the old ones and that the ''due care provision'' is needed more than ever.

In addressing this issue, we note that the ''due care provision'' is unique to Standard No. 208. The provision was initially adopted as part of the 1984 rulemaking requiring automatic protection, and was then extended as the various crash test requirements were extended. We did not, however, adopt a ''due care provision'' for the subsequent crash or other dynamic tests in other standards, such as Standards No. 201 or 214.

As a general matter, we disfavor including a ''due care provision'' in the Federal motor vehicle safety standards. There are several reasons for this.

First, the inclusion of such a provision in a safety standard does not fit very well with the overall statutory scheme. Safety standards are required to be objective. To the extent the question of whether a manufacturer exercised due care becomes a compliance issue, a measure of subjectivity is introduced into the standard. Also, the Safety Act itself includes a different ''due care provision.'' While the statutory due care defense can relieve a manufacturer of paying civil penalties for failure to comply with a safety standard, it does not relieve the manufacturer of recalling non-complying vehicles.

Second, we do not believe there is an intrinsic need for a ''due care provision.'' Nothing in the history of Standard No. 208 compliance activities since 1984 indicates there is a need for such a provision. We also note, with respect to enforcement, that we have consistently taken the position that we will not require a manufacturer to recall large numbers of vehicles merely because of an isolated test failure, where there is evidence that other tested units have met the standard's performance requirements and there is no indication of the absence of adequate quality control procedures.

Notwithstanding the fact that we generally disfavor including a ''due care provision'' in a safety standard, we also recognize that Standard No. 208 has included such a provision as part of its crash test requirements for the past 13 years. Recognizing that this rulemaking for advanced air bags will require manufacturers to certify their vehicles to a significantly greater number of test requirements in a limited amount of time, we do not believe that now is an appropriate time to delete this provision.

Accordingly, for this SNPRM, we are proposing to maintain the same ''due care provision'' for the new crash test requirements as for the existing ones. However, we are not proposing to apply the provision to test requirements that do not involve crashes, as these tests are not affected by the variability associated with dynamically induced dummy movement and/or vehicle deformation.

3. Selection of Options

In the NPRM, we proposed to require that where manufacturer options are specified, the manufacturer must select the option by the time it certifies the vehicle and may not thereafter select a different option for the vehicle. This would mean that failure to comply with the selected option would constitute a noncompliance with the standard (as well as a violation of the certification requirement), regardless of whether a vehicle complies with another option. We noted situations in the past where vehicle manufacturers have advised us that they had selected one compliance option, but then sought to change the option after being confronted with an apparent test failure.

Vehicle manufacturers objected to this proposed requirement. AAMA stated that the proposed requirement would not meet the need for motor vehicle safety, since both options meet the need for motor vehicle safety.

For this SNPRM, we are not changing this part of our proposal, except to add a provision clarifying that upon request, manufacturers will be required to advise the Office of Vehicle Safety Compliance (OVSC) of particular compliance options selected for a given vehicle or vehicle model. We note that this issue has arisen in the context of several recent and ongoing rulemakings, and we are continuing to review the various comments and other submissions from manufacturers concerning this issue.

4. Relationship of the Proposed New Injury Criteria to Existing Test Requirements

In this SNPRM, we are proposing a number of new and/or modified injury criteria and performance limits for vehicles certified to the requirements for advanced air bags. Some of these injury criteria and performance limits would apply to new tests, and some would apply to existing tests that are being retained in Standard No. 208.

We are not proposing to change the injury criteria for vehicles not certified to the requirements for advanced air bags. As a general matter, vehicles produced between the time the final rule becomes effective and the time the phase-in is complete will be required to

comply with and be certified to the current requirements and current injury criteria or to the requirements for advanced air bags and new injury criteria; there will be no opportunity to mix and match.

We believe it would be unnecessary and potentially counterproductive to apply the new injury criteria or performance limits to vehicles produced in the next several years which are not certified to all of the requirements for advanced air bags. It is our intention that the vehicle manufacturers focus their attention on designing vehicles that comply with the new requirements for advanced air bags, consistent with the phase-in period, rather than attempting in the short term to modify and/or recertify existing vehicles to meet new injury criteria.

We also do not believe it would be a good use of our resources to conduct the analyses that would be needed to reevaluate what injury criteria and limits should apply to what test requirements for vehicles not yet redesigned to meet the requirements for advanced air bags. We note that injury criteria cannot be viewed in isolation. They apply both in the context of individual tests and in the context of arrays of tests. If the tests are more (or less) severe, the appropriate criteria may be less (or more) severe. There may be no direct relationship between the two.

As a possible exception to requiring vehicles produced between the time the final rule becomes effective and the time the phase-in is complete to comply with and be certified to the current requirements and current injury criteria or to the requirements for advanced air bags and new injury criteria, we request comments on whether we should permit manufacturers to immediately certify their vehicles to whatever set of unbelted crash test requirements applicable to 50th percentile adult male dummies is adopted for the final rule, as an alternative to the currently available sled test or unbelted up-to-48 km/h (30 mph) rigid barrier test. As discussed earlier in this document, we believe the sled test has significant limitations as compared to a crash test. Therefore, to the extent vehicle manufacturers wished to immediately design and certify vehicles to whatever set of unbelted crash test requirements is included in the final rule, there could be safety benefits.

5. Time Parameters for Measuring Injury Criteria During Tests

We have decided to propose specific end points for measuring injury criteria in both crash tests and low-risk deployment tests in order to resolve any uncertainty on the part of vehicle manufacturers and NHTSA as to when the measured injury criteria are relevant.

In dynamic crash tests, we historically have not measured injury criteria more than 300 milliseconds after the vehicle impacts the barrier. In our experience, additional measurement is unnecessary. Accordingly, we are proposing a 300 millisecond time duration for the dynamic crash tests.

The low risk deployment tests, which do not involve a complete vehicle crash and are intended only to address the potential adverse effects of an air bag, would not require as long a period of time to measure potential injuries. Accordingly, we are proposing injury measurements up to 100 milliseconds after the air bag deploys.

Regardless of the time frame used to measure other injury criteria, all dummies would continue to be required to remain fully contained within the test vehicle until physically removed by a technician.

6. Cruise Controls

In the NPRM, we asked about possible requirements for turning the cruise controls off when the air bag deploys. We were concerned that the cruise control, if not deactivated, would continue to provide power to the vehicle. This could lead to a runaway condition. Responding auto manufacturers (DaimlerChrysler, General Motors, Ford, Isuzu and the AIAM) saw no justification in turning off the cruise controls when the air bag deploys. Several commenters (JCW Consulting and Parents for Safer Air Bags) supported a requirement for deactivating cruise controls during a crash.

We are concerned that cruise controls could create a safety problem if they continue to operate after air bag deployment. No manufacturer provided information that its vehicles would not continue to operate on cruise control after a crash for which the air bags deployed. Nor did any indicate that it would be impracticable, or even difficult, to implement an automatic air bag shut-off system. Accordingly, we have decided to propose that cruise controls be deactivated when any stage of an air bag system is deployed. We have included a brief procedure to test whether this requirement is met.

7. Rescue Operations

In the NPRM, we also raised the possibility of adding requirements to prevent air bag deployments during rescue operations following a crash. We are aware of scattered reports of air bag deployments that take place after rescue personnel or ''first responders'' begin rescue operations. Many of the responding auto manufacturers (DaimlerChrysler, General Motors, Ford, VW, Toyota and AIAM) saw no justification in going forward with rescue provisions, believing that deactivation time requirements may limit design freedom. However, General Motors pointed out that rescue personnel frequently work under conditions so adverse as to preclude easy ''look-up'' of the information they need to know about deactivation times for a given model and MY of vehicle in any published rescue guideline. The National Transportation Safety Board stated that some universal method of deactivation should be incorporated into air bags to neutralize any potential danger for rescuers.

We believe that a standardized air bag deactivation time would eliminate confusion and unnecessary delays during rescue work. As stated in our recent publication titled ''Rescue Procedures for Air Bag-equipped Vehicles,'' the air bags in most vehicles are deactivated within a minute or less after battery power is disconnected. We believe that deactivation times are generally decreasing and that a one minute ''keep alive'' period is adequate for deployment requirements. Accordingly, we are proposing to require that all air bags become deactivated after a maximum one-minute ''keep alive'' period has elapsed after the vehicle battery power is disconnected. Again, we have included a brief procedure to test whether this requirement is met.

8. Assessing Lower Extremity Injury Potential in Offset Deformable Crash Tests

In the discussion about possible adoption of a 48 to 56 km/h (30 to 35 mph) unbelted offset deformable barrier crash test, we note that the test would have greater potential to produce benefits related to injury from intrusion. This would include addressing injuries sustained by lower extremities, such as ankle/foot, tibia, knees, femurs, and the pelvis bone. This type of injury can result in life-long disability.

Crash data indicate a higher prevalence of lower extremity injuries in offset frontal collisions than in fully distributed frontal impacts. Lower extremity injuries occur at higher frequency at lower offset collision speeds than at comparable distributed collisions, particularly if floor pan intrusion is involved. Analysis of hospital data involving 42 front seat occupants who sustained below-the-

knee lower limb injuries in frontal crashes showed that the foot ankle-complex accounted for nearly two thirds of all lower extremity trauma. This study indicated that direct foot contact with vehicle interior was the major injury mechanism (approximately 70%) while inversion-eversion and dorsiflexion made up the rest of the trauma. Since lower extremity injuries occur frequently, are disabling, and involve large medical costs, vehicle modifications to create a more crashworthy environment for the lower extremities would be an effective means to reduce the incidence and severity of these injuries.

To assess the likelihood of lower limb injuries in an offset deformable barrier crash test, it would be necessary to modify the existing and proposed Part 572 dummies to add instrumentation to the lower limbs. Currently, none of the Part 572 dummies incorporate instrumentation for measured assessment of potential tibia and ankle-foot injuries. However, two instrumented lower limb designs are available for installation on Hybrid III dummies. Denton, Inc. has been selling since the mid-1980's an instrumented tibia for the 50th percentile adult male dummy to assess tibia injury potential primarily due to axial loading. This tibia is a direct replacement for the regular Part 572 Subpart E non-instrumented tibia. The other design, still at the experimental-prototype stage is the THOR–LX being developed under our direction by General Engineering Systems Analysis Company (GESAC) and Applied Safety Technologies Corporation (ASTC). The THOR–LX includes tibia and an ankle foot complex with extensive instrumentation.

In October 1998, Denton, Inc., announced commercial availability of a 12 channel instrumented tibia for the 5th percentile adult female Hybrid III dummy which can also be used as a direct replacement for the proposed Subpart O dummy's tibia. The Denton-design tibias are covered by Denton patents and to the best of our knowledge Denton is its sole manufacturer and supplier. While the automotive manufacturers have used the Denton tibia for the assessment of injuries based on the tibia index, some researchers have criticized this design for its unusual geometry, which could induce measurement errors. As a result, the tibia index has been considered to be a questionable injury assessment parameter. See ESU paper 98–37–0–11, SAE paper 962424 and SAE paper 973301. We have performed limited evaluation of the 50th percentile adult male Denton tibia and found no significant problems in its use for tibia index measurement at the laboratory level, but have little experience in its application on dummies in vehicle crash tests.

Inasmuch as the 5th percentile adult female instrumented Denton tibia has been commercially available for less than a year, we have neither laboratory nor vehicle experience to determine its utility and practicality when used as part of the Subpart O dummy for lower limb injury assessment purposes.

The prototype THOR–LX for the 50th percentile adult male Hybrid III dummy has extensive biomechanical benchmarking incorporating a number of humanlike features, and is capable of assessing the potential of tibia, ankle and foot injuries with an extensive array of sensors. The THOR–LX has had limited application in sled tests and vehicle crash tests both at NHTSA and at several vehicle manufacturers.

Completion of certification of prototype THOR–LX is currently expected by November 1, 1999. Extensive subsequent tests will be required to establish the repeatability and reproducibility of its commercial version in laboratory and vehicle tests, the consistency and utility of the measurements relative to the injury assessment potential and its merits in comparison to the Denton design.

The design of THOR–LX for the 5th percentile adult female dummy is still to be completed, prototypes built, and evaluated. Earliest estimated availability of THOR–LX prototypes for the 5th percentile adult female Hybrid III dummy is in late spring of 2000. Inasmuch as the design of the THOR–LX has been sponsored by the government, its availability for manufacturing will be free of any restrictions.

Injury assessment reference values (IARVs) for the Denton type design have been established and published in several technical documents. The IARVs, as published in proceedings of the Advisory Group for Aerospace Research and Development (AGARD), specify for the 5th percentile adult female dummy's tibia an axial compression limit of 5104 N (1,147 pounds), and a Tibia Index of 1 for which the critical bending moment is 115 N-m (1,018 lbfin.) and critical compression force at 22.9 kN (5,148 pounds).

IARVs for the THOR–LX are still to be developed. There is a considerable amount of biomechanics literature to provide a basis for setting of appropriate IARVs, but their interpretation for and applicability to the THOR–LX for injury assessment purposes is still to be done.

As indicated above, a potential significant advantage to adopting a 48 to 56 km/h (30 to 35 mph) unbelted offset deformable barrier crash test would be the benefits associated with reducing the number and severity of lower limb injuries. Recognizing the possibility of adopting this test, we request comments on how we should proceed in upgrading the 5th percentile adult female and 50th percentile adult male dummies so that they are capable of measuring lower limb injury potential, and in selecting/developing appropriate injury criteria.

9. Hybrid III Dummy Neck

There have been crash test situations where the agency has observed high neck moments being generated at the upper load cell of the Hybrid III dummy within 20 milliseconds of the initiation of large neck shear loads without observing substantial angular deformation of the dummy neck. While we believe that these are true loads being generated by the restraint system and not artifacts of an inappropriately designed neck transducer, we are uncertain whether this loading condition is biomechanically realistic. That is, the current Hybrid III neck exhibits considerable bending resistance (i.e., inflexibility) at its occipital condyle joint. The inflexibility may allow large moments to be transmitted to the neck by the head without much relative motion. This, in turn, can create a situation in which the angular deflection due to the applied moment is opposed and even sometimes nullified by the superimposed angular deflection induced by the neck's shear force. Thus, high moments can be produced with little observable rotational deformation of the neck. In contrast to this, the human occipital condyle joint appears to have considerable laxity which requires it to experience significant rotation (± 20 degrees of the head with respect to C1) before it can sustain a substantial moment across it. This would suggest that rapid, high moments generated on a dummy without any concomitant head/neck rotation are possibly an artifact of Hybrid III's neck design and not necessarily a real load that contribute to the potential for neck injury.

We seek comment on whether anyone else using the Hybrid III dummy has experienced this rapidly produced high moment/low angular deflection condition, whether they agree or disagree with our analysis of the mechanics and possible consequences of the situation, and whether they have any biomechanical data supporting either maintaining the current neck design or justifying its modification.

We note that it would not be possible to modify in any significant way the current neck design within the time frame of this rulemaking, *i.e.*, before the March 1, 2000 deadline for a final rule. Moreover, we believe that dummies with the current neck are adequate for measuring risk of neck injury in the proposed tests. To the extent that commenters advocate modifying the neck, we ask them to address how dummies with the current neck should be used in the final rule to measure risk of neck injury.

There is another technical issue related to the Hybrid III dummy neck for which we are seeking public comment. On the selection of data channel, SAE J 211, paragraph 5, states ''that selection of frequency response class is dependent upon many considerations, some of which may be unique to a particular test.'' Further, SAE J211 notes that ''(t)he channel class recommendations for a particular application should not be considered to imply that all the frequencies passed by that channel are significant for the application.'' In the case of head-to-air bag interaction, the agency observed that the specified channel frequency class (CFC) for the neck at 1,000 for force and 600 for the bending moment admits neck data that has spikes of very short duration that may not be appropriate for evaluating the potential for neck injury to the human. Preliminary evidence indicates that the human neck response under similar impact would respond with considerably lower frequency response class data, which implies that the neck response data when processed for injury assessment should be filtered to a lower CFC level than suggested by SAE J211. Accordingly, the agency seeks comments on an appropriate CFC for evaluating data from neck load cells for injury assessment purposes and whether that CFC should depend on the impact environment (e.g., vehicle crash tests, out-of-position tests, etc.)

H. Relationship Between the NPRM, Comments on the NPRM and This SNPRM

In developing this SNPRM, we have carefully considered all of the comments received in response to the NPRM. Moreover, as discussed throughout this document, we have made many changes in our proposal in response to the public comments.

Because our SNPRM differs significantly in many aspects from the NPRM, we do not contemplate any further consideration of the comments on the NPRM in developing the final rule. If any persons believe that we did not adequately consider particular issues raised in comments on the NPRM, they should raise those issues again in commenting on the SNPRM. Moreover, they should not merely cite the old comments, but should explain why they believe the issues remain valid in the context of the SNPRM.

IV. Costs and Benefits

We are placing in the docket a revised Preliminary Economic Assessment (PEA) to accompany this SNPRM. The PEA analyzes the potential impact of the proposed performance requirements and associated test procedures for advanced air bag systems. A summary of the PEA follows. We request comments on the analyses and estimates of costs and benefits presented in that document.

Benefits

The assessment provides analyses of the safety benefits from tests that reduce the risk of injury from air bags in low-speed crashes, as well as from tests that improve the overall effectiveness of air bags in high speed crashes. For out-of-position occupants that are at risk of being injured by air bags, the agency estimates that out of 45 at-risk drivers that would have been killed with pre-MY 1998 air bags, 21 to 39 would be saved with low-risk air bags for the driver side. The agency also estimates that out of 136 passengers that would have been killed with pre-MY 1998 air bags, 91 would be saved with weight sensors and 122 to 132 would be saved with low-risk air bags. Of an estimated 37 drivers that would have an MAIS 3–5 injury, 20 to 33 could be prevented by low-risk deployment air bags. Of an estimated 218 passengers that would receive MAIS 3–5 injuries, about 149 could be prevented by a weight sensor and 168 to 202 could be prevented with a low-risk deployment air bag.

The PEA also contains estimates of the benefits of incremental improvements in safety compared to a baseline of pre-MY 1998 air bag vehicles for each compliance scenario. These are calculated by taking the available test data (based on vehicles designed to the 48 kmph (30 mph) unbelted test) and determining the benefits of bringing those test scores that are above the proposed injury criteria performance levels down to the level of the proposal in this SNPRM. This methodology assumes that manufacturers would make as few changes as possible to their fleet to meet the new proposals. Thus, it does not assume that manufacturers might completely redesign their air bag fleet if the final rule had a test for the high speed unbelted test other than the 48 kmph (30 mph) rigid barrier test. This analysis found that improved safety from vehicles passing the high speed Alternative 1 proposals would save 70 to 226 [26] lives and prevent 342 to 691 MAIS 2–5 injuries. Combining the at-risk benefits and the high speed Alternative 1 benefits results in a range of benefits of 161 to 226 lives saved and 491 to 691 non-fatal MAIS 2–5 injuries prevented.

A similar analysis was prepared for Alternative 2, however, there are such limited data available that the impact is uncertain. To the best of our knowledge, no vehicles have been designed to a 35–56 kmph (22–35 mph) offset deformable barrier test. The analysis for Alternative 2 uses test results from vehicles designed to meet a 30 mph unbelted rigid barrier test. It is questionable whether this gives appropriate results for the future benefits of such a test.

Another set of analyses compares the data available on redesigned MY 1998/99 air bags compared to pre-MY 1998 air bags to examine how well the redesigned bags are doing compared to their predecessors. Based on the limited data available for analysis, redesigned MY 1998/99 air bags appear to have significantly reduced the fatality rate to out-of-position occupants in low-speed crashes (less than 25 mph delta V) to about 30 percent of the fatality rate of pre-MY 1998 air bags. However, limited real-world data indicate no statistically significant difference in *overall* fatality rates between the pre-MY 1998 and MY 1998/99 air bags. Most test data between matched pairs of air bag vehicles show no difference for belted occupants and small differences for unbelted occupants when comparing the pre-MY 1998 and MY 1998/99 air bags.

The agency also estimated the benefits of an unbelted 29 to 40 kmph (18 to 25 mph) frontal rigid barrier test coupled with an increase in the belted test from the current up to 48 kmph (30 mph) test to an up to 56 kmph (35 mph) test. Assuming *all* vehicles air bags were designed to *only* meet the unbelted 25 mph rigid barrier and oblique tests, an estimated 214 to 397 lives saved by pre-MY 1998 air bags would not be saved. Assuming minor changes to the seat belt and air bag systems of these vehicles to meet the 56 kmph (35 mph) belted test, it is estimated that 6 to 13 belted occupant's lives could be saved by increasing the belted test speed to 56 kmph (35 mph). Overall, 201 to 391 lives saved by pre-MY 1998 air bags might not be saved by the 48 kmph (25

[26] Estimated benefits from at-risk groups and high speed tests can not be added to get a total since there is an overlap in benefits.

mph) unbelted/56 kmph (35 mph) belted option.

Sensitivity analyses are provided on increases in safety belt use and the impact of using the MY 1998/99 air bags as a baseline for determining benefits.

Sled Tests

NHTSA performed several analyses to estimate the impact of using the sled test in place of the 30 mph barrier test. One analytical approach assumed the possibility that air bags designed to the frontal sled test would provide benefits in full frontal impacts (12 o'clock strikes), but might provide no benefit in partial frontal impacts (10, 11, 1, and 2 o'clock strikes). This analysis estimates that if all passenger and driver side air bags were changed to only provide benefits in pure frontals, the only test mode in the sled test, there could be as many as 245 lives that would not be saved by air bags every year for unbelted occupants.

While the generic sled test has been part of FMVSS 208 since MY 1998, these vehicles were not designed from the start with only the generic sled test as the unbelted test, but were redesigned from vehicles originally designed to meet the pre-MY 1998 standards which included a 48 kmph (30 mph) unbelted rigid barrier test. Another set of analyses attempts to provide estimates of the potential loss in benefits if all vehicles were designed to the minimum performance of the generic sled test instead of a full vehicle barrier test in terms of impact severity and speed. The agency estimates that the generic sled test is equivalent to a barrier test of 22 to 25 mph in velocity. The range of estimates are that 214 to 722 fewer fatalities could be prevented if all vehicles were designed to the minimum requirements of a sled test.

Costs

Potential compliance costs for this proposal vary considerably and are dependent upon the method chosen by manufacturers to comply. Methods such as modified fold patterns and inflator adjustments can be accomplished for little or no cost. More sophisticated solutions such as proximity sensors can increase costs significantly. The range of potential costs for the compliance scenarios examined in this analysis is $20–$127 per vehicle (1997 dollars). This amounts to a total potential annual cost of up to $2 billion, based on 15.5 million vehicle sales per year.

Property Damage Savings

Compliance methods that involve the use of suppression technology have the potential to produce significant property damage cost savings because they prevent air bags from deploying unnecessarily. This saves repair costs to replace the passenger side air bag, and frequently to replace windshields damaged by the air bag deployment. Property damage savings from these requirements could total up to $85 over the lifetime of an average vehicle. This amounts to a potential cost savings of nearly $1.3 billion.

Net Cost Per Fatality Prevented

Based on the analysis which assumes manufacturers would make the minimal amount of changes necessary to meet the proposals, net costs per equivalent fatality prevented estimates were made. Property damage savings have the potential to offset all, or nearly all of the cost of meeting this proposal. The maximum range of cost per equivalent fatality saved from the scenarios examined in this analysis is a net savings of $1.3 million per equivalent fatality saved to a net cost of $2.6 million per equivalent fatality saved.

V. Rulemaking Analyses and Notices

A. Executive Order 12866 and DOT Regulatory Policies and Procedures

NHTSA has considered the impact of this rulemaking action under Executive Order 12866 and the Department of Transportation's regulatory policies and procedures. This rulemaking document is economically significant and was reviewed by the Office of Management and Budget under E.O. 12866, ''Regulatory Planning and Review.'' The rulemaking action has also been determined to be significant under the Department's regulatory policies and procedures. NHTSA is placing in the public docket a Preliminary Economic Assessment (PEA) describing the costs and benefits of this rulemaking action. The costs and benefits are summarized earlier in this document.

B. Regulatory Flexibility Act

NHTSA has considered the effects of this rulemaking action under the Regulatory Flexibility Act (5 U.S.C. 601 *et seq.*) We have prepared an Initial Regulatory Flexibility Analysis (IFRA), which is part of the PEA. The IFRA tentatively concludes that the proposal could affect a substantial number of small businesses, but the economic impact on a substantial number of small businesses need not be significant. Small organizations and small governmental units would not be significantly affected since the potential cost impacts associated with this proposed action should only slightly affect the price of new motor vehicles.

The proposed rule would directly affect motor vehicle manufacturers and indirectly affect air bag manufacturers, seating manufacturers and dummy manufacturers.

For passenger car and light truck manufacturers, NHTSA estimates that there are only about four small manufacturers in the United States. These manufacturers serve a niche market, and the agency believes that small manufacturers do not manufacture even 0.1 percent of total U.S. passenger car and light truck production per year. The agency notes that these manufacturers are already required to provide air bags and certify compliance to Standard No. 208's dynamic impact requirements. Since the proposal would add additional test requirements for air bags, it would increase compliance costs for these, as well as other, vehicle manufacturers.

The agency does not believe that there are any small air bag manufacturers.

There are several manufacturers of dummies and/or dummy parts. All of them are considered small businesses. While the proposed rule would not impose any requirements on these manufacturers, it would be expected to have a positive impact on these types of small businesses by increasing demand for dummies.

NHTSA notes that several hundred final stage vehicle manufacturers and alterers could also be affected by this proposal. These manufacturers buy incomplete vehicles, add seating systems to vehicles without seats, and replace existing seats with new ones. If a manufacturer uses a sensing system in the seat for weight or presence sensing, then the second-stage manufacturer or alterer may need to use seats from the original manufacturer or will need to rely on a seat manufacturer to provide the same technology. Otherwise the second-stage manufacturer may need to use the existing seat or else certify compliance with the standard after replacing the seats. We do not have estimates of the costs to these manufacturers at this time. We request those manufacturers to submit estimates as part of their comments on this SNPRM.

NHTSA knows of 11 suppliers of seating systems that are small businesses. There are about 10 suppliers of seating systems that are not small businesses. The small businesses serve a niche market and provide seats for less than two percent of vehicles. Depending on the technology chosen to meet the proposed advanced air bag rule, these suppliers will need to keep up with emerging technology.

The agency believes that the economic impact on many of the manufacturers affected by this proposal would be small. While the small vehicle manufacturers would face additional compliance costs, the agency believes that air bag suppliers would likely provide much of the engineering expertise necessary to meet the new requirements, thereby helping to keep the overall impacts small. The agency also notes that, in the unlikely event that a small vehicle manufacturer did face substantial economic hardship, it could apply for a temporary exemption for up to three years. See 49 CFR Part 555. It could subsequently apply for a renewal of such an exemption. The greatest burden would likely be borne by seating manufacturers who do not supply seats to anyone other than second-stage manufacturers and alterers. Depending on the technology employed by the vehicle manufacturers, these seating manufacturers may need to engage in new business arrangements to permit their seats to work with an existing sensing system. While the proposed requirements would increase the demand for dummies, thereby having a positive impact on dummy manufacturers, the agency does not believe that such increased demand would be sufficient to create a significant economic impact on the dummy manufacturers. The agency requests comments concerning the economic impact on small vehicle manufacturers and dummy manufacturers.

Additional information concerning the potential impacts of the proposed requirements on small entities is presented in the PEA.

C. National Environmental Policy Act

NHTSA has analyzed this proposed amendment for the purposes of the National Environmental Policy Act and determined that it would not have any significant impact on the quality of the human environment.

D. Executive Order 12612 (Federalism)

The agency has analyzed this proposed amendment in accordance with the principles and criteria set forth in Executive Order 12612. NHTSA has determined that the proposed amendment does not have sufficient federalism implications to warrant the preparation of a Federalism Assessment.

E. Unfunded Mandates Act

The Unfunded Mandates Reform Act of 1995 requires agencies to prepare a written assessment of the costs, benefits and other effects of proposed or final rules that include a Federal mandate likely to result in the expenditure by State, local or tribal governments, in the aggregate, or by the private sector, of more than $100 million annually (adjusted for inflation with base year of 1995). These effects are discussed above in Section IV of this preamble and in the PEA. The preamble and the PEA also identify and consider a reasonable number of regulatory alternatives for achieving the objectives of TEA 21. Given the requirement that an agency issuing a final rule subject to the Act select the ''least costly, most cost-effective or least burdensome alternative that achieves the objectives of the rule,'' we request comments that will aid the agency in making that selection.

F. Executive Order 12778 (Civil Justice Reform)

This proposed rule does not have any retroactive effect. Under section 49 U.S.C. 30103, whenever a Federal motor vehicle safety standard is in effect, a state may not adopt or maintain a safety standard applicable to the same aspect of performance which is not identical to the Federal standard, except to the extent that the state requirement imposes a higher level of performance and applies only to vehicles procured for the State's use. 49 U.S.C. 30161 sets forth a procedure for judicial review of final rules establishing, amending or revoking Federal motor vehicle safety standards. That section does not require submission of a petition for reconsideration or other administrative proceedings before parties may file suit in court.

G. Paperwork Reduction Act

If made final, this supplemental notice of proposed rulemaking would include the following ''collections of information,'' as that term is defined in 5 CFR Part 1320 *Controlling Paperwork Burdens on the Public:*

Air Bag Phase-In Reporting Requirements—Once a year for four years, manufacturers would be required to report to NHTSA their annual production of vehicles with advanced air bags. As previously explained, we have proposed a four year phase-in period that ends in 2005. The Office of Management and Budget has approved NHTSA's collection of this information, assigning the collection OMB clearance no. 2127–0599. If this rule is made final, there would be 1,260 burden hours a year on the public resulting from this collection.

Air Bag Warning Labels—New air bag warning labels are proposed in this SNPRM. At present, OMB has approved NHTSA's collection of labeling requirements under OMB clearance no. 2127–0512, *Consolidated Labeling Requirements for Motor Vehicles (Except the Vehicle Identification Number).* This clearance will expire on 6/30/2001, and is cleared for 71,095 burden hours on the public.

NHTSA estimates that the air bag warning labels would increase the information burden on the public as follows. There are 24 motor vehicle manufacturers that would be affected by the air bag warning label requirement, and the labels would be placed on approximately 15,000,000 vehicles per year. The label would be placed on each vehicle once. Since NHTSA would specify the exact content of the labels, the manufacturers would spend 0 hours developing the labels. The technical burden (time required for affixing labels) would be .0002 hours per label. NHTSA estimates that the total annual burden imposed on the public as a result of the air bag warning labels would be 3,000 hours (15 million vehicles multiplied by .0002 hours per label). Since the proposed labels would replace existing labels, this constitutes no additional burden on manufacturers.

Another way of estimating the burden associated with the labels is to assess the non-time related burden, i.e., the costs. The agency requests comments on the costs associated with labeling.

Advanced Air Bag Information in the Owner's Manual—This rulemaking would require advanced air bag information in the owner's manual that is additional to the information already required under the standard. At present, OMB has approved NHTSA's collection of owner's manual requirements under OMB clearance no. 2127–0541 *Consolidated Justification of Owner's Manual Requirements for Motor Vehicles and Motor Vehicle Equipment.* This collection includes the burdens that would be imposed as a result of owners' manual information about air bags. This clearance will expire on 10/31/2001 and is cleared for 1,371 burden hours on the public.

Public comment is sought on NHTSA's estimate of the additional burden imposed on the public by the air bag warning label and whether the SNPRM would impose ''collections of information'' in addition to that for which NHTSA has already obtained clearances from OMB.

H. Regulation Identifier Number (RIN)

The Department of Transportation assigns a regulation identifier number (RIN) to each regulatory action listed in the Unified Agenda of Federal Regulations. The Regulatory Information Service Center publishes the Unified Agenda in April and October of each

year. You may use the RIN contained in the heading at the beginning of this document to find this action in the Unified Agenda.

I. Plain Language

Executive Order 12866 and the President's memorandum of June 1, 1998, require each agency to write all rules in plain language. Application of the principles of plain language includes consideration of the following questions:

—Have we organized the material to suit the public's needs?
—Are the requirements in the rule clearly stated?
—Does the rule contain technical language or jargon that is not clear?
—Would a different format (grouping and order of sections, use of headings, paragraphing) make the rule easier to understand?
—Would more (but shorter) sections be better?
—Could we improve clarity by adding tables, lists, or diagrams?
—What else could we do to make the rule easier to understand?

If you have any responses to these questions, please include them in your comments on this SNPRM.

J. Executive Order 13045

Executive Order 13045 (62 FR 19885, April 23, 1997) applies to any rule that: (1) Is determined to be ''economically significant'' as defined under E.O. 12866, and (2) concerns an environmental, health or safety risk that NHTSA has reason to believe may have a disproportionate effect on children. If the regulatory action meets both criteria, we must evaluate the environmental health or safety effects of the planned rule on children, and explain why the planned regulation is preferable to other potentially effective and reasonably feasible alternatives considered by us.

This rulemaking directly involves decisions based on health risks that disproportionately affect children, namely, the risk of deploying air bags to children. However, this rulemaking serves to reduce, rather than increase, that risk.

K. National Technology Transfer and Advancement Act

Section 12(d) of the National Technology Transfer and Advancement Act (NTTAA) requires NHTSA to evaluate and use existing voluntary consensus standards [27] in its regulatory activities unless doing so would be inconsistent with applicable law (e.g., the statutory provisions regarding NHTSA's vehicle safety authority) or otherwise impractical. In meeting that requirement, we are required to consult with voluntary, private sector, consensus standards bodies. Examples of organizations generally regarded as voluntary consensus standards bodies include the American Society for Testing and Materials (ASTM), the Society of Automotive Engineers (SAE), and the American National Standards Institute (ANSI). If NHTSA does not use available and potentially applicable voluntary consensus standards, we are required by the Act to provide Congress, through OMB, an explanation of the reasons for not using such standards.

We have incorporated the out-of-position tests one and two developed by the International Standards Organization (ISO) as part of the proposed low-risk deployment tests for the out-of-position 5th percentile adult female on the driver-side air bag and for the 6-year-old child on the passenger-side air bag. No other voluntary consensus standards are addressed by this rulemaking.

VI. Submission of Comments

How Can I Influence NHTSA's Thinking on This Proposed Rule?

In developing this SNPRM, we tried to address the concerns of all our stakeholders. Your comments will help us improve this rule. We invite you to provide different views on options we propose, new approaches we have not considered, new data, how this proposed rule may affect you, or other relevant information. We welcome your views on all aspects of this proposed rule, but request comments on specific issues throughout this document. We grouped these specific requests near the end of the sections in which we discuss the relevant issues. Your comments will be most effective if you follow the suggestions below:

Explain your views and reasoning as clearly as possible.

- Provide solid technical and cost data to support your views.
- If you estimate potential costs, explain how you arrived at the estimate.
- Tell us which parts of the SNPRM you support, as well as those with which you disagree.
- Provide specific examples to illustrate your concerns.
- Offer specific alternatives.
- Refer your comments to specific sections of the SNPRM, such as the units or page numbers of the preamble, or the regulatory sections.
- Be sure to include the name, date, and docket number with your comments.

How do I Prepare and Submit Comments?

Your comments must be written and in English. To ensure that your comments are correctly filed in the Docket, please include the docket number of this document in your comments.

Your comments must not be more than 15 pages long. (49 CFR 553.21). We established this limit to encourage you to write your primary comments in a concise fashion. However, you may attach necessary additional documents to your comments. There is no limit on the length of the attachments.

Please submit two copies of your comments, including the attachments, to Docket Management at the address given above under **ADDRESSES**.

In addition, for those comments of 4 or more pages in length, we request that you send 10 additional copies, as well as one copy on computer disc, to: Mr. Clarke Harper, Chief, Light Duty Vehicle Division, NPS–11, National Highway Traffic Safety Administration, 400 Seventh Street, SW, Washington, DC 20590. We emphasize that this is not a requirement. However, we ask that you do this to aid us in expediting our review of all comments. The copy on computer disc may be in any format, although we would prefer that it be in WordPerfect 8.

Comments may also be submitted to the docket electronically by logging onto the Dockets Management System website at http://dms.dot.gov. Click on ''Help & Information'' or ''Help/Info'' to obtain instructions for filing the document electronically.

How Can I Be Sure That My Comments Were Received?

If you wish Docket Management to notify you upon its receipt of your comments, enclose a self-addressed, stamped postcard in the envelope containing your comments. Upon receiving your comments, Docket Management will return the postcard by mail.

How Do I Submit Confidential Business Information?

If you wish to submit any information under a claim of confidentiality, you should submit three copies of your complete submission, including the

[27] Voluntary consensus standards are technical standards developed or adopted by voluntary consensus standards bodies. Technical standards are defined by the NTTAA as ''performance-based or design-specific technical specifications and related management systems practices.'' They pertain to ''products and processes, such as size, strength, or technical performance of a product, process or material.''

information you claim to be confidential business information, to the Chief Counsel, NHTSA, at the address given above under **FOR FURTHER INFORMATION CONTACT**. In addition, you should submit two copies, from which you have deleted the claimed confidential business information, to Docket Management at the address given above under **ADDRESSES**. When you send a comment containing information claimed to be confidential business information, you should include a cover letter setting forth the information specified in our confidential business information regulation. (49 CFR Part 512.)

Will the Agency Consider Late Comments?

We will consider all comments that Docket Management receives before the close of business on the comment closing date indicated above under **DATES.** To the extent possible, we will also consider comments that Docket Management receives after that date. If Docket Management receives a comment too late for us to consider it in developing a final rule (assuming that one is issued), we will consider that comment as an informal suggestion for future rulemaking action.

How Can I Read the Comments Submitted by Other People?

You may read the comments received by Docket Management at the address given above under **ADDRESSES**. The hours of the Docket are indicated above in the same location.

You may also see the comments on the Internet. To read the comments on the Internet, take the following steps:

(1) Go to the Docket Management System (DMS) Web page of the Department of Transportation (http://dms.dot.gov/).

(2) On that page, click on ''search.''

(3) On the next page *(http://dms.dot.gov/search/)*, type in the four-digit docket number shown at the beginning of this document. Example: If the docket number were ''NHTSA–1998–1234,'' you would type ''1234.'' After typing the docket number, click on ''search.''

(4) On the next page, which contains docket summary information for the docket you selected, click on the desired comments. You may download the comments.

Please note that even after the comment closing date, we will continue to file relevant information in the Docket as it becomes available. Further, some people may submit late comments. Accordingly, we recommend that you periodically check the Docket for new material.

List of Subjects

49 CFR Part 552

Administrative practice and procedure, Motor vehicle safety, Reporting and recordkeeping requirements.

49 CFR Part 571

Imports, Motor vehicle safety, Reporting and recordkeeping requirements, Tires.

49 CFR Part 585

Motor vehicle safety, Reporting and recordkeeping requirements.

49 CFR Part 595

Imports, Motor vehicle safety, Motor vehicles.

In consideration of the foregoing, NHTSA proposes to amend 49 CFR Chapter V as follows:

PART 552—PETITIONS FOR RULEMAKING, DEFECT, AND NON-COMPLIANCE ORDERS

1. The authority citation for Part 552 of Title 49 would continue to read as follows:

Authority: 49 U.S.C. 30111, 30118, and 30162; delegation of authority at 49 CFR 1.50.

§ 552.1 through 552.10 [Redesignated as Subpart A]

2. Sections 552.1 through 552.10 would be designated as Subpart A and a new subpart heading would be added to read as follows:

Subpart A—General

3. A new subpart B would be added to Part 552 to read as follows:

Subpart B—Petitions for Expedited Rulemaking To Establish Dynamic Automatic Suppression System Test Procedures for Federal Motor Vehicle Safety Standard No. 208, Occupant Crash Protection

Sec.
552.11 Application.
552.12 Definitions.
552.13 Form of petition.
552.14 Content of petition.
552.15 Processing of petition.

Subpart B—Petitions for Expedited Rulemaking To Establish Dynamic Automatic Suppression System Test Procedures for Federal Motor Vehicle Safety Standard No. 208, Occupant Crash Protection

§ 552.11 Application.

This subpart establishes procedures for the submission and disposition of petitions filed by interested parties to initiate rulemaking to add a test procedure to 49 CFR 571.208, S28.

§ 552.12 Definitions.

For purposes of this subpart, the following definitions apply:

(a) *Dynamic automatic suppression system (DASS)* means a portion of an air bag system that automatically controls whether or not the air bag deploys during a crash by:

(1) Sensing the location of an occupant, moving or still, in relation to the air bag;

(2) Interpreting the occupant characteristics and location information to determine whether or not the air bag should deploy; and

(3) Activating or suppressing the air bag system based on the interpretation of characteristics and occupant location information.

(b) *Automatic suppression zone or ASZ* means a three-dimensional zone adjacent to the air bag cover, specified by the vehicle manufacturer, where air bag deployment will be suppressed by the DASS if a vehicle occupant enters the zone under specified conditions.

(c) *Standard No.* 208 means 49 CFR 571.208.

§ 552.13 Form of petition.

Each petition filed under this subpart shall—

(a) Be submitted to: Administrator, National Highway Traffic Safety Administration, 400 Seventh Street, S.W., Washington, DC 20590.

(b) Be written in the English language.

(c) State the name and address of the petitioner.

(d) Set forth in full the data, views and arguments of the petitioner supporting the requested test procedure, including all of the content information specified by § 552.14. Any documents incorporated by reference in the procedure must be submitted with the petition.

(e) Specify and segregate any part of the information and data submitted that the petitioner wishes to have withheld from public disclosure in accordance with Part 512 of this chapter.

(f) Not request confidential treatment for any aspect of the requested test procedure and, to the extent confidential treatment is requested concerning a particular DASS or data and analysis submitted in support of the petition, provide a general non-confidential description of the operation of the DASS and of the data and analysis supporting the petition.

(g) Set forth a requested effective date and be submitted at least nine months before that date.

§ 552.14 Content of petition.

The petitioner shall provide the following information:

(a) A set of proposed test procedures for S28.1, S28.2, S28.3, and S28.4 of Federal Motor Vehicle Safety Standard No. 208 which the petitioner believes are appropriate for assessing a particular dynamic automatic suppression system.

(1) For S28.1 of Standard No. 208, the petitioner shall specify at least one specific position for the Part 572, subpart O 5th percentile female dummy that is:

(i) Outside but adjacent to the ASZ, and

(ii) Representative of an occupant position that is likely to occur during a frontal crash.

(2) For S28.2 of Standard No. 208, the petitioner shall specify at least one specific position for the Part 572 Subpart P 3-year-old child dummy and at least one specific position for the Part 572 Subpart N 6-year-old child dummy that are:

(i) Outside but adjacent to the ASZ, and

(ii) Representative of occupant positions that are likely to occur during a frontal crash where pre-crash braking occurs.

(3) For S28.3 of Standard No. 208, the petitioner shall specify a procedure which tests the operation of the DASS by moving a test device toward the driver air bag in a manner that simulates the motion of an occupant during pre-crash braking or other pre-crash maneuver. The petitioner shall include a complete description, including drawings and instrumentation, of the test device employed in the proposed test. The petitioner shall include in the procedure a means for determining whether the driver air bag was suppressed before any portion of the specified test device entered the ASZ during the test. The procedure must also include a means of determining when the specified test device occupies the ASZ.

(4) For S28.4 of Standard No. 208, the petitioner shall specify a procedure which tests the operation of the DASS by moving a test device toward the passenger air bag in a manner that simulates the motion of an occupant during pre-crash braking or other pre-crash maneuver. The petitioner shall include a complete description, including drawings and instrumentation, of the test device employed in the proposed test. The petitioner shall include in the procedure a means for determining whether the passenger air bag was suppressed before any portion of the specified test device entered the ASZ during the test. The procedure must also include a means of determining when the specified test device occupies the ASZ.

(b) A complete description and explanation of the particular DASS that the petitioner believes will be appropriately assessed by the recommended test procedures. This must include:

(1) A complete description of the logic used by the DASS in determining whether to suppress the air bag or allow it to deploy. Such description must include flow charts or similar materials outlining the operation of the system logic, the system reaction time, the time duration used to evaluate whether the air bag should be suppressed or deployed, changes, if any, in system performance based on the size of an occupant and vehicle speed, and a description of the size and shape of the zone where under similar circumstances and conditions the DASS may either allow or suppress deployment. Such description shall also address whether and how the DASS discriminates between an occupant's torso or head entering the ASZ as compared to an occupant's hand or arm, and whether and how the DASS discriminates between an occupant entering the ASZ and an inanimate object such as a newspaper or ball entering the ASZ.

(2) Detailed specifications for the size and shape of the ASZ, including whether the suppression zone is designed to change size or shape depending on the vehicle speed, occupant size, or other factors.

(c) Analysis and data supporting the appropriateness, repeatability, reproducibility and practicability of each of the proposed test procedures.

(1) For the procedures proposed for inclusion in S28.1 and S28.2 of Standard No. 208, the petitioner shall provide the basis for the proposed dummy positions, including but not limited to, why the positions are representative of what is likely to occur in real world crashes.

(2) For the procedures proposed for inclusion in S28.3 and S28.4 of Standard No. 208, the petitioner shall provide:

(i) A complete explanation of the means used in the proposed test to ascertain whether the air bag is suppressed or activated during the test.

(ii) A complete description of the means used to evaluate the ability of a dynamic system to detect and respond to an occupant moving toward an air bag, including the method used to move a test device toward an air bag at speeds representative of occupant movement during pre-crash braking or other pre-crash maneuver.

(iii) The procedure used for locating the test device inside a test vehicle in preparation for testing, including an accounting of the reference points used to specify such location.

(iv) An explanation of the methods used to measure the amount of time needed by a suppression system to suppress an air bag once a suppression triggering event occurs.

(v) High speed film or video of at least two tests of the DASS using the proposed test procedure.

(vi) Data generated from not less than two tests of the DASS using the proposed test procedure, including an account of the data streams monitored during testing and complete samples of these data streams from not less than two tests performed under the proposed procedure.

(d) Analysis concerning the variety of potential DASS designs for which the requested test procedure is appropriate; e.g., whether the test procedures are appropriate only for the specific DASS design contemplated by the petitioner, for all DASS designs incorporating the same technologies, or for all DASS designs.

§ 552.15 Processing of petition.

(a) NHTSA will process any petition that contains the information specified by this subpart. If a petition fails to provide any of the information, NHTSA will not process the petition but will advise the petitioner of the information that must be provided if the agency is to process the petition. The agency will seek to notify the petitioner of any such deficiency within 30 days after receipt of the petition.

(b) At any time during the agency's consideration of a petition submitted under this part, the Administrator may request the petitioner to provide additional supporting information and data and/or provide a demonstration of any of the requested test procedures. The agency will seek to make any such request within 60 days after receipt of the petition. Such demonstration may be at either an agency designated facility or one chosen by the petitioner, provided that, in either case, the facility must be located in North America. If such a request is not honored to the satisfaction of the agency, the petition will not receive further consideration until the requested information is submitted.

(c) The agency will publish in the **Federal Register** either a Notice of Proposed Rulemaking proposing adoption of the requested test procedures, possibly with changes and/or additions, or a notice denying the petition. The agency will seek to issue

either notice within 120 days after receipt of a complete petition. However, this time period may be extended by any time period during which the agency is awaiting additional information it requests from the petitioner or is awaiting a requested demonstration. The agency contemplates a 30 day comment period for any Notice of Proposed Rulemaking, and will endeavor to issue a final rule within 60 days thereafter.

PART 571—FEDERAL MOTOR VEHICLE SAFETY STANDARDS

4. The authority citation for Part 571 of Title 49 would continue to read as follows:

Authority: 49 U.S.C. 322, 30111, 30115, 30117, and 30166; delegation of authority at 49 CFR 1.50.

5. Section 571.208 would be amended by revising S3, S4.5.1 heading, S4.5.1(b)(1), S4.5.1(b)(2), 4.5.1(e), S4.5.1(f), S4.5.4, S5.1, S5.1.1, S5.1.2, S6.1, S6.2, 6.4, S8.1.5 and S13, removing S4.5.5, adding S4.1.5.4, S4.2.6.3, S4.7, S4.8, S4.9, S5.4, S5.4.1, S5.4.2, S5.4.2.1, S5.4.2.2, S5.4.2.3, S5.4.2.4, S6.6, S6.7, S14 through S33.5, and adding new figures 8, 9 and 10 in numerical order and adding Appendix A at the end of the section after the figures to read as follows:

§ 571.208 Standard No. 208; Occupant crash protection.

[*Proposed high speed test Alternative 1*—unbelted rigid barrier (29–48 km/h) (18–30 mph), belted rigid barrier (0–48 km/h) (0–30 mph)—consists of proposed sections S5.1.1, S5.1.2, S6.1, S6.2(b), S6.3, S6.4(b), S6.5, S6.6, S6.7, S14.3, S15.1, S15.2, S15.3, S15.4, S16.1(a), S16.1(b), S16.2, S16.3, S17.1, and S18. It does not include S5.4 or S17.2, i.e., if Alternative 1 were adopted, neither S5.4 nor S17.2 would be adopted. *Proposed high speed test Alternative 2*—unbelted offset deformable barrier (35–56 km/h) (22–35 mph), belted rigid barrier(0–48 km/h) (0–30 mph)—consists of proposed sections S5.1.1, S5.4, S6.1, S6.2(b), S6.3, S6.4(b), S6.5, S6.6, S6.7, S14.3, S15.1, S15.3, S15.4, S16.1(a), S16.2, S16.3, S17.1, S17.2, and S18. It does not include S5.1.2, S15.2, or S16.1(b), i.e., if Alternative 2 were adopted, neither S5.1.2 nor S15.2 nor S16.1(b) would be adopted.]

* * * * *

S3. *Application.*

(a) This standard applies to passenger cars, multipurpose passenger vehicles, trucks, and buses. In addition, S9, *Pressure vessels and explosive devices*, applies to vessels designed to contain a pressurized fluid or gas, and to explosive devices, for use in the above types of motor vehicles as part of a system designed to provide protection to occupants in the event of a crash.

(b) Notwithstanding any language to the contrary, any vehicle manufactured after March 19, 1997 and before September 1, 2005 that is subject to a dynamic crash test requirement conducted with unbelted dummies may meet the requirements specified in S13 instead of the applicable unbelted requirement, unless the vehicle is certified to meet the requirements specified in S14.3, S15, S17, S19, S21, S23, S25, S30, and S32.

(c) For vehicles which are certified to meet the requirements specified in S13 instead of the otherwise applicable dynamic crash test requirement conducted with unbelted dummies, compliance with S13 shall, for purposes of Standards No. 201, 203 and 209, be deemed as compliance with the unbelted frontal barrier requirements of S5.1.

* * * * *

S4.1.5.4 *Passenger cars certified to S14.* At each front outboard designated seating position meet the frontal crash protection requirements of S5.1.2 [under Alternative 1] [or] S5.4 [under Alternative 2] by means that require no action by vehicle occupants. A vehicle shall not be deemed to be in noncompliance with this standard if its manufacturer establishes that it did not have reason to know in the exercise of due care that such vehicle is not in conformity with the requirement of this standard.

* * * * *

S4.2.6.3 *Trucks, buses, and multipurpose passenger vehicles with a GVWR of 3,855 kg (8,500 pounds) or less and an unloaded vehicle weight of 2,495 kg (5,500 pounds) or less certified to S14.* Each truck, bus, or multipurpose passenger vehicle with a GVWR of 3,855 kg (8,500 pounds) or less and an unloaded vehicle weight of 2,495 kg (5,500 pounds) or less certified to S14 shall, at each front outboard designated seating position, meet the frontal crash protection requirements of S5.1.2 [under Alternative 1] [or] S5.4 [under Alternative 2] by means that require no action by vehicle occupants. A vehicle shall not be deemed to be in noncompliance with this standard if its manufacturer establishes that it did not have reason to know in the exercise of due care that such vehicle is not in conformity with the requirement of this standard.

* * * * *

S4.5.1 *Labeling and owner's manual information.*

* * * * *

(b) * * *

(1) Except as provided in S4.5.1(b)(2), each vehicle shall have a label permanently affixed to either side of the sun visor, at the manufacturer's option, at each front outboard seating position that is equipped with an inflatable restraint. The label shall conform in content to the label shown in either Figure 6a or 6b of this standard, as appropriate, and shall comply with the requirements of S4.5.1(b)(1)(i) through S4.5.1(b)(1)(iv).

(i) The heading area shall be yellow with the word ''WARNING'' and the alert symbol in black.

(ii) The message area shall be white with black text. The message area shall be no less than 30 cm^2 (4.7 in^2).

(iii) The pictogram shall be black with a red circle and slash on a white background. The pictogram shall be no less than 30 mm (1.2 inches) in diameter.

(iv) If the vehicle does not have a back seat, the label shown in Figure 6a or 6b may be modified by omitting the statement: ''The BACK SEAT is the SAFEST place for children.''

(2) Vehicles manufactured after September 1, 2002 and certified to meet the requirements specified in S19, S21, and S23, shall have a label permanently affixed to either side of the sun visor, at the manufacturer's option, at each front outboard seating position that is equipped with an inflatable restraint. The label shall conform in content to the label shown in Figure 8 of this standard and shall comply with the requirements of S4.5.1(b)(2)(i) through S4.5.1(b)(2)(iv).

(i) The heading area shall be yellow with the word ''CAUTION'' and the alert symbol in black.

(ii) The message area shall be white with black text. The message area shall be no less than 30 cm2 (4.7 in^2).

(iii) The pictogram shall be black on a white background. The pictogram shall be no less than 30 mm (1.2 inches) in length.

(iv) If the vehicle does not have a back seat, the label shown in Figure 8 may be modified by omitting the statement: ''The BACK SEAT is the SAFEST place for CHILDREN.''

* * * * *

(e) *Label on the dashboard.*

(1) Except as provided in S4.5.1(e)(2), each vehicle that is equipped with an inflatable restraint for the passenger position shall have a label attached to a location on the dashboard or the steering wheel hub that is clearly visible

from all front seating positions. The label need not be permanently affixed to the vehicle. This label shall conform in content to the label shown in Figure 7 of this standard, and shall comply with the requirements of S4.5.1(e)(1)(i) through S4.5.1(e)(1)(iii).

(i) The heading area shall be yellow with the word ''WARNING'' and the alert symbol in black.

(ii) The message area shall be white with black text. The message area shall be no less than 30 cm^2 (4.7 in^2).

(iii) If the vehicle does not have a back seat, the label shown in Figure 7 may be modified by omitting the statement: ''The back seat is the safest place for children 12 and under.''

(2) Vehicles manufactured after September 1, 2002 and certified to meet the requirements specified in S19, S21, and S23, that are equipped with an inflatable restraint for the passenger position shall have a label attached to a location on the dashboard or the steering wheel hub that is clearly visible from all front seating positions. The label need not be permanently affixed to the vehicle. This label shall conform in content to the label shown in Figure 9 of this standard, and shall comply with the requirements of S4.5.1(e)(2)(i) through S4.5.1(e)(2)(iii).

(i) The heading area shall be yellow with black text.

(ii) The message area shall be white with black text. The message area shall be no less than 30 cm^2 (4.7 in^2).

(iii) If the vehicle does not have a back seat, the label shown in Figure 9 may be modified by omitting the statement: ''The back seat is the safest place for children.''

(f) *Information to appear in owner's manual.*

(1) The owner's manual for any vehicle equipped with an inflatable restraint system shall include a description of the vehicle's air bag system in an easily understandable format. The owner's manual shall include a statement to the effect that the vehicle is equipped with an air bag and lap/shoulder belt at one or both front outboard seating positions, and that the air bag is a supplemental restraint at those seating positions. The information shall emphasize that all occupants, including the driver, should always wear their seat belts whether or not an air bag is also provided at their seating position to minimize the risk of severe injury or death in the event of a crash. The owner's manual shall also provide any necessary precautions regarding the proper positioning of occupants, including children, at seating positions equipped with air bags to ensure maximum safety protection for those occupants. The owner's manual shall also explain that no objects should be placed over or near the air bag on the instrument panel, because any such objects could cause harm if the vehicle is in a crash severe enough to cause the air bag to inflate.

(2) For any vehicle certified to meet the requirements specified in S14.3, S15, S17, S19, S21, S23, S25, S30, and S32, the manufacturer shall also include in the vehicle's owner's manual a discussion of the advanced passenger air bag system installed in the vehicle. The discussion shall be written to explain the proper functioning of the advanced air bag system and shall provide a summary of the actions that may affect the proper functioning of the system. The discussion shall include, as a minimum, the following topics:

(a) presentation and explanation of the main components of the advanced passenger air bag system.

(b) explanation of how the components function together as part of the advanced passenger air bag system.

(c) basic requirements for proper operation, including an explanation of the actions that may affect the proper functioning of the system.

(d) a complete description of the passenger air bag suppression system installed in the vehicle including a discussion of any suppression zone.

(e) an explanation of the interaction of the advanced passenger air bag system with other vehicle components, such as seat belts, seats or other components.

(f) a summary of the expected outcomes when child restraint systems, children and small teenagers or adults are both properly and improperly positioned in the passenger seat, including cautionary advice against improper placement of child restraint systems.

(g) tips and guidelines to improve consumer understanding of the proper use of the advanced passenger air bag system.

(h) information on how to contact the vehicle manufacturer concerning modifications for persons with disabilities that may affect the advanced air bag system.

* * * * *

S4.5.4 *Passenger air bag manual cut-off device.* Passenger cars, trucks, buses, and multipurpose passenger vehicles manufactured before September 1, 2005 may be equipped with a device that deactivates the air bag installed at the right front passenger position in the vehicle, if all the conditions in S4.5.4.1 through S4.5.4.4 are satisfied.

* * * * *

S4.7 *Selection of compliance options.* Where manufacturer options are specified, the manufacturer shall select the option by the time it certifies the vehicle and may not thereafter select a different option for the vehicle. Each manufacturer shall, upon request from the Office of Vehicle Safety Compliance, provide information regarding which of the compliance options it has selected for a particular vehicle or make/model.

S4.8 *Values and tolerances.* Wherever a range of values or tolerances are specified, requirements shall be met at all values within the range of values or tolerances. All angles and directions (*e.g.,* vertical or horizontal) specified are approximate.

S4.9 *Metric values.* Specifications and requirements are given in metric units with English units provided for reference. The metric values are controlling.

* * * * *

S5 *Occupant crash protection requirements.*

S5.1 *Frontal barrier crash test.*

S5.1.1 *Belted test.* Impact a vehicle traveling longitudinally forward at any speed, up to and including 48 km/h (30 mph), into a fixed rigid barrier that is perpendicular to the line of travel of the vehicle, or at any angle up to 30 degrees in either direction from the perpendicular to the line of travel of the vehicle, under the applicable conditions of S8 and S10, including S10.9 (manual belt adjustment). For vehicles certified to S14 of this standard, the test dummy specified in S8.1.8 placed in each front outboard designated seating position shall meet the injury criteria of S6.1, S6.2(b), S6.3, S6.4(b), S6.5, and S6.6 of this standard. All other vehicles to which S5.1.1 is applicable shall meet the injury criteria of S6.1, S6.2(a), S6.3, S6.4(a), and S6.5.

S5.1.2 *Unbelted test.* Impact a vehicle traveling longitudinally forward at any speed, between 29 km/h (18 mph) and 48 km/h (30 mph), inclusive, into a fixed rigid barrier that is perpendicular to the line of travel of the vehicle, or at any angle up to 30 degrees in either direction from the perpendicular to the line of travel of the vehicle under the applicable conditions of S8 and S10, excluding S10.9. The test dummy specified in S8.1.8 placed in each front outboard designated seating position shall meet the injury criteria of S6.1, S6.2(b), S6.3, S6.4(b), S6.5, and S6.6 of this standard.

* * * * *

S5.4 *Offset deformable barrier crash test.*

S5.4.1 *General provisions.* Place a Part 572 Subpart E Hybrid III 50th percentile adult male test dummy at each front outboard seating position of

the vehicle, in accordance with procedures specified in S10. Impact the vehicle traveling longitudinally forward at any speed, between 35.4 km/h (22 mph) and 56 km/h (35 mph), inclusive, into a fixed offset deformable barrier under the conditions specified in S5.4.2 of this standard. The test dummies shall meet the injury criteria specified in S6.1, S6.2(b), S6.3, S6.4(b), S6.5, and S6.6 of this standard.

S5.4.2 *Test conditions.*

S5.4.2.1 *Offset frontal deformable barrier.* The offset frontal deformable barrier shall conform to the specifications set forth in Subpart B of Part 587 of this chapter.

S5.4.2.2 *General test conditions.* All of the test conditions specified in S8.1 of this standard apply.

S5.4.2.3 *Dummy seating and positioning.* The anthropomorphic test dummies are seated and positioned as specified in S10 of this standard.

S5.4.2.4 *Impact configuration.* The test vehicle shall impact the barrier with the longitudinal line of the vehicle parallel to the line of travel, and perpendicular to the barrier face. The test vehicle shall be aligned so that the vehicle strikes the barrier with 40 percent overlap on either the left or the right side of the vehicle, with the vehicle's width engaging the barrier face such that the vehicle's longitudinal centerline is offset outboard of the edge of the barrier face by 10 percent of the vehicle's width ± 25 mm (1.0 inch) as illustrated in Figure 10. The vehicle width is defined as the maximum dimension measured across the widest part of the vehicle, including bumpers and molding but excluding such components as exterior mirrors, flexible mud flaps, marker lamps, and dual rear wheel configurations.

* * * * *

S6.1 All portions of the test dummy shall be contained within the outer surfaces of the vehicle passenger compartment.

S6.2 *Head injury criteria.*

(a) The resultant acceleration at the center of gravity of the head shall be such that the expression:

$$\left[\frac{1}{(t_2 - t_1)}\int_{t_1}^{t_2} a\,dt\right]^{2.5}(t_2 - t_1)$$

shall not exceed 1,000 where a is the resultant acceleration expressed as a multiple of g (the acceleration of gravity), and t_1 and t_2 are any two points in time during the crash of the vehicle which are separated by not more than a 36 millisecond time interval.

(b) The resultant acceleration at the center of gravity of the head shall be such that the expression:

$$\left[\frac{1}{(t_2 - t_1)}\int_{t_1}^{t_2} a\,dt\right]^{2.5}(t_2 - t_1)$$

shall not exceed 700 where a is the resultant acceleration expressed as a multiple of g (the acceleration of gravity), and t_1 and t_2 are any two points in time during the crash of the vehicle which are separated by not more than a 15 millisecond time interval.

* * * * *

S6.4 *Chest deflection.*

(a) Compression deflection of the sternum relative to the spine, as determined by instrumentation shown in drawing 78051–218, revision U incorporated by reference in Part 572, subpart E of this chapter, shall not exceed 76 mm (3 inches).

(b) Compressive deflection of the sternum relative to the spine, as determined by instrumentation shown in drawing 78051–317, revision A, incorporated by reference in Part 572, subpart E, shall not exceed 63 mm (2.5 inches).

* * * * *

S6.6 *Neck injury.* The biomechanical neck injury predictor, Nij, shall not exceed a value of 1.0 at any point in time. The following procedure shall be used to compute Nij. The axial force (Fz) and flexion/extension moment about the occipital condyles (My) shall be used to calculate four combined injury predictors, collectively referred to as Nij. These four combined values represent the probability of sustaining each of four primary types of cervical injuries; namely tension-extension (N_{TE}), tension-flexion (N_{TF}), compression-extension (N_{CE}), and compression-flexion (N_{CF}) injuries. Axial force shall be filtered at SAE class 1000 and flexion/extension moment (My) shall be filtered at SAE class 600. Shear force, which shall be filtered at SAE class 600, is used only in conjunction with the measured moment to calculate the effective moment at the location of the occipital condyles. The equation for calculating the Nij criteria is given by:

Nij = (Fz / Fzc) + (My / Myc)

where Fzc and Myc are critical values corresponding to:

Fzc = 4500 N (1012 lbf) for tension
Fzc = 4500 N (1012 lbf) for compression
Myc = 310 Nm (229 lbf-ft) for flexion about occipital condyles
Myc = 125 Nm (92 lbf-ft) for extension about occipital condyles

Each of the four Nij values shall be calculated at each point in time, and all four values shall not exceed 1.0 at any point in time. When calculating N_{TE} and N_{TF}, all compressive loads shall be set to zero. Similarly, when calculating N_{CE} and N_{CF}, all tensile loads shall be set to zero. In a similar fashion, when calculating N_{TE} and N_{CE}, all flexion moments shall be set to zero. Likewise, when calculating N_{TF} and N_{CF}, all extension moments shall be set to zero.

S6.7 *Test duration for purpose of measuring injury criteria.* For tests conducted pursuant to S5.1.1, S5.1.2, and S5.4, the injury criteria shall be met up to 300 milliseconds after the vehicle strikes the barrier.

* * * * *

S8.1.5 Movable vehicle windows and vents are placed in the fully closed position, unless the vehicle manufacturer chooses to specify a different adjustment position prior to the time it certifies the vehicle.

* * * * *

S13 *Alternative unbelted test available, under S3(b) of this standard, for certain vehicles manufactured before September 1, 2005.*

* * * * *

S14 *Advanced air bag requirements for passenger cars and for trucks, buses, and multipurpose passenger vehicles with a GVWR of 3,855 kg (8500 pounds) or less and an unloaded vehicle weight of 2,495 kg (5500 pounds) or less, except for walk-in van-type trucks or vehicles designed to be sold exclusively to the U.S. Postal Service.*

S14.1 *Vehicles manufactured on or after September 1, 2002 and before September 1, 2005.*

(a) For vehicles manufactured on or after September 1, 2002 and before September 1, 2005, a percentage of the manufacturer's production, as specified in S14.1.1, shall meet the requirements specified in S14.3, S15, S17, S19, S21, S23, S25, S30, and S32 (in addition to the other requirements specified in this standard).

(b) Manufacturers that manufacture two or fewer carlines, as that term is defined at 49 CFR 583.4, may, at the option of the manufacturer, meet the requirements of this paragraph instead of paragraph (a) of this section. Each vehicle manufactured on or after September 1, 2003 and before September 1, 2005 shall meet the requirements specified in S14.3, S15, S17, S19, S21, S23, S25, S30, and S32 (in addition to the other requirements specified in this standard).

(c) Each vehicle that is manufactured in two or more stages or that is altered (within the meaning of section 567.7 of

this chapter) after having previously been certified in accordance with Part 567 of this chapter is not subject to the requirements of S14.1.

(d) Vehicles manufactured by a manufacturer that produces fewer than 5,000 vehicles worldwide annually are not subject to the requirements of S14.1.

S14.1.1 *Phase-in schedule.*

S14.1.1.1 *Vehicles manufactured on or after September 1, 2002 and before September 1, 2003.* Subject to S14.1.2(a), for vehicles manufactured by a manufacturer on or after September 1, 2002 and before September 1, 2003, the amount of vehicles complying with S14.3, S15, S17, S19, S21, S23, S25, S30, and S32 shall be not less than 25 percent of:

(a) The manufacturer's average annual production of vehicles manufactured on or after September 1, 2000 and before September 1, 2003, or

(b) The manufacturer's production on or after September 1, 2002 and before September 1, 2003.

S14.1.1.2 *Vehicles manufactured on or after September 1, 2003 and before September 1, 2004.* Subject to S14.1.2(b), for vehicles manufactured by a manufacturer on or after September 1, 2003 and before September 1, 2004, the amount of vehicles complying with S14.3, S15, S17, S19, S21, S23, S25, S30, and S32 shall be not less than 40 percent of:

(a) The manufacturer's average annual production of vehicles manufactured on or after September 1, 2001 and before September 1, 2004, or

(b) The manufacturer's production on or after September 1, 2003 and before September 1, 2004.

S14.1.1.3 *Vehicles manufactured on or after September 1, 2004 and before September 1, 2005.* Subject to S14.1.2(c), for vehicles manufactured by a manufacturer on or after September 1, 2004 and before September 1, 2005, the amount of vehicles complying with S14.3, S15, S17, S19, S21, S23, S25, S30, and S32 shall be not less than 70 percent of:

(a) The manufacturer's average annual production of vehicles manufactured on or after September 1, 2002 and before September 1, 2005, or

(b) The manufacturer's production on or after September 1, 2004 and before September 1, 2005.

S14.1.2 *Calculation of complying vehicles.*

(a) For the purposes of complying with S14.1.1.1, a manufacturer may count a vehicle if it is manufactured on or after [the date 30 days after publication of the final rule would be inserted], but before September 1, 2003.

(b) For purposes of complying with S14.1.1.2, a manufacturer may count a vehicle if it:

(1) Is manufactured on or after [the date 30 days after publication of the final rule would be inserted], but before September 1, 2004, and

(2) Is not counted toward compliance with S14.1.1.1.

(c) For purposes of complying with S14.1.1.3, a manufacturer may count a vehicle if it:

(1) Is manufactured on or after [the date 30 days after publication of the final rule would be inserted], but before September 1, 2005, and

(2) Is not counted toward compliance with S14.1.1.1 or S14.1.1.2.

S14.1.3 *Vehicles produced by more than one manufacturer.*

S14.1.3.1 For the purpose of calculating average annual production of vehicles for each manufacturer and the number of vehicles manufactured by each manufacturer under S14.1.1, a vehicle produced by more than one manufacturer shall be attributed to a single manufacturer as follows, subject to S14.1.3.2.

(a) A vehicle which is imported shall be attributed to the importer.

(b) A vehicle manufactured in the United States by more than one manufacturer, one of which also markets the vehicle, shall be attributed to the manufacturer which markets the vehicle.

S14.1.3.2 A vehicle produced by more than one manufacturer shall be attributed to any one of the vehicle's manufacturers specified by an express written contract, reported to the National Highway Traffic Safety Administration under 49 CFR Part 585, between the manufacturer so specified and the manufacturer to which the vehicle would otherwise be attributed under S14.1.3.1.

S14.2 *Vehicles manufactured on or after September 1, 2005.* Each vehicle shall meet the requirements specified in S14.3, S15, S17, S19, S21, S23, S25, S30, and S32 (in addition to the other requirements specified in this standard).

S14.3 *Barrier test requirements using 50th percentile adult male dummies.*

S14.3.1 *Rigid barrier belted test.* Each vehicle that is certified as complying with S14 shall, at each front outboard designated seating position, meet the injury criteria specified in S6.1, S6.2(b), S6.3, S6.4(b), S6.5, and S6.6 when tested under S5.1.1. A vehicle shall not be deemed to be in noncompliance with this paragraph if its manufacturer establishes that it did not have reason to know in the exercise of due care that such vehicle is not in conformity with the requirements of this paragraph.

S14.3.2 *Rigid barrier unbelted test.* Each vehicle that is certified as complying with S14 shall comply with the requirements of S4.1.5.4 or S4.2.6.3 by means of an inflatable restraint system at the driver's and right front passenger's position that meets the injury criteria specified in S6.1, S6.2(b), S6.3, S6.4(b), S6.5, and S6.6 when tested under S5.1.2. A vehicle shall not be deemed to be in noncompliance with this paragraph if its manufacturer establishes that it did not have reason to know in the exercise of due care that such vehicle is not in conformity with the requirements of this paragraph.

S14.3.2 *Offset deformable barrier unbelted test.* Each vehicle that is certified as complying with S14 of this standard shall comply with the requirements of S4.1.5.4 or S4.2.6.3 that meets the injury criteria specified in S6.1, S6.2(b), S6.3, S6.4(b), S6.5, and S6.6 when tested under S5.4. A vehicle shall not be deemed to be in noncompliance with this paragraph if its manufacturer establishes that it did not have reason to know in the exercise of due care that such vehicle is not in conformity with the requirements of this paragraph.

S15 *Rigid barrier test requirements using 5th percentile adult female dummies.*

S15.1 *Belted test.* Each vehicle subject to S15 shall, at each front outboard designated seating position, meet the injury criteria specified in S15.3 of this standard when the vehicle is crash tested in accordance with the procedures specified in S16 of this standard with the anthropomorphic test dummy restrained by a Type 2 seat belt assembly. A vehicle shall not be deemed to be in noncompliance with this paragraph if its manufacturer establishes that it did not have reason to know in the exercise of due care that such vehicle is not in conformity with the requirements of this paragraph.

S15.2 *Unbelted test.* Each vehicle subject to S15 shall, at each front outboard designated seating position, meet the injury criteria specified in S15.3 of this standard when the vehicle is crash tested in accordance with the procedures specified in S16 of this standard with the anthropomorphic test dummy unbelted. A vehicle shall not be deemed to be in noncompliance with this paragraph if its manufacturer establishes that it did not have reason to know in the exercise of due care that such vehicle is not in conformity with the requirements of this paragraph.

S15.3 *Injury criteria (5th percentile adult female dummy).*

S15.3.1 *All portions of the test dummy shall be contained within the outer surfaces of the vehicle passenger compartment.*

S15.3.2 The resultant acceleration at the center of gravity of the head shall be such that the expression:

$$\left[\frac{1}{(t_2 - t_1)}\int_{t_1}^{t_2} a\,dt\right]^{2.5}(t_2 - t_1)$$

shall not exceed 700 where a is the resultant acceleration expressed as a multiple of g (the acceleration of gravity), and t_1 and t_2 are any two points in time during the crash of the vehicle which are separated by not more than a 15 millisecond time interval.

S15.3.3 The resultant acceleration calculated from the output of the thoracic instrumentation shown in drawing [a drawing incorporated by reference in Part 572 would be identified in the final rule] shall not exceed 60 g's, except for intervals whose cumulative duration is not more than 3 milliseconds.

S15.3.4 Compression deflection of the sternum relative to the spine, as determined by instrumentation shown in drawing [a drawing incorporated by reference in Part 572 would be identified in the final rule] shall not exceed 52 mm (2.0 inches).

S15.3.5 The force transmitted axially through each thigh shall not exceed 6805 N (1530 pounds).

S15.3.6 The biomechanical neck injury predictor, Nij, shall not exceed a value of 1.0 at any point in time. The following procedure shall be used to compute Nij. The axial force (Fz) and flexion/extension moment about the occipital condyles (My) shall be used to calculate four combined injury predictors, collectively referred to as Nij. These four combined values represent the probability of sustaining each of four primary types of cervical injuries; namely tension-extension (N_{TE}), tension-flexion (N_{TF}), compression-extension (N_{CE}), and compression-flexion (N_{CF}) injuries. Axial force shall be filtered at SAE class 1000 and flexion/extension moment (My) shall be filtered at SAE class 600. Shear force, which shall be filtered at SAE class 600, is used only in conjunction with the measured moment to calculate the effective moment at the location of the occipital condyles. The equation for calculating the Nij criteria is given by:

N_{ij} = (Fz / Fzc) + (My / Myc)

where Fzc and Myc are critical values corresponding to:

Fzc = 3370 N (758 lbf) for tension
Fzc = 3370 N (758 lbf) for compression
Myc = 155 Nm (114 lbf-ft) for flexion about occipital condyles
Myc = 62 Nm (46 lbf-ft) for extension about occipital condyles

Each of the four Nij values shall be calculated at each point in time, and all four values shall not exceed 1.0 at any point in time. When calculating N_{TE} and N_{TF}, all compressive loads shall be set to zero. Similarly, when calculating N_{CE} and N_{CF}, all tensile loads shall be set to zero. In a similar fashion, when calculating N_{TE} and N_{CE}, all flexion moments shall be set to zero. Likewise, when calculating N_{TF} and N_{CF}, all extension moments shall be set to zero.

S15.4 *Test duration for purpose of measuring injury criteria.* For tests conducted pursuant to S15 and S17, the injury criteria of S15.3 shall be met up to 300 milliseconds after the vehicle strikes the barrier. For tests conducted pursuant to S26, the injury criteria shall be met up to 100 milliseconds after the air bag deploys.

S16. *Test procedures for rigid barrier test requirements using 5th percentile adult female dummies.*

S16.1 *General provisions.* Crash testing to determine compliance with the requirements of S15 of this standard is conducted as specified in the following paragraphs (a) and (b).

(a) *Belted test.* Place a Part 572 Subpart O 5th percentile adult female test dummy at each front outboard seating position of a vehicle, in accordance with procedures specified in S16.3 of this standard, including S16.3.5. Impact the vehicle traveling longitudinally forward at any speed, up to and including 48 km/h (30 mph), into a fixed rigid barrier that is perpendicular within a tolerance of ± 5 degrees to the line of travel of the vehicle under the applicable conditions of S16.2 of this standard. The dummies shall meet the injury criteria specified in S15.3 of this standard.

(b) *Unbelted test.* Place a Part 572 Subpart O 5th percentile adult female test dummy at each front outboard seating position of a vehicle, in accordance with procedures specified in S16.3 of this standard, except S16.3.5. Impact the vehicle traveling longitudinally forward at any speed, from 29 km/h (18 mph) to 48 km/h (30 mph), inclusive, into a fixed rigid barrier that is perpendicular within a tolerance of ±5 degrees to the line of travel of the vehicle under the applicable conditions of S16.2 of this standard. The test dummies shall meet the injury criteria specified in S15.3 of this standard.

S16.2 *Test conditions.*

S16.2.1 The vehicle, including test devices and instrumentation, is loaded as in S8.1.1.

S16.2.2 Movable vehicle windows and vents are placed in the fully closed position, unless the vehicle manufacturer chooses to specify a different adjustment position prior to the time the vehicle is certified.

S16.2.3 Convertibles and open-body type vehicles have the top, if any, in place in the closed passenger compartment configuration.

S16.2.4 Doors are fully closed and latched but not locked.

S16.2.5 The dummy is clothed in form fitting cotton stretch garments with short sleeves and above the knee length pants. A size 8W shoe which meets the configuration and size specifications of MIL-S 13912 change ''P'' or its equivalent is placed on each foot of the test dummy.

S16.2.6 Limb joints are set at 1 g, barely restraining the weight of the limb when extended horizontally. Leg joints are adjusted with the torso in the supine position.

S16.2.7 Instrumentation shall not affect the motion of dummies during impact.

S16.2.8 The stabilized temperature of the dummy is at any level between 20° C and 22° C (68° F to 71.6° F).

S16.2.9 *Steering wheel adjustment.*

S16.2.9.1 Adjust a tiltable steering wheel, if possible, so that the steering wheel hub is at the geometric center when moved through its full range of driving positions.

S16.2.9.2 If there is no setting detent at the mid position, lower the steering wheel to the detent just below the mid position.

S16.2.9.3 If the steering column is telescoping, place the steering column as close as possible to the mid position.

S16.2.10 *Pedal adjustment.* If pedals can be adjusted, adjust them to the full rear position (towards the rear of the vehicle) or until the pedal makes contact with the feet as defined in S16.3.2.3.

S16.2.11 *Driver and passenger seat set-up.*

S16.2.11.1 *Seat position adjustment.*

S16.2.11.1.1 If a seat is adjustable in the fore and aft and/or vertical directions, move the seat to the forwardmost seat track position and full down vertical position.

S16.2.11.1.2 Establish a reference line on the seat pan in a horizontal plane.

S16.2.11.1.3 Measure and record the seat pan angle with respect to the reference line established in S16.2.11.1.2.

S16.2.11.1.4 Adjust the seat vertically to the mid-height position. If

possible, maintain the seat pan reference angle measured in the full down and full forward condition in S16.2.11.1.3.

S16.2.11.2 *Lumbar support adjustment.* Position adjustable lumbar supports so that the lumbar support is in its lowest, retracted or deflated adjustment position.

S16.2.11.3 *Side bolster adjustment.* Position adjustable seat cushion or seat back side bolsters so that they are in the lowest or most open adjustment position.

S16.3 *Dummy seating positioning procedures.* The Part 572 Subpart O 5th percentile adult female test dummy is positioned as follows.

S16.3.1 *General provisions and definitions.*

S16.3.1.1 All angles are measured with respect to the horizontal plane.

S16.3.1.2 The dummy's neck bracket is adjusted to align the zero degree index marks.

S16.3.1.3 The term ''midsagittal plane'' refers to the vertical plane that separates the dummy into equal left and right halves.

S16.3.1.4 The term ''vertical longitudinal plane'' refers to a vertical plane parallel to the vehicle's longitudinal centerline.

S16.3.1.5 The term ''vertical plane'' refers to a vertical plane, not necessarily parallel to the vehicle's longitudinal centerline.

S16.3.1.6 The term ''transverse instrumentation platform'' refers to the transverse instrumentation surface inside the dummy's skull casting to which the neck load cell mounts. This surface is perpendicular to the skull cap machined inferior superior mounting surface.

S16.3.1.7. The term ''thigh'' refers to the femur between, but not including, the knee and the pelvis.

S16.3.1.8 The term ''leg'' refers to the lower part of the entire leg including the knee.

S16.3.2 *Driver dummy positioning.*

S16.3.2.1 *Driver torso/head/seat back angle positioning.*

S16.3.2.1.1 Fully recline the seat back, if adjustable.

S16.3.2.1.2 Install the dummy into the driver's seat. If necessary, move the seat rearward to facilitate dummy installation. If the seat cushion angle automatically changes as the seat is moved from the full forward position, restore the correct seat cushion angle when measuring the pelvic angle as specified in S16.3.2.1.11.

S16.3.2.1.3 *Bucket seats.* Center the dummy on the seat cushion so that its midsagittal plane is vertical and coincides with the longitudinal center of the seat cushion.

S16.3.2.1.4 *Bench seats.* Position the midsagittal plane of the dummy vertical and parallel to the vehicle's longitudinal centerline and aligned with the center of the steering wheel rim.

S16.3.2.1.5 Hold the dummy's thighs down and push rearward on the upper torso until the dummy's pelvic angle measures 30–35 degrees. If it is not possible to achieve a pelvic angle of at least 30 degrees, maximize the dummy's pelvic angle.

S16.3.2.1.6 Place the legs at 90 degrees to the thighs. Push rearward on the dummy's knees to force the pelvis into the seat so there is no gap between the pelvis and the seat back or until contact occurs between the back of the dummy's calves and the front of the seat cushion such that the angle between the dummy's thighs and legs begins to change.

S16.3.2.1.7 Gently rock the upper torso relative to the lower torso laterally in a side to side motion three times through a ± 5 degree arc (approximately 51 mm (2 inches) side to side) to reduce friction between the dummy and the seat.

S16.3.2.1.8 Before proceeding, make sure that the seat has been returned to the full forward position if it has been moved from that location as specified in S16.3.2.1.2. Adjust legs if required.

S16.3.2.1.9 While holding the thighs in place, rotate the seat back forward until the transverse instrumentation platform of the head is level to within ± 0.5 degrees, making sure that the pelvis does not interfere with the seat bight. In addition, inspect the abdomen to insure that it is properly installed.

S16.3.2.1.10 If it is not possible to achieve the head level within ± 0.5 degrees, minimize the angle and continue to S16.3.2.1.11.

S16.3.2.1.11 Measure and set the dummy's pelvic angle using the pelvic angle gage (drawing TE–2504, incorporated by reference in Part 572, subpart O, of this chapter). The angle shall be set to within 20.0 degrees ± 2.5 degrees. If this is not possible, adjust the pelvic angle as close to 20.0 degrees ± 2.5 degrees as possible while keeping the transverse instrumentation platform of the head as level as possible as specified in S16.3.2.1.9 and S16.3.2.1.10.

S16.3.2.1.12. If the transverse instrumentation platform of the head is still not level, adjust the seat back angle to minimize the angle as much as possible.

S16.3.2.1.13 In vehicles with a fixed seat back, the lower neck bracket can be adjusted to level the head within ± 0.5 degrees or to minimize the angle as much as possible.

S16.3.2.2 *Driver thigh/knee/leg positioning.*

S16.3.2.2.1 Rest the dummy's thighs against the seat cushion to the extent permitted by the placement of the feet in S16.3.2.3.

S16.3.2.2.2 Set the initial transverse distance between the longitudinal centerline of the dummy's thighs at the knees at 160 to 170 mm (6.3 to 6.7 inches), with the thighs and legs of the dummy in vertical longitudinal planes.

S16.3.2.2.3. Move the dummy's right foot to the accelerator pedal by rotating the entire right thigh and leg at the dummy's hip joint while maintaining the dummy's torso setting.

S16.3.2.2.4 If either knee of the dummy is in contact with the vehicle interior, translate the thigh(s) and leg(s) at the hip joint inboard or outboard with respect to the dummy midsagittal plane until no contact occurs while maintaining the thigh and leg in a vertical plane.

S16.3.2.2.5 If contact still occurs, rotate the thigh(s) and leg(s) laterally at the hip joint with respect to the dummy midsagittal plane so that it is no longer in the vertical plane and no contact occurs.

S16.3.2.3 *Driver feet positioning.*

S16.3.2.3.1 Rest the right foot of the dummy on the undepressed accelerator pedal with the rearmost point of the heel on the floor pan in the plane of the pedal.

S16.3.2.3.2 If the ball of the foot does not contact the pedal, change the angle of the foot relative to the leg such that the toe of the foot contacts the undepressed accelerator pedal.

S16.3.2.3.3 If the foot still cannot contact the undepressed accelerator pedal, place the toe of the foot as close as possible to the pedal.

S16.3.2.3.4 Place the left foot on the toe board with the rearmost point of the heel resting on the floor pan as close as possible to the point of intersection of the planes described by the toe board and the floor pan.

S16.3.2.3.5 If the left foot cannot be positioned on the toe board, place the foot flat on the floor pan as far forward as possible.

S16.3.2.3.6 If the left foot does not contact the floor pan, place the foot parallel to the floor and place the leg as perpendicular to the thigh as possible.

S16.3.2.4 *Driver arm/hand positioning.*

S16.3.2.4.1 Place the dummy's upper arm adjacent to the torso with the arm centerlines as close to vertical as possible.

S16.3.2.4.2 Place the palms of the dummy in contact with the outer part of the steering wheel rim at its horizontal

centerline with the thumbs inside the steering wheel rim.

S16.3.2.4.3 If it is not possible to position the thumbs inside the steering wheel rim at its horizontal centerline, then position them above and as close to the horizontal centerline of the steering wheel rim as possible.

S16.3.2.4.4 Lightly tape the hands to the steering wheel rim so that if the hand of the test dummy is pushed upward by a force of not less than 9 N (2 pounds) and not more than 22 N (5 pounds), the tape releases the hand from the steering wheel rim.

S16.3.3 *Passenger dummy positioning.*

S16.3.3.1 *Passenger torso/head/seat back angle positioning.*

S16.3.3.1.1 Fully recline the seat back, if adjustable.

S16.3.3.1.2 Install the dummy into the passenger's seat. If necessary, move the seat rearward to facilitate dummy installation. If the seat cushion angle automatically changes as the seat is moved from the full forward position, restore the correct seat cushion angle when measuring the pelvic angle in S16.3.3.1.11.

S16.3.3.1.3 *Bucket seats.* Center the dummy on the seat cushion so that its midsagittal plane is vertical and coincides with the longitudinal center of the seat cushion.

S16.3.3.1.4 *Bench seats.* The midsagittal plane shall be vertical and parallel to the vehicle's longitudinal centerline and the same distance from the vehicle's longitudinal centerline as the midsaggital plane of the driver dummy.

S16.3.3.1.5 Hold the dummy's thighs down and push rearward on the upper torso until the dummy's pelvic angle measures 30–35 degrees. If it is not possible to achieve a pelvic angle of at least 30 degrees, maximize the dummy's pelvic angle.

S16.3.3.1.6 Place the legs at 90 degrees to the thighs. Push rearward on the dummy's knees to force the pelvis into the seat so there is no gap between the pelvis and the seat back or until contact occurs between the back of the dummy's calves and the front of the seat cushion such that the angle of the dummy's legs begins to change.

S16.3.3.1.7 Gently rock the upper torso relative to the lower torso laterally side to side three times through a ± 5 degree arc (approximately 51 mm (2 inches) side to side) to reduce friction between the dummy and the seat.

S16.3.3.1.8 Before proceeding, make sure that the seat has been returned to the full forward position if it had been moved from that location as specified in S16.3.3.1.2.

S16.3.3.1.9 While holding the thighs in place, rotate the seat back forward until the transverse instrumentation platform of the head is level to within ± 0.5 degrees, making sure that the pelvis does not interfere with the seat bite. In addition, inspect the abdomen to insure that it is properly installed.

S16.3.3.1.10 If it is not possible to achieve the head level within ± 0.5 degrees, minimize the angle and continue to S16.3.3.1.11.

S16.3.3.1.11 Measure and set the dummy's pelvic angle using the pelvic angle gage (drawing TE–2504, incorporated by reference in Part 572, Subpart O, of this chapter). The angle shall be set within 20.0 degrees ± 2.5 degrees. If this is not possible, adjust the pelvic angle as close to 20.0 degrees ± 2.5 degrees as possible while keeping the transverse instrumentation platform of the head as level as specified in S16.3.3.1.9 and S16.3.3.1.10.

S16.3.3.1.12 If the transverse instrumentation platform of the head is still not level, adjust the seat back angle to minimize the angle as much as possible.

S16.3.3.1.13 In vehicles with a fixed seat back, the lower neck bracket can be adjusted to level the head within ± 0.5 degrees or to minimize the angle as much as possible.

S16.3.3.2 *Passenger thigh/knee/leg positioning.*

S16.3.3.2.1 Rest the dummy's thighs against the seat cushion to the extent permitted by the placement of the feet in S16.3.3.3.

S16.3.3.2.2 Set the initial transverse distance between the longitudinal centerline of the dummy's thighs at the knees at 160 to 170 mm (6.3 to 6.7 inches), with the thighs and legs of the dummy in vertical longitudinal planes.

S16.3.3.2.3 If either knee of the dummy is in contact with the vehicle interior translate the thigh(s) and leg(s) at the hip joint inboard or outboard with respect to the dummy midsagittal plane until no contact occurs while maintaining the thigh and leg in a vertical plane.

S16.3.3.2.4 If contact still occurs, rotate the thigh(s) and leg(s) laterally at the hip joint with respect to the dummy midsagittal plane so that it is no longer in the vertical plane and no contact occurs.

S16.3.3.3 *Passenger feet positioning.*

S16.3.3.3.1 Place the passenger's feet flat on the floor pan as far forward as possible.

S16.3.3.3.2 If either foot does not entirely contact the floor pan, place the foot parallel to the floor and place the legs as perpendicular to the thighs as possible.

S16.3.3.4 *Passenger arm/hand positioning.*

S16.3.3.4.1 Place the dummy's upper arms in contact with the upper seat back and adjacent to the torso.

S16.3.3.4.2 Place the palms of the dummy in contact with the outside of the thigh.

S16.3.3.4.3 Place the little fingers in contact with the seat cushion.

S16.3.4 *Driver and passenger head restraint adjustment.*

S16.3.4.1. Place each adjustable head restraint so that the vertical center of the head restraint is aligned with the center of gravity (CG) of the dummy head.

S16.3.4.2 If the above position is not attainable, move the vertical center of the head restraint to the closest detent below the center of the head CG.

S16.3.4.3 If the head restraint has a fore and aft adjustment, place the restraint in the forwardmost position or until contact with the head is made.

S16.3.4.4 If the head restraint has an automatic adjustment, leave it where the system positions the restraint after the dummy is placed in the seat.

S16.3.5 *Driver and passenger manual belt adjustment (This applies only for tests conducted with a belted dummy.)*

S16.3.5.1 If an adjustable seat belt D-ring anchorage exists, place it in the full down position.

S16.3.5.2 Place the Type 2 manual belt around the test dummy and fasten the latch.

S16.3.5.3 Ensure that the dummy's head remains as level as possible, as specified in S16.3.2.1.9 and S16.3.2.1.10.

S16.3.5.4 Remove all slack from the lap belt. Pull the upper torso webbing out of the retractor and allow it to retract; repeat this operation four times. Apply a 9 N (2 pound force) to 18 N (4 pound force) tension load to the lap belt. If the belt system is equipped with a tension-relieving device, introduce the maximum amount of slack into the upper torso belt that is recommended by the manufacturer in the owner's manual for the vehicle. If the belt system is not equipped with a tension-relieving device, allow the excess webbing in the shoulder belt to be retracted by the retractive force of the retractor.

S17 *Offset frontal deformable barrier requirements using 5th percentile adult female dummies.*

S17.1 Each vehicle subject to S17 of this standard shall, at each front outboard designated seating position, meet the injury criteria specified in S15.3 of this standard when the vehicle

is crash tested in accordance with the procedures specified in S18.1(a) of this standard with the Part 572 Subpart O 5th percentile adult female test dummy restrained by a Type 2 seat belt assembly. A vehicle shall not be deemed to be in noncompliance with this paragraph if its manufacturer establishes that it did not have reason to know in the exercise of due care that such vehicle is not in conformity with the requirements of this paragraph.

S17.2 Each vehicle subject to S17 of this standard shall, at each front outboard designated seating position, meet the injury criteria specified in S15.3 of this standard when the vehicle is crash tested in accordance with the procedures specified in S18.1(b) of this standard with the dummy unbelted. A vehicle shall not be deemed to be in noncompliance with this paragraph if its manufacturer establishes that it did not have reason to know in the exercise of due care that such vehicle is not in conformity with the requirements of this paragraph.

S18 *Test procedure for offset frontal deformable barrier requirements using 5th percentile adult female dummies.*

S18.1 *General provisions.* Crash testing to determine compliance with the requirements of S17 of this standard is conducted as specified in the following paragraphs (a) and (b).

(a) *Belted test.* Place a Part 572 Subpart O 5th percentile adult female test dummy at each front outboard seating position of a vehicle, in accordance with procedures specified in S16.3 of this standard, including S16.3.5. Impact the vehicle traveling longitudinally forward at any speed, up to and including 40 km/h (25 mph), into a fixed offset deformable barrier under the conditions specified in S18.2 of this standard, impacting only the driver side of the vehicle. The dummies shall meet the injury criteria specified in S15.3 of this standard.

(b) *Unbelted test.* Place a Part 572 Subpart O 5th percentile adult female test dummy at each front outboard seating position of a vehicle, in accordance with procedures specified in S16.3 of this standard, but not including S16.3.5. Impact the vehicle traveling longitudinally forward at any speed, from 35.4 km/h (22 mph) to 56 km/h (35 mph), inclusive, into a fixed offset deformable barrier under the conditions specified in S18.2 of this standard. The dummies shall meet the injury criteria specified in S15.3 of this standard.

S18.2 *Test conditions.*

S18.2.1 *Offset frontal deformable barrier.* The offset frontal deformable barrier shall conform to the specifications set forth in Subpart B of Part 587 of this chapter.

S18.2.2 *General test conditions.* All of the test conditions specified in S16.2 of this standard apply.

S18.2.3 *Dummy seating procedures.* Position the anthropomorphic test dummies as specified in S16.3 of this standard.

S18.2.4 *Impact configuration.* The test vehicle shall impact the barrier with the longitudinal line of the vehicle parallel to the line of travel and perpendicular to the barrier face. The test vehicle shall be aligned so that the vehicle strikes the barrier with 40 percent overlap on either the left or right side of the vehicle, with the vehicle's width engaging the barrier face such that the vehicle's longitudinal centerline is offset outboard of the edge of the barrier face by 10 percent of the vehicle's width +/−25 mm (1.0 inch) as illustrated in Figure 10. The vehicle width is defined as the maximum dimension measured across the widest part of the vehicle, including bumpers and molding but excluding such components as exterior mirrors, flexible mud flaps, marker lamps, and dual rear wheel configurations.

S19 *Requirements to provide protection for infants in rear facing child restraints.*

S19.1 Each vehicle shall, at the option of the manufacturer, meet the requirements specified in S19.2 or S19.3, under the test procedures specified in S20.

S19.2 *Option 1—Automatic suppression feature.* Each vehicle shall meet the requirements specified in S19.2.1 through S19.2.2.

S19.2.1 The vehicle shall be equipped with an automatic suppression feature for the passenger air bag which results in deactivation of the air bag during each of the static tests specified in S20.2 (using the Part 572 Subpart R 12-month-old CRABI child dummy restrained in any of the child restraints set forth in sections B and C of Appendix A to this section), and activation of the air bag during each of the static tests specified in S20.3 (using the Part 572 Subpart O 5th percentile Hybrid III adult female dummy).

S19.2.2 The vehicle shall be equipped with a mechanism that indicates whether the occupant restraint system is suppressed. The mechanism need not be located in the occupant compartment.

S19.2.3 The vehicle shall be equipped with a telltale light on the instrument panel which is illuminated whenever the passenger air bag is deactivated and not illuminated whenever the passenger air bag is activated, except that the telltale need not illuminate when the passenger seat is unoccupied. The telltale:

(a) Shall be clearly visible from all front seating positions;

(b) Shall be yellow;

(c) Shall have the identifying words ''PASSENGER AIR BAG OFF'' on the telltale or within 25 mm (1.0 inch) of the telltale; and

(d) Shall not be combined with the readiness indicator required by S4.5.2 of this standard.

S19.3 *Option 2—Low risk deployment.* Each vehicle shall meet the injury criteria specified in S19.4 of this standard when the passenger air bag is statically deployed in accordance with the procedures specified in S20.4 of this standard.

S19.4 *Injury criteria (12-month-old CRABI dummy).*

S19.4.1 All portions of the test dummy and child restraint shall be contained within the outer surfaces of the vehicle passenger compartment.

S19.4.2 The resultant acceleration at the center of gravity of the head shall be such that the expression:

$$\left[\frac{1}{(t_2 - t_1)}\int_{t_1}^{t_2} a\,dt\right]^{2.5}(t_2 - t_1)$$

shall not exceed 390 where a is the resultant acceleration expressed as a multiple of g (the acceleration of gravity), and t_1 and t_2 are any two points in time during the crash of the vehicle which are separated by not more than a 15 millisecond time interval.

S19.4.3 The resultant acceleration calculated from the output of the thoracic instrumentation shown in drawing [a drawing incorporated by reference in Part 572 would be identified in the final rule] shall not exceed 50 g's, except for intervals whose cumulative duration is not more than 3 milliseconds.

S19.4.4 The biomechanical neck injury predictor, Nij, shall not exceed a value of 1.0 at any point in time. The following procedure shall be used to compute Nij. The axial force (Fz) and flexion/extension moment about the occipital condyles (My) shall be used to calculate four combined injury predictors, collectively referred to as Nij. These four combined values represent the probability of sustaining each of four primary types of cervical injuries; namely tension-extension (N_{TE}), tension-flexion (N_{TF}), compression-extension (N_{CE}), and compression-flexion (N_{CF}) injuries. Axial force shall be filtered at SAE class 1000 and flexion/extension moment (My) shall be filtered at SAE class 600.

Shear force, which shall be filtered at SAE class 600, is used only in conjunction with the measured moment to calculate the effective moment at the location of the occipital condyles. The equation for calculating the Nij criteria is given by:

Nij = (Fz/Fzc) + (My/Myc)

where Fzc and Myc are critical values corresponding to:

Fzc = 1465 N (329 lbf) for tension
Fzc = 1465 N (329 lbf) for compression
Myc = 43 Nm (32 lbf-ft) for flexion about occipital condyles
Myc = 17 Nm (13 lbf-ft) for extension about occipital condyles

Each of the four Nij values shall be calculated at each point in time, and all four values shall not exceed 1.0 at any point in time. When calculating N_{TE} and N_{TF}, all compressive loads shall be set to zero. Similarly, when calculating N_{CE} and N_{CF}, all tensile loads shall be set to zero. In a similar fashion, when calculating N_{TE} and N_{CE}, all flexion moments shall be set to zero. Likewise, when calculating N_{TF} and N_{CF}, all extension moments shall be set to zero.

S19.4.5 *Test duration for purpose of measuring injury criteria.* For tests conducted pursuant to S20.4, the injury criteria shall be met up to 100 milliseconds after the air bag deploys.

S20 *Test procedure for S19.*

S20.1 *General provisions.* Tests specifying the use of a rear facing child restraint, a convertible child restraint, or car bed may be conducted using any such restraint listed in sections A, B, and C of Appendix A of this standard. The rear facing child restraint, convertible child restraint, or car bed may be unused or used; if used, there must not be any visible damage prior to the test.

S20.2 *Static tests of automatic suppression feature which must result in deactivation of the passenger air bag.*

S20.2.1 *Test one—belted rear facing and convertible child restraints.*

S20.2.1.1 Position the right front passenger vehicle seat at any seat track location, at any seat height, and at any seat back angle between the manufacturer's nominal design position for the 50th percentile adult male as specified in S8.1.3 and an additional 25 degrees in the rearward direction (inclusive).

S20.2.1.2 Tests in S20.2.1 may be conducted using any child restraint specified in section B or section C of Appendix A.

S20.2.1.3 If the child restraint is equipped with a handle, tests may be conducted with the handle at either the child restraint manufacturer's recommended position for use in vehicles or in the upright position.

S20.2.1.4 If the child restraint is equipped with a sunshield, tests may be conducted with the sunshield either fully open or fully closed.

S20.2.1.5 Tests may be conducted with the child restraint uncovered or with a towel or blanket weighing up to 1.0 kg (2.2 pounds) placed on or over the child restraint in any of the following positions:

(a) With the blanket covering the top and sides of the child restraint, or

(b) With the blanket placed from the top of the vehicle's seat back to the forwardmost edge of the child restraint.

S20.2.1.6 Locate a vertical plane through the longitudinal centerline of the child restraint. This will be referred to as ''Plane A''.

S20.2.1.7 Locate a vertical plane parallel to the vehicle longitudinal centerline through the geometric center of the right front passenger vehicle seat pan. This will be referred to as ''Plane B''. For vehicles with bench seats, locate a vertical plane parallel to the vehicle longitudinal centerline through the geometric center of the air bag cover. This will be referred to as ''Plane B''.

S20.2.1.8 *Facing rear.*

(a) Align the child restraint system facing rearward such that ''Plane A'' is aligned with ''Plane B''.

(b) While maintaining the child restraint position achieved in S20.2.1.8(a), secure the child restraint by following, to the extent possible, the child restraint manufacturer's directions regarding proper installation of the restraint in the rear facing mode.

(c) Cinch the vehicle belts to secure the child restraint in accordance with the procedures specified in Standard No. 213, except that any tension from zero up to 134 N (30 pounds) may be used.

(d) Position the Part 572 Subpart R 12-month-old CRABI dummy in the child restraint by following, to the extent possible, the manufacturer's instructions for seating infants provided with the child restraint.

(e) Start the vehicle engine and close all vehicle doors. Check whether the air bag is deactivated.

S20.2.1.9 *Facing forward (convertible restraints only*).

(a) Align the child restraint system facing forward such that ''Plane A'' is aligned with ''Plane B''.

(b) While maintaining the forward facing position achieved in S20.2.1.9(a), secure the child restraint by following, to the extent possible, the child restraint manufacturer's directions regarding proper installation of the restraint in the forward facing mode.

(c) Cinch the vehicle belts to secure the child restraint in accordance with the procedures specified in Standard No. 213, except that any tension from zero up to 134 N (30 pounds) may be used.

(d) Position the Part 572 Subpart R 12-month-old CRABI dummy in the child restraint by following, to the extent possible, the manufacturer's instructions for seating infants provided with the child restraint.

(e) Start the vehicle engine and close all vehicle doors. Check whether the air bag is deactivated.

S20.2.2 *Test two—unbelted rear facing and convertible child restraints.*

S20.2.2.1 Position the right front passenger vehicle seat at any seat track location, at any seat height, and at any seat back angle between the manufacturer's nominal design position for the 50th percentile adult male as specified in S8.1.3 and an additional 25 degrees in the rearward direction (inclusive).

S20.2.2.2 Tests in S20.2.2 may be conducted using any child restraint specified in section B or section C of Appendix A to this section.

S20.2.2.3 If the child restraint is equipped with a handle, tests may be conducted with the handle at either the child restraint manufacturer's recommended position for use in vehicles or in the upright position.

S20.2.2.4 If the child restraint is equipped with a sunshield, tests may be conducted with the sunshield either fully open or fully closed.

S20.2.2.5 Tests may be conducted with the child restraint uncovered or with a towel or blanket weighing up to 1.0 kg (2.2 pounds) placed on or over the child restraint in any of the following positions:

(a) With the blanket covering the top and sides of the child restraint, or

(b) With the blanket placed from the top of the vehicle's seat back to the forwardmost edge of the child restraint.

S20.2.2.6 Locate a vertical plane through the longitudinal centerline of the child restraint. This will be referred to as ''Plane A''.

S20.2.2.7 Locate a vertical plane parallel to the vehicle longitudinal centerline through the geometric center of the right front passenger vehicle seat pan. This will be referred to as ''Plane B''. For vehicles with bench seats, locate a vertical plane parallel to the vehicle longitudinal centerline through the geometric center of the air bag cover. This will be referred to as ''Plane B''.

S20.2.2.8 *Facing rear.*

(a) Align the child restraint system facing rearward such that ''Plane A'' is aligned with ''Plane B'' and adjust the forwardmost part of the child restraint

in ''Plane A'' at any angle up to 45 degrees from ''Plane B''.

(b) Position the Part 572 Subpart R 12-month-old CRABI dummy in the child restraint by following, to the extent possible, the manufacturer's instructions for seating infants provided with the child restraint.

(c) Start the vehicle engine and close all vehicle doors. Check whether the air bag is deactivated.

S20.2.2.9 *Facing forward.*

(a) Align the child restraint system facing forward such that ''Plane A'' is aligned with ''Plane B'' and adjust the forwardmost part of the child restraint in ''Plane A'' at any angle up to 45 degrees from ''Plane B''.

(b) Position the Part 572 Subpart R 12-month-old CRABI dummy in the child restraint by following, to the extent possible, the manufacturer's instructions for seating infants provided with the child restraint.

(c) Start the vehicle engine and close all vehicle doors. Check whether the air bag is deactivated.

S20.2.2.10 *Facing forward, tipped on instrument panel (convertible child restraints only).*

(a) Align the child restraint system facing forward such that ''Plane A'' is aligned with ''Plane B''.

(b) Position the Part 572 Subpart R 12-month-old CRABI dummy in the child restraint by following, to the extent possible, the manufacturer's instructions for seating infants provided with the child restraint.

(c) Tip the rearwardmost part of the child restraint forward toward the instrument panel, while keeping the bottom portion of the child seat in contact with the vehicle seat. Position the child restraint such that it rests against the instrument panel. If the child restraint cannot reach the instrument panel and remain in contact with the vehicle seat, move the vehicle seat forward until contact can be achieved.

(d) Start the vehicle engine and close all vehicle doors. Check whether the air bag is deactivated.

S20.2.3 *Test three-belted car bed.*

S20.2.3.1 Position the right front passenger vehicle seat at any seat track location, at any seat height, and at any seat back angle between the manufacturer's nominal design position for the 50th percentile adult male as specified in S8.1.3 and an additional 25 degrees in the rearward direction (inclusive).

S20.2.3.2 Tests may be conducted using any car bed specified in section A of Appendix A.

S20.2.3.3 If the car bed is equipped with a handle, tests may be conducted with the handle at either the child restraint manufacturer's recommended position for use in vehicles or in the upright position.

S20.2.3.4 If the car bed is equipped with a sunshield, tests may be conducted with the sunshield either fully open or fully closed.

S20.2.3.5 Tests may be conducted with the car bed uncovered or with a towel or blanket weighing up to 1.0 kg (2.2 pounds) placed on or over the child restraint in any of the following positions:

(a) With the blanket covering the top and sides of the car bed, or

(b) With the blanket placed from the top of the vehicle's seat back to the forwardmost edge of the car bed.

S20.2.3.6 *Nominal position*:

(a) Install the car bed by following to the extent possible the car bed manufacturer's directions regarding proper installation of the car bed.

(b) Cinch the vehicle belts to secure the child restraint in accordance with the procedures specified in Standard No. 213, except that any tension from zero up to 134 N (30 pounds) may be used.

(c) Position the Part 572 Subpart K newborn dummy in the car bed by following, to the extent possible, the car bed manufacturer's instructions for seating infants provided with the car bed.

(d) Start the vehicle engine and close all vehicle doors. Check whether the air bag is deactivated.

S20.3 *Static tests of automatic suppression feature which must result in activation of the passenger air bag.*

S20.3.1 Place the right front passenger vehicle seat at any seat track location, any seat height, and any seat back angle between the manufacturer's nominal design position for the 50th percentile adult male as specified in S8.1.3 and an additional 25 degrees in the rearward direction (inclusive).

S20.3.2 Place a Part 572 Subpart O 5th percentile adult female test dummy at the right front seating position of the vehicle, in accordance with procedures specified in S16.3 of this standard, to the extent possible with the seat position that has been selected pursuant to S20.3.1.

S20.3.3 Start the vehicle engine and then close all vehicle doors.

S20.3.4 Check whether the air bag is activated.

S20.4 *Low risk deployment test.*

S20.4.1 Position the right front passenger vehicle seat in the full forward seat track position, the highest seat position (if adjustment is available), and adjust the seat back to the nominal design position for a 50th percentile adult male dummy as specified by the vehicle manufacturer.

S20.4.2 Tests in S20.4 may be conducted using any child restraint specified in section B or section C of Appendix A.

S20.4.3 Locate a vertical plane through the longitudinal centerline of the child restraint. This will be referred to as ''Plane A''.

S20.4.4 Locate a vertical plane parallel to the vehicle longitudinal centerline through the geometric center of the air bag cover. This will be referred to as ''Plane B''.

S20.4.4 Align the child restraint system facing rearward such that ''Plane A'' is aligned with ''Plane B''.

S20.4.5 While maintaining the child restraint position achieved in S20.4.4, secure the child restraint by following, to the extent possible, the child restraint manufacturer's directions regarding proper installation of the restraint in the rear facing mode.

S20.4.6 Position the Part 572 subpart R 12-month-old CRABI dummy in the child restraint by following, to the extent possible, the manufacturer's instructions for seating infants provided with the child restraint.

S20.4.7 Deploy the right front passenger air bag system. If the air bag contains a multistage inflator, any stage or combination of stages may be fired that could deploy in the presence of an infant in a rear-facing child restraint positioned according to S20.2.1 or S20.2.2 in a rigid barrier crash test at speeds up to 64 km/h (40 mph).

S21 *Requirements using 3 year old child dummies.*

S21.1 Each vehicle shall, at the option of the manufacturer, meet the requirements specified in S21.2, S21.3, or S21.4 under the test procedures specified in S22.

S21.2 *Option 1—Automatic suppression feature that always suppresses the air bag when a child is present.* Each vehicle shall meet the requirements specified in S21.2.1 through S21.2.2.

S21.2.1 The vehicle shall be equipped with an automatic suppression feature for the passenger air bag which results in deactivation of the air bag during each of the static tests specified in S22.2 (using a child or a Part 572 Subpart P Hybrid III 3-year-old child dummy), and activation of the air bag during each of the static tests specified in S20.3 (using a female or a Part 572 Subpart O Hybrid III 5th percentile adult female dummy).

S21.2.2 The vehicle shall be equipped with a mechanism that indicates whether the occupant restraint system is suppressed. The mechanism

need not be located in the occupant compartment.

S21.2.3 The vehicle shall be equipped with a telltale light on the instrument panel meeting the requirements specified in S19.2.3.

S21.3 *Option 2—Dynamic automatic suppression system that suppresses the air bag when an occupant is out of position.* (This option is available under the conditions set forth in S27.1.) The vehicle shall be equipped with a dynamic automatic suppression system for the passenger air bag which meets the requirements specified in S27.

S21.4 *Option 3—Low risk deployment.* Each vehicle shall meet the injury criteria specified in S21.5 of this standard when the passenger air bag is statically deployed in accordance with the low risk deployment test procedures specified in S22.3.

S21.5 *Injury criteria for Hybrid III 3-year-old child dummy.*

S21.5.1 All portions of the test dummy shall be contained within the outer surfaces of the vehicle passenger compartment.

S21.5.2 The resultant acceleration at the center of gravity of the head shall be such that the expression:

$$\left[\frac{1}{(t_2 - t_1)}\int_{t_1}^{t_2} a\,dt\right]^{2.5}(t_2 - t_1)$$

shall not exceed 570 where a is the resultant acceleration expressed as a multiple of g (the acceleration of gravity), and t_1 and t_2 are any two points in time during the crash of the vehicle which are separated by not more than a 15 millisecond time interval.

S21.5.3 The resultant acceleration calculated from the output of the thoracic instrumentation shown in drawing [a drawing incorporated by reference in Part 572 would be identified in the final rule] shall not exceed 55 g's, except for intervals whose cumulative duration is not more than 3 milliseconds.

S21.5.4 Compression deflection of the sternum relative to the spine, as determined by instrumentation shown in drawing [a drawing incorporated by reference in Part 572 would be identified in the final rule] shall not exceed 34 millimeters (1.3 inches).

S21.5.5 The biomechanical neck injury predictor, Nij, shall not exceed a value of 1.0 at any point in time. The following procedure shall be used to compute Nij. The axial force (Fz) and flexion/extension moment about the occipital condyles (My) shall be used to calculate four combined injury predictors, collectively referred to as Nij. These four combined values represent the probability of sustaining each of four primary types of cervical injuries; namely tension-extension (N_{TE}), tension-flexion (N_{TF}), compression-extension (N_{CE}), and compression-flexion (N_{CF}) injuries. Axial force shall be filtered at SAE class 1000 and flexion/extension moment (My) shall be filtered at SAE class 600. Shear force, which shall be filtered at SAE class 600, is used only in conjunction with the measured moment to calculate the effective moment at the location of the occipital condyles. The equation for calculating the Nij criteria is given by:

Nij=(Fz/Fzc)+(My/Myc)

where Fzc and Myc are critical values corresponding to:

Fzc=2120 N (477 lbf) for tension
Fzc=2120 N (477 lbf) for compression
Myc=68 Nm (50 lbf-ft) for flexion about occipital condyles
Myc=27 Nm (20 lbf-ft) for extension about occipital condyles

Each of the four Nij values shall be calculated at each point in time, and all four values shall not exceed 1.0 at any point in time. When calculating N_{TE} and N_{TF}, all compressive loads shall be set to zero. Similarly, when calculating N_{CE} and N_{CF}, all tensile loads shall be set to zero. In a similar fashion, when calculating N_{TE} and N_{CE}, all flexion moments shall be set to zero. Likewise, when calculating N_{TF} and N_{CF}, all extension moments shall be set to zero.

S21.5.5 *Test duration for purpose of measuring injury criteria.* For tests conducted pursuant to S22.3, the injury criteria shall be met up to 100 milliseconds after the air bag deploys.

S22 *Test procedure for S21.*

S22.1 *General provisions and definitions.*

S22.1.1 Tests specifying the use of a forward-facing child seat or booster seat may be conducted using any such seat listed in section C and section D of Appendix A of this standard. The child restraint may be unused or used; if used, there must not be any visible damage prior to the test.

S22.1.2 The definitions provided in S16.3.1 apply to the tests specified in S22.

S22.2 *Static tests of automatic suppression feature which must result in deactivation of the passenger air bag when a child is present.*

S22.2.1 *Test one—child in a forward-facing child seat or booster seat.*

S22.2.1.1 Position the right front passenger vehicle seat at any seat track location, at any seat height, and at any seat back angle between the manufacturer's nominal design position for the 50th percentile adult male as specified in S8.1.3.

S22.2.1.2 Install the forward-facing child seat or booster seat in the right front passenger seat in accordance, to the extent possible, with the child restraint manufacturer's instructions provided with the seat.

S22.2.1.3 Cinch the vehicle belts to secure the child restraint in accordance with the procedures specified in Standard No. 213, except that any tension from zero up to 134 N (30 pounds) may be used.

S22.2.1.4 Position the Part 572 Subpart P Hybrid III 3-year-old child dummy seated in the forward-facing child seat or booster seat such that the dummy's lower torso is centered on the forward-facing child seat or booster seat cushion and the dummy's spine is parallel to the forward-facing child seat or booster seat back or, if there is no booster seat back, the vehicle seat back. Place the lower arms at the dummy's side.

S22.2.1.5 Attach all appropriate forward-facing child seat or booster seat belts, if any, by following, to the extent possible, the manufacturer's instructions for seating children provided with the child restraint.

S22.2.1.6 Start the vehicle engine and then close all vehicle doors.

S22.2.1.7 Check whether the air bag is deactivated.

S22.2.2 *Test two—unbelted child.*

S22.2.2.1 Position the right front passenger vehicle seat at any seat track location, at any seat height, and at any seat back angle between the manufacturer's nominal design position for the 50th percentile adult male as specified in S8.1.3.

S22.2.2.2 Place the Part 572 Hybrid III 3-year old child dummy on the right front passenger seat in any of the following positions (without using a forward-facing child restraint or booster seat or the vehicle's seat belts):

(a) *Sitting on seat with back against seat.*

(1) Position the dummy in the seated position and place it on the right front passenger seat.

(2) Position the upper torso of the dummy against the seat back. In the case of vehicles equipped with bench seats, position the midsagittal plane of the dummy vertically and parallel to the vehicle's longitudinal centerline and the same distance from the vehicle's longitudinal centerline as the center of the steering wheel rim. In the case of vehicles equipped with bucket seats, position the midsagittal plane of the dummy vertically such that it coincides with the longitudinal centerline of the

bucket seat. Position the dummy's thighs against the seat cushion.

(3) Allow the legs of the dummy to extend off the surface of the seat. If this positioning of the dummy's legs is prevented by contact with the instrument panel, rotate the leg toward the floor until there is no contact with the instrument panel.

(4) Rotate the dummy's upper arms down until they contact the seat.

(5) Rotate the dummy's lower arms until the dummy's hands contact the seat.

(6) Start the vehicle engine and then close all vehicle doors.

(7) Check whether the air bag is deactivated.

(b) *Sitting on seat with back not against seat:*

(1) Position the dummy in the seated position and place it on the right front passenger seat.

(2) In the case of vehicles equipped with bench seats, position the midsagittal plane of the dummy vertically and parallel to the vehicle's longitudinal centerline and the same distance from the vehicle's longitudinal centerline as the center of the steering wheel rim. In the case of vehicles equipped with bucket seats, position the midsagittal plane of the dummy vertically such that it coincides with the longitudinal centerline of the bucket seat. Position the dummy so that the horizontal distance from the dummy's back to the seat back is no less than 25 mm (1 inch) and no more than 150 mm (6 inches), as measured from the dummy's mid-sagittal plane at the mid-sternum level.

(3) Position the dummy's femurs against the seat cushion.

(4) Allow the legs of the dummy to extend off the surface of the seat. If this positioning the dummy's legs is prevented by contact with the instrument panel, rotate the leg toward the floor until there is no contact with the instrument panel.

(5) Rotate the dummy's lower arms until the dummy's hands contact the seat.

(6) Start the vehicle engine and then close all vehicle doors.

(7) Check whether the air bag is deactivated.

(c) *Sitting on seat edge, spine vertical, hands by the dummy's side*:

(1) In the case of vehicles equipped with bench seats, position the midsagittal plane of the dummy vertically and parallel to the vehicle's longitudinal centerline and the same distance from the vehicle's longitudinal centerline as the center of the steering wheel rim. In the case of vehicles equipped with bucket seats, position the midsagittal plane of the dummy vertically such that it coincides with the longitudinal centerline of the bucket seat. Position the dummy in the seated position and place it on the right front passenger seat with the dummy's legs positioned 90 degrees (*i.e.*, right angle) from the horizontal.

(2) Position the dummy forward in the seat such that the legs rest against the front of the seat with the spine in the vertical direction. If the dummy's feet contact the floorboard, rotate the legs forward until the dummy is resting on the seat with the feet positioned flat on the floorboard and the dummy spine vertical.

(3) Extend the dummy's arms directly in front of the dummy parallel to the floor of the vehicle.

(4) Lower the dummy's arms such that they contact the seat.

(5) Start the vehicle engine and then close all vehicle doors.

(6) Check whether the air bag is deactivated.

(d) *Standing on seat, facing forward:*

(1) Position the dummy in the standing position. The arms may be at any position.

(2) In the case of vehicles equipped with bench seats, position the midsagittal plane of the dummy vertically and parallel to the vehicle's longitudinal centerline and the same distance from the vehicle's longitudinal centerline as the center of the steering wheel rim. In the case of vehicles equipped with bucket seats, position the midsagittal plane of the dummy vertically such that it coincides with the longitudinal centerline of the bucket seat. Position the dummy on the right front passenger seat cushion facing the front of the vehicle while placing the heels of the dummy feet in contact with the seat back.

(3) Rest the dummy against the seat back.

(4) Start the vehicle engine and then close all vehicle doors.

(5) Check whether the air bag is deactivated.

(e) *Kneeling on seat, facing forward*:

(1) Position the dummy in a kneeling position by rotating the dummy's legs 90 degrees behind the dummy (from the standing position).

(2) In the case of vehicles equipped with bench seats, position the midsagittal plane of the dummy vertically and parallel to the vehicle's longitudinal centerline and the same distance from the vehicle's longitudinal centerline as the center of the steering wheel rim. In the case of vehicles equipped with bucket seats, position the midsagittal plane of the dummy vertically such that it coincides with the longitudinal centerline of the bucket seat. Position the kneeling dummy in the right front passenger seat with the dummy facing the front of the vehicle. Position the dummy such that the dummy's toes are in contact with the seat back. The arms may be at any position.

(3) Start the vehicle engine and then close all vehicle doors.

(4) Check whether the air bag is deactivated.

(f) *Kneeling on seat, facing rearward*:

(1) Position the dummy in a kneeling position by rotating the dummy's legs 90 degrees behind the dummy (from the standing position).

(2) In the case of vehicles equipped with bench seats, position the midsagittal plane of the dummy vertically and parallel to the vehicle's longitudinal centerline and the same distance from the vehicle's longitudinal centerline as the center of the steering wheel rim. In the case of vehicles equipped with bucket seats, position the midsagittal plane of the dummy vertically such that it coincides with the longitudinal centerline of the bucket seat. Position the kneeling dummy in the right front passenger seat with the dummy facing the rear of the vehicle. Position the dummy such that the dummy's head is in contact with the seat back. The arms may be at any position.

(3) Start the vehicle engine and then close all vehicle doors.

(4) Check whether the air bag is deactivated.

(g) *Lying on seat*:

(1) Lay the dummy on the right front passenger seat such that the following criteria are met:

(i) The mid-sagittal plane of the dummy is horizontal,

(ii) The dummy's spine is perpendicular to the vehicle longitudinal axis,

(iii) The dummy's upper arms are parallel to its spine,

(iv) A plane passing through the two shoulder joints of the dummy is vertical and intersects the geometric center of the seat bottom (the seat bottom is the plan view part of the seat from the forward most part of the seat back to the forward most part of the seat),

(v) The anterior of the dummy is facing the vehicle front, and the head is positioned towards the passenger door, and

(vi) Leg position is not set and can be articulated to fit above conditions.

(2) If the top of the dummy's head is not within 50 to 100 mm (2-4 inches) of the vehicle side door structure, translate the dummy laterally so that the top of the dummy head is 50 to 100 mm (2-4 inches) from the vehicle door structure.

(3) Rotate the thighs toward the chest of the dummy and rotate the legs against the thighs.

(4) Place the dummy's upper left arm parallel to the vehicle's transverse plane and the lower arm 90 degrees to the upper arm. Rotate the left lower arm down about the elbow joint until movement is obstructed. The final position should resemble a fetal position.

(5) Start the vehicle engine and then close all vehicle doors.

(6) Check whether the air bag is deactivated.

(h) *Low risk deployment test position 1.*

(1) Position the dummy in accordance with the position set forth in S22.3.2.

(2) Start the vehicle engine and then close all vehicle doors.

(3) Check whether the air bag is deactivated.

(i) *Sitting on seat edge, head contacting the mid-face of the instrument panel.*

(1) Locate and mark the center point of the dummy's rib cage or sternum plate. (The vertical mid-point on the mid-sagittal plane of the frontal chest plate of the dummy). This will be referred to as ''Point A.''

(2) Locate the point on the air bag module cover that is the geometric center of the air bag module cover. This will be referred to as ''Point B''.

(3) Locate the horizontal plane that passes through Point B. This will be referred to as ''Plane 1''.

(4) ''Plane 2'' is defined as the vertical plane which passes through Point B and is parallel to the vehicle's longitudinal axis.

(5) Move the passenger seat to the full rearward seating position.

(6) Place the dummy in the front passenger seat such that:

(i) Point A is located in Plane 2.

(ii) A vertical plane through the shoulder joints of the dummy is 90 degrees to the longitudinal axis of the vehicle.

(iii) The legs are positioned 90 degrees (right angle) from horizontal.

(iv) The dummy is positioned forward in the seat such that the legs rest against the front of the seat and such that the dummy's upper spine plate is vertical.

(7) Rotate the dummy's torso by applying a force towards the front of the vehicle on the spine of the dummy between the shoulder joints. Continue applying force until the head C.G. is in Plane 1, or the spine angle at the upper spine plate is 45 degrees, whichever produces the greatest rotation.

(8) Move the seat forward until the dummy comes in contact with the forward structure of the vehicle, or the seat is full forward, whichever occurs first.

(9) To keep the dummy in position, a thread with a maximum breaking strength of 311 N (70 pounds) that does not interfere with the suppression device may be used to hold the dummy.

(10) Start the vehicle engine and then close all vehicle doors.

(11) Check whether the air bag is deactivated.

S22.3 *Low risk deployment test (Hybrid III 3-year-old child dummy).*

S22.3.1 Position the dummy according to any of the following positions: Position 1 (S22.3.2) or Position 2 (S22.3.3).

S22.3.2 *Position 1 (chest on instrument panel).*

S22.3.2.1 Locate and mark the center point of the dummy's chest/rib plate (the vertical mid-point on the mid-sagittal plane of the frontal chest plate of the dummy). This will be referred to as ''Point A.''

S22.3.2.2 Locate the point on the air bag module cover that is the geometric center of the air bag module cover. This is referred to as ''Point B.''

S22.3.2.3 Locate the horizontal plane that passes through Point B. This will be referred to as ''Plane 1.''

S22.3.2.4 Locate the vertical plane parallel to the vehicle longitudinal axis and passing through Point B. This will be referred to as ''Plane 2.''

S22.3.2.5 Move the passenger seat to the full rearward seating position. Place the seat back in the nominal design position for a 50th percentile adult male dummy (S8.1.3) as specified by the vehicle manufacturer.

S22.3.2.6 Place the dummy in the front passenger seat such that:

S22.3.2.6.1 Point A is located in Plane 2.

S22.3.2.6.2 A vertical plane through the dummy shoulder joints is at 90 degrees to the longitudinal axis of the vehicle.

S22.3.2.6.3 The legs are positioned 90 degrees to the thighs.

S22.3.2.6.4 The dummy is positioned forward in the seat such that the dummy's upper spine plate is vertical, and the legs rest against the front of the seat.

S22.3.2.7 Move the dummy forward until the upper torso or head of the dummy makes contact with the instrument panel of the vehicle.

S22.3.2.8 Once contact is made, raise the dummy vertically until Point A lies within Plane 1 (the vertical height to the center of the air bag) or until a minimum clearance of 6 mm (0.25 inches) between the dummy head and the windshield is attained. If additional height is required, the dummy may be raised with the use of spacers (foam blocks, etc.) placed on the floor of the vehicle.

S22.3.2.9 Position the upper arms parallel to the spine and rotate the lower arms forward (at the elbow joint) sufficiently to prevent contact with or support from the seat.

S22.3.2.10 Position the lower limbs of the dummy so that the feet rest flat on the floorboard (or the feet are positioned parallel to the floorboard) of the vehicle and the legs are vertical. If necessary, raise the dummy vertically with the use of spacers (foam blocks, etc.) placed on the floor of the vehicle.

S22.3.2.11 Support the dummy so that there is minimum interference with the full rotational and translational freedom for the upper torso of the dummy.

S22.3.2.12 If necessary, tether the upper torso with a thread with a maximum breaking strength of 311 N (70 pounds) such that the tether is not situated in the air bag deployment envelope.

S22.3.3 Position 2 (head on instrument panel).

S22.3.3.1 Locate and mark the center point of the dummy's chest/rib plate (the vertical mid-point on the mid-sagittal plane of the frontal chest plate of the dummy). This will be referred to as ''Point A.''

S22.3.3.2 Locate the point on the air bag module cover that is the geometric center of the air bag module cover. This will be referred to as ''Point B.''

S22.3.3.3 Locate the vertical plane which passes through Point B and is parallel to the vehicle longitudinal axis. This will be referred to as ''Plane 2.''

S22.3.3.4 Move the passenger seat to the full rearward seating position. Place the seat back in the nominal design position for a 50th percentile adult male (S8.1.3) as specified by the vehicle manufacturer.

S22.3.3.4 Place the dummy in the front passenger seat such that:

S22.3.3.4.1 Point A is located in Plane 2.

S22.3.3.4.2 A vertical plane through the shoulder joints of the dummy is at 90 degrees to the longitudinal axis of the vehicle.

S22.3.3.4.3 The legs are positioned 90 degrees (right angle) from horizontal.

S22.3.3.4.4 The dummy is positioned forward in the seat such that the legs rest against the front of the seat and such that the dummy's upper spine plate is from vertical. Note: For some seats, it may not be possible to position the dummy with the legs in the prescribed position. In this situation, rotate the legs forward until the dummy is resting on the seat with the feet

positioned flat on the floorboard and the dummy's upper spine plate is vertical.

S22.3.3.5 Move the seat forward, while maintaining the upper spine plate orientation until some portion of the dummy contacts the vehicle's instrument panel.

S22.3.3.5.1 If contact has not been made with the vehicle's instrument panel at the full forward seating position of the seat, slide the dummy forward on the seat until contact is made. Maintain the upper spine plate orientation.

S22.3.3.5.2 Once contact is made, rotate the dummy forward until the head and/or upper torso are in contact with the vehicle's instrument panel. Rotation is achieved by applying a force towards the front of the vehicle on the spine of the dummy between the shoulder joints.

S22.3.3.5.3 Rotate the thighs downward and rotate the legs and feet rearward (toward the rear of vehicle) so as not to impede the rotation of the head/torso into the vehicle's instrument panel.

S22.3.3.5.4 Reposition the legs so that the feet rest flat on (or parallel to) the floorboard with each ankle joint positioned as nearly as possible to the midsaggital plane of the dummy.

S22.3.3.5.5 If necessary, tether the upper torso with a thread with a maximum breaking strength of 311 N (70 pounds) and/or place a wedge under the dummy's pelvis. The tether may not be situated in the air bag deployment envelope. Note: If contact with the instrument panel cannot be made by sliding the dummy forward in the seat, then place the dummy in the forward-most position on the seat that will allow the head/upper torso to rest against the instrument panel of the vehicle.

S22.3.3.6 Position the upper arms parallel to the upper spine plate and rotate the lower arm forward sufficiently to prevent contact with or support from the seat.

S22.3.4 Deploy the right front passenger air bag. If the air bag contains a multistage inflator, any stage or combination of stages may be fired that could deploy in crashes at or below 29 km/h (18 mph), under the test procedure specified in S22.4.

S22.4 *Test procedure for determining stages of air bags subject to low risk deployment test requirement.* In the case of an air bag with a multistage inflator, any stage or combination of stages that fires in the following rigid barrier test may be deployed when conducting the low risk deployment tests described in S22.3, S24.4, and S26.3. Impact the vehicle traveling longitudinally forward at any speed, up to and including 29 km/h (18 mph), into a fixed rigid barrier that is perpendicular ±5 degrees to the line of travel of the vehicle under the applicable conditions of S8 of this standard.

S23 *Requirements using 6-year-old child dummies.*

S23.1 Each vehicle shall, at the option of the manufacturer, meet the requirements specified in S23.2, S23.3, or S23.4, under the test procedures specified in S24.

S23.2 *Option 1—Automatic suppression feature that always suppresses the air bag when a child is present.* Each vehicle shall meet the requirements specified in S23.2.1 through S23.2.2.

S23.2.1 The vehicle shall be equipped with an automatic suppression feature for the passenger air bag which results in deactivation of the air bag during each of the static tests specified in S24.2 (using a Part 572 Subpart N Hybrid III 6-year-old child dummy), and activation of the air bag during each of the static tests specified in S20.3 (using a Part 572 Subpart O Hybrid III 5th percentile adult female dummy).

S23.2.2 The vehicle shall be equipped with a mechanism that indicates whether the occupant restraint system is suppressed. The mechanism need not be located in the occupant compartment.

S23.2.3 The vehicle shall be equipped with a telltale light on the instrument panel meeting the requirements specified in S19.2.3.

S23.3 *Option 2— Dynamic automatic suppression system that suppresses the air bag when an occupant is out of position.* (This option is available under the conditions set forth in S27.1.) The vehicle shall be equipped with a dynamic automatic suppression system for the passenger air bag which meets the requirements specified in S27.

S23.4 *Option 3—Low risk deployment.* Each vehicle shall meet the injury criteria specified in S23.5 of this standard when the passenger air bag is statically deployed in accordance with the procedures specified in S24.3.

S23.5 *Injury criteria (Hybrid III 6-year-old child dummy).*

S23.5.1 All portions of the test dummy shall be contained within the outer surfaces of the vehicle passenger compartment.

S23.5.2 The resultant acceleration at the center of gravity of the head shall be such that the expression:

$$\left[\frac{1}{(t_2 - t_1)}\int_{t_1}^{t_2} a\,dt\right]^{2.5}(t_2 - t_1)$$

shall not exceed 700 where a is the resultant acceleration expressed as a multiple of g (the acceleration of gravity), and t_1 and t_2 are any two points in time during the crash of the vehicle which are separated by not more than a 15 millisecond time interval.

S23.5.3 The resultant acceleration calculated from the output of the thoracic instrumentation shown in drawing [a drawing incorporated by reference in Part 572 would be identified in the final rule] shall not exceed 60 g's, except for intervals whose cumulative duration is not more than 3 milliseconds.

S23.5.4 Compression deflection of the sternum relative to the spine, as determined by instrumentation [a drawing incorporated by reference in Part 572 would be identified in the final rule] shall not exceed 40 mm (1.6 inches).

S23.5.5 The biomechanical neck injury predictor, Nij, shall not exceed a value of 1.0 at any point in time. The following procedure shall be used to compute Nij. The axial force (Fz) and flexion/extension moment about the occipital condyles (My) shall be used to calculate four combined injury predictors, collectively referred to as Nij. These four combined values represent the probability of sustaining each of four primary types of cervical injuries; namely, tension-extension (N_{TE}), tension-flexion (N_{TF}), compression-extension (N_{CE}), and compression-flexion (N_{CF}) injuries. Axial force shall be filtered at SAE class 1000 and flexion/extension moment (My) shall be filtered at SAE class 600. Shear force, which shall be filtered at SAE class 600, is used only in conjunction with the measured moment to calculate the effective moment at the location of the occipital condyles. The equation for calculating the Nij criteria is given by:

Nij=(Fz/Fzc)+(My/Myc)

where Fzc and Myc are critical values corresponding to:

Fzc=2800 N (629 lbf) for tension

Fzc=2800 N (629 lbf) for compression

Myc=93 Nm (69 lbf-ft) for flexion about occipital condyles

Myc=39 Nm (29 lbf-ft) for extension about occipital condyles

Each of the four Nij values shall be calculated at each point in time, and all four values shall not exceed 1.0 at any point in time. When calculating N_{TE} and N_{TF}, all compressive loads shall be set to zero. Similarly, when calculating N_{CE}

and N_{CF}, all tensile loads shall be set to zero. In a similar fashion, when calculating N_{TE} and N_{CE}, all flexion moments shall be set to zero. Likewise, when calculating N_{TF} and N_{CF}, all extension moments shall be set to zero.

S23.5.6 *Test duration for purpose of measuring injury criteria.* For tests conducted pursuant to S23.5, the injury criteria shall be met up to 100 milliseconds after the air bag deploys.

S24 *Test procedure for S23.*

S24.1 *General provisions and definitions.* Tests specifying the use of a forward-facing child seat or booster seat may be conducted using any seat listed in Section D of Appendix A of this standard. The seat may be used or unused; if used there must not be any visible damage.

S24.1.2 The definitions provided in S16.3.1 apply to the tests specified in S24.

S24.2 *Static tests of automatic suppression feature which must result in deactivation of the passenger air bag when a child is present.*

S24.2.1 Except as provided in S24.2.2, all tests specified in S22.2 shall be conducted using the 6-year-old Hybrid III child dummy.

S24.2.2 *Exceptions.* The tests specified in the following paragraphs of S22.2 shall not be conducted using the 6-year-old Hybrid III child dummy: S22.2.2.2(d), (e), (f), (g), and (h).

S24.2.3 *Sitting back in the seat and leaning on the right front passenger door (This test is conducted using the 6-year-old Hybrid III child dummy but not the 3-year-old Hybrid III child dummy).*

(a) Position the right front passenger vehicle seat at any seat track location, at any seat height, and at any seat back angle between the manufacturer's nominal design position for the 50th percentile adult male as specified in S8.1.3.

(b) Position the dummy in the seated position and place the dummy in the right front passenger seat.

(c) Place the dummy's lower torso on the outboard portion of the seat with the dummy's back against the seat back and the dummy's thighs resting on the seat cushion.

(d) Allow the legs of the dummy to extend off the surface of the seat. If this positioning of the dummy's legs is prevented by contact with the instrument panel, rotate the leg toward the floor until there is no contact with the instrument panel.

(e) Rotate the dummy's upper arms toward the seat back until they make contact.

(f) Rotate the dummy's lower arms down until they contact the seat.

(g) Lean the dummy against the outboard door.

(h) Close the vehicle's passenger-side vehicle and then start the vehicle engine; close all remaining doors.

(i) Check whether the air bag is deactivated.

S24.3 *Low risk deployment test (Hybrid III 6-year old child dummy).*

S24.3.1 Position the dummy according to any of the following positions: Position 1 (S24.3.2) or Position 2 (S24.3.3).

S24.3.2 *Position 1 (chest on instrument panel).*

S24.3.2.1 Locate and mark the center point of the dummy's rib cage or sternum plate (the vertical mid-point on the mid-sagittal plane of the frontal chest plate of the dummy). This will be referred to as ''Point A.''

S24.3.2.2 Locate the point on the air bag module cover that is the geometric center of the air bag module cover. This will be referred to as ''Point B.''

S24.3.2.3 Locate the horizontal plane that passes through Point B. This will be referred to as ''Plane 1.''

S24.3.2.4 Locate the vertical plane parallel to the vehicle longitudinal axis and passing through Point B. This will be referred to as ''Plane 2.''

S24.3.2.5 Position the right front passenger vehicle seat at any seat track location, at any seat height, and at any seat back angle between the manufacturer's nominal design position for the 50th percentile adult male as specified in S8.1.3.

S24.3.2.6 Place the dummy in the front passenger seat such that:

S24.3.2.6.1 Point A is located in Plane 2.

S24.3.2.6.2 A vertical plane through the dummy shoulder joints is at 90 degrees to the longitudinal axis of the vehicle.

S24.3.2.6.3 The legs are positioned 90 degrees to the thighs.

S24.3.2.6.4 The dummy is positioned forward in the seat such that the dummy's upper spine plate is 6 degrees forward (toward the front of the vehicle) of the vertical position, and the legs rest against the front of the seat or the feet are resting flat on the floorboard of the vehicle.

S24.3.2.6.5 Mark this position, and remove the legs at the pelvic interface.

S24.3.2.7 Move the dummy forward until the upper torso or head of the dummy makes contact with the vehicle's instrument panel.

S24.3.2.8 Once contact is made, raise the dummy vertically until Point A lies within Plane 1 (the vertical height to the center of the air bag) or until a minimum clearance of 6 mm (0.25 inches) between any part of the dummy head and windshield is attained.

S24.3.2.9 Position the upper arms parallel to the spine and rotate the lower arms forward (at the elbow joint) sufficiently to prevent contact with or support from the seat.

S24.3.2.10 Support the dummy so that there is minimum interference with the full rotational and translational freedom for the upper torso of the dummy.

S24.3.2.10.1 If necessary, tether the upper torso with a thread with a maximum breaking strength of 311 N (70 pounds) such that the tether is not situated in the air bag deployment envelope.

S24.3.3 *Position 2 (head on instrument panel).*

S24.3.3.1 Locate and mark the center point of the dummy's chest/rib plate (the vertical mid-point on the mid-sagittal plane of the frontal chest plate of the dummy). This will be referred to as ''Point A.''

S24.3.3.2 Locate the point on the air bag module cover that is the geometric center of the air bag module cover. This will be referred to as ''Point B.''

S24.3.3.3 Locate the vertical plane which passes through Point B and is parallel to the vehicle longitudinal axis. This will be referred to as ''Plane 2.''

S24.3.3.4 Position the right front passenger vehicle seat at any seat track location, at any seat height, and at any seat back angle between the manufacturer's nominal design position for the 50th percentile adult male as specified in S8.1.3.

S24.3.3.5 Place the dummy in the front passenger seat such that:

S24.3.3.5.1 Point A is located in Plane 2.

S24.3.3.5.2 A vertical plane through the shoulder joints of the dummy is at 90 degrees to the longitudinal axis of the vehicle.

S24.3.3.5.3 The legs are positioned 90 degrees (right angle) from horizontal.

S24.3.3.5.4 The dummy is positioned forward in the seat such that the legs rest against the front of the seat and such that the dummy's upper spine plate is 6 degrees forward (toward front of vehicle) of the vertical position.

Note: For some seats, it may not be possible to position the dummy with the legs in the prescribed position. In this situation, rotate the legs forward until the dummy is resting on the seat with the feet positioned flat on the floorboard and the dummy's upper spine plate is 6 degrees forward (toward the front of the vehicle) of the vertical position.

S24.3.3.6 Move the seat forward, while maintaining the upper spine plate orientation until some portion of the dummy contacts the vehicle's instrument panel.

S24.3.3.6.1 If contact has not been made with the vehicle's instrument panel at the full forward seating position of the seat, slide the dummy forward on the seat until contact is made. Maintain the upper spine plate orientation.

S24.3.3.6.2 Once contact is made, rotate the dummy forward until the head and/or upper torso are in contact with the vehicle's instrument panel. Rotation is achieved by applying a force towards the front of the vehicle on the spine of the dummy between the shoulder joints.

S24.3.3.6.3 Rotate the legs and feet rearward (toward rear of vehicle) so as not to impede the rotation of the head/torso into the vehicle's instrument panel.

S24.3.3.6.4 Reposition the legs so that the feet rest flat on (or parallel to) the floorboard with the ankle joints positioned as nearly as possible to the midsaggital plane of the dummy.

S24.3.3.6.5 If necessary, tether the upper torso with a thread with a maximum breaking strength of 311 N (70 pounds) and/or place a wedge under the dummy's pelvis. The tether may not be situated in the air bag's deployment envelope.

Note: If contact with the instrument panel cannot be made by sliding the dummy forward in the seat, then place the dummy in the forward-most position on the seat that will allow the head/upper torso to rest against the vehicle's instrument panel.

S24.3.3.7 Position the upper arms parallel to the torso and rotate the lower arms forward sufficiently to prevent contact with or support from the seat.

S24.3.4 Deploy the right front passenger air bag. If the air bag contains a multistage inflator, any stage or combination of stages may be fired that could deploy in crashes at or below 29 km/h (18 mph), under the test procedure specified in S22.4.

S25 *Requirements using an out-of-position 5th percentile adult female dummy at the driver position.*

S25.1 Each vehicle shall, at the option of the manufacturer, meet the requirements specified in S25.2 or S25.3 of this standard.

S25.2 *Option 1—Dynamic automatic suppression system.* (This option is available under the conditions set forth in S27.1.) The vehicle shall be equipped with a dynamic automatic suppression system for the driver air bag which meets the requirements specified in S27.

S25.3 *Option 2—Low risk deployment.* Each vehicle shall meet the injury criteria specified in S15.3 of this standard when the driver air bag is statically deployed in accordance with the procedures specified in S26 of this standard.

S26 *Test procedure for low risk deployment of driver-side air bag.*

S26.1 Position the Part 571 Subpart O 5th percentile adult female test dummy according to any of the following positions: Driver position 1 (S26.2) or Driver position 2 (S26.3).

S26.2 *Driver position 1 (chin on module).*

26.2.1 Adjust the steering controls so that the steering wheel hub is at the geometric center of the locus it describes when it is moved through its full range of driving positions. If there is no setting at the geometric center, position it one setting lower than the geometric center.

S26.2.2 Locate the point on the air bag module cover that is the geometric center of the steering wheel. This will be referred to as ''Point B.''

S26.2.3 Locate and mark the center point of the dummy's rib cage or sternum plate (the vertical mid-point on the mid-sagittal plane of the frontal chest plate of the dummy). This will be referred to as ''Point A.''

S26.2.4 Locate the horizontal plane that passes through Point B. This will be referred to as ''Plane 1.''

S26.2.5 Locate the vertical plane perpendicular to Plane 1 and parallel to the vehicle longitudinal axis which passes through Point B. This will be referred to as ''Plane 2.''

S26.2.6 Move the driver seat to the full rearward seating position. Place the seat back in the nominal design position for a 50th percentile adult male (S8.1.3) as specified by the vehicle manufacturer.

S26.2.7 Place the dummy in the seat such that:

S26.2.7.1 Point A is located in Plane 2.

S26.2.7.2 A vertical plane through the dummy shoulder joints is at 90 degrees to the longitudinal axis of the vehicle.

S26.2.7.3 The legs are positioned 90 degrees to the thighs.

S26.2.7.4 Rotate the dummy forward until its upper spine plate angle is 6 degrees forward (toward the front of the vehicle) of the steering wheel angle.

S26.2.8 Adjust the height of the dummy so that the bottom of the chin is in the same horizontal plane as the highest point of the module cover (dummy height can be adjusted using the seat position and/or spacer blocks). If the seat height prevents the bottom of chin from being in the same horizontal plane as the module cover, adjust the dummy height to as close to the prescribed position as possible.

S26.2.9 Move the dummy forward, maintaining the upper spine plate angle and dummy height until the head or torso contacts the steering wheel.

S26.2.10 If necessary, a thread with a maximum breaking strength of 311 N (70 pounds) may be used to hold the dummy against the steering wheel. Position the thread so as to eliminate or minimize any contact with the deploying air bag.

S26.3 *Driver position 2 (chin on rim).*

S26.3.1 The driver's seat track is not specified and may be positioned to best facilitate the positioning of the dummy.

S26.3.2 Locate the point on the air bag module cover that is the geometric center of the steering wheel. This will be referred to as ''Point B.''

S26.3.3 Locate and mark the center point of the dummy's rib cage or sternum plate (the vertical mid-point on the mid-sagittal plane of the frontal chest plate of the dummy). This will be referred to as ''Point A.''

S26.3.4 Locate the horizontal plane that passes through Point B. This will be referred to as ''Plane 1.''

S26.3.5 Locate the vertical plane perpendicular to Plane 1 which passes through Point B. This will be referred to as ''Plane 2.''

S26.3.6 Place the dummy in the front driver seat so that Point A is located in Plane 2.

S26.3.7 Rotate the dummy forward until its upper spine plate is 6 degrees forward (toward the front of the vehicle) of the steering wheel angle.

S26.3.8 Position the dummy so that the center of the chin is in contact with the uppermost portion of the rim of the steering wheel. Do not hook the chin over the top of the rim of the steering wheel. Position the chin to rest on the upper edge of the rim, without loading the neck. If the dummy head contacts the vehicle upper interior before the prescribed position can be obtained, the dummy height may be adjusted as close to the prescribed position as possible, while maintaining a 10±2 mm (0.4±.08 inches) clearance from the vehicle's upper interior.

S26.3.9 To raise the height of the dummy to attain the required positioning, spacer blocks (foam, etc.) may be placed on the driver's seat beneath the dummy. If necessary, a thread with a maximum breaking strength of 311 N (70 pounds) is used to hold the dummy against the steering wheel. Position the thread so as to eliminate or minimize any contact with the deploying air bag.

S26.4 Deploy the driver air bag. If the air bag contains a multistage inflator, any stage or combination of stages is fired that may deploy in crashes at or below 29 km/h (18 mph),

under the test procedure specified in S22.4.

S27 *Option for dynamic automatic suppression system that suppresses the air bag when an occupant is out-of-position.*

S27.1 *Availability of option.* This option is available for either air bag, singly or in conjunction, subject to the requirements of S27, if:

(a) A petition for rulemaking to establish dynamic automatic suppression system test procedures is submitted pursuant to Subpart B of Part 552 and a test procedure applicable to the vehicle is added to S28 pursuant to the procedures specified by that subpart, or

(b) A test procedure applicable to the vehicle is otherwise added to S28.

S27.2 *Definitions.* For purposes of S27 and S28, the following definitions apply:

Dynamic automatic suppression system or DASS means a portion of an air bag system that automatically controls whether or not the air bag deploys during a crash by:

(1) Sensing the location of an occupant, moving or still, in relation to the air bag;

(2) Interpreting the occupant characteristics and location information to determine whether or not the air bag should deploy; and

(3) Activating or suppressing the air bag system based on the interpretation of occupant characteristics and location information.

Automatic suppression zone or ASZ means a three-dimensional zone adjacent to the air bag cover, specified by the vehicle manufacturer, where the deployment of the air bag will be suppressed by the DASS if a vehicle occupant enters the zone under specified conditions.

S27.3 *Requirements.* Each vehicle shall, at each applicable front outboard designated seating position, when tested under the conditions of S28 of this standard, comply with the requirements specified in S27.4 through S27.6.

S27.4 Each vehicle shall be equipped with a DASS.

S27.5 *Static test requirement (low risk deployment for occupants outside the ASZ).*

S27.5.1 *Driver (Part 572, Subpart O 5th percentile female dummy).* Each vehicle shall meet the injury criteria specified in S15.3 of this standard when the driver air bag is statically deployed in accordance with the procedures specified in S28.1.

S27.5.2 *Passenger (Part 572, Subpart P 3-year-old child dummy and Part 572, Subpart N 6-year-old child dummy).* Each vehicle shall meet the injury criteria specified in S21.5 and S23.5, as appropriate, when the passenger air bag is statically deployed in accordance with the procedures specified in S28.2.

S27.6 *Dynamic test requirement (suppression of air bag for occupants inside the ASZ).*

S27.6.1 *Driver.* The DASS shall suppress the driver air bag before the head, neck, or torso of the specified test device enters the ASZ when the vehicle is tested under the procedures specified in S28.3.

S27.6.2 *Passenger.* The DASS shall suppress the passenger air bag before head, neck, or torso of the specified test device enters the ASZ when the vehicle is tested under the procedures specified in S28.4.

S28 *Test procedure for S27 of this standard.* [Reserved]

S28.1 *Driver suppression zone verification test (part 572, subpart O 5th percentile female dummy). [Reserved]*

S28.2 *Passenger suppression zone verification test (part 572, subpart P 3-year-old child dummy and Part 572, subpart N 6-year-old child dummies).* [Reserved)]

S28.3 *Driver dynamic test procedure for DASS requirements. [Reserved]*

S28.4 *Passenger dynamic test procedure for DASS requirements.* [Reserved]

S29 *Manufacturer option to certify vehicles to certain static suppression test requirements using human beings rather than test dummies.*

S29.1 At the option of the manufacturer, instead of using test dummies in conducting the tests for the following static test requirements, human beings may be used as specified. If human beings are used, they shall assume, to the extent possible, the final physical position specified for the corresponding dummies for each test.

(a) If a manufacturer decides to certify a vehicle using a human being for a static test, it must use humans for the entire series of tests, *e.g.*, 3-year-old children for each static test involving 3-year-old test dummies. If a manufacturer decides to certify a vehicle using a test dummy for a static test, it must use test dummies for the entire series of tests, *e.g.*, a Hybrid III 3-year-old child dummy for each static test involving 3-year-old test dummies.

(b) For S21.2, instead of using the Part 572 Subpart P Hybrid III 3-year-old child dummy, a human child who weighs between 13.4 and 18 kg (29.5 and 39.5 lb), and who is between 89 and 99 cm (35 and 39 inches) tall may be used.

(c) For S23.2, instead of using the Part 572 Subpart N Hybrid III 6-year-old child dummy, a human child who weighs between 21 and 25.6 kg (46.5 and 56.5 lb), and who is between 114 and 124.5 cm (45 and 49 inches) tall may be used.

(d) For S19.2, S21.2, and S23.2, instead of using the Part 572 Subpart O Hybrid III 5th percentile adult female test dummy, a female who weighs between 46.7 and 51.25 kg (103 lb and 113 lb), and who is between 139.7 and 150 cm (55 and 59 inches) tall may be used.

S29.2 Human beings shall be dressed in a cotton T-shirt, full length cotton trousers, and sneakers. Specified weights and heights include clothing.

S29.3 A manufacturer exercising this option shall upon request—

(a) Provide NHTSA with a method, and identify any parts or equipment necessary to deactivate the air bag during compliance testing under S20.3, S22.2, and S24.2; such assurance may be made by removing the air bag; and

(b) Provide NHTSA with a method to assure that the same test results would be obtained if the air bag were not deactivated.

S30 *Cruise control deactivation.*

S30.1 If a vehicle is equipped with a cruise control device, this device shall be deactivated whenever any stage of the air bag system deploys.

S30.2 The cruise control device shall be deactivated when the device is tested under the procedures specified in S31.

S31 *Test procedure for determining deactivation of cruise control.*

S31.1 Each vehicle that is equipped with a cruise control device shall be equipped with an electrical terminal that permits measurement of the cruise control voltage.

S31.2 Start the vehicle engine and engage the cruise control.

S31.3 Deploy any stage of the vehicle's frontal air bag system.

S31.4 The voltage at the cruise control voltage terminal shall be zero within 100 ms after any stage of the vehicle's frontal air bag system deploys.

S32 *Provisions for emergency rescue operations.*

S32.1 The air bag system shall deactivate whenever battery power to the vehicle is interrupted for at least 60 seconds, and shall reactivate once power from the battery is restored.

S32.2 The air bag system shall deactivate when the system is tested under the procedures specified in S33.

S33 *Test procedure for air bag deactivation during emergency rescue operations.*

S33.1 Each vehicle shall be equipped with an electrical terminal that permits measurement of the frontal air bag firing voltage. This terminal will

be referred to as the ''air bag firing voltage terminal.''

S33.2 Start the vehicle engine. Disconnect the vehicle's battery power. Record the time of disconnect as time TD.

S33.3 Measure the voltage at the air bag firing terminal at time TD plus 61 seconds.

S33.4 The voltage at the air bag firing terminal shall remain zero after time TD plus 61 seconds until power is manually restored to the terminal.

S33.5 Reconnect the battery. Start the vehicle engine. Record the time of engine start as time TR. Monitor the air bag readiness indicator (S4.5.2) at time TR plus 60 seconds to check if the air bag is activated, i.e., the indicator shall not be illuminated.

Figures to § 571.208

* * * * *

BILLING CODE 4910–59–P

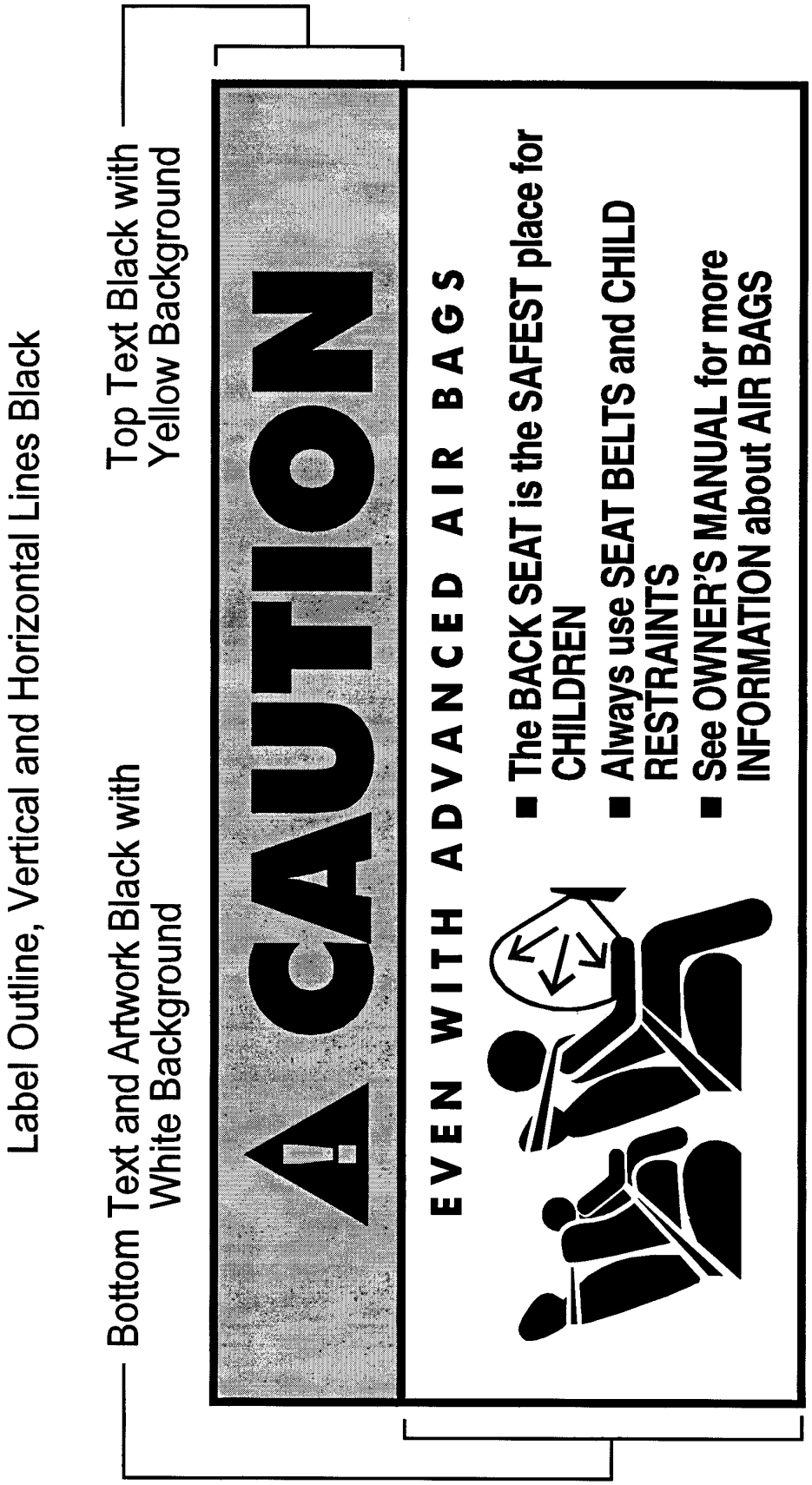

Figure 8. Sun Visor Label Visible when Visor is in Down Position.

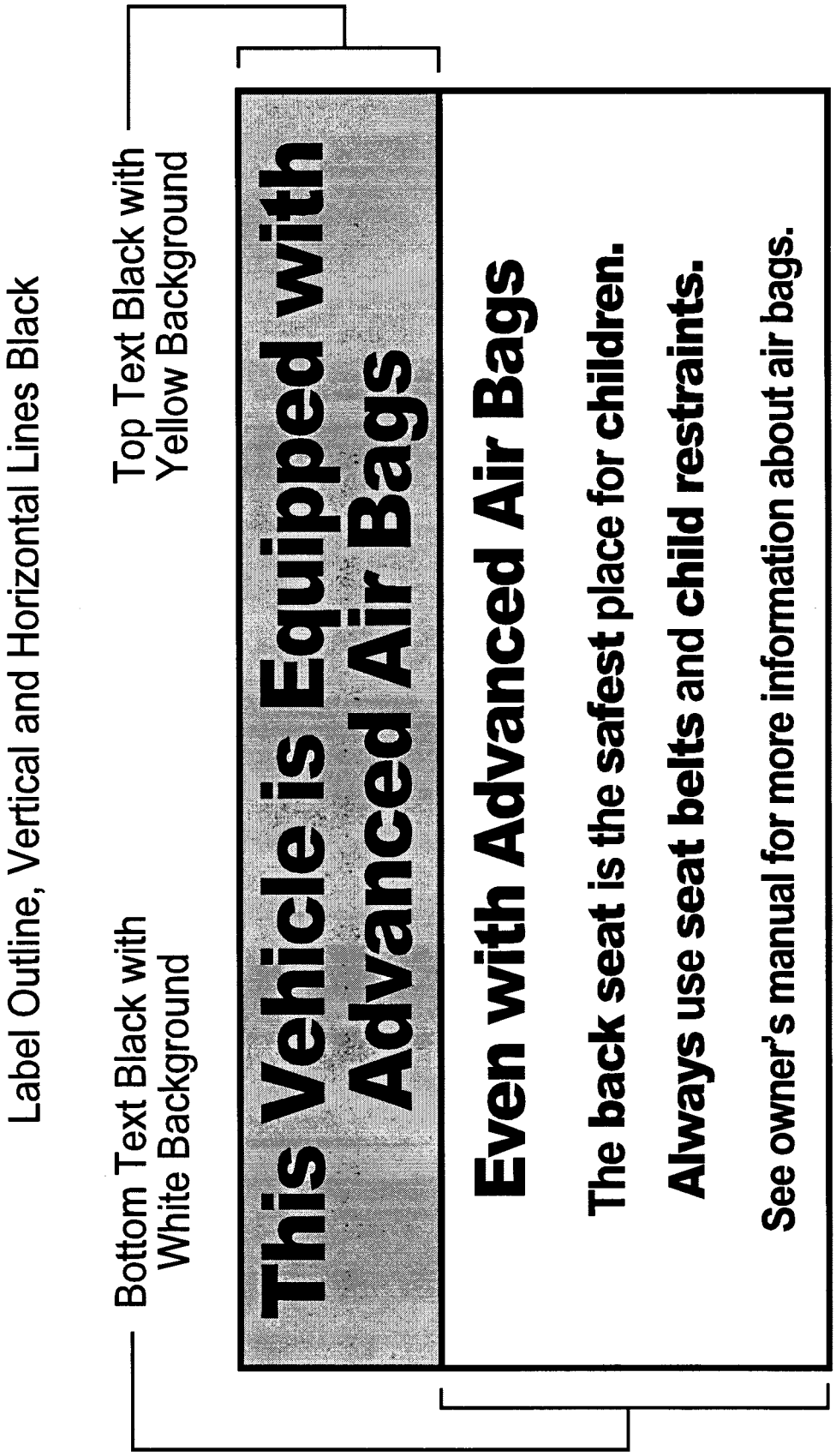

Figure 9. Removable Label on Dash.

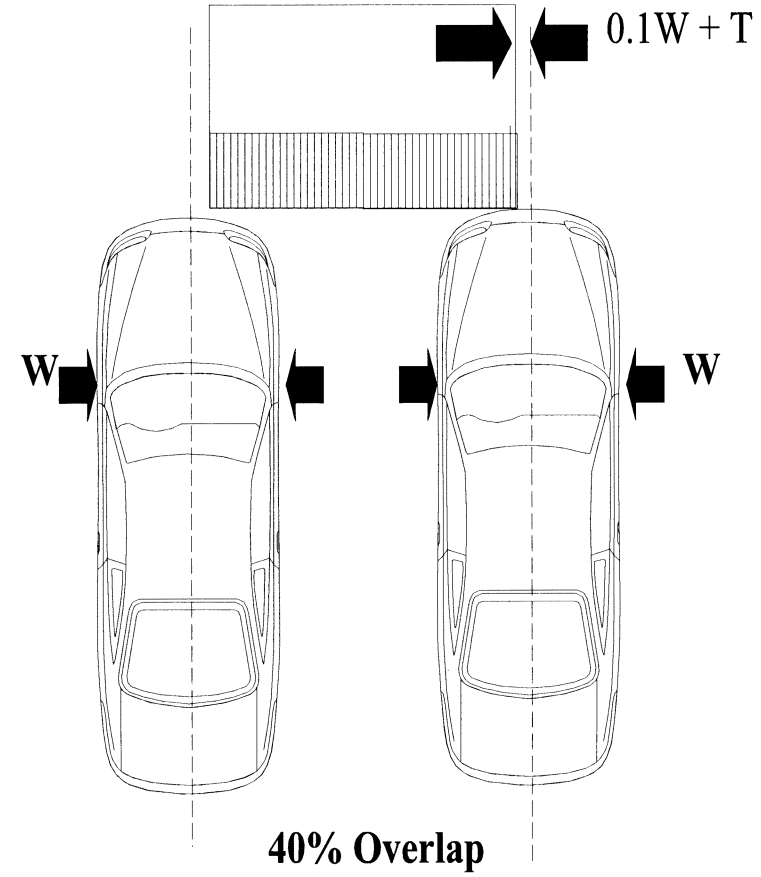

Legend

---- Longitudinal Centerline of Vehicle

W Vehicle Width

T Tolerance

Figure 10. Configuration for Frontal Offset Deformable Barrier Test

BILLING CODE 4910–59–C

Appendix A to § 571.208—Selection of Child Restraint Systems

A. The following car bed, manufactured between January 1, 1999 and [insert date of final rule], may be used by the National Highway Traffic Safety Administration to test the suppression system of a vehicle that has been certified as being in compliance with 49 CFR Part 571.208 S19.

Cosco Dream Ride Car Bed

B. Any of the following rear facing child restraint systems, manufactured between January 1, 1999 and [insert date of final rule], may be used by the National Highway Traffic Safety Administration to test the suppression system of a vehicle that has been certified as being in compliance with 49 CFR Part 571.208 S19. When the restraint system comes equipped with a removable base, the test may be run either with the base attached or without the base.

Century Assura
Century 560 Institutional
Century Smart Fit
Cosco Arriva
Cosco Turnabout
Evenflo Discovery
Evenflo First choice
Evenflo On My Way
Fisher-Price Safe Embrace Infant
Graco Infant 7493
Kolcraft Secura

C. Any of the following forward-facing convertible child restraint systems, manufactured between January 1, 1999 and [insert date of final rule], may be used by the National Highway Traffic Safety Administration to test the suppression system of a vehicle that has been certified as being in compliance with 49 CFR Part 571.208 S19, or S21.

Britax Roundabout
Century Encore
Cosco Touriva
Evenflo Scout
Early Development Folder A-Lock
Fisher Price Safe-Embrace
Kolcraft Secure Fit

D. Any of the following forward-facing toddler/belt positioning booster systems, manufactured between January 1, 1999 and [insert date of final rule], may be used by the National Highway Traffic Safety Administration as test devices to test the suppression system of a vehicle that has been certified as being in compliance with 49 CFR Part 571.208 S21 or S23.

Britax Cruiser
Century Next Step
Cosco High Back Booster
Evenflo Evolution
Kolcraft Prodigy

6. Part 585 would be revised to read as follows:

PART 585—ADVANCED AIR BAG PHASE-IN REPORTING REQUIREMENTS

Sec.
585.1 Scope.
585.2 Purpose.
585.3 Applicability.
585.4 Definitions.
585.5 Reporting requirements.
585.6 Records.
585.7 Petition to extend period to file report.

Authority: 49 U.S.C. 322, 30111, 30115, 30117, and 30166; delegation of authority at 49 CFR 1.50.

§ 585.1 Scope.

This part establishes requirements for manufacturers of passenger cars and trucks, buses, and multipurpose passenger vehicles with a GVWR of 3,855 kg (8500 pounds) or less and an unloaded vehicle weight of 2,495 kg (5500 pounds) or less to submit a report, and maintain records related to the report, concerning the number of such vehicles that meet the advanced air bag requirements of Standard No. 208, ''Occupant crash protection'' (49 CFR 571.208).

§ 585.2 Purpose.

The purpose of these reporting requirements is to aid the National Highway Traffic Safety Administration in determining whether a manufacturer has complied with the advanced air bag requirements of Standard No. 208.

§ 585.3 Applicability.

This part applies to manufacturers of passenger cars and trucks, buses, and multipurpose passenger vehicles with a GVWR of 3,855 kg (8500 pounds) or less and an unloaded vehicle weight of 2,495 kg (5500 pounds) or less. However, this part does not apply to any manufacturers whose production consists exclusively of walk-in vans, vehicles designed to be sold exclusively to the U.S. Postal Service, vehicles manufactured in two or more stages, and vehicles that are altered after previously having been certified in accordance with part 567 of this chapter.

§ 585.4 Definitions.

(a) All terms defined in 49 U.S.C. 30102 are used in their statutory meaning.

(b) Bus, gross vehicle weight rating or GVWR, multipurpose passenger vehicle, passenger car, and truck are used as defined in § 571.3 of this chapter.

(c) *Advanced air bag requirements of Standard No. 208* refers to the requirements set forth in S14.3, S15, S17, S19, S21, S23, S25, S30, and S32 of Federal Motor Vehicle Safety Standard No. 208, 49 CFR 571.208.

(d) *Production year* means the 12-month period between September 1 of one year and August 31 of the following year, inclusive.

§ 585.5 Reporting requirements.

(a) *Advanced credit phase-in reporting requirements.* Within 60 days after the end of the production years ending August 31, 2000, August 31, 2001, and August 31, 2002, each manufacturer choosing to certify vehicles according to the advanced air bag requirements of Standard No. 208 shall submit a report to the National Highway Traffic Safety Administration concerning its passenger cars, trucks, buses, and multipurpose passenger vehicles produced in that production year for advance credit for production years ending August 31, 2003, August 31, 2004, or August 31, 2005. Each report shall—

(1) Identify the manufacturer;

(2) State the full name, title, and address of the official responsible for preparing the report;

(3) Identify the production year being reported on;

(4) Provide the information specified in paragraph (c) of this section;

(5) Be written in the English language; and

(6) Be submitted to: Administrator, National Highway Traffic Safety Administration, 400 Seventh Street, SW, Washington, DC 20590.

(b) *Phase-in reporting requirements.* Within 60 days after the end of the production years ending August 31, 2003, August 31, 2004 and August 31, 2005, each manufacturer shall submit a report to the National Highway Traffic Safety Administration concerning its compliance with the advanced air bag requirements of Standard No. 208 for its passenger cars, trucks, buses, and multipurpose passenger vehicles produced in that production year. Each report shall also include the number of pre-phase-in vehicles, if any, that are being applied to the production year being reported. Each report shall—

(1) Identify the manufacturer;

(2) State the full name, title, and address of the official responsible for preparing the report;

(3) Identify the phase-in schedule paragraph from S14.1 of 49 CFR 571.208 for which it has chosen to comply with until September 1, 2005;

(4) Identify the production year being reported on;

(5) Contain a statement regarding whether or not the manufacturer complied with the advanced air bag requirements of Standard No. 208 for the period covered by the report and the basis for that statement;

(6) Provide the information specified in paragraph (d) of this section;

(7) Be written in the English language; and

(8) Be submitted to: Administrator, National Highway Traffic Safety Administration, 400 Seventh Street, SW, Washington, DC 20590.

(c) *Advanced credit phase-in report content.* (1) Manufacturers are not required to report any information with respect to those vehicles that are walk-in vans, vehicles designed to be sold exclusively to the U.S. Postal Service, vehicles manufactured in two or more stages, and vehicles that are altered after previously having been certified in accordance with part 567 of this chapter.

(2) *Production.* Each manufacturer shall report for the production year for which the report is filed the number of passenger cars and trucks, buses, and multipurpose passenger vehicles with a GVWR of 3,855 kg (8,500 pounds) or less and an unloaded vehicle weight of 2,495 kg (5,500 pounds) or less that meet the advanced air bag requirements of Standard No. 208.

(3) *Vehicles produced by more than one manufacturer.* Each manufacturer whose reporting of information is affected by one or more of the express written contracts permitted by S14.1.3.2 of Standard No. 208 shall:

(i) Report the existence of each contract, including the names of all parties to the contract and explain how the contract affects the report being submitted.

(ii) Report the actual number of vehicles covered by each contract.

(d) *Phase-in report content.* (1) Manufacturers are not required to report any information with respect to those vehicles that are walk-in vans, vehicles designed to be sold exclusively to the U.S. Postal Service, vehicles manufactured in two or more stages, and vehicles that are altered after previously having been certified in accordance with part 567 of this chapter.

(2) *Basis for phase-in production goals.* For production years ending August 31, 2003, August 31, 2004 and August 31, 2005, each manufacturer shall provide the number of passenger cars and trucks, buses, and multipurpose passenger vehicles with a GVWR of 3,855 kg (8,500 pounds) or less and an unloaded vehicle weight of 2,495 kg (5,500 pounds) or less manufactured for sale in the United States for each of the three previous production years, or, at the manufacturer's option, for the current production year. A new manufacturer that has not previously manufactured passenger cars and trucks, buses and multipurpose passenger vehicles with a GVWR of 3,855 kg (8,500 pounds) or less and an unloaded vehicle weight of 2,495 kg (5,500 pounds) or less for sale in the United States must report the number of such vehicles manufactured during the current production year.

(3) *Production.* Each manufacturer shall report for the production year for which the report is filed the number of passenger cars and trucks, buses, and multipurpose passenger vehicles with a GVWR of 3,855 kg (8,500 pounds) or less and an unloaded vehicle weight of 2,495 kg (5,500 pounds or less that meet the advanced air bag requirements of Standard No. 208.

(4) *Vehicles produced by more than one manufacturer.* Each manufacturer whose reporting of information is affected by one or more of the express written contracts permitted by S14.1.3.2 of Standard No. 208 shall:

(i) Report the existence of each contract, including the names of all parties to the contract and explain how the contract affects the report being submitted.

(ii) Report the actual number of vehicles covered by each contract.

§ 585.6 Records.

Each manufacturer shall maintain records of the Vehicle Identification Number for each passenger car, multipurpose passenger vehicle, truck and bus for which information is reported under §§ 585.5(c)(2) and (d)(3) until December 31, 2006.

§ 585.7 Petitions to extend period to file report.

A petition for extension of the time to submit a report must be received not later than 15 days before expiration of the time stated in § 585.5(a) and (b). The petition must be submitted to: Administrator, National Highway Traffic Safety Administration, 400 Seventh Street, SW, Washington, DC 20590. The filing of a petition does not automatically extend the time for filing a report. A petition will be granted only if the petitioner shows good cause for the extension, and if the extension is consistent with the public interest.

PART 595—RETROFIT ON-OFF SWITCHES FOR AIR BAGS

7. The authority citation for part 595 would continue to read as follows:

Authority: 49 U.S.C. 322, 30111, 30115, 30117, 30122 and 30166; delegation of authority at 49 CFR 1.50.

8. Section 595.5 would be amended by revising paragraph (a) to read as follows:

§ 595.5 Requirements.

(a) Beginning January 19, 1998, a dealer or motor vehicle repair business may modify a motor vehicle manufactured before September 1, 2005 by installing an on-off switch that allows an occupant of the vehicle to turn off an air bag in that vehicle, subject to the conditions in paragraphs (b)(1) through (5) of this section.

* * * * *

Issued on: October 26, 1999.

Stephen R. Kratzke,

Acting Associate Administrator for Safety Performance Standards.

Note: The following appendixes will not appear in the Code of Federal Regulations.

Appendix A to the Preamble—Response to Petition

In conjunction with commenting on the NPRM, Carl Nash and Donald Friedman submitted a petition for rulemaking to amend Standard No. 208 to ''require effective belt use inducement.'' The petitioners noted that such an amendment would need to be consistent with a provision of the National Traffic and Motor Vehicle Safety Act which prohibits ignition interlocks and continuous buzzers.

The petitioners stated that the inducements could include, but need not be limited to: (1) A continuous visual reminder to buckle seat belts located prominently on the instrument panel, (2) an intermittent, repeating audible suggestion (such as with a synthesized voice) warning occupants to buckle their seat belt, and (3) disruption of electrical power to such ''non-essential'' accessories as the radio, tape or CD player, and air conditioning. Mr. Nash and Mr. Friedman argued that a belt use inducement has the potential to save a minimum of 7,000 additional lives per year, and that, with an effective belt use inducement, NHTSA could simultaneously rescind Standard No. 208's unbelted test.

After carefully considering the petition submitted by Mr. Nash and Mr. Friedman, we have decided to deny it. We note that Standard No. 208 already requires both a warning light and an audible signal to remind occupants to wear their seat belts. The required warning system is tied to the driver seat belt, and the light and audible signal are only required for a brief period after the driver starts the vehicle.

In evaluating Mr. Nash's and Mr. Friedman's petition, we have considered whether the new requirements they recommend would (1) likely result in additional safety benefits, (2) be acceptable to the public, and (3) be within our statutory authority. None of their recommended requirements meet all of these criteria.

We note that our agency's previous experience with ignition interlocks indicates that great care must be taken in requiring vehicle modifications to induce higher belt use, to avoid consumer backlash. As of August 1973, Standard No. 208 required all new cars to be equipped either with automatic protection or an ignition interlock for both front outboard seating positions. General Motors sold about ten thousand of its 1974 model year cars equipped with air bags that met the automatic protection requirement. Every other 1974 model year car sold in the United States came with an ignition interlock, which prevented the engine from operating if either the driver or front seat outboard passenger failed to fasten their manual seat belt.

In a notice published in the **Federal Register** (39 FR 10272) on March 19, 1974, we described the public reaction to the ignition interlock as follows: ''Public resistance to the belt-starter interlock system * * * has been substantial, with current tallies of proper lap-shoulder belt usage on 1974 models running at or below the 60% level. Even that figure is probably optimistic as a measure of results to be achieved, in light of the likelihood that as time passes the awareness that the forcing systems can be disabled, and the means for doing so will become more widely disseminated * * *''

There were also speeches on the floor of both houses of Congress expressing the public's anger at the interlock requirement. On October 27, 1974, President Ford signed into law a bill that prohibited any Federal motor vehicle safety standard from requiring or permitting as a means of compliance any seat belt interlock system. In response to this change in the law, we published a final rule in the **Federal Register** (39 FR 38380) on October 31, 1974 that deleted the interlock option from Standard No. 208 effective immediately.

We believe that the petitioner's recommendation for a Federal requirement for disruption of electrical power to such accessories as the radio, tape or CD player, and air conditioning, if a person is not wearing their seat belts, would be unacceptable to a significant portion of the public. Such a requirement would be indistinguishable in nature from a requirement for an interlock.

As to the petitioners' recommendation that we require an intermittent, repeating audible suggestion (such as with a synthesized voice) warning occupants to buckle their seat belt, we are expressly prohibited from promulgating a requirement under the 1974 amendments to the Safety Act. The petitioners recognized that the amendments prohibited us from requiring ''continuous buzzers.'' However, the term ''continuous buzzer'' was defined to mean any buzzer other than one which operates only during the 8 second period after the ignition is turned to the ''start'' or ''on'' position.[1] Thus, we do not have the authority to require audible warnings outside that 8 second period.

While we would have authority to require a continuous visual reminder, as also recommended by the petitioners, they did not provide any information indicating that such a reminder would likely result in additional safety benefits over the existing warning systems.

We also note that, even if we believed that there existed an effective belt use inducement that we had authority to require and that was publicly acceptable, we could not simultaneously rescind Standard No. 208's unbelted test. First, there would be no way of knowing how effective any belt use inducement would be until after it had been in place for several years. Second, as we noted in the September 1998 NPRM, even in countries where seat belt use is 90 percent, unbelted occupants still represent about 33 percent of all fatalities. We also note that TEA 21 requires us to conduct rulemaking to improve occupant protection for occupants of different sizes, belted and unbelted, while minimizing risks. Rescission of Standard No. 208's test requirements for unbelted occupants would not be consistent with the statutory requirement to improve protection for unbelted occupants.

While we have decided to deny Mr. Nash's and Mr. Friedman's petition, for the reasons discussed above, we recognize that increased seat belt use offers the potential of enormous safety benefits. Even small increases in seat belt use offer the potential of significant savings in lives. We therefore encourage vehicle manufacturers to evaluate whether vehicle warning and other systems can be improved to increase seat belt use in ways that are acceptable to their customers.

We note that, earlier this year, Ford announced plans to use a new ''Belt-Minder'' system that warns unbuckled drivers with an intermittent chime until they buckle their seat belts. Drivers who don't want to wear their belts can disable the intermittent chime by buckling, then unbuckling their belt. While we note that this is a system that we would not have authority to require, we are encouraged by Ford's innovative approach and are hopeful that it will result in increased seat belt use and savings in lives.

Appendix B to the Preamble—Glossary

Air Bags—In General

Air bags are inflatable restraints. Enough gas must be pumped into them to cushion occupants. Otherwise, occupants, especially large ones, could ''bottom out'' the air bag and hit the vehicle interior in a crash. Thus, the amount of pressure within air bags must be carefully controlled. This is done by controlling both the rate at which gas is pumped into the air bag and the rate at which the gas is released from the air bag through vents or microscopic holes in the fabric itself.

Categories of Frontal Air Bags

Advanced air bags. Advanced air bags are air bags that minimize the risk of serious injury to out-of-position occupants and provide improved protection to occupants in high speed crashes. They accomplish this either by incorporating various technologies that enable the air bags to adapt their performance to a wider range of occupant sizes and crash conditions and/or by being designed to both inflate in a manner that does not pose such risk as well as to provide improved protection. Some of these technologies are multi-stage inflators, occupant position sensors, occupant weight and pattern sensors, and new air bag fold patterns. (The inflators and sensors are explained below.)

Redesigned air bags.[1] Redesigned air bags are bag systems used in vehicles that have been certified to the unbelted sled test option instead of the unbelted crash test option in Standard No. 208. Typically, a redesigned air bag in a MY 1998 or 1999 vehicle model has less power than the air bags in earlier model years of that vehicle model. However, the power levels of current air bags vary widely. For example, the redesigned air bags in some current vehicles are more powerful than the unredesigned air bags in some earlier vehicles.

Inflators

Inflators are the devices which pump the gas into air bags to inflate them in a crash.

Single stage inflators. Single stage inflators fill air bags with the same level of power in all crashes, regardless of whether the crash is a relatively low or high speed crash.

Multi-stage inflators. Multi-stage inflators (also known as multi-level inflators) operate at different levels of power, depending on which stage is activated. The activation of the different stages can be linked to crash severity sensors. In a vehicle with dual-stage inflators, only the first stage (lowest level of power) will be activated in relatively low speed crashes, while the first and second stages (highest level of power) will be activated in higher speed crashes. As crash severity increases, so must the pressure inside the air bag in order to cushion the occupants.

Sensors

Many advanced air bag systems utilize various sensors to obtain information about crashes, vehicles and their occupants. This information is used to adapt the performance of the air bag to the particular circumstances of the crash. It is used in determining whether an air bag should deploy and, if it should, and if the air bag has multiple inflation levels, at what level. Examples of these sensors include the following:

Crash severity sensors. Crash severity sensors measure the severity of a crash, *i.e.*, the rate of reduction in velocity when a vehicle strikes another object. If a relatively low severity crash is sensed, only the lowest stage of a dual-stage inflator will fill the air bag; if a more severe crash is sensed, both stages will fill the air bag, inflating it at a higher level.

Belt use sensors. Belt use sensors determine whether an occupant is belted or not. An advanced air bag system in vehicles with crash severity sensors and dual-stage inflators might use belt use information to adjust deployment thresholds for unbelted and belted occupants. Since an unbelted occupant needs the protection of an air bag at lower speeds than a belted occupant does, the air bag would deploy at a lower threshold for an unbelted occupant. (Deployment thresholds are explained below.)

Seat position sensors. Seat position sensors determine how far forward or back a seat is adjusted on its seat track. An advanced air bag system could be designed so a dual-stage air bag deploys at a lower level when the seat is all the way forward than it does when the seat is farther back. This would benefit those short-statured drivers who move their seats all the way forward.

Occupant weight sensors. Occupant weight sensors measure the weight of an occupant. An advanced air bag system might use this information to prevent the air bag from deploying at all in the presence of children.

[1] This provision was later codified using different language but without substantive change at 49 U.S.C. 30124.

[1] These air bags are also sometimes called depowered air bags, second generation air bags or next generation air bags.

Pattern sensors. Pattern sensors evaluate the impression made by an occupant or object on the seat cushion to make determinations about occupant presence and the overall size and position of the occupant. They could also sense the presence of a particular object like a child seat. An advanced air bag system might use this information to prevent the air bag from deploying in the presence of children. An advanced air bag system might utilize both an occupant weight sensor and an occupant pattern sensor.

Deployment Thresholds

The term ''deployment threshold'' is typically used to refer to the lowest rate of reduction in vehicle velocity in a crash at which a particular air bag is designed to deploy.

No-fire threshold. The no-fire threshold is the crash speed below which the air bag is designed to never deploy.

All-fire threshold. The all-fire threshold is the crash speed at or above which the air bag is designed to always deploy.

Gray zone. The gray zone is the range of speeds between the no-fire and all-fire thresholds in which the air bag may or may not deploy.

Vehicles with advanced air bags may have different deployment thresholds for belted and unbelted occupants, *e.g.,* the deployment threshold may be higher if an occupant is belted. (See belt use sensors above.)

Crash Tests vs. Sled Tests

In crash tests, instrumented test dummies are placed in a production vehicle which is then crashed into a barrier. Measurements from the test dummies are used to determine the forces, and estimate the risk of serious injury, that people would have experienced in the crash.

In sled tests, no crash takes place. The vehicle is placed on a sled-on-rails, and instrumented test dummies are placed in the vehicle. The sled and vehicle are accelerated very rapidly backward. As the vehicle moves backward, the dummies move forward inside the vehicle in much the same way that people would in a frontal crash. The air bags are manually deployed at a pre-selected time during the sled test. Measurements from the dummies are used to determine the forces, and estimate the risk of serious injury, that people would have experienced in the crash.

Fixed Barrier Crash Tests

All of the crash tests proposed in this SNPRM are fixed barrier crash tests, i.e., the test vehicle is crashed into a barrier that is fixed in place (as opposed to moving). The types of proposed fixed barrier crash tests are shown in Figure B1.

Rigid barrier test, perpendicular impact. In a rigid barrier, perpendicular impact test, the vehicle is crashed straight into a rigid barrier that does not absorb any crash energy. The full width of the vehicle's front end hits the barrier.

Rigid barrier, oblique impact test. In a rigid barrier, oblique impact test, the vehicle is crashed at an angle into a rigid barrier.

Offset deformable barrier test. In an offset deformable barrier test, one side of a vehicle's front end, not the full width, is crashed into a barrier with a deformable face that absorbs some of the crash energy.

BILLING CODE 4910–59–P

Figure B1

Types of Fixed Barrier Crash Tests

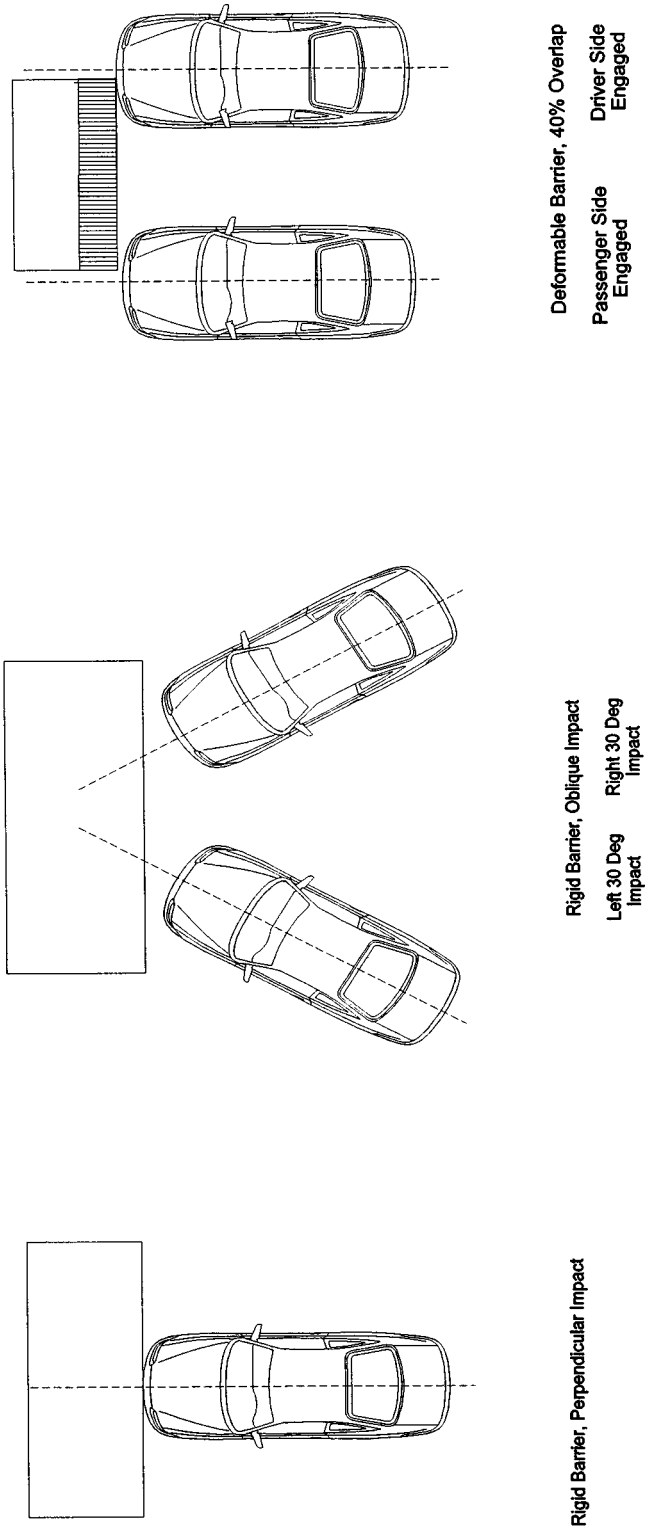

BILLING CODE 4910–59–C

Crash Pulses

A crash pulse is the graph or picture of how quickly the vehicle occupant compartment is decelerating at different times during a crash.

Stiff crash pulses. In crashes with stiff pulses, the occupant compartment decelerates very abruptly. An example of a crash with a stiff pulse would be a full head-on crash of a vehicle into a like vehicle. The perpendicular rigid barrier crash test produces a stiff crash pulse.

Soft crash pulses. In crashes with soft pulses, the occupant compartment decelerates less abruptly, compared to crashes with hard pulses. An example of a crash with a soft pulse would be the crash of a vehicle into sand-filled barrels such as those seen at toll booths or at the leading edge of a concrete median barrier. The offset deformable barrier crash test and the 30 degree oblique rigid barrier crash test produce soft crash pulses.

In crashes involving comparable reductions in velocity, an unrestrained occupant would hit the vehicle interior (*i.e.*, steering wheel, instrument panel and windshield) at a much higher speed in a crash with a stiff pulse than in a crash with a soft pulse.

Belted and Unbelted Tests

Belted tests use belted dummies, while unbelted tests use unbelted dummies. Despite increases in seat belt use, nearly 50 percent of all occupants in potentially fatal crashes are unbelted. Unbelted tests are intended to evaluate the protection provided these persons, many of whom are teenagers and young adults.

Static Out-of-Position Tests

Static out-of-position tests are called ''static'' because the vehicle does not move during the test. These tests are used to measure the risk that an air bag poses to out-of-position occupants. Test dummies are placed in specified positions that are extremely close to the air bag, typically with some portion of the dummy touching the air bag cover. The air bag is deployed. Measurements from the test dummy are used to determine the forces, and estimate the risk of serious injury, that people would have experienced in the crash.

Injury Criteria and Performance Limits—In General

In a crash test, sled test, or static out-of-position test, measurements are taken from the test dummy instruments that indicate the forces that a person would have experienced under the same conditions. Standard No. 208 specifies several injury criteria. For each criterion, the Standard also specifies a performance limit, based on the level of forces that create a significant risk of producing serious injury.

Injury Criteria

This SNPRM proposes performance limits for various injury criteria to address the risk of several types of injuries. Among these injury criteria are:

Head Injury Criterion or HIC. Head Injury Criterion or HIC address the risk of head injury;

Nij. Nij addresses the risk of neck injury; and

Chest Acceleration and Chest Deflection. Chest Acceleration and Chest Deflection address the risk of chest injury.

Test Dummies

This SNPRM proposes to use several test dummies to represent children and adults of different sizes. These dummies are:

12-month old Crash Restraints Air Bag Interaction (CRABI) dummy, representing an infant;

Hybrid III 3-year-old and 6-year-old child dummies, representing young children;

Hybrid III 5th percentile adult female dummy, representing a small woman;

Hybrid III 50th percentile adult male dummy, representing an average-size man.

[FR Doc. 99–28366 Filed 11–2–99; 8:56 am]

BILLING CODE 4910–59–P