10–15–99
Vol. 64 No. 199
Pages 55809–56130

federal register

Friday
October 15, 1999

The **FEDERAL REGISTER** is published daily, Monday through Friday, except official holidays, by the Office of the Federal Register, National Archives and Records Administration, Washington, DC 20408, under the Federal Register Act (44 U.S.C. Ch. 15) and the regulations of the Administrative Committee of the Federal Register (1 CFR Ch. I). The Superintendent of Documents, U.S. Government Printing Office, Washington, DC 20402 is the exclusive distributor of the official edition.

The **Federal Register** provides a uniform system for making available to the public regulations and legal notices issued by Federal agencies. These include Presidential proclamations and Executive Orders, Federal agency documents having general applicability and legal effect, documents required to be published by act of Congress, and other Federal agency documents of public interest.

Documents are on file for public inspection in the Office of the Federal Register the day before they are published, unless the issuing agency requests earlier filing. For a list of documents currently on file for public inspection, see http://www.nara.gov/fedreg.

The seal of the National Archives and Records Administration authenticates the Federal Register as the official serial publication established under the Federal Register Act. Under 44 U.S.C. 1507, the contents of the **Federal Register** shall be judicially noticed.

The **Federal Register** is published in paper and on 24x microfiche. It is also available online at no charge as one of the databases on GPO Access, a service of the U.S. Government Printing Office.

The online edition of the **Federal Register** is issued under the authority of the Administrative Committee of the Federal Register as the official legal equivalent of the paper and microfiche editions (44 U.S.C. 4101 and 1 CFR 5.10). It is updated by 6 a.m. each day the **Federal Register** is published and it includes both text and graphics from Volume 59, Number 1 (January 2, 1994) forward.

GPO Access users can choose to retrieve online **Federal Register** documents as TEXT (ASCII text, graphics omitted), PDF (Adobe Portable Document Format, including full text and all graphics), or SUMMARY (abbreviated text) files. Users should carefully check retrieved material to ensure that documents were properly downloaded.

On the World Wide Web, connect to the **Federal Register** at http://www.access.gpo.gov/nara. Those without World Wide Web access can also connect with a local WAIS client, by Telnet to swais.access.gpo.gov, or by dialing (202) 512-1661 with a computer and modem. When using Telnet or modem, type swais, then log in as guest with no password.

For more information about GPO Access, contact the GPO Access User Support Team by E-mail at gpoaccess@gpo.gov; by fax at (202) 512–1262; or call (202) 512–1530 or 1–888–293–6498 (toll free) between 7 a.m. and 5 p.m. Eastern time, Monday–Friday, except Federal holidays.

The annual subscription price for the **Federal Register** paper edition is $555, or $607 for a combined **Federal Register,** Federal Register Index and List of CFR Sections Affected (LSA) subscription; the microfiche edition of the **Federal Register** including the Federal Register Index and LSA is $220. Six month subscriptions are available for one-half the annual rate. The charge for individual copies in paper form is $8.00 for each issue, or $8.00 for each group of pages as actually bound; or $1.50 for each issue in microfiche form. All prices include regular domestic postage and handling. International customers please add 25% for foreign handling. Remit check or money order, made payable to the Superintendent of Documents, or charge to your GPO Deposit Account, VISA, MasterCard or Discover. Mail to: New Orders, Superintendent of Documents, P.O. Box 371954, Pittsburgh, PA 15250–7954.

There are no restrictions on the republication of material appearing in the **Federal Register.**

How To Cite This Publication: Use the volume number and the page number. Example: 64 FR 12345.

SUBSCRIPTIONS AND COPIES

PUBLIC	
Subscriptions:	
Paper or fiche	**202–512–1800**
Assistance with public subscriptions	**512–1806**
General online information	**202–512–1530; 1–888–293–6498**
Single copies/back copies:	
Paper or fiche	**512–1800**
Assistance with public single copies	**512–1803**
FEDERAL AGENCIES	
Subscriptions:	
Paper or fiche	**523–5243**
Assistance with Federal agency subscriptions	**523–5243**

Printed on recycled paper.

Contents

Federal Register

Vol. 64, No. 199

Friday, October 15, 1999

Advisory Commission on Electronic Commerce
See Electronic Commerce Advisory Commission

Agency for Toxic Substances and Disease Registry
NOTICES
Superfund program:
Hazardous substances priority list (toxicological profiles), 55943–55944

Agriculture Department
See Animal and Plant Health Inspection Service
See National Agricultural Statistics Service
See Natural Resources Conservation Service

Animal and Plant Health Inspection Service
RULES
Exportation and importation of animals and animal products:
Bovine spongiform encephalopathy; disease status change—
Belgium, 55813–55814
Luxembourg, 55812–55813
Plant-related quarantine, domestic:
Oriental fruit fly, 55811–55812
NOTICES
Agency information collection activities:
Proposed collection; comment request; correction, 55895–55896

Arts and Humanities, National Foundation
See National Foundation on the Arts and the Humanities

Blind or Severely Disabled, Committee for Purchase From People Who Are
See Committee for Purchase From People Who Are Blind or Severely Disabled

Census Bureau
NOTICES
Meetings:
African American, American Indian and Alaska Native, Asian and Pacific Islander, and Hispanic Populations Census Advisory Committees, 55898–55899
American Indian and Alaska Native Populations Census Advisory Committee, 55899–55900

Coast Guard
RULES
Drawbridge operations:
Massachusetts, 55831
Regattas and marine parades:
Night in Venice, 55829–55830
Stone Mountain Productions, 55830–55831

Commerce Department
See Census Bureau
See National Oceanic and Atmospheric Administration
NOTICES
Agency information collection activities:
Submission for OMB review; comment request, 55898

Committee for Purchase From People Who Are Blind or Severely Disabled
RULES
Pricing policies; miscellaneous amendments, 55841–55843
NOTICES
Procurement list; additions and deletions, 55897–55898

Committee for the Implementation of Textile Agreements
NOTICES
Cotton, wool, and man-made textiles:
Indonesia, 55903–55904
United Mexican States, 55904–55905

Consumer Product Safety Commission
NOTICES
Meetings; Sunshine Act, 55905

Corporation for National and Community Service
NOTICES
Agency information collection activities:
Proposed collection; comment request, 55905–55907

Defense Department
See Navy Department

Drug Enforcement Administration
NOTICES
Applications, hearings, determinations, etc.:
LaJevic, James C., D.M.D., 55962–55965
Musselman, Bernard C., M.D., 55965–55968

Electronic Commerce Advisory Commission
NOTICES
State and local taxation of Internet transactions and electronic commerce; proposals request; and meeting, 55894–55895

Employment and Training Administration
NOTICES
Labor surplus areas classifications:
Annual list, 55969–55992

Employment Standards Administration
NOTICES
Minimum wages for Federal and federally-assisted construction; general wage determination decisions, 55992–55993

Energy Department
See Federal Energy Regulatory Commission
NOTICES
Atomic energy agreements; subsequent arrangements, 55907–55908
Meetings:
Nonproliferation and National Security Advisory Committee, 55908

Environmental Protection Agency
RULES
Air quality implementation plans; approval and promulgation; various States:
North Carolina, 55831–55834

Clean Air Act:
Acid rain program—
Nitrogen Oxides Emission Reduction Program; response to court remand, 55834–55838
Pesticides; tolerances in food, animal feeds, and raw agricultural commodities:
Rhizobium inoculants, 55838–55841
PROPOSED RULES
Air quality implementation plans; approval and promulgation; various States:
North Carolina, 55879
Clean Air Act:
Acid rain program—
Nitrogen Oxides Emission Reduction Program; response to court remand, 55880
Hazardous waste:
Identification and listing—
Exclusions, 55880–55892
NOTICES
Agency information collection activities:
Submission for OMB review; comment request, 55910–55911
Air programs:
State implementation plans; adequacy status for transportation conformity purposes, 55911–55912
Environmental statements; availability, etc.:
Agency statements—
Weekly receipts, 55912
Hazardous waste:
Waste Isolation Pilot Plant—
Federal environmental laws; compliance determination (October 1996-1998), 55912–55913
Meetings:
Environmental risks to children; agency research strategy; workshop, 55913–55914
Pesticide, food, and feed additive petitions:
AgrEvo Environmental Health, 55914–55921
Pesticides; emergency exemptions, etc.:
1,3-Dichloropropene, 55921–55923
Reports and guidance documents; availability, etc.:
Carbon monoxide; air quality criteria, 55923
Superfund; response and remedial actions, proposed settlements, etc.:
Sun Laboratories Site, GA, 55923–55924

Equal Employment Opportunity Commission
NOTICES
Meetings; Sunshine Act, 55924

Executive Office of the President
See Presidential Documents
See Trade Representative, Office of United States

Federal Aviation Administration
RULES
Airworthiness directives:
Pratt & Whitney, 55815
Class D and Class E airspace, 55815–55816
Class E airspace, 55816–55820
NOTICES
Advisory circulars; availability, etc.:
Taxi, takeoff and landing roll design loads, 56016

Federal Communications Commission
NOTICES
Reports and guidance documents; availability, etc.:
Year 2000 network stabilization; policy statement, 55924–55926

Federal Deposit Insurance Corporation
NOTICES
Agency information collection activities:
Submission for OMB review; comment request, 55926

Federal Energy Regulatory Commission
NOTICES
Hydroelectric applications, 55909–55910
Applications, hearings, determinations, etc.:
CNG Transmission Corp., 55908
Eastern Shore Natural Gas Co., 55908–55909
El Paso Natural Gas Co., 55909
MidAmerican Energy Co.; correction, 55909

Federal Housing Finance Board
NOTICES
Federal home loan bank system:
Community support review—
Members selected for review; list, 55926–55935

Federal Reserve System
NOTICES
Banks and bank holding companies:
Formations, acquisitions, and mergers, 55935–55936
Nonbanking activities, 55936–55937
Permissible nonbanking activities, 55937

Federal Trade Commission
NOTICES
Agency information collection activities:
Proposed collection; comment request, 55937–55943

Fish and Wildlife Service
PROPOSED RULES
Endangered and threatened species:
Critical habitat designations—
Tidewater goby, 55892–55893
NOTICES
Environmental statements; availability, etc.:
Tar Creek Superfund Site, Ottawa County, OK; injuries to migratory birds and threatened and endangered species, 55955

Food and Drug Administration
NOTICES
Debarment orders:
Marcus, Jay, 55944–55946
Meetings:
Medical device quality systems inspection technique; FDA/industry exchange workshop, 55946–55947
Reports and guidance documents; availability, etc.:
Animal feed and feed ingredients; dioxin in anti-caking agents; industry guidance, 55948

Health and Human Services Department
See Agency for Toxic Substances and Disease Registry
See Food and Drug Administration
See Health Care Financing Administration
See National Institutes of Health
RULES
Grants:
Block grant programs, 55843–55858

Health Care Financing Administration
NOTICES
Agency information collection activities:
Proposed collection; comment request, 55948–55949

Meetings:
Medicare+Choice Organizations; collection of encounter data for risk adjustment, 55949–55950

Housing and Urban Development Department
RULES
FHA programs; introduction:
Expiring programs; savings clause; CFR correction, 55828
Mortgage and loan insurance programs:
Single family mortgage insurance—
Floodplain requirements applicable to new construction; clarification, 56107–56111
NOTICES
Grants and cooperative agreements; availability, etc.:
Facilities to assist homeless—
Excess and surplus Federal property, 55954–55955

Immigration and Naturalization Service
NOTICES
Agency information collection activities:
Submission for OMB review; comment request, 55968–55969

Indian Affairs Bureau
PROPOSED RULES
Land and water:
Land held in trust for benefit of Indian Tribes and individual Indians; title acquisition, 55878

Interior Department
See Fish and Wildlife Service
See Indian Affairs Bureau
See Land Management Bureau
See Minerals Management Service
See Surface Mining Reclamation and Enforcement Office

International Trade Commission
NOTICES
Import investigations:
Fresh and chilled Atlantic salmon from—
Norway, 55957–55958
Heavy forged handtools from—
China, 55958
Polyethylene terephthalate film from—
Korea, 55958–55959
Sodium thiosulfate from—
Various countries, 55959–55960
Sparklers from—
China, 55960
Stainless steel butt-weld pipe fittings from—
Various countries, 55960–55961
Stainless steel pipe from—
Korea and Taiwan, 55961
Stainless steel wire rod from—
Various coutries, 55962

Justice Department
See Drug Enforcement Administration
See Immigration and Naturalization Service
See Juvenile Justice and Delinquency Prevention Office

Juvenile Justice and Delinquency Prevention Office
NOTICES
Grants and cooperative agreements; availability, etc.:
Comprehensive program plan (2000 FY), 56083–56105

Labor Department
See Employment and Training Administration
See Employment Standards Administration

Land Management Bureau
NOTICES
Closure of public lands:
Oregon, 55956
Public land orders:
New Mexico; correction, 55956
Realty actions; sales, leases, etc.:
Arizona, 55956

Minerals Management Service
NOTICES
Meetings:
Minerals Management Advisory Board, 55956–55957

National Agricultural Statistics Service
NOTICES
Committees; establishment, renewal, termination, etc.:
Agriculture Statistics Advisory Committee, 55896

National Credit Union Administration
PROPOSED RULES
Credit unions:
Leasing, 55866–55871
Trustees and custodians of pension plans; shared insurance and appendix, 55871–55873

National Foundation on the Arts and the Humanities
NOTICES
Meetings:
Leadership Initiatives Advisory Panel, 55993

National Institutes of Health
NOTICES
Meetings:
National Cancer Institute, 55950–55951
National Eye Institute, 55951
National Institute of Allergy and Infectious Diseases, 55951
National Institute of Diabetes and Digestive and Kidney Diseases, 55951–55952
National Institute on Alcohol Abuse and Alcoholism, 55952–55953
National Institute on Deafness and Other Communication Disorders, 55952
Scientific Review Center, 55953–55954

National Oceanic and Atmospheric Administration
RULES
Endangered and threatened species:
Sea turtle conservation; shrimp trawling requirements—
Cape Lookout, NC, offshore waters affected by Hurricanes Dennis and Floyd; limited tow times use as alternative to turtle excluder devices, 55858–55860
Sea turtle conservation; summer flounder trawling requirements—
Turtle excluder devices, 55860–55864
Fishery conservation and management:
Alaska; fisheries of Exclusive Economic Zone—
Pollock, 55865
Northeastern United States fisheries—
Northeast multispecies, 55821–55828
NOTICES
Agency information collection activities:
Proposed collection; comment request, 55900–55901
Submission for OMB review; comment request, 55901–55902

National Weather Service; modernization and restructuring:
Weather Service offices—
Consolidation, automation, and closure certifications, 55902–55903

Natural Resources Conservation Service
NOTICES
Meetings:
Agricultural Air Quality Task Force, 55896–55897

Navy Department
RULES
Navy regulations; revision, 56061–56082
NOTICES
Meetings:
Planning and Steering Advisory Committee, 55907

Nuclear Regulatory Commission
RULES
Independent storage of spent nuclear fuel and high-level radioactive waste; licensing requirements:
Holders of and applicants for certificates of compliance and their contractors and subcontractors; expanded applicability, 56113–56128
NOTICES
Enforcement actions; policy and procedure:
Enforcement action against nonlicensees for 10 CFR Part 72 violations, 56129
Environmental statements; availability, etc.:
Virginia Electric & Power Co., 55994–55996
Meetings:
Organization for Economic Cooperation and Development; Halden Reactor Project, Norway; research products and results; seminar, 55996
Applications, hearings, determinations, etc.:
Consolidated Edison Co. of New York, Inc., 55993–55994

Office of United States Trade Representative
See Trade Representative, Office of United States

Pension Benefit Guaranty Corporation
RULES
Single employer plans:
Allocation of assets—
Interest assumptions for valuing benefits, 55828–55829
NOTICES
Single-employer and multiemployer plans:
Interest rates and assumptions, 55996–55997

Presidential Documents
ADMINISTRATIVE ORDERS
Immigration; custody and screening of aliens encountered on vessels interdicted on the high seas (Memorandum of September 24, 1999), 55809

Public Health Service
See Agency for Toxic Substances and Disease Registry
See Food and Drug Administration
See National Institutes of Health

Securities and Exchange Commission
NOTICES
Agency information collection activities:
Submission for OMB review; comment request, 55997
Meetings; Sunshine Act, 55998
Self-regulatory organizations; proposed rule changes:
American Stock Exchange LLC, 55998–56000
National Association of Securities Dealers, Inc., 56000–56005
New York Stock Exchange, Inc., 56005–56008
Pacific Exchange, Inc., 56008–56012
Philadelphia Stock Exchange, Inc., 56012–56014

Small Business Administration
PROPOSED RULES
Small business size standards:
Help Supply Services; $10 million in average annual receipts, 55873–55878

State Department
NOTICES
Art objects; importation for exhibition:
Arts of Korea: Ancient to Modern, 56014
Meetings:
Overseas Security Advisory Council, 56014
Organization, functions, and authority delegations:
United States Information Agency; responsibilities redelegated to Under Secretary of State for Public Diplomacy and Public Affairs et al., 56014–56015

State Justice Institute
NOTICES
Grants, cooperative agreements, and contracts; guidelines, 56021–56060

Statistical Reporting Service
See National Agricultural Statistics Service

Surface Mining Reclamation and Enforcement Office
PROPOSED RULES
Permanent program and abandoned mine land reclamation plan submissions:
Alabama, 55878–55879

Surface Transportation Board
NOTICES
Railroad services abandonment:
Burlington Northern & Santa Fe Railway Co., 56016–56017

Textile Agreements Implementation Committee
See Committee for the Implementation of Textile Agreements

Toxic Substances and Disease Registry Agency
See Agency for Toxic Substances and Disease Registry

Trade Representative, Office of United States
NOTICES
United States-Israel Free Trade Area Implementation Act; qualifying industrial zone designations, 56015–56016

Transportation Department
See Coast Guard
See Federal Aviation Administration
See Surface Transportation Board
PROPOSED RULES
Standard time zone boundaries:
Kentucky, 55892

Treasury Department
NOTICES
Committees; establishment, renewal, termination, etc.:
National Center for State and Local Law Enforcement Training Advisory Committee, 56017

U.S. Trade Deficit Review Commission
NOTICES
Hearings, 56017–56018

Veterans Affairs Department
NOTICES
Committees; establishment, renewal, termination, etc.:
National Research Advisory Council, 56018
Meetings:
Former Prisoners of War Advisory Committee, 56018–56019
Minority Veterans Advisory Committee, 56019
Voluntary Service National Advisory Committee, 56019
Women Veterans Advisory Committee, 56019–56020

Separate Parts In This Issue

Part II
Department of Justice, Justice Institute, 56021–56060

Part III
Department of Defense, Department of Navy, 56061–56082

Part IV
Department of Justice, Juvenile Justice and Delinquency Prevention Office, 56083–56105

Part V
Department of Housing and Urban Development, 56107–56111

Part VI
Nuclear Regulatory Commission, 56113–56129

Reader Aids
Consult the Reader Aids section at the end of this issue for phone numbers, online resources, finding aids, reminders, and notice of recently enacted public laws.

CFR PARTS AFFECTED IN THIS ISSUE

A cumulative list of the parts affected this month can be found in the Reader Aids section at the end of this issue.

3CFR
Memorandum:
September 24, 1999.....55809

7 CFR
301.....55811

9 CFR
94 (2 documents) 55812, 55813

10 CFR
72.....56114

12 CFR
Proposed Rules:
714.....55866
724.....55871
745.....55871

13 CFR
Proposed Rules:
121.....55873

14 CFR
39.....55815
71 (7 documents) 55815, 55816, 55817, 55818, 55819, 55820

15 CFR
902.....55821

24 CFR
200 (2 documents) 55828, 56108
203.....56108
234.....56108

25 CFR
Proposed Rules:
151.....55878

29 CFR
4044.....55828

30 CFR
Proposed Rules:
901.....55878

32 CFR
700.....56062

33 CFR
100 (2 documents) 55829, 55830
117.....55831

40 CFR
52.....55831
76.....55834
180.....55838
Proposed Rules:
52.....55879
76.....55880
261.....55880

41 CFR
51-2.....55841
51-5.....55841

45 CFR
96.....55843

49 CFR
Proposed Rules:
71.....55892

50 CFR
222 (2 documents) 55858, 55860
223 (2 documents) 55858, 55860
648.....55821
679.....55865
Proposed Rules:
17.....55892

Federal Register
Vol. 64, No. 199
Friday, October 15, 1999

Presidential Documents

Title 3—

The President

Memorandum of September 24, 1999

Delegation of Authority Under Sections 212(f) and 215(a)(1) of the Immigration and Nationality Act

Memorandum for the Attorney General

By the authority vested in me as President by the Constitution and the laws of the United States of America, including sections 212(f) and 215(a)(1) of the Immigration and Nationality Act, as amended (8 U.S.C. 1182(f) and 1185(a)(1)), and in light of Proclamation 4865 of September 29, 1981, I hereby delegate to the Attorney General the authority to:

(a) Maintain custody, at any location she deems appropriate, and conduct any screening she deems appropriate in her unreviewable discretion, of any undocumented person she has reason to believe is seeking to enter the United States and who is encountered in a vessel interdicted on the high seas through December 31, 2000; and

(b) Undertake any other appropriate actions with respect to such aliens permitted by law.

With respect to the functions delegated by this order, all actions taken after April 16, 1999, for or on behalf of the President that would have been valid if taken pursuant to this memorandum are ratified.

This memorandum is not intended to create, and should not be construed to create, any right or benefit, substantive or procedural, legally enforceable by any party against the United States, its agencies or instrumentalities, officers, employees, or any other person, or to require any procedures to determine whether a person is a refugee.

You are authorized and directed to publish this memorandum in the **Federal Register**.

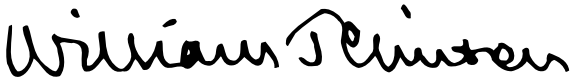

THE WHITE HOUSE,
Washington, September 24, 1999.

[FR Doc. 99–27147
Filed 10–14–99; 8:45 am]
Billing code 4410–07–M

Rules and Regulations

Federal Register
Vol. 64, No. 199
Friday, October 15, 1999

This section of the FEDERAL REGISTER contains regulatory documents having general applicability and legal effect, most of which are keyed to and codified in the Code of Federal Regulations, which is published under 50 titles pursuant to 44 U.S.C. 1510.

The Code of Federal Regulations is sold by the Superintendent of Documents. Prices of new books are listed in the first FEDERAL REGISTER issue of each week.

DEPARTMENT OF AGRICULTURE

Animal and Plant Health Inspection Service

7 CFR Part 301

[Docket No. 99–044–2]

Oriental Fruit Fly; Removal of Quarantined Area

AGENCY: Animal and Plant Health Inspection Service, USDA.

ACTION: Interim rule and request for comments.

SUMMARY: We are amending the Oriental fruit fly regulations by removing the quarantine on a portion of Hillsborough County, FL, and by removing the restrictions on the interstate movement of regulated articles from that area. This action is necessary to relieve restrictions that are no longer needed to prevent the spread of the Oriental fruit fly into noninfested areas of the United States. We have determined that the Oriental fruit fly has been eradicated from this portion of Hillsborough County, FL, and that the quarantine and restrictions are no longer necessary. This portion of Hillsborough County, FL, was the last remaining area in Florida quarantined for Oriental fruit fly. Therefore, as a result of this action, there are no longer any areas in Florida quarantined for Oriental fruit fly.

DATES: This interim rule was effective October 7, 1999. We invite you to comment on this docket. We will consider all comments that we receive by December 14, 1999.

ADDRESSES: Please send your comment and three copies to: Docket No. 99–044–2, Regulatory Analysis and Development, PPD, APHIS, Suite 3C03, 4700 River Road, Unit 118, Riverdale, MD 20737–1238.

Please state that your comment refers to Docket No. 99–044–2.

You may read any comments that we receive on this docket in our reading room. The reading room is located in room 1141 of the USDA South Building, 14th Street and Independence Avenue, SW., Washington, DC. Normal reading room hours are 8 a.m. to 4:30 p.m., Monday through Friday, except holidays. To be sure someone is there to help you, please call (202) 690–2817 before coming.

APHIS documents published in the **Federal Register**, and related information, including the names of organizations and individuals who have commented on APHIS rules, are available on the Internet at http://www.aphis.usda.gov/ppd/rad/webrepor.html.

FOR FURTHER INFORMATION CONTACT: Mr. Michael B. Stefan, Operations Officer, Invasive Species and Pest Management Staff, PPQ, APHIS, 4700 River Road Unit 134, Riverdale, MD 20737–1236; (301) 734–8247.

SUPPLEMENTARY INFORMATION:

Background

The Oriental fruit fly, *Bactrocera dorsalis* (Hendel), is a destructive pest of citrus and other types of fruits, nuts, and vegetables. The short life cycle of the Oriental fruit fly allows rapid development of serious outbreaks that can cause severe economic losses. Heavy infestations can cause complete loss of crops.

The Oriental fruit fly regulations, contained in 7 CFR 301.93 through 301.93–10 (referred to below as the regulations), impose restrictions on the interstate movement of regulated articles from quarantined areas to prevent the spread of the Oriental fruit fly to noninfested areas of the United States. The regulations also designate soil and a large number of fruits, nuts, vegetables, and berries as regulated articles.

In an interim rule effective on June 9, 1999, and published in the **Federal Register** on June 15, 1999 (64 FR 31963–31964, Docket No. 99–044–1), we quarantined a portion of Hillsborough County, FL, and restricted the interstate movement of regulated articles from the quarantined area.

Based on trapping surveys conducted by inspectors of Florida State and county agencies and by inspectors of the Animal and Plant Health Inspection Service, we have determined that the Oriental fruit fly has been eradicated from the quarantined portion of Hillsborough County, FL. The last finding of the Oriental fruit fly in this area was June 11, 1999.

Since then, no evidence of Oriental fruit fly infestation has been found in this area. Based on our experience, we have determined that sufficient time has passed without finding additional flies or other evidence of infestation to conclude that the Oriental fruit fly no longer exists in Hillsborough County, FL. Therefore, we are removing Hillsborough County, FL, from the list of quarantined areas in § 301.93–3(c). Oriental fruit fly infestations are not known to exist anywhere else in the continental United States except in a portion of Los Angeles, CA.

Immediate Action

The Administrator of the Animal and Plant Health Inspection Service has determined that there is good cause for publishing this interim rule without prior opportunity for public comment. Immediate action is warranted to remove an unnecessary regulatory burden on the public. A portion of Hillsborough County, FL, was quarantined due to the possibility that the Oriental fruit fly could be spread from this area to noninfested areas of the United States. Since this situation no longer exists, immediate action is necessary to remove the quarantine on Hillsborough County, FL, and to relieve the restrictions on the interstate movement of regulated articles from that area.

Because prior notice and other public procedures with respect to this action are impracticable and contrary to the public interest under these conditions, we find good cause under 5 U.S.C. 553 to make this action effective less than 30 days after publication. We will consider comments that are received within 60 days of publication of this rule in the **Federal Register**. After the comment period closes, we will publish another document in the **Federal Register**. The document will include a discussion of any comments we receive and any amendments we are making to the rule as a result of the comments.

Executive Order 12866 and Regulatory Flexibility Act

This rule has been reviewed under Executive Order 12866. For this action, the Office of Management and Budget

has waived its review process required by Executive Order 12866.

This interim rule relieves restrictions on the interstate movement of regulated articles from a portion of Hillsborough County, FL.

Within the previously quarantined portion of Hillsborough County, FL, there are approximately 125 entities that will be affected by this rule. All would be considered small entities. These include 1 transportation terminal, 75 fruit stands, 15 mobile vendors, 20 food stores, 1 common carrier, and 13 nurseries. These small entities comprise less than 1 percent of the total number of similar small entities operating in the State of Florida. In addition, these small entities sell regulated articles primarily for local intrastate, not interstate, movement so the effect, if any, of this regulation on these entities appears to be minimal.

The effect on those few entities that do move regulated articles interstate was minimized by the availability of various treatments that, in most cases, allowed these small entities to move regulated articles interstate with very little additional cost.

Under these circumstances, the Administrator of the Animal and Plant Health Inspection Service has determined that this action will not have a significant economic impact on a substantial number of small entities.

Executive Order 12372

This program/activity is listed in the Catalog of Federal Domestic Assistance under No. 10.025 and is subject to Executive Order 12372, which requires intergovernmental consultation with State and local officials. (See 7 CFR part 3015, subpart V.)

Executive Order 12988

This interim rule has been reviewed under Executive Order 12988, Civil Justice Reform. This rule: (1) Preempts all State and local laws and regulations that are inconsistent with this rule; (2) has no retroactive effect; and (3) does not require administrative proceedings before parties may file suit in court challenging this rule.

Paperwork Reduction Act

This rule contains no new information collection or recordkeeping requirements under the Paperwork Reduction Act of 1995 (44 U.S.C. 3501 *et seq.*).

List of Subjects in 7 CFR Part 301

Agricultural commodities, Plant diseases and pests, Quarantine, Reporting and recordkeeping requirements, Transportation.

Accordingly, we are amending 7 CFR part 301 as follows:

PART 301—DOMESTIC QUARANTINE NOTICES

1. The authority citation for part 301 continues to read as follows:

Authority: 7 U.S.C. 147a, 150bb, 150dd, 150ee, 150ff, 161, 162, and 164–167; 7 CFR 2.22, 2.80, and 371.2(c).

2. Section 301.93–3, paragraph (c), the entry for Florida is removed.

Done in Washington, DC, this 7th day of October 1999 .

Bobby R. Acord,

Acting Administrator, Animal and Plant Health Inspection Service.

[FR Doc. 99–27001 Filed 10–14–99; 8:45 am]

BILLING CODE 3410–34–U

DEPARTMENT OF AGRICULTURE

Animal and Plant Health Inspection Service

9 CFR Part 94

[Docket No. 97–118–2]

Change in Disease Status of Luxembourg Because of BSE

AGENCY: Animal and Plant Health Inspection Service, USDA.

ACTION: Affirmation of interim rule as final rule.

SUMMARY: We are adopting as a final rule, without change, an interim rule that added Luxembourg to the list of regions where bovine spongiform encephalopathy exists. We took this action because bovine spongiform encephalopathy was detected in a cow in Luxembourg. The effect of the interim rule was to prohibit the importation of ruminants that have been in Luxembourg and meat, meat products, and certain other products of ruminants that have been in Luxembourg. The interim rule was necessary to reduce the risk that bovine spongiform encephalopathy could be introduced into the United States.

EFFECTIVE DATE: The interim rule became effective on December 2, 1997.

FOR FURTHER INFORMATION CONTACT: Dr. John Cougill, Staff Veterinarian, Animal Products Program, National Center for Import and Export, VS, APHIS, 4700 River Road Unit 40, Riverdale, MD 20737–1231; (301) 734–3399; or e-mail: john.w.cougill@usda.gov.

SUPPLEMENTARY INFORMATION:

Background

In an interim rule effective December 2, 1997, and published in the **Federal Register** on December 17, 1997 (62 FR 65999–66001, Docket No. 97–118–1), we amended the regulations in 9 CFR part 94 by adding Luxembourg to the list in § 94.18 of regions where bovine spongiform encephalopathy (BSE) exists. We took this action because BSE was detected in a cow born in Luxembourg.

Comments on the interim rule were required to be received on or before February 17, 1998. We did not receive any comments. Therefore, for the reasons given in the interim rule, we are adopting the interim rule as a final rule.

This action also affirms the information contained in the interim rule concerning Executive Orders 12866 and 12988 and the Paperwork Reduction Act.

Further, for this action, the Office of Management and Budget has waived the review process required by Executive Order 12866.

Regulatory Flexibility Act

This rule affirms an interim rule that amended the regulations by adding Luxembourg to the list of regions where BSE exists. We took this action because BSE was detected in a cow in Luxembourg. The effect of the interim rule was to prohibit the importation of ruminants that have been in Luxembourg and meat, meat products, and certain other products of ruminants that have been in Luxembourg. The interim rule was necessary to reduce the risk that BSE could be introduced into the United States.

The following analysis addresses the economic effect of this rule on small entities, as required by the Regulatory Flexibility Act.

BSE is a slowly progressing, fatal, degenerative disease that affects the central nervous system of cattle. The disease was first diagnosed in 1986 in Great Britain, where it is sometimes called ''mad cow disease.'' Infected animals may display changes in temperament, abnormal posture, incoordination and difficulty in rising, decreased milk production, and loss of body condition despite continued appetite. The causative agent of BSE is not completely characterized, and there is no treatment for the disease. At this time, the disease is not known to exist in the United States. There is no vaccine to prevent BSE nor is there a test to detect the disease in live animals. Given these factors, the import restrictions imposed by the interim rule are the most effective means available for ensuring that BSE does not enter the United States from Luxembourg.

Preventing the introduction of BSE into the United States is critical. In

addition to the potential threat to public health, BSE also has the potential to cause severe economic hardship for the U.S. livestock industry. Great Britain's experience with the disease provides an insight into how damaging BSE can be to livestock. Between November 1986 (when BSE was first diagnosed in Great Britain) and May 1996, an estimated 160,540 head of cattle in approximately 33,455 herds were diagnosed with BSE in Great Britain. The epidemic peaked there in January 1993, with almost 1,000 new cases per week. All of the animals in Great Britain showing signs of BSE, most of which were dairy cows between 3 and 5 years of age, were destroyed.

If BSE were introduced into the United States, livestock losses would likely be much greater than in Great Britain, because the United States raises more cattle. However, assuming the same number of cattle losses in the United States as in Great Britain (160,540), the introduction of BSE into the United States would cost U.S. livestock producers $189 million, based on the current price of $1,180 per head for dairy cows. The $189 million figure does not include higher production costs that would likely be incurred by U.S. producers, due to the presence of the disease.

U.S. export and consumer markets would also be affected. The United States currently restricts the importation of live ruminants and ruminant products from all regions where BSE is known to exist and from regions that present an undue risk of introducing BSE into the United States due to import requirements less restrictive than those that would be acceptable for import into the United States and/or because of inadequate surveillance. Presumably, if BSE were introduced into the United States, other regions would adopt similar restrictions on the exportation of live ruminants and ruminant products from the United States. Such restrictions by other regions would be devastating economically. In 1997, for example, the dollar value of U.S. exports of both bovine animals and bovine animal meat totaled $3.1 billion. Those export sales could be lost in their entirety. Consumers would incur higher costs due to higher prices for ruminant products and increased prices for competitive products, such as poultry.

We expect that restricting the importation of live ruminants and ruminant products from Luxembourg will have little or no effect on U.S. consumers. No ruminants were imported into the United States from Luxembourg in 1996. This is compared with U.S. imports of nearly 2 million cattle alone in the same year. There were no imports into the United States of fresh sheep or goat meat from Luxembourg in 1994, 1995, or 1996. Further, there were no imports into the United States of canned beef, sausage, and other prepared and preserved beef and veal from Luxembourg in 1996.

Placing Luxembourg on the list of regions where BSE is known to exist also restricts the importation of bones, products made from bone meal, blood meal, meat meal, offal, fat, glands, and serum from ruminants from this country. Little effect should be associated with any of these restrictions. Further, the importation into the United States of any pet or animal feed from Luxembourg that may contain ruminant products is restricted as a result of this action. Since the U.S. imported no animal feed from Luxembourg in 1994, 1995, or 1996, we expect that there will be very little or no effect on U.S. consumers as a result of this restriction.

Because Luxembourg is not a significant supply source for the U.S. market, restrictions on imports from Luxembourg should not have a significant effect on consumer prices in the United States.

Under these circumstances, the Administrator of the Animal and Plant Health Inspection Service has determined that this action will not have a significant economic impact on a substantial number of small entities.

List of Subjects in 9 CFR Part 94

Animal diseases, Imports, Livestock, Meat and meat products, Milk, Poultry and poultry products, Reporting and recordkeeping requirements.

PART 94—RINDERPEST, FOOT-AND-MOUTH DISEASE, FOWL PEST (FOWL PLAGUE), EXOTIC NEWCASTLE DISEASE, AFRICAN SWINE FEVER, HOG CHOLERA, AND BOVINE SPONGIFORM ENCEPHALOPATHY: PROHIBITED AND RESTRICTED IMPORTATIONS

Accordingly, we are adopting as a final rule, without change, the interim rule that amended 9 CFR part 94 and that was published at 62 FR 65999–66001 on December 17, 1997.

Authority: 7 U.S.C. 147a, 150ee, 161, 162, and 450; 19 U.S.C. 1306; 21 U.S.C. 111, 114a, 134a, 134b, 134c, 134f, 136, and 136a; 31 U.S.C. 9701; 42 U.S.C. 4331 and 4332; 7 CFR 2.22, 2.80, and 371.2(d).

Done in Washington, DC, this 8th day of October 1999.

Craig A. Reed,

Administrator, Animal and Plant Health Inspection Service.

[FR Doc. 99–26981 Filed 10–14–99; 8:45 am]

BILLING CODE 3410–34–P

DEPARTMENT OF AGRICULTURE

Animal and Plant Health Inspection Service

9 CFR Part 94

[Docket No. 97–115–2]

Change in Disease Status of Belgium Because of BSE

AGENCY: Animal and Plant Health Inspection Service, USDA.

ACTION: Affirmation of interim rule as final rule.

SUMMARY: We are adopting as a final rule, without change, an interim rule that added Belgium to the list of regions where bovine spongiform encephalopathy exists. We took this action because bovine spongiform encephalopathy was detected in a cow in Belgium. The effect of the interim rule was to prohibit the importation of ruminants that have been in Belgium and meat, meat products, and certain other products of ruminants that have been in Belgium. The interim rule was necessary to reduce the risk that bovine spongiform encephalopathy could be introduced into the United States.

EFFECTIVE DATE: The interim rule became effective on October 31, 1997.

FOR FURTHER INFORMATION CONTACT: Dr. John Cougill, Staff Veterinarian, Animal Products Program, National Center for Import and Export, VS, APHIS, 4700 River Road Unit 40, Riverdale, MD 20737–1231; (301) 734–3399; or e-mail: john.w.cougill@usda.gov.

SUPPLEMENTARY INFORMATION:

Background

In an interim rule effective October 31, 1997, and published in the **Federal Register** on November 18, 1997 (62 FR 61433–61434, Docket No. 97–115–1), we amended the regulations in 9 CFR part 94 by adding Belgium to the list in § 94.18 of regions where bovine spongiform encephalopathy (BSE) exists. We took this action because BSE was detected in a cow born in Belgium.

Comments on the interim rule were required to be received on or before January 20, 1998. We did not receive any comments. Therefore, for the reasons given in the interim rule, we are adopting the interim rule as a final rule.

This action also affirms the information contained in the interim rule concerning Executive Orders 12866 and 12988 and the Paperwork Reduction Act.

Further, for this action, the Office of Management and Budget has waived the review process required by Executive Order 12866.

Regulatory Flexibility Act

This rule affirms an interim rule that amended the regulations by adding Belgium to the list of regions where BSE exists. We took this action because BSE was detected in a cow in Belgium. The effect of the interim rule was to prohibit the importation of ruminants that have been in Belgium and meat, meat products, and certain other products of ruminants that have been in Belgium. The interim rule was necessary to reduce the risk that BSE could be introduced into the United States.

The following analysis addresses the economic effect of this rule on small entities, as required by the Regulatory Flexibility Act.

BSE is a slowly progressing, fatal, degenerative disease that affects the central nervous system of cattle. The disease was first diagnosed in 1986 in Great Britain, where it is sometimes called ''mad cow disease.'' Infected animals may display changes in temperament, abnormal posture, incoordination and difficulty in rising, decreased milk production, and loss of body condition despite continued appetite. The causative agent of BSE is not completely characterized, and there is no treatment for the disease. At this time, the disease is not known to exist in the United States. There is no vaccine to prevent BSE nor is there a test to detect the disease in live animals. Given these factors, the import restrictions imposed by the interim rule are the most effective means available for ensuring that BSE does not enter the United States from Belgium.

Preventing the introduction of BSE into the United States is critical. In addition to the potential threat to public health, BSE also has the potential to cause severe economic hardship for the U.S. livestock industry. Great Britain's experience with the disease provides an insight into how damaging BSE can be to livestock. Between November 1986 (when BSE was first diagnosed in Great Britain) and May 1996, an estimated 160,540 head of cattle in approximately 33,455 herds were diagnosed with BSE in Great Britain. The epidemic peaked there in January 1993, with almost 1,000 new cases per week. All of the animals in Great Britain showing signs of BSE, most of which were dairy cows between 3 and 5 years of age, were destroyed.

If BSE were introduced into the United States, livestock losses would likely be much greater than in Great Britain, because the United States raises more cattle. However, assuming the same number of cattle losses in the United States as in Great Britain (160,540), the introduction of BSE into the United States would cost U.S. livestock producers $189 million, based on the current price of $1,180 per head for dairy cows. The $189 million figure does not include higher production costs that would likely be incurred by U.S. producers, due to the presence of the disease.

U.S. export and consumer markets would also be affected. The United States currently restricts the importation of live ruminants and ruminant products from all regions where BSE is known to exist and from regions that present an undue risk of introducing BSE into the United States due to import requirements less restrictive than those that would be acceptable for import into the United States and/or because of inadequate surveillance. Presumably, if BSE were introduced into the United States, other regions would adopt similar restrictions on the exportation of live ruminants and ruminant products from the United States. Such restrictions by other regions would be devastating economically. In 1997, for example, the dollar value of U.S. exports of both bovine animals and bovine animal meat totaled $3.1 billion. Those export sales could be lost in their entirety. Consumers would incur higher costs due to higher prices for ruminant products and increased prices for competitive products, such as poultry.

We expect that restricting the importation of live ruminants and ruminant products from Belgium will have little or no effect on U.S. consumers. Fewer than 100 ruminants were imported into the United States from Belgium in 1996. This is compared with U.S. imports of nearly 2 million cattle alone in the same year. There were no imports into the United States of fresh sheep or goat meat from Belgium in 1994, 1995, or 1996. Further, there were no imports into the United States of canned beef, sausage, and other prepared and preserved beef and veal from Belgium in 1996.

Placing Belgium on the list of regions where BSE is known to exist also restricts the importation of bones, products made from bone meal, blood meal, meat meal, offal, fat, glands, and serum from ruminants from this country. Little effect should be associated with any of these restrictions. Further, the importation into the United States of any pet or animal feed from Belgium that may contain ruminant products is restricted as a result of this action. Since animal feed imported from Belgium in 1996 accounted for less than one half of one percent of total U.S. animal feed imports in that year, we expect that there will be very little or no effect on U.S. consumers as a result of this restriction.

Because Belgium is not a significant supply source for the U.S. market, restrictions on imports from Belgium should not have a significant effect on consumer prices in the United States.

Under these circumstances, the Administrator of the Animal and Plant Health Inspection Service has determined that this action will not have a significant economic impact on a substantial number of small entities.

List of Subjects in 9 CFR Part 94

Animal diseases, Imports, Livestock, Meat and meat products, Milk, Poultry and poultry products, Reporting and recordkeeping requirements.

PART 94—RINDERPEST, FOOT-AND-MOUTH DISEASE, FOWL PEST (FOWL PLAGUE), EXOTIC NEWCASTLE DISEASE, AFRICAN SWINE FEVER, HOG CHOLERA, AND BOVINE SPONGIFORM ENCEPHALOPATHY: PROHIBITED AND RESTRICTED IMPORTATIONS

Accordingly, we are adopting as a final rule, without change, the interim rule that amended 9 CFR part 94 and that was published at 62 FR 61433–61434 on November 18, 1997.

Authority: 7 U.S.C. 147a, 150ee, 161, 162, and 450; 19 U.S.C. 1306; 21 U.S.C. 111, 114a, 134a, 134b, 134c, 134f, 136, and 136a; 31 U.S.C. 9701; 42 U.S.C. 4331 and 4332; 7 CFR 2.22, 2.80, and 371.2(d).

Done in Washington, DC, this 8th day of October 1999.

Craig A. Reed,

Administrator, Animal and Plant Health Inspection Service.

[FR Doc. 99–26974 Filed 10–14–99; 8:45 am]

BILLING CODE 3410–34–P

DEPARTMENT OF TRANSPORTATION

Federal Aviation Administration

14 CFR Part 39

[Docket No. 98–ANE–31–AD; Amendment 39–11221; AD 99–15–02]

RIN 2120–AA64

Airworthiness Directives; Pratt & Whitney JT9D Series Turbofan Engines; Correction

AGENCY: Federal Aviation Administration, DOT.

ACTION: Final rule; correction.

SUMMARY: This document makes a correction to Airworthiness Directive (AD) 99–15–02 applicable to certain Pratt &Whitney (PW) JT9D series turbofan engines that was published in the **Federal Register** on July 16, 1999 (64 FR 38299). Part number (P/N) and service bulletin (SB) references in the compliance section are incorrect. This document corrects those references. In all other respects, the original document remains the same.

EFFECTIVE DATE: October 15, 1999.

FOR FURTHER INFORMATION CONTACT: Peter White, Aerospace Engineer, Engine Certification Office, FAA, Engine and Propeller Directorate, 12 New England Executive Park, Burlington, MA 01803–5299; telephone (781) 238–7128, fax (781) 238–7199.

SUPPLEMENTARY INFORMATION: A final rule airworthiness directive applicable to Pratt & Whitney (PW) JT9D–3A, –7, –7H, –7A, –7AH, –7F, –7J, –20, and –20J series turbofan engines, was published in the **Federal Register** on July 16, 1999 (64 FR 38299). The part number referenced in the AD should read 734514 instead of 734515. After performing the required actions on the flange, P/N 734514, the entire case becomes P/N 734515. Thus, there is no flange with P/N 734715, and the AD must be corrected to eliminate this typographical error. In addition, the Service Bulletin referenced for performing the inspections is changed to refer to the SB that contains the actual inspection procedure. ASB 6343 only refers to ASB 4482. The following correction is needed:

§ 39.13 [Corrected]

1. On page 38300, in the third column, in the Compliance Section, in paragraph (d), in the fifth line, ''P/N 734515'' is corrected to read ''P/N 734514''.

2. On page 38300, in the third column, in the Compliance Section, in paragraph (d), in the seventh and eighth line, ''PW ASB No. 6343 Revision 1, dated October 8, 1998'' is corrected to read ''PW SB No. 4482, Revision 1, dated July 8, 1976''.

3. On page 38300, in the third column, in the Compliance Section, in paragraph (e), in the second line, ''P/Ns 734515'' is corrected to read ''P/Ns 734514''.

Issued in Burlington, Massachusetts, on October 6, 1999.

Thomas A. Boudreau,

Acting Manager, Engine and Propeller Directorate, Aircraft Certification Service.

[FR Doc. 99–26710 Filed 10–14–99; 8:45 am]

BILLING CODE 4910–13–U

DEPARTMENT OF TRANSPORTATION

Federal Aviation Administration

14 CFR Part 71

[Airspace Docket No. 99–ASO–14]

Amendment to Class D and Establishment of Class E2 Airspace; Fort Rucker, AL

AGENCY: Federal Aviation Administration (FAA), DOT.

ACTION: Final rule.

SUMMARY: This amendment modifies Class D airspace and establishes Class E2 airspace at Fort Rucker, AL. The control tower at Cairns Army Airfield is open 0600–0100 daily. Therefore, the Class D airspace hours of operation are amended from continuous to part time. This action requires establishment of Class E2 surface area airspace when the tower is closed and approach control service is provided by Cairns Army Radar Approach Control Facility.

EFFECTIVE DATE: 0901 UTC, December 30, 1999.

FOR FURTHER INFORMATION CONTACT: Nancy B. Shelton, Manager, Airspace Branch, Air Traffic Division, Federal Aviation Administration, P.O. Box 20636, Atlanta, Georgia 30320; telephone (404) 305–5627.

SUPPLEMENTARY INFORMATION:

History

On August 18, 1999, the FAA proposed to amend part 71 of the Federal Aviation Regulations (14 CFR part 71) by amending Class D hours of operation and establishing Class E2 airspace at Fort Rucker, AL, (64 FR 44865). This amendment modifies Class D hours of operation and establishes Class E2 surface area airspace at Fort Rucker, AL. Designations for Class D airspace extending upward from the surface of the earth and Class E airspace designated as surface areas are published in FAA Order 7400.9G dated September 1, 1999, and effective September 16, 1999, which is incorporated by reference in 14 CFR part 71.1. The Class D and Class E2 designations listed in this document will be published subsequently in the Order.

Interested parties were invited to participate in this rulemaking proceeding by submitting written comments on the proposal to the FAA. No comments objecting to the proposal were received.

The Rule

This amendment to part 71 of the Federal Aviation Regulations (14 CFR part 71) amends Class D hours of operation and establishes Class E2 surface area airspace at Cairns Army Airfield, Fort Rucker, AL.

The FAA has determined that this regulation only involves an established body of technical regulations for which frequent and routine amendment are necessary to keep them operationally current. It, therefore, (1) is not a ''significant regulatory action'' under Executive Order 12866; (2) is not a ''significant rule'' under DOT Regulatory Policies and Procedures (44 FR 10034; February 26, 1979); and (3) does not warrant preparation of a Regulatory Evaluation, as the anticipated impact is so minimal. Since this is a routine matter that will only affect air traffic procedures and air navigation, it is certified that this rule will not have significant economic impact on a substantial number of small entities under the criteria of the Regulatory Flexibility Act.

List of Subjects in 14 CFR Part 71

Airspace, Incorporation by reference, Navigation (air).

Adoption of the Amendment

In consideration of the foregoing, the Federal Aviation Administration amends 14 CFR part 71 as follows:

PART 71—DESIGNATION OF CLASS A, CLASS B, CLASS C, CLASS D, AND CLASS E AIRSPACE AREAS; AIRWAYS; ROUTES; AND REPORTING POINTS

1. The authority citation for 14 CFR part 71 continues to read as follows:

Authority: 49 U.S.C. 106(g), 40103, 40113, 40120; EO 10854, 24 FR 9565, 3 CFR, 1959–1963 Comp., p. 389.

§ 71.1 [Amended]

2. The incorporation by reference in 14 CFR 71.1 of Federal Aviation Administration Order 7400.9G, Airspace

Designations and Reporting Points, dated September 1, 1999, and effective September 16, 1999, is amended as follows:

Paragraph 5000 Class D Airspace

* * * * *

ASO AL D Fort Rucker, AL [Revised]

Cairns Army Air Field, AL
(Lat. 31°16′37″N, long. 85°42′36″W)

That airspace extending upward from the surface to and including 2, 800 feet MSL within a 5-mile radius of lat. 31°18′30″N, long. 85°42′20″W. This Class D airspace area is effective during the specific dates and times establised in advance by a Notice to Airmen. The effective date and time will thereafter be continuously published in the DOD IFR—Supplement Airport/Facility Directory.

* * * * *

Paragraph 6002 Class E Airspace Designated as Surface Area

* * * * *

ASO AL E2 Fort Rucker, AL [New]

Within a 5-mile radius of lat. 31°18′30″N, long 85°42′20″W. This Class E surface area airspace is effective during the specific days and times established in advance by a Notice to Airmen. The effective days and times will thereafter be continuously published in the DOD IFR—Supplement Airport/Facility Directory.

* * * * *

Issued in College Park, Georgia, on September 24, 1999.

Nancy B. Shelton,

Acting Manager, Air Traffic Division Southern Region.

[FR Doc. 99–26949 Filed 10–14–99; 8:45 am]

BILLING CODE 4910–13–M

DEPARTMENT OF TRANSPORTATION

Federal Aviation Administration

14 CFR Part 71

[Airspace Docket No. 99–AWP–12]

Establishment of Class E Airspace; Fort Bragg, CA

AGENCY: Fedral Aviation Administration (FAA), DOT.

ACTION: Final rule.

SUMMARY: This action establishes a Class E airspace area at Fort Bragg, CA. The establishment of a Special Global Positioning System (GPS) Standard Instrument Approach Procedure (SIAP) Copter 158 Point In Space approach serving Mendocino Coast District Hospital Heliport has made this action necessary. Controlled airspace extending upward from 700 feet or more above the surface of the earth is needed to contain helicopters executing the Special Copter GPS 158 Point In Space approach to Mendocino Coast District Hospital Heliport. The intended effect of this action is to provide adequate controlled airspace for Instrument Flight Rules (IFR) operations at Mendocino Coast District Hospital Heliport, Fort Bragg, CA.

EFFECTIVE DATE: 0901 UTC November 4, 1999.

FOR FURTHER INFORMATION CONTACT: Larry Tonish, Airspace Specialist, Airspace Branch, AWP–520, Air Traffic Division, Western-Pacific Region, Federal Aviation Administration, 15000 Aviation Boulevard, Lawndale, California 90261, telephone (310) 725–6539.

SUPPLEMENTARY INFORMATION:

History

On August 13, 1999, the FAA proposed to amend 14 CFR part 71 by establishing a Class E airspace area at Fort Bragg, CA (64 FR 44141). Controlled airspace extending upward from 700 feet above the surface is needed to contain helicopters executing the Special Copter GPS 158 Point In Space approach at the Mendocino Coast District Hospital Heliport. This action will provide adequate controlled airspace for IFR operations at the Mendocino Coast District Hospital Heliport, Fort Bragg, CA.

Interested parties were invited to participate in this rulemaking proceeding by submitting written comments on the proposal to the FAA. No comments to the proposal were received. Class E airspace designations for airspace extending from 700 feet or more above the surface of the earth are published in paragraph 6005 of FAA Order 7400.9G dated September 1, 1999, and effective September 16, 1999, which is incorporated by reference in 14 CFR 71.1. The Class E airspace designation listed in this document will be published subsequently in the Order.

The Rule

This amendment to 14 CFR part 71 establishes a Class E airspace area at Fort Bragg, CA. Controlled airspace extending upward from 700 feet above the surface is required for helicopters executing the Special Copter GPS 158 Point In Space approach to the Mendocino Coast District Hospital Heliport. The effect of this action will provide adequate airspace for helicopters executing the Special Copter GPS 158 Point In Space approach to the Mendocino Coast District Hospital Heliport, Fort Bragg, CA.

The FAA has determined that this regulation only involves an established body of technical regulations for which frequent and routine amendments are necessary to keep them operationally current. Therefore, this regulation—(1) is not a ''significant regulatory action'' under Executive Order 12866; (2) is not a ''significant rule'' under DOT Regulatory Policies and Procedures (44 FR 11034; February 26, 1979); and (3) does not warrant preparation of a Regulatory Evaluation as the anticipated impact is so minimal. Since this is a routine matter that will only affect air traffic procedures and air navigation, it is certified that this rule will not have a significant economic impact on a substantial number of small entities under the criteria of the Regulatory Flexibility Act.

List of Subjects in 14 CFR Part 71

Airspace, Incorporation by reference, Navigation (air).

Adoption of the Amendment

In consideration of the foregoing, the Federal Aviation Administration amends 14 CFR part 17 as follows:

PART 71—DESIGNATION OF CLASS A, CLASS B, CLASS C, CLASS D, AND CLASS E AIRSPACE AREAS; ROUTES; AND REPORTING POINTS

1. The authority citation for 14 CFR part 71 continues to read as follows:

Authority: 49 U.S.C. 106(g), 40103, 40113, 40120; E.O. 10854, 24 FR 9565, 3 CFR, 1959–1963 Comp., p. 389; 14 CFR 11.69.

§ 71.1 [Amended]

2. The incorporation by reference in 14 CFR 71.1 of the Federal Aviation Administration Order 7400.9G, Airspace Designations and Reporting Points, dated September 1, 1999, and effective September 16, 1999, is amended as follows:

Paragraph 6005 Class E airspace areas extending upward from 700 feet or more above the surface of the earth.

* * * * *

AWP CA E5 Fort Bragg, CA [New]

Mendocino Coast District Hospital Heliport, CA Point In Space Coordinates
(Lat. 39°26′34″N, long. 123°48′04″W)

That airspace extending upward from 700 feet above the surface within a 6-mile radius or the Point In Space serving the Mendocino Coast District Hospital Heliport.

* * * * *

Issued in Los Angeles, California, on September 23, 1999.

John Clancy,

Manager, Air Traffic Division, Western-Pacific Region.

[FR Doc. 99–26950 Filed 10–14–99; 8:45 am]

BILLING CODE 4910–13–M

DEPARTMENT OF TRANSPORTATION

Federal Aviation Administration

14 CFR Part 71

[Airspace Docket No. 99–AWP–13]

Establishment of Class E Airspace; Gualala, CA

AGENCY: Federal Aviation Administration (FAA), DOT.

ACTION: Final rule.

SUMMARY: This action establishes a Class E airspace area at Gualala, CA. The establishment of a Special Global Positioning System (GPS) Standard Instrument Approach Procedure (SIAP) Copter 015 Point In Space approach serving Redwood Coast Medical Services Hospital Heliport has made this action necessary. Controlled airspace extending upward from 700 feet or more above the surface of the earth is needed to contain helicopters executing the Special Copter GPS 015 Point In Space approach to Redwood Coast Medical Services Hospital Heliport. The intended effect of this action is to provide adequate controlled airspace for Instrument Flight Rules (IFR) operations at Redwood Coast Medical Services Hospital Heliport, Gualala, CA.

EFFECTIVE DATE: 0901 UTC November 4, 1999.

FOR FURTHER INFORMATION CONTACT: Larry Tonish, Airspace Specialist, Airspace Branch, AWP–520, Air Traffic Division, Western-Pacific Region, Federal Aviation Administration, 15000 Aviation Boulevard, Lawndale, California 90261, telephone (310) 725–6539.

SUPPLEMENTARY INFORMATION:

History

On August 13, 1999, the FAA proposed to amend 14 CFR part 71 by establishing a Class E airspace area at Gualala, CA (64 FR 44144). Controlled airspace extending upward from 700 feet above the surface is needed to contain helicopters executing the Special Copter GPS 015 Point In Space approach at the Redwood Coast Medical Services Hospital Heliport. This action will provide adequate controlled airspace for IFR operations at the Redwood Coast Medical Services Hospital Heliport, Gualala, CA.

Interested parties were invited to participate in this rulemaking proceeding by submitting written comments on the proposal to the FAA. No comments to the proposal were received. Class E airspace designations for airspace extending from 700 feet or more above the surface of the earth are published in paragraph 6005 of FAA Order 7400.9G dated September 1, 1999, and effective September 16, 1999, which is incorporated by reference in 14 CFR 71.1. The Class E airspace designation listed in this document will be published subsequently in the Order.

The Rule

This amendment to 14 CFR part 71 establishes a Class E airspace area at Gualala, CA. Controlled airspace extending upward from 700 feet above the surface is required for helicopters executing the Special Copter 015 Point In Space approach at the Redwood Coast Medical Services Hospital Heliport. The effect of this action will provide adequate airspace for helicopters executing the Special Copter GPS 015 Point In Space approach at the Redwood Coast Medical Services Hospital Heliport, Gualala, CA.

The FAA has determined that this regulation only involves an established body of technical regulations for which frequent and routine amendments are necessary to keep them operationally current. Therefore, this regulation—(1) is not a ''significant regulatory action'' under Executive Order 12866; (2) is not a ''significant rule'' under DOT Regulatory Policies and Procedures (44 FR 11034; February 26, 1979); and (3) does not warrant preparation of a Regulatory Evaluation as the anticipated impact is so minimal. Since this is a routine matter that will only affect air traffic procedures and air navigation, it is certified that this rule will not have a significant economic impact on a substantial number of small entities under the criteria of the Regulatory Flexibility Act.

List of Subjects in 14 CFR Part 71

Airspace, Incorporation by reference, Navigation (air).

Adoption of the Amendment

In consideration of the foregoing, the Federal Aviation Administration amends 14 CFR part 71 as follows:

PART 71—DESIGNATION OF CLASS A, CLASS B, CLASS C, CLASS D, AND CLASS E AIRSPACE AREAS; ROUTES; AND REPORTING POINTS

1. The authority citation for 14 CFR part 71 continues to read as follows:

Authority: 49 U.S.C. 106(g), 40103, 40113, 40120; E.O. 10854, 24 FR 9565, 3 CFR, 1959–1963 Comp., p. 389; 14 CFR 11.69.

§ 71.1 [Amended]

2. The incorporation by reference in 14 CFR 71.1 of the Federal Aviation Administration Order 7440.9G, Airspace Designations and Reporting Points, dated September 1, 1999, and effective September 16, 1999, is amended as follows:

Paragraph 6005 Class E airspace areas extending upward from 700 feet or more above the surface of the earth.

* * * * *

AWP CA E5 Gualala, CA [New]

Redwood Coast Medical Services Hospital Heliport, CA Point In Space Coordinates (Lat. 38°45′31″N, long. 123°32′20″W)

That airspace extending upward from 700 feet above the surface within a 6-mile radius of the Point In Space serving the Redwood Coast Medical Services Hospital Heliport.

* * * * *

Issued in Los Angeles, California, on September 23, 1999.

John Clancy,

Manager, Air Traffic Division, Western-Pacific Region.

[FR Doc. 99–26948 Filed 10–14–99; 8:45 am]

BILLING CODE 4910–13–M

DEPARTMENT OF TRANSPORTATION

Federal Aviation Administration

14 CFR Part 71

[Airspace Docket No. 99–AWP–16]

Establishment of Class E Airspace; Lakeport, CA

AGENCY: Federal Aviation Administration (FAA), DOT.

ACTION: Final rule.

SUMMARY: This action establishes a Class E airspace area at Lakeport, CA. The establishment of a Special Global Positioning System (GPS) Standard Instrument Approach Procedure (SIAP) Copter 293 Point In Space approach serving Sutter Lakeside Hospital Heliport has made this action necessary. Controlled airspace extending upward from 700 feet or more above the surface of the earth is needed to contain helicopters executing the Special Copter GPS 293 Point In Space approach to Sutter Lakeside Hospital Heliport. The intended effect of this action is to provide adequate controlled airspace for Instrument Flight Rules (IFR) operations at the Sutter Lakeside Hospital Heliport, Lakeport, CA.

EFFECTIVE DATE: 0901 UTC November 4, 1999.

FOR FURTHER INFORMATION CONTACT: Larry Tonish, Airspace Specialist, Airspace Branch, AWP–520, Air Traffic Division, Western-Pacific Region, Federal Aviation Administration, 15000 Aviation Boulevard, Lawndale,

California 90261, telephone (310) 725–6539.

SUPPLEMENTARY INFORMATION:

History

On August 31, 1999, the FAA proposed to amend 14 CFR part 71 by establishing a Class E airspace area at Lakeport, CA (64 FR 47451). Controlled airspace extending upward from 700 feet above the surface is needed to contain helicopters executing the Special Copter GPS 293 Point In Space approach at the Sutter Lakeside Hospital Heliport. This action will provide adequate controlled airspace for IFR operations at the Sutter Lakeside Hospital Heliport, Lakeport, CA.

Interested parties were invited to participate in this rulemaking proceeding by submitting written comments on the proposal to the FAA. No comments to the proposal were received. Class E airspace designations for airspace extending from 700 feet or more above the surface of the earth are published in paragraph 6005 of FAA Order 7400.9G dated September 1, 1999, and effective September 16, 1999, which is incorporated by reference in 14 CFR 71.1. The Class E airspace designation listed in this document will be published subsequently in the Order.

The Rule

This amendment to 14 CFR part 71 establishes a Class E airspace area at Lakeport, CA. Controlled airspace extending upward from 700 feet above the surface is required for helicopters executing the Special Copter GPS 293 Point In Space approach to the Sutter Lakeside Hospital Heliport. The effect of this action will provide adequate airspace for helicopters executing the Special Copter GPS 293 Point In Space approach to the Sutter Lakeside Hospital Heliport, Lakeport, CA.

The FAA has determined that this regulation only involves an established body of technical regulations for which frequent and routine amendments are necessary to keep them operationally current. Therefore, this regulation—(1) is not a ''significant regulatory action'' under Executive Order 12866; (2) is not a ''significant rule'' under DOT Regulatory Policies and Procedures (44 FR 11034; February 26, 1979); and (3) does not warrant preparation of a Regulatory Evaluation as the anticipated impact is so minimal. Since this is a routine matter that will only affect air traffic procedures and air navigation, it is certified that this rule will not have a significant economic impact on a substantial number of small entities under the criteria of the Regulatory Flexibility Act.

List of Subjects in 14 CFR Part 71

Airspace, Incorporation by reference, Navigation (air).

Adoption of the Amendment

In consideration of the foregoing, the Federal Aviation Administration amends 14 CFR part 71 as follows:

PART 71—DESIGNATION OF CLASS A, CLASS B, CLASS C, CLASS D, AND CLASS E AIRSPACE AREAS; ROUTES; AND REPORTING POINTS

1. The authority citation for 14 CFR part 71 continues to read as follows:

Authority: 49 U.S.C. 106(g), 40103, 40113, 40120; E.O. 10854, 24 FR 9565, 3 CFR, 1959–1963 Comp., p. 389; 14 CFR 11.69.

§ 71.1 [Amended]

2. The incorporation by reference in 14 CFR 71.1 of the Federal Aviation Administration Order 7400.9G, Airspace Designations and Reporting Points, dated September 1, 1999, and effective September 16, 1999, is amended as follows:

Paragraph 6005 Class E airspace areas extending upward from 700 feet or more above the surface of the earth.

* * * * *

AWP CA E5 Lakeport, CA [New]

Sutter Lakeside Hospital Heliport, CA Point In Space Coordinates
(Lat. 39°06′09″N, long. 122°53′19″W)

That airspace extending upward from 700 feet above the surface within a 5-mile radius of the Point In Space serving the Sutter Lakeside Hospital Heliport.

* * * * *

Issued in Los Angeles, California, on September 23, 1999.

John Clancy,

Manager, Air Traffic Division, Western-Pacific Region.

[FR Doc. 99–26947 Filed 10–14–99; 8:45 am]

BILLING CODE 4910–13–M

DEPARTMENT OF TRANSPORTATION

Federal Aviation Administration

14 CFR Part 71

[Airspace Docket No. 99–AWP–15]

Establishment of Class E Airspace; Clearlake, CA

AGENCY: Federal Aviation Administration (FAA), DOT.

ACTION: Final rule.

SUMMARY: This action establishes a Class E airspace area at Clearlake, CA. The establishment of a Special Global Positioning System (GPS) Standard Instrument Approach Procedure (SIAP) Copter 321 Point In Space approach serving Redbud Community Hospital Heliport has made this action necessary. Controlled airspace extending upward from 700 feet or more above the surface of the earth is needed to contain helicopters executing the Special Copter GPS 321 Point In Space approach to Redbud Community Hospital Heliport. The intended effect of this action is to provide adequate controlled airspace for Instrument Flight Rules (IFR) operations at the Redbud Community Hospital Heliport, Clearlake, CA.

EFFECTIVE DATE: 0901 UTC November 4, 1999.

FOR FURTHER INFORMATION CONTACT: Larry Tonish, Airspace Specialist, Airspace Branch, AWP–520, Air Traffic Division, Western-Pacific Region, Federal Aviation Administration, 15000 Aviation Boulevard, Lawndale, California 90261, telephone (310) 725–6539.

SUPPLEMENTARY INFORMATION:

History

On August 13, 1999, the FAA proposed to amend 14 CFR part 71 by establishing a Class E airspace area at Clearlake, CA (64 FR 44140). Controlled airspace extending upward from 700 feet above the surface is needed to contain helicopters executing the Special Copter GPS 321 Point In Space approach at the Redbud Community Hospital Heliport. This action will provide adequate controlled airspace for IFR operations at the Redbud Community Hospital Heliport, Clearlake, CA.

Interested parties were invited to participate in this rulemaking proceeding by submitting written comments on the proposal to the FAA. No comments to the proposal were received. Class E airspace designations for airspace extending from 700 feet or more above the surface of the earth are published in paragraph 6005 of FAA Order 7400.9G dated September 1, 1999, and effective September 16, 1999, which is incorporated by reference in 14 CFR 71.1. The Class E airspace designation listed in this document will be published subsequently in the Order.

The Rule

This amendment to 14 CFR part 71 establishes a Class E airspace area at Clearlake, CA. Controlled airspace extending upward from 700 feet above the surface is required for helicopters executing the Special Copter GPS 321 Point In Space approach to the Redbud Community Hospital Heliport. The effect of this action will provide adequate airspace for helicopters

executing the Special Copter GPS 321 Point In Space approach to the Redbud Community Hospital Heliport, Clearlake, CA.

The FAA has determined that this regulation only involves an established body of technical regulations for which frequent and routine amendments are necessary to keep them operationally current. Therefore, this regulation—(1) is not a ''significant regulatory action'' under Executive Order 12866; (2) is not a ''significant rule'' under DOT Regulatory Policies and Procedures (44 FR 11034; February 26, 1979); and (3) does not warrant preparation of a Regulatory Evaluation as the anticipated impact is so minimal. Since this is a routine matter that will only affect air traffic procedures and air navigation, it is certified that this rule will not have a significant economic impact on a substantial number of small entities under the criteria of the Regulatory Flexibility Act.

List of Subjects in 14 CFR Part 71

Airspace, Incorporation by reference, Navigation (air).

Adoption of the Amendment

In consideration of the foregoing, the Federal Aviation Administration amends 14 CFR part 71 as follows:

PART 71—DESIGNATION OF CLASS A, CLASS B, CLASS C, CLASS D, AND CLASS E AIRSPACE AREAS; ROUTES; AND REPORTING POINTS.

1. The authority citation for 14 CFR part 71 continues to read as follows:

Authority: 49 U.S.C. 106(g), 40103, 40113, 40120; E. O. 10854, 24 FR 9565, 3 CFR,, 1959–1963 Comp., p. 389; 14 CFR 11.69.

§ 71.1 [Amended]

2. The incorporation by reference in 14 CFR 71.1 of the Federal Aviation Administration Order 7400.9G, Airspace Designations and Reporting Points, dated September 1, 1999, and effective September 16, 1999, is amended as follows:

Paragraph 6005 Class E airspace areas extending upward from 700 feet or more above the surface of the earth.

* * * * *

AWP CA E5 Clearlake, CA [New]

Redbud Community Hospital Heliport, CA
Point In Space Coordinates
(Lat. 38°55′01″ N, long. 122°36′42″ W)

That airspace extending upward from 700 feet above the surface within a 6-mile radius of the Point In Space serving the Redbud Community Hospital Heliport.

* * * * *

Issued in Los Angeles, California, on September 23, 1999.

John Clancy

Manager, Air Traffic Division, Western-Pacific Region

[FR Doc. 99–26946 Filed 10–14–99; 8:45 am]

BILLING CODE 4910–13–M

DEPARTMENT OF TRANSPORTATION

Federal Aviation Administration

14 CFR Part 71

[Airspace Docket No. 99–AWP–17]

Establishment of Class E Airspace; Napa, CA

AGENCY: Federal Aviation Administration (FAA), DOT.

ACTION: Final rule.

SUMMARY: This action establishes a Class E airspace area at Napa, CA. The establishment of a Special Global Positioning System (GPS) Standard Instrument Approach Procedure (SIAP) Copter 050 Point In Space approach serving Queen of the Valley Hospital Heliport has made this action necessary. Controlled airspace extending upward from 700 feet or more above the surface of the earth is needed to contain helicopters executing the Special Copter GPS 050 Point In Space approach to Queen of the Valley Hospital Heliport. The intended effect of this action is to provide adequate controlled airspace for Instrument Flight Rules (IFR) operations at the Queen of the Valley Hospital Heliport, Napa, CA.

EFFECTIVE DATE: 0901 UTC November 4, 1999.

FOR FURTHER INFORMATION CONTACT: Larry Tonish, Airspace Specialist, Airspace Branch, AWP–520, Air Traffic Division, Western-Pacific Region, Federal Aviation Administration, 15000 Aviation Boulevard, Lawndale, California 90261, telephone (310) 725–6539.

SUPPLEMENTARY INFORMATION:

History

On August 13, 1999, the FAA proposed to amend 14 CFR part 71 by establishing a Class E airspace area at Napa, CA (64 FR 44142). Controlled airspace extending upward from 700 feet above the surface is needed to contain helicopters executing the Special Copter GPS 050 Point In Space approach at the Queen of the Valley Hospital Heliport. This action will provide adequate controlled airspace for IFR operations at the Queen of the Valley Hospital Heliport, Napa, CA.

Interested parties were invited to participate in this rulemaking proceeding by submitting written comments on the proposal to the FAA. No comments to the proposal were received. Class E airspace designations for airspace extending from 700 feet or more above the surface of the earth are published in paragraph 6005 of FAA Order 7400.9G dated September 1, 1999, and effective September 16, 1999, which is incorporated by reference in 14 CFR 71.1. The Class E airspace designation listed in this document will be published subsequently in the Order.

The Rule

This amendment to 14 CFR part 71 establishes a Class E airspace area at Napa, CA. Controlled airspace extending upward from 700 feet above the surface is required for helicopters executing the Special Copter GPS 050 Point In Space approach to the Queen of the Valley Hospital Heliport. The effect of this action will provide adequate airspace for helicopters executing the Special Copter GPS 050 Point In Space approach to the Queen of the Valley Hospital Heliport, Napa, CA.

The FAA has determined that this regulation only involves an established body of technical regulations for which frequent and routine amendments are necessary to keep them operationally current. Therefore, this regulation—(1) is not a ''significant regulatory action'' under Executive Order 12866; (2) is not a ''significant rule'' under DOT Regulatory Policies and Procedures (44 FR 11034; February 26, 1969); and (3) does not warrant preparation of a Regulatory Evaluation as the anticipated impact is so minimal. Since this is a routine matter that will only affect air traffic procedures and air navigation, it is certified that this rule will not have a significant economic impact on a substantial number of small entities under the criteria of the Regulatory Flexibility Act.

List of Subjects in 14 CFR Part 71

Airspace, Incorporation by reference, Navigation (air).

Adoption of the Amendment

In consideration of the foregoing, the Federal Aviation Administration amends 14 CFR part 71 as follows:

PART 71—DESIGNATION OF CLASS A, CLASS B, CLASS C, CLASS D, AND CLASS E AIRSPACE AREAS; ROUTES; AND REPORTING POINTS.

1. The authority citation for 14 CFR part 71 continues to read as follows:

Authority: 49 U.S.C. 106(g), 40103, 40113, 40120; E.O. 10854, 24 FR 9565, 3 CFR, 1959–1963 Comp., p. 389; 14 CFR 11.69.

§ 71. [Amended]

2. The incorporation by reference in 14 CFR 71.1. of the Federal Aviation Administration Order 7400.9G, Airspace Designations and Reporting Points, dated September 1, 1999, and effective September 16, 1999, is amended as follows:

Paragraph 6005 Class E airspace areas extending upward from 700 feet or more above the surface of the earth.

* * * * *

AWP CA E5, Napa, CA [New]

Queen of the Valley Hospital Heliport, CA

Point In Space Coordinates
(Lat. 38°19′31″N, long. 122°18′53″W)

That airspace extending upward from 700 feet above the surface within a 5-mile radius of a Point In Space serving the Queen of the Valley Hospital Heliport.

* * * * *

Issued in Los Angeles, California, on September 23, 1999.

John Clancy,

Manager, Air Traffic Division, Western-Pacific Region.

[FR Doc. 99–26951 Filed 10–14–99; 8:45 am]

BILLING CODE 4910–13–M

DEPARTMENT OF TRANSPORTATION

Federal Aviation Administration

14 CFR Part 71

[Airspace Docket No. 99–AWP–14]

Establishment of Class E Airpsace; St. Helena, CA

AGENCY: Federal Aviation Administration (FAA), DOT.

ACTION: Final rule.

SUMMARY: This action establishes a Class E airpsace area at St. Helena, CA. The establishment of a Special Global Positioning System (GPS) Standard Instrument Approach Procedure (SIAP) Copter 293 Point In Space approach serving St. Helena Fire Department Heliport has made this action necessary. Controlled airspace extending upward from 700 feet or more above the surface of the earth is needed to contain helicopters executing the Special Copter GPS 293 Point In Space approach to St. Helena Fire Department Heliport. The intended effect of this action is to provide adequate controlled airspace for Instrument Flight Rules (IFR) operations at the St. Helena Fire Department Heliport, St. Helena, CA.

EFFECTIVE DATE: 0901 UTC November 4, 1999.

FOR FURTHER INFORMATION CONTACT: Larry Tonish, Airspace Specialist, Airspace Branch, AWP–520, Air Traffic Division, Western-Pacific Region, Federal Aviation Administration, 15000 Aviation Boulevard, Lawndale, California 90261, telephone (310) 725–6539.

SUPPLEMENTARY INFORMATION:

History

On August 13, 1999, the FAA proposed to amend 14 CFR part 71 by establishing a Class E airspace area at St. Helena, CA (64 FR 44139). Controlled airspace extending upward from 700 feet above the surface is needed to contain helicopters executing the Special Copter GPS 293 Point In Space approach at the St. Helena Fire Department Heliport. This action will provide adequate controlled airspace for IFR operations at the St. Helena Fire Department Heliport, St. Helena, CA.

Interested parties were invited to participate in this rulemaking proceeding by submitting written comments on the proposal to the FAA. No comments to the proposal were received. Class E airspace designations for airspace extending from 700 feet or more above the surface of the earth are published in paragraph 6005 of FAA Order 7400.9B dated September 1, 1999, and effective September 16, 1999, which is incorporated by reference in 14 CFR 71.1 The Class E airspace designation listed in this document will be published subsequently in the Order.

The Rule

This amendment to 14 CFR part 71 establishes a Class E airspace area at St. Helena, CA. Controlled airspace extending upward from 700 feet above the surface is required for helicopters executing the Special Copter GPS 293 Point In Space approach to the St. Helena Fire Department Heliport. The effect of this action will provide adequate airspace for helicopters executing the Special Copter GPS 293 Point In Space approach to the St. Helena Fire Department Heliport, St. Helena, CA.

The FAA has determined that this regulation only invovles an established body of technical regulations for which frequent and routine amendments are necessary to keep them operationally current. Therefore, this regulation—(1) is not a ''significant regulatory action'' under Executive Order 12866; (2) is not a ''significant rule'' under DOT Regulatory Policies and Procedures (44 FR 11034; February 26, 1979); and (3) does not warrant preparation of a Regulatory Evaluation as the anticipated impact is so minimal. Since this is a routine matter that will only affect air traffic procedures and air navigation, it is certified that this rule will not have a significant economic impact on a substantial number of small entities under the criteria of the Regulatory Flexibility Act.

List of Subjects in 14 CFR Part 71

Airspace, Incorporation by reference, Navigation (air).

Adoption of the Amendment

In consideration of the foregoing, the Federal Aviation Administration amends 14 CFR part 71 as follows:

PART 71—DESIGNATION OF CLASS A, CLASS B, CLASS C, CLASS D, AND CLASS E AIRSPACE AREAS; ROUTES; AND REPORTING POINTS.

1. The authority citation for 14 CFR part 71 continues to read as follows:

Authority: 49 U.S.C. 106(g), 40103, 40113, 40120; E. O. 10854, 24 FR 9565, 3 CFR, 1959–1963 Comp., p. 389; 14 CFR 11.69.

§ 71.1 [Amended]

2. The incorporation by reference in 14 CFR 71.1 of the Federal Aviation Administration Order 7400.9G, Airspace Designations and Reporting Points, dated September 1, 1999, and effective September 16, 1999, is amended as follows:

Paragraph 6005 Class E airspace areas extending upward from 700 feet or more above the surface of the earth

* * * * *

AWP CA E5 St. Helena, CA [New]

St. Helena Fire Department Heliport, CA

Point In Space Coordinates
(Lat. 38°32′21″ N, long. 122°29′35″ W)

That airspace extending upward from 700 feet above the surface within a 7-mile radius of the Point In Space serving the Mt. Helena Fire Department Heliport.

* * * * *

Issued in Los Angeles, California, on September 23, 1999.

John Clancy,

Manager, Air Traffic Division, Western-Pacific Region.

[FR Doc. 99–26952 Filed 10–14–99; 8:45 am]

BILLING CODE 4910–13–M

DEPARTMENT OF COMMERCE

National Oceanic and Atmospheric Administration

15 CFR Part 902

50 CFR Part 648

[Docket No. 990226056–9213–02; I.D. 122498C]

RIN 0648–AL31

Northeast Multispecies Fishery; Amendment 9 to the Northeast Multispecies Fishery Management Plan

AGENCY: National Marine Fisheries Service (NMFS), National Oceanic and Atmospheric Administration (NOAA), Commerce.

ACTION: Final rule.

SUMMARY: NMFS issues this final rule to implement the approved portions of Amendment 9 to the Northeast Multispecies Fishery Management Plan (FMP). This rule adds Atlantic halibut to the species managed under the FMP, implements a 1–fish per vessel halibut possession limit with a minimum size of 36 inches (66 cm); postpones implementation of the Vessel Monitoring System (VMS) requirement; modifies the framework process to allow for aquaculture projects and changes to the overfishing definitions (OFDs); and prohibits brush-sweep trawl gear when fishing for multispecies. The chief purpose of Amendment 9 is to address requirements of the Magnuson-Stevens Fishery Conservation and Management Act (Magnuson-Stevens Act), as amended by the Sustainable Fisheries Act (SFA).

DATES: This rule is effective November 15, 1999.

ADDRESSES: Copies of Amendment 9, its Regulatory Impact Review, and the Final Environmental Assessment are available from Paul J. Howard, Executive Director, New England Fishery Management Council, Suntaug Office Park, 5 Broadway (U.S. Route 1), Saugus, MA 01906–1097.

Copies of the Final Regulatory Flexibility Analysis (FRFA) are available from Patricia Kurkul, Regional Administrator, NMFS, Northeast Regional Office, 1 Blackburn Drive, Gloucester, MA 01930.

Comments regarding burden-hour estimates for the collection-of-information requirements contained in this final rule should be sent to the Regional Administrator and the Office of Information and Regulatory Affairs, Office of Management and Budget, Washington, DC 20503 (Attention: NOAA Desk Officer).

FOR FURTHER INFORMATION CONTACT: Regina L. Spallone, Fishery Policy Analyst, 978–281–9221.

SUPPLEMENTARY INFORMATION:

Background

Amendment 9 was prepared by the New England Fishery Management Council (Council) mainly to address requirements of the Magnuson-Stevens Act, as amended by the SFA on October 11, 1996, eliminate overfishing, and rebuild many of the groundfish stocks. Amendment 11 to the FMP identifies and describes essential fish habitat (EFH) of groundfish stocks as required by the SFA. NMFS approved Amendment 11 on behalf of the Secretary of Commerce (Secretary) on March 3, 1999. Background concerning the development of Amendment 9 was provided in the preamble of the notice of proposed rulemaking (64 FR 13952, March 23, 1999) and in the supplement to the proposed rule (64 FR 19111, April 19, 1999), and is not repeated here. This final rule implements approved measures contained in Amendment 9 to the FMP intended to eliminate overfishing and rebuild many of the groundfish stocks. Specifically, the measures establish new overfishing definitions (OFDs) for various groundfish species and stocks, add Atlantic halibut to the FMP's management unit to begin rebuilding this severely overfished stock, and prohibit brush sweep gear until the Council better understands its fishing efficiency given the overall short-term goal to reduce fishing effort. Implementation of the VMS requirement is postponed so the Council can address outstanding policy, equity, and operations issues.

On behalf of the Secretary, NMFS disapproved on April 7, 1999, two measures proposed in Amendment 9 after evaluation of the amendment, as authorized in section 304(a)(3) of the Magnuson-Stevens Act. The disapproved measures include an increase in the size limit for winter flounder for both the commercial and recreational fisheries to 13 inches (33.0 cm) from its current 12 inches (30.5 cm), and the OFD for the Gulf of Maine (GOM) winter flounder stock. Amendment 9 did not provide an OFD for GOM winter flounder. Since none was provided, the OFD does not meet the requirements of the SFA or the Magnuson-Stevens Act. NMFS has notified the Council that it should revise the OFD at the next available opportunity using the most recent assessment conducted at the 28th Stock Assessment Workshop (SAW–28).

Amendment 9 Measures

This final rule revises the regulations implementing the Northeast Multispecies FMP to add Atlantic halibut (*Hippoglossus hippoglossus*) to the management unit of the FMP and to implement management measures for that species. This rule implements a 1-fish halibut possession limit with a minimum size of 36 inches (66 cm); postpones implementation of the VMS requirement beyond May 1, 1999; modifies the framework process to allow for aquaculture projects and changes to the OFDs; and prohibits brush-sweep trawl gear when fishing for multispecies.

Comments and Responses

Eighteen written comments on Amendment 9 were received during the comment period established by the notice of availability of the amendment, which ended March 8, 1999. These comments were considered by NMFS in its decision to partially approve Amendment 9 on April 7, 1999. In addition, NMFS received two comments during the comment period specified for the proposed rule, which ended on May 3, 1999. Comments pertaining to both the amendment and the rule that were received during the respective comment periods are addressed here.

Comment 1: Several comments were received that did not support the increases in minimum fish size for winter flounder. Some of these comments stated that the size increases: (1) merely postpone mortality, rather than reduce it, (2) would have a disproportionate impact on participants west of 72°30', (3) are not consistent with mesh in place west of 72°30', (4) would increase discards, and (5) favor fishermen in Northern states at the expense of southerly fishermen. These commenters generally supported a 12–inch (30.5 cm) size limit west of 72°30', trip limits, limits on the length of trawl sweeps, and 6–inch (15.2 cm) codend in the Southern New England management area. At least one comment on this measure noted that the final report of SAW–28 indicated that this stock is not overfished, and that with no further management measures, the stock could rebuild in 2 to 5 years.

Response: On April 7, 1999, NMFS disapproved the size increases for winter flounder. The Council used preliminary information (the draft Atlantic States Marine Fisheries Commission assessment of winter flounder) to support the size increase. The final SAW–28 report was not complete or available at the time the

Council initially considered the increases. Draft documents for SAW–28 indicated the Southern New England/Mid-Atlantic stock is overfished and would benefit from mortality reduction. However, the final interpretation of the results with respect to the revised national standard 1 guidelines (63 FR 24212, May 1, 1998) indicated that the stock is not overfished, and that the mortality reduction is not necessary. Instead, the stock could rebuild to maximum sustainable yield (MSY) in 2 to 5 years under the management measures currently in place. Since a reduction is not necessary under the final assessment results, the costs imposed by the restrictive size limits are not justified. Therefore, this provision was disapproved.

Comment 2: One commenter supports a 13–inch (33–cm) fish size as an incentive not to use illegal net liners.

Response: While NMFS supports measures that would decrease illegal activity, NMFS found no compelling scientific or social benefit to increasing the fish size solely to achieve that goal. Further, revision to the interpretation of the SAW–28 results indicating that the stock is not overfished has changed the scientific basis used to support the proposed minimum fish size increases. As discussed in the response to Comment 1, NMFS has disapproved the measure.

Comment 3: One commenter supports a prohibition on brush-sweep (—streetsweeper'') trawl gear.

Response: NMFS agrees and approved this provision on April 7, 1999.

Comment 4: One commenter supported implementation of the VMS as soon as possible as an aid to enforcement, whereas another expressed concern and disappointment that NMFS was considering disapproval of the recommended VMS postponement, and urged approval of the delay.

Response: The mandatory use of VMS by individual days-at-sea (DAS) vessels was originally implemented under Amendment 5 to the FMP. At the time, the Administrator, Northeast Region, NMFS (Regional Administrator) authorized the alternative call-in system as a method of notification for these vessels until the VMS was determined operable. The VMS requirement was due to become effective May 1, 1999. For the reasons stated in the proposed rule, NMFS considered disapproving measures in Amendment 9 which would postpone implementation of the VMS requirement until the Council addresses outstanding policy, equity and operations issues. NMFS specifically invited comments from the public on the issue during its review. Upon completion of its review, NMFS concluded that the existing call-in system is adequate for the needs of the fishery and that the framework mechanism would be the appropriate place to re-initiate the program, should the Council resolve the outstanding issues listed above. NMFS approved the indefinite postponement of the VMS requirement for individual DAS vessels.

Comment 5: Several commenters expressed concern that Amendment 9 does not address bycatch. One supported a comprehensive bycatch review to address bycatch of unmanaged species, such as barndoor skate.

Response: NMFS and the Council are both active participants in the Atlantic Coastal Cooperative Statistics Program which is a long-term effort to improve the collection and utility of fisheries data - including bycatch. Currently, NMFS employs both the mandatory Vessel Trip Reports (VTRs) and information gathered in the Northeast Fisheries Observer Program. Both of these systems review discards of both managed and unmanaged species, as they are comprehensive. Assessment scientists have recently expanded their analysis of discards in stock assessments for some species.

NMFS recognizes that bycatch, as defined under the Magnuson-Stevens Act, can include both managed and unmanaged species. Measures contained in the FMP, such as DAS, fish sizes, closed areas, and mesh requirements, are designed to minimize bycatch and bycatch mortality. Specific measures adopted under Amendment 9, such as the 1–fish halibut possession limit, recognize that the multi-species nature of the fishery prevents complete cessation of bycatch. The Council believes that additional management measures regarding bycatch, beyond those adopted in Amendment 9, are impracticable and unnecessary at this time.

Regarding barndoor skate, this species is the focus of recent media attention but was not of special concern when the Council developed Amendment 9. As a result, the species was not added to the FMP's management unit under Amendment 9. However, the Council recently requested that NMFS designate it as the lead Council for skate management. NMFS will decide on the Council's request after inviting public comment on it.

Comment 6: One commenter stated that the Council did not accurately note the changes SFA made to the definition of —optimum'' as it relates to optimum yield (OY). The commenter points out that the Magnuson-Stevens Act defines ''optimum'' as the yield as reduced by relevant social, economic and ecological factors, and also requires that OY take into account protection of marine ecosystems. Thus, the commenter argues, Amendment 9 is deficient in that it ignores fishing gears' effect on marine ecosystems and relies solely on mortality and the use of landings as a proxy for mortality, which are not the same. The commenter does not support management by mortality reduction.

Response: The impacts of fishing gears' differential impacts on marine ecosystems, to the degree that they are known, were fully considered in Amendment 11 to the FMP. That discussion and its findings were found to be acceptable under the requirements of the SFA, and as a result, Amendment 11 was approved on March 3, 1999 (64 FR 199503, April 21, 1999). The OY specified in Amendment 9 was found to be in accordance with the SFA, and was approved on April 7, 1999. The Magnuson-Stevens Act allows for a multi-faceted approach to achievement of OY, including mortality reduction, which by definition includes the reduction of bycatch and bycatch mortality (bycatch is defined as fish that are harvested but not sold or kept for personal use), stock rebuilding, and habitat protection. The Council and NMFS have never defined mortality as synonymous with landings, as this comment letter states.

Comment 7: Two commenters do not support management by fishing mortality (F) reduction and instead support opening closed areas to jigging.

Response: Reduction of F to rebuild overfished stocks is an appropriate mechanism that has proven successful in the Northeast Multispecies FMP and other FMPs. Additionally, the commenters' suggestion of opening closed areas to jigging was not taken to public hearings for Amendment 9. Therefore, under Section 304 of the Magnuson-Stevens Act, NMFS could not implement such a measure in the final rule implementing the approved measures of Amendment 9. NMFS encourages the commenters to forward their suggestions to the Council for consideration under future FMP amendments.

Comment 8: Several comment letters were received on the EFH provisions. One commenter stated that EFH was not considered, and called Amendment 9 ''shallow avoidance.'' Another stated that Amendment 9 fails to comply with EFH provisions and interpreted statements in the Council's EFH omnibus Amendment (including Amendment 11 to the FMP) to indicate that Amendment 9 would contain provisions to satisfy the EFH

requirement of the Magnuson-Stevens Act.

Response: Amendment 11 to the FMP conducted a methodical evaluation of impact from fishing gears on EFH. That amendment indicated that some of the management measures contained in Amendment 9 that are designed to curb F will also serve to limit impacts on EFH. Those measures, therefore, warrant consideration in determining the Council's compliance with the requirements to minimize the effects of fishing on EFH, to the extent practicable. Amendment 11 includes the EFH information required by the Magnuson-Stevens Act and was approved by NMFS on March 3, 1999.

Comment 9: Several commenters did not specifically comment on any one measure or provision of Amendment 9, but expressed support for the small boat fleet of Cape Cod, and do not want regulations that would cause it undue harm.

Response: This comment did not specifically address any one provision of Amendment 9. Regardless, NMFS reviewed Amendment 9 for consistency with the national standards and other applicable law. The approved measures of Amendment 9 were found to be consistent with national standard 8, which specifies the measures shall, consistent with the conservation requirements of the Magnuson-Stevens Act (including the prevention of overfishing and rebuilding of overfished stocks), take into account the importance of fishery resources to fishing communities in order to provide for the sustained participation of such communities, and to the extent practicable, minimize adverse impacts on such communities. Management measures enacted by this rule will have few impacts on communities, the exceptions being the halibut restrictions and the brush-sweep trawl gear prohibition.

The Council drafted an Initial Regulatory Flexibility Analysis (IRFA) to examine impacts of the bush-sweep trawl gear prohibition, and 1–fish halibut possession limit. NMFS supplemented that analysis and considered the impact of Amendment 9 on small entities prior to making the decision to implement these measures. The IRFA includes a discussion of the various alternatives considered and rejected. This analysis is summarized in the Classification section and is incorporated within the FRFA for this final rule.

Comment 10: Several commenters found the OFDs confusing and difficult to understand. As a result, the commenters were unsure of the consequences of the OFDs. Further, one of the commenters questioned the stock definitions, and urged that the stock definitions be rejected and improved.

Response: NMFS acknowledges that the OFDs are very technical and, thus, can be confusing, particularly to the lay person. Consequently, NMFS has made every effort, where practicable, to encourage or employ the use of easily understood language. The purpose of these definitions is to aid managers in identifying the status of the stock relative to the goals of the FMPs, and to adopt measures to rebuild stocks (as appropriate) so that the stocks may produce the MSY on a continuing basis.

Stock definitions were approved with the original FMP adopting management measures for these species. The definitions were not revisited in Amendment 9 and, consequently, cannot be rejected at this time. The authority granted to NMFS is the approval, partial approval, or disapproval of the measures contained within Amendment 9.

Comment 11: One commenter supported the OFDs and is pleased that both a stock biomass component and an F component are included.

Response: Comment noted. NMFS approved the OFDs, except for GOM winter flounder, which was not included in the amendment. The OFDs are not described in this rule, which makes changes to the text of regulations implementing the FMP. While OFDs appear in the FMP, they do not appear in the regulations.

Comment 12: One commenter supported halibut conservation, and recommended a prohibition on halibut possession, rather than a 1–fish possession limit of 36 inches (91.4 cm).

Response: NMFS recognizes that this fishery is seriously depleted in comparison to historical levels. The measures approved in Amendment 9 will allow for the occasional incidental catch of halibut, but not a directed fishery for that species. However, a complete prohibition on halibut possession would not provide any substantive conservation benefits, since mortality would still occur due to incidental catch.

Changes from the Proposed Rule

To clarify the DAS notification requirements for vessels issued a limited access multispecies, occasional scallop, or combination permit, the regulations in §§ 648.4(c)(2)(iii), 648.10(b), and 648.14(c)(2) have been revised.

In § 648.10, paragraph (b) has been revised to incorporate the applicable requirements contained in the final rule implementing the Monkfish FMP (64 FR 54732, October 7, 1999).

Section headings for §§ 648.80, 648.83, 648.86, 648.88, and § 648.90 have been revised to reflect revisions contained in the final rule implementing the Monkfish FMP (64 FR 54732, October 7, 1999).

NMFS disapproved the fish size increases for winter flounder. As a result, the regulations proposed in §§ 648.83(a)(1) and 648.89(b)(1), as they relate to winter flounder only, have been removed from this final rule. The size limits for halibut that are specified in those same paragraphs, remain and are unchanged from the proposed rule.

NOAA codifies its OMB control numbers for information collection at 15 CFR part 902. Part 902 collects and displays the control numbers assigned to information collection requirements of NOAA by OMB pursuant to the Paperwork Reduction Act (PRA). This final rule codifies OMB control number 0648–0307 for § 648.10.

Under NOAA Administrative Order 205–11, dated December 17, 1990, the Under Secretary for Oceans and Atmosphere has delegated to the Assistant Administrator for Fisheries, NOAA, the authority to sign material for publication in the **Federal Register**.

Classification

The Administrator, Northeast Region, NMFS, determined that Amendment 9 is necessary for the conservation and management of the Northeast Multispecies fishery and that it is consistent with the Magnuson-Stevens Act and other applicable law, except for the disapproved provisions.

This final rule has been determined to be significant for the purposes of E.O. 12866.

Regulatory Flexibility Act

NMFS prepared an FRFA as part of the regulatory impact review, which describes the impact this rule would have on small entities. The FRFA is comprised of the IRFA and its supplement prepared by the Council, dated December 14, 1998, and supplement prepared by NMFS, dated January 27, 1999, public comments and responses that are included in this document, the analysis of impacts and alternatives in Amendment 9, and the summary that is included here.

The Council, in its IRFA, had determined that this action would not have a significant impact on a substantial number of small entities. However, NMFS concluded that a determination of non-significance could not be made because of the inability to identify the number of vessels that may

be impacted by measures in the proposed rule, namely the brush-sweep trawl gear prohibition, the 1–fish halibut possession limit, and the winter flounder fish size increase. In its supplement to the IRFA, NMFS revisited each of these measures and concluded that the degree of economic impacts on small entities varied depending on whether the number of vessels impacted includes all permitted vessels, all active vessels, or just those vessels directly impacted by a measure. A copy of the FRFA is available from NMFS (see **ADDRESSES**).

The following section discusses (1) the need for, and objectives, of the rule; (2) public comments on the IRFA; (3) the number of small entities to which the rule will apply; (4) reporting and recordkeeping requirements; (5) reasons for selecting the alternatives adopted in the final rule and rejecting the alternatives; and (6) the measures that minimize the economic impact of this action.

The need for, and objectives of, the rule are mainly to address requirements of the Magnuson-Stevens Act, as amended by the SFA on October 11, 1996, eliminate overfishing, and rebuild many of the groundfish stocks. Several comments were received that opposed regulations that caused undue harm to the Cape Cod small boat fleet. Those comments, and the agency's response, are summarized in the preamble. No changes were made to the rule as a result.

This rule prohibits the possession of brush-sweep trawl gear while in the possession of Northeast multispecies and fishing for, landing, or possessing Northeast multispecies harvested with brush-sweep trawl gear, unless the vessel has not been issued a multispecies permit and fishes for Northeast multispecies exclusively in state waters. This measure was selected in order to allow time to study the effect of this gear on habitat and to protect the integrity of the DAS system. The Council rejected the ''no-action'' alternative (no prohibition) because continued use of brush-sweep trawl gear may significantly increase trawl efficiency and thereby reduce the benefits of the FMP's effort reduction program. The potential number of vessels that would be impacted by the brush-sweep trawl gear prohibition is approximately 900 vessels, based on the number of permit holders, according to the NMFS Regional Office database, that fish for multispecies with otter trawl gear, and assuming all 900 vessels are currently using brush-sweep gear.

This action implements a 1–fish per vessel halibut possession limit with a minimum fish size of 36 inches (91.4 cm). These measures were selected to promote the rebuilding of this overfished resource. Alternatives to these measures that were considered but rejected were status quo (no action); a 1–fish possession limit with a maximum fish size of 48 inches (137.1 cm); a 1–fish possession limit combined with a maximum fish size of 48 inches (137.1 cm) and a minimum fish size of 36 inches (91.4 cm); and a total prohibition on halibut possession. The Council rejected the status quo alternative because of the need to reduce directed fishing mortality on this overfished resource. The Council rejected the maximum size provisions based on concerns that the associated discard mortality would negate the intended conservation benefits. The Council rejected a total prohibition as that measure would not provide any substantive conservation benefits, since mortality would still occur due to incidental catch.

The number of vessels affected by the proposed 1–fish halibut possession limit may amount to 1,050 vessels based on the number of permitted vessels in the multispecies fishery. This number includes active limited access multispecies permit holders (1,000) combined with a subset of one-half the estimated 100 active participants in the directed halibut fishery that do not possess a Federal fisheries permit. Active vessels (those that reported landings of halibut in recent years) are estimated to be only those vessels that caught at least one halibut (134 - 139 vessels) in 1996 or 1997.

The postponement of the VMS requirement (measure) mitigates impacts of this rule on small entities because they do not have to invest in VMS equipment at this time. The measure was selected, and the ''no action'' alternative (no postponement of VMS) was rejected, because of unresolved uncertainties regarding the equity among permit categories, system efficiency, and costs. Between 91 and 110 vessels that fished as Individual DAS vessels in 1998 would be required to have an operational VMS unit under the ''no-action'' alternative if those vessels remained in that permit category in 1999.

This rule also modifies the framework process to allow the Council to make recommendations on adjustments or additions to selected management measures and OFDs. Modification of the framework process will not have any immediate impact on small entities. Specific framework actions will be evaluated, including their economic impacts, when they are developed and proposed by the Council. The Council rejected the ''no-action'' alternative (no modification) as that would prevent the Council's use of the procedure to recommend timely adjustments or additions to management measures and OFDs.

NMFS disapproved the proposed fish size increases for winter flounder as inconsistent with the Magnuson-Stevens Act and other applicable law.

This rule contains information collection requirements subject to the Paperwork Reduction Act (PRA). The rule restates requirements concerning the installation of a vessel tracking system, documentation of installation of a vessel tracking system, declarations of a vessel being in or out of a fishery, and call-in systems.

Notwithstanding any other provision of law, no person is required to respond to nor shall a person be subject to a penalty for failure to comply with a collection of information subject to the requirements of the PRA unless that collection of information displays a currently valid OMB control number.

The requirement for installation of vessel tracking systems has been approved under OMB control number 0648-0307, with an estimated response time of 60 minutes. The other requirements have been approved under OMB control number 0648-0202, with an estimated response time of 2 minutes for each requirement.

The contents of this rule also affect two other information collection requirements. The requirement that a vessel must have a NE multispecies permit in order to land or possess one halibut will subject additional persons to the existing permit requirement approved under OMB number 0648-0202. Those persons who are newly subject to the permit requirement will also automatically be subject to the requirement that permit holders submit VTRs, a requirement which has been approved under OMB number 0648-0212. This request for the expanded coverage of these requirements has been approved by OMB. The estimated response time for these requirements is 35 minutes for the permit and 5 minutes per day for the logbook entries beyond those made in vessel logbooks as part of normal fishing operations and includes the time needed for reviewing instructions, searching existing data sources, gathering and maintaining the data needed, and completing and reviewing the collection of information. Send comments regarding these burden estimates or any other aspect of the data requirements, including suggestions for reducing the burden, to NMFS (see **ADDRESSES**) and to the Office of

Information and Regulatory Affairs, Office of Management and Budget, Washington, DC 20503 (ATTN: NOAA Desk Officer).

List of Subjects

15 CFR Part 902

Reporting and recordkeeping requirements.

50 CFR Part 648

Fisheries, Fishing, Reporting and recordkeeping requirements.

Dated: October 7, 1999.

Andrew A. Rosenberg,

Deputy Assistant Administrator for Fisheries, National Marine Fisheries Service.

For the reasons set out in the preamble, 15 CFR part 902, chapter IX, and 50 CFR part 648, chapter VI, are amended as follows:

15 CFR Chapter IX

PART 902--NOAA INFORMATION COLLECTION REQUIREMENTS UNDER THE PAPERWORK REDUCTION ACT; OMB CONTROL NUMBERS

1. The authority citation for part 902 continues to read as follows:

Authority: 44 U.S.C. 3501 *et seq.*

2. In § 902.1, the table in paragraph (b) is amended by revising under 50 CFR the following entry in numerical order:

§ 902.1 OMB control numbers assigned pursuant to the Paperwork Reduction Act.

* * * * *

(b) * * *

CFR part or section where the information collection requirement is located	Current OMB control number (all numbers begin with 0648-)
* * * * *	
50 CFR	
* * * * *	
648.10	-0202 and -0307
* * * * *	

50 CFR Chapter VI

PART 648—FISHERIES OF THE NORTHEASTERN UNITED STATES

1. The authority citation for part 648 continues to read as follows:

Authority: 16 U.S.C. 1801 *et seq.*

2. In § 648.2, the definition for ''Brush-sweep trawl gear'' is added, and the definitions for ''Nonregulated multispecies'' and ''Northeast (NE) multispecies or multispecies'' are revised to read as follows:

§ 648.2 Definitions.

* * * * *

Brush-sweep trawl gear means trawl gear consisting of alternating roller discs and bristle brushes that are strung along cables, chains, or footropes, and aligned together to form the sweep of the trawl net, designed to allow the trawl sweep to maintain contact with the ocean floor, or any modification to trawl gear that is substantially similar in design or effect.

* * * * *

Nonregulated multispecies means the subset of Northeast multispecies that includes silver hake, red hake, ocean pout, and Atlantic halibut.

Northeast (NE) multispecies or multispecies means the following species:

American plaice—*Hippoglossoides platessoides.*
Atlantic cod—*Gadus morhua.*
Atlantic halibut—*Hippoglossus hippoglossus.*
Haddock—*Melanogrammus aeglefinus.*
Ocean pout—*Macrozoarces americanus.*
Pollock—*Pollachius virens.*
Redfish—*Sebastes fasciatus.*
Red hake—*Urophycis chuss.*
Silver hake (whiting)—*Merluccius bilinearis.*
White hake—*Urophycis tenuis.*
Windowpane flounder—*Scophthalmus aquosus.*
Winter flounder—*Pleuronectes americanus.*
Witch flounder—*Glyptocephalus cynoglossus.*
Yellowtail flounder—*Pleuronectes ferrugineus.*

* * * * *

3. In § 648.4, paragraph (c)(2)(iii)(A) is revised to read as follows:

§ 648.4 Vessel and individual commercial permits.

* * * * *

(c) * * *

(2) * * *

(iii) * * *

(A) An application for a limited access multispecies permit must also contain the following information: For vessels fishing for NE multispecies with gillnet gear, with the exception of vessels fishing under the Small Vessel permit category, an annual declaration as either a Day or Trip gillnet vessel designation as described in § 648.82(k). A vessel owner electing a Day gillnet designation must indicate the number of gillnet tags that he/she is requesting and must include a check for the cost of the tags. A permit holder letter will be sent to the owner of each eligible gillnet vessel informing him/her of the costs associated with this tagging requirement and directions for obtaining tags. Once a vessel owner has elected this designation, he/she may not change the designation or fish under the other gillnet category for the remainder of the fishing year. Incomplete applications, as described in paragraph (e) of this section, will be considered incomplete for the purpose of obtaining authorization to fish in the NE multispecies gillnet fishery and will be processed without a gillnet authorization.

* * * * *

4. In § 648.10, paragraphs (b) and (d) are revised to read as follows:

§ 648.10 DAS notification requirements.

* * * * *

(b) *VMS Notification*. (1) A scallop vessel issued a full-time or part-time limited access scallop permit, or issued an occasional limited access permit when fishing under the Georges' Bank Sea Scallop Exemption Program specified under § 648.58, or a scallop vessel fishing under the small dredge program specified in § 648.51(e), or a vessel issued a limited access multispecies, monkfish, occasional scallop, or combination permit whose owner elects to provide the notifications required by this paragraph (b) using the VMS specified in paragraph (b) of this section, unless otherwise authorized or required by the Regional Administrator under paragraph (d) of this section, must have installed on board an operational VMS unit that meets the minimum performance criteria specified in § 648.9(b) or as modified in § 648.9(a). The owner of such a vessel must provide documentation to the Regional Administrator at the time of application for a limited access permit that the vessel has an operational VMS unit installed on board that meets those criteria. If a vessel has already been issued a limited access permit without the owner providing such documentation, the Regional Administrator shall allow at least 30 days for the vessel to install an operational VMS unit that meets the criteria and for the owner to provide documentation of such installation to the Regional Administrator. A vessel that is required to, or whose owner has elected to, use a VMS unit is subject to the following requirements and presumptions:

(i) A vessel that have crossed the VMS Demarcation Line specified under paragraph (a) of this section is deemed to be fishing under the DAS program, unless the vessel's owner or authorized representative declares the vessel out of the scallop or NE multispecies, or monkfish fishery, as applicable, for a specific time period by notifying the Regional Administrator through the VMS prior to the vessel leaving port.

(ii) A part-time scallop vessel may not fish in the DAS allocation program unless it declares into the scallop fishery for a specific time period by notifying the Regional Administrator through the VMS.

(iii) Notification that the vessel is not under the DAS program must be received prior to the vessel leaving port. A vessel may not change its status after the vessel leaves port or before it returns to port on any fishing trip.

(iv) DAS for a vessel that is under the VMS notification requirements of this paragraph (b) begin with the first hourly location signal received showing that the vessel crossed the VMS Demarcation Line leaving port. DAS end with the first hourly location signal received showing that the vessel crossed the VMS Demarcation Line upon its return to port.

(v) If the VMS is not available or not functional, and if authorized by the Regional Administrator, a vessel owner must provide the notifications required by paragraphs (b)(1)(i), (ii), and (iii) of this section by using the call-in notification system described under paragraph (c) of this section, instead of using the VMS specified in paragraph (b) of this section.

(2)(i) A vessel issued a limited access multispecies, monkfish, occasional scallop, or combination permit must use the call-in notification system specified in paragraph (c) of this section, unless the owner of such vessel has elected under paragraph (b)(2)(iii) of this section to provide the notifications required by paragraph (b) of this section.

(ii) Upon recommendation by the Council, the Regional Administrator may require, by notification through a letter to affected permit holders, notification in the **Federal Register**, or other appropriate means, that a multispecies vessel issued an Individual DAS or Combination Vessel permit install on board an operational VMS unit that meets the minimum performance criteria specified in § 648.9(b) or as modified in § 648.9(a). An owner of such a vessel must provide documentation to the Regional Administrator that the vessel has installed on board an operational VMS unit that meets those criteria. If a vessel has already been issued a permit without the owner providing such documentation, the Regional Administrator shall allow at least 30 days for the vessel to install an operational VMS unit that meets the criteria and for the owner to provide documentation of such installation to the Regional Administrator. A vessel that is required to use a VMS shall be subject to the requirements and presumptions described under paragraphs (b)(1)(i) through (b)(1)(v) of this section.

(iii) A vessel issued a limited access multispecies, monkfish, occasional scallop, or combination permit may be authorized by the Regional Administrator to provide the notifications required by paragraph (b) of this section using the VMS specified in paragraph (b) of this section. The owner of such vessel becomes authorized by providing documentation to the Regional Administrator at the time of application for an individual or combination vessel limited access multispecies permit that the vessel has installed on board an operational VMS unit that meets the minimum performance criteria specified in § 648.9(b) or as modified in § 648.9(a). Vessels that are authorized to use the VMS in lieu of the call-in requirement for DAS notification shall be subject to the requirements and presumptions described under paragraphs (b)(1)(i) through (b)(1)(v) of this section. Those who elect to use the VMS do not need to call in DAS as specified in paragraph (c) of this section. Vessels that do call in are exempt from the prohibition specified in § 648.14(c)(2).

* * * * *

(d) *Temporary authorization for use of the call-in system*. The Regional Administrator may authorize or require, on a temporary basis, the use of the call-in system of notification specified in paragraph (c) of this section, instead of use of the VMS. If use of the call-in system is authorized or required, the Regional Administrator shall notify affected permit holders through a letter, notification in the **Federal Register**, or other appropriate means. A multispecies vessel issued an Individual DAS or Combination Vessel (regarding the multispecies fishery) permit are authorized to use the call-in system of notification specified in paragraph (c) of this section, unless otherwise notified as specified in paragraph (b)(2) of this section.

* * * * *

5. In § 648.14, paragraphs (a)(117), (a)(118) and (c)(31) are added, and paragraphs (b), (c)(1), (c)(2) introductory text, (d)(1), (e) and (g)(2) are revised to read as follows:

§ 648.14 Prohibitions.

(a) * * *

(117) Fish for, land, or possess NE multispecies harvested with brush-sweep trawl gear unless the vessel has not been issued a multispecies permit and fishes for NE multispecies exclusively in state waters.

(118) Possess brush-sweep trawl gear while in possession of NE multispecies, unless the vessel has not been issued a multispecies permit and fishes for NE multispecies exclusively in state waters.

(b) In addition to the general prohibitions specified in § 600.725 of this chapter and in paragraph (a) of this section, it is unlawful for any person owning or operating a vessel holding a multispecies permit, issued an operator's permit, or issued a letter under § 648.4(a)(1)(i)(H)(*3*), to land, or possess on board a vessel, more than the possession or landing limits specified in § 648.86(a),(b) and (c), or to violate any of the other provisions of § 648.86, unless otherwise specified in § 648.17.

(c) * * *

(1) Fish for, possess at any time during a trip, or land per trip more than the possession limit of NE multispecies specified in § 648.86(d) after using up the vessel's annual DAS allocation or when not participating in the DAS program pursuant to § 648.82, unless otherwise exempted under § 648.82(b)(3) or § 648.89.

(2) For purposes of DAS notification, if required or electing to have a VMS unit under § 648.10:

* * * * *

(31) Possess or land per trip more than the possession or landing limit specified under § 648.86(c) if the vessel has been issued a multispecies permit.

(d) * * *

(1) Possess, at any time during a trip, or land per trip, more than the possession limit of NE multispecies specified in § 648.88(a), unless the vessel is a charter or party vessel fishing under the charter/party restrictions specified in § 648.89.

* * * * *

(e) In addition to the general prohibitions specified in § 600.725 of this chapter and in paragraphs (a) through (d) of this section, it is unlawful for any person owning or operating a vessel issued a scallop multispecies possession limit permit to possess or land more than the possession limit of NE multispecies specified in § 648.88(c), or to possess or land regulated species when not fishing under a scallop DAS, unless otherwise specified in § 648.17.

* * * * *

(g) * * *

(2) Possess cod, haddock, and Atlantic halibut in excess of the possession limits specified in § 648.89(c).

* * * * *

6. In § 648.80, paragraph (g)(4) is added to read as follows:

§ 648.80 Multispecies regulated mesh areas and restrictions on gear and methods of fishing.

* * * * *

(g) * * *

(4) *Brush-sweep trawl prohibition*. No vessel may fish for, possess, or land NE multispecies while fishing with, or while in possession of, brush-sweep trawl gear.

* * * * *

7. In § 648.83, paragraph (a)(1) is revised to read as follows:

§ 648.83 Multispecies minimum fish sizes.

(a) * * * (1) Minimum fish sizes for recreational vessels and charter/party vessels that are not fishing under a NE multispecies DAS are specified in § 648.89. Except as provided in § 648.17, all other vessels are subject to the following minimum fish sizes, determined by total length (T.L.):

Minimum Fish Sizes (T.L.)

Species	Size (Inches)
Cod	19 (48.3 cm)
Haddock	19 (48.3 cm)
Pollock	19 (48.3 cm)
Witch flounder (gray sole)	14 (35.6 cm)
Yellowtail flounder	13 (33.0 cm)
American plaice (dab)	14 (35.6 cm)
Atlantic halibut	36 (91.4 cm)
Winter flounder (blackback)	12 (30.5 cm)
Redfish	9 (22.9 cm)

* * * * *

8. In § 648.86, paragraph (c) is revised and paragraph (e) is added to read as follows:

§ 648.86 Multispecies possession restrictions.

* * * * *

(c) *Atlantic halibut*. A vessel issued a NE multispecies permit under § 648.4(a)(1) may land or possess on board no more than one Atlantic halibut per trip, provided the vessel complies with other applicable provisions of this part.

* * * * *

(e) *Other possession restrictions*. Vessels are subject to any other applicable possession limit restrictions of this part.

9. In § 648.88, paragraphs (a)(1), (b), (c), and (d) are revised to read as follows:

§ 648.88 Multispecies open access permit restrictions.

(a) * * *

(1) The vessel may possess and land up to 300 lb (136.1 kg) of cod, haddock, and yellowtail flounder, combined, one Atlantic halibut, and unlimited amounts of the other NE multispecies, per trip, provided that it does not use or possess on board gear other than rod and reel or handlines while in possession of, fishing for, or landing NE multispecies, and provided it has at least one standard tote on board.

* * * * *

(b) *Charter/party permit*. A vessel that has been issued a valid open access multispecies charter/party permit is subject to the additional restrictions on gear, recreational minimum fish sizes, possession limits, and prohibitions on sale specified in § 648.89, and any other applicable provisions of this part.

(c) *Scallop multispecies possession limit permit*. A vessel that has been issued a valid open access scallop multispecies possession limit permit may possess and land up to 300 lb (136.1 kg) of regulated species when fishing under a scallop DAS allocated under § 648.53, provided the vessel does not fish for, possess, or land haddock from January 1 through June 30 as specified under § 648.86(a)(2)(i), and provided the vessel has at least one standard tote on board.

(d) *Non-regulated multispecies permit*. A vessel issued a valid open access nonregulated multispecies permit may possess and land one Atlantic halibut and unlimited amounts of the other nonregulated multispecies. The vessel is subject to restrictions on gear, area, and time of fishing specified in § 648.80 and any other applicable provisions of this part.

10. In § 648.89, paragraphs (b)(1) and (c) are revised to read as follows:

§ 648.89 Recreational and charter/party restrictions.

* * * * *

(b) * * *

(1) *Minimum fish sizes*. Persons aboard charter or party vessels permitted under this part and not fishing under the DAS program, and recreational fishing vessels in the EEZ, may not retain fish smaller than the minimum fish sizes, measured in total length (T.L.) as follows:

Species	Size (Inches)
Cod	21 (53.3 cm)
Haddock	21 (53.3 cm)
Pollock	19 (48.3 cm)
Witch flounder (gray sole)	14 (35.6 cm)
Yellowtail flounder	13 (33.0 cm)
Atlantic halibut	36 (91.4 cm)
American plaice (dab)	14 (35.6 cm)
Winter flounder (blackback)	12 (30.5 cm)
Redfish	9 (22.9 cm)

* * * * *

(c) *Possession restrictions*—(1) *Cod and haddock*. Each person on a recreational vessel may possess no more than 10 cod and/or haddock, combined, in, or harvested from, the EEZ.

(i) For purposes of counting fish, fillets will be converted to whole fish at the place of landing by dividing fillet number by two. If fish are filleted into a single (butterfly) fillet, such fillet shall be deemed to be from one whole fish.

(ii) Cod and haddock harvested by recreational vessels with more than one person aboard may be pooled in one or more containers. Compliance with the possession limit will be determined by dividing the number of fish on board by the number of persons on board. If there is a violation of the possession limit on board a vessel carrying more than one person, the violation shall be deemed to have been committed by the owner and operator.

(iii) Cod and haddock must be stored so as to be readily available for inspection.

(2) *Atlantic halibut*. Charter and party vessels permitted under this part, and recreational fishing vessels fishing in the EEZ, may not possess, on board, more than one Atlantic halibut.

* * * * *

11. In § 648.90, paragraphs (b) introductory text and (b)(1) are revised to read as follows:

§ 648.90 Multispecies framework specifications.

* * * * *

(b) *Within season management action*. The Council may, at any time, initiate action to add or adjust management measures if it finds that action is necessary to meet or be consistent with the goals and objectives of the Northeast Multispecies FMP, to address gear conflicts, or to facilitate the development of aquaculture projects in the EEZ. This procedure may also be used to modify FMP overfishing definitions and fishing mortality targets which form the basis for selecting specific management measures.

(1) *Adjustment process*. The Council shall develop and analyze appropriate management actions over the span of at least two Council meetings. The Council shall provide the public with advance notice of the availability of both the proposals and the analyses and an opportunity to comment on them prior to, and at, the second Council meeting. The Council's recommendation on adjustments or additions to management measures, other than to address gear conflicts, must come from one or more of the following categories: DAS changes, effort monitoring, data

reporting, possession limits, gear restrictions, closed areas, permitting restrictions, crew limits, minimum fish sizes, onboard observers, minimum hook size and hook style, the use of crucifiers in the hook-gear fishery, fleet sector shares, recreational fishing measures, area closures and other appropriate measures to mitigate marine mammal entanglements and interactions, and any other management measures currently included in the FMP. The Council's recommendation on adjustments or additions to management measures for the purposes of facilitating aquaculture projects must come from one or more of the following categories: Minimum fish sizes, gear restrictions, minimum mesh sizes, possession limits, tagging requirements, monitoring requirements, reporting requirements, permit restrictions, area closures, establishment of special management areas or zones, and any other management measures currently included in the FMP.

* * * * *

[FR Doc. 99–26839 Filed 10–14–99; 8:45 am]

BILLING CODE 3510–22–F

DEPARTMENT OF HOUSING AND URBAN DEVELOPMENT

24 CFR Part 200

Introduction to FHA Programs

CFR Correction

In Title 24 of the Code of Federal Regulations, parts 200 to 499, revised as of Apr. 1, 1999, on page 72, § 200.1301 should precede § 200.1302. Section 200.1301 was published in the **Federal Register** at 60 FR 47262, Sept. 11, 1995, but never correctly incorporated into the CFR. Section 200.1301 reads as follows:

§ 200.1301 Expiring Programs—Savings Clause.

No new loan assistance, additional participation, or new loans are being insured under the programs listed below. Any existing loan assistance, ongoing participation, or insured loans under these programs will continue to be governed by the regulations in effect as they existed immediately before October 11, 1995:

Part 205 Mortgage Insurance for Land Development [Title X]
Part 209 Individual Homes; War Housing Mortgage Insurance [Sec. 603]
Part 224 Armed Services Housing —Military Personnel [Sec. 803]
Part 225 Military Housing Insurance [Sec. 803]
Part 226 Armed Services Housing —Civilian Employees [Sec. 809]
Part 227 Armed Services Housing—Impacted Areas [Sec. 810]
Part 228 Individual Residences; National Defense Housing Mortgage Insurance [Sec. 903]
Part 240 Mortgage Insurance on Loans for Fee Title Purchase
Part 277 Loans for Housing for the Elderly or Handicapped
Part 278 Mandatory Meals Program in Multifamily Rental or Cooperative Projects for the Elderly or Handicapped

[FR Doc. 99–55536 Filed 10–14–99; 8:45 am]

BILLING CODE 1505–01–D

PENSION BENEFIT GUARANTY CORPORATION

29 CFR Part 4044

Allocation of Assets in Single-Employer Plans; Interest Assumptions for Valuing Benefits

AGENCY: Pension Benefit Guaranty Corporation.

ACTION: Final rule.

SUMMARY: The Pension Benefit Guaranty Corporation's regulation on Allocation of Assets in Single-Employer Plans prescribes interest assumptions for valuing benefits under terminating single-employer plans. This final rule amends the regulation to adopt interest assumptions for plans with valuation dates in November 1999. Interest assumptions are also published on the PBGC's web site (http://www.pbgc.gov).

EFFECTIVE DATE: November 1, 1999.

FOR FURTHER INFORMATION CONTACT: Harold J. Ashner, Assistant General Counsel, Office of the General Counsel, Pension Benefit Guaranty Corporation, 1200 K Street, NW., Washington, DC 20005, 202–326–4024. (For TTY/TDD users, call the Federal relay service toll-free at 1–800–877–8339 and ask to be connected to 202–326–4024.)

SUPPLEMENTARY INFORMATION: The PBGC's regulation on Allocation of Assets in Single-Employer Plans (29 CFR part 4044) prescribes actuarial assumptions for valuing plan benefits of terminating single-employer plans covered by title IV of the Employee Retirement Income Security Act of 1974.

Among the actuarial assumptions prescribed in part 4044 are interest assumptions. These interest assumptions are intended to reflect current conditions in the financial and annuity markets.

Two sets of interest assumptions are prescribed, one set for the valuation of benefits to be paid as annuities and one set for the valuation of benefits to be paid as lump sums. This amendment adds to appendix B to part 4044 the annuity and lump sum interest assumptions for valuing benefits in plans with valuation dates during November 1999.

For annuity benefits, the interest assumptions will be 6.30 percent for the first 20 years following the valuation date and 5.25 percent thereafter. The annuity interest assumptions are unchanged from those in effect for October 1999. For benefits to be paid as lump sums, the interest assumptions to be used by the PBGC will be 5.00 percent for the period during which a benefit is in pay status, 4.25 percent during the seven-year period directly preceding the benefit's placement in pay status, and 4.00 percent during any other years preceding the benefit's placement in pay status. The lump sum interest assumptions are unchanged from those in effect for October 1999.

The PBGC has determined that notice and public comment on this amendment are impracticable and contrary to the public interest. This finding is based on the need to determine and issue new interest assumptions promptly so that the assumptions can reflect, as accurately as possible, current market conditions.

Because of the need to provide immediate guidance for the valuation of benefits in plans with valuation dates during November 1999, the PBGC finds that good cause exists for making the assumptions set forth in this amendment effective less than 30 days after publication.

The PBGC has determined that this action is not a ''significant regulatory action'' under the criteria set forth in Executive Order 12866.

Because no general notice of proposed rulemaking is required for this amendment, the Regulatory Flexibility Act of 1980 does not apply. See 5 U.S.C. 601(2).

List of Subjects in 29 CFR Part 4044

Pension insurance, Pensions.

In consideration of the foregoing, 29 CFR part 4044 is amended as follows:

PART 4044—ALLOCATION OF ASSETS IN SINGLE-EMPLOYER PLANS

1. The authority citation for part 4044 continues to read as follows:

Authority: 29 U.S.C. 1301(a), 1302(b)(3), 1341, 1344, 1362.

2. In appendix B, a new entry is added to Table I, and Rate Set 73 is added to Table II, as set forth below. The introductory text of each table is republished for the convenience of the reader and remains unchanged.

Appendix B to Part 4044—Interest Rates Used To Value Annuities and Lump Sums

TABLE I.—ANNUITY VALUATIONS

[This table sets forth, for each indicated calendar month, the interest rates (denoted by i_1, i_2, . . . , and referred to generally as i_t) assumed to be in effect between specified anniversaries of a valuation date that occurs within that calendar month; those anniversaries are specified in the columns adjacent to the rates. The last listed rate is assumed to be in effect after the last listed anniversary date.]

For valuation dates occurring in the month—	The values of i_t are:					
	i_t	for t =	i_t	for t =	i_t	for t =
* * *	*		*		*	*
November 1999	.0630	1–20	.0525	>20	N/A	N/A

TABLE II.—LUMP SUM VALUATIONS

[In using this table: (1) For benefits for which the participant or beneficiary is entitled to be in pay status on the valuation date, the immediate annuity rate shall apply; (2) For benefits for which the deferral period is y years (where y is an integer and $0 < y \leq n_1$), interest rate i_1 shall apply from the valuation date for a period of y years, and thereafter the immediate annuity rate shall apply; (3) For benefits for which the deferral period is y years (where y is an integer and $n_1 < y \leq n_1 + n_2$), interest rate i_2 shall apply from the valuation date for a period of $y - n_1$ years, interest rate i_1 shall apply for the following n_1 years, and thereafter the immediate annuity rate shall apply; (4) For benefits for which the deferral period is y years (where y is an integer and $y > n_1 + n_2$), interest rate i_3 shall apply from the valuation date for a period of $y - n_1 - n_2$ years, interest rate i_2 shall apply for the following n_2 years, interest rate i_1 shall apply for the following n_1 years, and thereafter the immediate annuity rate shall apply.]

Rate set	For plans with a valuation date		Immediate annuity rate (percent)	Deferred annuities (percent)				
	On or after	Before		i_1	i_2	i_3	n_1	n_2
*	*		*	*	*	*		*
73	11–1–99	12–1–99	5.00	4.25	4.00	4.00	7	8

Issued in Washington, DC, on this 8th day of October 1999.

David M. Strauss,

Executive Director, Pension Benefit Guaranty Corporation.

[FR Doc. 99–26958 Filed 10–14–99; 8:45 am]

BILLING CODE 7708–01–P

DEPARTMENT OF TRANSPORTATION

Coast Guard

33 CFR Part 100

[CGD 05–99–016]

RIN 2115–AE46

Special Local Regulations for Marine Events; Night in Venice, Great Egg Harbor, City of Ocean City, NJ

AGENCY: Coast Guard, DOT.

ACTION: Final rule.

SUMMARY: The Coast Guard is amending permanent special local regulations established for the Night in Venice, a marine event held annually in Great Egg Harbor, by redefining the regulated area. This action is necessary to provide a current description of the event area. This action is intended to enhance the safety of life and property during the event.

DATES: This final rule is effective November 15, 1999.

ADDRESSES: Documents as indicated in this preamble are available for inspection or copying at Commander (Aoax), Fifth Coast Guard District, Room 119, 431 Crawford Street, Portsmouth, Virginia 23704–5004 between 9:30 a.m. and 2 p.m., Monday through Friday, except Federal holidays. The telephone number is (757) 398–6204.

FOR FURTHER INFORMATION CONTACT: S.L. Phillips, Project Manager, Operations Division, Auxiliary Section, at (757) 398–6204.

SUPPLEMENTARY INFORMATION:

Regulatory History

On May 10, 1999, the Coast Guard published a notice of proposed rulemaking (NPRM) entitled ''Special Local Regulations for Marine Events; Night in Venice, Great Egg Harbor, City of Ocean City, New Jersey'' in the **Federal Register** (64 FR 24979). The Coast Guard received no letters commenting on the proposed rulemaking. No public hearing was requested, and none was held.

Background and Purpose

The current regulations at 33 CFR 100.504 establish special local regulations for the Night in Venice, a marine event held annually in Great Egg Harbor Bay. The purpose of these regulations is to control vessel traffic during the event to enhance the safety of participants, spectators, and transiting vessels. The regulated area was initially described in the current regulations by referencing prominent aids to navigation in the event area. Since the initial publication of the regulations at 33 CFR 100.504, the referenced buoys and markers have been renamed and/or repositioned.

Regulatory Evaluation

This final rule is not a significant regulatory action under section 3(f) of Executive Order 12866 and does not require an assessment of potential costs and benefits under section 6(a)(3) of that order. The Office of Management and Budget has not reviewed it under that order. It is not ''significant'' under the regulatory policies and procedures of the Department of Transportation (DOT) (44 FR 11040; February 26, 1979).

The Coast Guard expects the economic impact of this final rule to be so minimal that a full Regulatory Evaluation under paragraph 10e of the regulatory policies and procedures of

DOT is unnecessary. This final rule merely redefines the regulated area of an existing regulation and does not impose any new restrictions on vessel traffic.

Small Entities

Under the Regulatory Flexibility Act (5 U.S.C. 601 *et seq.*), the Coast Guard considered whether this final rule, will have a significant economic impact on a substantial number of small entities. ''Small Entities'' include small businesses, not-for-profit organizations that are independently owned and operated and are not dominant in their fields, and governmental jurisdictions with populations of less than 50,000.

Because this final rule merely redefines the regulated area of an existing regulation and does not impose any new restrictions on vessel traffic, the Coast Guard expects the impact of this final rule to be minimal.

Therefore, the Coast Guard certifies under 5 U.S.C. 605(b), that this final rule will not have a significant economic impact on a substantial number of small entities.

Assistance for Small Entities

In accordance with section 213(a) of the Small Business Regulatory Enforcement Fairness Act of 1996 (Pub. L. 104–121), the Coast Guard offered to assist small entities in understanding the rule so that they can better evaluate its effects on them and participate in the rulemaking process. No requests for assistance were received.

Collection of Information

This final rule does not provide for a collection of information under the Paperwork Reduction Act of 1995 (44 U.S.C. 3501–3520).

Federalism

The Coast Guard has analyzed this final rule under the principles and criteria contained in Executive Order 12612 and has determined that this final rule does not have sufficient federalism implications to warrant the preparation of a Federalism Assessment.

Environment

The Coast Guard considered the environmental impact of this final rule and concluded that, under figure 2–1, paragraph (34)(h) of Commandant Instruction M16475.1C, this final rule is categorically excluded from further environmental documentation. This special local regulation will have no impact on the environment.

List of Subjects in 33 CFR Part 100

Marine safety, Navigation (water), Reporting and recordkeeping requirements, Waterways.

For the reasons set out in the preamble, the Coast Guard amends 33 CFR Part 100 as follows:

PART 100—[AMENDED]

1. The authority citation for Part 100 continues to read as follows:

Authority: 33 U.S.C 1233 through 1236; 49 CFR 1.46 and 33 CFR 100.35.

2. Section 100.504 is amended by revising paragraph (a) to read as follows:

§ 100.504 Night in Venice, Great Egg Harbor Bay, City of Ocean City, NJ.

(a) *Regulated area.* The waters of Great Egg Harbor Bay and Beach Thorofare from Intracoastal Waterway Light 275 (LLNR 36045) northward along the entire width of the Intracoastal Waterway to the 9th Street Bridge, thence northeastward along the Ocean City Waterfront to the Long Port-Ocean City Bridge, thence northward along the Long Port-Ocean City Bridge to the northern shore, thence westward to Ships Channel Buoy 6 (LLNR 1350), thence southward to Intracoastal Waterway Light 252 (LLNR 35980), thence southwestward to the 9th Street Bridge.

* * * * *

Dated: September, 9 1999.

Thomas E. Bernard,

Captain, U.S. Coast Guard, Acting Commander, Fifth Coast Guard District.

[FR Doc. 99–26943 Filed 10–14–99; 8:45 am]

BILLING CODE 4910–15–P

DEPARTMENT OF TRANSPORTATION

Coast Guard

33 CFR Part 100

[CGD08–99–060]

RIN 2115–AE46

Special Local Regulations: Stone Mountain Productions; Tennessee River Mile 463.5–464.5; Chattanooga, TN

AGENCY: Coast Guard, DOT.

ACTION: Temporary Final Rule

SUMMARY: Special local regulations are being adopted for the Stone Mountain Productions. This event will be held from 9:00 p.m. until 10:00 p.m. on October 16, 1999 at the riverfront in Chattanooga, Tennessee. These regulations are needed to provide for the safety of life on navigable waters during the event.

DATES: These regulations are effective from 9:00 p.m. until 10:00 p.m. on October 16, 1999.

ADDRESSES: Unless otherwise indicated, all documents referred to in this document are available for review at Marine Safety Detachment Nashville, 220 Great Circle Road, Suite 148, Nashville, TN 37228–1700.

FOR FURTHER INFORMATION CONTACT: MK3 Gregory Gunnels, Marine Safety Detachment Nashville, TN. Tel: (615) 736–5421.

SUPPLEMENTARY INFORMATION:

Regulatory History

In accordance with 5 U.S.C. 553, a notice of proposed rule making for these regulations has not been published, and good cause exists for making them effective in less than 30 days from the date of publication. Following normal rule making procedures would have been impracticable. The details of the event were not finalized with sufficient time remaining to publish proposed rules in advance of the event or to provide for a delayed effective date.

Background and Purpose

The marine event requiring this regulation is a fireworks show called ''Stone Mountain Productions.'' Stone Mountain Productions, Inc. sponsors the event. Spectators will be able to view the event from areas designated by the sponsor. Non-participating vessels will be able to transit the area after the fireworks show is secured.

Regulatory Evaluation

This rule is not a significant regulatory action under section 3(f) of Executive Order 12866 and does not require an assessment of potential costs and benefits under section 6(a)(3) of that order. It has not been reviewed by the Office of Management and Budget under that order. It is not significant under the regulatory policies and procedures of the Department of Transportation (DOT) (44 FR 11040; February 26, 1979). The Coast Guard expects the economic impact of this rule to be so minimal that a full Regulatory Evaluation under paragraph 10e of the regulatory policies and procedures of DOT is unnecessary because of the event's short duration.

Small Entities

The Coast Guard finds that the impact on small entities, if any, is not substantial. Therefore, the Coast Guard certifies under section 605(b) of the Regulatory Flexibility Act (5 U.S.C. 601 et seq) that this temporary rule will not have a significant economic impact on a substantial number of small entities because of the event's short duration.

Collection of Information

This rule contains no information collection requirements under the Paperwork Reduction Act (44 U.S.C. 3501 *et seq*).

Federalism Assessment

The Coast Guard has analyzed this action in accordance with the principles and criteria of Executive Order 12612 and has determined that this rule does not raise sufficient federalism implications to warrant the preparation of a Federalism Assessment.

Environmental Assessment

The Coast Guard considered the environmental impact of this rule and concluded that under section 2–1, paragraph (34) (h) of Commandant Instruction M16475.1C this rule is excluded from further environmental documentation.

List of Subjects in 33 CFR Part 100

Marine safety, Navigation (water), Reporting and recordkeeping requirements.

Temporary Regulations

In consideration of the foregoing, Part 100 of Title 33, Code of Federal Regulations, is amended as follows:

PART 100—[AMENDED]

1. The authority citation for part 100 continues to read as follows:

Authority: 33 U.S.C. 1233; 49 CFR 1.46 and 33 CFR 100.35.

2. A temporary § 100.35–T08–060 is added to read as follows:

§ 100.35–T08–060 Tennessee River at Chattanooga, Tennessee

(a) *Regulated area.* All the waters of the Tennessee River Mile 463.5. to 464.5.

(b) *Special Local Regulation.* (1) All persons and vessels not registered with the sponsors as participants or official patrol vessels are considered spectators. The ''official patrol'' consists of any Coast Guard, public, state or local law enforcement and/or sponsor provided vessels assigned to patrol the event.

(2) No spectators shall anchor, block, loiter in, or impede the through transit of participants or official patrol vessels in the regulated area during effective dates and times, unless cleared for such entry by or through an official patrol vessel.

(3) When hailed or signaled by an official patrol vessel, a spectator shall come to an immediate stop. Vessels shall comply with all directions given: failure to do so may result in a citation.

(4) The Patrol Commander is empowered to forbid and control the movement of all vessels in the regulated area. The Patrol Commander may terminate the event at any time it is deemed necessary for the protection of life and property and can be reached on VHF-FM Channel 16 by using the call sign ''PATCOM''.

(c) *Effective date.* These regulations will be effective from 9:00 p.m. to 10:00 p.m. on October 16, 1999.

Dated: October 7, 1999.

Paul J. Pluta,

Rear Admiral, U.S. Coast Guard Commander, Eighth Coast Guard District.

[FR Doc. 99–27090 Filed 10–13–99; 1:29 pm]

BILLING CODE 4910–15–P

DEPARTMENT OF TRANSPORTATION

Coast Guard

33 CFR Part 117

[CGD01–99–174]

Drawbridge Operation Regulations; Acushnet River, MA

AGENCY: Coast Guard, DOT.

ACTION: Notice of temporary deviation from regulations.

SUMMARY: The Commander, First Coast Guard Division, has issued a temporary deviation from the drawbridge operation regulations governing the operation of the New Bedford Fairhaven (RT–6) swing bridge, mile 0.0, across the Acushnet River between New Bedford and Fairhaven, Massachusetts. This deviation from the regulations allows the bridge owner to require a two hour advance notice for openings, 8 p.m. to 4 a.m., October 19, 1999, through October 20, 1999. This action is necessary to facilitate electrical modifications at the bridge.

DATES: This deviation is effective October 19, 1999, through October 20, 1999.

FOR FURTHER INFORMATION CONTACT: John McDonald, Project Officer, First Coast Guard District, at (617) 223–8364.

SUPPLEMENTARY INFORMATION: The New Bedford Fairhaven (RT–6) swing bridge, mile 0.0, across the Acushnet River between New Bedford and Fairhaven, Massachusetts, has a vertical clearance of 8 feet at mean high water, and 12 feet at mean low water in the closed position. The bridge owner, Massachusetts Highway Department (MHD), requested a temporary deviation from the operating regulations to facilitate electrical modifications at the bridge. The existing operating regulations listed at 33 CFR 117.585 require the bridge to open on signal during the time period MHD has requested that a two-hour advance notice be given for bridge openings.

This deviation to the operating regulations allows the owner of the New Bedford Fairhaven (RT–6) swing bridge to require a two-hour advance notice for bridge openings from 8 p.m. to 4 a.m., October 19, 1999, through October 20, 1999. Requests for bridge openings can be made by calling (508) 992–2384 or on marine radio channel 13 VHF/FM. Vessels that can pass under the bridge without an opening may do so at all times.

In accordance with 33 CFR 117.35(c), this work will be performed with all due speed in order to return the bridge to normal operation as soon as possible. This deviation from the operating regulations is authorized under 33 CFR 117.35.

Dated: October 5, 1999.

R.M. Larrabee,

Rear Admiral, U.S. Coast Guard, Commander, First Coast Guard District.

[FR Doc. 99–26944 Filed 10–14–99; 8:45 am]

BILLING CODE 4910–15–M

ENVIRONMENTAL PROTECTION AGENCY

40 CFR Part 52

[NC–083–1–9938a; FRL–6453–8]

Approval and Promulgation of Implementation Plans: Approval of Revisions to the North Carolina State Implementation Plan

AGENCY: Environmental Protection Agency (EPA).

ACTION: Direct final rule.

SUMMARY: On March 19, 1997, the State of North Carolina, through the North Carolina Department of Environment and Natural Resources (NCDENR) submitted revisions to the North Carolina State Implementation Plan (SIP). Rules 15A NCAC 2D .0530 and 2Q .0104 and .0107 are revised to amend cross-references and incorporate the latest edition of the Code of Federal Regulations for Prevention of Significant Deterioration (PSD). Rules 15A NCAC 2D .0518, .0902, .0909, and .0954 are revised to change the mechanism and procedures for activating the Reasonably Available Control Technology (RACT) rules for volatile organic compounds (VOCs) and nitrogen oxides (NOx) in the Raleigh/Durham and Greensboro/Winston-Salem/High Point ozone maintenance areas. Rules 15A NCAC 2D .0907, .0910, and .0911 are being

repealed to remove unnecessary or elapsed compliance schedules.

DATES: This direct final rule is effective December 14, 1999, without further notice, unless EPA receives adverse comment by November 15, 1999. If adverse comment is received, EPA will publish a timely withdrawal of the direct final rule in the **Federal Register** and inform the public that the rule will not take effect.

ADDRESSES: All comments should be addressed to: Gregory Crawford at the U.S. Environmental Protection Agency, Region 4 Air Planning Branch, 61 Forsyth Street, SW, Atlanta, Georgia 30303.

Copies of the state submittal(s) are available at the following addresses for inspection during normal business hours:

Air and Radiation Docket and Information Center (Air Docket 6102), U.S. Environmental Protection Agency, 401 M Street, SW, Washington, DC 20460.

Environmental Protection Agency, Region 4, Air Planning Branch, 61 Forsyth Street, SW, Atlanta, Georgia 30303–8960.

North Carolina Department of Environment and Natural Resources, Division of Air Quality, 1641 Mail Service Center, Raleigh, North Carolina 27699.

FOR FURTHER INFORMATION CONTACT: Gregory Crawford, Regulatory Planning Section, Air Planning Branch, Air Pesticides and Toxics Management Division at 404/562–9046.

SUPPLEMENTARY INFORMATION:

I. Background

On March 19, 1997, the State of North Carolina Department of Environment and Natural Resources submitted revisions to amend or repeal multiple sections in the North Carolina Administrative Code. These amendments addresses Subchapters 2D-Air Pollution Control Requirements and 2Q-Air Quality Permits Requirements. Detailed descriptions of the amendments are listed under ''Analysis of the State's Submittal.''

II. Analysis of State's Submittal

15 A NCAC 2D .0530, Prevention of Significant Deterioration

This regulation was amended to incorporate the latest edition of the Code of Federal Regulations concerning the PSD program. The general statues for this regulation have been amended to remove the automatic default issuance language when the Division of Air Quality (DAQ) fails to act on the permit application in a timely manner (90 days).

15A NCAC 2Q. 0104, Where To Obtain and File Permit Application

This regulation was amended to remove a cross-reference to a repealed rule.

15A NCAC 2Q. 0107, Confidential Information

This regulation was amended to correct a cross-reference to the general statute that establishes the requirements for information to be treated as confidential by the DAQ.

15A NCAC 2D. 0518, Miscellaneous Volatile Organic Compound Emissions

This regulation was amended to correct a cross-reference.

15A NCAC 2D .0902 (c–i), Applicability

This regulation was amended to correct a cross reference and change the mechanism and procedures for activating the RACT for VOCs and NOx in the Raleigh/Durham and Greensboro/Winston-Salem/High Point areas. The amendment also deletes the unnecessary or elapsed compliance schedules for the areas.

15A NCAC 2D .0909, Compliance Schedules for Sources in New Nonattainment Areas

This regulation was amended to correct a cross-reference and to amend the applicability language.

15A NCAC 2D. 0954, Stage II Vapor Recovery

This regulation was amended to correct cross-references in the section.

15A NCAC 2D. 0907, Compliance Schedules for Sources in Nonattainment Areas, 0910, Alternative Compliance Schedules, and .0911, Exception From Compliance Schedules

These regulations are being repealed. The schedules in these rules are obsolete.

III. Final Action

EPA is approving the aforementioned changes to the SIP because they are consistent with the Clean Air Act and EPA requirements.

The EPA is publishing this rule without prior proposal because the Agency views this as a noncontroversial submittal and anticipates no adverse comments. However, in the proposed rules section of this **Federal Register** publication, EPA is publishing a separate document that will serve as the proposal to approve the SIP revision should adverse comments be filed. This rule will be effective December 14, 1999, without further notice unless the Agency receives adverse comments by November 15, 1999.

If the EPA receives such comments, then EPA will publish a document withdrawing the final rule and informing the public that the rule will not take effect. All public comments received will then be addressed in a subsequent final rule based on the proposed rule. The EPA will not institute a second comment period. Parties interested in commenting should do so at this time. If no such comments are received, the public is advised that this rule will be effective on December 14, 1999, and no further action will be taken on the proposed rule.

IV. Administrative Requirements

A. Executive Order 12866

The Office of Management and Budget (OMB) has exempted this regulatory action from Executive Order (E.O.) 12866, entitled ''Regulatory Planning and Review.''

B. Executive Orders on Federalism

Under E.O. 12875, EPA may not issue a regulation that is not required by statute and that creates a mandate upon a state, local, or tribal government, unless the Federal government provides the funds necessary to pay the direct compliance costs incurred by those governments. If the mandate is unfunded, EPA must provide to the Office of Management and Budget a description of the extent of EPA's prior consultation with representatives of affected state, local, and tribal governments, the nature of their concerns, copies of written communications from the governments, and a statement supporting the need to issue the regulation.

In addition, E.O. 12875 requires EPA to develop an effective process permitting elected officials and other representatives of state, local, and tribal governments ''to provide meaningful and timely input in the development of regulatory proposals containing significant unfunded mandates.'' Today's rule does not create a mandate on state, local or tribal governments. The rule does not impose any enforceable duties on these entities. Accordingly, the requirements of section 1(a) of E.O. 12875 do not apply to this rule.

On August 4, 1999, President Clinton issued a new executive order on federalism, Executive Order 13132, (64 FR 43255 (August 10, 1999),) which will take effect on November 2, 1999. In the interim, the current Executive Order

12612, (52 FR 41685 (October 30, 1987),) on federalism still applies. This rule will not have a substantial direct effect on States, on the relationship between the national government and the States, or on the distribution of power and responsibilities among the various levels of government, as specified in Executive Order 12612. The rule affects only one State and does not alter the relationship or the distribution of power and responsibilities established in the Clean Air Act.

C. Executive Order 13045

Protection of Children from Environmental Health Risks and Safety Risks (62 FR 19885, April 23, 1997), applies to any rule that: (1) is determined to be ''economically significant'' as defined under E.O. 12866, and (2) concerns an environmental health or safety risk that EPA has reason to believe may have a disproportionate effect on children. If the regulatory action meets both criteria, the Agency must evaluate the environmental health or safety effects of the planned rule on children, and explain why the planned regulation is preferable to other potentially effective and reasonably feasible alternatives considered by the Agency.

This rule is not subject to E.O. 13045 because it does not involve decisions intended to mitigate environmental health or safety risks.

D. Executive Order 13084

Under E.O. 13084, EPA may not issue a regulation that is not required by statute, that significantly affects or uniquely affects the communities of Indian tribal governments, and that imposes substantial direct compliance costs on those communities, unless the Federal government provides the funds necessary to pay the direct compliance costs incurred by the tribal governments. If the mandate is unfunded, EPA must provide to the Office of Management and Budget, in a separately identified section of the preamble to the rule, a description of the extent of EPA's prior consultation with representatives of affected tribal governments, a summary of the nature of their concerns, and a statement supporting the need to issue the regulation.

In addition, E.O. 13084 requires EPA to develop an effective process permitting elected and other representatives of Indian tribal governments ''to provide meaningful and timely input in the development of regulatory policies on matters that significantly or uniquely affect their communities.'' Today's rule does not significantly or uniquely affect the communities of Indian tribal governments. Accordingly, the requirements of section 3(b) of E.O. 13084 do not apply to this rule.

E. Regulatory Flexibility Act

The Regulatory Flexibility Act (RFA) generally requires an agency to conduct a regulatory flexibility analysis of any rule subject to notice and comment rulemaking requirements unless the agency certifies that the rule will not have a significant economic impact on a substantial number of small entities. Small entities include small businesses, small not-for-profit enterprises, and small governmental jurisdictions. This final rule will not have a significant impact on a substantial number of small entities because SIP approvals under section 110 and subchapter I, part D of the Clean Air Act do not create any new requirements but simply approve requirements that the State is already imposing. Therefore, because the Federal SIP approval does not create any new requirements, I certify that this action will not have a significant economic impact on a substantial number of small entities. Moreover, due to the nature of the Federal-State relationship under the Clean Air Act, preparation of flexibility analysis would constitute Federal inquiry into the economic reasonableness of state action. The Clean Air Act forbids EPA to base its actions concerning SIPs on such grounds. *Union Electric Co.,* v. *U.S. EPA*, 427 U.S. 246, 255–66 (1976); 42 U.S.C. 7410(a)(2).

F. Unfunded Mandates

Under section 202 of the Unfunded Mandates Reform Act of 1995 (''Unfunded Mandates Act''), signed into law on March 22, 1995, EPA must prepare a budgetary impact statement to accompany any proposed or final rule that includes a Federal mandate that may result in estimated annual costs to State, local, or tribal governments in the aggregate; or to private sector, of $100 million or more. Under section 205, EPA must select the most cost-effective and least burdensome alternative that achieves the objectives of the rule and is consistent with statutory requirements. Section 203 requires EPA to establish a plan for informing and advising any small governments that may be significantly or uniquely impacted by the rule.

EPA has determined that the approval action promulgated does not include a Federal mandate that may result in estimated annual costs of $100 million or more to either State, local, or tribal governments in the aggregate, or to the private sector. This Federal action approves pre-existing requirements under State or local law, and imposes no new requirements. Accordingly, no additional costs to State, local, or tribal governments, or to the private sector, result from this action.

G. Submission to Congress and the Comptroller General

The Congressional Review Act, 5 U.S.C. 801 *et seq.*, as added by the Small Business Regulatory Enforcement Fairness Act of 1996, generally provides that before a rule may take effect, the agency promulgating the rule must submit a rule report, which includes a copy of the rule, to each House of the Congress and to the Comptroller General of the United States. EPA will submit a report containing this rule and other required information to the U.S. Senate, the U.S. House of Representatives, and the Comptroller General of the United States prior to publication of the rule in the **Federal Register**. This rule is not a ''major'' rule as defined by 5 U.S.C. 804(2).

H. National Technology Transfer and Advancement Act

Section 12 of the National Technology Transfer and Advancement Act (NTTAA) of 1995 requires Federal agencies to evaluate existing technical standards when developing a new regulation. To comply with NTTAA, EPA must consider and use ''voluntary consensus standards'' (VCS) if available and applicable when developing programs and policies unless doing so would be inconsistent with applicable law or otherwise impractical.

The EPA believes that VCS are inapplicable to this action. Today's action does not require the public to perform activities conducive to the use of VCS.

I. Petitions for Judicial Review

Under section 307(b)(1) of the Clean Air Act, petitions for judicial review of this action must be filed in the United States Court of Appeals for the appropriate circuit by December 14, 1999. Filing a petition for reconsideration by the Administrator of this final rule does not affect the finality of this rule for the purposes of judicial review nor does it extend the time within which a petition for judicial review may be filed, and shall not postpone the effectiveness of such rule or action. This action may not be challenged later in proceedings to enforce its requirements. (See section 307(b)(2).)

List of Subjects in 40 CFR Part 52

Environmental protection, Air pollution control, Hydrocarbons, Intergovernmental relations, Ozone, Reporting and recordkeeping requirements.

Dated: September 23, 1999.

A. Stanley Meiburg,

Acting Regional Administrator, Region 4.

Chapter I, title 40, Code of Federal Regulations, is amended as follows:

PART 52—[AMENDED]

1. The authority citation for part 52 continues to read as follows:

Authority: 42 U.S.C. 7401 *et seq.*

Subpart II—North Carolina

2. Section 52.1770(c) is amended by revising the entries for Sections .0518, .0530, .0902, .0907, .0909, .0910, .0911, .0954, and .0107 and by adding section .0104 to read as follows:

§ 52.1770 Identification of plan.

* * * * *

(c) EPA approved regulations.

EPA APPROVED REGULATIONS FOR NORTH CAROLINA

State citation	Title/subject	Adoption date	EPA approval date	Explanation
Subchapter 2D	Air Pollution Control Requirements			
*	*	*	*	*
Section .0518	Miscellaneous Volatile Organic Compound Emissions.	11/21/96	10/15/99	
*	*	*	*	*
Section .0530	Prevention of Significant Deterioration.	11/21/96	10/15/99	
*	*	*	*	*
Section .0902	Applicability	11/21/96	10/15/99	
*	*	*	*	*
Section .0907	Compliance Schedules for Sources in Nonattainment Areas.	11/21/96	10/15/99	[Repealed]
*	*	*	*	*
Section .0909	Compliance Schedules for Sources in New Nonattainment Areas.	11/21/96	10/15/99	
Section .0910	Alternate Compliance Schedules ..	11/21/96	10/15/99	[Repealed]
Section .0911	Exceptions for Compliance Schedules.	11/21/96	10/15/99	[Repealed
*	*	*	*	*
Section .0954	Stage II Vapor Recovery	11/21/96	10/15/99	
*	*	*	*	*
Subchapter 2Q	Air Quality Permits Requirements			
Section .0104	Where to Obtain and File Permit Applications.	11/21/96	10/15/99	
Section .0107	Confidential Information	11/21/96	10/15/99	

[FR Doc. 99–26193 Filed 10–14–99; 8:45 am]

BILLING CODE 6560–50–U

ENVIRONMENTAL PROTECTION AGENCY

40 CFR Part 76

[FRL–6455–4]

Acid Rain Program—Nitrogen Oxides Emission Reduction Program, Rule Revision in Response to Court Remand

AGENCY: Environmental Protection Agency.

ACTION: Direct final rule.

SUMMARY: The Environmental Protection Agency (EPA) is taking direct final action to revise the regulations for the Acid Rain Nitrogen Oxides Emission Reduction Program under title IV of the Clean Air Act in response to a remand by the U.S. Court of Appeals for the District of Columbia Circuit. In December 1996, EPA issued regulations setting nitrogen oxides (NO_X) emission limits for specified types of existing, coal-fired boilers, including cell burner boilers, that are subject to such limits starting in 2000. In February 1998, the Court upheld the regulations except for one provision addressing what boilers qualify as cell burner boilers. The Court vacated and remanded that provision. EPA is revising the regulations, consistent with the Court's decision, to treat, as a cell burner boiler, any boiler subject to the limits starting in 2000, constructed as a cell burner boiler, and converted to the burner configuration of a wall-fired boiler. Under the regulations, a cell burner boiler must meet an annual average NO_X emission limit of 0.68 lb/mmBtu. The NO_X emission limits under title IV will reduce the serious, adverse effects of NO_X emissions on human health, visibility, ecosystems, and materials.

DATES: This rule is effective on December 14, 1999 without further notice, unless EPA receives adverse comment by November 29, 1999. If we receive such comment, we will publish a timely withdrawal in the **Federal Register** informing the public that this rule will not take effect.

ADDRESSES: *Comments:* Commenters must identify all written comments with the appropriate docket number (Docket No. A–95–28) and must submit them in duplicate to EPA Air Docket Section (6102), Waterside Mall, Room M1500, 1st Floor, 401 M Street, SW, Washington, DC 20460.

Docket. Docket No. A–95–28, containing supporting information used in developing the proposed rule, is available for public inspection and copying between 8:30 a.m. and 3:30 p.m., Monday through Friday, at EPA's Air Docket Section, Waterside Mall, Room 1500, 1st Floor, 401 M Street, SW, Washington, DC 20460. EPA may charge a reasonable fee for copying.

FOR FURTHER INFORMATION CONTACT: Dwight C. Alpern, at (202) 564–9151,

U.S. Environmental Protection Agency, 401 M Street, SW, Washington, DC 20460; or the Acid Rain Hotline at (202) 564–9089.

SUPPLEMENTARY INFORMATION: EPA is publishing this rule revision as a direct final rule because we view this as noncontroversial and anticipate no adverse comment. The rule revision is consistent with a remand by the U.S. Court of Appeals for the District of Columbia Circuit. Further, EPA projects that the rule revision will affect only one boiler, by increasing the boiler's NO_X emission limit under title IV. However, in the ''Proposed Rules'' section of today's **Federal Register**, we are publishing a separate document that will serve as the proposed rule revision if we receive any timely, adverse comments. Today's direct final rule will be effective on December 14, 1999 without further notice unless we receive adverse comment by November 29, 1999. If we receive such adverse comment, we will publish a timely withdrawal in the **Federal Register** informing the public that the rule will not take effect. We will address all public comments in a subsequent final rule based on the proposed rule. We will not institute a second comment period on this action. Any parties interested in commenting must do so at this time.

The information in this preamble is organized as follows:

I. Regulated Entities
II. Background and Revisions
III. Administrative Requirements
A. Executive Order 12866: Regulatory Planning and Review
B. Executive Order 12875: Enhancing Intergovernmental Partnerships
C. Executive Order 13084: Consultation and Coordination with Indian Tribal Governments
D. Unfunded Mandates Act
E. Paperwork Reduction Act
F. Regulatory Flexibility
G. Applicability of Executive Order 13045: Children's Health Protection
H. National Technology Transfer and Advancement Act
I. Submission to Congress and the General Accounting Office

I. Regulated Entities

Entities potentially regulated by this action are fossil-fuel fired boilers that burn coal and that serve generators producing electricity for sale. Regulated categories and entities include:

Category	Examples of regulated entities
NAICS Code: 22112, Fossil Fuel Electric Power Production.	Electric service providers, boilers that burn coal.

This table is not intended to be exhaustive, but rather provides a guide for readers regarding entities likely to be regulated by this action. This table lists the types of entities that EPA is now aware could potentially be regulated by this action. This action could also regulate other types of entities not listed in the table. To determine whether your facility is regulated by this action, you should carefully examine the applicability criteria in §§ 72.6 and 76.1 and the exemption in § 72.8 of title 40 of the Code of Federal Regulations. If you have questions regarding the applicability of this action to a particular entity, consult the person listed in the preceding **FOR FURTHER INFORMATION CONTACT** section.

II. Background and Revisions

Under title IV of the Act, utility units are subject to sulfur dioxide (SO_2) emission limits (as required in sections 404, 405, 408,and 409) and must monitor SO_2, NO_X, carbon dioxide (CO_2), and opacity (as required in section 412). Further, under section 407(a), NO_X emission limits established under section 407(b) apply to any existing ''coal-fired utility unit,'' generally when the unit is subject to SO_2 emission limits. 40 U.S.C. 7651f(a). Section 407(b)(1) requires EPA to set NO_X emission limits for tangentially fired boilers and dry bottom, wall-fired boilers. Section 407(b)(2) authorizes EPA to establish more stringent emission limits for these types of boilers effective starting in 2000. In addition, section 407(b)(2) requires EPA to set NO_X emission limits for all other types of existing coal-fired boilers, including ''units applying cell burner technologies.'' 40 CFR 7651f(b)(2). However, title IV does not define the phrase ''units applying cell burner technology.'' EPA therefore interpreted the phrase in the regulations setting the applicable limits.

Cell burner boilers have closely spaced clusters of 2 or 3 burners (*i.e.*, cells) that together result in a single flame. In addition, the boilers are, like many wall-fired boilers, relatively compactly designed with small furnaces. Two types of combustion control systems are available for cell burner boilers. First, the boiler owner or operator can retain the cell configuration of the burners by replacing each burner in each cell with a low NO_X burner (referred to as ''plug-in combustion controls''). Second, the owner or operator can replace the sections of the boiler walls containing the cells with wall sections that reconfigure and replace the burners and that contain low NO_X burners more widely spaced in a row (referred to as ''non-plug-in combustion controls''), like those in wall-fired boilers. Either type of combustion controls may or may not include additional ports for the injection of air above the low NO_X burners.

In interpreting section 407 for purposes of setting emission limits under sections 407(b)(1) and (2), EPA had to decide how to apply the boiler categories to boilers to which the owner or operator made physical changes after original construction. Some of these changes could arguably put the boilers in a different boiler category. EPA first addressed this issue in the rulemaking under section 407(b)(1) where EPA issued the April 13, 1995 rule setting the initial limits for tangentially fired boilers and dry bottom, wall-fired boilers. The rule provided that a cell burner boiler that is subject to SO_2 limits during 1995 through 1999 (*i.e.*, Phase I of the Acid Rain Program) and that converted to the conventional burner configuration of a wall-fired boiler (*i.e.*, through retrofitting with non-plug-in combustion controls) on or before January 1, 1995 is classified as a wall-fired boiler. 40 CFR 76.5(d).

EPA also addressed this issue in the rulemaking under section 407(b)(2) where EPA issued the December 19, 1996 rule that, among other things, set an emission limit for cell burner boilers. In the preamble of the proposed rule in that rulemaking, EPA stated that the replacement of the cells in a cell burner boiler by conventionally spaced burners ''essentially convert[s] the cell burner boiler to a conventional wall-fired boiler''. 61 FR 1442,1465 (1996). EPA proposed treating, as a cell burner boiler, any cell burner boiler (other than a Phase I boiler) that replaced its cells on or before the commencement of Phase II of the Acid Rain Program (*i.e.*, January 1, 2000). 61 FR 1480. One commenter submitted comments on this matter.

Noting that the Agency was also considering an alternative that would classify, as wall-fired boilers, any cell burner boilers that converted their cells on or before November 15, 1990, the commenter opposed that alternative. The commenter noted that it originally constructed two of its units as cell burner boilers and that it installed non-plug-in combustion controls at the first unit in 1989 and at the second unit in 1991. The commenter argued that the two units are, as a technical matter, still cell burner boilers after conversion of their cells to conventionally spaced low NO_X burners. According to the commenter, the two units should therefore be subject to the NO_X emission

limit for cell burner boilers, not the more stringent NO_X emission limit for wall fired boilers. The commenter urged that, for purposes of determining how to classify cell burner boilers that convert to conventionally spaced burners, EPA adopt a ''case-by-case policy wherein each installation is evaluated on its own merits.'' Docket Item IV–D–051 at 4.

In response to these comments, the December 19, 1996 rule established the date of enactment of title IV (November 15, 1990) as the cutoff date for classifying converted cell burners as wall-fired boilers. Section 407 does not specifically address how to categorize cell burners that are converted so that they are no longer applying cell burner technology. EPA took the approach of applying the statutory boiler category of ''units applying cell burner technology'' as of the date of enactment of title IV. Under the December 19, 1996 rule, the commenter's unit with non-plug-in combustion controls installed in 1989 is a wall-fired boiler with NO_X limit of 0.46 lb/mmBtu, and the unit with non-plug-in combustion controls installed in 1991 is cell burner boiler with NO_X limit of 0.68 lb/mmBtu.

In response to petitions for review of the December 19, 1996 rule, the U.S. Court of Appeals for D.C. upheld all provisions of the rule except for the provision addressing the treatment of cell burner boilers with non-plug-in combustion controls as wall-fired boilers. *Appalachian Power* v. *EPA*, 135 F.3d 791, 822 (D.C. Cir. 1998). The Court vacated, and remanded that rule provision to EPA. *Id.* The Court explained that:

> the fact that no retrofitted cell burner [i.e., no cell burner with non-plug-in combustion controls] can achieve the * * * emission limit [for wall-fired boilers] using only the technology Congress authorized for setting that limit (low NO_X burner technology) is evidence that retrofitted cell burners are not the functional equivalent of wall-fired boilers, as measured by congressional concerns. 135 F.3d at 821.

In today's action, EPA is revising the December 17, 1996 rule to remove the provision vacated by the Court in *Appalachian Power* and, in light of the Court's opinion, has decided to take no further action on this matter. As a result, boilers subject to the NO_X limit starting in 2000 and originally constructed as cell burner boilers will be subject to the NO_X limit for cell burner boilers, regardless of whether or when they are modified through the installation of non-plug-in combustion controls. Today's rule revision does not address or change in any respect the compliance dates, which are in the existing regulations and which the Court upheld in *Appalachian Power*, for any units subject to the NO_X limits under the Acid Rain Program.

IV. Administrative Requirements

A. Executive Order 12866: Regulatory Planning and Review

Under Executive Order 12866, 58 FR 51735 (October 4, 1993), the Administrator must determine whether the regulatory action is ''significant'' and therefore subject to Office of Management and Budget (OMB) review and the requirements of the Executive Order. The Order defines ''significant regulatory action'' as one that is likely to result in a rule that may:

(1) Have an annual effect on the economy of $100 million or more or adversely affect in a material way the economy, a sector of the economy, productivity, competition, jobs, the environment, public health or safety, or State, local, or tribal governments or communities;

(2) Create a serious inconsistency or otherwise interfere with an action taken or planned by another agency;

(3) Materially alter the budgetary impact of entitlements, grants, user fees, or loan programs or the rights and obligations of recipients thereof; or

(4) Raise novel legal or policy issues arising out of legal mandates, the President's priorities, or the principles set forth in the Executive Order.

Pursuant to the terms of Executive Order 12866, OMB has determined that today's final rule is not a ''significant regulatory action'' and therefore is not subject to OMB review.

B. Executive Order 12875: Enhancing Intergovernmental Partnerships

Under Executive Order 12875, EPA may not issue a regulation that is not required by statute and that creates a mandate upon a State, local or tribal government, unless the Federal government provides the funds necessary to pay the direct compliance costs incurred by those governments or unless EPA consults with those governments. If EPA complies by consulting, Executive Order 12875 requires EPA provide to the Office of Management and Budget a description of the extent of EPA's prior consultation with representatives of affected State, local and tribal governments, the nature of their concerns, copies of any written communications from the governments, and a statement supporting the need to issue the regulation. In addition, Executive Order 12875 requires EPA to develop an effective process permitting elected officials and other representatives of State, local and tribal governments ''to provide meaningful and timely input in the development of regulatory proposals containing significant unfunded mandates.''

Today's final rule does not create a mandate on State, local or tribal governments and does not impose any enforceable duties on these entities. EPA projects that the rule will affect only one boiler, by increasing the level of the boiler's NO_X emission limit under title IV. Moreover, the boiler is not owned or operated by a State, local, and tribal government. Accordingly, the requirements of section 1(a) of Executive Order 12875 do not apply to this rule.

C. Executive Order 13084: Consultation and Coordination With Indian Tribal Governments

Under Executive Order 13084, EPA may not issue a regulation that is not required by statute, that significantly or uniquely affects the communities of Indian tribal governments, and that imposes substantial direct compliance costs on those communities, unless the Federal government provides the funds necessary to pay the direct compliance costs incurred by the tribal governments or unless EPA consults with those governments. If EPA complies by consulting, EPA must provide to the Office of Management and Budget, in a separately identified section of the preamble to the rule, a description of the extent of EPA's prior consultation with representatives of affected tribal governments, a summary of the nature of their concerns, and a statement supporting the need to issue the regulation. In addition, Executive Order 13084 requires EPA to develop an effective process permitting elected and other representatives of Indian tribal governments ''to provide meaningful and timely input in the development of regulatory policies on matters that significantly or uniquely affect their communities.''

Today's final rule does not significantly or uniquely effect, or impose any substantial direct compliance costs on, the communities of Indian tribal governments. The rule does not impose any enforceable duties on these entities. Accordingly, the requirements of section 3(b) of Executive Order 13084 do not apply to this rule.

D. Unfunded Mandates Act

Title II of the Unfunded Mandates Reform Act of 1995 (UMRA), Pub. L. 104–4, establishes requirements for federal agencies to assess the effects of their regulatory actions on State, local, and tribal governments and the private

sector. Under section 202 of UMRA, EPA generally must prepare a written statement, including a cost-benefit analysis, before promulgating a proposed or final rule that includes a federal mandate that may result in expenditure by State, local, and tribal governments, in aggregate, or by the private sector, of $100 million or more in any one year. Section 205 generally requires that, before promulgating a rule for which a written statement must be prepared, EPA must identify and consider a reasonable number of regulatory alternatives and adopt the least costly, most cost-effective, or least burdensome alternative that achieves the objectives of the rule. The provisions of section 205 do not apply when they are inconsistent with applicable law. Moreover, section 205 allows EPA to adopt an alternative other than the least costly, most cost-effective, or least burdensome alternative if the Administrator explains why that alternative was not adopted. Finally, section 203 requires that, before establishing any regulatory requirements that may significantly or uniquely affect small governments, EPA must have developed a small government agency plan. The plan must provide for notifying any potentially affected small governments to have meaningful and timely input in the development of EPA regulatory proposals with significant federal intergovernmental mandates, and informing, educating, and advising small governments on compliance with the regulatory requirements.

Because today's rule is estimated to result in the expenditure by State, local, and tribal governments or the private sector of less than $100 million in any one year, the Agency has not prepared a budgetary impact statement or specifically addressed the selection of the least costly, most cost-effective, or least burdensome alternative. Because small governments will not be significantly or uniquely affected by this rule, the Agency is not required to develop a plan with regard to small governments.

As discussed above, EPA projects that today's final rule will affect only one boiler, by increasing the level of the boiler's NO_X emission limit under title IV. Moreover, the boiler is not owned or operated by a State, local, and tribal government.

E. Paperwork Reduction Act

Today's final revisions to parts 72 and 73 will not impose any new information collection burden subject to the Paperwork Reduction Act (44 U.S.C. 3501, *et seq.*). OMB has previously approved the information collection requirements contained in the Acid Rain Nitrogen Oxides Emission Reduction Program regulations, 40 CFR part 76, under the provisions of the Paperwork Reduction Act, 44 U.S.C. 3501, *et seq. See* OMB Control Number 2060–0258.

Burden means the total time, effort, or financial resources expended by persons to generate, maintain, retain, or disclose or provide information to or for a Federal agency. This includes the time needed to review instructions; develop, acquire, install, and utilize technology and systems for the purposes of collecting, validating, and verifying information, processing and maintaining information, and disclosing and providing information; adjust the existing ways to comply with any previously applicable instructions and requirements; train personnel to be able to respond to a collection of information; search data sources; complete and review the collection of information; and transmit or otherwise disclose the information.

Copies of the previously approved ICR may be obtained from the Director, Regulatory Information Division; EPA; 401 M St. SW (mail code 2137); Washington, DC 20460 or by calling (202) 564–2740. Include the ICR and/or OMB number in any correspondence.

F. Regulatory Flexibility

The Regulatory Flexibility Act (RFA), 5 U.S.C. 601, *et seq.*, generally requires an agency to conduct a regulatory flexibility analysis of any rule subject to notice and comment rulemaking requirements unless the agency certifies that the rule will not have a significant economic impact on a substantial number of small entities. Small entities include small businesses, small not-for-profit enterprises, and small government jurisdictions.

As discussed above, EPA projects that today's final rule will affect only one boiler, by increasing the level of the boiler's NO_X emission limit under title IV. Moreover, the boiler is not owned or operated by a small entity. For these reasons, EPA has determined that this rule will not have a significant economic impact on a substantial number of small entities.

G. Applicability of Executive Order 13045: Children's Health Protection

Executive Order 13045 (62 FR 19885, April 29, 1997) applies to any rule if EPA determines (1) that the rule is economically significant as defined under Executive Order 12866, and (2) that the environmental health or safety risk addressed by the rule has a disproportionate effect on children. If the regulatory action meets both criteria, EPA must evaluate the environmental health or safety effects of the planned rule on children and explain why the planned regulation is preferable to other potentially effective and reasonably feasible alternatives considered by EPA.

Today's final rule is not subject to Executive Order 13045, because the action is not economically significant and does not address an environmental health or safety risk that may disproportionately affect children.

H. National Technology Transfer and Advancement Act

Section 12(d) of the National Technology Transfer and Advancement Act of 1995 (NTTAA), Pub L. 104–113, § 12(d) (15 U.S.C. 272 note), directs EPA to use voluntary consensus standards in its regulatory activities unless to do so would be inconsistent with applicable law or otherwise impractical. Voluntary consensus standards are technical standards (e.g., materials specifications, test methods, sampling procedures, or business practices) that are developed or adopted by voluntary consensus standards bodies. The NTTAA requires EPA to provide Congress, through OMB, explanations when the Agency decides not to use available and applicable voluntary consensus standards.

Today's final rule does not involve any technical standards that would require Agency consideration of voluntary consensus standards pursuant to section 12(d) of the NTTAA.

I. Submission to Congress and the General Accounting Office

The Congressional Review Act, 5 U.S.C. 801, *et seq.*, as added by the Small Business Regulatory Enforcement Fairness Act of 1996, generally provides that before a rule may take effect, the agency promulgating the rule must submit a rule report, which includes a copy of the rule, to each House of the Congress and to the Comptroller General of the United States. EPA will submit a report containing this rule and other required information to the U.S. Senate, the U.S. House of Representatives, and the Comptroller General of the United States prior to publication of the rule in the **Federal Register**. A major rule cannot take effect until 60 days after it is published in the **Federal Register**. Today's final rule is not a ''major rule'' as defined by 5 U.S.C. 804(2).

List of Subjects in 40 CFR Part 76

Environmental protection, Acid rain program, Air pollution control, Electric utilities, Nitrogen oxides.

Dated: October 5, 1999.

Carol M. Browner,

Administrator.

For the reasons set out in the preamble, title 40, chapter I of the Code of Federal Regulations is amended as follows:

PART 76—[AMENDED]

1. The authority citation for part 76 continues to read as follows:

Authority: 42 U.S.C. 7601 and 7651, *et seq.*

2. Section 76.6 is amended by removing from paragraph (a)(1) the words ''after November 15, 1990'' and the entire last sentence.

[FR Doc. 99–26658 Filed 10–14–99; 8:45 am]

BILLING CODE 6560–50–P

ENVIRONMENTAL PROTECTION AGENCY

40 CFR Part 180

[OPP–300915; FRL–6380–4]

RIN 2070–AB78

Rhizobium Inoculants; Exemption From the Requirement of a Tolerance

AGENCY: Environmental Protection Agency (EPA).

ACTION: Final rule.

SUMMARY: This regulation establishes an exemption from the requirement of a tolerance for residues of the *Rhizobium* inoculants (pure strains of *Rhizobium spp.* bacteria [e.g. *Sinorhizobium, Bradyrhizobium & Rhizobium*]; hereinafter referred to as *Rhizobium* inoculants) when used as inert ingredients in pesticide formulations applied to all leguminous food commodities. This would not include strains expressing rhizobitoxine or strains deliberately altered to expand the range of antibiotic resistance. EPA is establishing this regulation on its own initiative. EPA submitted a proposed rule under the Federal Food, Drug, and Cosmetic Act, as amended by the Food Quality Protection Act of 1996 requesting an exemption from the requirement of a tolerance. This regulation eliminates the need to establish a maximum permissible level for residues of Rhizobium inoculants.

DATES: This regulation is effective October 15, 1999. Objections and requests for hearings, identified by docket control number OPP–300915, must be received by EPA on or before December 14, 1999.

ADDRESSES: Written objections and hearing requests may be submitted by mail, in person, or by courier. Please follow the detailed instructions for each method as provided in Unit VIII. of the ''SUPPLEMENTARY INFORMATION'' section. To ensure proper receipt by EPA, your objections and hearing requests must identify docket control number OPP–300915 in the subject line on the first page of your response.

FOR FURTHER INFORMATION CONTACT: By mail: Edward Allen, Biological Pesticides and Pollution Prevention Division (7511C), Office of Pesticide Programs, Environmental Protection Agency, 401 M St., SW., Washington, DC 20460. Office location, telephone number and e-mail: 9th Floor, Crystal Mall 2 (CM #2), 1921 Jefferson Davis Hwy., Arlington, VA, (703) 308–8699; e-mail: allen.edward@epamail.epa.gov.

SUPPLEMENTARY INFORMATION:

I. General Information

A. Does This Action Apply to Me?

You may be affected by this action if you are an agricultural producer, food manufacturer, or pesticide manufacturer. Potentially affected categories and entities may include, but are not limited to:

Categories	NAICS	Examples of Potentially Affected Entities
Industry	111 112 311 32532	Crop production Animal production Food manufacturing Pesticide manufacturing

This listing is not intended to be exhaustive, but rather provides a guide for readers regarding entities likely to be affected by this action. Other types of entities not listed in the table could also be affected. The North American Industrial Classification System (NAICS) codes have been provided to assist you and others in determining whether or not this action might apply to certain entities. If you have questions regarding the applicability of this action to a particular entity, consult the person listed in the ''FOR FURTHER INFORMATION CONTACT'' section.

B. How Can I Get Additional Information, Including Copies of This Document and Other Related Documents?

1. *Electronically.* You may obtain electronic copies of this document, and certain other related documents that might be available electronically, from the EPA Internet Home Page at http://www.epa.gov/. To access this document, on the Home Page select ''Laws and Regulations'' and then look up the entry for this document under the ''**Federal Register**--Environmental Documents.'' You can also go directly to the **Federal Register** listings at http://www.epa.gov/fedrgstr/.

2. *In person.* The Agency has established an official record for this action under docket control number OPP–300915. The official record consists of the documents specifically referenced in this action, and other information related to this action, including any information claimed as Confidential Business Information (CBI). This official record includes the documents that are physically located in the docket, as well as the documents that are referenced in those documents. The public version of the official record does not include any information claimed as CBI. The public version of the official record, which includes printed, paper versions of any electronic comments submitted during an applicable comment period is available for inspection in the Public Information and Records Integrity Branch (PIRIB), Rm. 119, CM #2, 1921 Jefferson Davis Hwy., Arlington, VA, from 8:30 a.m. to 4 p.m., Monday through Friday, excluding legal holidays. The PIRIB telephone number is (703) 305–5805.

II. Background and Statutory Findings

In the **Federal Register** of May 19, 1999 (64 FR 27223) (FRL–6074–3), EPA issued a proposed rule pursuant to section 408 of the Federal Food, Drug, and Cosmetic Act (FFDCA), 21 U.S.C. 346a, as amended by the Food Quality Protection Act (FQPA) (Public Law 104–170). This rule was proposed by EPA on its on initiative. The rule included a summary of the petition prepared by EPA. There were no comments received in response to the proposed rule.

The petition requested that 40 CFR 180.1001(c) be amended by establishing an exemption from the requirement of a tolerance for residues of *Rhizobium* inoculants.

Section 408(b)(2)(A)(i) of the FFDCA allows EPA to establish an exemption from the requirement for a tolerance (the legal limit for a pesticide chemical residue in or on a food) only if EPA determines that the tolerance is ''safe.'' Section 408(b)(2)(A)(ii) defines ''safe'' to mean that ''there is a reasonable certainty that no harm will result from aggregate exposure to the pesticide chemical residue, including all anticipated dietary exposures and all other exposures for which there is reliable information.'' This includes exposure through drinking water and in residential settings, but does not include occupational exposure. Section

408(b)(2)(C) requires EPA to give special consideration to exposure of infants and children to the pesticide chemical residue in establishing a tolerance and to ''ensure that there is a reasonable certainty that no harm will result to infants and children from aggregate exposure to the pesticide chemical residue....''

EPA performs a number of analyses to determine the risks from aggregate exposure to pesticide residues. First, EPA determines the toxicity of pesticides. Second, EPA examines exposure to the pesticide through food, drinking water, and through other exposures that occur as a result of pesticide use in residential settings.

III. Toxicological Profile

Consistent with section 408(b)(2)(D) of FFDCA, EPA has reviewed the available scientific data and other relevant information in support of this action and considered its validity, completeness and reliability and the relationship of this information to human risk. EPA has also considered available information concerning the variability of the sensitivities of major identifiable subgroups of consumers, including infants and children. The nature of the toxic effects caused by *Rhizobium* inoculants are discussed in this unit.

The inoculants that are the subject of this exemption are pure stains of bacteria in the genera *Rhizobium*, *Sinorhizobium* or *Bradyrhizobium*. *Rhizobium* species are found naturally in soil and are agriculturally important as they form a symbiosis with the roots of leguminous plants such as green beans, alfalfa and soybeans. This symbiosis is a controlled bacterial infection of the root cortical cells and results in root nodules formation. These root nodules biologically fix atmospheric nitrogen into a form readily useable by plants.

There are no reports in the literature of these *Rhizobium* bacteria causing disease or injury to man or other animals (USEPA/OPPT ''Risk Assessment, Commercialization Request for P–92–403, *Sinorhizobium* (*Rhizobium*) meliloti RMBPC–2,'' May 1997). There are reports of *Rhizobium* bacteria producing a toxin (rhizobitoxine) that can affect the growth of legume plants nodulated with these strains. It is unlikely that any *Rhizobium* inoculants that are the subject of this exemption would be developed which express rhizobitoxine due to the adverse effects they have on the host plant. However, EPA feels it is appropriate to exclude *Rhizobium* strains intentionally developed to express rhizobitoxine from this inert clearance because of possible additional human exposure to rhizobitoxine.

EPA believes that any intentional alteration in the range of antibiotic resistance of *Rhizobium* species should be considered for its impact on the proliferation of antibiotic resistance traits in clinically important pathogenic bacteria. It is common knowledge that all bacteria, including these *Rhizobium* species, have inherent resistance to certain antibiotics. It is also known that bacteria, especially clinical strains, have developed or acquired antibiotic resistance due to widespread use of antibioitcs. The exclusion of *Rhizobium* strains with altered antibiotic resistance from this tolerance exemption discourages the use of antibiotic resistance genes, especially those genes with resistance to clincally important antibiotics. EPA therefore excludes any *Rhizobium* species with an intentionally expanded range of antibiotic resistance traits from this exemption.

IV. Aggregate Exposures

In examining aggregate exposure, FFDCA section 408 directs EPA to consider available information concerning exposures from the pesticide residue in food and all other non-occupational exposures, including drinking water from ground water or surface water and exposure through pesticide use in gardens, lawns, or buildings (residential and other indoor uses).

Consistent with section 408(c)(2)(B) of FFDCA, EPA has reviewed the available scientific data and other relevant information in support of the proposed action. EPA has sufficient data to assess the hazards of *Rhizobium* inoculants in or on all leguminous food commodities. EPA's assessment of the dietary exposures and risks associated with establishing these tolerances are as follows.

The data available in the public literature, EPA's Biotechnology Science Advisory Committee's reports on genetically engineered *Rhizobium* species and other relevant material have been evaluated. As part of the EPA policy statement on inert ingredients published in the **Federal Register** of April 22, 1987 (52 FR 13305), EPA set forth a list of studies which would generally be used to evaluate the risks posed by the presence of an inert ingredient in a pesticide formulation. However, where it can be determined that the inert ingredient will present minimal or no risk, EPA generally does not require some or all of the listed studies to rule on the proposed tolerance or exemption from the requirement of a tolerance for an inert ingredient.

Dietary Exposure

For the purposes of assessing the potential dietary exposure under this exemption, EPA considered that under this exemption *Rhizobium* inoculants could be present in all raw and processed agricultural commodities and drinking water and that non-occupational, non-dietary exposure was possible. The intended use pattern as a seed or soil inoculant lessens the likelihood of contact with humans other than occupational exposure. The likelihood that a soil bacterium such as *Rhizobium* will enter drinking water in significant numbers is remote considering the natural filtration of the soil profile as water percolates to the water table and the fact that many water supplies are treated prior to distribution in municipal systems (USEPA/OPPT, Exposure Assessment for Commercialization of a Recombinant Strain of *Rhizobium* meliloti, RMBPC–2, December 1994). Even if exposure occurred, the lack of reports of disease in man or animals indicates there is no risk for these exposures. Therefore, EPA concluded that, based on this inoculant's use, there are no concerns for risks associated with any potential exposure scenarios that are reasonably foreseeable.

V. Cumulative Effects

Section 408(b)(2)(D)(v) of FFDCA requires that, when considering whether to establish, modify, or revoke a tolerance or tolerance exemption, the Agency consider ''available information'' concerning the cumulative effects of a particular chemical's residues and ''other substances that have a common mechanism of toxicity.'' In the case of the *Rhizobium* inoculants, as limited, there is lack of toxicity to humans and other animal species as well as no information in the literature indicating a cumulative effect with any other compound. Therefore, a cumulative risk assessment is not necessary.

VI. Determination of Safety for U.S. Population, Infants and Children

Based on the information in this preamble, EPA concludes that there is a reasonable certainty of no harm from aggregate exposure to *Rhizobium* inoculants residues. Accordingly, EPA finds that exempting *Rhizobium* inoculants from the requirement of a tolerance will be safe. EPA believes these bacteria present no dietary risk under any reasonably foreseeable circumstances.

FFDCA section 408 provides that EPA shall apply an additional tenfold margin of safety for infants and children in the case of threshold effects to account for prenatal and postnatal toxicity and the completeness of the data base unless EPA concludes that a different margin of safety will be safe for infants and children. Margins of safety are incorporated into EPA risk assessments either directly through the use of margin of exposure analysis or through using uncertainty (safety) factors in calculating a dose level that poses no appreciable risk to humans.

VII. Other Considerations

A. Endocrine Disruptors

The Agency has no information to suggest that *Rhizobium* inoculants will adversely affect the immune or endocrine systems. The Agency is not requiring information on the endocrine effects of this microbial pesticide at this time; Congress has allowed 3 years after August 3, 1996, for the Agency to implement a screening program with respect to endocrine effects.

B. International Tolerances

There are no CODEX tolerances or international tolerance exemptions for *Rhizobium* inoculants at this time.

VIII. Objections and Hearing Requests

Under section 408(g) of the FFDCA, as amended by the FQPA, any person may file an objection to any aspect of this regulation and may also request a hearing on those objections. The EPA procedural regulations which govern the submission of objections and requests for hearings appear in 40 CFR part 178. Although the procedures in those regulations require some modification to reflect the amendments made to the FFDCA by the FQPA of 1996, EPA will continue to use those procedures, with appropriate adjustments, until the necessary modifications can be made. The new section 408(g) provides essentially the same process for persons to ''object'' to a regulation for an exemption from the requirement of a tolerance issued by EPA under new section 408(d), as was provided in the old FFDCA sections 408 and 409. However, the period for filing objections is now 60 days, rather than 30 days.

A. What Do I Need To Do To File an Objection or Request a Hearing?

You must file your objection or request a hearing on this regulation in accordance with the instructions provided in this unit and in 40 CFR part 178. To ensure proper receipt by EPA, you must identify docket control number OPP–300915 in the subject line on the first page of your submission. All requests must be in writing, and must be mailed or delivered to the Hearing Clerk on or before December 14, 1999.

1. *Filing the request*. Your objection must specify the specific provisions in the regulation that you object to, and the grounds for the objections (40 CFR 178.25). If a hearing is requested, the objections must include a statement of the factual issues(s) on which a hearing is requested, the requestor's contentions on such issues, and a summary of any evidence relied upon by the objector (40 CFR 178.27). Information submitted in connection with an objection or hearing request may be claimed confidential by marking any part or all of that information as CBI. Information so marked will not be disclosed except in accordance with procedures set forth in 40 CFR part 2. A copy of the information that does not contain CBI must be submitted for inclusion in the public record. Information not marked confidential may be disclosed publicly by EPA without prior notice.

Mail your written request to: Office of the Hearing Clerk (1900), Environmental Protection Agency, 401 M St., SW., Washington, DC 20460. You may also deliver your request to the Office of the Hearing Clerk in Rm. M3708, Waterside Mall, 401 M St., SW., Washington, DC 20460. The Office of the Hearing Clerk is open from 8 a.m. to 4 p.m., Monday through Friday, excluding legal holidays. The telephone number for the Office of the Hearing Clerk is (202) 260–4865.

2. *Tolerance fee payment*. If you file an objection or request a hearing, you must also pay the fee prescribed by 40 CFR 180.33(i) or request a waiver of that fee pursuant to 40 CFR 180.33(m). You must mail the fee to: EPA Headquarters Accounting Operations Branch, Office of Pesticide Programs, P.O. Box 360277M, Pittsburgh, PA 15251. Please identify the fee submission by labeling it ''Tolerance Petition Fees.''

EPA is authorized to waive any fee requirement ''when in the judgement of the Administrator such a waiver or refund is equitable and not contrary to the purpose of this subsection.'' For additional information regarding the waiver of these fees, you may contact James Tompkins by phone at (703) 305–5697, by e-mail at *tompkins.jim@epa.gov*, or by mailing a request for information to Mr. Tompkins at Registration Division (7505C), Office of Pesticide Programs, Environmental Protection Agency, 401 M St., SW., Washington, DC 20460.

If you would like to request a waiver of the tolerance objection fees, you must mail your request for such a waiver to: James Hollins, Information Resources and Services Division (7502C), Office of Pesticide Programs, Environmental Protection Agency, 401 M St., SW., Washington, DC 20460.

3. *Copies for the Docket*. In addition to filing an objection or hearing request with the Hearing Clerk as described in Unit VIII.A. of this preamble, you should also send a copy of your request to the PIRIB for its inclusion in the official record that is described in Unit I.B.2. of this preamble. Mail your copies, identified by docket number OPP–300915, to: Public Information and Records Integrity Branch, Information Resources and Services Division (7502C), Office of Pesticide Programs, Environmental Protection Agency, 401 M St., SW., Washington, DC 20460. In person or by courier, bring a copy to the location of the PIRIB described in Unit I.B.2. of this preamble. You may also send an electronic copy of your request via e-mail to: *opp-docket@epa.gov*. Please use an ASCII file format and avoid the use of special characters and any form of encryption. Copies of electronic objections and hearing requests will also be accepted on disks in WordPerfect 6.1/8.0 file format or ASCII file format. Do not include any CBI in your electronic copy. You may also submit an electronic copy of your request at many Federal Depository Libraries.

B. When Will the Agency Grant a Request for a Hearing?

A request for a hearing will be granted if the Administrator determines that the material submitted shows the following: There is a genuine and substantial issue of fact; there is a reasonable possibility that available evidence identified by the requestor would, if established, resolve one or more of such issues in favor of the requestor, taking into account uncontested claims or facts to the contrary; and resolution of the factual issues(s) in the manner sought by the requestor would be adequate to justify the action requested (40 CFR 178.32).

IX. Regulatory Assessment Requirements

This final rule establishes an exemption from the tolerance requirement under section 408(d) of the FFDCA in response to a petition submitted to the Agency. The Office of Management and Budget (OMB) has exempted these types of actions from review under Executive Order 12866, entitled *Regulatory Planning and Review* (58 FR 51735, October 4, 1993). This final rule does not contain any information collections subject to OMB approval under the Paperwork

Reduction Act (PRA), 44 U.S.C. 3501 *et seq.*, or impose any enforceable duty or contain any unfunded mandate as described under Title II of the Unfunded Mandates Reform Act of 1995 (UMRA) (Public Law 104–4). Nor does it require prior consultation with State, local, and tribal government officials as specified by Executive Order 12875, entitled *Enhancing the Intergovernmental Partnership* (58 FR 58093, October 28, 1993) and Executive Order 13084, entitled *Consultation and Coordination with Indian Tribal Governments* (63 FR 27655, May 19, 1998), or special consideration of environmental justice related issues under Executive Order 12898, entitled *Federal Actions to Address Environmental Justice in Minority Populations and Low-Income Populations* (59 FR 7629, February 16, 1994) or require OMB review in accordance with Executive Order 13045, entitled *Protection of Children from Environmental Health Risks and Safety Risks* (62 FR 19885, April 23, 1997). The Agency has determined that this action will not have a substantial direct effect on States, on the relationship between the national government and the States, or on the distribution of power and responsibilities among the various levels of government, as specified in Executive Order 12612, entitled *Federalism* (52 FR 41685, October 30, 1987). This action does not alter the relationships or distribution of power and responsibilities established by Congress in the preemption provisions of the Federal Food, Drug, and Cosmetic Act, 21 U.S.C. 346a(b)(4). This action directly regulates growers, food processors, food handlers and food retailers, not States. This action does not involve any technical standards that would require Agency consideration of voluntary consensus standards pursuant to section 12(d) of the National Technology Transfer and Advancement Act of 1995 (NTTAA), Public Law 104–113, section 12(d) (15 U.S.C. 272 note). In addition, since tolerances and exemptions that are established on the basis of a petition under FFDCA section 408(d), such as the exemption in this final rule, do not require the issuance of a proposed rule, the requirements of the Regulatory Flexibility Act (RFA) (5 U.S.C. 601 *et seq.*) do not apply.

X. Submission to Congress and the Comptroller General

The Congressional Review Act, 5 U.S.C. 801 *et seq.*, as added by the Small Business Regulatory Enforcement Fairness Act of 1996, generally provides that before a rule may take effect, the agency promulgating the rule must submit a rule report, which includes a copy of the rule, to each House of the Congress and to the Comptroller General of the United States. EPA will submit a report containing this rule and other required information to the U.S. Senate, the U.S. House of Representatives, and the Comptroller General of the United States prior to publication of this rule in the **Federal Register**. This rule is not a ''major rule'' as defined by 5 U.S.C. 804(2).

List of Subjects in 40 CFR Part 180

Environmental protection, Administrative practice and procedure, Agricultural commodities, Pesticides and pests, Reporting and recordkeeping requirements.

Dated: September 29, 1999.

Marcia E. Mulkey,
Director, Office of Pesticide Programs.

Therefore, 40 CFR chapter I is amended as follows:

PART 180— [AMENDED]

1. The authority citation for part 180 continues to read as follows:

Authority: 21 U.S.C. 321(q), 346(a) and 371.

2. In section 180.1001, the table in paragraph (c) is amended by adding alphabetically the following inert ingredient:

§ 180.1001 Exemptions from the requirement of a tolerance.

* * * * *

(c) * * *

Inert ingredients	Limits	Uses
*	* * * * *	*
Rhizobium inoculants (e.g. *Sinorhizobium, Bradyrhizobium & Rhizobium*).	.....	All leguminous food commodities
*	* * * * *	*

[FR Doc. 99–26862 Filed 10–14–99; 8:45 am]

BILLING CODE 6560–50–F

COMMITTEE FOR PURCHASE FROM PEOPLE WHO ARE BLIND OR SEVERELY DISABLED

41 CFR Parts 51–2 and 51–5

Miscellaneous Amendments to Committee Regulations

AGENCY: Committee for Purchase From People Who Are Blind or Severely Disabled.

ACTION: Final rule.

SUMMARY: The Committee is changing its pricing and shipping regulations to make them consistent with new Committee pricing policies reflecting a preference for negotiated rather than formula-based fair market prices.

EFFECTIVE DATE: November 15, 1999.

ADDRESSES: Committee for Purchase From People Who Are Blind or Severely Disabled, Crystal Gateway 3, Suite 310, 1215 Jefferson Davis Highway, Arlington, Virginia 22202–4302.

FOR FURTHER INFORMATION CONTACT: G. John Heyer (703) 603–0665. Copies of this notice will be made available on request in computer diskette format.

SUPPLEMENTARY INFORMATION: The Committee is revising 41 CFR 51–2.7, the Committee's general fair market pricing regulation, to reflect the preference for negotiated prices set forth in the Committee's recently-adopted pricing policies and the methods of price-setting established by those policies. Paragraph (a) of 41 CFR 51–5.5 is revised to emphasize the statutory nature of the Committee's price-setting authority. This revision is intended to emphasize the exemption of the Committee's prices from a statutory requirement that cost or pricing data be submitted to contracting activities before a price can be negotiated and recommended to the Committee. Paragraph (d)(2) of 41 CFR 51–5.5 is revised to change the minimum time for a contracting activity to submit required wage determination paperwork to the appropriate central nonprofit agency

from 90 to 60 days before the beginning of a new service period, and to eliminate the requirement for submission of Standard Form 98, which is no longer needed to learn the applicable wage determination rate. Paragraph (e) of 41 CFR 51–5.5 is revised to give more flexibility in pricing of special packaging and marking of products and to accommodate current contract documentation.

Prior to a November 16, 1994 change to the Committee's regulations (59 FR 59338), pricing and delivery terms for JWOD commodities, other than military resale commodities, were on an ''F.O.B. origin'' basis. The 1994 change permitted use of ''F.O.B. destination'' as an alternative. Since then, the Committee's commodity pricing policies have been revised to designate ''F.O.B. destination'' as the preferred pricing and delivery basis. ''F.O.B. origin'' pricing and delivery remain available as an alternative when the nonprofit agency and the Government contracting activity agree to use this basis. The current revision of the shipping regulation (41 CFR 51–5.6) reflects the change in Committee pricing policy by identifying ''F.O.B. destination'' as the preferred pricing and shipping basis for all JWOD commodities, with ''F.O.B. origin'' as a possible alternative basis.

Public Comments on the Proposed Rule

The Committee published the proposed rule in the **Federal Register** of August 2, 1999 (64 FR 41882). No comments were received. Accordingly, the Committee's regulations are being amended as stated in the proposed rule.

Regulatory Flexibility Act

I certify that this revision of the Committee regulations will not have a significant economic impact on a substantial number of small entities because the revision clarifies program policies and does not essentially change the impact of the regulations on small entities.

Paperwork Reduction Act

The Paperwork Reduction Act does not apply to this final rule because it contains no new information collection or recordkeeping requirements as defined in that Act and its regulations.

Executive Order No. 12866

The Committee has been exempted from the regulatory review requirements of the Executive Order by the Office of Information and Regulatory Affairs. Additionally, the final rule is not a significant regulatory action as defined in the Executive Order.

List of Subjects in

41 CFR Part 51–2

Organization and functions (Government agencies)

41 CFR Part 51–5

Government procurement, Handicapped.

For the reasons set out in the preamble, parts 51–2 and 51–5 of Title 41, Chapter 51 of the Code of Federal Regulations are amended as follows:

1. The authority citation for parts 51–2 and 51–5 continues to read as follows:

Authority: 41 U.S.C. 46–48c.

PART 51–2—COMMITTEE FOR PURCHASE FROM PEOPLE WHO ARE BLIND OR SEVERELY DISABLED

2. Section 51–2.7 is revised to read as follows:

§ 51–2.7 Fair market price.

(a) The Committee is responsible for determining fair market prices, and changes thereto, for commodities and services on the Procurement List. The Committee establishes an initial fair market price at the time a commodity or service is added to the Procurement List. This initial price is based on Committee procedures, which permit negotiations between the contracting activity and the nonprofit agency which will produce or provide the commodity or service to the Government, assisted by the appropriate central nonprofit agency. If agreed to by the negotiating parties, the initial price may be developed using other methodologies specified in Committee pricing procedures.

(b) Prices are revised in accordance with changing market conditions under Committee procedures, which include negotiations between contracting activities and producing nonprofit agencies, assisted by central nonprofit agencies, or the use of economic indices, changes in nonprofit agency costs, or other methodologies permitted under these procedures.

(c) Recommendations for initial fair market prices, or changes thereto, shall be submitted jointly by the contracting activities and nonprofit agencies concerned to the appropriate central nonprofit agency. After review and analysis, the central nonprofit agency shall submit the recommended prices and methods by which prices shall be changed to the Committee, along with the information required by Committee pricing procedures to support each recommendation. The Committee will review the recommendations, revise the recommended prices where appropriate, and establish a fair market price, or change thereto, for each commodity or service which is the subject of a recommendation.

PART 51–5—CONTRACTING REQUIREMENTS

3. Section 51–5.5 is amended by revising paragraphs (a), (d)(2), and (e), to read as follows:

§ 51–5.5 Prices.

(a) The prices for items on the Procurement List are fair market prices established by the Committee under authority of the Javits-Wagner-O'Day Act (41 U.S.C. 47(b)).

* * * * *

(d) * * *

(2) Provide a copy of the new wage determination rate or the Department of Labor document stating that the wage determination rate is unchanged to the central nonprofit agency at least 60 days before the beginning of the new service period.

* * * * *

(e) If a contracting activity desires packing, packaging, or marking of products other than the standard pack or as provided in the Procurement List, any difference in cost shall be negotiated with the nonprofit agency.

4. Section 51–5.6 is revised to read as follows:

§ 51–5.6 Shipping.

(a) Except as provided in paragraph (b) of this section, commodities are sold to the Government on an ''F.O.B. destination'' basis, with delivery being accomplished when the shipment reaches the facility designated by the contracting activity. Time of delivery is when the shipment is released by the carrier and accepted by the contracting activity or its agent. In this delivery method, the nonprofit agency will normally use commercial bills of lading and will be responsible for any loss or damage to the goods occurring before the commodities reach the designated delivery point. The nonprofit agency will prepare and distribute commercial bills of lading, furnish delivery schedules, designate the carriers, and pay all shipping charges to specified delivery points.

(b) The Committee may determine that certain commodities are to be sold to the Government on an ''F.O.B. origin'' basis, with delivery being accomplished when a shipment is placed aboard the vehicle of the initial carrier. Time of delivery is when the shipment is released to and accepted by the initial carrier. In this delivery method, the nonprofit agency will normally use

Government bills of lading, and responsibility for loss or damage to the goods while in transit passes to the Government at the time the initial carrier accepts a shipment. If the contracting activity fails to furnish a Government bill of lading promptly, such failure shall be considered an excusable delay in delivery.

Dated: October 12, 1999.

Beverly L. Milkman,

Executive Director.

[FR Doc. 99–26987 Filed 10–14–99; 8:45 am]

BILLING CODE 6353–01–P

DEPARTMENT OF HEALTH AND HUMAN SERVICES

Office of the Secretary

45 CFR Part 96

RIN 0991–AA97

Block Grant Programs

AGENCY: Department of Health and Human Services (HHS).

ACTION: Final rule with comment period.

SUMMARY: This final rule amends the regulations of the Department of Health and Human Services (HHS) governing the administration of block grant programs. It updates the current regulations to reflect current statutory citations for the block grants. It establishes a requirement for grantees to submit obligation and expenditure reports for all of the block grants. Additionally, this rule establishes submission dates and completion dates for applications for funding from States and territories for Low-Income Home Energy Assistance Program (LIHEAP) and Social Services Block Grant Program (SSBG). It also establishes a completion date for applications for direct funding from Indian tribes and tribal organizations for LIHEAP and clarifies procedures related to the withholding of funds for these programs. In addition, it modifies the requirements for reallotment of funds under LIHEAP. This regulation also includes an amendment to § 96.82, regarding the required submission of reports on households applying for and receiving LIHEAP assistance that is being issued as an interim final rule with opportunity for comment.

DATES: *Effective Date:* This final rule and the interim § 96.82 are effective November 15, 1999, except that §§ 96.10(c), 96.10(d) and 96.49, are effective March 1, 2000. The information collection requirements contained in § 96.30 will take effect upon OMB approval.

Comment Period: Comments on § 96.82 will be considered, if received at the appropriate address, as provided below, no later than 5 p.m on December 14, 1999. We will not consider comments concerning provisions that remain unchanged from the July 17, 1992 or November 16, 1993 proposed rules or that were revised based on public comment.

ADDRESSES: Mail written comments on § 96.82 to Janet M. Fox, Director, Division of Energy Assistance, Office of Community Services, Administration for Children and Families, 370 L'Enfant Promenade SW, Washington, DC 20447.

The comments received in response to the requirements in § 96.82 may be inspected or reviewed at the above address, Monday through Friday, between 9 a.m. and 5 p.m., beginning one week after the publication of this rule.

FOR FURTHER INFORMATION CONTACT: Mike Herrell, 202/690–5739.

SUPPLEMENTARY INFORMATION:

Background

The Omnibus Budget Reconciliation Act of 1981 (Pub. L. 97–35) established seven block grants to be administered by the Department of Health and Human Services (HHS). Subsequent legislation repealed the Primary Care Block Grant. Additional legislation divided the Alcohol and Drug Abuse and Mental Health Services Block Grant into two, resulting in the Community Mental Health Services Block Grant and the Substance Abuse Prevention and Treatment Block Grant. An interim final regulation to implement the block grants was published in the **Federal Register** on October 1, 1981 (46 FR 48582) and the final regulation was issued on July 6, 1982 (47 FR 29472). Subsequent legislation changed certain provisions of the block grants and the regulation was modified several times. The regulation was modified most recently on May 1, 1995 (60 FR 21332) to address requirements for LIHEAP. Based on our experience in administering the block grants, we have identified several aspects of the block grant rules that require, or would benefit from, clarification. Some of those changes were proposed in a notice of proposed rulemaking (NPRM) issued by HHS for block grant programs dated July 17, 1992 (57 FR 31685) and are discussed below.

The Augustus F. Hawkins Human Services Reauthorization Act of 1990, Public Law 101–501, was enacted on November 3, 1990. Title VII of this public law contains amendments to the Low-Income Home Energy Assistance Act of 1981 (title XXVI of Pub. L. 97–35, as amended), including several changes affecting LIHEAP grantee program administration. An interim final rule published January 16, 1992, in the **Federal Register** (57 FR 1960 *et seq.*) promulgated regulatory changes for several provisions which were effective for fiscal years (FY) 1991 and FY 1992, including a leveraging incentive program. It also indicated that regulations concerning additional changes resulting from Public Law 101–501 would be issued at a later date. A final rule relating to the provisions included in the interim final rule was published on May 1, 1995 (60 FR 21332). An NPRM dated November 16, 1993 (58 FR 60498) proposed additional regulatory changes for provisions included in Public Law 101–501 that were scheduled to become effective in FY 1993 and FY 1994. The later changes concerned ''forward funding'' and the end of authority to transfer LIHEAP funds to other HHS block grants. Other provisions relating to application submission and completion dates were included in the NPRM. Some of the provisions included in the Department's NPRM of July 17, 1992, were also included in the November 16, 1993 NPRM.

This final rule includes provisions which were originally contained in both the NPRM issued by the Department of Health and Human Services on July 17, 1992 (57 FR 31685) and the NPRM issued on November 16, 1993 (58 FR 60498) concerning LIHEAP, CSBG and SSBG, all of which are administered by the Administration for Children and Families (ACF). It includes a due date for completion of applications for direct funding of Indian tribes and tribal organizations under LIHEAP. Other issues proposed in the NPRM of July 17, 1992 which address LIHEAP, CSBG, and SSBG as well as some of the other block grant programs which are administered by agencies of the Public Health Service (PHS), are also finalized in this rule. It clarifies procedures related to the withholding and reallotment of funds and requires obligation and expenditure reports. Some of those items in the July 17, 1992 NPRM which relate to the block grants that are administered by agencies of the PHS may be addressed in a separate action. Therefore, this final rule excludes the following sections relating to the block grants administered by the PHS contained in the July 1992 NPRM: 96.121, 96.122, 96.123 and 96.124. In addition, this final rule finalizes proposals from the November

16, 1993 NPRM. It establishes submission and completion dates for block grant applications from States and territories for LIHEAP and SSBG. It also codifies the end of transfer authority under LIHEAP. Since the publication of the November 16, 1993 NPRM, legislation changed the forward funding program year for LIHEAP to October 1 through September 30, the same dates as the current Federal fiscal year, but funded one year in advance. The issue of forward funding for LIHEAP is discussed below. Also, this final rule adds new provisions to update the regulation to reflect the current names and statutory citations for the block grants. The NPRM dated November 16, 1993 also included technical changes to § 96.82, concerning a statutorily required report on households assisted under the LIHEAP program. Subsequently, however, the Human Services Amendments of 1994 (Pub. L. 103–252) amended the statutory requirements applying to that report. This amendment includes changes to the existing regulations to reflect implementation of those new requirements, which we are issuing as an interim final rule with opportunity for comment.

Provisions in both the July 17, 1992 NPRM and the November 16, 1993 NPRM included provisions relating to requirements for CSBG. Since the publication of those NPRMs, new legislation has significantly amended certain provisions of the Community Services Block Grant Act. Accordingly, this final rule deletes the following provisions relating to CSBG: Sections 96.49(a), 96.92 and 96.95 of the July 17, 1992 NPRM and §§ 96.10(c)(1), 96.10(d)(1) and 96.49(a) of the November 16, 1993 NPRM.

The NPRM dated July 17, 1992 (57 FR 31682) allowed a comment period of 60 days. Thirteen letters were received in response to that NPRM and are discussed below. The NPRM dated November 16, 1993 allowed a 45-day comment period. Three letters were received in response to that NPRM and are also discussed below.

A final rule to replace the interim final rule of January 16, 1992 on the leveraging incentive program and other issues was published on May 1, 1995 (60 FR 21322). In some cases, provisions from the July 1992 and November 1993 NPRM's were included in that final rule, if they were related to issues already being addressed in that rule. This applies to §§ 96.14, 96.83, 96.84 and 96.87.

Waiver of Notice and Comment Procedures

The Human Services Amendments of 1994 (Pub. L. 103–252) amended section 2605(c)(1)(G) of the LIHEAP statute regarding data required to be submitted to the Department as part of a grantee's annual application for funds under the LIHEAP program. Section 96.82 of this amendment to the block grant statute, which implements these statutory changes, is being published in interim final form. The Administrative Procedures Act (5 U.S.C. 553(b)(B)) provides that, if the Department for good cause finds that a notice of proposed rulemaking (NPRM) is unnecessary, impracticable, or contrary to public interest, it may dispense with the NPRM if it incorporates a brief statement in the interim final rule of the reasons for doing so.

The Department finds that there is good cause to dispense with an NPRM with respect to proposed changes to § 96.82 of the block grant regulations. First, it is important that grantees have timely notice of the rules for operating their LIHEAP programs consistent with the 1994 statutory provisions. Second, LIHEAP grantees and interested parties were notified by information memorandum of the opportunity to comment on these requirements as part of the Department's request for approval by the Office of Management and Budget of the collection of the information. No objections were submitted to the information collection approval request.

We are interested in receiving formal comments on this interim final rule for § 96.82. We will review any comments which we receive by December 14, 1999. We will revise the rule, as appropriate, based on the comments we receive and our experience in implementing the requirement.

Forward Funding of LIHEAP. Sections in the November 16, 1993 NPRM relating to the program year dates are being deleted because of a change in the law. A new section, 2602(c), was added to the LIHEAP statute by Public Law 101–501. This section provided that LIHEAP funds would be available for obligation on the basis of a new ''program year'' of July 1 through June 30, rather than on the normal Federal fiscal year basis of October 1 to September 30. The law provided that this change from a fiscal year to a program year basis, known as ''forward funding'', would take place beginning in fiscal year (FY) 1993, and that it would be implemented by appropriating funds in the FY 1993 HHS appropriations law for a nine-month transition period of October 1, 1992 to June 30, 1993, and also for the new program year of July 1, 1993 to June 30, 1994, a period of 21 months.

The FY 1993 appropriations law for HHS (Pub. L. 102–394) provided funding for the regular Federal fiscal year 1993, which began October 1, 1992 and ended September 30, 1993. It also provided advance funding for FY 1994 to operate the program for a nine-month transition period of October 1, 1993 to June 30, 1994, thus providing partial implementation of forward funding a year later than authorized.

The FY 1994 appropriations law, Public Law 103–112, provided advance FY 1995 funds for the period beginning October 1, 1994. This left a three-month funding gap of July 1 to September 30, 1994. To eliminate that funding gap, an amendment to the Emergency Supplemental Appropriations Act of 1994 (Pub. L. 103–211) made the FY 1994 funds available until September 30, 1994.

The Budget of the United States Government for Fiscal Year 1995 requested funds for the normal Federal fiscal year of October 1, 1994 to September 30, 1995. Subsequently, Title III of the Human Services Amendments of 1994, Public Law 103–252, reauthorized LIHEAP and provided that the program year shall begin on October 1 of the fiscal year following the year in which the appropriation is made. Therefore, the reauthorization law, Public Law 103–252, opted for funding a program year that is on the same time frame as the Federal fiscal year, but funded one year in advance. Consequently, the changes which related to forward funding which were proposed in the NPRM dated November 16, 1993 (58 FR 60498) will not be implemented, since due dates for reports and other actions do not need to be changed to be consistent with the timetable for a new program year. Therefore, the information concerning forward funding and the resultant technical changes contained in that NPRM are deleted from §§ 96.10, 96.42, 96.49, 96.80, 96.81, 96.85 and 96.87. Throughout this current regulation, the dates proposed in the NPRM dated November 16, 1993 (58 FR 60498) for implementation during forward funding are deleted and the dates included are based on the Federal fiscal year.

Section-by-Section Analysis of Changes in the Regulations

Subpart A—Introduction

Section 96.1 Scope

Several changes have taken place in the block grants since these regulations

were first issued in 1981. We are amending this section, which specifies which programs are subject to the regulations, to reflect the current names and legal status of the block grants. Although these amendments were not in either the July 17, 1992 or the November 16, 1993 NPRMs, we are including them in the final rule since the changes are only technical in nature and reflect the statutory situation.

Specifically, we are revising paragraph (a) to show that the CSBG program is now covered by sections 671–683 of Public Law 97–35, as amended; deleting reference in paragraph (d) to the Primary Care Block Grant, which was repealed; and amending paragraph (e) to reflect the fact that the Maternal and Child Health Services Block Grant (MCH) program is found at 42 U.S.C. 701–709. We are also deleting reference in paragraph (c) to the Alcohol and Drug Abuse and Mental Health Services Block Grant, which has been repealed and replaced by the Community Mental Health Services Block Grant (CMHS) and the Substance Abuse Prevention and Treatment Block Grant (SAPT). CMHS and SAPT are now referenced in revised paragraphs (c) and (d).

Finally, we are revising paragraph (f) to clarify that these regulations also apply to the Empowerment Zones and Enterprise Communities programs enacted in 1993 as a part of the Social Services Block Grant statute. A question had been raised by eligible entities as to whether the block grant regulations or parts 74 and 92 of Departmental regulations applied to the Empowerment Zones and Enterprise Communities. This amendment will make clear that part 96, the block grant regulations, are applicable. This is consistent with guidance previously issued by the Department.

Section 96.2 Definitions

The Trust Territory of the Pacific Islands (TTPI) consisted of Micronesia, the Marshall Islands, and Palau for the first five years of the LIHEAP and CSBG programs. Two of the components of the TTPI, the Marshall Islands and Micronesia, entered into Compacts of Free Association with the United States in 1986, under which they were declared independent nations that will be associated with the United States for defense purposes during a 15-year transition period. Under the terms of those Compacts, allocations to the new Federated States of Micronesia and the Republic of the Marshall Islands under LIHEAP, CSBG, and several other Federal assistance programs were phased out over a three-year period, beginning in FY 1987. Beginning with FY 1990, they were no longer eligible to receive any LIHEAP or CSBG funding. Palau has also signed a Compact of Free Association, which went into effect at noon on October 1, 1994. As a result, no remaining entity is encompassed by the term, ''Trust Territory of the Pacific Islands''. The LIHEAP and CSBG allocations for the new Republic of Palau were also phased out over a three-year period, beginning in FY 1996. The allocation for the Republic of Palau was no more than 75% of its FY 1995 amount in FY 1996, no more than 50% in FY 1997, and no more than 25% in FY 1998. Beginning in FY 1999, no LIHEAP or CSBG funds will be allocated to the Republic of Palau. All three original components of TTPI (the Federated States of Micronesia, the Republic of the Marshall Islands, and the Republic of Palau) continue to receive funding under the block grants administered by agencies of the PHS, since they were exempt from the compacts' requirements to phase out funding.

To take account of changes in the Trust Territory, the NPRM dated July 17, 1992 (57 FR 31682) proposed to modify the definition of ''State'' as used in the block grant rule. This final rule will further modify that definition by deleting ''the Trust Territory of the Pacific Islands comprised of Palau'' since Palau's Compact of Free Association became effective after the publication of the July 1992 NPRM. We are also adding a statement that, for block grants administered by agencies of the PHS, ''States'' will include the Federated States of Micronesia, the Republic of the Marshall Islands, and the Republic of Palau.

No comments were received in response to § 96.2 of the NPRM. Therefore, the final rule is revised as described above.

Subpart B—General Procedures

Section 96.10 Prerequisites To Obtain Block Grant Funds

Form of application. In general, the block grant regulations provide States and other grantees with substantial discretion in preparing applications and related forms. The current section reads: ''No particular form is required for a State's application or the related submission required by statute.'' This language may be misleading, however, inasmuch as some block grant statutes do, in fact, require grantees to submit applications and other information in a particular form in order to ensure that the information is useful for statutorily intended purposes, e.g., Congressional oversight. Examples are the application requirements for MCH, CMHS and SAPT. The NPRM dated July 17, 1992 (57 FR 31682) proposed to modify subsection (a) to allow the Department to specify the form of an application when this is required or clearly contemplated by the authorizing statute.

Comments: Two comments were received in response to the proposal concerning the form of an application. One commenter indicated that the Department was proposing to specify the form of application to be submitted for CSBG funding. The other commenter indicated the fact that adding ''except where prescribed elsewhere in this rule'' to the current language is not all inclusive, especially since the above example omitted at least one other block grant statute, MCH, which explicitly requires the Secretary to provide a specific ''standard form'' for the States' applications. The commenter recommended that the rule be amended either to add this example or to clarify that exceptions include any program where the authorizing legislation specifically requires a particular form.

Response: Although the CSBG statute requires the specific content to be included in CSBG applications, no particular format is required. The format by regulation is at the discretion of the grantee.

The Department agrees with the commenter that the above example should include an additional statement that Title V of the MCH statute requires the Secretary to provide a specific ''standard form'' for the States' applications. Therefore, section 96.10(a) is amended to include this specific requirement. Furthermore, we have added a clarification to allow specific formats when authorizing legislation requires it.

In support of its commitment to Federalism, the Department will continue to make every effort to develop its application requirements and forms in close cooperation with the States, and where possible, the communities. For example, when developing the MCH application and annual report, the Maternal and Child Health Bureau developed new guidance and an automated reporting system based on the emerging concept of ''Performance Partnerships''. Not only did the Bureau meet regularly with a Block Grant Guidance Work Group made up largely of State and local MCH representatives, but the Bureau field tested the guidance and information system with 9 states and held a number of sessions at three separate national meetings with representatives of all State MCH and Children with Special Health Care

Needs Directors, as well as many local directors. The initial national sessions focused on discussing and reviewing the proposed guidance and performance partnership measures. Later sessions included hands on training in using the guidance that was provided by the Bureau and the nine test States.

Application Submission and Completion Dates for States and Territories For Block Grants. Due dates for submission and completion of State and territorial applications for LIHEAP, CSBG and SSBG were proposed by the November 16, 1993 NPRM to be added to the block grant regulations so that grant awards can be issued as close as possible to the beginning of a grant period.

The Cash Management Improvement Act of 1990, (CMIA, Pub. L. 101–453) imposes requirements for the timely transfer of funds between a Federal agency and a State and for the exchange of interest where transfers are not made in a timely fashion. The CMIA also requires States to minimize the time between the receipt of Federal funds and their disbursement by the State for program purposes. The CMIA applies to States and territories, but it does not apply to Indian tribes or tribal organizations.

The establishment of application due dates for States and territories will allow the agency sufficient time to process applications and issue awards in a timely manner, in order to minimize interest charges associated with the CMIA. The NPRM issued by the Department on July 17, 1992 (57 FR 31685) also proposed completion dates for tribal applications for the CSBG and LIHEAP. See below under § 96.49 for further discussion of tribal applications.

Because significant changes to the CSBG Act have been enacted since the publication of the NPRMs, we have deleted the provisions relating to CSBG application submission and completion dates from this final rule.

SSBG: The November 16, 1993 NPRM also proposed to establish the due date for SSBG applications as one month prior to the beginning of the SSBG State program year. State SSBG allocations are established by a formula based on population. Each fall, individual State allocations for the following Federal fiscal year, based on the projected Congressional appropriation, are published in the **Federal Register**. Unless the appropriation is enacted at a different level, the allocations published in the **Federal Register** the previous fall are the basis for determining the amount of the grant awards for the following fiscal year. For example, FY 1999 allocations were published in the **Federal Register** in the fall of 1998 for distribution to the States in Federal fiscal year 1999, beginning October 1, 1998. This approach gives the grantee plenty of time to plan its program activities.

For SSBG, accordingly, it was proposed that States and territories which operate on a Federal fiscal year basis submit applications (pre-expenditure reports) for funding by September 1 of the preceding fiscal year. It was also proposed that States and territories which operate their SSBG program on a July 1—June 30 basis submit their applications for funding by June 1 of the preceding funding period. For example, for States and territories which operate on the basis of the fiscal year which begins on October 1, 2000, and ends on September 30, 2001, the date of submission for applications would be September 1, 2000. For SSBG programs with a funding period which begins on July 1, 2000, and ends on June 30, 2001, the date of submission would be June 1, 2000. No date was proposed for completion of SSBG applications.

No comments were received in response to the proposal for submission dates for the SSBG program. Thus, the provision is adopted as proposed, with two exceptions. We have added the authority to allow the Department to agree to a later application submission date, in order to allow for unusual circumstances that may make meeting these deadlines difficult or impossible. In addition, we have changed the term ''Secretary'' used in the NPRM to ''Department'', to better reflect actual working relationships.

Therefore, the date for submission of SSBG applications is September 1 of the preceding fiscal year for those States which operate on a Federal fiscal year basis unless the Department agrees to a later date. The date for submission of applications for those States which operate on a July 1—June 30 basis is the preceding June 1 unless the Department agrees to a later date. States requesting a later submission date should provide proper documentation to the Department.

LIHEAP: For LIHEAP, it was proposed in the NPRM dated November 16, 1993 (58 FR 60498) that the submission date for applications be established as one month before the beginning of the new ''program year'' of July 1 to June 30. Thus, the due date for submission of the applications would be June 1, if forward funding were implemented.

Also in the NPRM, for LIHEAP, the final date for completion of applications from States and territories was proposed to be established as December 31 of the program year for which they were requesting funds, almost seven months after the due date for the submission of the applications.

Comment: One comment was received in response to the proposed LIHEAP submission dates and completion dates for States and territories. The commenter was in favor of the proposed LIHEAP submission date but did not think the completion date should be more than 60 days after submittal. The commenter expressed the belief that the Department was attempting to circumvent the requirements under the Cash Management Improvement Act (CMIA) and that grantees should receive a grant award notification before October 1 or December 31 of the program year.

Response: The Department disagrees with the assertion that we are trying to circumvent the requirements under the CMIA. If States submit their applications earlier, the Department will review them as soon as possible. Departmental review will be delayed only if the grantee fails to submit all the information required. The December 31 completion date requirement was proposed in order to give grantees the time to submit the required information, not to give the Department more time to review it.

It is the conclusion of the Department that since LIHEAP will continue to be operated on a normal fiscal year basis of October 1 to September 30, with funding scheduled to be appropriated one year in advance, the due date for submission of funding applications from States and territories will be established as September 1, one month prior to the beginning of the fiscal year, unless the Department agrees to a later date. We believe it is appropriate to require submission of the funding application prior to the start of the funding period, since the grantees will have been advised of the amount of their allocations (they should know the level or amount) one year in advance and thus will have had sufficient time for planning and to hold the required public hearings. The submission date of September 1 is also consistent with the submission date for applications for tribal grantees.

The Department agrees with the commenter that a period of almost seven months is not needed for review of the applications. However, based on past experience, since numerous applications from both States and tribes will be received at the same time, sixty days may not be sufficient time for the completion of reviews, notification of grantees concerning deficiencies in applications, and receipt of the grantees' responses. Therefore, as a compromise,

the due date for the completion of all information required by States and territories is being established as December 15 of the fiscal year for which they are requesting funds, 3½ months after the due date for the submission of the applications. For example, for fiscal year 2000, which begins on October 1, 1999 and ends on September 30, 2000, applications must be submitted by September 1, 1999 and must be completed by December 15, 1999, unless the Department agrees to a later date after proper documentation from the State.

As with the SSBG program, we have added the authority to allow the Department to agree to a later application submission or completion date, in order to allow for unusual circumstances that may make meeting these deadlines difficult or impossible, and we have changed the term ''Secretary'' to ''Department''.

Effective Date: Given the timing of publication of this final rule, there will not be time for grantees to meet the new schedule for submission and completion of FY 2000 SSBG and LIHEAP applications, which will be due on September 1 (or June 1 for some SSBG applications) of each year. Accordingly, §§ 96.10(c) (1) and (2) and 96.10(d) of this rule, relating to the submission deadlines for SSBG applications and the submission and completion deadlines for LIHEAP applications, will become effective on March 1, 2000, and will apply beginning with FY 2001 plans for SSBG and LIHEAP. Under these provisions, for example, SSBG applications for FY 2001 must be submitted by September 1, 2000 for States that operate their programs on a federal fiscal year basis, and by June 1, 2000 for States that operate on a July 1–June 30 program year basis. LIHEAP applications for FY 2001 must be submitted by September 1, 2000 and must be completed by December 15, 2000.

Section 96.15 Waivers

The LIHEAP statute provides that grantees may request waivers of the limit on the amount of funds that may be spent on weatherization activities and other energy-related home repairs and of certain crisis assistance performance standards.

The LIHEAP statute provides that, in general, not more than 15 percent of funds allotted to or available to a grantee for any fiscal year may be used for weatherization activities and other energy-related home repairs. Section 705 of Public Law 101–501 (42 U.S.C. 8624(k)) amended section 2605(k) of the LIHEAP statute to allow the Department, under certain circumstances, to grant a waiver to increase the maximum amount of LIHEAP funds a grantee may use for low cost weatherization or other energy-related home repairs from 15 percent to up to 25 percent of the funds allotted or available to the grantee.

Section 2604(c) of the LIHEAP statute provides that a ''reasonable amount'' of LIHEAP funds (based on data from prior years) shall be reserved until March 15 of each year by each grantee for energy crisis intervention. This section describes performance standards for time frames for the provision of assistance, in addition to performance standards for geographical accessibility and obtaining applications from individuals who are physically infirm. However, the statute provides for a waiver of the performance standards for a program in a geographical area affected by a natural disaster designated by the Secretary or affected by a major disaster or emergency designated by the President for as long as the designation remains in effect, when the emergency makes compliance with the standards impracticable. Detailed criteria for a waiver of the crisis assistance performance standards are described in 45 CFR, part 96, § 96.89.

Currently, no mention is made in § 96.15 of the regulations to indicate to whom applications for waivers that are permitted by statute should be submitted for the LIHEAP program. Current regulation requires that waivers under the CSBG program are to be submitted to the Director, Office of Community Services. It was proposed in the NPRM dated November 16, 1993 (58 FR 60498) that waiver applications for SSBG (formerly submitted to the defunct Office of Human Development Services) and for LIHEAP should also be submitted to the Director, Office of Community Services. This section also currently specifies that applications for waivers for block grants administered by agencies of the PHS should be submitted to the Assistant Secretary of Health. With the reorganization of the Office of the Assistant Secretary for Health in 1995, this responsibility was delegated to the cognizant Agencies of the PHS. Accordingly, this section has been revised to specify that waiver requests should be submitted to the Director of the Centers for Disease Control and Prevention for PHS, to the Administrator of the Substance Abuse and Mental Health Services Administration for CMHS and SAPT, and to the Director of the Maternal and Child Health Bureau for MCH. The new titles of the CMHS and SAPT block grants are also reflected in this section.

No comments were received in response to § 96.15 of the NPRM. Therefore, this rule is adopted as proposed, with the changes discussed above for the titles and waiver approving authorities for the block grants administered by agencies of the PHS.

Subpart C—Financial Management

Section 96.30 Fiscal and Administrative Requirements

The NPRM issued by the Department dated July 17, 1992 proposed to add a new paragraph that would require block grant recipients to submit information on the obligation and expenditure status of each block grant allocation. For block grants whose statutory authorizations include time limits on both obligation and expenditure of funds, this information would include: (1) The dollar amount of the funds obligated by the grantee and the date of the last obligation; and (2) the dollar amount of the funds expended by the grantee and the date of the last expenditure.

For block grant statutes which have time limits on the obligation of funds but not on the expenditure of funds, this information would include the dollar amount of the funds obligated during the period funds were available for obligation and the date of the last obligation.

For block grant statutes which have time limits only on the expenditure of funds, this information would include the dollar amount of the funds expended and the date of the last expenditure.

The information would be required for each block grant award allocation after the close of the statutory period(s) for obligation of funds and/or expenditure of funds.

As proposed in the NPRM, grantees would be required to answer an inquiry issued to the grantee by the Department's Office of Payment Management Systems. This letter would be sent at the end of the statutory period for obligation or expenditure of funds. Grantees would have 90 days after the end of the applicable statutory period (or 90 days after receipt of the letter, whichever is the later date) to return the letter with the required information.

This information would allow HHS and the grantee to verify the financial status of block grant funds and allow the Department to determine aggregate obligations, expenditures, and available balances. The reporting requirement would not affect a grantee's right to subsequent reimbursement or to draw down funds for authorized obligations or expenditures made within the allowable statutory periods.

Comments: Three commenters wrote in response to this section of the NPRM. One commenter indicated that, although submission of a letter to the Department at the end of the year on the expenditure of CSBG funds would not be a significant burden, it seemed to be a duplication of information which the States provide in the expenditure reports submitted at the end of the year. The commenter continued by stating that it would have no adverse impact for this report to be submitted concerning LIHEAP expenditures.

The second commenter wrote that the imposition of new reporting requirements is contrary to the original intent of the block grant legislation that sought to minimize Federal administrative requirements by placing greater reliance on State government. The writer stated that the current block grant reporting requirements are adequate and should not be changed.

The final commenter asserted that the CSBG Act is administered exclusively by subgrantees, and the proposed section does not make it clear what requirements would be placed on subgrantees to report to a State in order for the State to be able to file the information the new section will require. The commenter stated the hope that any requirements placed on subgrantees to provide information to the State would conform to the system HHS now imposes on its direct grantees to file various financial reports.

Response: Currently, the Department does not require obligation or expenditure reports for the block grants (although some grantees submit them voluntarily.) This has caused problems in the past because there is no clear-cut information as to when a grantee has completely used its grant funds, thus allowing the Department to close the grant account. Public Law 101–510 (signed into law on November 5, 1990) amended 31 U.S.C. Chapter 15 to provide that, by the end of the fifth fiscal year after the fiscal year in which the Federal government obligated the funds, the account will be canceled. If valid charges to a canceled account are presented after cancellation, they may be honored only by charging them to a current appropriation account, not to exceed an amount equal to 1 percent of the total appropriations of that account.

Because of our need to determine the status of grant accounts, we have determined that it is appropriate to require an annual report on obligations and/or expenditures from all grantees under the block grant programs. We do not believe this requirement would be a significant burden on block grant recipients, as they are already required to maintain this information under current requirements of section 96.30. This section of the block grant regulations currently states that recipients are to maintain information sufficient to: ''* * * (b) permit the tracing of funds to a level of expenditure adequate to establish that such funds have not been used in violation of the restrictions and prohibitions of the statute authorizing the block grant.'' Furthermore, the Department now periodically sends grantees letters indicating the status of their block grant funds and asks grantees to confirm this information. However, since the publication of the July 17, 1992 NPRM, the Department considered designating the use of OMB Standard Form 269A, Financial Status Report (short form), to collect this information because it would be less burdensome on the grantees and the Department. The first comment reinforced this thought. By using Form 269A, grantees would be submitting the information on a familiar form and in a familiar format.

At least 90% of the CSBG funds are administered by subgrantees. It continues to be the policy of the Department to defer to the State for the type and frequency of reporting requirements a State mandates of subgrantees, so long as the reporting requirements are reasonable and provide the necessary information the State needs to comply with Federal regulations.

The Amendments enacted in 1998 (section 678D of Pub. L. 105–285) mandate that for CSBG grantees, ''a State shall ensure that cost and accounting standards of the Office of Management and Budget (OMB) apply to a recipient of funds under this subtitle.'' These standards are reflected in OMB Circulars A–110 and A–122.

Therefore, § 96.30 is adopted, with several changes from the version proposed in the NPRM, in order to make the requirement more consistent with other programs and thus reduce the burden on grantees. Rather than have a letter of inquiry sent to grantees at the end of the applicable statutory grant period, the final rule establishes a requirement that grantees submit, within 90 days of the end of the grant period, OMB Standard Form 269A, Financial Status Report (short form). This will allow grantees to submit the required information without a need to wait for a request from the Department, using a form with which they are familiar because it is used for most other Departmental grant programs. In addition, we have made modifications to change the term ''recipient'' to ''grantee''. These are technical changes to use a more accurate term, since ''recipients'' are often considered to be individual beneficiaries.

Subpart D—Direct Funding of Indian Tribes and Tribal Organizations

Section 96.41 General Determination

Each of the block grant statutes provides direct funding for States and territories. Statutes for four block grants—LIHEAP, CSBG, PHHS, and SAPT—authorize the Secretary to fund certain Indian tribes and tribal organizations directly if the Secretary determines that tribal members would be better served by the tribe than by the State(s) in which the tribe is located. In the case of SAPT, this authority is limited by statute to tribes that were funded in FY 1991 under the Alcohol and Drug Abuse and Mental Health Services Block Grant, the predecessor to SAPT and CMHS. Under this statutory provision, only one tribe qualifies for direct funding under SAPT. By law, Indian tribes may not apply for direct funding under MCH, CMHS, or SSBG.

Section 96.41(a) provides that the Department will award block grant funds directly to an eligible Indian tribe or tribal organization upon receipt of a complete application for funds that meets the statutory requirements. The preamble to the original block grant final rule dated July 6, 1982 (47 FR 29480) states the Department's policy on direct funding of Indian tribes as follows: ''By regulation, the Secretary has determined that members of Indian tribes and tribal organizations would be better served by direct Federal funding than by funding through the States in every instance that the Indian tribe or tribal organization requests direct funding.''

This language reflects our view that, as a general rule, tribal rather than State priorities and program administration will result in better service to tribal members. The final rule published in July 1982 established the primacy of the Indian tribe in determining the services to be provided and how best to provide them. It avoided the need for a Departmental assessment of the relative efficiency and effectiveness of alternative services systems, lodged primary responsibility with the tribe for administering the programs, and established the tribe's accountability for providing appropriate services to its service population.

The NPRM dated July 17, 1992 (57 FR 31682) proposed to add a paragraph (c) to the existing rule to clarify that under limited circumstances, the Secretary may use his or her discretionary authority to determine that the members

of a particular Indian tribe eligible for block grant funds would be better served by the State in which the tribe is located. The proposed amendment included in the NPRM would clarify the block grant regulations and apply only to the circumstances specified in paragraph (c):

(1) The Department has determined that the tribe has not used its block grant funds substantially in accordance with the block grant statute; and

(2) The Department has withheld block grant funds from the tribe based on that determination and in accordance with procedures established by the block grant regulations; and

(3) The tribe has not provided sufficient evidence that it has taken action to correct the problems leading to the withholding of funds.

The Secretary's determination to award funds to the State rather than directly to the tribe would be limited to the situation described above. If a tribe is located in more than one State, funds that had been set aside for a direct grant to the tribe would be awarded to these States in the same proportion as they were offset from the States' allotments for direct award to the tribe. When the Department withholds block grant funds from a tribe, the Department would make the determination to award funds to the State only after allowing as much time as it determines to be reasonable for the tribe to correct the conditions that led to withholding, consistent with provision of timely and meaningful services to the tribe's service population during the fiscal year. For example, if LIHEAP funds were withheld from a tribe effective October 1, the first day of the Federal fiscal year, but funds were not yet available to the Department for distribution to grantees, the Department probably would allow additional time for the tribe to correct these conditions. However, if LIHEAP funds were withheld later in the fiscal year, for example, effective as late as December 1, during the winter heating season, and funds were then available to the Department for distribution to grantees, the Department probably would make the determination to award funds to the State at the same time that it took the official withholding action, in order to ensure that tribal members received needed services during the winter months.

To assure that well-planned, uninterrupted, and timely services are provided to the service population of a tribe from which funds are withheld, the proposed amendment provided that the State would receive all remaining funds reserved for the tribe for that fiscal year and all funds for subsequent fiscal years until the Secretary determines that the tribe has corrected the problems which resulted in the withholding. Where funds have been withheld and the tribe has not taken satisfactory corrective action by the first day of the following fiscal year, all of the funds to serve the tribe's service population for the following fiscal year would be awarded to the State. The State would then be responsible for serving the tribe's service population.

If the tribe takes satisfactory corrective action during the following fiscal year, the tribe may receive direct funding for that fiscal year with the concurrence of the State. This is consistent with 45 CFR 96.42(e), which provides for acceptance of a tribal application submitted after September 1 only with the concurrence of the State(s) in which the tribe is located. For example, if the State had provided LIHEAP services for a fiscal year to the tribe's service population before the tribe took corrective action, the State would be unlikely to concur in the acceptance of an application from the tribe for that fiscal year.

The July 17, 1992 NPRM (57 FR 31682) was intended to clarify the responsibility for serving these tribal households and assure that services would be provided in a timely manner. The NPRM was intended to provide clear, published notice so that all parties concerned—including the tribe or tribal organization, the tribe's service population and the State—would understand the actions that the Department would take and understand the State's responsibility to serve the tribal service population while funds are withheld from the tribe or tribal organization.

The preamble to the original block grant final rule affirms the Department's commitment to continue the government-to-government relationship between the United States and Indian tribes and affirms the policy of self-determination for tribes. The Department continues to be committed to these policies; it is neither the intent nor the effect of the clarification in this final rule to change them.

The Department will withhold block grant funds from a grantee only after determining, in accordance with the due process procedures specified in the block grant statutes and regulations, that the grantee is not using its block grant funds substantially in accordance with statutory requirements to which the grantee has agreed. In such a case, the grantee has violated its agreement to abide by the terms and conditions of the grant, and the Department must act, in accordance with the law, to assure accountability for public funds.

The NPRM dated July 17, 1992 (57 FR 31682) also proposed to amend paragraph (a) to clarify that paragraph (c) constitutes a limited exception to the principle of direct funding of Indian tribes and tribal organizations. The proposed rule would apply when funds are withheld from a tribal organization, as well as from a tribe. (A tribe that was to be served by a separate tribal organization from which funds are withheld may rescind its resolution authorizing that role for the tribal organization and, consistent with statutory and regulatory requirements including § 96.42(e), may request direct funding for itself—on its own—or through another tribal organization. Because the tribal organization would be the grantee from which funds are withheld, a tribe separate from the tribal organization would be eligible for its own funding).

We anticipate there would be very few instances in which the exception to the Department's policy on direct tribal funding would apply. Over the past 15 or 16 years of HHS administration of the block grants with direct tribal funding—with over 100 tribes and tribal organizations receiving direct funding each year—there has been only one instance in which the Department has withheld block grant funds from a tribe. The NPRM was consistent with the actions previously taken by the Department.

Comments: Two comments were received in response to § 96.41 of the NPRM. One commenter (a tribe) stated that the proposed rule would impact tribal self-determination and begin to close the existing policy that in most Federal programs, tribes are treated as equals with the States.

Response: We believe that the rule would reaffirm HHS policy to directly fund tribes whenever it is authorized by a block grant statute, so long as the tribes submit the applications required by the statute and administer the block grant funds substantially in accordance with the statute. The Department's intent of the new language is to provide a means of continuing services to tribal populations if tribal management of block grant funds is found to be substantially out of compliance with statutory requirements to which the tribe agreed when it applied for and accepted Federal funds, and the tribe does not take corrective action during the period of a grant. In essence, we are seeking a way to continue services uninterrupted when we have no viable tribal alternative available. This has happened only once in the history of the

block grants, and we do not anticipate that this procedure would be used in the future until all reasonable efforts at assisting a tribe or tribal organization to come into compliance would be exhausted.

Comment: The second commenter (a State) objected to having the State be the alternative for providing services when funds are withheld from a tribe located within that State; the commenter mistakenly believed that the State would not have access to the withheld funds. The commenter proposed that HHS assume the responsibility to serve such a tribe.

Response: HHS has neither the authority nor the capacity to provide direct block grant services; the State does. Also, the proposed rule and its preamble specified that the State would receive any funds withheld from a tribe, if the tribe did not correct the problems that led to withholding within a reasonable period, so that the State could then serve the tribe's service population until the tribe corrected these problems. The State would serve this tribe's service population as it serves its other residents, including the service populations of tribes within the State that do not apply for direct Federal funding. There is no requirement that the State provide more specialized treatment or accessibility to members of this tribe than it does to its other residents.

Therefore, the rule is adopted as proposed, with a technical modification to change the term ''Secretary'' to ''Department''.

Section 96.42 General Procedures and Requirements

Paragraph (f) of subpart D, § 96.42 of the block grant regulations, provides that a State receiving block grant funds is not required to use those funds to provide tangible benefits (*e.g.*, cash or goods) to American Indians who are within the service population of an Indian tribe or tribal organization that received direct funding from the Department under the same block grant program for the same fiscal year. A State, however, may not deny tribal members access to intangible services funded by block grant programs (*e.g.*, treatment at a community health center) even if they are members of an organization receiving direct funding for a similar service.

The original preamble to the regulations (July 6, 1982, 47 FR 29482) provides the following clarification of this provision:

''Thus, for example, States are not required to provide cash payments or weatherization assistance to Indians included in the service population of a tribe receiving funds under the low-income home energy assistance program.''

The proposed amendment in the July 17, 1992 NPRM clarified that tribes receiving direct block grant funding are not required to use those funds to provide tangible benefits to non-Indians residing within the tribe's service area, unless a written tribe-State agreement so provides. In the case of tangible benefits such as those provided under the LIHEAP block grant, where the service unit is the household, the clarification would apply to non-Indian households.

The justification for this policy is clear. The LIHEAP statute authorizes the direct funding of Indian tribes for the provision of benefits to Indian households. The statute specifies that a tribe with a reservation is eligible to receive LIHEAP funds based on the number of Indian households eligible for the program and residing on the tribe's reservation or adjacent trust land, as a proportion of the eligible households in the State, or a larger amount based on an agreement between the tribe and its State. The tribe's allotment is to be offset from the allotment of the State. Unless a tribe-State agreement provides otherwise, the tribe's LIHEAP allotment is not based on the total eligible population of its reservation and nearby trust land. The tribe does not receive LIHEAP funds to serve non-Indian households residing in these areas. This is the responsibility of the State. Similarly, the statute provides that a tribe without a reservation is to receive LIHEAP funds based on the number of Indian households eligible for the program in its service population area, as determined by the Secretary in consultation with the tribe and its State.

Thus, unless a tribe-State agreement provides otherwise, tribes receive LIHEAP funds based only on the number of eligible Indian households in their service areas.

This amendment, therefore, would clarify that States have the responsibility to serve the non-Indian households residing in the service area of a direct grant tribe, unless the tribe and the State agree that the tribe will do so.

No comments were received in response to § 96.42 (f) as proposed in the NPRM. Therefore, the rule is adopted as proposed.

Section 96.49 Due Date for Receipt of All Information Required for Completion of Tribal Applications for the Low-Income Home Energy Assistance Block Grants

Section 96.49 was proposed to be added to the block grant regulations by the NPRM issued by the Department on July 17, 1992 (57 FR 31685). It proposed to establish completion dates for tribal applications for CSBG and for LIHEAP. Because significant changes to the CSBG statute have been enacted since the publication of the NPRM, we are dropping the provision establishing completion dates for tribal applications for CSBG.

LIHEAP: Section 96.49 of the NPRM dated July 17, 1992 proposed that once the LIHEAP tribal applications are received by the Department, additional information needed to complete the applications must be received no later than January 31 for a given fiscal year. The July 17, 1992 proposed rule also indicated that after January 31, funds would revert to the State(s) in which the tribe is located. This provision was also included in the November 16, 1993 NPRM (58 FR 60498) in an amended version. The later NPRM included a due date for completion of tribal applications of October 1, once forward funding went into effect.

Comments: In response to this part of § 96.49 of the July 17, 1992 NPRM, three comments were received. A commenter from a northern State indicated that the deadline should provide States with sufficient notice in case they need to provide LIHEAP assistance to the service population of a tribe that has not completed its application for a direct grant. Additionally, the commenter stated that the State's extremely cold weather necessitates that winter heating assistance begin by November 1. Thus, it felt that the January 31 deadline was too late, and suggested October 15 instead.

One commenter indicated that the requirement that tribal applications be completed by January 31 or the State becomes responsible to serve the tribe would result in funds being allocated to the State after February. The commenter was concerned that, in addition to the financial impact on the State, the State would not have sufficient lead time to plan, staff and implement its program to serve the tribe.

Another commenter indicated that the current regulatory due date of September 1 for submission of a tribal application for both CSBG and LIHEAP is satisfactory. The commenter was uncertain whether the due date for completion of the tribal applications is

necessary. The commenter also expressed the need to receive LIHEAP funding as early in the fiscal year as possible.

No comments were received in response to the LIHEAP completion date proposed in § 96.49 of the November 16, 1993 NPRM related to forward funding. As mentioned earlier, the proposed dates related to forward funding are being deleted because forward funding will not be implemented. However, that NPRM proposed a completion date five months after the submission date.

Response: The Department concludes, upon further review, that such a lengthy period for completion of the applications should not be needed. Because most LIHEAP funds are spent for winter heating assistance, it would be preferable that States know by early winter at the latest whether they will be required to serve a tribe's service population. It should be mentioned that most tribes submit all the information necessary to complete their applications in a timely manner. However, in a few cases, tribes take many months to complete their applications, or never complete their applications, despite repeated communication from HHS about missing items.

Under this final rule, the due date for receipt of all information necessary to complete LIHEAP tribal applications is December 15 unless the State(s) in which the tribe is located agrees to a later completion date. This is the same date set for completion of applications from States and territories. We believe it balances the need to give tribes a reasonable amount of time to provide all necessary information to complete their applications with the need of the States to know as early as possible whether they will be responsible for serving tribal members. We have also made explicit that when funds revert to the State because a tribe's application is not completed by the deadline, the State is responsible for serving that tribe's members.

Effective Date: Given the timing of publication of this final rule, there will not be time for tribal grantees to meet the new schedule for completion of FY 2000 applications for LIHEAP. Accordingly, § 96.49 of this rule, which applies to LIHEAP applications, will become effective on March 1, 2000 and will apply beginning with FY 2001 plans. For example, for FY 2001, LIHEAP tribal applications must be submitted by September 1, 2000 and must be completed by December 15, 2000.

Subpart E—Enforcement

Section 96.53 Length of Withholding

Six of the seven block grant statutes provide for withholding of funds from grantees under certain circumstances. (SSBG has no provision for withholding of funds.)

The statutes for PHHS, CMHS, and SAPT provide that the Secretary shall, after adequate notice and an opportunity for a hearing conducted within the affected State, withhold funds from any State which does not use its allotment in accordance with the requirements of the statute or the certification provided under the statute. The Secretary shall withhold such funds until the Secretary finds that the reason for the withholding has been removed and there is reasonable assurance that it will not recur.

The statute for MCH provides that the Secretary may, after notice and opportunity for a hearing, withhold payment of funds to any State which is not using its allotment under this title in accordance with this title. The Secretary may withhold such funds until the Secretary finds that the reason for the withholding has been removed and there is reasonable assurance that it will not recur.

The LIHEAP and CSBG statutes provide that the Secretary shall, after adequate notice and an opportunity for a hearing conducted within the affected State, withhold funds from any State which does not utilize its allotment substantially in accordance with the provisions of this statute and the assurances such State provided under the statute.

Section 96.53 was proposed in the NPRM issued by the Department on July 17, 1992 (57 FR 31685). It clarifies that under LIHEAP and CSBG, the Secretary may withhold funds until the Secretary finds that the reason for withholding has been removed, as is the case with the other block grants which provide for the withholding of funds. It proposed making explicit authority which is implicit in the LIHEAP and CSBG statutes. The proposed new language is similar to that of the other four statutes which provide for withholding of funds.

Comment: In response to § 96.53 in the NPRM dated July 17, 1992, one comment was received. The commenter indicated agreement with the proposed language, both because it is very similar to language in several other block grant statutes and because it provides a time frame for when the funds would be released once they have been withheld.

Response: The Department concludes that for the sake of thoroughness and consistency with the other block grants, the proposed language is needed to clarify for grantees authority which is implicit in the LIHEAP and CSBG statutes. Therefore, the language proposed for § 96.53 is included in this final rule.

Subpart H—Low-Income Home Energy Assistance Program (LIHEAP)

Section 96.81 Carryover and Reallotment

Section 2607(b)(2) of the LIHEAP statute provides that grantees may hold available (carry forward or carry over) for use or obligation in the following fiscal year up to 10 percent of the amount payable to them in a fiscal year and not transferred to another HHS block grant. Section 2607(b)(l) provides for reallotment among all grantees in the following fiscal year of any amounts unused (unobligated) as of the end of a fiscal year that exceed the amount that may be held available for use in the following fiscal year. Section 2604(f)(2) of the LIHEAP statute, as amended by Public Law 101–501, provides that, beginning in FY 1994, grantees may no longer transfer LIHEAP funds to other HHS block grants.

—Required Carryover and Reallotment Report

As part of the reallotment procedure established by section 2607(b), LIHEAP grantees must report information annually on funds they plan to hold available for obligation in the following fiscal year and on excess unobligated funds available for reallotment among all grantees in the following fiscal year. Section 96.81 of the block grant regulations lists the requirements for these reports.

The January 16, 1992 (57 FR 1960) interim final rule amended § 96.81 to reflect the change made by Public Law 101–501 reducing the maximum amount of LIHEAP funds that grantees may carry forward for obligation in the succeeding fiscal year, from 15 percent to 10 percent of the funds payable to the grantee and not transferred, pursuant to section 2604(f) of the LIHEAP statute (as in effect prior to 1998), to another HHS block grant. The change was effective beginning with FY 1991 funds carried over to FY 1992. The amended § 96.81 required that, as part of their annual carryover and reallotment reports, grantees indicate the amount of LIHEAP funds they want to hold available for obligation in the next fiscal year, ''not to exceed 10 percent of the funds payable to the grantee and not transferred * * *''

The November 16, 1993 (58 FR 60498) NPRM proposed to specify in § 96.81

that, beginning with funds appropriated for FY 1994, grantees would not be able to transfer any LIHEAP funds to another block grant, consistent with changes to the LIHEAP statute made by Public Law 101–501. We received no comments on this proposed amendment.

Because the transfer authority has now expired, this final rule deletes reference to it in the list of requirements for grantees' future carryover and reallotment reports in § 96.81. It codifies the requirements for these reports at § 96.81(b).

Title III of the Human Services Amendments of 1994, Public Law 103–252, reauthorized LIHEAP and provided that the Department may not release block grant funds to a grantee until its carryover and reallotment report, which is due by August 1 of each year, has been submitted for the previous year. This requirement was effective beginning with fiscal year 1995 and has been added to this section.

—Conditions for Reallotment

In addition, we are making final a change relating to reallotment of LIHEAP funds that we proposed in the July 17, 1992 (57 FR 31682) NPRM.

The preamble to the NPRM noted that when grantees have had excess unobligated funds available for reallotment, these amounts have usually been small. For example, in FY 1987, a total of $16,706 in unobligated FY 1986 LIHEAP funds were available for reallotment; in FY 1988, $2,858 in unobligated FY 1987 funds were available for reallotment; and in FY 1994, a total of $23,591 in unobligated FY 1993 funds were available for reallotment. If HHS had reallotted these funds, many grantees would have received grant awards of less than $1, and many others would have received awards of less than $25. We therefore determined that it would not be cost effective for HHS to award these small amounts to grantees, or for grantees to account for and use them. HHS then published notices in the **Federal Register** announcing its decision that no LIHEAP funds from FY 1986, FY 1987, or FY 1993 would be reallotted.

Because similar situations are likely to occur in the future, the NPRM proposed to amend § 96.81 of the block grant regulations to state that HHS will not reallot LIHEAP funds if less than $25,000 is available. If $25,000 or more is available, HHS would reallot these funds. However, HHS would not award less than $25 in reallotted funds to a grantee. If $25,000 were available for reallotment, all States would receive at least $25.

The NPRM's preamble proposed that if a tribe's share of reallotted funds would be less than $25, the tribe's share would be awarded to the State(s) in which the tribe is located. If a territory's share of reallotted funds would be less than $25, the territory's share would be distributed proportionately among the other territorial grantees receiving shares of $25 or more.

We received one comment supporting this proposed amendment and none opposing it.

We are adopting this change at section 96.81(c), as proposed in the July 17, 1992 NPRM. If a tribe, tribal organization, or territory's share of reallotted funds would be less than $25, HHS will follow the procedures for such circumstances that are described above.

—Technical Amendments

We also are clarifying that § 96.81 applies to regular LIHEAP block grant funds and not to LIHEAP leveraging incentive funds. (Section 96.87(k) of the regulations as established by the final rule of May 1, 1995, sets the period of obligation for leveraging incentive funds. Leveraging incentive funds are not subject to reallotment; all leveraging incentive funds not obligated during the appropriate period allowed for obligation must be returned to the Federal government.)

Finally, in minor technical amendments, we are dividing § 96.81 into paragraphs ''(a) Scope'', ''(b) Required carryover and reallotment report'', and ''(c) Conditions for reallotment'', as proposed in the July 1992 NPRM. Also, we are changing the heading of the section from ''Reallotment report'' to ''Carryover and reallotment'', and making several other minor technical changes, to accurately reflect the contents of the LIHEAP statute and this section.

Section 96.82 Required Report on Households Assisted

The title of § 96.82 was proposed to be revised in the November 16, 1993 NPRM (58 FR 60498) from ''Required report'' to ''Required report on households assisted'' to reflect the contents of the report. In addition, the NPRM included provisions related to the implementation of forward funding, and proposed changing the term ''handicapped'' to ''disabled''. No comments were received in response to this section of the NPRM.

Subsequently, however, the Human Services Amendments of 1994 (Pub. L. 103–252) amended section 2605(c)(1)(G) of the LIHEAP statute to provide that, beginning with fiscal year 1995, additional data must be reported by grantees concerning the households applying for assistance, as well as those households receiving assistance under the LIHEAP program. Pub. L. 103–252 also required that the data for the prior year must be submitted as part of the application for grant funds. Accordingly, grant awards for the current fiscal year may not be made until the data for the prior year is received.

The Office of Management and Budget has approved the collection of the new data requirements (LIHEAP Household Report—OMB Control No. 0970–0060, expiration date 6/30/2000), beginning with data for FY 1998, which must be submitted as part of the application for FY 1999 LIHEAP funds. As required by the statute and approved by OMB, the data that must be reported for each type of LIHEAP assistance provided by the grantee is (1) the number and income levels of those households applying for assistance and of those households receiving assistance; and (2) for those households receiving assistance, the number of households that contain one or more members who are elderly, disabled, or a young child. In addition, OMB approved the collection of data on a voluntary basis on the breakout of young children into two age categories, as recommended in the legislative history for the law. As part of the OMB clearance, insular areas that receive regular LIHEAP block grant allocations of less than $200,000 annually and Indian tribes and tribal organizations that receive direct funding from HHS need to submit only data on the number of households assisted for each type of LIHEAP assistance provided by the grantee. The OMB approval included a recommended format that grantees may (but are not required) to use to report the data.

Consistent with the amendments to the LIHEAP statute, the OMB information collection approval provides that a grant award will not be made until the LIHEAP Household Report for the previous fiscal year is received.

We are adopting this section of the regulation, with several changes to reflect the change in statutory requirements and the OMB information collection approval. We have revised this section to require grantees to submit a report on data required by the LIHEAP statute, as approved by OMB for information collection under the Paperwork Reduction Act of 1995. Rather than specify the information required, we have referenced the information required by the statute, so that the regulations will not need to be changed if this part of the statute is

amended again. We have also included the reduced amount of information required from insular areas with annual block allotments of less than $200,000 and from tribal grantees under the OMB approval. The proposed date changes which were related to forward funding are being deleted since forward funding will not be implemented. A technical change is being made to change the word ''handicapped'' to the word ''disabled'' in this section. The title of the section is being changed to ''Required LIHEAP household report'', to more accurately reflect its content under the current statutory requirements.

Because the provisions in § 96.82 that are included in this notice were not previously included in a notice of proposed rulemaking, we are issuing this part of the regulation as an interim final rule, with an opportunity for comment. This means that this portion of the regulation is effective November 15, 1999, after publication of this notice in the **Federal Register**, but that we are interested in receiving comments on the interim final provisions. We will review any comments which we receive by December 14, 1999. We will revise the rule, as appropriate, based on the comments we receive and on our experience in implementing the provisions.

Section 96.84 Miscellaneous

End of Transfer Authority. At the time of publication of the NPRM dated November 16, 1993 (58 FR 60498), grantees were no longer allowed to transfer up to 10 per cent of LIHEAP funds payable in a fiscal year to other HHS block grant programs. The 1990 amendments to the statute provided that, beginning in fiscal year 1994, no LIHEAP funds payable to a grantee may be transferred to other block grant programs. Accordingly, the NPRM proposed to amend the block grant regulations to specify that after September 30, 1993, grantees no longer may transfer any of their LIHEAP funds to the block grant programs specified in section 2604(f) of the statute.

The FY 1993 HHS appropriations law (Pub. L. 102–394) provided advance funding for LIHEAP for the first nine months of FY 1994, and allowed $141,950,240 of those funds to be used by grantees to reimburse themselves for expenses incurred in FY 1993. Because they were appropriated as advance funding for FY 1994, any such funds used by grantees to reimburse themselves for FY 1993 expenses could not be considered funds payable to grantees in FY 1993 and thus could not have been used to calculate the maximum amount that could have been transferred in FY 1993.

The authority for territories to consolidate funding for several programs under one or more HHS programs is not considered a transfer and thus did not terminate in FY 1994. Likewise, LIHEAP funds earmarked by grantees for use for LIHEAP weatherization assistance or other energy-related home repair, even if administered by another grantee agency, are not considered to be transferred, and this authority did not terminate in FY 1994.

No comments were received in response to § 96.84 of the NPRM. Therefore, the rule is adopted as proposed.

Section 96.85 Income Eligibility

The statute sets maximum and minimum income eligibility standards for participation in the LIHEAP program that are tied to poverty income guidelines and to State median income estimates as determined by the Bureau of Census. The date for adoption of the current poverty income guidelines is any time between the date of their publication in the **Federal Register** and the beginning of the next fiscal year. The date for adoption of the State median income estimates has been the first day of the fiscal year after their publication, but that date had not been reflected in the block grant regulations. The NPRM dated November 16, 1993 (58 FR 60498) proposed that the block grant regulations be amended to incorporate an adoption date for the State median income estimates that is consistent with the adoption date for the poverty income guidelines and to amend that adoption date to reflect the shift to forward funding, although the law subsequently deleted the concept of forward funding. The poverty income guidelines and the State median income estimates are published annually in the **Federal Register**, generally in the month of February or March. Therefore, with the amendment of this section, grantees could adopt the annual poverty income guidelines and the annual State median income estimates at any time between the date of publication in the **Federal Register** and the first day of the next fiscal year, October 1, or the beginning of the State fiscal year, whichever is later. Grantees could also choose to implement the changes during the period between the heating and cooling seasons.

No comments were received in response to § 96.85 of the NPRM. Therefore, the rule is adopted as proposed, except for deleting references to dates under forward funding.

Regulatory Procedures

Paperwork Reduction Act of 1995

Sections 96.10, 96.49, 96.81, and 96.82 contain information collections. As required by the Paperwork Reduction Act of 1995 (44 U.S.C. 3507 (d)), the Department submitted a copy of these sections to the Office of Management and Budget (OMB) for its review. The following data collection forms have been approved by OMB:

Section 96.10(a) (Maternal and Child Health Services Block Grant guidance and Forms for the Title V Application/ Annual Report, OMB clearance number 0915–0172, expiration date 11/99);

Section 96.10(c) (LIHEAP Model Plan, OMB Clearance Number 0970–0075, expiration date 12/31/2001);

Sections 96.49, LIHEAP Model Plan, OMB Clearance Number 0970–0075, expiration date 12/31/2001);

Section 96.81 (LIHEAP Carryover and Reallotment Report, OMB Clearance Number 0970–0106, expiration date 09/ 30/2001).

Section 96.82 (LIHEAP Report on Applicant and Recipient Households (OMB Control Number 0970–0060, expiration date 6/30/2000).

Title: Maternal and Child Health Services Block Grant guidance and Forms for the Title V Application/ Annual Report (OMB clearance number 0915–0172, expiration date 11/99).

Summary: The rule modifies § 96.10(a) to allow the Department to specify the form of a block application when this is required or clearly contemplated by the authorizing statute. It also states that the MCH application shall be in the format specified by the Secretary, as required by the MCH authorizing law. Previously, the rule stated that no particular form was required. This information will be used to obtain descriptions of grantee programs and to make grant awards.

Respondents: State and territorial grantees under the MCH block grant. The number of likely respondents is 59.

Burden information: The MCH application and annual report are required annually of each grantee. The application, annual report, and guidance are currently undergoing revision and renewal of the OMB clearance. The public reporting burden for the revised application and annual report is estimated to be approximately 495 hours for each State grantee and 200 hours for the District of Columbia and territories, for 4 out of every 5 years, for a total burden of 26,550 hours. In the 5th year, a needs assessment is also required. In that year, the estimated burden is 675 hours for each State grantee and 360 hours for the District of

Columbia and territories, for a total burden of 36,990 hours. The average annual burden over the next three years is 30,030 hours. This includes time for reviewing instructions, searching existing data sources, gathering and maintaining the data needed, and completing and reviewing the collection of information. The changes in this final rule are consistent with the notice of the request for OMB renewal of the information collection for the MCH application and annual report, published at 62 FR 17198. Furthermore, in the support of its commitment to new Federalism, the Department has made every effort to develop its application requirements and forms in close cooperation with the States, and where possible the communities. With respect to the MCH application and annual report, the Maternal and Child Health Bureau developed new guidance and an automated reporting system based on the emerging concept of ''Performance Partnerships.'' Not only did the Bureau meet regularly with a Block Grant Guidance Work Group made up largely of State and local MCH representatives, but the Bureau field tested the guidance and information system with 9 states and held a number of sessions at three separate national meetings with representatives of all State MCH and Children with Special Health Care Needs Directors, as well as many local directors. The initial national sessions focused on discussing and reviewing the proposed guidance and performance partnership measures. Later sessions included hands on training in using the guidance that was provided by the Bureau and the nine test States.

Title: LIHEAP Model Plan (OMB Clearance Number 0970–0075, expiration date 12/31/2001).

Summary: Section 96.10(c) establishes application submission and completion deadlines for annual applications for LIHEAP funds from States and territories. This will allow the Department to issue grant awards as close as possible to the beginning of a grant period and thus meet its obligations under the Cash Management improvement Act to minimize interest charges associated with that Act. Other than establishing due dates, this final rule does not affect the information collection.

Respondents: State, territorial, and tribal grantees under the LIHEAP block grant.

Burden information: The LIHEAP application is required annually of each grantee. We estimate the number of likely respondents to be 180. The public reporting burden is estimated to be 1 hour for each of the 60 grantees that submit a detailed plan (required of each grantee every three years) and 20 minutes for each of the 120 grantees that submit an abbreviated form, for an estimated total annual reporting and recordkeeping burden of 103 hours. This includes time for reviewing instructions, searching existing data sources, gathering and maintaining the data needed, and completing and reviewing the collection of information.

Title: LIHEAP Model Plan (OMB Clearance Number 0970–0075, expiration date 12/31/2001).

Summary: Section 96.49 establishes application completion deadlines for annual applications for LIHEAP funds from Indian tribes and tribal organizations. The current rule establishes an application submission deadline for tribal grantees. This change will allow the Department to advise States early in the heating season whether they will be responsible for serving members of a tribe's service population, or whether the tribe will do so. Other than establishing a completion date, this final rule does not affect the information collection.

Respondents: State, territorial, and tribal grantees under the LIHEAP block grant.

Burden information: The LIHEAP application is required annually of each grantee. We estimate the number of likely respondents to be 180. The public reporting burden is estimated to be 1 hour for each of the 60 grantees that submit a detailed plan (required of each grantee every three years) and 20 minutes for each of the 120 grantees that submit an abbreviated form, for an estimated total annual reporting and recordkeeping burden of 103 hours. This includes time for reviewing instructions, searching existing data sources, gathering and maintaining the data needed, and completing and reviewing the collection of information.

Title: LIHEAP Carryover and Reallotment Report (OMB Clearance Number 0970–0106, expiration date 09/30/2001).

Summary: Section 96.81 amends requirements relating to a required report on the amount of funds grantees wish to carry forward from the year in which they are appropriated to the following fiscal year (limited to 10% of funds payable to the grantee). The changes reflect amendments to the LIHEAP statute. The data are used to determine whether excess carryover funds will be available for reallotment to other grantees. Other than making the regulations consistent with statutory requirements, the changes do not affect the information collection.

Respondents: State, territorial, and tribal grantees under the LIHEAP block grant.

Burden information: The LIHEAP carryover and reallotment report is required annually of each grantee. We estimate the number of likely respondents to be 177. The public reporting burden is estimated to be 3 hours for each of the 177 grantees, for an estimated total annual reporting and recordkeeping burden of 531 hours. This includes time for reviewing instructions, searching existing data sources, gathering and maintaining the data needed, and completing and reviewing the collection of information.

Title: LIHEAP Report on Applicant and Recipient Households (OMB Control Number 0970–0060, expiration date 6/30/2000).

Summary: Section 96.82 amends requirements for a required report on LIHEAP households applying for and receiving assistance in the prior fiscal year, in order to make them consistent with statutory provisions enacted in 1994 (Pub. L. 103–252). The collection of the statutorily required data has been approved by OMB. Other than making the regulatory language consistent with the statute and the OMB approval, this final rule does not affect the information collection.

Respondents: State, territorial, and tribal grantees under the LIHEAP block grant.

Burden information: The report on households applying for and receiving LIHEAP assistance the previous fiscal year must be submitted as part of a grantee's LIHEAP application each fiscal year. We estimate the number of likely respondents to be 183. The public reporting burden is estimated to be 38 hours for each of the 52 grantees that must submit all required data (all States, the District of Columbia, and Puerto Rico). The reporting burden is estimated to be 1 hour for each of the 131 grantees that submit information only on the number of households assisted under each type of assistance offered by the grantee (applicable to Indian tribes and tribal organizations, and to those insular areas with annual allotments of less than $200,000). The estimated total annual reporting and recordkeeping burden is 2,107 hours. This includes time for reviewing instructions, searching existing data sources, gathering and maintaining the data needed, and completing and reviewing the collection of information.

Section 96.30 also contains information collection requirements. As required by the Paperwork Reduction Act of 1995 (44 U.S.C. 3507(d), the Department will submit a copy of this

section to the Office of Management and Budget (OMB) for its review.

Title: Financial Status Report, OMB Standard Form 269A.

Summary: Section 96.30 of this final rule establishes a new requirement that grantees under block grants covered by these regulations submit, within 90 days of the end of the grant period, OMB Standard Form 269A, Financial Status Report (short form), reporting the obligation and/or expenditure of block grant funds. Currently, the Department does not require obligation or expenditure reports for the block grants (although some grantees submit them voluntarily.) This has caused problems in the past because there is no clear-cut information as to when a grantee has completely used its grant funds, thus allowing the Department to close the grant account. This information would allow HHS and the grantee to verify the financial status of block grant funds and allow the Department to determine aggregate obligations, expenditures, and available balances.

Respondents: States, territories, and Indian tribes or tribal organizations that receive funds under the block grants subject to these regulations.

Burden Information: These obligation and expenditure reporting requirements will be required annually for all State, territorial, and tribal grantees under each of the block grant programs subject to these regulations. We estimate the number of likely respondents to be 620, based on the following number of grantees for each block grant: 180 for LIHEAP, 130 for CSBG, 57 for SSBG, 75 for PHHS, 59 for MCH, 59 for CMHS, and 60 for SAPT. The public reporting burden is estimated to be less than an hour each for a grantee, including time for reviewing instructions, searching existing data sources, gathering and maintaining the data needed, and completing and reviewing the collection of information, for an estimated total annual reporting and recordkeeping burden of 620 hours.

The Department of Health and Human Services will consider comments by the public on the proposed collection of information under § 96.30 in—

- Evaluating whether the proposed collections are necessary for the proper performance of the functions of the Department, including whether the information will have practical utility;
- Evaluating the accuracy of the Department's estimate of the burden of the proposed collections of information, including the validity of the methodology and assumptions used;
- Enhancing the quality, usefulness, and clarity of the information to be collected; and
- Minimizing the burden of the collection of information on those who are to respond, including through the use of appropriate automated, electronic, mechanical, or other technology, e.g., permitting electronic submission of responses.

To ensure that public comments have maximum effect in developing the final regulations, the Department urges that each comment clearly identify the specific section or sections of the regulations that the comment addresses and that comments be in the same order as the regulations.

Under the Paperwork Reduction Act of 1995, we are required to provide 60 day notice in the **Federal Register** and solicit public comment before a collection of information requirement is submitted to the Office of Management and budget (OMB) for review and approval. To comment on this information collection and record keeping requirement, please send comments to the following: Department of Health and Human Services, Office of Planning and Evaluation, Room 447D, 200 Independence Ave., SW, Washington, DC 20201, Attn: Michael Herrell.

After receipt and full consideration of comments, the Department will submit the information collection requirement to OMB for review and approval. The requirement will take effect upon OMB approval.

Regulatory Impact Analysis

Executive Order 12866 requires preparation of a regulatory impact analysis if the regulation will have an annual effect on the economy of $100 million or more or adversely affect in a material way the economy, a sector of the economy, productivity, competition, jobs, the environment, public health or safety, or State, local or tribal governments or communities. In this respect, the Department of Health and Human Services believes that this final regulation will not have an impact on the economy of $100 million or more or adversely affect in a material way any of the sectors listed above, including State, local or tribal governments.

Primarily this rule amends the regulation governing block grant programs to clarify a number of administrative processes that include submission and completion dates for applications, where to submit waiver requests, direct funding of Indian tribes and other organizations, and procedures for termination, reduction, suspension and partial withholding of funding. In the case of application submission and completion dates, we have provided substantial flexibility in response to public comments to accommodate the varying State cycles and believe setting these dates will have a positive impact in allowing the Department to issue awards to States in a timely manner. We also believe that our clarification of administrative processes for waiver requests, direct funding and related items provides only the minimum requirements and guidance needed and therefore will not impose a burden, especially since it is expected that these procedures will be needed only in rare circumstances.

The rule additionally codifies a number of statutory changes such as program name changes, statutory citations and fund transfer authorities. There is no burden associated with these changes.

Finally, the rule clarifies the authority of the Department to specify block grant reporting requirements where authorized by governing statutes and it requires some minimal financial reporting requirements to allow the Department to comply with legal requirements for fund management. Authority for establishing the content and format of reports required under block grants continues to be governed by the authorizing statutes and the clarification provided in this rule does not set substantive requirements. The Department will continue to solicit State input on the development of the format and content of required reports as it has done under the MCH program.

With respect to the financial reporting requirement, the Department believes the burden imposed is not significant. This information is already collected by the States and periodically submitted to the Department. This rule will provide a set process for submitting the information in the future, giving States a predictable routine to follow. The SF–269a is already used by States and is intended to further reduce the report burden on grantees. We have adopted the short form to acquire only the minimum information needed for our accounting purposes.

In accordance with the provisions of Executive Order 12866, this regulation was reviewed by the Office of Management and Budget.

Federalism

We have examined this rule under Executive Order 12612 on Federalism and do not believe that the rule violates the principles or policymaking criteria set forth by the Order. In several instances under the rule, we are establishing standard administrative procedures for actions such as application submission dates, direct funding of Indian tribes and tribal

organizations, termination of funds, and financial reporting. In establishing these procedures, the Department has tried to allow maximum flexibility to States in the way they can meet these requirements. For instance, the Department, in response to public comment, has revised the regulations to allow the Department to accommodate varying State and Tribal cycles in the submission of applications. We also note that a number of States have commented in support of various provisions of this rule. We will also continue to consult with States and Tribes in the development and modification of any standard reporting requirements and formats that are authorized by the governing program statutes.

Regulatory Flexibility Act

The Regulatory Flexibility Act (Pub. L. 96–354) requires the Federal government to anticipate and reduce the impact of regulations and paperwork requirements on small entities. The primary impact of this final rule is on State, tribal and territorial governments. Therefore, the Department of Health and Human Services certifies that these rules will not have a significant economic impact on a substantial number of small entities because they affect payments to States, tribes and territories. Thus, a regulatory flexibility analysis is not required.

Catalog of Federal Domestic Assistance Program Numbers

The Catalog of Federal Domestic Assistance Program Numbers for these programs are: 93.568 for the Low-Income Home Energy Assistance Program (LIHEAP); 93.569 for the Community Services Block Grant (CSBG); 93.667 for the Social Services Block Grant (SSBG), 93.991 for the Preventive Health and Health Services Block Grant (PHHS); 93.958 for the Community Mental Health Services Block Grant (CMHS); 93.959 for the Substance Abuse Prevention and Treatment Block Grant (SAPT); and 93.994 for the Maternal and Child Health Services Block Grant (MCH).

List of Subjects in 45 CFR Part 96

Child welfare, Community action program, Energy, Grant programs—energy, Grant programs—Indians, Grant programs—social programs, Health, Income assistance, Indians, Individuals with disabilities, Low and moderate income housing, Maternal and child health, Mental health programs, Public health, Reporting and record keeping requirements, Substance Abuse, Transfers, Weatherization.

Dated: November 10, 1998.

Donna E. Shalala,

Secretary, Department of Health and Human Services.

Note: This document was received in the Office of the Federal Register on October 8, 1999.

For the reasons set forth in the preamble, part 96 of title 45 of the Code of Federal Regulations is amended as follows:

PART 96—BLOCK GRANTS

1. The authority citation for part 96 continues to read as follows:

Authority: 42 U.S.C. 300w *et seq.*; 42 U.S.C. 300x *et seq.*; 42 U.S.C. 300y *et seq.*; 42 U.S.C. 701 *et seq.*; 42 U.S.C. 8621 *et seq.*; 42 U.S.C. 9901 *et seq.*; 42 U.S.C. 1397 *et seq.*; 31 U.S.C. 1243 note.

Subpart A—Introduction

2. Section 96.1 is amended by revising paragraphs (a), (c), (d), (e), and (f) to read as follows:

§ 96.1 Scope.

(a) Community services (Pub. L. 97–35, sections 671–683) (42 U.S.C. 9901–9912).

* * * * *

(c) Community mental health services (Public Health Service Act, sections 1911–1920 and sections 1941–1954) (42 U.S.C. 300x–1–300x–9 and 300x–51–300x–64).

(d) Substance abuse prevention and treatment (Public Health Service Act, sections 1921–1935 and sections 1941–1954) (42 U.S.C. 300x–21–300x–35 and 300x–51–300x–64).

(e) Maternal and child health services (Social Security Act, Title V) (42 U.S.C. 701–709).

(f) Social services, empowerment zones and enterprise communities (Pub. L. 97–35, sections 2351–55; Pub. L. 103–66, section 1371) (42 U.S.C. 1397–1397f).

* * * * *

3. Section 96.2 is amended by revising paragraph (d) to read as follows:

§ 96.2 Definitions.

* * * * *

(d) *State* includes the fifty States, the District of Columbia, and as appropriate with respect to each block grant, the Commonwealth of Puerto Rico, the U.S. Virgin Islands, Guam, American Samoa, the Commonwealth of the Northern Mariana Islands, and for purposes of the block grants administered by agencies of the Public Health Service, the Federated States of Micronesia, the Republic of the Marshall Islands, and the Republic of Palau.

Subpart B—General Procedures

3. Section 96.10 is amended by revising paragraph (a) and adding paragraphs (c) and (d) to read as follows:

§ 96.10 Prerequisites to obtain block grant funds.

(a) Except where prescribed elsewhere in this rule or in authorizing legislation, no particular form is required for a State's application or the related submission required by the statute. For the maternal and child health block grant, the application shall be in the form specified by the Secretary, as provided by section 505(a) of the Social Security Act (42 U.S.C. 705(a)).

(b) * * *

(c) Effective beginning in fiscal year 2001, submission dates for applications under the social service and low-income home energy assistance block grant programs are:

(1) for the social services block grant, States and territories which operate on a Federal fiscal year basis, and make requests for funding from the Department, must insure that their applications (pre-expenditure reports) for funding are submitted by September 1 of the preceding fiscal year unless the Department agrees to a later date. States and territories which operate their social services block grant on a July 1–June 30 basis, must insure that their applications are submitted by June 1 of the preceding funding period unless the Department agrees to a later date.

(2) for the low-income home energy assistance program, States and territories which make requests for funding from the Department must insure that their applications for a fiscal year are submitted by September 1 of the preceding fiscal year unless the Department agrees to a later date.

(d) Effective beginning in fiscal year 2001, for the low-income home energy assistance program, States and territories which make requests for funding from the Department must insure that all information necessary to complete their applications is received by December 15 of the fiscal year for which they are requesting funds unless the Department agrees to a later date.

4. Section 96.15 is revised to read as follows:

§ 96.15 Waivers.

Applications for waivers that are permitted by statute for the block grants should be submitted to the Director, Centers for Disease Control and Prevention in the case of the preventive health and health services block grant; to the Administrator, Substance Abuse and Mental Health Services

Administration in the case of the community mental health services block grant and the substance abuse prevention and treatment block grant; to the Director, Maternal and Child Health Bureau in the case of the maternal and child health services block grant; and to the Director, Office of Community Services in the case of the community services block grant, the low-income home energy assistance program and the social services block grant. Beginning with fiscal year 1986, the Secretary's authority to waive the provisions of section 2605(b) of Public Law 97–35 (42 U.S.C. 8624(b)) under the low-income home energy assistance program is repealed.

Subpart C—Financial Management

5. Section 96.30 is amended by designating text of the current paragraph as paragraph (a), adding a heading to newly designated paragraph (a), and adding a new paragraph (b) to read as follows:

§ 96.30 Fiscal and administrative requirements.

(a) *Fiscal control and accounting procedures.* * * *

(b) *Financial summary of obligation and expenditure of block grant funds.*—(1) *Block grants containing time limits on both the obligation and the expenditure of funds.* After the close of each statutory period for the obligation of block grant funds and after the close of each statutory period for the expenditure of block grant funds, each grantee shall report to the Department:

(i) Total funds obligated and total funds expended by the grantee during the applicable statutory periods; and

(ii) The date of the last obligation and the date of the last expenditure.

(2) *Block grants containing time limits only on obligation of funds.* After the close of each statutory period for the obligation of block grant funds, each grantee shall report to the Department:

(i) Total funds obligated by the grantee during the applicable statutory period; and

(ii) The date of the last obligation.

(3) *Block grants containing time limits only on expenditure of funds.* After the close of each statutory period for the expenditure of block grant funds, each grantee shall report to the Department:

(i) Total funds expended by the grantee during the statutory period; and

(ii) The date of the last expenditure.

(4) *Submission of information.* Grantees shall submit the information required by paragraph (b)(1), (2), and (3) of this section on OMB Standard Form 269A, Financial Status Report (short form). Grantees are to provide the requested information within 90 days of the close of the applicable statutory grant periods.

Subpart D—Direct Funding of Indian Tribes and Tribal Organizations

6. Section 96.41 is amended by revising paragraph (a) and by adding a new paragraph (c) to read as follows:

§ 96.41 General determination.

(a) The Department has determined that, with the exception of the circumstances addressed in paragraph (c) of this section, Indian tribes and tribal organizations would be better served by means of grants provided directly by the Department to such tribes and organizations out of their State's allotment of block grant funds than if the State were awarded its entire allotment. Accordingly, with the exception of situations described in paragraph (c) of this section, the Department will, upon request of an eligible Indian tribe or tribal organization and where provided for by statute, reserve a portion of the allotment of the State(s) in which the tribe is located, and, upon receipt of a complete application and related submission meeting statutory and regulatory requirements, grant it directly to the tribe or organization.

* * * * *

(c) The Department has determined that Indian tribal members eligible for the funds or services provided through the block grants would be better served by the State(s) in which the tribe is located rather than by the tribe, where:

(1) The tribe has not used its block grant allotment substantially in accordance with the provisions of the relevant statute(s); and

(2) Following the procedures of 45 CFR 96.51, the Department has withheld tribal funds because of those deficiencies; and

(3) The tribe has not provided sufficient evidence that it has removed or corrected the reason(s) for withholding. In these cases, block grant funds reserved or set aside for a direct grant to the Indian tribe will be awarded to the State(s), and the State(s) will provide block grant services to the service population of the tribe. Before awarding these funds to the State(s), the Department will allow as much time as it determines to be reasonable for the tribe to correct the conditions that led to withholding, consistent with provision of timely and meaningful services to the tribe's service population during the fiscal year. If a State(s) is awarded funds under this paragraph, the State(s) will receive all remaining funds set aside for the tribe for the Federal fiscal year for which the award is made. Where the Department has withheld funds from a tribe and the tribe has not taken satisfactory corrective action by the first day of the following fiscal year, all of the funds to serve the tribe's service population for the following fiscal year will be awarded to the State(s). The State(s) is responsible for providing services to the service population of the tribe in these cases. This paragraph also applies when funds are withheld from a tribal organization.

7. Section 96.42 is amended by adding a new sentence to the end of paragraph (f) to read as follows:

§ 96.42 General procedures and requirements.

* * * * *

(f) * * * A tribe receiving direct block grant funding is not required to use those funds to provide tangible benefits to non-Indians living within the tribe's service area unless the tribe and the State(s) in which the tribe is located agree in writing that the tribe will do so.

8. A new § 96.49 is added to Subpart D to read as follows:

§ 96.49 Due date for receipt of all information required for completion of tribal applications for the low-income home energy assistance block grants.

Effective beginning in FY 2001, for the low-income home energy assistance program, Indian tribes and tribal organizations that make requests for direct funding from the Department must insure that all information necessary to complete their application is received by December 15 of the fiscal year for which funds are requested, unless the State(s) in which the tribe is located agrees to a later date. After December 15, funds will revert to the State(s) in which the tribe is located, unless the State(s) agrees to a later date. If funds revert to a State, the State is responsible for providing low-income home energy assistance program services to the service population of the tribe.

Subpart E—Enforcement

9. A new section 96.53 is added to subpart E to read as follows:

§ 96.53 Length of withholding.

Under the low-income home energy assistance program and community services block grant, the Department may withhold funds until the Department finds that the reason for the withholding has been removed.

Subpart H—Low-Income Home Energy Assistance Program

10. Section 96.81 is revised to read as follows:

§ 96.81 Carryover and reallotment.

(a) *Scope.* Pursuant to section 2607(b) of Public Law 97–35 (42 U.S.C. 8626(b)), this section concerns procedures relating to carryover and reallotment of regular LIHEAP block grant funds authorized under section 2602(b) of Public Law 97–35 (42 U.S.C. 8621(b)).

(b) *Required carryover and reallotment report.* Each grantee must submit a report to the Department by August 1 of each year, containing the information in paragraphs (b)(1) through (b)(4) of this section. The Department shall make no payment to a grantee for a fiscal year unless the grantee has complied with this paragraph with respect to the prior fiscal year.

(1) The amount of funds that the grantee requests to hold available for obligation in the next (following) fiscal year, not to exceed 10 percent of the funds payable to the grantee;

(2) A statement of the reasons that this amount to remain available will not be used in the fiscal year for which it was allotted;

(3) A description of the types of assistance to be provided with the amount held available; and

(4) The amount of funds, if any, to be subject to reallotment.

(c) *Conditions for reallotment.* If the total amount available for reallotment for a fiscal year is less than $25,000, the Department will not reallot such amount. If the total amount available for reallotment for a fiscal year is $25,000 or more, the Department will reallot such amount, except that the Department will not award less than $25 in reallotted funds to a grantee.

11. Section 96.82 is revised to read as follows:

§ 96.82 Required report on households assisted.

(a) Each grantee which is a State or an insular area which receives an annual allotment of at least $200,000 shall submit to the Department, as part of its LIHEAP grant application, the data required by section 2605(c)(1)(G) of Public Law 97–35 (42 U.S.C. 8624(c)(1)(G)) for the 12-month period corresponding to the Federal fiscal year (October 1–September 30) preceding the fiscal year for which funds are requested. The data shall be reported separately for LIHEAP heating, cooling, crisis, and weatherization assistance.

(b) Each grantee which is an insular area which receives an annual allotment of less than $200,000 or which is an Indian tribe or tribal organization which receives direct funding from the Department shall submit to the Department, as part of its LIHEAP grant application, data on the number of households receiving LIHEAP assistance during the 12-month period corresponding to the Federal fiscal year (October 1–September 30) preceding the fiscal year for which funds are requested. The data shall be reported separately for LIHEAP heating, cooling, crisis, and weatherization assistance.

(c) Grantees will not receive their LIHEAP grant allotment for the fiscal year until the Department has received the report required under paragraph (a) or (b) of this section.

12. Section 96.84 is amended by adding paragraph (d) as follows:

§ 96.84 Miscellaneous.

* * * * *

(d) *End of transfer authority.* Beginning with funds appropriated for FY 1994, grantees may not transfer any funds pursuant to section 2604(f) of Public Law 97–35 (42 U.S.C. 8623(f)) that are payable to them under the LIHEAP program to the block grant programs specified in section 2604(f).

13. Section 96.85 is amended by revising paragraph (a) to read as follows:

§ 96.85 Income Eligibility.

(a) *Application of poverty income guidelines and State median income estimates.* In implementing the income eligibility standards in section 2605(b)(2) of Public Law 97–35 (42 U.S.C. 8624(b)(2)), grantees using the Federal government's official poverty income guidelines and State median income estimates for households as a basis for determining eligibility for assistance shall, by October 1 of each year, or by the beginning of the State fiscal year, whichever is later, adjust their income eligibility criteria so that they are in accord with the most recently published update of the guidelines or estimates. Grantees may adjust their income eligibility criteria to accord with the most recently published revision to the poverty income guidelines or State median income estimates for households at any time between the publication of the revision and the following October 1, or the beginning of the State fiscal year, whichever is later.

* * * * *

[FR Doc. 99–26820 Filed 10–14–99; 8:45 am]

BILLING CODE 4150–04–U

DEPARTMENT OF COMMERCE

National Oceanic and Atmospheric Administration

50 CFR Parts 222 and 223

[Docket No. 950427117–9271–10; I.D.100499D]

RIN 0648–AH97

Sea Turtle Conservation; Shrimp Trawling Requirements

AGENCY: National Marine Fisheries Service (NMFS), National Oceanic and Atmospheric Administration (NOAA), Commerce.

ACTION: Temporary rule; request for comments.

SUMMARY: NMFS issues this temporary action to allow the use of limited tow times as an alternative to the requirement to use Turtle Excluder Devices (TEDs) by shrimp trawlers operating south and west of Cape Lookout, North Carolina, in the offshore waters out to 3 nautical miles (nm) (5.5 km). NMFS has been notified by the Director of the Division of Marine Fisheries of the North Carolina Department of Environmental and Natural Resources (NCDMF) that large amounts of debris in Atlantic Ocean waters along the southern portion of the State in the aftermath of the Hurricanes' Dennis and Floyd are causing difficulty with the performance of TEDs. NMFS will monitor the situation to ensure there is adequate protection for sea turtles in this area and to determine whether impacts from the hurricanes continue to make TED use impracticable.

DATES: This action is effective from October 12, 1999, through November 12, 1999. Comments on this action are requested, and must be received by November 12, 1999.

ADDRESSES: Comments on this action should be addressed to the Chief, Endangered Species Division, Office of Protected Resources, NMFS, 1315 East-West Highway, Silver Spring, MD 20910.

FOR FURTHER INFORMATION CONTACT: Charles A. Oravetz, 727–570–5312, or Barbara A. Schroeder, 301–713–1401.

SUPPLEMENTARY INFORMATION:

Background

All sea turtles that occur in U.S. waters are listed as either endangered or threatened under the Endangered Species Act of 1973 (ESA). The Kemp's ridley (*Lepidochelys kempii*), leatherback (*Dermochelys coriacea*), and hawksbill (*Eretmochelys imbricata*) are listed as endangered. Loggerhead

(*Caretta caretta*) and green (*Chelonia mydas*) turtles are listed as threatened, except for populations of green turtles in Florida and on the Pacific coast of Mexico, which are listed as endangered.

The incidental take of these species, as a result of shrimp trawling activities, has been documented in the Gulf of Mexico and along the Atlantic. Under the ESA and its implementing regulations, taking sea turtles is prohibited, with exceptions identified in 50 CFR 223.206. Existing sea turtle conservation regulations (50 CFR part 223, subpart B) require most shrimp trawlers operating in the Gulf and Atlantic areas to have a NMFS-approved TED installed in each net rigged for fishing year-round.

The regulations provide for the use of limited tow times as an alternative to the use of TEDs for vessels with certain specified characteristics or under certain special circumstances. The provisions of 50 CFR 223.206 (d)(3)(ii) specify that the Assistant Administrator for Fisheries, NOAA (AA), may authorize compliance with tow time restrictions as an alternative to the TED requirement, if [she] determines that the presence of algae, seaweed, debris, or other special environmental conditions in a particular area makes trawling with TED-equipped nets impracticable. The provisions of 50 CFR 223.206(d)(3)(i) specify the maximum tow times that may be used when tow-time limits are authorized as an alternative to the use of TEDs. The tow times may be no more than 55 minutes from April 1 through October 31 and no more than 75 minutes from November 1 through March 31. These tow time limits are designed to minimize the level of mortality of sea turtles that are captured by trawl nets not equipped with TEDs.

Recent Events

At the end of August 1999, Hurricane Dennis moved slowly along the Outer Banks of North Carolina, hitting the coast with heavy winds and surf. Dennis lingered along the North Carolina coast and came ashore east of Beaufort, NC, on September 4. Less than 2 weeks later, Hurricane Floyd also struck North Carolina, making landfall at Cape Fear. Hurricane Floyd's most severe damage has resulted from the heavy rainfalls and record flooding in inland areas of North Carolina. The two hurricanes caused heavy discharge from flooding rivers which has deposited debris in the State's nearshore coastal waters. In an October 1 letter to the NMFS Southeast Regional Administrator, the Director of the NCDMF stated:

> Since the passage of the storm, the [NCDMF] has received complaints from shrimp fishermen about debris, including old tires, being caught in shrimp trawls and clogging their TEDs. The [NCDMF] has also observed this debris in sample trawls made after the storm aboard our research vessel, the R/V CAROLINA COAST. This debris includes old tires which have broken loose from our artificial reefs, trees, pilings, shingles, and wood washed into the ocean by flood waters. The material becomes lodged in the TEDs rendering them ineffective in expelling sea turtles as well as negatively impacting fishermen's catches.

The NCDMF requested that NMFS use its authority to allow the use of limited tow times as an alternative to TEDs in offshore waters out to 3 nm (5.5 km) from Cape Lookout to the North Carolina/ South Carolina border.

The effects of the flooding from Hurricane Floyd have been particularly severe in the eastern inland portions of North Carolina. The inshore shrimp fishing areas in Core, Pamlico, and Albemarle sounds that provide the majority of the State's shrimp catch have also likely been inundated with debris. At this time, however, those inshore areas are still experiencing considerable flooding and freshwater intrusion, and most of the shrimp are likely to have been washed out of the sounds. NMFS and the NCDMF will continue to monitor the situation in those inshore areas to determine the need for any additional action.

Special Environmental Conditions

The AA finds that the impacts of Hurricanes Floyd and Dennis have created special environmental conditions that may make trawling with TED-equipped nets impracticable. Therefore, the AA issues this notice to authorize the use of restricted tow times as an alternative to the use of TEDs in the offshore waters of the territorial sea of the State of North Carolina from the North Carolina/South Carolina border to 076°32' W., the line of longitude through Cape Lookout. The NCDMF is continuing to monitor the situation and is cooperating with NMFS in determining the ongoing extent of the debris problem in North Carolina offshore waters. Moreover, the NCDMF Director has stated that the State's enforcement officers would enforce the restricted tow times. Ensuring compliance with tow time restrictions is critical to effective sea turtle protection, and the commitment from the NCDMF Director to provide additional enforcement of the tow time restrictions is an important factor enabling NMFS to issue this authorization.

Continued Use of TEDs

NMFS encourages shrimp trawlers in North Carolina offshore waters to continue to use TEDs if possible, even though they are authorized, under this notice, to use restricted tow times. NMFS studies have shown that the problem of clogging by seagrass, algae or by other debris is not unique to TED-equipped nets. When fishermen trawl in problem areas, they may experience clogging with or without TEDs. A particular fishermen's concern, however, is that clogging in a TED-equipped net may hold open the turtle escape opening and increase the risk of shrimp loss. On the other hand, TEDs also help exclude certain types of debris and allow shrimpers to conduct longer tows.

NMFS gear experts provide several operational recommendations to fishermen to maximize the debris exclusion ability of TEDs that may allow some fishermen to continue using TEDs without resorting to restricted tow times. To exclude debris, NMFS recommends hard TEDs made of either solid rod or of hollow pipe that incorporate a bent angle at the escape opening, in a bottom-opening configuration. In addition, the installation angle of a hard TED in the trawl extension is an important performance element in excluding debris from the trawl. High installation angles can result in debris clogging the bars of the TED; NMFS recommends an installation angle of 45°, relative to the normal horizontal flow of water through the trawl, to optimize the TED's ability to exclude turtles and debris. Furthermore, the use of accelerator funnels, which are allowable modifications to hard TEDs, is not recommended in areas with heavy amounts of debris or vegetation. Lastly, the webbing flap that is usually installed to cover the turtle escape opening may be modified to help exclude debris quickly: the webbing flap can either be shortened by cutting it horizontally so that it does not overlap the frame of the TED or be slit in a fore-and-aft direction to facilitate the exclusion of debris.

All of the above-listed recommendations represent legal configurations of TEDs for shrimpers in the offshore areas of North Carolina (not subject to special requirements effective in the Atlantic Shrimp Fishery-Sea Turtle Conservation Area). This notice authorizes the use of restricted tow times as an alternative to the required use of TEDs. This action does not authorize any other departure from the TED requirements, including any illegal modifications to TEDs. In particular, if TEDs are installed in trawl nets, they may not be sewn shut.

Alternative to Required Use of TEDs

The authorization provided by this temporary action applies to all shrimp trawlers that are operating in offshore waters of the territorial sea (within 3 nm (5.5 km)) of the State of North Carolina, from the North Carolina/South Carolina border to 076°32' W., the line of longitude through Cape Lookout, in areas which the State has opened to shrimping and who would otherwise be required to use TEDs in accordance with the requirements of 50 CFR 223.206(d)(2). ''Offshore waters,'' as defined at 50 CFR 222.102, means the marine and tidal waters seaward of the 72 COLREGS demarcation line (International Regulations for Preventing Collisions at Sea, 1972), as depicted or noted on nautical charts published by NOAA (Coast Charts, 1:80,000 scale) and as described in 33 CFR part 80. Instead of the required use of TEDs, shrimp trawlers may opt to comply with the sea turtle conservation regulations by using restricted tow times. Through October 31, 1998, a shrimp trawler utilizing this authorization must limit tow times to no more than 55 minutes, measured from the time trawl doors enter the water until they are retrieved from the water. From November 1, 1999 until November 12, 1999, tow times must be limited to no more than 75 minutes measured from the time trawl doors enter the water until they are retrieved from the water.

Additional State Requirements

The affected area for this exemption lies entirely within the state waters of North Carolina. Nothing in this notice should be considered to affect any State fishing requirement. The NCDMF Director may issue a proclamation specifying additional requirements for shrimp trawlers working under this exemption. Fishermen must comply with all applicable State requirements, including any proclamations by the NCDMF Director issued to help implement this authorization.

Additional Conditions

NMFS expects that shrimp trawlers operating in North Carolina offshore waters without TEDs, in accordance with this authorization, will retrieve debris that is caught in their nets and return it to shore for disposal or to other locations defined by the NCDMF Director, rather than simply dispose the debris at sea. Proper disposal of debris should help the restoration of the shrimping grounds in the wake of the hurricanes. Shrimp trawlers are reminded that regulations under 33 U.S.C. 1901 *et seq*. (Act to Prevent Pollution From Ships) may apply to disposal at sea.

Alternative to Required Use of TEDs; Termination

The AA, at any time, may modify the alternative conservation measures through publication in the **Federal Register**, if necessary, to ensure adequate protection of endangered and threatened sea turtles. Under this procedure, the AA may modify the affected area or impose any necessary additional or more stringent measures, including more restrictive tow times or synchronized tow times, if the AA determines that the alternative authorized by this rule is not sufficiently protecting turtles, as evidenced by observed lethal takes of turtles aboard shrimp trawlers, elevated sea turtle strandings, or by insufficient compliance with the authorized alternative. The AA may also terminate this authorization for these same reasons or for the reasons that compliance cannot be monitored effectively, or that conditions do not make trawling with TEDs impracticable. The AA may modify or terminate this authorization, as appropriate, at any time. A document will be published in the **Federal Register** announcing any additional sea turtle conservation measures or the termination of the tow time option in North Carolina offshore waters. This authorization will expire automatically on November 12, 1999, unless it is explicitly extended through another notice published in the **Federal Register**.

Classification

This action has been determined to be not significant for purposes of E.O. 12866.

The AA has determined that this action is necessary to respond to an emergency situation to allow more efficient fishing for shrimp, while providing adequate protection for endangered and threatened sea turtles pursuant to the ESA and other applicable law.

Pursuant to 5 U.S.C. 553(b)(B), the AA finds that there is good cause to waive prior notice and opportunity to comment on this rule. It is impracticable and contrary to the public interest to provide prior notice and opportunity for comment. The AA finds that an unusually large amount of debris exists in the aftermath of Hurricanes Dennis and Floyd, creating special environmental conditions that may make trawling with TED-equipped nets impracticable. The AA has determined that the use of limited tow times for the described area and time would not result in a significant impact to sea turtles. Notice and comment are contrary to the public interest in this instance because providing notice and comment would prevent the agency from providing relief within the necessary time frame. The public was provided with notice and an opportunity to comment on 50 CFR 223.206(d)(3)(ii).

Pursuant to 5 U.S.C. 553(d)(1), because this rule relieves a restriction, it is not subject to a 30-day delay in notice. NMFS is making the rule effective October 12, 1999, to ensure that North Carolina has adequate time to issue any necessary proclamations.

Since prior notice and an opportunity for public comment are not required to be provided for this action by 5 U.S.C. 553, or by any other law, the analytical requirements of 5 U.S.C. 601 *et. seq*. are inapplicable.

The AA prepared an Environmental Assessment (EA) for the final rule (57 FR 57348, December 4, 1992) requiring TED use in shrimp trawls and creating the regulatory framework for the issuance of notices such as this. Copies of the EA are available (see **ADDRESSES**).

Dated: October 8, 1999.

Andrew A. Rosenberg,

Deputy Assistant Administrator for Fisheries, National Marine Fisheries Service.

[FR Doc. 99–26976 Filed 10–12–99; 4:31 pm]

BILLING CODE 3510–22–F

DEPARTMENT OF COMMERCE

National Oceanic and Atmospheric Administration

50 CFR Parts 222 and 223

[Docket No.991007270–9270–01; I.D.090399E]

RIN 0648–AM89

Sea Turtle Conservation; Summer Flounder Trawling Requirements

AGENCY: National Marine Fisheries Service (NMFS), National Oceanic and Atmospheric Administration (NOAA), Commerce.

ACTION: Interim final rule; request for comments.

SUMMARY: The National Marine Fisheries Service (NMFS) is issuing this interim final rule to amend the regulations that require summer flounder trawlers to use Turtle Excluder Devices (TEDs) in waters off Virginia and North Carolina to reduce the incidental capture of endangered and threatened sea turtles. NMFS is reguiring that any approved hard TED or

special TED installed in a summmer flounder trawl be installed in a TED extension (a cylinder of webbing in which the TED is installed). NMFS also is introducing specifications for the TED extensionand requiring that the TED extension be constructed of webbing no larger than 3.5–inch (8.9 cm) stretched mesh. This interim final rule is necessary to prevent adverse impacts to turtles in the upcoming fall/winter summer flounder trawling season.

DATES: This rule is effective November 15, 1999. Comments on this rule are requested, and must be received by December 14, 1999.

ADDRESSES: Requests for a copy of the environmental assessment (EA) prepared for this interim final rule, and comments on this action, should be addressed to the Chief, Endangered Species Division, Office of Protected Resources, NMFS, 1315 East-West Highway, Silver Spring, MD 20910. Requests for copies of the reports on 1999 TED testing should be addressed to the Chief, Harvesting Systems Division, Mississippi Laboratories, Southeast Fisheries Science Center, NMFS, P.O. Drawer 1207, Pascagoula, MS 39568–1207.

FOR FURTHER INFORMATION CONTACT: Charles A. Oravetz, 727–570–5312.

SUPPLEMENTARY INFORMATION:

Background

All sea turtles that occur in U.S. waters are listed as either endangered or threatened under the Endangered Species Act of 1973 (ESA). The Kemp's ridley (*Lepidochelys kempii*), leatherback (*Dermochelys coriacea*), and hawksbill (*Eretmochelys imbricata*) are listed as endangered. Loggerhead (*Caretta caretta*) and green (*Chelonia mydas*) turtles are listed as threatened, except for breeding populations of green turtles in Florida and on the Pacific coast of Mexico, which are listed as endangered.

The incidental capture and mortality of these sea turtles during summer flounder trawling has been documented along the Atlantic seaboard. Under the ESA and its implementing regulations, taking sea turtles is prohibited, with exceptions identified in 50 CFR 223.206. Existing sea turtle conservation regulations (50 CFR 223.205 and 223.206) require summer flounder trawlers operating in Atlantic waters between Cape Charles, VA and the NC/SC border to have a NMFS-approved TED installed in each net rigged for fishing, when sea turtles are present. TEDs currently approved by NMFS for summer flounder trawling include single-grid hard TEDs and hooped hard TEDs conforming to a generic description, the Parker soft TED, and two types of special hard TEDs.

Current TED Requirements

The use of TEDs has been required in the summer flounder trawl fleet off North Carolina and southern Virginia since the fall of 1992 through a series of temporary or interim rules. NMFS published a final rule on January 24, 1996 (61 FR 1846), that finalized the requirements for flounder trawlers to use TEDs in the ''summer flounder fishery-sea turtle protection area'' which includes the offshore waters between 37°05' N. lat. (Cape Charles, VA) and the NC/SC border. That final rule also provides for a seasonal exemption from the TED requirement north of Oregon Inlet, NC, from January 15 through March 15, annually. In addition, NMFS has tested and approved the use of a special hard TED, the Flounder TED, that was specifically designed for the summer flounder fishery (58 FR 54066, October 20, 1993). The Flounder TED is probably the primary style used in the fishery. It incorporates large holes in the bottom of the grid to allow the passage of large flatfish. Although the Parker soft TED may be used in the summer flounder fishery, its construction would likely cause a large loss of finfish catch, and NMFS believes that it is not used in the flounder fishery.

The regulations for the technical specifications are at 50 CFR 223.207. These specifications are quite detailed with respect to the final configuration of the TEDs themselves and any allowable modifications, such as accelerator funnels and webbing flaps. The specifications are intended to allow fisherman to choose all the other performance and construction variables of their trawl gear to match their fishing needs, consistent with any restrictions imposed for fishery management purposes. The mesh size of the trawl webbing, in particular, is usually chosen by the fisherman or regulated for fishery management purposes, and NMFS has never specified the size of webbing in which the TED must be installed. Shrimp trawlers generally install TEDs in webbing no larger than 2 inches (5.1 cm). At the time TEDs were first required in the summer flounder fishery, trawl mesh sizes of 3.5 or 4 inches (8.9 or 10.2 cm) were typical.

Amendment 10 to the Summer Flounder, Scup, and Black Sea Bass Fishery Management Plan

Amendment 10 was prepared by the Mid-Atlantic Fishery Management Council (the Council) and the Atlantic States Marine Fisheries Commission, in consultation with the New England and South Atlantic Fishery Management Councils. On December 3, 1997, NMFS published a final rule (62 FR 63872) to implement a number of changes to the summer flounder regulations, as proposed in Amendment 10. Previously, a minimum mesh size requirement of 5.5–inch (14.0 cm) diamond mesh or 6–inch (15.2 cm) square mesh had applied to the codend of the net. The final rule extended this minimum mesh size requirement to the body and extension(s) of the net, effective June 3, 1998. The reason for the change in the mesh regulations was that the Council was concerned about the ''choking off'' or the constriction of codends in trawl nets in the summer flounder fishery, as a way of circumventing the codend mesh size requirements. The Council was concerned that continued poor compliance with mesh-size regulations would result in higher fishing mortality rates and in a decreased rate of stock recovery for summer flounder. Applying the minimum mesh-size throughout the codend, extension(s), and body of the net was intended to eliminate this problem.

The TED Extension

Hard TEDs and special hard TEDs are almost always installed into a short cylinder of webbing, called a TED extension, rather than installed directly into the trawl. The TED extension can then be sewn directly to the net, connecting the codend to the body, or any other extension. Using TED extensions not only makes correct construction of a TED easier, but in the summer flounder fishery, where TEDs are only required in certain areas, it greatly simplifies the process of installing and removing the TED as the boat moves into and out of the summer flounder-sea turtle protection area.

When summer flounder trawlers were about to begin working in the summer flounder-sea turtle protection area in the fall of 1998, fishermen began reporting problems installing and using TEDs with the newly required 5.5–inch (14.0–cm) mesh in the TED extension. They were concerned that, when using a larger mesh, the TED would be attached to fewer individual meshes and would therefore be weaker. In addition, they reported difficulties installing the TEDs at an appropriate angle to the water flow because of the longer individual meshes. Proper TED angle is an important performance factor for the TED's ability to exclude turtles and retain catch. Lastly, some captains were concerned that the large mesh in the immediate vicinity of the TED might

present an entanglement risk to the turtles.

Summary of Observer Results

Through experimental testing of soft TEDs, which use panels of relatively large mesh webbing, NMFS has repeatedly observed that sea turtles can become entangled in trawl webbing as small as 4–inch (10.2–cm), particularly when the turtles have to maneuver in a constricted space or when the webbing is poorly installed and slack. As soon as this potential problem with the large mesh TED extensions was noted, NMFS placed observers aboard summer flounder trawlers. Between November 30, 1998 and February 19, 1999, 140 flounder hauls were observed on boats fishing between the mouth of Chesapeake Bay and Cape Lookout, NC. Thirteen turtles were observed captured in nets equipped with working TEDs installed in large mesh webbing. Of those, the observers specifically noted in five cases that the turtles had reached the TEDs, but had become entangled in the TED extensions when their flippers protruded through the 5.5 inch (14.0 cm) mesh. In four of the other captures, the TED openings were blocked by large amounts of fish around the TED, which was attributed by one captain to the new 5.5 inch (14.0 cm) mesh size. Excluding one turtle that was dead before it was caught, 0.033 turtles were caught per observed hour of trawling with TEDs during the winter of 1998–1999 (NMFS, unpublished data). All of the observed captures were north of Cape Hatteras. This capture rate, with TEDs, is twice the capture rate of 0.0167 turtles per hour, without TEDs, that was observed during the 1991–1992 season (Epperly *et al*., 1995). Although other factors—primarily the warm ocean temperatures last winter and their effect on turtle distribution—make direct comparisons of these catch rates difficult, the data still indicated that the effectiveness of the TEDs was likely seriously compromised by the large mesh webbing.

Summary of TED Testing Results

NMFS decided to further investigate the risk of turtle capture in large-mesh TED extensions during controlled TED testing. In June 1999, NMFS gear researchers conducted a TED testing session in the clear waters off Panama City, FL. Small loggerhead turtles were introduced into a flounder trawl with 5.5 inch (14.0 cm) mesh webbing throughout, including the TED extension. Four out of eight turtles became entangled in the webbing immediately forward of the TED and could not escape during the 5–minute time limit for the test. It was observed in previous TED testing that the turtles are stopped by the bars of the TED and must spend some amount of time exploring the extension before they find the exit hole and escape. During this active exploration, they can easily insert their head or flipper into a large opening but can then become entangled. NMFS originally intended to try to quantify any increased capture rate due to the large-mesh webbing more precisely using more test turtles. It quickly became clear that the capture rate was excessive, however, and the test was terminated. When the mesh size of the TED extension was changed to 3.5 inches (8.9 cm), and no entanglements occurred.

Provisions of this Interim Final Rule

After considering the comments of the Council, reports from fishermen, observer data, and TED testing results, NMFS has determined that the use of large-mesh webbing around a TED installed in a summer flounder trawl can result in high rate of sea turtle entanglement and capture. The use of smaller webbing in a TED extension can prevent these captures. Fishermen have traditionally used a smaller mesh size for TED extensions, which has the advantages of greater strength, consistency of installation, and reduced clogging with bycatch. Therefore, to avoid adverse impacts on sea turtles, NMFS is requiring the use of TED extensions with hard TEDs and special hard TEDs installed in summer flounder trawls. NMFS is also specifying the mesh size for the TED extension. The TED extension must be constructed of webbing no larger than 3.5 inch (8.9 cm) stretched mesh. The TED extension must extend at least 24 inches (61.0 cm) but nor more than 36 inches (91.4 cm) forward of the leading edge of the TED and aft of the trailing edge of the grid.

Relationship of This Rule to Other Regulations

This rule is intended to clarify explicitly the requirements affecting the use of approved TEDs in summer flounder trawls. Regulations affecting summer flounder trawl gear have been promulgated by NMFS under two different legal authorities. Regulations pursuant to the ESA are contained in 50 CFR parts 222 and 223, while regulations pursuant to the Magnuson-Stevens Fishery Conservation Management Act are contained in 50 CFR part 648. This interim final rule does not change the mesh size requirements of 50 CFR 648.104(a)(1) for the body, codend, or extension(s) - other than the TED extension - portions of a summer flounder trawl net. Nor does this rule change any other aspect of the regulations for TED construction and installation, specified in 50 CFR 223.207. In particular, webbing flaps used to cover the escape openings of hard TEDs in summer flounder trawls must be constructed of webbing no larger than 1–5/8 inch (4.1 cm) stretched mesh, as specified at 50 CFR 223.207(d)(3).

Request for Comments

NMFS is requesting input and will accept written comments (see **ADDRESSES**) on this interim final rule until December 14, 1999. Any comments, suggestions, or additional data and information on this action will be taken into consideration before a final determination is made.

References

Epperly, S.A., J. Braun, A.J. Chester, F.A. Cross, J.V. Merriner, and P.A. Tester. 1995. Winter distribution of sea turtles in the vicinity of Cape Hatteras and their interactions with the summer flounder trawl fishery. Bulletin of Marine Science, 56(2):547–568.

NMFS. Unpublished data. Mid-Atlantic coastal trawl fishery observer data 98/99. Northeast Fisheries Science Center.

Classification

This action has been determined to be not significant for purposes of E.O. 12866.

The Assistant Administrator for Fisheries, NOAA (AA), finds that good cause exists, under 5 U.S.C. 553(b)(B), to waive prior notice and an opportunity for public comment on this rule. It is impracticable and contrary to the public interest to provide prior notice and opportunity for comment because the fall summer flounder fishery is expected to begin off Virginia and North Carolina in November. Trawling with TEDs installed in large-mesh webbing is known to capture turtles at a high rate, and turtle abundances are probably highest in the fishing areas in the earliest part of the season. Preventable deaths of endangered and threatened species would occur unless TED extension mesh size changes are made prior to the beginning of fall fishing effort. Furthermore, this fishery is highly valuable and anticipated by the participants, but is limited by quota allocations, and it frequently is very short. Consequently, fishers may experience significant, avoidable impacts if TED extension mesh sizes are changed during the course of the fishery and fishers lose any of their limited fishing time coming into compliance.

Fishers traditionally have to re-equip their nets with TEDs and make any needed net repairs before the fall season begins. Prompt implementation of this mesh size change will allow them to use their rigging time to come into compliance. With sufficient opportunity to make the changes, the mesh size changes in themselves pose a minimal burden on the fishers. The cost of the required materials (new webbing) is estimated at less than $20 per net, and many fishers can make the needed changes themselves, estimated at about two person-hours per boat. Finally, the use of small mesh webbing adjacent to the TED had been a traditional gear configuration in this fishery prior to the June 3, 1998, requirement for the larger mesh size specified through the Magnuson-Stevens Fishery Conservation Management Act in 50 CFR part 648. Thus, this interim final rule allows for the traditional practice.

Because prior notice and opportunity for public comment are not required for this rule by 5 U.S.C. 553, or any other law, the analytical requirements of the Regulatory Flexibility Act, 5 U.S.C. 601 *et seq.*, are inapplicable.

This rule does not contain a collection-of-information requirement for purposes of the Paperwork Reduction Act.

The AA prepared an EA for this rule which concludes that this rule will have no significant impact on the human environment. A copy of the EA is available (see **ADDRESSES**).

List of Subjects in 50 CFR Part 223

Endangered and threatened species, Exports, Imports, Marine mammals, Transportation.

Dated: October 8, 1999.

Andrew A. Rosenberg,

Deputy Assistant Administrator for Fisheries, National Marine Fisheries Service.

For the reasons set out in the preamble, 50 CFR part 223 is amended as follows:

PART 223—THREATENED MARINE AND ANADROMOUS SPECIES

1. The authority citation for part 223 continues to read as follows:

Authority: 16 U.S.C. 1531 - 1543; subpart B, § 223.12 also issued under 16 U.S.C. 1361 *et seq.*

2. In § 223.206, paragraph (d)(2)(iii)(A) is revised to read as follows:

§ 223.206 Exceptions to prohibitions relating to sea turtles.

* * * * *

(d) * * *

(2) * * *

(iii) * * *

(A) *TED requirement.* (*1*) Any summer flounder trawler in the summer flounder fishery-sea turtle protection area must have an approved TED installed in each net that is rigged for fishing. A net is rigged for fishing if it is in the water, or if it is shackled, tied, or otherwise connected to any trawl door or board, or to any tow rope, cable, pole or extension, either on board or attached in any manner to the summer flounder trawler. Exceptions to the TED requirement for summer flounder trawlers are provided in paragraph (d)(2)(iii)(B) of this section.

(*2*) Any approved hard TED or special hard TED installed in a summer flounder trawl must be installed in a TED extension. The TED extension is a cylindrical piece of webbing distinct from the main trawl's body, wings, codend, and any other net extension(s). The TED extension must be constructed of webbing no larger than 3.5 inch (8.9 cm) stretched mesh. The TED extension must extend at least 24 inches (61.0 cm) but not more than 36 inches (91.4 cm) forward of the leading edge of the TED and aft of the trailing edge of the grid.

* * * * *

PART 223 [Amended]

3. Figure 6 to part 223 is added to read as follows:

BILLING CODE 3510–22–F

FIGURE 6 to Part 223—TED Extension in Summer Flounder Trawl

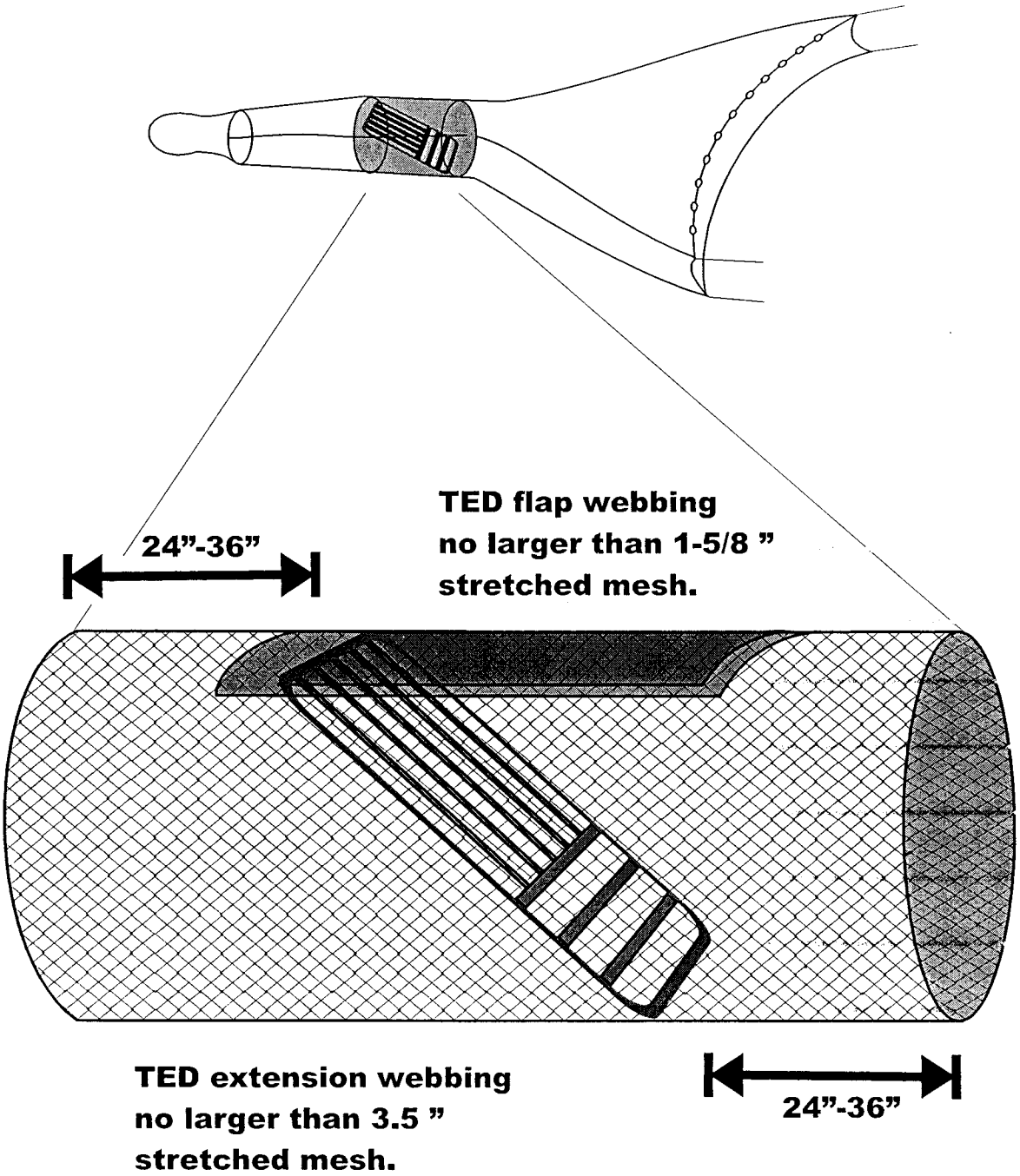

[FR Doc. 99–27012 Filed 10–14–99; 8:45 am]
BILLING CODE 3510–22–C

DEPARTMENT OF COMMERCE

National Oceanic and Atmospheric Administration

50 CFR Part 679

[Docket No. 990304062–9062–01; I.D. 100899C]

Fisheries of the Exclusive Economic Zone Off Alaska; Pollock in Statistical Area 620 of the Gulf of Alaska

AGENCY: National Marine Fisheries Service (NMFS), National Oceanic and Atmospheric Administration (NOAA), Commerce.

ACTION: Closure.

SUMMARY: NMFS is prohibiting directed fishing of pollock in Statistical Area 620 of the Gulf of Alaska (GOA). This action is necessary to prevent exceeding the 1999 total allowable catch (TAC) in this area.

DATES: Effective 1200 hrs, Alaska local time (A.l.t.), October 12, 1999, until 2400 hrs, A.l.t., December 31, 1999.

FOR FURTHER INFORMATION CONTACT: Thomas Pearson, 907–481–1780 or tom.pearson@noaa.gov.

SUPPLEMENTARY INFORMATION: NMFS manages the groundfish fishery in the GOA exclusive economic zone according to the Fishery Management Plan for Groundfish of the Gulf of Alaska (FMP) prepared by the North Pacific Fishery Management Council under authority of the Magnuson-Stevens Fishery Conservation and Management Act. Regulations governing fishing by U.S. vessels in accordance with the FMP appear at subpart H of 50 CFR part 600 and 50 CFR part 679.

The 1999 TAC of pollock in Statistical Area 620 of the GOA was established by the Final 1999 Harvest Specifications for Groundfish (64 FR 12094, March 11, 1999) as 38,840 metric tons (mt), determined in accordance with § 679.20(c)(3)(ii).

In accordance with § 679.20(d)(1)(i), the Administrator, Alaska Region, NMFS (Regional Administrator), has determined that the 1999 TAC of pollock in Statistical Area 620 will be reached. Therefore, the Regional Administrator is establishing a directed fishing allowance of 38,440 mt, and is setting aside the remaining 400 mt as bycatch to support other anticipated groundfish fisheries. In accordance with § 679.20(d)(1)(iii), the Regional Administrator finds that this directed fishing allowance has been reached. Consequently, NMFS is prohibiting directed fishing of pollock in Statistical Area 620 of the GOA.

Maximum retainable bycatch amounts may be found in the regulations at § 679.20(e) and (f).

Classification

This action responds to the best available information recently obtained from the fishery. It must be implemented immediately to prevent overharvesting the 1999 TAC of pollock in Statistical Area 620 of the GOA. A delay in the effective date is impracticable and contrary to the public interest. Further delay would only result in overharvest. NMFS finds for good cause that the implementation of this action should not be delayed for 30 days. Accordingly, under 5 U.S.C. 553(d), a delay in the effective date is hereby waived.

This action is required by 50 CFR 679.20 and is exempt from review under E.O. 12866.

Authority: 16 U.S.C. 1801 *et seq.*

Dated: October 12, 1999.

Bruce C. Morehead,

Acting Director, Office of Sustainable Fisheries, National Marine Fisheries Service.

[FR Doc. 99–26975 Filed 10–12–99; 4:31 pm]

BILLING CODE 3510–22–F

Proposed Rules

Federal Register
Vol. 64, No. 199
Friday, October 15, 1999

This section of the FEDERAL REGISTER contains notices to the public of the proposed issuance of rules and regulations. The purpose of these notices is to give interested persons an opportunity to participate in the rule making prior to the adoption of the final rules.

NATIONAL CREDIT UNION ADMINISTRATION

12 CFR Part 714

Leasing

AGENCY: National Credit Union Administration (NCUA).

ACTION: Proposed regulation.

SUMMARY: The proposed leasing regulation updates and redesignates NCUA's long-standing policy statement on leasing, Interpretive Ruling and Policy Statement (IRPS) 83–3, as an NCUA regulation. IRPS 83–3 authorizes federal credit unions to engage in either direct or indirect leasing and either open-end or closed-end leasing of personal property to their members if such leasing arrangements are the functional equivalent of secured loans. In addition, the proposed regulation formalizes NCUA's position, set forth in legal opinion letters, that FCUs do not have to own the leased property in an indirect leasing arrangement if certain requirements are satisfied.

DATES: Comments must be received on or before December 14, 1999.

ADDRESSES: Direct comments to Becky Baker, Secretary of the Board. Mail or hand-deliver comments to: National Credit Union Administration, 1775 Duke Street, Alexandria, Virginia 22314–3428. Fax comments to (703) 518–6319. E-mail comments to boardmail@ncua.gov. *Please send comments by one method only.*

FOR FURTHER INFORMATION CONTACT: Paul M. Peterson, Staff Attorney, Division of Operations, Office of the General Counsel, at the above address or by telephone: (703) 518–6555.

SUPPLEMENTARY INFORMATION:

A. Background

In 1983, the NCUA Board issued Interpretive Ruling and Policy Statement (IRPS) 83–3, Federal Credit Union Leasing of Personal Property to Members, 48 FR 52560 (November 21, 1983), stating that federal credit unions (FCUs) can lease personal property to their members if the leasing of the personal property is the functional equivalent of secured lending. The NCUA Board did not want FCUs engaged in leasing to assume burdens or subject themselves to risks greater than those ordinarily incident to secured lending. The NCUA Board determined that for leasing to be the functional equivalent of secured lending, a lease had to be a net, full payout lease with an estimated residual value not exceeding 25% unless guaranteed. In addition, an FCU engaged in leasing had to retain salvage powers over the leased property and maintain a contingent liability insurance policy with an endorsement for leasing.

In the supplementary section of IRPS 83–3, the NCUA Board stated that FCUs could engage in either direct or indirect leasing. That is, an FCU could either purchase property from a third party for the purpose of leasing such property to a member or purchase the lease and the leased property after the lease had been executed between the third party and the member. Further, FCUs could engage in either open-end or closed-end leasing, that is, an FCU could either require a member to assume the risk and responsibility for any difference in the estimated residual value and the actual value of the property at lease end or assume such risk itself.

After IRPS 83–3 was issued, NCUA received a number of inquiries regarding whether an FCU must own the leased property. NCUA responded through legal opinion letters that, in states requiring an entity engaged in leasing to be a licensed dealer, which involved posting a bond and complying with other state regulatory requirements, an FCU did not have to own the leased property. However, the FCU had to be named as the sole lienholder on the leased property and granted an unconditional, irrevocable power of attorney to transfer title to the leased property to the FCU.

Thereafter, the leasing industry argued that, irrespective of state limitations, an FCU should be able to take a lien on the leased property instead of having to own the property. The leasing industry stated that an FCU would be insulated from tort liability by not being the owner of the leased property and that an FCU's member would receive lower lease payments if a third-party lessor (the leasing company) was able to take advantage of certain tax benefits available only when the leasing company retained ownership of the property. NCUA concluded in legal opinion letters that although the direct and indirect leasing arrangements described in the supplementary section of IRPS 83–3 resulted in an FCU owning the leased property, such ownership was not required. NCUA's position was that the purchase or assignment of a lease and the receipt of a lien on the leased property was a form of permissible indirect leasing if the following requirements were satisfied: (1) The FCU was named as the sole lienholder on the leased property; (2) the FCU was assigned all of the leasing company's rights under the lease; and (3) the FCU obtained an unconditional, irrevocable power of attorney to transfer title in the leased property to the FCU.

NCUA undertook the proposed redesignation of IRPS 83–3 as an NCUA regulation as part of a regulatory review of all of its IRPS. Upon review of IRPS 83–3, the NCUA Board determined that it would be better suited as a regulation. 62 FR 11773 (March 13, 1997). The NCUA Board's goal in redesignating IRPS 83–3 as a regulation is to increase regulatory effectiveness by establishing a rule that states NCUA's current position on leasing, is easy to locate, and sets forth safety and soundness requirements to protect FCUs engaged in leasing.

On October 29, 1998, the NCUA Board issued a notice of proposed rulemaking and request for comment on leasing. 63 FR 57950 (October 29, 1998). The proposed leasing regulation adopted the policy on leasing set out in IRPS 83–3 and incorporated NCUA's position, set forth in legal opinion letters, that FCUs do not have to own the leased property in indirect leasing if certain requirements are satisfied. The comment period expired on January 27, 1999.

B. Comments

NCUA received fourteen comments on the proposed leasing regulation. Comments were received from five federal credit unions, one state-chartered credit union, three state leagues, two national credit union trade associations, one leasing company, one bank trade association, and a joint comment from an auditing company

and a bank consulting company. All commenters, except one, supported the NCUA Board's effort to establish a regulation on the leasing of personal property. The dissenting commenter believed that a leasing regulation was unnecessary because NCUA examiners could monitor an FCU's leasing program during regular examinations.

The NCUA Board has thoroughly evaluated the comments and has incorporated many of the suggested changes. Due to these changes to the original proposed leasing regulation, the Board has decided to issue a second proposed leasing regulation for additional comments.

C. Format

In drafting the proposed leasing regulation, the NCUA Board chose to use a plain English, question and answer format. The Board supports plain English as a means to increase regulatory comprehension and improve compliance among those affected by the regulation. Plain English drafting emphasizes the use of informative headings (often written as a question), lists and charts where appropriate, non-technical language, and sentences in the active voice. The NCUA wrote this proposed regulation as a series of questions and answers. The word ''you'' in an answer refers to an FCU.

Most commenters favored the NCUA Board's use of the question and answer (Q&A) style. One commenter, however, thought that Q&A style increased the potential for misunderstanding and confusion. The NCUA Board agrees that some regulations are more appropriate than others for Q&A. The NCUA Board believes that Q&A works well in the context of the leasing regulation.

D. Section-by-Section Analysis

Proposed Section 714.1—What Does This Part Cover?

Section 714.1 of the proposed regulation stated that Part 714 covers the standards and requirements that an FCU must follow when engaged in the lease financing of personal property. One commenter suggested that the term ''lease financing'' be replaced with ''transactions involving leasing.'' The commenter believes that there is a distinction between the terms ''leasing'' and ''financing,'' thus, using the term ''lease financing'' may lead to confusion. The NCUA Board agrees with the commenter and has changed ''lease financing'' to ''leasing.''

Proposed Section 714.2—What Are the Permissible Leasing Arrangements?

Section 714.2 of the proposed regulation stated that FCUs may engage in either direct or indirect leasing. One commenter suggested certain changes in § 714.2(b) to take into consideration the varying relations that may exist among parties in a leasing arrangement. Specifically, this commenter suggested that the NCUA Board should amend the sentence ''In indirect leasing, you purchase a lease and the leased property for the purpose of leasing such property to your member after the lease has been executed between a third party and your member'' by adding the phrase ''except as provided in § 714.3,'' substituting the word ''having'' for the second ''leasing,'' and inserting the word ''leased'' after the word ''property.'' The NCUA Board has added the phrase, ''except as provided in § 714.3.'' The NCUA Board believes that adding this cross-reference points the reader to a permissible form of indirect leasing which allows for title in the leased property to remain with a third party. However, the NCUA Board has not incorporated the commenter's other suggested changes. The NCUA Board wants the regulation to state clearly that an FCU, not another party, is to lease the personal property to its member. The commenter's suggested changes would imply otherwise.

In addition, the NCUA Board has added the text of prior § 714.6 to this section. Section 714.6 stated that an FCU can engage in either closed-end or open-end leasing, that is, either an FCU can assume the risk for the difference between the estimated residual value and the actual value of property at lease end or the lessee can assume the risk. Also, one commenter noted that the phrase ''relied upon residual value'' should be replaced with the phrase ''estimated residual value.'' The NCUA Board made this change for consistency and accuracy.

Proposed Section 714.3—Must You Own the Leased Property?

Section 714.3 of the proposed regulation states that an FCU does not have to own the leased property in an indirect leasing arrangement if three requirements are met: (1) The FCU receives a full assignment of the lease; (2) the FCU is named as the sole lienholder of the property; and (3) the FCU receives an unconditional, irrevocable power of attorney to transfer title in the leased property to itself.

The commenters supported the NCUA Board's decision not to require that an FCU own the leased property in an indirect leasing arrangement. One commenter noted that owning the leased property is not necessary since, in a loan or credit sale, an FCU does not own the underlying asset, but only has a lien. Three commenters contended that owning the leased property could open an FCU up to potential liability issues, tax issues, and state regulation and licensing requirements.

Six commenters, however, stated that they were against requiring a full assignment of the lease. Four of these commenters believed that the decision of whether to obtain a full assignment of a lease should be made by an FCU based on the circumstances of the leasing arrangement. Another commenter stated that the full assignment requirement was unnecessary because sales of or liens in leases are subject to Uniform Commercial Code (UCC) perfection rules. This commenter contended that a full assignment would not protect an FCU if a leasing company went bankrupt unless the full assignment had been perfected. In addition, one commenter expressed concern that, if a full assignment is required, leasing companies might refuse to do business with FCUs since they would not retain ownership of the leases. The commenter stated that leasing companies receive certain tax benefits from lease ownership and that, without those tax benefits, leasing companies may have no incentive to do business with FCUs.

Three commenters were against requiring an FCU to obtain a power of attorney. Two of the commenters stated that such a decision should be made by an FCU's attorney based on the circumstances of the FCU's leasing arrangement. Further, one of these commenters stated that a power of attorney is unnecessary because Article 9 of the Uniform Commercial Code provides an FCU with the right to take possession and dispose of collateral upon a default without a power of attorney. In addition, one commenter stated that a power of attorney provides little protection to an FCU in the face of a leasing company bankruptcy. The commenter suggested that obtaining a security agreement that grants an FCU a sole lien position in the leased property with the right to foreclose in the event of a default would be more beneficial.

The Board has reconsidered this form of indirect leasing in light of these comments and the recent bankruptcy of a leasing company (*Security Excel Corporation,* No. 96–32410 (Bankr. N.D. Ind.) (hereinafter *Security Excel*). In *Security Excel,* a bankruptcy that affected several credit unions, the trustee argued that the leasing company, not the FCU, owned both the leases and the leased property. The trustee further argued that the FCU had no security interest in either the leases or the leased property and, in the alternative, that whatever security interests might exist

were not properly perfected. Ultimately, the *Security Excel* case was settled, at some significant expense to certain credit unions.

As demonstrated in *Security Excel,* leasing arrangements that involve leaving title to the leased property in the name of the a third-party leasing company are complex and may involve significant risks to the FCU. In most of these leasing company arrangements, the NCUA Board understands that the FCU finances the full, or close to the full, value of the leased property and that the FCU will ultimately recover its full investment only if it collects all the lease payments and recoups all the proceeds from the leasing company's post-lease sale of the property. The FCU must be concerned about both the credit worthiness of the member and the solvency of the leasing company. In the event of insolvency of one or both parties, the FCU must be able to enforce its right to payment under the lease and, if necessary, its right to secure and dispose of the property as the collateral securing receipt of both lease payments and proceeds due from the post-lease property sale.

The fact that the FCU has no authority to lend money to a nonmember leasing company that is not a credit union service organization further complicates these arrangements. For example, the FCU must ensure that, despite the lack of a creditor-debtor relationship with the leasing company, the FCU has a well-defined security interest in the leased property. In addition, the FCU must make sure that its rights in the leased property and its ownership of the lease are properly recorded so as to perfect those rights against bankruptcy trustees and other third-party creditors. To take another example, a vehicle owned by a leasing company may be considered as ''inventory'' under the relevant commercial codes, and protection of a security interest in such inventory may well require steps beyond recording the lien on the certificate of title and filing the certificate with the department of motor vehicles.

In light of these issues, the legal arguments advanced in *Security Excel,* and the comments received on our previously proposed § 714.3, the NCUA Board is proposing that an FCU that does not own the leased property must take certain precautions.

First, the FCU must receive a full assignment of the lease, meaning that the FCU must become the owner of the lease. The NCUA Board believes that, if an FCU receives a full assignment of a lease and the assignment is properly recorded, the lease should not be subject to the claims of a bankruptcy trustee acting on behalf of a leasing company that becomes bankrupt. The Board notes that an assignment of various rights under a lease, such as the right to receive payments, is not the same as a full assignment of the lease. There are varying ways that an acceptable assignment may be drafted. Some examples are: ''Leasing Company assigns this lease to ABC Federal Credit Union'' or ''Leasing Company makes a full assignment of this lease to ABC Federal Credit Union'' or ''Leasing Company conveys all of its right, title, and interest in this lease to ABC Federal Credit Union.'' Language that purports to assign only one or more particular rights or remedies under the lease would not constitute a full assignment of the lease and so is unacceptable.

Second, the FCU must be the sole lienholder of the leased property. This language is consistent with IRPS 83–3, requiring that the lease must be the functional equivalent of a secured loan.

Third, the FCU must enter into a security agreement with the leasing company to protect the FCU's lien on the property. The security agreement must describe the FCU's interest in the property. It must set forth the terms and conditions upon which the leasing company or the member may be in default and thus entitle the FCU to take immediate possession of the property and dispose of it. The security agreement must be signed by the leasing company. The FCU must also take any further steps necessary to ensure that its security is properly perfected to protect the FCU should the leasing company be forced into bankruptcy. Thus, for example, if the leased property constitutes the lessor's inventory under state law, perfection may require filing with the appropriate state agency, such as the Secretary of State. See the Uniform Commercial Code, 9–302 and 9–401.

The NCUA Board believes that a power of attorney may be unnecessary for an FCU holding a well-defined and perfected security interest in the leased property. In the event of a default by leasing company or lessee, the FCU should be able to take possession and dispose of the collateral without the power of attorney. Thus, the new proposed rule no longer contains any requirement for a power of attorney. The Board notes, however, that the proposed rule does not prohibit an FCU from employing a power of attorney, in addition to a security agreement, as the FCU sees fit in any particular leasing arrangement.

Proposed Section 714.4—What Are the Lease Requirements?

Section 714.4 states that leases must be net, full payout leases, with a maximum estimated residual value of 25% of the original cost of the leased property unless guaranteed. One commenter suggested that the NCUA Board revise the description of net lease to allow FCUs to finance certain dealer included services, including mechanical breakdown protection, credit life and disability premiums, and license and registration fees. The Board does not believe that these dealer services, which are generally additional services purchased by a lessee to satisfy his or her obligations under the ''net'' lease concept, should be financed. The Board notes that these costs, if financed by the credit union, may raise safety and soundness issues, particularly if the lessee has made little or no down payment and so there is no value in the collateral to secure the financing of these particular services.

One commenter stated that the wording used to describe the full payout requirement was confusing and failed to specify an FCU's source of recovery to meet the requirement. The NCUA Board agrees with the commenter and has added a sentence stating that an FCU's source of recovery will come from the lessee's payments and the residual value of the leased property at the expiration of the lease term.

Five commenters wanted the NCUA Board to raise the estimated residual value limit. These commenters believed that the 25% estimated residual value limit was restrictive and placed FCUs at a disadvantage against other lenders that were not required to obtain a guarantee when an estimated residual value greater than 25% was used. Further, the five commenters suggested that the NCUA Board allow FCUs to self-insure against the increased risk associated with a higher estimated residual value. One commenter suggested that the NCUA Board allow FCUs to set their own estimated residual values as long as the combination of residual value insurance, manufacturer guarantees, and residual value reserves for loss maintained over the life of the leases is sufficient to cover the residual value risks assumed.

The NCUA Board believes that the risks associated with leasing are substantially reduced due to the 25% limit placed on estimated residual values and has not raised the limit. The NCUA Board notes that the Office of the Comptroller of the Currency (OCC) has very similar rules on estimated residual values. The OCC places a 25%

estimated residual value limit on bank leases, and requires banks to guarantee estimated residual values in excess of the 25% limit. 12 CFR 23.21(a)(2).

The Board also notes that the purpose of the leasing regulation is to facilitate a consumer financing transaction with a member that is roughly the equivalent of a secured loan. In the closed-end lease arrangement, which is the most common arrangement, the member lessee is not liable to the FCU for the payment of the residual value at the end of the lease. As the estimated residual value increases, the member's financial responsibility to the FCU, as a percent of the FCU's total investment, decreases correspondingly. If the NCUA Board were to permit significantly higher estimated residual value amounts, a lease transaction would lose its character of being substantially equivalent to secured lending to its member. Instead, the credit union would be dependent on the sale of the vehicle to recoup a significant part of its investment, and so would be in a business very similar to used car sales. Credit unions may not engage in the business of selling cars. See *M&M Leasing Corporation v. Seattle First National Bank,* 563 F.2d 1377 (9th Cir. 1977), *cert. denied,* 436 U.S. 958 (1978).

Proposed Section 714.5—What Is Required if an Estimated Residual Value Greater Than 25% Is Used?

Section 714.5 of the proposed regulation incorrectly stated the guarantee requirement when the estimated residual value exceeds 25% of the original cost of the leased property. In issuing the proposed regulation, the Board's intention was to adopt the leasing policy and requirements as contained in IRPS 83–3. Proposed § 714.5 incorrectly stated that, if a residual value greater than 25% was used, the *full* estimated residual value of the leased property must be guaranteed. Five commenters noted that a guarantee of the full value should not be required. IRPS 83–3 requires that only the estimated residual value above 25% of the original cost be guaranteed and, in this second proposed regulation, this section now reflects the requirement as stated in IRPS 83–3.

One commenter suggested revising § 714.5 to permit others parties, in addition to a manufacturer or insurance company, to guarantee the estimated residual value. IRPS 83–3 allowed the manufacturer, the lessee, or third party not affiliated with the FCU to guarantee the estimated residual value. The proposed regulation eliminated the lessee as a guarantor on the basis that it would be difficult to collect from a lessee or monitor the lessee's creditworthiness and capacity to meet the guarantee. However, the NCUA Board has revised § 714.5 to allow any financially capable party to guarantee the estimated residual value. Thus, a lessee, if properly qualified, could guarantee the estimated residual value. This approach is consistent with IRPS 83–3.

In addition, four commenters were against requiring insurance companies guaranteeing estimated residual values to have at least a B+ rating. These commenters believed that such a requirement was unnecessary and noted that the OCC's leasing regulation did not establish such a requirement. The NCUA Board believes that establishing a minimum rating standard ensures that the institutional guarantor has the resources to meet the guarantee.

The NCUA Board has amended the rating requirement to read ''The guarantor may also be an insurance company with an A.M. Best rating of at least a B+, or with the equivalent of at least an A.M. Best B+ rating from another major rating company.'' This amendment clarifies the source of the B+ rating and specifies that ratings from other rating companies may be used to establish financial capability.

Proposed Section 714.6—Are You Required To Retain Salvage Powers Over the Leased Property?

Section 714.6 states that an FCU must retain salvage powers over the leased property. One commenter suggested that the NCUA Board add the language ''pursuant to your contractual rights'' contained in subsection (b) to subsection (a) which sets forth a credit union's salvage powers. The NCUA Board does not believe that this additional language is needed and has left this section unchanged. However, the NCUA Board has deleted the reference to the assignment of ''a vendor's interest in a lease'' in § 714.6(b). The FCU must receive an assignment of the entire lease as required by § 714.3(a).

Proposed Section 714.7—What Are the Insurance Requirements Applicable to Leasing?

Section 714.7(a) requires an FCU to maintain a contingent liability insurance policy if it owns the leased property or, if it does not, it must be named as the co-insured. One commenter suggested that the NCUA Board also require an FCU to obtain excess liability insurance as well as the contingent liability insurance. The NCUA Board believes that such additional insurance is not needed to protect FCUs. Section 714.7(b) states that the lessee is to carry liability or collateral protection insurance on the leased property. The NCUA Board intended that both liability and collateral protection insurance were to be purchased, and has changed the word ''or'' to ''and.'' In addition, one commenter stated that, for the most part, FCUs are named as the loss payee on a physical damage coverage policy and as the additional insured on a liability insurance policy and this should be reflected in the proposed leasing regulation. The NCUA Board has adopted the commenter's changes.

Proposed Section 714.8—What Rate of Interest May Be Charged Under a Lease?

Section 714.8 stated that an FCU engaged in leasing may charge an interest rate higher than the usury limit set for FCUs engaged in lending. One commenter stated that § 714.8 reflects a misunderstanding of leases since leases do not have interest rates, only an implicit rate which may or may not be received depending on the ultimate residual recovery. The NCUA Board has reworded this section to eliminate the confusion. The Board also added language to clarify that 12 CFR 701.21(c)(6), prohibiting penalties for early payment, does not apply to leasing arrangements. Early termination is governed by the Consumer Leasing Act, 15 U.S.C. 1667–67f, and Regulation M, 12 CFR part 213.

Proposed Section 714.9—When Engaged in Indirect Leasing, Must You Comply With the Purchase of Eligible Obligation Rules Set Forth in § 701.23 of This Chapter?

Section 714.9 states that an FCU may participate in indirect leasing arrangements under its authority to make loans. The NCUA Board intended § 714.9 to inform FCUs that their participation in an indirect leasing arrangement does not subject them to the purchase of eligible obligation rules. However, two commenters stated that § 714.9 was unclear. Thus, the NCUA Board has added language to clarify this section and has changed the section title.

Proposed Section 714.10—What Other Laws Must You Comply With When Engaged in Leasing?

Section 714.10 sets forth the additional laws that an FCU must comply with when engaged in leasing. One commenter requested that the NCUA Board clarify whether FCUs are subject to state leasing disclosure laws. The NCUA Board amended § 714.10 to point out that credit unions must

comply with the Consumer Leasing Act (the Leasing Act). 15 U.S.C. 1667–67f. Section 1667e of the Leasing Act generally requires that lessors comply with state leasing laws if the state law is not in conflict with the Leasing Act or provides greater consumer protection than the Leasing Act. The Board also notes that, with regard to federal and state lending laws, the proposed language of § 714.10 requires compliance with § 701.21 of this chapter. Subsection 701.21(b) discusses the applicability of other federal and state lending laws in some detail.

Another commenter stated that the disclosure requirements of Regulation M are cumbersome and not easily understood, thus, NCUA should simplify the leasing disclosure requirements and employ something similar to the ''fed box'' used for truth-in-lending disclosures. The Board notes that there are already model disclosure forms in the appendix to Regulation M, and these forms set out leasing disclosures in a manner similar to the truth-in-lending ''fed box.''

E. Additional Comments

Two commenters suggested that the NCUA Board address balloon note programs or guaranteed buy-back programs in the proposed leasing regulation. The commenters did not provide any details explaining the balloon note or guaranteed buy-back programs.

The primary distinction between a loan and a lease is who owns the underlying property. In a loan, the borrower owns the property and the lender is a lienholder. In a lease, the borrower-lessee has no ownership or lienhold interest in the property. Accordingly, it is the NCUA Board's position that programs which involve loans and not leases are significantly different from leasing arrangements, and should not be addressed in a leasing regulation.

However, the NCUA Board would like to note, as stated in legal opinion letters, that balloon note or guarantee buy-back programs giving any borrower on a loan the option of returning property directly to the FCU at the end of the financing period are impermissible. Programs that authorize the borrower to turn the property into a third party for liquidation and cash recoupment may be acceptable.

F. Regulatory Procedures

Regulatory Flexibility Act

The NCUA Board certifies that the proposed regulation will not have a significant impact on a substantial number of small credit unions. Most small credit unions do not offer lease financing arrangements to their members. Accordingly, a regulatory flexibility analysis is not required.

Paperwork Reduction Act

The NCUA Board has determined that the requirement in § 714.5 that an FCU must obtain or have on file statistics documenting that a guarantor has the resources to meet an estimated residual value guarantee constitutes a collection of information under the Paperwork Reduction Act. The NCUA Board estimates that it will take an average of one to two hours to acquire, maintain, and evaluate such documentation. The NCUA Board estimates that approximately 750 FCUs are engaged in leasing, so that the total annual collection burden is estimated to be no more than 1500 hours. The NCUA Board submitted a copy of this rule to the Office of Management and Budget (OMB) for its review. OMB assigned control number 3133–0151 to this information collection. The control number will be displayed in the table at 12 CFR Part 795.

Executive Order 12612

Executive Order 12612 requires NCUA to consider the effect of its actions on state interests. The proposed regulation only applies to federal credit unions. The NCUA Board has determined that the proposed regulation does not constitute a significant regulatory action for the purposes of the Executive Order.

G. Agency Regulatory Goal

NCUA's goal is to promulgate clear and understandable regulations that impose minimal regulatory burden. We request your comments on whether the proposed amendment is understandable and minimally intrusive if implemented as proposed.

List of Subjects in 12 CFR Part 714

Credit unions, Leasing.

By the National Credit Union Administration Board on October 6, 1999.

Becky Baker,

Secretary to the Board.

Accordingly, NCUA proposes to add Part 714 to read as follows:

PART 714—LEASING

Sec.

714.1 What does this part cover?
714.2 What are the permissible leasing arrangements?
714.3 Must you own the leased property in an indirect leasing arrangement?
714.4 What are the lease requirements?
714.5 What is required if an estimated residual value greater than 25% is used?
714.6 Are you required to retain salvage powers over the leased property?
714.7 What are the insurance requirements applicable to leasing?
714.8 Are the early payment provisions, or interest rate provisions, applicable in leasing arrangements?
714.9 Are indirect leasing arrangements subject to the purchase of eligible obligation limit set forth in § 701.23 of this chapter?
714.10 What other laws must you comply with when engaged in leasing?

Authority: 12 U.S.C. 1756, 1757, 1766, 1785, 1789.

§ 714.1 What does this part cover?

This part covers the standards and requirements that you, a federal credit union, must follow when engaged in the leasing of personal property.

§ 714.2 What are the permissible leasing arrangements?

(a) You may engage in direct leasing. In direct leasing, you purchase personal property from a vendor, becoming the owner of the property at the request of your member, and then lease the property to that member.

(b) You may engage in indirect leasing. In indirect leasing, you purchase a lease and, except as provided in § 714.3, the leased property for the purpose of leasing such property to your member after the lease has been executed between a third party and your member.

(c) You may engage in open-end leasing. In an open-end lease, your member assumes the risk and responsibility for any difference in the estimated residual value and the actual value of the property at lease end.

(d) You may engage in closed-end leasing. In a closed-end lease, you assume the risk and responsibility for any difference in the estimated residual value and the actual value of the property at lease end.

§ 714.3 Must you own the leased property in an indirect leasing arrangement?

You do not have to own the leased property in an indirect leasing arrangement if:

(a) You obtain a full assignment of the lease. A full assignment is the assignment of all the rights, interests, obligations, and title in a lease to you, that is, you become the owner of the lease;

(b) You are named as the sole lienholder of the leased property;

(c) You receive a security agreement, signed by the leasing company, granting you a sole lien in the leased property and the right to take possession and dispose of the leased property in the

event of a default by the lessee, a default in the leasing company's obligations to you, or a material adverse change in the leasing company's financial condition; and

(d) You take all necessary steps to record and perfect your security interest in the leased property. Your state's Commercial Code may treat the automobiles as inventory, and require a filing with the Secretary of State.

§ 714.4 What are the lease requirements?

(a) Your lease must be a net lease. In a net lease, your member assumes all the burdens of ownership including maintenance and repair, licensing and registration, taxes, and insurance;

(b) Your lease must be a full payout lease. In a full payout lease, you must reasonably expect to recoup your entire investment in the leased property, plus the estimated cost of financing, from the lessee's payments and the estimated residual value of the leased property at the expiration of the lease term; and

(c) Your estimated residual value may not exceed 25% of the original cost of the leased property unless the amount above 25% is guaranteed. Estimated residual value is the projected value of the leased property at lease end. Estimated residual value must be reasonable in light of the nature of the leased property and all circumstances relevant to the leasing arrangement.

§ 714.5 What is required if an estimated residual value greater than 25% is used?

You may use an estimated residual value greater than 25% of the original cost of the leased property if a financially capable party guarantees the amount above 25% of the original cost of the property. The guarantor may be the manufacturer. The guarantor may also be an insurance company with an A.M. Best rating of at least a B+, or with at least the equivalent of an A.M. Best B+ rating from another major rating company. You must obtain or have on file financial documentation demonstrating that the guarantor has the resources to meet the guarantee.

§ 714.6 Are you required to retain salvage powers over the leased property?

You must retain salvage powers over the leased property. Salvage powers protect you from a loss and provide you with the power to take action if there is an unanticipated change in conditions that threatens your financial position by significantly increasing your exposure to risk. Salvage powers allow you:

(a) As the owner and lessor, to take reasonable and appropriate action to salvage or protect the value of the property or your interests arising under the lease; or

(b) As the assignee of a lease, to become the owner and lessor of the leased property pursuant to your contractual rights, or take any reasonable and appropriate action to salvage or protect the value of the property or your interests arising under the lease.

§ 714.7 What are the insurance requirements applicable to leasing?

(a) You must maintain a contingent liability insurance policy with an endorsement for leasing or be named as the co-insured if you do not own the leased property. Contingent liability insurance protects you should you be sued as the owner of the leased property. You must use an insurance company with a nationally recognized industry rating of at least a B+.

(b) Your member must carry the normal liability and collateral protection insurance on the leased property. You must be named as an additional insured on the liability insurance policy and as the loss payee on the collateral protection insurance policy.

§ 714.8 Are the early payment provisions, or interest rate provisions, applicable in leasing arrangements?

You are not subject to the early payment provisions set forth in § 701.21(c)(6) of this chapter. You are also not subject to the interest rate provisions in § 701.21(c)(7).

§ 714.9 Are indirect leasing arrangements subject to the purchase of eligible obligation limit set forth in § 701.23 of this chapter?

Your indirect leasing arrangements are not subject to the purchase of eligible obligation rules set forth in § 701.23 of this chapter if:

(a) You review the lease and other documents to determine that the arrangement complies with your leasing polices; and

(b) You receive a full assignment of the lease no more than five business days after it is signed by your member and a leasing company.

§ 714.10 What other laws must you comply with when engaged in leasing?

You must comply with the Consumer Leasing Act, 15 U.S.C. 1667–67f, and its implementing regulation, Regulation M, 12 CFR part 213. You must comply with state laws on consumer leasing, but only to the extent that the state leasing laws are consistent with the Consumer Leasing Act, 15 U.S.C. 1667e, or provide the member with greater protections or benefits than the Consumer Leasing Act. You are also subject to the lending rules set forth in § 701.21 of this chapter, except as provided in § 714.8 and § 714.9 of this part. The lending rules in § 701.21 address the preemption of other state and federal laws that impact on credit transactions.

[FR Doc. 99–26717 Filed 10–14–99; 8:45 am]

BILLING CODE 7535–01–P

NATIONAL CREDIT UNION ADMINISTRATION

12 CFR Parts 724 and 745

Trustees and Custodians of Pension Plans; Share Insurance and Appendix

AGENCY: National Credit Union Administration.

ACTION: Notice of proposed rulemaking.

SUMMARY: The National Credit Union Administration (NCUA) proposes to revise its rules regarding a federal credit union's authority to act as trustee or custodian of pension plans. The proposal permits federal credit unions in a territory, including the trust territories, or a possession of the United States, or the Commonwealth of Puerto Rico, to offer trustee or custodian services for Individual Retirement Accounts (IRAs), where otherwise permitted.

DATES: Comments must be received on or before December 14, 1999.

ADDRESSES: Direct comments to Becky Baker, Secretary of the Board. Mail or hand-deliver comments to: National Credit Union Administration, 1775 Duke Street, Alexandria, Virginia 22314–3428. Fax comments to (703) 518–6319. E-mail comments to boardmail@ncua.gov. *Please send comments by one method only.*

FOR FURTHER INFORMATION CONTACT: Dianne M. Salva, Staff Attorney, Division of Operations, Office of General Counsel, at the above address or telephone: (703) 518–6540.

SUPPLEMENTARY INFORMATION: NCUA has received many inquiries concerning the permissibility of federal credit unions (FCUs) in Puerto Rico offering IRA services to members. In the past, the agency has responded that FCUs in Puerto Rico cannot provide the trustee services attendant to an IRA account. Part 724 of NCUA's regulations permits FCUs to serve as trustees for IRA accounts only if the IRA accounts qualify for specific tax treatment under the Internal Revenue Code (IRC), and if they are created or organized in the United States. Part 724 has its roots in the Employee Retirement Income Security Act of 1974 (ERISA). ERISA amended the IRC so that federally-insured credit unions were recognized

as permissible trustees or custodians of Keogh plans and IRAs. ERISA, Pub. L. 93–406, § 1022(f) (1974). However, unlike banks and savings and loans, credit unions did not have other statutory authority to act as trustees; yet there was significant interest among credit unions in providing these trust services. NCUA reasoned that the incidental powers clause of the Federal Credit Union Act (FCUA), together with the IRC, made it possible for credit unions to perform the trustee and custodial function recognized by the IRC. But this finding was narrowly drawn; credit unions would not be authorized to provide general discretionary trustee services and they were not to act as trustees in cases other than pension plans. Further, NCUA determined that funds held in trust would be limited to share and share certificate accounts.

In 1985, NCUA published Interpretive Ruling and Policy Statement 85–1 (IRPS 85–1) in which it clarified its position that FCUs were permitted to act as trustees or custodians of IRA or Keogh plans established under the IRC, as long as the initial contribution to the plan was made to a share or share certificate account and the FCU would engage only in custodial duties with no exercise of investment discretion or advice. After the initial contribution was made to a share account, the IRA or Keogh was ''self-directed'' so that members could order subsequent transfers at their own risk. The preamble to IRPS 85–1 briefly retraced the history of FCU authority to serve as trustees of IRA and Keogh plans. It cites the ERISA amendment to the IRC recognizing FCUs as permissible trustees as the catalyst for the NCUA Board's finding that FCUs were authorized to act as trustees. However, it credits a 1978 amendment to the FCUA, which added a section covering share insurance of IRA and Keogh plans, as providing the statutory authority for FCUs to serve as trustees. 50 FR 48,176, Nov. 22, 1985.

In 1990, NCUA amended its pension trustee regulation, now redesignated 12 CFR part 724, to incorporate IRPS 85–1. In 1997, IRPS 85–1 was rescinded. Because of the strict limitations imposed on the trustee services FCUs offer members in connection with these types of accounts, NCUA has not encountered significant safety and soundness concerns related to IRA or Keogh accounts.

Today, the policy, as stated in 12 CFR part 724, still permits FCUs to offer IRAs and Keogh accounts created in accordance with the IRS Code. It is the IRC that requires such trust accounts be created in the United States. 26 U.S.C. 408(a). IRS regulations provide a definition of the United States limited to the States and the District of Columbia. 26 U.S.C. 7701(a)(9). The internal revenue laws of the United States are generally inapplicable in Puerto Rico. 48 U.S.C. 734. This effectively excludes IRAs created in the Commonwealth of Puerto Rico from the application of these provisions of the IRC and, therefore, excludes federal credit unions in Puerto Rico from benefiting from the authority granted by 12 CFR part 724. For some U.S. territories, such as Guam, the United States Code specifically extends the income tax laws of the United States to the territory, with the modification that ''Guam'' be substituted for the term ''United States'' in the territorial version of the law. 48 U.S.C. 1421i. The Northern Mariana Islands are the beneficiary of a similar arrangement. 48 U.S.C. 1681. The net effect of this is that IRAs can be established in these territories. The Virgin Islands, on the other hand, are subject to the IRC, but without the modification that ''Virgin Islands'' be substituted for the term ''United States.'' 48 U.S.C. 1397. This operates to prevent credit unions in the Virgin Islands from offering IRAs, because they cannot meet the IRC requirement that an IRA trust be created or organized in the United States.

The Puerto Rico Internal Revenue Code of 1994 (PRITA) is similar to the IRC. Like the IRC, the PRITA provides for a tax-deferred, individual retirement account for its citizens and, like the IRC, recognizes insured FCUs as permissible trustees for PRITA–IRAs established under Puerto Rican law. P.R. Laws Ann. Tit. 13, § 8569 (1995). However, because NCUA's regulation tracks the language of the IRC, which requires such trusts to be created in the United States, FCUs in Puerto Rico have been unable to meet their members' demands for PRITA–IRA trustee services.

The NCUA Board believes that FCUs in Puerto Rico should also be permitted to offer PRITA–IRAs to their members. While the FCUA does not grant FCUs plenary trust powers, it does permit them to exercise such incidental powers as are necessary to carry on their business. 17 U.S.C. 1757(17). When an FCU serves as a trustee for a member's IRA share or share certificate account, it does not exercise the powers normally associated with a trust account. Given that the discretion exercised by an FCU as trustee for this type of account is so limited, the function of the FCU as trustee is not significantly different from its function as the issuer of share accounts and share certificates. Based on the foregoing, the Board finds that the authority to offer these accounts is incidental to the FCU's authority to issue share accounts and share certificates. 12 U.S.C. 1757(6). Therefore, FCUs in Puerto Rico are authorized by the incidental powers clause of the FCUA to offer IRAs created under PRITA. But, the authority must be equally narrow as that granted to FCUs offering IRA trust services in the United States. That is, the initial contribution to the plan must be made to a share or share certificate account, and the FCU may engage only in custodial duties with no exercise of investment discretion or advice. After the initial contribution is made to a share account, members must direct any subsequent transfer of the funds at their own risk.

The NCUA Board has further found that, for insurance purposes, PRITA–IRAs will be treated like IRAs created in the United States. The present vested ascertainable interest of the participant will be insured up to $100,000 separately from other accounts of the participant or designated beneficiary.

Medical Savings Accounts

In the future, the NCUA Board may consider a further amendment of part 724 to authorize FCUs to serve as trustees for medical savings accounts (MSAs). An MSA is another type of tax-deferred product which requires limited trustee services, similar to those required for an IRA. The Internal Revenue Service (IRS) is currently conducting a pilot program to permit financial institutions, including credit unions, to offer MSAs. On February 20, 1998, NCUA issued Letter to Credit Unions No. 98–CU–5, which stated that NCUA considered MSAs to be insured member accounts, but that FCUs could not act as an MSA custodian or trustee. The IRS pilot program will be completed in 2000, and it is possible in the near future legislation authorizing it on a permanent basis may be adopted. If and when the full contours of a permanent MSA program are announced, the NCUA Board will determine whether it will make any additional amendments to the regulations.

Regulatory Procedures

Paperwork Reduction Act

This regulation, if adopted, will impose no additional information collection, reporting or record keeping requirements.

Regulatory Flexibility Act

Pursuant to section 605(b) of the Regulatory Flexibility Act (RFA) (5 U.S.C. 605(b)), NCUA certifies that this

proposed rule will not have a significant economic impact on a substantial number of small entities. NCUA expects that this proposal will not: (1) have significant secondary or incidental effects on a substantial number of small entities; or (2) create any additional burden on small entities. These conclusions are based on the fact that the proposed regulations merely extend the authority to offer a service to members. Accordingly, a regulatory flexibility analysis is not required.

Executive Order 12612

This regulation, if adopted, will only apply to federal credit unions.

Agency Regulatory Goal

NCUA's goal is to promulgate clear and understandable regulations that impose minimal regulatory burden. We request your comments on whether the proposed amendment is understandable and minimally intrusive if implemented as proposed.

List of Subjects

12 CFR Part 724

Credit unions, Pensions, Trusts and trustees.

12 CFR Part 745

Credit unions, Pensions, Share insurance, Trusts and trustees.

By the National Credit Union Administration Board on October 6, 1999.

Becky Baker,

Secretary of the Board.

For the reasons set out in the preamble, the NCUA proposes to amend 12 CFR chapter VII to read as follows:

PART 724—TRUSTEES AND CUSTODIANS OF PENSION PLANS

1. The authority citation for part 724 continues to read as follows:

Authority: 12 U.S.C. 1757, 1765, 1766 and 1787.

2. In § 724.1, remove the first sentence and add two sentences in its place to read as follows:

§ 724.1 Federal credit unions acting as trustees and custodians of pension and retirement plans.

A federal credit union is authorized to act as trustee or custodian, and may receive reasonable compensation for so acting, under any written trust instrument or custodial agreement created or organized in the United States and forming part of a pension or retirement plan which qualifies or qualified for specific tax treatment under sections 401(d), 408, 408A and 530 of the Internal Revenue Code (26 U.S.C. 401(d), 408, 408A and 530), for its members or groups of members, provided the funds of such plans are invested in share accounts or share certificate accounts of the federal credit union. Federal credit unions located in a territory, including the trust territories, or a possession of the United States, or the Commonwealth of Puerto Rico, are also authorized to act as trustee or custodian for such plans, if authorized under sections 401(d), 408, 408A and 530 of the Internal Revenue Code as applied to the territory or possession or under similar provisions of territorial law. * * *

PART 745—SHARE INSURANCE AND APPENDIX

3. The authority citation for part 745 continues to read as follows:

Authority: 12 U.S.C. 1752(5), 1757, 1765, 1766, 1781, 1782, 1787, 1789.

4. Amend § 745.9–2 by revising the first sentence of paragraph (a) to read as follows:

§ 745.9–2 IRA/Keogh accounts.

(a) The present vested ascertainable interest of a participant or designated beneficiary in a trust or custodial account maintained pursuant to a pension or profit-sharing plan described under section 401(d) (Keogh account) or sections 408(a), 408A or 530 (IRA) of the Internal Revenue Code or similar provisions of law applicable to a U.S. territory or possession, will be insured up to $100,000 separately from other accounts of the participant or designated beneficiary. * * *

* * * * *

[FR Doc. 99–26754 Filed 10–14–99; 8:45 am]

BILLING CODE 7535–01–P

SMALL BUSINESS ADMINISTRATION

13 CFR Part 121

Small Business Size Standards; Help Supply Services

AGENCY: Small Business Administration.

ACTION: Proposed rule.

SUMMARY: The Small Business Administration (SBA) proposes a size standard of $10 million in average annual receipts for Help Supply Services—Standard Industrial Classification (SIC) 7363. The current size standard for this industry is $5 million. SBA proposes this revision to better define the size of business in this industry that SBA believes should be eligible for Federal small business assistance programs. SBA also proposes clarifying language in the small business size regulations about affiliation when a Professional Employer Organization (PEO) is co-employer of a firm's employees.

DATES: Submit comments on or before December 14, 1999.

ADDRESSES: Send comments to Gary M. Jackson, Assistant Administrator for Size Standards, 409 3rd Street, S.W., Mail Code 6880, Washington D.C. 20416. SBA will make all public comments available to any person or entity upon request.

FOR FURTHER INFORMATION CONTACT: Patricia B. Holden, Office of Size Standards, (202) 205–6618 or (202) 205–6385.

SUPPLEMENTARY INFORMATION: SBA received requests from the public to review the size standard for the Help Supply Services industry (SIC 7363). These requests express concern that the size standard has not kept pace with the rapid growth in the industry due in part to the trends of outsourcing and downsizing. The industry has changed in two ways; help supply firms are larger and they are providing a wider range of personnel to businesses. One request also urged SBA to allow help supply firms to exclude funds collected for and remitted to unaffiliated third parties from gross receipts, as is currently done for travel agents, real estate agents, and others, since 60 percent to 85 percent of revenues on many Federal contracts are ''passed through'' to a firm's employees or associates.

The current size standard for this industry, $5 million, is based on gross billings including funds paid to employees (sometimes referred to as ''associates''). Based on a review of industry data, SBA proposes increasing the size standard for the Help Supply Services industry to $10 million in average annual receipts. SBA does not propose a change to the way average annual receipts are calculated for firms in the Help Supply Services Industry (SIC code 7363). Under SBA's size regulations (13 CFR 121.104), the size of a firm for a receipts-based size standard is based on information reported on a firm's Federal tax returns. Generally, receipts reported to the Internal Revenue Service (IRS) include a firm's gross receipts or sales from provision of goods or services. As explained below, SBA evaluated this issue and disagrees that these types of receipts should be excluded from the calculation of size for firms in this industry. Accordingly, the following discussion explains the reasons for the proposed revision.

Calculation of Average Annual Receipts

Although SBA reviews requests to exclude receipts of certain business activities on a case-by-case basis, the structure of the reviews is consistent with past proposed rules on this issue (see, *e.g.*, advertising agencies, 57 FR 38452, and conference management planners, 60 FR 57982). The reviews identify and evaluate five industry characteristics under which it might be appropriate to exclude certain funds received and later transmitted to an unaffiliated third party:

1. Does a broker or agent-like relationship exist between a firm and a third party provider and is that relationship a dominant or crucial activity of firms in the industry?
2. Are the pass-through funds associated with the broker or agent-like relationship a significant portion of the firm's total receipts?
3. Consistent with the normal business practice of firms in the industry, after the pass-through funds are remitted to a third party, is the firm's remaining income typically derived from a standard commission or fee?
4. Do firms in this industry usually consider billings that are reimbursed to other firms as their own income, or do they prefer to count only receipts that are retained for their own use?
5. Do Federal Government agencies, which engage in the collection of statistics, and other industry analysts typically report receipts of the industry firms on an adjusted receipts basis?

SBA's review of information obtained on the Help Supply Services industry finds that these characteristics do not exist in the industry. Therefore, an assessment of these characteristics does not support the proposal to exclude funds received in trust for unaffiliated third parties from the calculation of a Help Supply Services firm's receipts-size. The following discussion summarizes these findings.

1. No Agent-Like Relationship

The Standard Industrial Classification Manual (1987) states that this industry encompasses ''establishments primarily engaged in supplying temporary or continuing help on a contract or fee basis. The help supplied is always on the payroll of the supplying establishments, but is under the direct or general supervision of the business to whom the help is furnished.'' (See SIC 7363, page 364.) Types of establishments include employee leasing service, fashion show model supply services, help supply services, modeling services, and temporary help services. These firms do not act as agents, but as employers. Some firms even provide health and 401K plans. Their employees are not unaffiliated third parties. Therefore, the dominant activity in this industry is not carried out in a broker or agent-like relationship.

2. Pass-Through Funds Are Not a Significant Portion of Total Receipts

It is common practice in the industry for the Help Supply Services firm to include sufficient funds in a contract to pay the salaries of the workers provided. These funds are then, indeed, passed through to the workers just as any firm providing any other product charges enough to cover the cost of labor. But these funds are not held ''in trust;'' instead, they are the firm's own funds. How the supplying firm acquires and pays for labor is a business decision. Size standards should not be constructed to favor one labor arrangement over another. This issue often arises when part of a contract is subcontracted. The contractor has the option of employing enough workers to do the task and chooses not to do so. Funds which are temporarily held in trust by a firm for remittance to a airline, government agency, or home seller are different in several respects, including the fact that the firm does not have the option/business decision of whether or not the home seller, airline, or government agency will be an employee or a subcontractor. It is true (and not unusual) that the funds which are reported to be ''passed through'' to the associates constitute the majority of the contract revenue. Labor costs in most industries are the largest cost. The size of the labor costs relative to the total billing is not a reason to exclude them from calculation of gross revenues.

3. Remaining Income Is Not Derived From Standard Commission or Fee

Real estate agents, travel agents, advertising agencies, and conference planners derive their gross income from commissions and fees, whereas most firms derive their gross income from pricing their products. Both types of industries must then pay labor costs. SBA is not aware of any commissions or fees that are standard in the Help Supply Services industry. Contracts with and bills to the help supply firms usually reflect charges for labor and overhead. Overhead, like wages, varies for many reasons, including the types of benefits firms provide their employees and efficiency of operation. Without such an industry standard or practice, it would be impossible to implement a size standard based on a firm's adjusted gross revenue from fees or commissions. By contrast, in the travel industry, if the bookings are $1 million, then it can be inferred that the adjusted gross income to the firm is $100,000 because the industry commission and fee structure is standard and well-known.

4. Firms in This Industry Usually Consider Billings as Gross Income

Firms in the Help Supply Services industry consider funds collected as their own funds even though they face substantial labor costs. The help supply firm is the one who hires and fires the employee, negotiating their wages and benefits in the process. Their labor costs are reflected in their bids to supply labor. The funds the help supply firm receives to cover labor costs are fundamentally different from funds received by a real estate agent which must be put into an escrow account, and are never considered the real estate firm's funds. In fact, the real estate firm would face substantial penalties if the funds are co-mingled with its own funds. Not only is the payment structure different, the relationship is different in the two industries. In principal-agent relationships, the agent must, by law, act in a fiduciary capacity for the principal. SBA is not aware of any practice or requirement that help supply firms must act as fiduciary for the firm to which it supplies labor.

5. Federal Agencies and Industry Analysts Typically Do Not Represent Receipts of These Firms on an Adjusted Receipts Basis

Finally, data from the U.S. Bureau of the Census (Census Bureau) on this industry, upon which that SBA evaluates size standards, shows firm receipts based on gross revenue, not commission or fee. The survey form used by the Census Bureau (SV 7306) when surveying Help Supply Services firms does not specifically instruct them to report only agency or brokerage commissions or fees as it does on Form UT 4700, page 2, items 1 & 2 (used to survey firms that arrange transportation of freight and cargo and ''Freight Forwarding (net)'').

Thus, the Census Bureau recognizes that the normal arrangement in this industry is to treat all revenue as gross income irrespective of labor costs. Similarly, the credit reporting firm of Dun and Bradstreet also reports receipts for firms in this industry by gross billings less any discounts or refunds.

None of the five factors support treating the Help Supply Services industry like the industries that operate as agents, such as a travel or real estate agency. In fact, evaluation of the factors

strongly supports using gross revenue as the basis for the size standard. Based on the findings discussed above, SBA believes it is appropriate to continue to include all amounts collected on Help Supply Services contracts when calculating receipts.

Size Standard for the Help Supply Services

Based on requests received from the public, SBA believes it is appropriate to re-evaluate the size standard to see what, if any, changes in the industry have occurred since the size standard of $5 million was established. Based on that evaluation, SBA proposes a $10 million size standard for this industry. The following discussion describes SBA's size standards methodology and the evaluation of data on the Help Supply Services industry supporting a revision to the current size standard.

Size Standards Methodology

Congress granted SBA discretion to establish detailed size standards. SBA generally considers four categories for establishing and evaluating size standards:

1. The structure of the industry and its various economic characteristics;
2. SBA program objectives and the impact of different size standards on these programs;
3. Whether a size standard successfully excludes those businesses which are dominant in the industry; and
4. Other factors if applicable.

Other factors may come to SBA's attention during the public comment period or from SBA's own research on the industry. The reason SBA has not adopted a general formula or uniform weighting system is to ensure that the factors will be evaluated in context of a specific industry. Below is a discussion of SBA's analysis of the economic characteristics of an industry, the impact of a size standard on SBA programs, and the evaluation of whether a firm at or below a size standard could be considered dominant in the industry.

Industry Analysis

Paragraphs (a) and (b) of 13 CFR 121.102 list evaluation factors which are the primary factors describing the structural characteristics of an industry—average firm size, distribution of firms by size, start-up costs and entry barriers, and degree of industry competition. While these evaluation factors are generally considered the most important indicators of industry structure, SBA will consider and evaluate all relevant information that is helpful in assessing an industry's size standard. Below is a brief description of the industry structure evaluation characteristics.

1. *Average firm size* is simply total industry revenues (or number of employees) divided by the total number of firms. If an industry has an average firm size significantly higher than the average firm size of a group of comparative industries (in this case, industries with the anchor size standard of $5 million in receipts), this fact may support establishing a higher size standard than the one in effect for the group of related industries. Conversely, data showing an industry with a significantly lower average firm size relative to the related group of industries tends to support a lower size standard.

2. The *distribution of firms* by size examines the proportion of industry sales, employment, or other economic activity accounted for by firms of different sizes within an industry. If the majority of an industry's output comes from large firms, this would tend to support a higher size standard than the anchor. The opposite is true for an industry in which the distribution of firms by size indicates that output is concentrated among the smaller firms in an industry.

3. *Start-up costs* affect a firm's initial size because entrants into an industry must have sufficient capital to start a viable business. To the extent that firms in an industry have greater start-up capital requirements than firms in other industries, SBA is justified in considering a higher size standard. As a proxy measure for start-up costs, SBA examines the average level of assets for firms in an industry. An industry with a relatively high level of average assets per firm as compared with the average assets per firm of the group of comparative industries with a $5 million size standard is likely to be a capital intensive industry in which start-up costs tend to be higher for firms entering the industry. For those types of industries, that circumstance may support the need for a relatively higher size standard than the anchor size standard.

4. SBA assesses the *degree of industry competition* by measuring the proportion or share of industry sales obtained by firms above a relatively large firm size. In this proposed rule, SBA analyzes the proportion of industry sales generated by the four largest firms in an industry—generally referred to as the ''four-firm concentration ratio.'' If a significant proportion of revenue from sales within an industry is concentrated among a few relatively large producers, SBA tends to set a higher size standard to assist a broader range of firms to compete with firms that are clearly dominant in the industry. If this factor shows the industry to be highly competitive, SBA tends to apply the anchor.

5. *Competition for Federal procurements and SBA financial assistance.* SBA also evaluates the impact of a size standard on its programs and other applications of size standards to determine whether small businesses defined under the existing size standard are receiving a reasonable level of assistance. This assessment mainly focuses on the proportion or share of Federal contract dollars awarded to small businesses. In general, the lower the share of Federal contract dollars awarded to small businesses in an industry which receives significant Federal procurement revenues, the greater the justification for a size standard higher than the existing one.

Another factor SBA considers when evaluating the impact of a proposed size standard on SBA programs is the volume of guaranteed loans within an industry and the size of firms in that industry obtaining loans in SBA's financial assistance programs. SBA considers this factor when determining whether or not the current size standard may inappropriately restrict the level of financial assistance to firms in that industry. If small businesses receive ample assistance through these programs, a change to the size standard (especially if it is already above the anchor size) may not be appropriate.

SBA established a size standard of 500 employees for the manufacturing and mining industries at SBA's inception in 1953. Shortly thereafter, SBA established a $1 million size standard for the nonmanufacturing industries. These two size standards are generally referred to as ''a base or anchor size standards.'' The revenue-based size standards were adjusted for inflation so that, currently, the anchor size for the nonmanufacturing industries is $5 million.

If the structural characteristics of an industry are significantly different from the average characteristics of industries with the anchor size standard, a size standard higher or, in rare cases, lower than the anchor size standard may be supportable. Only when all or most of the industry data are significantly smaller than the average characteristics of the anchor group industries, or other industry considerations suggest the anchor standard is an unreasonably high size standard, will SBA adopt a size standard below the anchor size standard.

Excluding agriculture and subsistence categories, which generally have size

standards established by statute, only seven industries in the revenue-based size standards are below the $5 million anchor. None in the manufacturing or mining industries is below the 500 employee-based size standards.

For the Help Supply Services industry under review in this proposed rule, SBA begins by comparing the characteristics of the five evaluation factors for this industry to the average characteristics of the nonmanufacturing industries which have the anchor size standard of $5 million (hereafter referred to as the nonmanufacturing anchor group). If the characteristics of the industry are similar to the average characteristics of the nonmanufacturing anchor group, then the anchor size standard of $5 million is considered an appropriate size standard for that industry. If, however, the industry characteristics significantly differ from the average characteristics of the nonmanufacturing anchor group, then a size standard above or below $5 million may be appropriate.

Evaluation of Industry Size Standard

SBA analyzed the size standard for the Help Supply Services industry by comparing the industry's characteristics with the average characteristics of the nonmanufacturing anchor group discussed above. SBA examined economic data on the industry using:

- A special tabulation of the 1992 Economic Census prepared on contract by the U.S. Bureau of the Census;
- Asset data from Dun and Bradstreet's 1998 Industry Norms and Key Business Ratios;
- Federal contract award data for fiscal years 1997 and 1998 from the U.S. General Services Administration's Federal Procurement Data Center; and
- 7(a) Business Loans from SBA's database.

The table below shows the characteristics for the Help Supply Services industry compared to the average characteristics for the nonmanufacturing anchor group. A review of these factors leads to a proposed size standard of $10 million for this industry.

INDUSTRY CHARACTERISTICS OF SIC 7363 COMPARED TO THE NONMANUFACTURING ANCHOR GROUP

Category	Average firm size ($ mil.)	Percent of industry sales by firms of			Average assets per firm ($ mil.)	Four-firm concentration ratio	Percent of gov't procurement dollars to small business
		<$5Mil.	<$10Mil.	<$25Mil.			
Nonmanufacturing Anchor Group	$0.85	51.0	61.0	67.0	$0.5	15.0	21.0
Help Supply Services Industry	2.98	26.3	37.2	52.0	0.56	11.1	10.7

The average firm size in the Help Supply Services industry is more than three times larger than the average firm size of the nonmanufacturing anchor group. This shows that firms in the Help Supply Services industry tend to be much larger in size than firms in other non-manufacturing anchor group and supports a size standard at least $10 million.

The distribution of sales by firm size also supports a size standard for this industry at least $10 million. Under this factor, the proportion of industry sales obtained by firms of $5 million and less in sales, $10 million and less in sales, and $25 million and less in sales is much smaller than that of firms of the same size class found for the anchor nonmanufacturing group.

The average assets per firm show that the industry is capital intensive, similar to the industries in the anchor group, and thus, would support a size standard at the anchor of $5 million. However, the average assets per firm is not substantially different from the anchor group and so would not by itself support a standard higher than the present $5 million standard.

The four-firm concentration ratio likewise is similar to, but slightly less than, the anchor group characteristic size standard—no higher than $5 million. The four-firm concentration ratio shows that the four largest firms in the Help Supply Services industry account for only 11 percent of the industry revenues, while the four largest-firms in the nonmanufacturing anchor group account for 15 percent. This factor shows the industry is already highly competitive.

If a few large firms were controlling a large portion of the industry revenues, then raising the size standard above the anchor size standard might help smaller firms compete. However, when the industry is already competitive, as this one is, nothing would be gained in competitiveness by lowering the size standard. Therefore, we conclude that the four-firm concentration ratio does not support a standard either higher or lower than the anchor.

Purpose of and Impact on SBA Programs

The percent of Federal contract dollars awarded to small firms in the Help Supply Services industry during fiscal years 1997 and 1998 is about half as large as the share of Federal contracting going to small firms within the non-manufacturing anchor group. This supports an increase to the current size standard. In fiscal years 1997 and 1998, of the 1,049 actions reported by the Federal Procurement Data System, 645 (61 percent) went to small firms. While the 645 actions were 61 percent of the total actions, they were only 10.7 percent of the total contract dollars awarded when the two years are combined. This industry is lagging behind those in the anchor group.

Also, an increase to the size standard for this industry appears reasonable based on the distribution of SBA guaranteed loans under the 7(a) program. In fiscal years 1994 through 1998, small businesses in the Help Supply Services industry received a total of 229 loans which averaged $116,800. The number of 7(a) loans to this industry has taken a downward trend in recent years, from 81 in FY 1995 to 25 in FY 1998. The total dollar value has also declined during that time, from $6,951,029 to $2,651,687. As in Federal procurement, the potential exists to increase 7(a) loans going to this industry. Both the level of participation in this program and the trend would support a $10 million size standard as one providing a reasonable level of assistance to small businesses in this industry.

Considering these industry structure factors and the impact on SBA programs in the aggregate, SBA believes that the $10 million size standard is reasonable and would provide assistance to firms we believe should be eligible as small business for this industry. Three of the industry factors support a size standard higher than the non-manufacturing anchor group and two industry factors

support a size standard at the anchor size standard.

Dominant in Field of Operation

Section 3(a) of the Small Business Act defines a small concern as one that is independently owned and operated, not dominant in its field of operation, and within detailed definitions or standards established by the SBA Administrator. As part of its evaluation of a size standard, SBA considers whether a business concern at or below a recommended size standard would be considered dominant in its field of operation. This assessment generally considers the market share of firms at a proposed size standard as well as other factors that may reveal if a firm can exercise a major controlling influence on a national basis in which significant numbers of business concerns are engaged.

SBA has determined that at the recommended size standard of $10 million, no firm at or below those levels would be of a sufficient size to be dominant in its field of operation. Firms at the proposed size standard generate less than .02 percent of total industry sales. This level of market share effectively precludes any firm from exerting a controlling effect on the industry.

SBA also proposes to add clarifying language to § 121.103(b)(4). Paragraph (b) discusses exclusions from affiliation rules while paragraph (b)(4) specifically excludes business concerns that lease employees. We propose to insert Professional Employee Organizations (PEOs) in this section along with leasing companies. Their relationship with the firms to whom they provide employees and staffing services are similar, yet questions arise from time-to-time because PEOs were not specifically mentioned in the exclusion. SBA will not find a firm affiliated with a leasing company or PEO merely because it uses the services of a leasing company or PEO. However, SBA might find affiliation based on other conditions.

Nothing in the clarification of the exclusions to the affiliation rule is intended to change the way a firm must count its employees when determining size. All employees must be counted; whether permanent, part-time, temporary, leased or covered by a contract with a PEO. How a firm obtains its staffing is a business decision, and size standards are not intended to influence its decision in that regard.

Alternative Size Standards

SBA considered two alternative size standards for this industry. One alternative considered was modifying the average annual receipts method to allow for pass-through funds received for employees (sometimes referred to as ''associates''). SBA rejected this alternative because the industry characteristics are not similar to those industries which obtain gross revenues from commissions and fees. None of the five factors used in this evaluation supported making that change.

Also, since not all the factors supported the same size standard, but rather indicated a range of possible size standards, a second alternative considered was to select one of the other sizes from the range, either somewhat higher or lower than the one proposed. On balance, and given the characteristics of the industry, SBA considers $10 million the best interpretation of the data and the most supportable standard for this industry.

SBA welcomes comments on the proposed size standard for Help Supply Services. If the public can show compelling reasons why a different size standard for this industry should be established or that it should weigh one factor higher or lower, SBA will consider these reasons when developing the final rule. SBA would also appreciate comments on its position that it should measure the receipts size of a Help Supply Services firm on gross receipts.

Compliance With Executive Orders 12612, 12988, and 12866, the Regulatory Flexibility Act (5 U.S.C. 601–612), and the Paperwork Reduction Act (44 U.S.C. 3501 *et seq.*)

SBA certifies that this rule, if adopted, would not be a significant rule within the meaning of Executive Order 12866 since it will not have an impact of $100 million or more. The total amount of Federal procurement and SBA guaranteed loans combined is less than $160 million to this industry annually, and a change to the size standard is unlikely to significantly affect these programs.

For purposes of the Regulatory Flexibility Act, this rule would not have a substantial impact on a significant number of small entities. Although potentially 576 additional firms could gain small business status as a result of this rule, only a very small percentage of firms in the industry compete for Federal procurements or obtain guaranteed loans through SBA's financial assistance programs.

For the purpose of the Paperwork Reduction Act, 44 U.S.C. 3501 *et seq.*, SBA certifies that this rule would not impose new reporting or recordkeeping requirements other than those already required of SBA.

For purposes of Executive Order 12612, SBA certifies that this rule does not have any federalism implications warranting the preparation of a Federalism Assessment.

For purposes of Executive Order 12988, SBA certifies that this rule is drafted, to the extent practicable, in accordance with the standards set forth in that order.

List of Subjects in 13 CFR Part 121

Government procurement, Government property, Grant programs—business, Loan programs—business, Small businesses.

For reasons stated in the preamble, SBA proposes to amend 13 CFR part 121 as follows:

PART 121—SMALL BUSINESS SIZE REGULATIONS

1. The authority citation for part 121 continues to read as follows:

Authority: 15 U.S.C. 632(a), 634(b)(6), 637(a), 644(c) and 662(5).

2. In § 121.103, revise paragraph (b)(4), to read as follows:

§ 121.103 What is affiliation?

* * * * *

(b) * * *

(4) Business concerns that lease employees from concerns primarily engaged in leasing employees to other businesses or that enter into a co-employer arrangement with a Professional Employer Organization (PEO) are not affiliated with the leasing company or PEO solely on the basis of a leasing agreement.

* * * * *

3. In § 121.201, under the DIVISION I—SERVICES heading of the ''SIZE STANDARDS BY SIC INDUSTRY'' table, add a new entry for SIC Code 7363 in numerical order to read as follows:

§ 121.201 What size standards has SBA identified by Standard Industrial Classification codes?

* * * * *

SIZE STANDARDS BY SIC INDUSTRY

SIC code and description	Size standards in number of employees or millions of dollars
* * * * *	
DIVISION I—SERVICES	$5.0
EXCEPT:	
* * * * *	
7363 Help Supply Services ..	$10.0

SIZE STANDARDS BY SIC INDUSTRY—Continued

SIC code and description	Size standards in number of employees or millions of dollars
* * * * *	

Dated: October 7, 1999.

Aida Alvarez,

Administrator.

[FR Doc. 99–26783 Filed 10–14–99; 8:45 am]

BILLING CODE 8025–01–P

DEPARTMENT OF THE INTERIOR

Bureau of Indian Affairs

25 CFR Part 151

RIN: 1076–AD90

Acquisition of Title to Land in Trust

AGENCY: Bureau of Indian Affairs, Interior.

ACTION: Proposed rule; Reopening of comment period.

SUMMARY: This notice reopens the comment period for the proposed rule published at 64 FR 17574–17588, April 12, 1999 on the Acquisition of title to land in trust.

DATES: Comments must be received on or before November 12, 1999.

ADDRESSES: You may mail comments to the Office of Trust Responsibilities, Bureau of Indian Affairs, 1849 C Street, NW, MS–4513–MIB, Washington, DC 20240.

FOR FURTHER INFORMATION CONTACT: Terry Virden, Director, Office of Trust Responsibilities, Bureau of Indian Affairs, MS–4513, Main Interior Building, 1849 C Street, NW, Washington, DC 20240; by telephone at (202) 208–5831; or by telefax at (202) 219–1065.

SUPPLEMENTARY INFORMATION: On Monday, April 12, 1999, the Bureau of Indian Affairs published a proposed rule, 64 FR 17574–17588, concerning the Acquisition of title to land in trust. The deadline for receipt of comments was July 12, 1999, which was extended to October 12, 1999. The comment period is reopened for an additional thirty days to allow additional time for comment on the proposed rule. Comments must be received on or before November 12, 1999.

Dated: October 12, 1999.

Kevin Gover,

Assistant Secretary—Indian Affairs.

[FR Doc. 99–27024 Filed 10–14–99; 8:45 am]

BILLING CODE 4310–02–P

DEPARTMENT OF THE INTERIOR

Office of Surface Mining Reclamation and Enforcement

30 CFR Part 901

[SPATS No. AL–070–FOR]

Alabama Regulatory Program

AGENCY: Office of Surface Mining Reclamation and Enforcement, Interior.

ACTION: Proposed rule; reopening and extension of public comment period on proposed amendment.

SUMMARY: The Office of Surface Mining Reclamation and Enforcement (OSM) is reopening and extending the public comment period for the proposed rule published on September 7, 1999 (64 FR 48573). The comment period originally closed October 7, 1999. We are reopening and extending the comment period because the citizens of Alabama have shown a high level of interest in the revisions proposed by Alabama.

DATES: We will accept written comments until 4:00 p.m., c.s.t., November 1, 1999.

ADDRESSES: You should mail or hand deliver written comments to Arthur W. Abbs, Director, Birmingham Field Office at the address listed below.

You may review copies of the Alabama program, the amendment, and all written comments received in response to this document at the addresses listed below during normal business hours, Monday through Friday, excluding holidays. You may receive one free copy of the amendment by contacting OSM's Birmingham Field Office.

Arthur W. Abbs, Director, Birmingham Field Office, Office of Surface Mining, 135 Gemini Circle, Suite 215, Homewood, Alabama 35209, Telephone: (205) 290–7282.

Alabama Surface Mining Commission, 1811 Second Avenue, P.O. Box 2390, Jasper, Alabama 35502–2390, Telephone (205) 221–4130.

FOR FURTHER INFORMATION CONTACT: Arthur W. Abbs, Director, Birmingham Field Office. Telephone: (205) 290–7282. Internet: aabbs@balgw.osmre.gov.

SUPPLEMENTARY INFORMATION:

I. Background on the Alabama Program

On May 20, 1982, the Secretary of the Interior conditionally approved the Alabama program. You can find background information on the Alabama program, including the Secretary's findings, the disposition of comments, and the conditions of approval in the May 20, 1982, **Federal Register** (47 FR 22062). You can find later actions on the Alabama program at 30 CFR 901.15 and 901.16.

II. Discussion of the Proposed Amendment

Due to the high level of interest in this amendment, we are reopening and extending the public comment period for the proposed rule published on September 7, 1999 (64 FR 48573). In this amendment, Alabama proposed revisions to statutes concerning the repair or compensation for material damage caused by subsidence, resulting from underground coal mining operations, to any occupied residential dwelling and related structures or any noncommercial building. Alabama proposed to revise its program at its own initiative.

III. Public Comment Procedures

We are reopening the comment period on the proposed Alabama program amendment to provide you an opportunity to comment on the adequacy of the amendment. Under the provisions of 30 CFR 732.17(h), we are requesting comments on whether the amendment satisfies the program approval criteria of 30 CFR 732.15. If we approve the amendment, it will become part of the Alabama program.

Written Comments

We will make comments, including names and addresses of respondents, available for public review during normal business hours. We will not consider anonymous comments. If individual respondents request confidentiality, we will honor their request to the extent allowable by law. Individual respondents who wish to withhold their name or address from public review, except for the city or town, must state this prominently at the beginning of their comments. We will make all submissions from organizations or businesses, and from individuals identifying themselves as representatives or officials of organizations or businesses, available for public review in their entirety.

Your written comments should be specific and pertain only to the issues proposed in this rulemaking. You should explain the reason for any recommended change. In the final rulemaking, we will not necessarily consider or include in the Administrative Record any comments

received after the time indicated under **DATES** or at locations other than the Birmingham Field Office.

Please submit Internet comments as an ASCII file avoiding the use of special characters and any form of encryption. Please also include ''Attn: SPATS No. AL–070–FOR'' and your name and return address in your Internet message. If you do not receive a confirmation that we have received your Internet message, contact the Birmingham Field Office at (205) 290–7282.

IV. Procedural Determinations

Executive Order 12866

The Office of Management and Budget (OMB) exempts this rule from review under Executive Order 12866 (Regulatory Planning and Review).

Executive Order 12988

The Department of the Interior has conducted the reviews required by section 3 of Executive Order 12988 (Civil Justice Reform) and has determined that, to the extent allowed by law, this rule meets the applicable standards of subsections (a) and (b) of that section. However, these standards are not applicable to the actual language of State regulatory programs and program amendments since each program is drafted and published by a specific State, not by OSM. Under sections 503 and 505 of SMCRA (30 U.S.C. 1253 and 1255) and 30 CFR 730.11, 732.15, and 732.17(h)(10), decisions on State regulatory programs and program amendments must be based solely on a determination of whether the submittal is consistent with SMCRA and its implementing Federal regulations and whether the other requirements of 30 CFR Parts 730, 731, and 732 have been met.

National Environmental Policy Act

This rule does not require an environmental impact statement since section 702(d) of SMCRA (30 U.S.C. 1292(d)) provides that agency decisions on State regulatory program provisions do not constitute major Federal actions within the meaning of section 102(2)(C) of the National Environmental Policy Act (42 U.S.C. 4332(2)(C)).

Paperwork Reduction Act

This rule does not contain information collection requirements that require approval by OMB under the Paperwork Reduction Act (44 U.S.C. 3507 *et seq.*).

Regulatory Flexibility Act

The Department of the Interior has determined that this rule will not have a significant economic impact on a substantial number of small entities under the Regulatory Flexibility Act (5 U.S.C. 601 *et seq.*). The State submittal which is the subject of this rule is based upon corresponding Federal regulations for which an economic analysis was prepared and certification made that such regulations would not have a significant economic effect upon a substantial number of small entities. Therefore, this rule will ensure that existing requirements previously published by OSM will be implemented by the State. In making the determination as to whether this rule would have a significant economic impact, the Department relied upon the data and assumptions for the corresponding Federal regulations.

Unfunded Mandates

OSM has determined and certifies under the Unfunded Mandates Reform Act (2 U.S.C. 1502 *et seq.*) that this rule will not impose a cost of $100 million or more in any given year on local, state, or tribal governments or private entities.

List of Subjects in 30 CFR Part 901

Intergovernmental relations, Surface mining, Underground mining.

Dated: October 8, 1999.

Ervin J. Barchenger,

Acting Regional Director, Mid-Continent Regional Coordinating Center.

[FR Doc. 99–27002 Filed 10–14–99; 8:45 am]

BILLING CODE 4310–05–P

ENVIRONMENTAL PROTECTION AGENCY

40 CFR Part 52

[NC–083–1–9938b; FRL–6453–7]

Approval and Promulgation of Implementation Plans: Approval of Revisions to the North Carolina State Implementation Plan

AGENCY: Environmental Protection Agency (EPA).

ACTION: Proposed rule.

SUMMARY: The EPA proposes to approve the State Implementation Plan (SIP) revisions submitted by the State of North Carolina on March 19, 1997. These revisions amend cross-references, incorporate the latest edition of the Code of Federal Regulations for prevention of significant deterioration (PSD), and change the mechanism and procedures for activating reasonably available control technology rules for volatile organic compounds (VOCs) and nitrogen oxides (NO_X). In the Rules section of this **Federal Register**, the EPA is approving the State's SIP revision as a direct final rule without prior proposal because the Agency views this as a noncontroversial submittal and anticipates no adverse comments. A detailed rationale for the approval is set forth in the direct final rule. If no adverse comments are received in response to this action, no further activity is contemplated. If EPA receives adverse comments, the direct final rule will be withdrawn and all public comments received will be addressed in a subsequent final rule based on this proposed rule. The EPA will not institute a second comment period on this document. Any parties interested in commenting on this document should do so at this time.

DATES: Written comments must be received on or before November 15, 1999.

ADDRESSES: All comments should be addressed to: Gregory Crawford at the EPA, Region 4 Air Planning Branch, 61 Forsyth Street, SW, Atlanta, Georgia 30303. Copies of the state submittal(s) are available at the following addresses for inspection during normal business hours:

Air and Radiation Docket and Information Center (Air Docket 6102), U.S. Environmental Protection Agency, 401 M Street, SW, Washington, DC 20460.

Environmental Protection Agency, Region 4, Air Planning Branch, 61 Forsyth Street, SW, Atlanta, Georgia 30303–8960.

North Carolina Department of Environment and Natural Resources, Division of Air Quality, 1641 Mail Service Center, Raleigh, North Carolina 27699.

FOR FURTHER INFORMATION CONTACT: Gregory Crawford at 404/562–9046.

SUPPLEMENTARY INFORMATION: For additional information see the direct final rule which is published in the Rules section of this **Federal Register**.

Dated: September 23, 1999.

A. Stanley Meiburg,

Acting Regional Administrator, Region 4.

[FR Doc. 99–26194 Filed 10–14–99; 8:45 am]

BILLING CODE 6560–50–U

ENVIRONMENTAL PROTECTION AGENCY

40 CFR Part 76

[FRL–6455–5]

Acid Rain Program—Nitrogen Oxides Emission Reduction Program, Rule Revision in Response to Court Remand

AGENCY: Environmental Protection Agency.

ACTION: Proposed rule.

SUMMARY: The Environmental Protection Agency (EPA) is proposing to revise the regulations for the Acid Rain Nitrogen Oxides Emission Reduction Program under title IV of the Clean Air Act (Act) in response to a remand by the U.S. Court of Appeals for the District of Columbia Circuit. In December 1996, EPA issued regulations setting nitrogen oxides (NO_X) emission limits for specified types of existing, coal-fired boilers, including cell burner boilers, that are subject to such limits starting in 2000. In February 1998, the Court upheld the regulations except for one provision addressing what boilers qualify as cell burner boilers. The Court vacated and remanded that provision. EPA is revising the regulations, consistent with the Court's decision, to treat, as a cell burner boiler, any boiler subject to the limits starting in 2000, constructed as a cell burner boiler, and converted to the burner configuration of a wall-fired boiler. Under the regulations, a cell burner boiler must meet an annual average NO_X emission limit of 0.68 lb/mmBtu. The NO_X emission limits under title IV will reduce the serious, adverse effects of NO_X emissions on human health, visibility, ecosystems, and materials.

DATES: Written comments on this proposed rule must be received by November 29, 1999.

Public Hearing: Anyone requesting a public hearing must submit a request, which must be received by EPA by no later than October 22, 1999.

ADDRESSES: Comments: Commenters must identify all written comments with the appropriate docket number (Docket No. A–95–28) and must submit them in duplicate to EPA Air Docket Section (6102), Waterside Mall, Room M1500, 1st Floor, 401 M Street, SW, Washington, DC 20460.

Docket: Docket No. A–95–28, containing supporting information used in developing the direct final rule, is available for public inspection and copying between 8:30 a.m. and 3:30 p.m., Monday through Friday, at EPA's Air Docket Section at the above address. EPA may charge a reasonable fee for copying.

FOR FURTHER INFORMATION CONTACT: Dwight C. Alpern, at (202) 564–9151, U.S. Environmental Protection Agency, 401 M Street, SW, Washington, DC 20460; or the Acid Rain Hotline at (202) 564–9089.

SUPPLEMENTARY INFORMATION: We are proposing to revise the provision concerning cell burner boilers in the regulations for the Acid Rain Nitrogen Oxides Emission Reduction Program. In the ''Rules and Regulations'' section of today's **Federal Register**, we are adopting the revision as a direct final rule because we view the revision as noncontroversial and anticipate no adverse comment. We have explained our reasons for the revision in the preamble to the direct final rule. If we receive no timely, adverse comment, we will not take further action on this proposed rule. If we receive timely, adverse comment, we will withdraw the direct final rule and it will not take effect. We will address all public comments in a subsequent final rule based on this proposed rule. We will not institute a second comment period on this action. Any parties interested in commenting must do so at this time.

List of Subjects in 40 CFR Part 76

Environmental protection, Acid rain program, Air pollution control, Electric utilities, Nitrogen oxides.

Dated: October 5, 1999.

Carol M. Browner,

Administrator.

[FR Doc. 99–26659 Filed 10–14–99; 8:45 am]

BILLING CODE 6560–50–P

ENVIRONMENTAL PROTECTION AGENCY

40 CFR Part 261

[SW–FRL–6455–1]

Hazardous Waste Management System; Identification and Listing of Hazardous Waste; Proposed Exclusion

AGENCY: Environmental Protection Agency (EPA).

ACTION: Proposed rule and request for comment.

SUMMARY: The EPA (''the Agency'' or ''we'' in this preamble) is proposing to grant a petition submitted by Rhodia, Incorporated Houston (Rhodia). Rhodia petitioned the Agency to exclude (or delist) filter-cake sludge generated at its Houston, Harris County, Texas, facility from the lists of hazardous wastes contained in 40 CFR 261.24, 261.31, and 261.32 (hereinafter all sectional references are to 40 CFR unless otherwise indicated).

Rhodia submitted this petition under §§ 260.20 and 260.22(a). Section 260.20 allows any person to petition the Administrator to modify or revoke any provision of §§ 260 through 266, 268 and 273. Section 260.22(a) specifically provides generators the opportunity to petition the Administrator to exclude a waste on a ''generator specific'' basis from the hazardous waste lists.

The Agency bases its proposed decision to grant the petition on an evaluation of waste-specific information provided by the petitioner.

If finalized, we would conclude that Rhodia's petitioned waste is nonhazardous with respect to the original listing criteria and that the waste process Rhodia uses will substantially reduce the likelihood of migration of hazardous constituents from this waste. We would also conclude that their process minimizes short-term and long-term threats from the petitioned waste to human health and the environment.

DATES: We will accept comments until November 29, 1999. We will stamp comments postmarked after the close of the comment period as ''late.'' These ''late'' comments may not be considered in formulating a final decision.

Your requests for a hearing must reach EPA by November 1, 1999. The request must contain the information prescribed in § 260.20(d).

ADDRESSES: Please send three copies of your comments. Two copies should be sent to William Gallagher, Delisting Section, Multimedia Planning and Permitting Division (6PD–O), Environmental Protection Agency, 1445 Ross Avenue, Dallas, Texas 75202. A third copy should be sent to the Texas Natural Resources Conservation Commission (TNRCC), P.O. Box 13087, Austin, Texas, 78711–3087. Identify your comments at the top with this regulatory docket number: ''F–99–TXDEL–Rhodia.''

You should address requests for a hearing to the Acting Director, Robert Hannesschlager, Multimedia Planning and Permitting Division (6PD), Environmental Protection Agency, 1445 Ross Avenue, Dallas, Texas 75202.

FOR FURTHER INFORMATION CONTACT: James Harris at (214) 665–8302.

SUPPLEMENTARY INFORMATION:

The information in this section is organized as follows:

I. Overview Information
A. What action is EPA proposing?

B. Why is EPA proposing to approve this delisting?
C. How will Rhodia manage the waste if it is delisted?
D. When would EPA finalize the proposed delisting?
E. How would this action affect States?
II. Background
A. What is the history of the delisting program?
B. What is a delisting petition, and what does it require of a petitioner?
C. What factors must EPA consider in deciding whether to grant a delisting petition?
III. EPA's Evaluation of the Waste Data
A. What waste did Rhodia petition EPA to delist?
B. Who is Rhodia, and what process does it use?
C. How did Rhodia sample and analyze the waste data in this petition?
D. What were the results of Rhodia's analysis?
E. How did EPA evaluate the risk of delisting this waste?
F. What did EPA conclude about Rhodia's analysis?
G. What other factors did EPA consider?
H. What is EPA's final evaluation of this delisting petition?
IV. Next Steps
A. With what conditions must the petitioner comply?
B. What happens if Rhodia violates the terms and conditions?
V. Public Comments
A. How can I, as an interested party, submit comments?
B. How may I review the docket or obtain copies of the proposed exclusion?
VI. Regulatory Impact
VII. Regulatory Flexibility Act
VIII. Paperwork Reduction Act
IX. Unfunded Mandates Reform Act
X. Executive Order 12875
XI. Executive Order 13045
XII. Executive Order 13084
XIII. National Technology Transfer and Advancement Act

I. Overview Information

A. What Action is EPA Proposing?

The EPA is proposing:

(1) To grant Rhodia's petition to have it's filter-cake sludge excluded, or delisted, from the definition of a hazardous waste, subject to certain verification and monitoring conditions; and

(2) To use a fate and transport model to evaluate the potential impact of the petitioned waste on human health and the environment. The Agency uses this model to predict the concentration of hazardous constituents released from the petitioned waste, once it is disposed.

B. Why Is EPA Proposing To Approve This Delisting?

Rhodia's petition requests a delisting for listed hazardous wastes. Rhodia does not believe that the petitioned waste meets the criteria for which EPA listed it. Rhodia also believes no additional constituents or factors could cause the waste to be hazardous. EPA's review of this petition included consideration of the original listing criteria, and the additional factors required by HSWA. See section 222 of HSWA, 42 U.S.C. 6921(f), and 40 CFR 260.22(d)(1)–(4). In making the initial delisting determination, EPA evaluated the petitioned waste against the listing criteria and factors cited in §§ 261.11 (a)(2) and (a)(3). Based on this review, the EPA agrees with the petitioner that the waste is nonhazardous with respect to the original listing criteria. (If the EPA had found, based on this review, that the waste remained hazardous based on the factors for which the waste were originally listed, EPA would have proposed to deny the petition.) The EPA evaluated the waste with respect to other factors or criteria to assess whether there is a reasonable basis to believe that such additional factors could cause the waste to be hazardous. The EPA considered whether the waste is acutely toxic, the concentration of the constituents in the waste, their tendency to migrate and to bioaccumulate, their persistence in the environment once released from the waste, plausible and specific types of management of the petitioned waste, the quantities of waste generated, and waste variability. The EPA believes that the petitioned waste does not meet these criteria. EPA's proposed decision to delist waste from Rhodia's facility is based on the information submitted in support of today's rule, *i.e.*, descriptions of the Sulfuric Acid Regeneration Unit (SARU) and the Advanced Water Treatment (AWT) system and analytical data from the Houston facility.

C. How Will Rhodia Manage the Waste If It Is Delisted?

Rhodia currently disposes of the petitioned waste (filter-cake Sludge) generated at its facility in off-site, RCRA permitted TSD facilities which are not owned/operated by Rhodia. If the waste is delisted it will meet the criteria for disposal in a Subtitle D landfill.

D. When Would EPA Finalize the Proposed Delisting?

The HSWA specifically requires EPA to provide notice and an opportunity for comment before granting or denying a final exclusion. Thus, EPA will not grant the exclusion until it addresses all timely public comments (including those at public hearings, if any) on today's proposal.

Section 3010(b) at 42 USCA 6930(b) of RCRA allows rules to become effective in less than six months when the regulated community does not need the six-month period to come into compliance. That is the case here, because this rule, if finalized, would reduce the existing requirements for persons generating hazardous wastes.

The EPA believes that this exclusion should be effective immediately upon final publication because a six-month deadline is not necessary to achieve the purpose of § 3010(b), and a later effective date would impose unnecessary hardship and expense on this petitioner. These reasons also provide good cause for making this rule effective immediately, upon final publication, under the Administrative Procedure Act, 5 U.S.C. 553(d).

E. How Would This Action Affect States?

Because EPA is issuing today's exclusion under the Federal RCRA delisting program, only States subject to Federal RCRA delisting provisions would be affected. This would exclude two categories of States: States having a dual system that includes Federal RCRA requirements and their own requirements, and States who have received authorization from EPA to make their own delisting decisions.

Here are the details: We allow states to impose their own non-RCRA regulatory requirements that are more stringent than EPA's, under section 3009 of RCRA. These more stringent requirements may include a provision that prohibits a Federally issued exclusion from taking effect in the State. Because a dual system (that is, both Federal (RCRA) and State (non-RCRA) programs) may regulate a petitioner's waste, we urge petitioners to contact the State regulatory authority to establish the status of their wastes under the State law.

The EPA has also authorized some States (for example, Louisiana, Georgia, Illinois) to administer a RCRA delisting program in place of the Federal program, that is, to make State delisting decisions. Therefore, this exclusion does not apply in those authorized States. If Rhodia transports the petitioned waste to or manages the waste in any State with delisting authorization, Rhodia must obtain delisting authorization from that State before they can manage the waste as nonhazardous in the State.

II. Background

A. What is the History of the Delisting Program?

The EPA published an amended list of hazardous wastes from nonspecific and specific sources on January 16, 1981, as part of its final and interim final regulations implementing Section 3001 of RCRA. The EPA has amended this list several times and published it in §§ 261.31 and 261.32.

We list these wastes as hazardous because: (1) They typically and frequently exhibit one or more of the characteristics of hazardous wastes identified in Subpart C of Part 261 (that is, ignitability, corrosivity, reactivity, and toxicity) or (2) they meet the criteria for listing contained in §§ 261.11 (a)(2) or (a)(3).

Individual waste streams may vary, however, depending on raw materials, industrial processes, and other factors. Thus, while a waste described in these regulations generally is hazardous, a specific waste from an individual facility meeting the listing description may not be hazardous.

For this reason, §§ 260.20 and 260.22 provide an exclusion procedure, called delisting, which allows persons to prove that EPA should not regulate a specific waste from a particular generating facility as a hazardous waste.

B. What Is a Delisting Petition, and What Does It Require of a Petitioner?

A delisting petition is a request from a facility to EPA or an authorized State to exclude wastes from the list of hazardous wastes. The facility petitions the Agency because they do not consider the wastes hazardous under RCRA regulations.

In a delisting petition, the petitioner must show that wastes generated at a particular facility do not meet any of the criteria for the listed wastes. The criteria for which EPA lists a waste are in Part 261 and in the background documents for the listed wastes.

In addition, under § 260.22, a petitioner must prove that the waste does not exhibit any of the hazardous waste characteristics (that is, ignitability, reactivity, corrosivity, and toxicity) and present sufficient information for EPA to decide whether factors other than those for which the waste was listed warrant retaining it as a hazardous waste. (See Part 261 and the background documents for the listed wastes.)

Generators remain obligated under RCRA to confirm whether their waste remains nonhazardous based on the hazardous waste characteristics even if EPA has ''delisted'' the wastes.

C. What Factors Must EPA Consider in Deciding Whether To Grant a Delisting Petition?

Besides considering the criteria in § 260.22(a), in 42 U.S.C. 6921(f), and in the background documents for the listed wastes, EPA must consider any factors (including additional constituents) other than those for which we listed the waste if a reasonable basis exists that these additional factors could cause the waste to be hazardous. (See 3010(b) of the Solid Waste Disposal Act.)

The EPA must also consider as hazardous wastes mixtures containing listed hazardous wastes and wastes derived from treating, storing, or disposing of listed hazardous waste. See §§ 261.3(a)(2) (iii and iv) and (c)(2)(i), called the ''mixture'' and ''derived-from'' rules, respectively. These wastes are also eligible for exclusion and remain hazardous wastes until excluded.

The ''mixture'' and ''derived-from'' rules are now final, after having been vacated, remanded, and reinstated. On December 6, 1991, the U.S. Court of Appeals for the District of Columbia vacated the ''mixture/derived from'' rules and remanded them to EPA on procedural grounds. See *Shell Oil Co.* v. *EPA.*, 950 F.2d 741 (D.C. Cir. 1991). On March 3, 1992, EPA reinstated the mixture and derived-from rules, and solicited comments on other ways to regulate waste mixtures and residues See (57 FR 7628). These rules became final on October 30, 1992 See (57 FR 49278). Consult these references for more information about mixtures derived from wastes.

II. EPA's Evaluation of the Waste Data

A. What Waste Did Rhodia Petition EPA To Delist?

On November 4, 1997, Rhodia petitioned the EPA to exclude from the lists of hazardous waste contained in §§ 261.31 and 261.32, a waste by-product (Filter-Cake Sludge) which falls under the classification of listed waste because of the ''derived from'' rule in RCRA 40 CFR 260.3(c)(2)(i). Specifically, in its petition, Rhodia, Incorporated, located in Houston, Texas, requested that EPA grant an exclusion for 1,200 cubic yards per year of filter-cake sludge resulting from its hazardous waste treatment process. The resulting waste is listed, in accordance with § 261.3(c)(2)(i) (i.e., the ''derived from'' rule).

B. Who Is Rhodia, and What Process Does It Use?

Rhodia owns and operates a 46-acre facility which is primarily involved in the manufacture of sulfuric acid. Rhodia has been in operation since 1917, primarily producing various strengths and grades of sulfuric acid, sulfur dioxide, oleum, and sulfur trioxide. Rhodia generates sulfuric acid using a spray burning SARU. The recycling process requires the use of an industrial furnace. The furnace utilizes natural gas as the primary fuel. However, Rhodia also treats high and low British Thermal Unit (BTU) pumpable liquid hazardous waste in the furnace. Rhodia accepts hazardous waste from off-site generators for incineration in the sulfuric acid regeneration furnace. A weak acid blowdown stream generated from the wet gas scrubber, cooler, and electrostatic precipitator is treated at the AWT system. The petitioned waste is dewatered filter-cake sludge resulting from the AWT system. The waste by-product (filter-cake sludge) currently falls under the classification of listed waste according to RCRA 40 CFR 261.3(c)(2)(i) because of the ''derived from'' rule. The waste codes of the constituents of concern are EPA Hazardous Waste Nos. D001–D043, F001–F012, F019, F024, F025, F032, F034, F037–F039, K002–004, K006–K011, K013–K052, K060–K062, K064–K066, K069, K071, K073, K083–K088, K090–K091, K093–K118, K123–K126, K131–K133, K136, K141–K145, K147–K151, K156–K161, P001–P024, P026–P031, P033–P034, P036–P051, P054, P056–P060, P062–P078, P081–P082, P084–P085, P087–P089, P092–P116, P118–P123, P127–P128, P185, P188–P192, P194, P196–P199, P201–P205, U001–U012, U014–U039, U041–U053, U055–U064, U066–U099, U101–U103, U105–U138, U140–U174, U176–U194, U196–U197, U200–U211, U213–U223, U225–U228, U234–U240, U243–U244, U246–U249, U271, U277–U280, U328, U353, U359, U364–U367, U372–U373, U375–U379, U381–U396, U400–U404, U407, U409–U411.

C. How Did Rhodia Sample and Analyze the Waste Data in This Petition?

Rhodia analyzed the samples for the complete list of constituents included in 40 CFR Part 264, Appendix IX and the additional parameters for waste common to the petrochemical, oil and gas industries. The analyses was performed using EPA-approved methods. The analytical parameters and methods are provided in Table I.

TABLE I.—ANALYTICAL PARAMETERS AND METHODS

Parameter	Matrix	Method
GC/MS BNA, App IX List	Solid	SW846 Method 8270.
GC/MS VOA, App IX List	Solid	SW846 Method 8240.
Metals—App IX List	Solid	SW846 Methods 6010/7000 Series.
Herbicides—App IX List	Solid	SW846 Method 8150.
Pesticide/PCB, App IX List	Solid	SW846 Method 8080.
Organophosporus Pesticides, App IX List	Solid	SW846 Method 8140.
Sulfide	Solid	EPA 376.1.
Cyanide, Total	Solid	SW846, Method 9010.
Dioxin/Furan—App IX List	Solid	SW846 Method 8280.
TCLP—40 CFR 261.24 List, and Nickel	Solid	SW846 Method 1311.
Neutral Leach Cyanide	Solid	SW846 Method 1311 (Modified).
Oil & Grease	Solid	EPA 413.1.
Reactive Cyanide	Solid	SW 846 Chapter 7.3.3.2.
Reactive Sulfide	Solid	SW846 Chapter 7.3.4.2.
Flash Point Closed Cup	Solid	SW846 Method 1010.
pH	Solid	SW846 Method 9045.

Note: Rhodia performed TCLP analyses for specific constituents detected in the total analyses for a given sample.

D. What Were the Results of Rhodia's Analysis?

The EPA believes that the descriptions of the Rhodia hazardous waste process and analytical characterization, in conjunction with the proposed verification testing requirements (as discussed later in this notice), provide a reasonable basis to grant Rhodia's petition for an exclusion of the filter-cake sludge. The EPA believes the data submitted in support of the petition show Rhodia's process can render the filter-cake sludge non-hazardous. The EPA has reviewed the sampling procedures used by Rhodia and has determined they satisfy EPA criteria for collecting representative samples of the variations in constituent concentrations in the filter-cake sludge. The data submitted in support of the petition show that constituents in Rhodia's waste are presently below health-based levels used in the delisting decision-making. The EPA believes that Rhodia has successfully demonstrated that the filter-cake sludge is non-hazardous.

E. How Did EPA Evaluate the Risk of Delisting the Waste?

For this delisting determination, EPA used such information gathered to identify plausible exposure routes (i.e., ground water, surface water, air) for hazardous constituents present in the petitioned waste. The EPA determined that disposal in a Subtitle D landfill/surface impoundment is the most reasonable, worst-case disposal scenario for Rhodia's petitioned waste, and that the major exposure route of concern would be ingestion of contaminated ground water. EPA applied a particular fate and transport model, EPA Composite Model for Landfills (EPACML), to predict the maximum allowable concentrations of hazardous constituents that may release from the petitioned waste after disposal and determined the potential impact of the disposal of Rhodia's petitioned waste on human health and the environment. Specifically, EPA used the maximum estimated waste volumes and the maximum reported extract concentrations as inputs to estimate the constituent concentrations in the ground water at a hypothetical receptor well downgradient from the disposal site. The calculated receptor well concentrations (referred to as compliance-point concentrations) were then compared directly to the health-based levels at an assumed risk of 10^{-6} used in delisting decision-making for the hazardous constituents of concern.

The EPA believes that this fate and transport model represents a reasonable worst-case scenario for disposal of the petitioned waste in a landfill/surface impoundment, and that a reasonable worst-case scenario is appropriate when evaluating whether a waste should be relieved of the protective management constraints of RCRA Subtitle C. The use of some reasonable worst-case scenario resulted in conservative values for the compliance-point concentrations and ensured that the waste, once removed from hazardous waste regulation, may not pose a significant threat to human health or the environment. In most cases, because a delisted waste is no longer subject to hazardous waste control, EPA is generally unable to predict, and does not presently control, how a petitioner will manage a waste after delisting. Therefore, EPA currently believes that it is inappropriate to consider extensive site-specific factors when applying the fate and transport model.

The EPA also considers the applicability of ground water monitoring data during the evaluation of delisting petitions. In this case, EPA determined that it would be unnecessary to request ground water monitoring data. Rhodia currently disposes of its waste in an off-site RCRA landfill. This landfill did not begin accepting this petitioned waste generated by the Rhodia facility until 1991. This petitioned waste comprises a small fraction of the total waste managed in the unit. Therefore, EPA believes that any ground water monitoring data from the landfill would not be meaningful for an evaluation of the specific effect of this petitioned waste on ground water.

From the evaluation of Rhodia's delisting petition, EPA developed a list of constituents for the verification testing conditions. Proposed maximum allowable leachable concentrations for these constituents were derived by back-calculating from the delisting health-based levels through the proposed fate and transport model for a landfill management scenario. These concentrations (*i.e.*, ''delisting levels'') are part of the proposed verification testing conditions of the exclusion.

Similar to other facilities seeking exclusions, Rhodia's exclusion (if granted) would be contingent upon the facility conducting analytical testing of representative samples of the petitioned waste at its Houston facility. This testing would be necessary to verify that the treatment system is operating as demonstrated in the petition submitted on November 4, 1997. Specifically, the verification testing requirements, demonstrate that the processing facility will generate nonhazardous waste (*i.e.*, waste that meet EPA's verification testing conditions). The EPA believes

that the descriptions of the Rhodia, Inc. hazardous waste process and analytical characterization, in conjunction with the proposed verification testing requirements (as discussed later in this notice) provide a reasonable basis to conclude that the likelihood of migration of hazardous constituents from the petitioned waste will be substantially reduced so that short-term and long-term threats to human health and the environment are minimized. Thus, EPA should grant Rhodia's petition for a conditional exclusion of the filter-cake sludge.

The EPA Region 6 Delisting Program guidance document states that the appropriate fate and effect model will be used to determine the effect the petitioned waste could have on human health if it is not managed as a hazardous waste. Specifically, the model considers the maximum estimated waste volume and the maximum reported leachate concentrations as inputs to estimate the constituent concentrations in the ground water at a hypothetical receptor well downgradient from the disposal site. The calculated receptor well concentrations (referred to as compliance-point concentrations) are then compared directly to the health-based levels used in delisting decision-making for hazardous constituents of concern. EPA Region 6 has selected the EPA Composite Model for Landfills (EPACML, **Federal Register** Vol. 56, No. 138, July 18, 1991, Page 32993) as the appropriate model for the delisting program. This subsection presents an evaluation of the potential for ground water contamination for the petitioned waste using the EPACML model.

The EPA considered the appropriateness of alternative waste management scenarios for Rhodia's filter-cake sludge. The EPA decided, based on the information provided in the petition, that disposal of the filter-cake in a municipal solid waste landfill is the most reasonable, worst-case scenario for the filter-cake sludge. The disposal of the filter-cake sludge in a surface impoundment would be the most reasonable worst-case scenario. Under a landfill/surface impoundment disposal scenario, the major exposure route of concern for any hazardous constituents would be ingestion of contaminated ground water. The EPA, therefore, evaluated Rhodia's petitioned waste using the modified EPA Composite Model for Landfills/Surface Impoundments (EPACML) which predicts the potential for ground water contamination from waste landfilled/placed in a surface impoundment. See 56 *FR* 32993 (July 18, 1991), 56 *FR* 67197 (December 30, 1991) and the RCRA public docket for these notices for a detailed description of the EPACML model, the disposal assumptions, and the modifications made for delisting. This model, which includes both unsaturated and saturated zone transport modules, predicts reasonable worse-case contaminant levels in ground water at a compliance point (*i.e.*, a receptor well serving as a drinking-water supply). Specifically, the model estimated the dilution/attenuation factor (DAF) resulting from subsurface processes such as three-dimensional dispersion and dilution from ground water recharge for a specific volume of waste.

For the evaluation of Rhodia's petitioned waste, EPA used the EPACML to evaluate the mobility of the hazardous constituents detected in the extract of samples of Rhodia's filter-cake sludge. Total analysis was also utilized for the filter-cake sludge. Typically, EPA uses the maximum annual waste volume to derive a petition-specific DAF. The maximum annual waste volume for Rhodia is 1,200 cubic yards per year. The DAFs are currently calculated assuming an ongoing process generates waste for 20 years.

Analytical data for the filter-cake sludge samples were used in the model. The data summaries for detected constituents are presented in Tables II, III, IV, and V.

The EPA's evaluation of the Filter-cake Sludge is based on the maximum reported Total and TCLP concentrations (See Table III). Consequently the compliance point concentrations are below current health based levels and Land Disposal Restrictions for Non-Wastewater (See Table V).

Based on the EPACML, the petitioned waste should be delisted because no constituents of concern exceed the delisting concentrations.

TABLE II.—ACETONE AND CHLOROFORM DATA SUMMARY [1]

Filter-cake samples (mg/kg)	Analytical parameter (VOCs)	
	Acetone	Chloroform
Appendix IX Reporting Limit [2]	0.010	0.05
FC970512–01	0.60	0.10
FC970512–01RE [3]	0.26	0.02
FC970513–02	0.30	0.10
FC970513–02RE [3]	0.28	0.04
FC970514–03	0.25	0.056
FC970514–03RE [3]	0.16	0.023
FC970515–04	[4] ND	ND
FC970515–04RE [3]	[5] NA	NA
FC970517–05	0.043	ND
FC970517–05RE [3]	NA	NA
FC970520–06	0.050	ND
FC970520–06RE [3]	NA	NA
FC970521–07	0.049	ND
FC970522–08	0.058	ND
FC970522–08RE [3]	0.17	ND
FC970522–08	ND	ND
FC970522–08RE [3]	0.13	ND

[1] This table only summarizes the analytical results for the volatile organic compounds that were detected by the laboratory against the Appendix IX reporting limits.
[2] The Appendix IX reporting limits for acetone are chloroform are referenced from 40 CFR 264, Appendix IX.
[3] RE—Replicate samples.
[4] ND—Not detected.
[5] NA—Not analyzed.

TABLE III.—MAXIMUM TOTAL AND TCLP CONSTITUENT CONCENTRATIONS FILTER-CAKE SLUDGE [1]

Constituent	Total constituent analyses (mg/kg)	TCLP Leachate Concentration (mg/l)
Arsenic	830.00	ND
Barium	193.00	ND
Cadmium	3.50	ND
Chromium	852.00	ND
Cobalt	81.20	4.06
Copper	1500.00	75.00
Mercury	81.60	ND
Lead	861.00	ND
Nickel	1210.00	3.00
Selenium	36.30	ND
Silver	94.90	ND
Vanadium	92.10	4.61
Zinc	3130.00	156.50

[1] These levels represent the highest concentration of each constituent found in any one sample. These levels do not necessarily represent the specific levels found in one sample.

TABLE IV.—OIL AND GREASE RESULTS SUMMARY [1]

Filter-cake samples (mg/kg)	Analytical Parameter (specific) Oil and grease
Laboratory Reporting Limit [2]	3,520
FC970520–06	3,660

[1] This table only summarizes the results for those special parameters that were detected above laboratory detection limits.
[2] Appendix IX reporting limits are not available for oil and grease. Therefore, the laboratory's detection limits were used for the comparison.

TABLE V.—EPACML: COMPARISON OF FILTER-CAKE SLUDGE CALCULATED COMPLIANCE-POINT CONCENTRATIONS AGAINST REGULATORY STANDARDS

Constituents	Compliance point concentrations (mg/l) [1]	Levels of concern (mg/l) [2]	LDR non-waste-water (mg/l)
Arsenic	0.001	0.05	5.00
Barium	0.006	2.00	21.00
Cadmium	0.001	0.005	0.11
Chromium	0.001	0.1	0.60
Mercury	[3] ND	0.002	0.025
Nickel	0.033	0.1	11.00
Lead	0.001	0.015	0.75
Selenium	[3] ND	0.05	5.70
Silver	0.001	0.2	0.14

[1] Using the maximum TCLP leachate concentration, based on a DAF of 90 for a maximum annual volume of 1,200 cubic yards.
[2] See ''Docket Report on Health-Based Levels and Solubilities Used in the Evaluation of Delisting Petitions,'' May 1996 located in the RCRA Public Docket for today's notice.
[3] ND = Not Detected.

F. What Did EPA Conclude About Rhodia's Analysis?

The EPA concluded, after reviewing Rhodia's processes that no other hazardous constituents of concern, other than those for which tested, are likely to be present or formed as reaction products or by products in Rhodia's waste. In addition, on the basis of explanations and analytical data provided by Rhodia, pursuant to § 260.22, the EPA concludes that the petitioned waste does not exhibit any of the characteristics of ignitability, corrosivity, or reactivity. See §§ 261.21, 261.22, and 261.23, respectively.

G. What Other Factors Did EPA Consider?

During the evaluation of Rhodia's petition, EPA also considered the potential impact of the petitioned waste via non-ground water routes (i.e., air emission and surface runoff). With regard to airborne dispersion in particular, EPA believes that exposure to airborne contaminants from Rhodia's petitioned waste is unlikely. Therefore, no appreciable air releases are likely from Rhodia's waste under any likely disposal conditions. The EPA evaluated the potential hazards resulting from the unlikely scenario of airborne exposure to hazardous constituents released from Rhodia's waste in an open landfill. The results of this worst-case analysis indicated that there is no substantial present or potential hazard to human health and the environment from airborne exposure to constituents from Rhodia's Filter-cake sludge. A description of EPA's assessment of the potential impact of Rhodia's waste, regarding airborne dispersion of waste contaminants, is presented in the RCRA public docket for today's proposed rule.

The EPA also considered the potential impact of the petitioned waste via a surface water route. The EPA believes that containment structures at municipal solid waste landfills can effectively control surface water runoff,

as the Subtitle D regulations (See 56 FR 50978, October 9, 1991) prohibit pollutant discharges into surface waters. Furthermore, the concentrations of any hazardous constituents dissolved in the runoff will tend to be lower than the levels in the TCLP leachate analyses reported in today's notice due to the aggressive acidic medium used for extraction in the TCLP. The EPA believes that, in general, leachate derived from the waste is unlikely to directly enter a surface water body without first traveling through the saturated subsurface where dilution and attenuation of hazardous constituents will also occur. Leachable concentrations provide a direct measure of solubility of a toxic constituent in water and are indicative of the fraction of the constituent that may be mobilized in surface water as well as ground water.

Based on the reasons discussed above, EPA believes that the contamination of surface water through runoff from the waste disposal area is very unlikely. Nevertheless, EPA evaluated the potential impacts on surface water if Rhodia's waste were released from a municipal solid waste landfill through runoff and erosion. See, the RCRA public docket for today's proposed rule. The estimated levels of the hazardous constituents of concern in surface water would be well below health-based levels for human health, as well as below EPA Chronic Water Quality Criteria for aquatic organisms (USEPA, OWRS, 1987). The EPA, therefore, concluded that Rhodia's filter-cake Sludge is not a present or potential substantial hazard to human health and the environment via the surface water exposure pathway.

H. What is EPA's Final Evaluation of This Delisting Petition?

The descriptions of Rhodia's hazardous waste process and analytical characterization, with the proposed verification testing requirements (as discussed later in this notice), provide a reasonable basis for EPA to grant the exclusion. The data submitted in support of the petition show that constituents in the waste are below the applicable treatment standards (see Table V). We conclude Rhodia's process will substantially reduce the likelihood of migration of hazardous constituents from the petitioned waste. Their process also minimizes short-term and long-term threats from the petitioned waste to human health and the environment.

Thus, EPA believes we should grant Rhodia an exclusion for the filter-cake sludge. The EPA believes the data submitted in support of the petition show Rhodia's process can render the filter-cake sludge nonhazardous.

We have reviewed the sampling procedures used by Rhodia and have determined they satisfy EPA criteria for collecting representative samples of variable constituent concentrations in the filter-cake sludge. The data submitted in support of the petition show that constituents in Rhodia's waste are presently below the compliance point concentrations used in the delisting decision-making and would not pose a substantial hazard to the environment. The EPA believes that Rhodia has successfully demonstrated that the filter-cake sludge are nonhazardous.

The EPA therefore, proposes to grant a conditional exclusion to the Rhodia Corporation, in Houston, Texas, for the filter-cake sludge described in its petition. The EPA's decision to conditionally exclude this waste is based on descriptions of the treatment activities associated with the petitioned waste and characterization of the filter-cake sludge.

If we finalize the proposed rule, the Agency will no longer regulate the petitioned waste under parts 262 through 268 and the permitting standards of part 270.

IV. Next Steps

A. With What Conditions Must the Petitioner Comply?

The petitioner, Rhodia, must comply with the requirements in 40 CFR part 261, Appendix IX, Tables 1 and 2. The text below gives the rationale and details of those requirements.

(1) Delisting Levels

This paragraph provides the levels of constituents that Rhodia must test the leachate from the filter-cake sludge, below which these wastes would be considered nonhazardous.

The EPA selected the set of inorganic and organic constituents specified in Paragraph (1) because of information in the petition. We compiled the list from the composition of the waste, descriptions of Rhodia's treatment process, previous test data provided for the waste, and the respective health-based levels used in delisting decision-making.

We established the proposed delisting levels by calculating the Maximum Allowable Leachate (MALs) concentrations from the Health-based levels (HBL) for the constituents of concern and the EPACML chemical-specific DAF of 90, that is, MAL = HBL × DAF. We also limited the MALs so the concentrations would not exceed non waste water concentrations in the Land Disposal Restriction treatment standards in 40 CFR part 268. These delisting levels correspond to the allowable levels measured in the TCLP extract of the waste.

(2) Waste Holding and Handling

The purpose of this paragraph is to ensure that any filter-cake sludge which might contain hazardous levels of inorganic and organic constituents are managed and disposed of in accordance with Subtitle C of RCRA. Holding the filter-cake sludge until characterization is complete will protect against improper handling of hazardous material. If EPA determines that the data collected under this condition do not support the data provided for the petition the exclusion will not cover the petitioned waste.

(3) Verification Testing Requirements

(A) *Initial Verification Testing.* If the EPA determines that the data from the initial verification period shows the treatment process is effective, Rhodia may request that EPA allow it to conduct verification testing quarterly. If EPA approves this request in writing, then Rhodia may begin verification testing quarterly.

The EPA believes that an initial period of 60 days is adequate for a facility to collect sufficient data to verify that the data provided for the filter-cake sludge in the 1998 petition, is representative.

We are requiring Rhodia to conduct a multiple pH analysis because in our experience more leaching can occur from disposed waste when the pH of the waste is extremely acidic or basic. The multiple pH test is similar to the TCLP, but the test uses different pH extraction fluids. Rhodia should design the analytical test to show that the petitioned waste when disposed of in an acidic and basic landfill environment would not leach concentrations above the levels of regulatory concern. The second condition should reflect how the petitioned waste will behave when it is disposed in a landfill environment similar to the pH of the waste. The EPA believes that evaluating the leachate generated from using extraction fluids over a range of pH's can simulate general disposal conditions and provide added assurance that the waste will remain nonhazardous when disposal conditions change. The petitioner must perform these analyses to confirm that the leachate concentrations do not exceed the concentrations in Paragraph 1 over a wide pH range. While the waste's pH does vary, the Agency believes that under the various pH

conditions the waste will remain stable, and thus will proceed with the promulgation of the proposed decision.

If we determine that the data collected under this Paragraph do not support the data provided for the petition, the exclusion will not cover the generated wastes. If the data from the initial verification period demonstrate that the treatment process is effective, Rhodia may request quarterly testing. EPA will notify Rhodia, in writing, if and when they may replace the testing conditions in paragraph (3)(A)(i) with the testing conditions in (3)(B).

(B) *Subsequent Verification Testing.* The EPA believes that the concentrations of the constituents of concern in the filter-cake sludge may vary over time. As a result, to ensure that Rhodia's treatment process can effectively handle any variation in constituent concentrations in the waste, we are proposing a subsequent verification testing condition.

The proposed subsequent testing would verify that Rhodia operates the AWT as it did during the initial verification testing. It would also verify that the filter-cake sludge does not exhibit unacceptable levels of toxic constituents. The EPA is proposing to require Rhodia to analyze representative samples of the filter-cake sludge quarterly during the first year of waste generation. Rhodia would begin annual sampling on the anniversary date of the final exclusion. They must also use the multiple pH extraction procedure for samples collected during the annual sampling.

(4) Changes in Operating Conditions

Paragraph (4) would allow Rhodia the flexibility of modifying its processes (for example, changes in equipment or change in operating conditions) to improve its treatment process. However, Rhodia must prove the effectiveness of the modified process and request approval from the EPA. Rhodia must manage wastes generated during the new process demonstration as hazardous waste until they have obtained written approval and Paragraph (3) is satisfied.

(5) Data Submittals

To provide appropriate documentation that Rhodia's facility is properly treating the waste, Rhodia must compile, summarize, and keep delisting records on-site for a minimum of five years. They should keep all analytical data obtained through Paragraph (3) including quality control information for five years. Paragraph (5) requires that Rhodia furnish these data upon request for inspection by any employee or representative of EPA or the State of Texas.

If the proposed exclusion is made final, it will apply only to 1,200 cubic yards of filter-cake sludge, generated annually at the Rhodia facility after successful verification testing.

We would require Rhodia to file a new delisting petition under any of the following circumstances:

(a) If they significantly alter the thermal desorption treatment system except as described in Paragraph (4).

(b) If they use any new manufacturing or production process(es), or significantly change from the current process(es) described in their petition; or

(c) If they make any changes that could affect the composition or type of waste generated.

Rhodia must manage waste volumes greater than 1,200 cubic yards of filter-cake sludge as hazardous until we grant a new exclusion.

When this exclusion becomes final, Rhodia's management of the wastes covered by this petition would be relieved from Subtitle C jurisdiction. Rhodia must either treat, store, or dispose of the waste in an on-site facility that has a State permit, license, or is registered to manage municipal or industrial solid waste. If not, Rhodia must ensure that it delivers the waste to an off-site storage, treatment, or disposal facility that has a State permit, license, or is registered to manage municipal or industrial solid waste.

(6) Reopener Language

The purpose of Paragraph 6 is to require Rhodia to disclose new or different information related to a condition at the facility or disposal of the waste if it is pertinent to the delisting. Rhodia must also use this procedure, if the waste sample in the annual testing fails to meet the levels found in Paragraph 1. This provision will allow EPA to reevaluate the exclusion if a source provides new or additional information to the Agency. The EPA will evaluate the information on which we based the decision to see if it is still correct, or if circumstances have changed so that the information is no longer correct or would cause EPA to deny the petition if presented. This provision expressly requires Rhodia to report differing site conditions or assumptions used in the petition in addition to failure to meet the annual testing conditions within 10 days of discovery. If EPA discovers such information itself or from a third party, it can act on it as appropriate. The language being proposed is similar to those provisions found in RCRA regulations governing no-migration petitions at § 268.6.

The EPA believes that we have the authority under RCRA and the Administrative Procedures Act, 5 U.S.C. § 551 (1978) *et seq.*, to reopen a delisting decision. We may reopen a delisting decision when we receive new information that calls into question the assumptions underlying the delisting.

The Agency believes a clear statement of its authority in delistings is merited in light of Agency experience. See Reynolds Metals Company at 62 FR 37694 and 62 FR 63458 where the delisted waste leached at greater concentrations in the environment than the concentrations predicted when conducting the TCLP, thus leading the Agency to repeal the delisting. If an immediate threat to human health and the environment presents itself, EPA will continue to address these situations case by case. Where necessary, EPA will make a good cause finding to justify emergency rulemaking. *See* APA 553 (b).

(7) *Notification Requirements*

In order to adequately track wastes that have been delisted, EPA is requiring that Rhodia provide a one-time notification to any State regulatory agency through which or to which the delisted waste is being carried. Rhodia must provide this notification within 60 days of commencing this activity.

B. What Happens if Rhodia Violates the Terms and Conditions?

If Rhodia violates the terms and conditions established in the exclusion, the Agency will start procedures to withdraw the exclusion. Where there is an immediate threat to human health and the environment, the Agency will continue to evaluate these events on a case-by-case basis. The Agency expects Rhodia to conduct the appropriate waste analysis and comply with the criteria explained above in Paragraphs 3,4,5 and 6 of the exclusion.

V. Public Comments

A. How can I as an Interested Party Submit Comments?

The EPA is requesting public comments on this proposed decision. Please send three copies of your comments. Send two copies to William Gallagher, Delisting Section, Multimedia Planning and Permitting Division (6PD–O), Environmental Protection Agency (EPA), 1445 Ross Avenue, Dallas, Texas 75202. Send a third copy to the Texas Natural Resource Conservation Commission, 12100 Park 35 Circle, Austin, Texas

78753. Identify your comments at the top with this regulatory docket number: ''F–99–TXDEL–RHODIA.''

You should submit requests for a hearing to Robert Hannesschlager, Acting Director, Multimedia Planning and Permitting Division (6PD), Environmental Protection Agency, 1445 Ross Avenue, Dallas, Texas 75202.

B. How May I Review the Docket or Obtain Copies of the Proposed Exclusion?

You may review the RCRA regulatory docket for this proposed rule at the Environmental Protection Agency Region 6, 1445 Ross Avenue, Dallas, Texas 75202. It is available for viewing in the EPA Freedom of Information Act Review Room from 9:00 a.m. to 4 p.m., Monday through Friday, excluding Federal holidays. Call (214) 665–6444 for appointments. The public may copy material from any regulatory docket at no cost for the first 100 pages, and at fifteen cents per page for additional copies.

VI. Regulatory Impact

Under Executive Order 12866, EPA must conduct an ''assessment of the potential costs and benefits'' for all ''significant'' regulatory actions.

The proposal to grant an exclusion is not significant, since its effect, if promulgated, would be to reduce the overall costs and economic impact of EPA's hazardous waste management regulations. This reduction would be achieved by excluding waste generated at a specific facility from EPA's lists of hazardous wastes, thus enabling a facility to manage its waste as nonhazardous.

Because there is no additional impact from today's proposed rule, this proposal would not be a significant regulation, and no cost/benefit assessment is required. The Office of Management and Budget (OMB) has also exempted this rule from the requirement for OMB review under section (6) of Executive Order 12866.

VII. Regulatory Flexibility Act

Under the Regulatory Flexibility Act, 5 U.S.C. 601–612, whenever an agency is required to publish a general notice of rulemaking for any proposed or final rule, it must prepare and make available for public comment a regulatory flexibility analysis which describes the impact of the rule on small entities (that is, small businesses, small organizations, and small governmental jurisdictions). No regulatory flexibility analysis is required, however, if the Administrator or delegated representative certifies that the rule will not have any impact on a small entities.

This rule, if promulgated, will not have an adverse economic impact on small entities since its effect would be to reduce the overall costs of EPA's hazardous waste regulations and would be limited to one facility. Accordingly, I hereby certify that this proposed regulation, if promulgated, will not have a significant economic impact on a substantial number of small entities. This regulation, therefore, does not require a regulatory flexibility analysis.

VIII. Paperwork Reduction Act

Information collection and record-keeping requirements associated with this proposed rule have been approved by the Office of Management and Budget (OMB) under the provisions of the Paperwork Reduction Act of 1980 (Public Law 96–511, 44 U.S.C. 3501 *et seq.*) and have been assigned OMB Control Number 2050–0053.

IX. Unfunded Mandates Reform Act

Under section 202 of the Unfunded Mandates Reform Act of 1995 (UMRA), Public Law 104–4, which was signed into law on March 22, 1995, EPA generally must prepare a written statement for rules with Federal mandates that may result in estimated costs to State, local, and tribal governments in the aggregate, or to the private sector, of $100 million or more in any one year.

When such a statement is required for EPA rules, under section 205 of the UMRA EPA must identify and consider alternatives, including the least costly, most cost-effective, or least burdensome alternative that achieves the objectives of the rule. The EPA must select that alternative, unless the Administrator explains in the final rule why it was not selected or it is inconsistent with law.

Before EPA establishes regulatory requirements that may significantly or uniquely affect small governments, including tribal governments, it must develop under section 203 of the UMRA a small government agency plan. The plan must provide for notifying potentially affected small governments, giving them meaningful and timely input in the development of EPA regulatory proposals with significant Federal intergovernmental mandates, and informing, educating, and advising them on compliance with the regulatory requirements.

The UMRA generally defines a Federal mandate for regulatory purposes as one that imposes an enforceable duty upon State, local, or tribal governments or the private sector.

The EPA finds that today's delisting decision is deregulatory in nature and does not impose any enforceable duty on any State, local, or tribal governments or the private sector. In addition, the proposed delisting decision does not establish any regulatory requirements for small governments and so does not require a small government agency plan under UMRA section 203.

X. Executive Order 12875

Under Executive Order 12875, EPA may not issue a regulation that is not required by statute and that creates a mandate upon a state, local, or tribal government, unless the Federal government provides the funds necessary to pay the direct compliance costs incurred by those governments. If the mandate is unfunded, EPA must provide to the Office of Management and Budget a description of the extent of EPA's prior consultation with representatives of affected state, local, and tribal governments, the nature of their concerns, copies of written communications from the governments, and a statement supporting the need to issue the regulation. In addition, Executive Order 12875 requires EPA to develop an effective process permitting elected officials and other representatives of state, local, and tribal governments ''to provide meaningful and timely input in the development of regulatory proposals containing significant unfunded mandates.'' Today's rule does not create a mandate on state, local or tribal governments. The rule does not impose any enforceable duties on these entities. Accordingly, the requirements of section 1(a) of Executive Order 12875 do not apply to this rule.

XI. Executive Order 13045

The Executive Order 13045 is entitled ''Protection of Children from Environmental Health Risks and Safety Risks'' (62 FR 19885, April 23, 1997). This order applies to any rule that EPA determines (1) is economically significant as defined under Executive Order 12866, and (2) the environmental health or safety risk addressed by the rule has a disproportionate effect on children. If the regulatory action meets both criteria, the Agency must evaluate the environmental health or safety effects of the planned rule on children, and explain why the planned regulation is preferable to other potentially effective and reasonably feasible alternatives considered by the Agency. This proposed rule is not subject to Executive Order 13045 because this is not an economically significant

regulatory action as defined by Executive Order 12866.

XII. Executive Order 13084

Because this action does not involve any requirements that affect Indian Tribes, the requirements of section 3(b) of Executive Order 13084 do not apply.

Under Executive Order 13084, EPA may not issue a regulation that is not required by statute, that significantly affects or uniquely affects that communities of Indian tribal governments, and that imposes substantial direct compliance costs on those communities, unless the Federal government provides the funds necessary to pay the direct compliance costs incurred by the tribal governments.

If the mandate is unfunded, EPA must provide to the Office of Management and Budget, in a separately identified section of the preamble to the rule, a description of the extent of EPA's prior consultation with representatives of affected tribal governments, a summary of the nature of their concerns, and a statement supporting the need to issue the regulation.

In addition, Executive Order 13084 requires EPA to develop an effective process permitting elected and other representatives of Indian tribal governments ''to meaningful and timely input'' in the development of regulatory policies on matters that significantly or uniquely affect their communities of Indian tribal governments. This action does not involve or impose any requirements that affect Indian Tribes. Accordingly, the requirements of section 3(b) of Executive Order 13084 do not apply to this rule.

XIII. National Technology Transfer and Advancement Act

Under Section 12(d) of the National Technology Transfer and Advancement Act, the Agency is directed to use voluntary consensus standards in its regulatory activities unless to do so would be inconsistent with applicable law or otherwise impractical. Voluntary consensus standards are technical standards (e.g., materials specifications, test methods, sampling procedures, business practices, etc.) developed or adopted by voluntary consensus standard bodies. Where available and potentially applicable voluntary consensus standards are not used by EPA, the Act requires that Agency to provide Congress, through the OMB, an explanation of the reasons for not using such standards.

This rule does not establish any new technical standards and thus, the Agency has no need to consider the use of voluntary consensus standards in developing this final rule.

List of Subjects in 40 CFR Part 261

Environmental protection, Hazardous waste, Recycling, Reporting and recordkeeping requirements.

Authority: Sec. 3001(f) RCRA, 42 U.S.C. 6921(f)

Dated: September 29, 1999.

Robert Hannesschlager,

Acting Director, Multimedia Planning and Permitting Division, Region 6

For the reasons set out in the preamble, 40 CFR part 261 is proposed to be amended as follows:

PART 261—IDENTIFICATION AND LISTING OF HAZARDOUS WASTE

1. The authority citation for part 261 continues to read as follows:

Authority: 42 U.S.C. 6905, 6912(a), 6921, 6922, and 6938.

2. In Tables 1, 2, and 3 of Appendix IX of part 261 it is proposed to add the following waste stream in alphabetical order by facility to read as follows:

Appendix IX to Part 261—Wastes Excluded Under §§ 260.20 and 260.22

TABLE 1.—WASTE EXCLUDED FROM NON-SPECIFIC SOURCES

Facility and address	Waste description
* *	* * * * *
Rhodia, Houston, Texas	Filter-cake Sludge, (at a maximum generation of 1,200 cubic yards per calendar year) generated by Rhodia using the SARU and AWT treatment process to treat the filter-cake sludge (EPA Hazardous Waste Nos. D001–D43, F001–F012, F019, F024, F025, F032, F034, F037–F039) generated at Rhodia. Rhodia must implement a testing program that meets the following conditions for the exclusion to be valid: (1) *Delisting Levels:* All concentrations for the following constituents must not exceed the following levels (mg/l). For the filter-cake constituents must be measured in the waste leachate by the method specified in 40 CFR Part 261.24. (A) Filter-cake Sludge (i) Inorganic Constituents: Antimony—1.15; Arsenic—1.40; Barium—21.00; Beryllium—1.22; Cadmium—0.11; Cobalt—189.00; Copper—90.00; Chromium—0.60; Lead—0.75; Mercury—0.025; Nickel—9.00; Selenium—4.50; Silver—0.14; Thallium—0.20; Vanadium—1.60; Zinc—4.30 (ii) Organic Constituents: Chlorobenzene-Non Detect; Carbon Tetrachloride-Non Detect; Acetone—360; Chloroform—0.9 (2) *Waste Holding and Handling:* Rhodia must store in accordance with its RCRA permit, or continue to dispose of as hazardous waste all Filter-cake Sludge until the verification testing described in Condition (3)(A), as appropriate, is completed and valid analyses demonstrate that condition (3) is satisfied. If the levels of constituents measured in the samples of the Filter-cake Sludge do not exceed the levels set forth in Condition (1), then the waste is nonhazardous and may be managed and disposed of in accordance with all applicable solid waste regulations. (3) *Verification Testing Requirements:* Rhodia must perform sample collection and analyses, including quality control procedures, according to SW–846 methodologies. If EPA judges the process to be effective under the operating conditions used during the initial verification testing, Rhodia may replace the testing required in Condition (3)(A) with the testing required in Condition (3)(B). Rhodia must continue to test as specified in Condition (3)(A) until and unless notified by EPA in writing that testing in Condition (3)(A) may be replaced by Condition (3)(B).

TABLE 1.—WASTE EXCLUDED FROM NON-SPECIFIC SOURCES—Continued

Facility and address	Waste description
	(A) *Initial Verification Testing:* (i) At quarterly intervals for one year after the final exclusion is granted, Rhodia must collect and analyze composites of the filter-cake sludge. TCLP must be run on all waste and constituents for which total concentrations have been identified including constituents listed in Paragraph 1. Rhodia must conduct a multiple pH leaching procedure on samples collected during the quarterly intervals. Rhodia must perform the TCLP procedure using distilled water and three different pH extraction fluids to simulate disposal under three conditions. Simulate an acidic landfill environment, basic landfill environment and a landfill environment similar to the pH of the waste. Rhodia must report the operational and analytical test data, including quality control information, obtained during this initial period no later than 90 days after the generation of the waste. (B) *Subsequent Verification Testing:* Following termination of the quarterly testing, Rhodia must continue to test a representative composite sample for all constituents listed in Condition (1) on an annual basis (no later than twelve months after the final exclusion). (4) *Changes in Operating Conditions:* If Rhodia significantly changes the process which generate(s) the waste(s) and which may or could affect the composition or type waste(s) generated as established under Condition (1) (by illustration, but not limitation, change in equipment or operating conditions of the treatment process), or its NPDES permit is changed, revoked or not reissued, Rhodia must notify the EPA in writing and may no longer handle the waste generated from the new process or no longer discharge as nonhazardous until the waste meet the delisting levels set in Condition (1) and it has received written approval to do so from EPA. (5) *Data Submittals:* Rhodia must submit the information described below. If Rhodia fails to submit the required data within the specified time or maintain the required records on-site for the specified time, EPA, at its discretion, will consider this sufficient basis to reopen the exclusion as described in Paragraph 6. Rhodia must: (A) Submit the data obtained through Paragraph 3 to Mr. William Gallagher, Chief, Region 6 Delisting Program, EPA, 1445 Ross Avenue, Dallas, Texas 75202–2733, Mail Code, (6PD–O) within the time specified. (B) Compile records of operating conditions and analytical data from Paragraph (3), summarized, and maintained on-site for a minimum of five years. (C) Furnish these records and data when EPA or the State of Texas request them for inspection. (D) Send along with all data a signed copy of the following certification statement, to attest to the truth and accuracy of the data submitted: Under civil and criminal penalty of law for the making or submission of false or fraudulent statements or representations (pursuant to the applicable provisions of the Federal Code, which include, but may not be limited to, 18 U.S.C. § 1001 and 42 U.S.C. § 6928), I certify that the information contained in or accompanying this document is true, accurate and complete. As to the (those) identified section(s) of this document for which I cannot personally verify its (their) truth and accuracy, I certify as the company official having supervisory responsibility for the persons who, acting under my direct instructions, made the verification that this information is true, accurate and complete. If any of this information is determined by EPA in its sole discretion to be false, inaccurate or incomplete, and upon conveyance of this fact to the company, I recognize and agree that this exclusion of waste will be void as if it never had effect or to the extent directed by EPA and that the company will be liable for any actions taken in contravention of the company's RCRA and CERCLA obligations premised upon the company's reliance on the void exclusion. (6) *Reopener Language:* (A) If, anytime after disposal of the delisted waste, Rhodia possesses or is otherwise made aware of any environmental data (including but not limited to leachate data or groundwater monitoring data) or any other data relevant to the delisted waste indicating that any constituent identified for the delisting verification testing is at level higher than the delisting level allowed by the Regional Administrator or his delegate in granting the petition, then the facility must report the data, in writing, to the Regional Administrator or his delegate within 10 days of first possessing or being made aware of that data. (B) If the annual testing of the waste does not meet the delisting requirements in Paragraph 1, Rhodia must report the data, in writing, to the Regional Administrator or his delegate within 10 days of first possessing or being made aware of that data. (C) If Rhodia fails to submit the information described in paragraphs (5), (6)(A) or (6)(B) or if any other information is received from any source, the Regional Administrator or his delegate will make a preliminary determination as to whether the reported information requires Agency action to protect human health or the environment. Further action may include suspending, or revoking the exclusion, or other appropriate response necessary to protect human health and the environment.

TABLE 1.—WASTE EXCLUDED FROM NON-SPECIFIC SOURCES—Continued

Facility and address	Waste description
	(D) If the Regional Administrator or his delegate determines that the reported information does require Agency action, the Regional Administrator or his delegate will notify the facility in writing of the actions the Regional Administrator or his delegate believes are necessary to protect human health and the environment. The notice shall include a statement of the proposed action and a statement providing the facility with an opportunity to present information as to why the proposed Agency action is not necessary. The facility shall have 10 days from the date of the Regional Administrator or his delegate's notice to present such information. (E) Following the receipt of information from the facility described in paragraph (6)(D) or (if no information is presented under paragraph (6)(D)) the initial receipt of information described in paragraphs (5), (6)(A) or (6)(B), the Regional Administrator or his delegate will issue a final written determination describing the Agency actions that are necessary to protect human health or the environment. Any required action described in the Regional Administrator or his delegate's determination shall become effective immediately, unless the Regional Administrator or his delegate provides otherwise. (7) *Notification Requirements:* Rhodia must do following before transporting the delisted waste: Failure to provide this notification will result in a violation of the delisting petition and a possible revocation of the decision. (A) Provide a one-time written notification to any State Regulatory Agency to which or through which they will transport the delisted waste described above for disposal, 60 days before beginning such activities. (B) Update the one-time written notification if they ship the delisted waste into a different disposal facility.

TABLE 2.—WASTES EXCLUDED FROM SPECIFIC SOURCES

Facility and address	Waste description
* *	* * * * *
Rhodia, Houston,Texas	Filter-cake Sludge, (at a maximum generation of 1,200 cubic yards per calendar year) generated by Rhodia using the SARU and AWT treatment process to treat the filter-cake sludge (EPA Hazardous Waste Nos. K002–004, K006–K011, K013–K052, K060–K062, K064–K066, K069, K071, K073, K083–K088, K090–K091, K093–K118, K123–K126, K131–K133, K136, K141–K145, K147–K151, K156–K161) generated at Rhodia. Rhodia must implement the testing program described in Table 1. Waste Excluded From Non-Specific Sources for the petition to be valid.

TABLE 3.—WASTES EXCLUDED FROM COMMERCIAL CHEMICAL PRODUCTS, OFF SPECIFICATION SPECIES, CONTAINER RESIDUES, AND SOIL RESIDUES THEREOF

Facility and address	Waste description
* *	* * * * *
Rhodia, Houston,Texas	Filter-cake Sludge, (at a maximum generation of 1,200 cubic yards per calendar year) generated by Rhodia using the SARU and AWT treatment process to treat the filter-cake sludge (EPA Hazardous Waste Nos. P001–P024, P026–P031, P033–P034, P036–P051, P054, P056–P060, P062–P078, P081–P082, P084–P085, P087–P089, P092–P116, P118–P123, P127–P128, P185, P188–P192, P194, P196–P199, P201–P205, U001–U012, U014–U039, U041–U053, U055–U064, U066–U099, U101–U103, U105–U138, U140–U174, U176–U194, U196–U197, U200–U211, U213–U223, U225–U228, U234–U240, U243–U244, U246–U249, U271, U277–U280, U328, U353, U359, U364–U367, U372–U373, U375–U379, U381–U396, U400–U404, U407, U409–U411) generated at Rhodia. Rhodia must implement the testing program described in Table 1. Waste Excluded From Non-Specific Sources for the petition to be valid.
* *	* * * * *

[FR Doc. 99–26663 Filed 10–14–99; 8:45 am]

BILLING CODE 6560–50–P

DEPARTMENT OF TRANSPORTATION

Office of the Secretary

49 CFR Part 71

[OST Docket No. OST–99–5843]

RIN 2105–AC80

Relocation of Standard Time Zone Boundary in the State of Kentucky

AGENCY: Office of the Secretary, DOT.

ACTION: Notice of proposed rulemaking.

SUMMARY: In response to a petition by the Wayne County, Kentucky, Fiscal Court, the Department of Transportation (DOT) proposed to move Wayne County, Kentucky, from the Central Time Zone to the Eastern Time Zone. Originally, DOT had planned to issue a decision at the beginning of October 1999, so that if a change were adopted it would be effective on October 31, 1999, which is the ending date for daylight saving time. Because this is a very close and controversial proceeding raising novel legal issues, we will not meet our planned timetable. We will issue a decision as soon as possible. The purpose of this notice is to inform the community that now the earliest date that the proposed change might take effect is October 29, 2000.

FOR FURTHER INFORMATION CONTACT: Joanne Petrie, Office of the Assistant General Counsel for Regulation and Enforcement, U.S. Department of Transportation, Room 10424, 400 Seventh Street, SW., Washington, DC 20590, (202) 366–9315.

Issued in Washington, DC on October 8, 1999.

Rosalind Knapp,

Acting General Counsel.

[FR Doc. 99–26945 Filed 10–14–99; 8:45 am]

BILLING CODE 4910–62–P

DEPARTMENT OF THE INTERIOR

Fish and Wildlife Service

50 CFR Part 17

RIN 1018–AE30

Endangered and Threatened Wildlife and Plants; Public Hearing and Reopening of Comment Period on Proposed Critical Habitat for the Tidewater Goby

AGENCY: Fish and Wildlife Service, Interior.

ACTION: Proposed rule; notice of public hearing and reopening of comment period.

SUMMARY: We, the Fish and Wildlife Service, pursuant to the Endangered Species Act of 1973, as amended (Act), provide notice of a public hearing and reopening of the comment period on the proposed rule to designate critical habitat for the tidewater goby *Eucyclogobius newberryi*, an endangered species. The comment period is reopened to accommodate public hearing requests received from the Agua Hedionda Lagoon Foundation, the Bristol Cove Boat and Ski Club, the Bristol Cove Property Owners Association, Carlsbad Aquafarm Incorporated, Cabrillo Power I LLC, and the Hubbs Sea World Institute. Thus, we have scheduled a public hearing to be held in Carlsbad, California (see **DATES** and **ADDRESSES**). The reopening of the comment period will also allow further opportunity for all interested parties to submit comments on the proposal which is available (see **ADDRESSES**). We are seeking comments or suggestions from the public, other concerned governmental agencies, the scientific community, industry, or any other interested parties concerning the proposed designation.

DATES: The public hearing will be held on Thursday, November 4, from 1:00 p.m. to 3:00 p.m., and from 6:00 p.m. to 8:00 p.m. in Carlsbad, California. The comment period closes November 30, 1999.

ADDRESSES: The public hearing will be held at La Costa Resort, Conference Center Theater, La Costa Del Mar Road, Carlsbad, California. Comments and materials concerning this proposal should be sent to the Field Supervisor, U.S. Fish and Wildlife Service, Carlsbad Fish and Wildlife Office, 2730 Loker Avenue West, Carlsbad, California, 92008. Comments and materials received will be available for public inspection, by appointment, during normal business hours at the above address.

FOR FURTHER INFORMATION CONTACT: Glen Knowles, Carlsbad Fish and Wildlife Office (see **ADDRESSES** section) at (760) 491–9440.

SUPPLEMENTARY INFORMATION:

Background

On August 3, 1999, the service published a rule proposing critical habitat for the tidewater goby *Eucyclogobius newberryi* in the **Federal Register** (64 FR 42250), a species now classified as endangered throughout its entire range. The original comment period closed on October 4, 1999. Section 4(b)(5)(E) of the Act (16 U.S.C. 1531 *et seq.*) requires that a public hearing be held if it is requested within 45 days of the publication of the proposed rule. In response to a request for a public hearing from the Agua Hedionda Lagoon Foundation, Bristol Cove Boat and Ski Club, the Bristol Cove Property Owner's Association, Carlsbad Aquafarm Incorporated, Cabrillo Power I LLC, and the Hubbs Sea World Institute a public hearing will be held in Carlsbad, California on November 4, 1999, at the La Costa Resort, Conference Center Theater (see **ADDRESSES**). Parties wishing to make statements for the record should bring a copy of their statements to the hearing. Oral statements may be limited in length, if the number of parties present at the hearing necessitates such a limitation. There are no limits to the length of written comments or materials presented at the hearing or mailed to us. Written comments carry the same weight as oral comments. The comment period now closes on November 30, 1999. Written comments should be submitted to us at the hearing, or mailed to the Carlsbad Fish and Wildlife Office (see **ADDRESSES** section).

The tidewater goby is a small, grayish brown fish approximately 2 inches long which lives for about one year. It occurs in lagoons, tidal bays, and brackish tributaries along the California coastline. This fish is threatened by habitat loss and degradation, predation by non-native species, and extreme weather and streamflow conditions. Comments from the public regarding the accuracy of this proposed rule are sought, especially regarding:

(1) The reasons why any habitat should or should not be determined to be critical habitat as provided by section 4 of the Act, including whether the benefits of designation will outweigh any threats to the species due to designation;

(2) Specific information on the amount and distribution of tidewater goby habitat, and what habitat is essential to the conservation of the species and why;

(3) Land use practices and current or planned activities in the subject areas and their possible impacts on proposed critical habitat;

(4) Any foreseeable economic or other impacts resulting from the proposed designation of critical habitat, in particular, any impacts on small entities or families; and

(5) Economic and other values associated with designating critical habitat for the tidewater goby, such as those derived from non-consumptive

uses (*e.g.*, camping, hiking, bird-watching, enhanced watershed protection, improved air quality, increased soil retention, ''existence values,'' and reductions in administrative costs).

Author: The primary author of this notice is Glen Knowles (see **ADDRESSES** section).

Authority: The authority for this action is the Endangered Species Act of 1973 (16 U.S.C. 1531 *et seq.*).

Dated: October 10, 1999.

Elizabeth H. Stevens,

Acting Manager, California/Nevada Operations Office.

[FR Doc. 99–26787 Filed 10–14–99; 8:45 am]

BILLING CODE 4310–55–U

Notices

Federal Register

Vol. 64, No. 199

Friday, October 15, 1999

This section of the FEDERAL REGISTER contains documents other than rules or proposed rules that are applicable to the public. Notices of hearings and investigations, committee meetings, agency decisions and rulings, delegations of authority, filing of petitions and applications and agency statements of organization and functions are examples of documents appearing in this section.

ADVISORY COMMISSION ON ELECTRONIC COMMERCE

Invitation for Proposals Related to Electronic Commerce Taxes and Notice of Meeting

The purpose of this announcement is to invite interested parties to submit proposals to the Commission related to state and local taxation of Internet transactions and electronic commerce. Details pertaining to the next meeting of the Commission are also included.

The Advisory Commission on Electronic Commerce was established by Public Law 105–277 to conduct a thorough study of federal, state, local and international taxation and tariff treatment of transactions using the Internet and Internet access and other comparable intrastate, interstate or international sales activities. The Commission is to report its findings and recommendations to the Congress no later than April 21, 2000.

The Commission met in June in Williamsburg, Virginia, and in September in New York City. Notice is hereby given that the Commission will meet December 14–15, 1999, in San Francisco, California. The location and hours of the meeting and the agenda will be published when available on the Commission's Web site listed below. The final Commission meeting is scheduled for March 20–21, 2000, in Dallas, Texas.

Criteria/Standards for the Tax Treatment of Electronic Commerce and Other Remote Transactions

The Advisory Commission on Electronic Commerce was tasked with the responsibility of studying the tax treatment of electronic commerce transactions. The Commission held its second meeting in New York City on September 14–15, 1999. During this meeting, the Commission moved to establish a set of benchmarks concerning the taxation of electronic commerce, and to solicit proposals from the public that would seek to simplify state and local sales and use taxes, among other benchmarks. While a number of criteria were initially proposed during this New York meeting, the meeting concluded with the understanding that those criteria could be amended or supplemented and that additional criteria would be added immediately thereafter.

During the weeks following the conclusion of the meeting in New York, Commissioners proposed numerous changes, and the list of criteria was refined and expanded. Where possible, the Commission combined similar criteria and omitted duplicate suggestions to narrow the list.

This document reflects the priorities of the Commissioners with regard to the criteria that should be incorporated in the proposals to be selected and presented before the Commission at its December meeting in San Francisco. The decision of the Commission to use a specific list of criteria to evaluate plans to simplify state and local sales and use taxes should not be interpreted as a decision to adopt a plan to implement taxation of Internet-based transactions. While these criteria should not be considered a litmus test, each criterion will be important to certain Commissioners as they evaluate each proposal that is submitted.

The Report Drafting Subcommittee will evaluate all proposals and make recommendations to the full Commission on those proposals that should be accompanied by a formal presentation at the December 14 and 15, 1999 meeting in San Francisco.

What follows is the final list of criteria expressed in the form of questions. This form was used to encourage submitters not only to state their proposals, but also, briefly, to state how their proposals satisfy the underlying criteria. This list reflects the criteria as originally presented in New York, and encompasses all the revisions and additions that were subsequently added by individual Commissioners. All 18 criteria should be addressed in proposals submitted to the Commission for consideration. Any estimates or opinions must be substantiated. Should the Commission ultimately decide to recommend a streamlined system for the collection of sales and use taxes, such a system will be evaluated in the context of the following criteria.

Criteria for Evaluation of Alternative Proposals

Simplification

1. How does this proposal fundamentally simplify the existing system of sales tax collection (Some examples may be: common definitions, single rate per state, clarification of nexus standards, and so forth)?

2. How does this proposal define, distinguish, and propose to tax information, digital goods, and services provided electronically over the Internet?

3. How does this proposal protect against onerous and/or multiple audits?

Taxation

4. Does this proposal impose any taxes on Internet access or new taxes on Internet sales?

5. Does this proposal leave the net tax burden on consumers unchanged? (Does it impose an obligation to pay taxes where such an obligation does not exist today? Does it reduce or increase state and local telecommunication taxes? Does it reduce or increase taxes, licensing fees, or other charges on services designed or used for access to or use of the Internet?)

6. Does the proposal impose any tax, licensing or reporting requirement, collection obligation or other obligation or fee on parties other than those with a physical presence in a particular state or political subdivision?

7. What features of the proposal will impact the revenue base of federal, state, and local governments?

Burden on Sellers

8. Does this proposal remove the financial, logistical, and administrative compliance burdens of sales and use tax collections from sellers? Does the proposal include any special provisions with respect to small, medium-sized, or start-up businesses?

Discrimination

9. Does the proposal treat purchasers of like products or services in as like a manner as possible through the implementation of a policy or system that does not discriminate on the basis of how people buy?

10. Does the proposal discriminate against out-of-state or remote vendors or

among different categories of such vendors?

International

11. How does this proposal affect U.S. global competitiveness and the ability of U.S. businesses to compete in a global marketplace?

12. Can this proposal be scaled to the international level?

13. How does this proposal conform to international tax systems, including those that are based on source rather than destination? Is this proposal harmonized with the tax systems of America's trading partners?

Technology

14. Is the proposal technologically feasible utilizing widely available software to enable tax collection? If so, what are the initial costs and the costs for required updates, and who is to bear those costs?

Privacy

15. Does the proposal protect the privacy of purchasers?

Sovereignty/Local Government Autonomy

16. Does this proposal respect the sovereignty of states and Native Americans?

17. How does this proposal treat local governments' autonomy and their ability to raise a greater or lesser amount of revenues depending on the needs and desires of their citizens?

Constitutional

18. Is the proposal constitutional?

Proposals must be no longer than eight single-spaced pages in length and must be submitted in 30 copies to the Commission's offices listed below. In addition, electronic copies of submissions must be sent on a 3½ inch computer disc or CD–ROM in Microsoft Word, Excel or Power Point format, addressed to the Commission's staff offices at the location listed below. The deadline for receipt of all materials is November 15, 1999. Anyone submitting a proposal should be prepared to formally present the proposal at the Commission's meeting in San Francisco upon the Commission's request.

In addition to the above, interested persons are reminded of the general invitation to provide comments in writing to the Commission. Written comments should be provided in accordance with guidelines published in the **Federal Register** on August 13, 1999 (64 FR 44183).

Comments of a brief nature may be addressed to the Commission through its Web site at www.ecommercecommission.org.

Records shall be kept of all Commission proceedings and shall be available for public inspection given adequate notice at the Commission's offices at 3401 North Fairfax Dr., Arlington, Virginia 22201–4498. In addition, records of meetings including agendas, transcripts and minutes are posted as soon as available on the Commission's Web site.

A listing of the members of the Commission and details concerning their appointment were published in the **Federal Register** on June 9, 1999, at 64 FR 30958.

Heather Rosenker,

Executive Director.

[FR Doc. 99–27008 Filed 10–14–99; 8:45 am]

BILLING CODE 0000–00–P

DEPARTMENT OF AGRICULTURE

Animal and Plant Health Inspection Service

[Docket No. 99–005–2]

Notice of Request for Extension of Approval of an Information Collection

AGENCY: Animal and Plant Health Inspection Service, USDA.

ACTION: Extension of approval of an information collection; correction; request for comments.

SUMMARY: We are making corrections to information published in a notice that requested an extension of approval of an information collection in support of the Veterinary Accreditation Program. The notice was published in the **Federal Register** on February 26, 1999 (64 FR 9468, Docket No. 99–005–1). We are republishing the description of the information collection with corrected estimates in this document.

DATES: We invite you to comment on this docket. We will consider all comments that we receive by November 15, 1999.

ADDRESSES: Please send your comment and three copies to: Docket No. 99–005–2, Regulatory Analysis and Development PPD, APHIS, Suite 3C03, 4700 River Road, Unit 118, Riverdale, MD 20737–1238.

Please state that your comment refers to Docket No. 99–005–2.

You may read any comments that we receive on this docket in our reading room. The reading room is located in room 1141 of the USDA South Building, 14th Street and Independence Avenue, SW., Washington DC. Normal reading room hours are 8 a.m. to 4:30 p.m., Monday through Friday, except holidays. To be sure someone is there to help you, please call (202) 690–2817 before coming.

APHIS documents published in the **Federal Register**, and related information, including the names of organizations and individuals who have commented on APHIS rules, are available on the Internet at http://www.aphis.usda.gov/ppd/rad/webrepor.html.

FOR FURTHER INFORMATION CONTACT: For information regarding the Veterinary Accreditation Program, contact Dr. Quita Bowman, Program Manager, National Veterinary Accreditation Program, Operational Support, VS, APHIS, 4700 River Road Unit 33, Riverdale, MD 20737–1231; (301) 734–8093. For copies of more detailed information on the information collection, contact Ms. Cheryl Groves, APHIS' Information Collection Coordinator, at (301) 734–5086.

SUPPLEMENTARY INFORMATION: On February 26, 1999, we published in the **Federal Register** a notice that requested an extension of approval of an information collection in support of the Veterinary Accreditation Program.

In the notice, we provided a description of the information collection, which included an estimate of the burden on respondents, including estimated annual numbers of respondents, estimated annual numbers of responses per respondent, estimated annual number of responses, and estimated total annual burden on respondents.

In making the above estimates, we made an error in our calculations. In this document, we are republishing the description of the information collection with corrected estimates, and we are providing an additional 30 days for comment.

Title: Veterinary Accreditation Program.

OMB Number: 0579–0032.

Expiration Date of Approval: October 31, 1999.

Type of Request: Extension of approval of an information collection.

Abstract: The United States Department of Agriculture is responsible for preventing the spread of serious communicable animal diseases from one State to another and for eradicating such diseases from the United States when feasible.

However, because APHIS does not have sufficient personnel to perform all necessary animal disease prevention work, we rely heavily on assistance from veterinarians in the private sector.

Our Veterinary Accreditation Program authorizes private veterinary practitioners to work cooperatively with

us, as well as with State animal health officials, to carry out regulatory programs that ensure the health of the Nation's livestock and poultry.

Operating this important program requires us to engage in a number of information gathering activities including:

- Conducting veterinary accreditation orientation and training.
- Completing animal health certificates.
- Applying and removing official seals.
- Completing test reports.
- Reviewing applications for veterinary accreditation and re-accreditation.
- Recordkeeping.
- Updating information on accredited veterinarians.

We are asking the Office of Management and Budget (OMB) to approve the continued use of this information collection activity.

The purpose of this notice is to solicit comments from the public (as well as affected agencies) concerning our information collection. These comments will help us:

(1) Evaluate whether the proposed collection of information is necessary for the proper performance of the functions of the Agency, including whether the information will have practical utility;

(2) Evaluate the accuracy of our estimate of the burden of the proposed collection of information, including the validity of the methodology and assumptions used;

(3) Enhance the quality, utility, and clarity of the information to be collected; and

(4) Minimize the burden of the collection of information on those who are to respond, through use, as appropriate, of automated, electronic, mechanical, and other collection technologies, *e.g.*, permitting electronic submission of responses.

Estimate of burden: The public reporting burden for this collection of information is estimated to average 0.30516 hours per response.

Respondents: Accredited veterinarians, candidates for the Veterinary Accreditation Program, and State animal health officials who review applications for veterinary accreditation and re-accreditation.

Estimated annual number of respondents: 56,024.

Estimated annual number of responses per respondent: 3.0527.

Estimated annual number of responses: 171,024.

Estimated total annual burden on respondents: 52,190 hours. (Due to rounding, the total annual burden hours may not equal the product of the annual number of responses multiplied by the average reporting burden per response.)

All responses to this notice will be summarized and included in the request for OMB approval. All comments will also become a matter of public record.

Done in Washington, DC, this 8th day of October 1999.

Craig A. Reed,

Administrator, Animal and Plant Health Inspection Service.

[FR Doc. 99–26982 Filed 10–14–99; 8:45 am]

BILLING CODE 3410–34–U

DEPARTMENT OF AGRICULTURE

National Agricultural Statistics Service

Notice of Appointment to the Advisory Committee on Agriculture Statistics

AGENCY: National Agricultural Statistics Service, USDA.

ACTION: Notification of appointment to the Advisory Committee on Agriculture Statistics.

SUMMARY: The Office of the Secretary of Agriculture, in accordance with the Federal Advisory Committee Act, 5 U.S.C. App. 2, announces members appointed to the Advisory Committee on Agriculture Statistics. Twenty-five members were appointed from seven categories that cover a broad range of agricultural disciplines and interests.

Appointed members by categories they represent are:

Consumer and Information Organizations—Arthur R. Brown Jr., Egg Harbor, NJ; Ross Ronald Racine, Billings, MT; James Dennis Rieck, Winfield, IL. Educational Organizations—Ling-Jung (Kelvin) Koong, Corvallis, OR; Bobby Ray Phills, Tallahassee, FL; Gumecindo Salas, Springfield, VA. Farm Services Organizations—Charles Edward Adams, Senath, MO; John Irving Gifford, Rock Island, IL; Thomas Howard Kimmel, Reston, VA; Jack Charles Mitenbuler, Indianapolis, IN; Mark Edward Whalon, East Lansing, MI. Government Agencies—Robert Dale Epperson, Fresno, CA. National Farm Organizations— Carol Ann Gregg, Grove City, PA; Mark W. Jenner, Mt. Prospect, IL; Sheila Kay Massey, Animas, NM; Ivan W. Wyatt, Cedar Point, KS. Producer and Marketing Organizations—Mark Dale Lange, Germantown, TN; Andrew William LaVigne, Lakeland, FL; Edward Jerome Pennick, College Park, GA; Ashby Pamplin Ruden, Reston, VA; Lee F. Schrader, West Lafayette, IN; Topper Thorpe, Castle Rock, CO; Hugh Anslum Warren, Greenwood, MS. Professional Organizations—Walter J. Armbruster, Darien, IL; Ronald C. Wimberley, Raleigh, NC.

Comments: The duties of the Committee are solely advisory. The Committee will make recommendations to the Secretary of Agriculture with regards to the agricultural statistics program of the National Agricultural Statistics Service (NASS) and such other matters as it may deem advisable, or which the Secretary of Agriculture, Under Secretary for Research, Education, and Economics, or the Administrator of NASS may request. The Advisory Committee's first meeting will take place before the end of the 1999 calendar year. All meetings are open to the public. Committee members will be reimbursed for official travel expenses only.

ADDITIONAL INFORMATION: Questions should be e-mailed to hq__aa@nass.usda.gov, faxed to (202) 720–9013, OR telephoned to Rich Allen, Associate Administrator, NASS, at (202) 720–4333. All mailed correspondence should be sent to Rich Allen, Associate Administrator, U.S. Department of Agriculture, National Agricultural Statistics Service, 1400 Independence Avenue SW, Room 4117 South Building, Washington, DC 20250–2000.

Signed at Washington, D.C., September 28, 1999.

Donald M. Bay,

Administrator, National Agricultural Statistics Service.

[FR Doc. 99–26924 Filed 10–14–99; 8:45 am]

BILLING CODE 3410–20–P

DEPARTMENT OF AGRICULTURE

Natural Resources Conservation Service

Task Force on Agricultural Air Quality

AGENCY: Natural Resources Conservation Service (NRCS).

ACTION: Notice of meeting.

SUMMARY: The Task Force on Agricultural Air Quality will meet for the first time in FY 2000 to discuss the relationship between agricultural production and air quality. Special emphasis will be placed on promoting a greater understanding of agriculture's impact on air quality and the role it plays in the local and national economy. The meeting is open to the public.

DATES: The meeting will convene Tuesday, November 9, 1999 at 9 a.m. and continue until 5 p.m. The meeting will resume Wednesday, November 10,

1999 from 9 a.m. to 4 p.m. Written material and requests to make oral presentations should reach the Natural Resources Conservation Service on or before November 1, 1999.

ADDRESSES: The meeting will be held at the Doubletree Guest Suites, 2515 Meridian Parkway, Durham, NC 27713, telephone (919) 361–4660. Written material and requests to make oral presentations should be sent to George Bluhm, University of California, Land, Air, and Water Resources, 151 Hoagland Hall, Davis, CA 95616–6827.

FOR FURTHER INFORMATION: Questions or comments should be directed to George Bluhm, Designated Federal Official, telephone (530) 752–1018, fax (530) 752–1552, e-mail bluhm@crocker.ucdavis.edu.

SUPPLEMENTARY INFORMATION: Notice of this meeting is given under the Federal Advisory Committee Act, 5 U.S.C. App. 2. Additional information about the Task Force on Agricultural Air Quality, including any revised agendas for the November 9 and 10, 1999 meeting that may appear after this **Federal Register** Notice is published, may be found on the World Wide Web at http://www.nhq.nrcs.usda.gov/faca/aaqtf.html.

Draft Agenda of the November 9 and 10, 1999 Meeting

A. Welcome to North Carolina by State and local officials
B. Fire Emission Joint Forum, Peter Lahm, FS
C. EPA Update, Sally Shaver, EPA
  1. PM health effects
  2. EPA research update
  3. Technical tools—Monitoring, modeling and inventories
  4. Regional haze rule
  5. NAAQS litigation
  6. Air toxics
D. Business, Pearlie Reed, Chief, NRCS and Chairman, AAQTF
  1. Approve minutes of the June 22 and 24, 1999 AAQTF meeting
  2. Voluntary program subcommittee report, Calvin Parnell, Acting Chairman
  3. Agricultural burning subcommittee report, Robert Quinn, Chairman
  4. Research priorities and oversight subcommittee report, Dennis Trotter, Chairman
  5. Confined animals and emission factors subcommittee report, John Sweeten, Chairman
  6. Monitoring and health effects subcommittee report, Phillip Wakelyn, Chairman
E. Set date and location for next meetings

Procedural

This meeting is open to the public. At the discretion of the Chair, members of the public may present oral presentations during the November 9 and 10, 1999 meeting. Persons wishing to make oral presentations should notify George Bluhm no later than November 1, 1999. If a person submitting material would like a copy distributed to each member of the committee in advance of the meeting, that person should submit 25 copies to George Bluhm no later than November 1, 1999.

Information on Services for Individuals With Disabilities

For information on facilities or services for individuals with disabilities or to request special assistance at the meeting, contact George Bluhm as soon as possible.

Dated: October 7, 1999.

Lawrence E. Clark,

Deputy Chief for Science and Technology, Natural Resources Conservation Service.

[FR Doc. 99–26925 Filed 10–14–99; 8:45 am]

BILLING CODE 3410–16–P

COMMITTEE FOR PURCHASE FROM PEOPLE WHO ARE BLIND OR SEVERELY DISABLED

Procurement List; Proposed Addition

AGENCY: Committee for Purchase From People Who Are Blind or Severely Disabled.

ACTION: Proposed addition to Procurement List.

SUMMARY: The Committee has received a proposal to add to the Procurement List a service to be furnished by nonprofit agencies employing persons who are blind or have other severe disabilities.

COMMENTS MUST BE RECEIVED ON OR BEFORE: November 15, 1999.

ADDRESSES: Committee for Purchase From People Who Are Blind or Severely Disabled, Crystal Gateway 3, Suite 310, 1215 Jefferson Davis Highway, Arlington, Virginia 22202–4302.

FOR FURTHER INFORMATION CONTACT: Beverly Milkman (703) 603–7740.

SUPPLEMENTARY INFORMATION: This notice is published pursuant to 41 U.S.C. 47(a)(2) and 41 CFR 51–2.3. Its purpose is to provide interested persons an opportunity to submit comments on the possible impact of the proposed actions.

If the Committee approves the proposed addition, all entities of the Federal Government (except as otherwise indicated) will be required to procure the service listed below from nonprofit agencies employing persons who are blind or have other severe disabilities.

I certify that the following action will not have a significant impact on a substantial number of small entities. The major factors considered for this certification were:

1. The action will not result in any additional reporting, recordkeeping or other compliance requirements for small entities other than the small organizations that will furnish the service to the Government.

2. The action will result in authorizing small entities to furnish the service to the Government.

3. There are no known regulatory alternatives which would accomplish the objectives of the Javits-Wagner-O'Day Act (41 U.S.C. 46–48c) in connection with the service proposed for addition to the Procurement List. Comments on this certification are invited. Commenters should identify the statement(s) underlying the certification on which they are providing additional information.

The following service has been proposed for addition to Procurement List for production by the nonprofit agencies listed:

Laundry/Dry Cleaning

Camp Pendleton Marine Corps Base, Camp Pendleton, California
NPA: Job Options, Inc., San Diego, California

Beverly L. Milkman,

Executive Director.

[FR Doc. 99–26988 Filed 10–14–99; 8:45 am]

BILLING CODE 6353–01–P

COMMITTEE FOR PURCHASE FROM PEOPLE WHO ARE BLIND OR SEVERELY DISABLED

Procurement List; Additions

AGENCY: Committee for Purchase From People Who Are Blind or Severely Disabled.

ACTION: Additions to the Procurement List.

SUMMARY: This action adds to the Procurement List services to be furnished by nonprofit agencies employing persons who are blind or have other severe disabilities.

EFFECTIVE DATE: November 15, 1999.

ADDRESSES: Committee for Purchase From People Who Are Blind or Severely Disabled, Crystal Gateway 3, Suite 310, 1215 Jefferson Davis Highway, Arlington, Virginia 22202–4302.

FOR FURTHER INFORMATION CONTACT: Beverly Milkman (703) 603–7740.

SUPPLEMENTARY INFORMATION: On October 16, 1998, and August 13, and 20, 1999, the Committee for Purchase From People Who Are Blind or Severely Disabled published notices (63 FR 55577, 64 FR 44198 and 45506) of proposed additions to the Procurement List.

After consideration of the material presented to it concerning capability of qualified nonprofit agencies to provide the services and impact of the additions on the current or most recent contractors, the Committee has determined that the services listed below are suitable for procurement by the Federal Government under 41 U.S.C. 46–48c and 41 CFR 51–2.4.

I certify that the following action will not have a significant impact on a substantial number of small entities. The major factors considered for this certification were:

1. The action will not result in any additional reporting, recordkeeping or other compliance requirements for small entities other than the small organizations that will furnish the services to the Government.

2. The action will not have a severe economic impact on current contractors for the services.

3. The action will result in authorizing small entities to furnish the services to the Government.

4. There are no known regulatory alternatives which would accomplish the objectives of the Javits-Wagner-O'Day Act (41 U.S.C. 46–48c) in connection with the services proposed for addition to the Procurement List.

Accordingly, the following services are hereby added to the Procurement List:

Base Supply Center and Operation of Individual Equipment Element Store, Barksdale Air Force Base, Louisiana

Food Service

Marine Corps Barracks, 8th & I Streets, Washington, DC

Food Service

Marine Corps, Mess Hall #MCA 602, Norfolk, Virginia

Operation of Individual Equipment Element Store, Whiteman Air Force Base, Missouri

This action does not affect current contracts awarded prior to the effective date of this addition or options that may be exercised under those contracts.

Beverly L. Milkman,

Executive Director.

[FR Doc. 99–26989 Filed 10–14–99; 8:45 am]

BILLING CODE 6353–01–P

DEPARTMENT OF COMMERCE

Submission for OMB Review; Comment Request

The Department of Commerce (DOC) has submitted to the Office of Management and Budget (OMB) for clearance the following proposal for collection of information under the provisions of the Paperwork Reduction Act (44 U.S.C. Chapter 35).

Agency: Patent and Trademark Office (PTO).

Title: Admittance to Practice and Roster of Registered Patent Attorneys and Agents Admitted to Practice Before the Patent and Trademark Office.

Form Numbers: Form PTO–158/158A/275/107A.

Agency Approval Number: 0651–0012.

Type of Request: Reinstatement, with change, of an information collection.

Burden: 3,557 hours per year.

Number of Respondents: 8,100 responses per year.

Avg. Hours Per Response: The PTO estimates that it takes the public 30 minutes to gather the information, prepare the forms and additional materials (if applicable), and submit the two applications for registration to practice before the PTO. Although some applicants may be able to complete the application for registration by a foreign resident in less time, the PTO has found that it takes the majority of applicants 30 minutes to complete this application. For the undertaking and data sheet, the PTO estimates that it will take the public 20 minutes to gather the information, prepare the forms and additional materials (if applicable) and submit them to the PTO.

Needs and Uses: This collection of information is required by 35 U.S.C. §§ 31 and 37 CFR 10.5 through 10.19. The public uses the forms in this information collection to apply for the examination for registration, to ensure that all of the necessary information is provided to the PTO, and to request inclusion on the Register of Patent Attorneys and Agents. The PTO has created a separate application form for foreign applicants to use to apply for registration and to ensure that all of the necessary information is provided to the PTO. This form makes the application process easier and more efficient because the PTO does not require foreign applicants to supply the same amount of information as domestic applicants. This information collection also provides a form for former employees of the PTO who are applying for the examination for registration to use to certify in writing that they will not aid in the prosecution or preparation of any papers or applications associated with applications reviewed while in the employ of the PTO. The PTO uses this information (through the Office of Enrollment and Discipline) to determine if the applicant for registration is of good moral character and repute; has the necessary legal, scientific, and technical qualifications; and is otherwise competent to advise and assist applicants in the presentation and prosecution of applications for patent grants.

Affected Public: Individuals or households, businesses or other for-profit, Federal government, and state, local or tribal government.

Frequency: On occasion.

Respondent's Obligation: Required to obtain or retain benefits.

OMB Desk Officer: Peter Weiss, (202) 395–3630.

Copies of the above information collection proposal can be obtained by calling or writing Linda Engelmeier, Departmental Forms Clearance Officer, (202) 482–3272, Office of the Chief Information Officer, Department of Commerce, Room 5033, 14th and Constitution Avenue, NW, Washington, DC 20230.

Written comments and recommendations for the proposed information collection should be sent within 30 days of publication to Peter Weiss, OMB Desk Officer, Room 10236, New Executive Office Building, 725 17th Street, N.W., Washington, D.C. 20503.

Dated: October 6, 1999.

Linda Engelmeier,

Departmental Forms Clearance Officer, Office of the Chief Information Officer.

[FR Doc. 99–26928 Filed 10–14–99; 8:45 am]

BILLING CODE 3510–16–P

DEPARTMENT OF COMMERCE

Bureau of the Census

Census Advisory Committees on the African American Population, the American Indian and Alaska Native Populations, the Asian and Pacific Islander Populations, and the Hispanic Population

AGENCY: Bureau of the Census, Commerce.

ACTION: Notice of public meeting.

SUMMARY: Pursuant to the Federal Advisory Committee Act (Public Law 92–463 as amended by Pub. L. 94–409, Pub. L. 96–523, and Pub. L. 97–375), we are giving notice of a joint meeting

followed by separate and concurrently held meetings of the Census Advisory Committees (CACs) on the African American Population, the American Indian and Alaska Native Populations, the Asian and Pacific Islander Populations, and the Hispanic Population. The **SUPPLEMENTARY INFORMATION** section provides general information about the meeting agenda.

DATES: November 4–5, 1999. The November 4 meeting will begin at 8:45 a.m. and end approximately at 5:15 p.m. The November 5 meeting will begin at 8:45 a.m. and end approximately at 4:30 p.m. Last minute changes to the schedule are possible, and they could prevent us from giving advance notice.

ADDRESSES: The meeting will take place at the Holiday Inn Hotel and Suites, 625 First Street, Alexandra, VA 22314.

FOR FURTHER INFORMATION CONTACT: Maxine Anderson-Brown, Committee Liaison Officer, Department of Commerce, Bureau of the Census, Room 1647, Federal Building 3, Washington, DC 20233, telephone 301–457–2308, TDD 301–457–2540.

SUPPLEMENTARY INFORMATION: The agenda for the November 4 and 5 combined meeting will include updates on the following:

- Census 2000 key operations.
- Census 2000 field operations.
- Census 2000 paid advertising campaign and promotional activities.
- Census 2000 data for redistricting.
- Census 2000 data products.
- Census 2000 partnership activities.

The four committees will meet separately and concurrently for sessions on both November 4 and 5.

The agenda (November 4) for the CAC on the African American Population will include the following:

- Review of Committee recommendations and responses.
- Update on Census Information Centers.
- Review of Census activities of members.
- Update on field operations.
- Update on community events.
- Report from Working Group on Race and Ethnic Tabulations.
- Review of topics for the following day.

The agenda (November 4) for the CAC on the American Indian and Alaska Native Populations will include the following:

- Review of Committee recommendations and responses.
- Update on Census Information Centers.
- Update on sampling and estimation procedures.
- Report on status of recruitment efforts.
- Update on ''policy of use'' of American Indian names and mascots.
- Update on coding procedures for American Indian tribes.
- Report from the Working Group on Race and Ethnic Tabulations.
- Review of topics for the following day.

The agenda (November 4) for the CAC on the Asian and Pacific Islander Populations and/or its Subcommittees will include the following:

- Review of Committee recommendations and responses.
- Update on the language program.
- Update on recruitment and hiring.
- Update on Hawaiian Homelands.
- Update on community events.
- Report from the Working Group on Race and Ethnic Tabulations.
- Review of topics for the following day.

The agenda (November 4) for the CAC on the Hispanic Population will include the following:

- Review of Committee recommendations and responses.
- Update on Census Information Centers.
- Update on staffing.
- Update on plans to evaluate the language program.
- Update on Community events.
- Report from the Working group on Race and Ethnic Tabulations.
- Review of topics for the following day.

On November 5, each of the Committees will address draft recommendations and any other topics identified the previous day.

The CACs on the African American, American Indian and Alaska Native, and Hispanic Populations are comprised of nine members each. The Asian and Pacific Islander Committee is comprised of 13 members distributed between two subcommittees—the Asian Subcommittee consisting of eight members and the Native Hawaiian and Other Pacific Islander Subcommittee consisting of five members. The Secretary of Commerce appoints the members. The Committees provide a channel of communication between the representative communities and the Bureau of the Census. They assist the Bureau in its efforts to reduce the count differential for Census 2000 and advise on ways that census data can best be disseminated to communities and other users.

The Committees will provide advice and recommendations for the implementation and evaluation phases of Census 2000. To do so, they will draw on several items including past experience with the 1990 census process and procedures, the results of evaluations and research studies, and the expertise and insight of their members.

All meetings are open to the public, and a brief period will be set aside on November 5 for public comment and questions. Individuals with extensive questions or statements must submit them in writing to the Committee Liaison Officer, named above, at least three days before the meeting.

These meetings are physically accessible to people with disabilities. Requests for sign language interpretation or other auxiliary aids should be directed to the Committee Liaison Officer.

Dated: October 12, 1999.

Kenneth Prewitt,

Director, Bureau of the Census.

[FR Doc. 99–26961 Filed 10–14–99; 8:45 am]

BILLING CODE 3510–07–P

DEPARTMENT OF COMMERCE

Bureau of the Census

Census Advisory Committee on the American Indian and Alaska Native Populations

AGENCY: Bureau of the Census, Commerce.

ACTION: Notice of public meeting.

SUMMARY: Pursuant to the Federal Advisory Committee Act (Pub. L. 92–463 as amended by Pub. L. 94–409, Pub. L. 96–523, and Pub. L. 97–375), we are giving notice of a meeting of the Census Advisory Committee on the American Indian and Alaska Native Populations. The meeting will focus on updates and plans related to the enumeration of the American Indian and Alaska Native Populations, particularly in American Indian and Alaska Native areas. This meeting also will include summary reports on the ongoing American Indian and Alaska Native Regional Meeting and on Census 2000 promotional activities with the American Indian and Alaska Native Populations.

DATES: November 3, 1999. The meeting will begin at 12:30 p.m. and end at approximately 5:15 p.m.

ADDRESSES: The meeting will take place at the Holiday Inn Hotel and Suites, 625 First Street, Alexandria, VA 22314.

FOR FURTHER INFORMATION CONTACT: Maxine Anderson-Brown, Committee Liaison Officer, Department of Commerce, Bureau of the Census, Room 1647, Federal Building 3, Washington, DC 20233, telephone 301–457–2308, TDD 301–457–2540.

SUPPLEMENTARY INFORMATION: The Committee is composed of nine

members appointed by the Secretary of Commerce. The Committee provides a channel of communication between the representative communities and the Bureau of the Census. The Committee assists the Bureau in its efforts to reduce the count differential for Census 2000 and advises on ways that decennial census data can best be disseminated to communities and other users.

The Committee will provide advice and recommendations for the implementation and evaluation phases of Census 2000. To do so, they will draw on several items including past experience with the 1990 census process and procedures, the results of evaluations and research studies, and the expertise and insight of their members.

The meeting is open to the public, and a brief period is set aside during the closing session for public comment and questions. Those persons with extensive questions or statements must submit them in writing to the Census Bureau Committee Liaison Officer, named above, at least three days before the meeting.

This meeting is physically accessible to people with disabilities. Requests for sign language interpretation or other auxiliary aids should be directed to the Census Bureau Committee Liaison Officer.

Dated: October 12, 1999.

Kenneth Prewitt,

Director, Bureau of Census.

[FR Doc. 99–26960 Filed 10–14–99; 8:45 am]

BILLING CODE 3510–07–P

DEPARTMENT OF COMMERCE

National Oceanic and Atmospheric Administration

[I.D. 101299C]

Fishing Vessel Capital Construction Fund Deposit/Withdrawal Report

AGENCY: National Oceanic and Atmospheric Administration, Department of Commerce.

ACTION: Proposed Collection; comment request.

SUMMARY: The Department of Commerce, as part of its continuing effort to reduce paperwork and respondent burden, invites the general public and other Federal agencies to take this opportunity to comment on proposed and/or continuing information collections, as required by the Paperwork Reduction Act of 1995, Public Law 104–13 (44 U.S.C. 3506(c)(2)(A)).

DATES: Written comments must be submitted on or before December 14, 1999.

ADDRESSES: Direct all written comments to Linda Engelmeier, Departmental Forms Clearance Officer, Department of Commerce, Room 5327, 14th and Constitution Avenue NW, Washington DC 20230 (or via Internet at LEngelme@doc.gov).

FOR FURTHER INFORMATION CONTACT: Requests for additional information or copies of the information collection instrument(s) and instructions should be directed to Charles L. Cooper, Financial Services Division, Office of Sustainable Fisheries, National Marine Fisheries Service, 1315 East West Highway, Silver Spring, Maryland 20910, 301–713–2396.

SUPPLEMENTARY INFORMATION:

I. Abstract

Respondents will be commercial fishing industry individuals, partnerships, and corporations which entered into Capital Construction Fund agreements with the Secretary of Commerce allowing deferral of Federal taxation on fishing vessel income deposited into the fund for use in the acquisition, construction, or reconstruction of fishing vessels. Deferred taxes are recaptured by reducing an agreement vessel's basis for depreciation by the amount withdrawn from the fund for its acquisition, construction, or reconstruction. The deposit/withdrawal information collected from agreement holders is required pursuant to 50 CFR 259.35 and P.L. 99–514 (The Tax Reform Act, 1986). The information collected is required to ensure that agreement holders are complying with fund deposit/withdrawal requirements established in program regulations and properly accounting for fund activity on their Federal income tax returns. The information collected must also be reported annually to the Secretary of Treasury in accordance with the Tax Reform Act, 1986.

II. Method of Collection

The information will be collected on the Capital Construction Fund Deposit/Withdrawal Report form, which agreement holders are required to submit at the end of their tax year.

III. Data

OMB Number: 0648–0041

Form Number: NOAA Form 34–82

Type of Review: Regular submission

Affected public: Business and other for-profit (commercial fishermen, partnerships, and corporations)

Estimated Number of Respondents: 4,000

Estimated Time Per Response: 20 minutes

Estimated Total Annual Burden Hours: 1,650

Estimated Total Annual Cost to Public: $2,000

IV. Request for Comments

Comments are invited on: (a) Whether the proposed collection of information is necessary for the proper performance of the functions of the agency, including whether the information shall have practical utility; (b) the accuracy of the agency's estimate of the burden (including hours and cost) of the proposed collection of information; (c) ways to enhance the quality, utility, and clarity of the information to be collected; and (d) ways to minimize the burden of the collection of information on respondents, including through the use of automated collection techniques or other forms of information technology.

Comments submitted in response to this notice will be summarized and /or included in the request for OMB approval of this information collection; they also will become a matter of public record.

Dated: October 7, 1999.

Linda Engelmeier,

Departmental Forms Clearance Officer, Office of Chief Information Officer.

[FR Doc. 99–27014 Filed 10–14–99; 8:45 am]

BILLING CODE 3510–22–F

DEPARTMENT OF COMMERCE

National Oceanic and Atmospheric Administration

[I.D. 101299B]

Atlantic Highly Migratory Species Vessel Logbooks

AGENCY: National Oceanic and Atmospheric Administration, Department of Commerce.

ACTION: Proposed Collection; comment request.

SUMMARY: The Department of Commerce, as part of its continuing effort to reduce paperwork and respondent burden, invites the general public and other Federal agencies to take this opportunity to comment on proposed and/or continuing information collections, as required by the Paperwork Reduction Act of 1995, Public Law 104–13 (44 U.S.C. 3506(c)(2)(A)).

DATES: Written comments must be submitted on or before December 14, 1999.

ADDRESSES: Direct all written comments to Linda Engelmeier, Departmental Forms Clearance Officer, Department of Commerce, Room 5327, 14th and Constitution Avenue NW, Washington DC 20230.

FOR FURTHER INFORMATION CONTACT: Requests for additional information or copies of the information collection instrument(s) and instructions should be directed to Christopher Rogers, Highly Migratory Species Management Division (F/SF1), Office of Sustainable Fisheries, NMFS, 1315 East-West Highway, Silver Spring, MD 20910; (301) 713–2347.

SUPPLEMENTARY INFORMATION:

I. Abstract

Under the provisions of the Magnuson-Stevens Fishery Conservation and Management Act (16 U.S.C. 1801 *et seq.*), NOAA is responsible for management of the Nation's marine fisheries. In addition, NOAA must comply with the United States' obligations under the Atlantic Tunas Convention Act of 1975 (16 U.S.C. 971 *et seq.*). The National Marine Fisheries Service (NMFS) collects information via vessel logbooks to monitor the U.S. catch of swordfish, sharks and bluefin tuna in relation to the quotas, thereby ensuring that the United States complies with its international obligations to the International Commission for the Conservation of Atlantic Tunas (ICCAT). The information supplied through vessel logbooks also provides the catch and effort data necessary to assess the status of Atlantic highly migratory species (HMS) resources. Stock assessments are conducted and presented to ICCAT periodically and provide, in part, the basis for ICCAT management recommendations which become binding on member nations. Supplementary information on fishing costs and earnings has been collected via the HMS vessel logbook program on a voluntary basis. This economic information enables NMFS to assess the economic impacts of regulatory programs on small businesses and fishing communities. Given the need for more representative data and more complete analyses, NMFS proposes to make the cost/earnings summary a mandatory requirement of the HMS logbook program.

II. Method of Collection

Vessel operators who are issued a limited access permit in the swordfish or shark fisheries are required to complete vessel logbooks for all trips targeting HMS. In addition, selected tuna vessels (10 percent of permitted fleet) will be required to complete logbooks. Under this revised collection, the cost/earnings summary of the logbook would be required for selected vessels after all trips targeting HMS.

III. Data

OMB Number: 0648–0371

Form Number: NOAA Form 88–191

Type of Review: Regular submission

Affected public: Business or other for-profit (vessel operators)

Estimated Number of Respondents: 3,540

Estimated Time Per Response: 10 minutes for cost/earnings summaries attached to logbook reports.

Estimated Total Annual Burden Hours: 1,946 (these would be the increase in burden above the 9,481 hours previously approved for this collection).

Estimated Total Annual Cost to Public: $0 (no capital expenditures required).

IV. Request for Comments

Comments are invited on: (a) Whether the proposed collection of information is necessary for the proper performance of the functions of the agency, including whether the information shall have practical utility; (b) the accuracy of the agency's estimate of the burden (including hours and cost) of the proposed collection of information; (c) ways to enhance the quality, utility, and clarity of the information to be collected; and (d) ways to minimize the burden of the collection of information on respondents, including through the use of automated collection techniques or other forms of information technology.

Comments submitted in response to this notice will be summarized and/or included in the request for OMB approval of this information collection; they also will become a matter of public record.

Dated: October 7, 1999.

Linda Engelmeier,

Departmental Forms Clearance Officer, Office of Chief Information Officer.

[FR Doc. 99–27015 Filed 10–14–99; 8:45 am]

BILLING CODE 3510–22–F

DEPARTMENT OF COMMERCE

National Oceanic and Atmospheric Administration

[I.D. 101299D]

Submission for OMB Review; Comment Request

The Department of Commerce (DOC) has submitted to the Office of Management and Budget (OMB) for clearance the following proposal for collection of information under the provisions of the Paperwork Reduction Act (44 U.S.C. Chapter 35).

AGENCY: National Oceanic and Atmospheric Administration.

Title: Bluefin Tuna Dealer Reporting Package.

Agency Form Number: NOAA 88–144.

OMB Approval Number: 0648–0239.

Type of Request: Revision of a currently approved collection.

Burden: 433 hours.

Number of Respondents: 500 (multiple responses).

Avg. Hours Per Response: Varies between 1 minute and 43 minutes depending on the requirement.

Needs and Uses: The purpose of these requirements is to comply with U.S. obligations under the Magnuson-Stevens Fishery Conservation and Management Act and the Atlantic Tunas Convention Act (ATCA). The ATCA requires the Secretary of Commerce to promulgate regulations adopted by the International Commission for the Conservation of Atlantic Tunas. The information requirements serve three purposes: (1) provides stock assessment and research information, (2) monitors landings so the country quota will not be exceeded, and (3) verifies Atlantic and Pacific bluefin tuna export shipments in conjunction with the Bluefin Tunas Statistical Document program.

Affected Public: Businesses or other for-profit organizations.

Frequency: On occasion, bi-weekly, recordkeeping.Respondent's Obligation: Mandatory.

OMB Desk Officer: David Rostker, (202) 395–3897.

Copies of the above information collection proposal can be obtained by calling or writing Linda Engelmeier, DOC Forms Clearance Officer, (202) 482–3272, Department of Commerce, Room 5027, 14th and Constitution Avenue, NW., Washington, D.C. 20230 (or via the Internet at LEngelme@doc.gov).

Written comments and recommendations for the proposed information collection should be sent within 30 days of publication to David

Rostker, OMB Desk Officer, Room 10202, New Executive Office Building, 725 17th Street, NW., Washington, D.C. 20503.

Dated: October 8, 1999.

Linda Engelmeier,

Departmental Forms Clearance Officer, Office of the Chief Information Officer.

[FR Doc. 99–27013 Filed 10–14–99; 8:45 am]

BILLING CODE 3510–22–F

DEPARTMENT OF COMMERCE

National Oceanic and Atmospheric Administration

[I.D. 101299A]

Submission for OMB Review; Comment Request

The Department of Commerce (DOC) has submitted to the Office of Management and Budget (OMB) for clearance the following proposal for collection of information under the provisions of the Paperwork Reduction Act (44 U.S.C. Chapter 35).

Agency: National Oceanic and Atmospheric Administration.

Title: Individual Fishing Quotas for Pacific Halibut and Sablefish in the Alaska Fisheries.

Agency Form Number: None.

OMB Approval Number: 0648–0272.

Type of Request: Existing collection in use without an OMB approval number.

Burden: 22,775 hours total but 4,005 hours for the requirements being approved.

Number of Respondents: 6,700 (multiple responses).

Avg. Hours Per Response: Varies between 5 minutes and 30 minutes depending on the requirement.

Needs and Uses: Participation in the U.S. groundfish fisheries in the exclusive economic zone off Alaska grew faster than anticipated after the cessation of the foreign groundfish harvesting operations. The rapid expansion in the U.S. fishery placed increased pressure on the resource and eventually led to overcapitalization and a dangerous ''race for fish'' in the groundfish fisheries off Alaska. To prevent this, an Individual Fishing Quota Program for fixed gear Pacific halibut and sablefish fisheries off Alaska Was established. This request is for the requirements established to administer this program including, but not limited to, vessel clearance and departure reports, dockside sales receipts, transshipment authorization, shipment reports, and requests for administrative waivers.

Affected Public: Individuals or household, businesses or other for-profit organizations.

Frequency: On occasion, recordkeeping.Respondent's Obligation: Mandatory.

OMB Desk Officer: David Rostker, (202) 395–3897.

Copies of the above information collection proposal can be obtained by calling or writing Linda Engelmeir, DOC Forms Clearance Officer, (202) 482–3272, Department of Commerce, Room 5027, 14th and Constitution Avenue, NW., Washington, D.C. 20230 (or via the Internet at LEngelme@doc.gov).

Written comments and recommendations for the proposed information collection should be sent within 30 days of publication to David Rostker, OMB Desk Officer, Room 10202, New Executive Office Building, 725 17th Street, NW., Washington, D.C. 20503.

Dated: October 6, 1999.

Linda Engelmeier,

Departmental Forms Clearance Officer, Office of the Chief Information Officer.

[FR Doc. 99–27016 Filed 10–14–99; 8:45 am]

BILLING CODE 3510–22–F

DEPARTMENT OF COMMERCE

National Oceanic and Atmospheric Administration (NOAA)

[Docket No. 990921258–9258–01]

National Weather Service (NWS) Modernization and Associated Restructuring; Final Certification of No Degradation of Service for the Combined Consolidation, Automation, and Closure of the Victoria, TX, Weather Service Office (WSO)

AGENCY: NWS, NOAA, Commerce.

ACTION: Notice.

SUMMARY: On October 7, 1999, the Under Secretary of Commerce for Oceans and Atmosphere transmitted to Congress a notice of consolidation, automation, and closure certification for WSO Victoria, Texas. Public Law 102–567 requires the final certifications be published in the FR. This notice satisfies that requirement.

EFFECTIVE DATE: October 15, 1999.

ADDRESSES: Requests for copies of the final certification package should be sent to Tom Beaver, Room 11426, 1325 East-West Highway, Silver Spring, Maryland 20910–3283.

FOR FURTHER INFORMATION CONTACT: Tom Beaver at 301–713–0300 ext. 136.

SUPPLEMENTARY INFORMATION: The WSO Victoria, Texas, consolidation certification was proposed in the April 11, 1997, FR, Vol 62, No. 70, page 17785. The 60-day public comment period closed on June 10, 1997. No public comments were received. At its June 25, 1997, meeting, the Modernization Transition Committee (MTC) endorsed the WSO Victoria consolidation certification as not resulting in a degradation of service. The automation and closure certifications for WSO Victoria, Texas, were proposed in the October 2, 1997, FR, Vol 62, No. 191, pages 51644–51655. The 60-day public comment period closed on December 1, 1997. Nineteen individual letters and over 2100 forms were received. See attached summary of public comments and NWS response.

At its December 10, 1997, meeting, the MTC endorsed the WSO Victoria automation and closure certifications as not resulting in a degradation of service. While the MTC endorsed the certifications, it was concerned about the number of comments reporting time delays in receiving NWS products. The MTC stated, ''The MTC received a briefing from the Meteorologist-in-Charge (MIC) of the Corpus Christi NEXRAD Weather Service Office, which has service responsibility for the Victoria area. The MTC notes that the MIC has met with the Victoria community on several occasions and attempted to rectify the problem, but believes that further efforts are needed. The MTC requests an update on NWS efforts in 6 months time.''

On March 18, 1998, the MTC heard public comments from representatives of the Victoria, Texas, community and the NWS. The MTC rescinded its endorsement of the certifications for WSO Victoria and agreed to hold its June meeting in Victoria, Texas, to gather additional information.

On June 18, 1998, the MTC met in Victoria, Texas, listened to public comments, and tabled further consideration of the consolidation, automation, and closure certifications pending responses to issues it identified concerning community outreach, the Automated Surface Observing System, and local infrastructure.

On September 30, 1998, the MTC heard responses from the community and the NWS concerning the issues identified at the June 18, 1998, MTC meeting. The MTC also reviewed correspondence and received presentations from individuals representing Senators Phil Gramm and Kay Bailey Hutchison and Representatives Ron Paul and Pete Sessions. Based on all the information received, the MTC endorsed and

recommended approval of the consolidation, automation, and closure certifications for WSO Victoria, Texas.

In January 1999, the Victoria Chamber of Commerce sent the Secretary of Commerce a position paper regarding NWS's performance during the October 1998 flood event in south Texas. The position paper stated NWS's poor performance in forecasting the flood could be attributed to not having a fully operational weather office in Victoria.

In February 1999, NWS completed a service assessment report on the south Texas flood. The service assessment revealed the problems encountered were due to the record flooding and loss of upstream river gauges. Having a fully operational Victoria weather office would not have changed the outcome because flood forecasts for the Victoria area are generated by the River Forecast Center in Fort Worth, Texas.

After consideration of public comments received, MTC endorsements, the Victoria Chamber of Commerce's position paper, and the NWS service assessment, the Under Secretary of Commerce for Oceans and Atmosphere approved the WSO Victoria, Texas, consolidation, automation, and closure certifications and transmitted notice of the certifications and transmitted notice of the certifications to Congress on October 7, 1999. Certification approval authority was delegated from the Secretary of Commerce to the Under Secretary in June 1996. The NWS is not completing the certification requirements of Public Law 102–567 by publishing the final consolidation, automation, and closure certification notice in the FR.

Dated: October 12, 1999.

John J. Kelly, Jr.,

Assistant Administrator for Weather Services.

Summary of Public Comments and NWS Response

Public Comments on WSO Victoria, Texas: Nineteen individual letters and over 2100 forms were received as public comments from the Victoria, Texas, area. Many of the public comments referred to delays in receiving warnings or missing information. Some of the comments included the following:

''Delays in warnings—During several periods of severe weather, warnings were not issued on the radio or television broadcasts until thirty minutes after the warnings were issued * * *. Current conditions, forecasts, and updates have been delayed by as much as four hours.''

''Time is a big factor in weather, without local radar coverage and up to date information. Time is against us. A lot of people would be sitting ducks without protection.''

''Just for one example, we remember a fast developing heavy storm with hail, last spring, that came across from Goliad Co. to DeWitt Co. Area and our local TV weather forecasting could not even inform us until it was upon us.''

''Often we have received information that is inaccurate, late or even no information about weather events in our area from the Corpus Christi office.''

NWS Response: The Corpus Christi forecast office has and will continue to work closely with the Victoria media, emergency managers, and civic leaders to maintain and enhance lines of communication. Close working relationships have been established with key members of the media, such as TV25, radio station KVIC, and the *Victoria Advocate.* NWS staff have held several meetings with the Victoria Chamber of Commerce President to increase the awareness of the technological capabilities of the Corpus Christi office, communications links, and products and services. The Corpus Christi office initiated and led the first-ever severe weather conference with Victoria County officials, the Chamber of Commerce, local media, and volunteer storm spotters.

The Corpus Christi office led an effort to establish an Emergency Alert System (EAS) Plan among all media outlets in the Victoria District, which includes the counties of Calhoun, De Witt, Goliad, Jackson, Lavaca, and Victoria. The EAS is important to alert the citizens of the Victoria Crossroads area to stay out of harm's way. Public outreach has expanded through the development of the Emergency Managers Weather Information Network and by establishing a system to relay warnings from NOAA Weather Radio to the media.

During anticipated significant weather events, the NWS special liaison officer for Victoria is detailed to the main Victoria fire station or the designated Victoria Emergency Operations Center. The special liaison officer coordinates severe weather/flood information between Victoria and the Corpus Christi office.

When severe warnings are issued for the Victoria area, the Corpus Christi office calls the Victoria 911 dispatcher immediately, who in turn, relays the warnings to the local police, sheriff, and fire department. The Corpus Christi office also calls the Victoria Department of Public Safety when warnings are issued and faxes warning information to the Calhoun County Emergency Management Center.

Whenever thunderstorm activity approaches Victoria County, an extra meteorologist is called into the Corpus Christi office. This meteorologist coordinates warning information for the Victoria area and ensures the Victoria County Emergency Operations Center, fire department, and TV25 Chief Meteorologist are notified of severe weather warnings.

The NWS is committed to providing accurate and timely products and services to the Victoria community for the protection of life and property.

[FR Doc 99–26990 Filed 10–14–99; 8:45 am]

BILLING CODE 3510–KE–M

COMMITTEE FOR THE IMPLEMENTATION OF TEXTILE AGREEMENTS

Adjustment of Import Limits for Certain Cotton, Wool, Man-Made Fiber, Silk Blend and Other Vegetable Fiber Textiles and Textile Products Produced or Manufactured in Indonesia

October 12, 1999.

AGENCY: Committee for the Implementation of Textile Agreements (CITA).

ACTION: Issuing a directive to the Commissioner of Customs adjusting limits.

EFFECTIVE DATE: October 19, 1999.

FOR FURTHER INFORMATION CONTACT: Janet Heinzen, International Trade Specialist, Office of Textiles and Apparel, U.S. Department of Commerce, (202) 482–4212. For information on the quota status of these limits, refer to the Quota Status Reports posted on the bulletin boards of each Customs port, call (202) 927–5850, or refer to the U.S. Customs website at http://www.customs.ustreas.gov. For information on embargoes and quota re-openings, call (202) 482–3715.

SUPPLEMENTARY INFORMATION:

Authority: Section 204 of the Agricultural Act of 1956, as amended (7 U.S.C. 1854); Executive Order 11651 of March 3, 1972, as amended.

The current limits for certain categories are being adjusted for swing and special shift.

A description of the textile and apparel categories in terms of HTS numbers is available in the CORRELATION: Textile and Apparel Categories with the Harmonized Tariff Schedule of the United States (see **Federal Register** notice 63 FR 71096, published on December 23, 1998). Also

see 63 FR 69055, published on December 15, 1998.

Troy H. Cribb,

Chairman, Committee for the Implementation of Textile Agreements.

Committee for the Implementation of Textile Agreements

October 12, 1999.

Commissioner of Customs,
Department of the Treasury, Washington, DC 20229.

Dear Commissioner: This directive amends, but does not cancel, the directive issued to you on December 8, 1998, by the Chairman, Committee for the Implementation of Textile Agreements. That directive concerns imports of certain cotton, wool, man–made fiber, silk blend and other vegetable fiber textiles and textile products, produced or manufactured in Indonesia and exported during the twelve-month period which began on January 1, 1999 and extends through December 31, 1999.

Effective on October 19, 1999, you are directed to adjust the limits for the categories listed below, as provided for under the Uruguay Round Agreement on Textiles and Clothing:

Category	Adjusted twelve-month limit [1]
Levels in Group I	
200	981,514 kilograms.
219	9,022,696 square meters.
300/301	4,905,437 kilograms.
313–O [2]	13,424,887 square meters.
314–O [3]	58,427,796 square meters.
315–O [4]	29,512,104 square meters.
317–O [5]/326–O [6]/617	23,974,136 square meters of which not more than 4,167,829 square meters shall be in Category 326–O.
331/631	2,400,369 dozen pairs.
338/339	1,569,959 dozen.
340/640	1,803,659 dozen.
341	1,067,415 dozen.
347/348	2,126,793 dozen.
350/650	139,056 dozen.
351/651	625,907 dozen.
359–C/659–C [7]	1,551,167 kilograms.
359–S/659–S [8]	1,319,336 kilograms.
433	12,724 dozen.
443	96,036 numbers.
445/446	67,252 dozen.
448	24,718 dozen.
611–O [9]	4,226,276 square meters.
613/614/615	21,756,916 square meters.
618–O [10]	922,217 square meters.
619/620	10,472,294 square meters.
625/626/627/628/629–O [11].	26,113,499 square meters.
634/635	372,545 dozen.
638/639	1,577,285 dozen.
641	2,439,735 dozen.
645/646	685,322 dozen.
647/648	3,697,613 dozen.
847	384,853 dozen.
Subgroup in Group II	
400, 410, 414, 431, 434, 435, 436, 438, 440, 442, 444, 459pt., 464 and 469pt., as a group.	3,206,640 square meters equivalent.

[1] The limits have not been adjusted to account for any imports exported after December 31, 1998.

[2] Category 313–O: all HTS numbers except 5208.52.3035, 5208.52.4035 and 5209.51.6032.

[3] Category 314–O: all HTS numbers except 5209.51.6015.

[4] Category 315–O: all HTS numbers except 5208.52.4055.

[5] Category 317–O: all HTS numbers except 5208.59.2085.

[6] Category 326–O: all HTS numbers except 5208.59.2015, 5209.59.0015 and 5211.59.0015.

[7] Category 359–C: only HTS numbers 6103.42.2025, 6103.49.8034, 6104.62.1020, 6104.69.8010, 6114.20.0048, 6114.20.0052, 6203.42.2010, 6203.42.2090, 6204.62.2010, 6211.32.0010, 6211.32.0025 and 6211.42.0010; Category 659–C: only HTS numbers 6103.23.0055, 6103.43.2020, 6103.43.2025, 6103.49.2000, 6103.49.8038, 6104.63.1020, 6104.63.1030, 6104.69.1000, 6104.69.8014, 6114.30.3044, 6114.30.3054, 6203.43.2010, 6203.43.2090, 6203.49.1010, 6203.49.1090, 6204.63.1510, 6204.69.1010, 6210.10.9010, 6211.33.0010, 6211.33.0017 and 6211.43.0010.

[8] Category 359–S: only HTS numbers 6112.39.0010, 6112.49.0010, 6211.11.8010, 6211.11.8020, 6211.12.8010 and 6211.12.8020; Category 659–S: only HTS numbers 6112.31.0010, 6112.31.0020, 6112.41.0010, 6112.41.0020, 6112.41.0030, 6112.41.0040, 6211.11.1010, 6211.11.1020, 6211.12.1010 and 6211.12.1020.

[9] Category 611–O: all HTS numbers except 5516.14.0005, 5516.14.0025 and 5516.14.0085.

[10] Category 618–O: all HTS numbers except 5408.24.9010 and 5408.24.9040.

[11] Category 625/626/627/628; Category 629–O: all HTS numbers except 5408.34.9085 and 5516.24.0085.

The Committee for the Implementation of Textile Agreements has determined that these actions fall within the foreign affairs exception to the rulemaking provisions of 5 U.S.C. 553(a)(1).

Sincerely,

Troy H. Cribb,

Chairman, Committee for the Implementation of Textile Agreements.

[FR Doc.99–26984 Filed 10–14–99; 8:45 am]

BILLING CODE 3510–DR–F

COMMITTEE FOR THE IMPLEMENTATION OF TEXTILE AGREEMENTS

Announcement of Levels for Certain Cotton, Wool and Man-Made Fiber Textile Products Produced or Manufactured in the United Mexican States

October 6, 1999.

AGENCY: Committee for the Implementation of Textile Agreements (CITA).

ACTION: Issuing a directive to the Commissioner of Customs establishing levels under the North America Free Trade Agreement.

EFFECTIVE DATE: January 1, 2000.

FOR FURTHER INFORMATION CONTACT: Naomi Freeman, International Trade Specialist, Office of Textiles and Apparel, U.S. Department of Commerce, (202) 482–4212. For information on the quota status of these limits, refer to the Quota Status Reports posted on the bulletin boards of each Customs port, call (202) 927–5850, or refer to the U.S. Customs website at http://www.customs.ustreas.gov. For information on embargoes and quota reopenings, call (202) 482–3715.

SUPPLEMENTARY INFORMATION:

Authority: Section 204 of the Agricultural Act of 1956, as amended (7 U.S.C. 1854); Executive Order 11651 of March 3, 1972, as amended.

In order to implement Annex 300–B of the North American Free Trade Agreement (NAFTA), restrictions and consultation levels for certain cotton, wool and man-made fiber textile products from Mexico are being established for the period beginning on January 1, 2000 and extending through December 31, 2000.

These restrictions and consultation levels do not apply to NAFTA originating goods, as defined in Annex 300–B, Chapter 4 and Annex 401 of the NAFTA. In addition, restrictions and consultation levels do not apply to textile and apparel goods that are assembled in Mexico from fabrics wholly formed and cut in the United States and exported from and re-imported into the United States under U.S. tariff item 9802.00.90.

In the letter published below, the Chairman of CITA directs the Commissioner of Customs to implement levels for the 2000 period.

A description of the textile and apparel categories in terms of HTS numbers is available in the CORRELATION: Textile and Apparel Categories with the Harmonized Tariff

Schedule of the United States (see **Federal Register** notice 63 FR 71096, published on December 23, 1998). Information regarding the 2000 CORRELATION will be published in the **Federal Register** at a later date.

Troy H. Cribb,

Chairman, Committee for the Implementation of Textile Agreements.

Committee for the Implementation of Textile Agreements

October 6, 1999.

Commissioner of Customs,
Department of the Treasury, Washington, DC 20229.

Dear Commissioner: Pursuant to section 204 of the Agricultural Act of 1956, as amended (7 U.S.C. 1854); Executive Order 11651 of March 3, 1972, as amended; and the North American Free Trade Agreement (NAFTA), between the Governments of the United States, the United Mexican States and Canada, you are directed to prohibit, effective on January 1, 2000, entry into the United States for consumption and withdrawal from warehouse for consumption of cotton, wool and man-made fiber textile products in the following categories, produced or manufactured in Mexico and exported during the twelve-month period beginning on January 1, 2000 and extending through December 31, 2000, in excess of the following levels:

Category	Twelve-month limit
219	9,438,000 square meters.
313	16,854,000 square meters.
314	6,966,904 square meters.
315	6,966,904 square meters.
317	8,427,000 square meters.
338/339/638/639	650,000 dozen.
340/640	189,287 dozen.
347/348/647/648	650,000 dozen.
410	397,160 square meters.
433	11,000 dozen.
443	189,798 numbers.
611	1,267,710 square meters.
633	10,000 dozen.
643	155,556 numbers.

The levels set forth above are subject to adjustment pursuant to the provisions of Annex 300–B of the NAFTA.

Products in the above categories exported during 1999 shall be charged to the applicable category levels for that year (see directive dated September 30, 1998) to the extent of any unfilled balances. In the event the levels established for that period have been exhausted by previous entries, such products shall be charged to the levels set forth in this directive.

The foregoing levels do not apply to NAFTA originating goods, as defined in Annex 300–B, Chapter 4 and Annex 401 of the NAFTA. In addition, restrictions and consultation levels do not apply to textile and apparel goods that are assembled in Mexico from fabrics wholly formed and cut in the United States and exported from and re-imported into the United States under U.S. tariff item 9802.00.90.

In carrying out the above directions, the Commissioner of Customs should construe entry into the United States for consumption to include entry for consumption into the Commonwealth of Puerto Rico.

The Committee for the Implementation of Textile Agreements has determined that these actions fall within the foreign affairs exception of the rulemaking provisions of 5 U.S.C. 553(a)(1).

Sincerely,

Troy H. Cribb,

Chairman, Committee for the Implementation of Textile Agreements.

[FR Doc. 99–26883 Filed 10–14–99; 8:45 am]

BILLING CODE 3510–DR–F

CONSUMER PRODUCT SAFETY COMMISSION

Sunshine Act Meeting

AGENCY: U.S. Consumer Product Safety Commission, Washington, DC 20207.

TIME AND DATE: Thursday, October 21, 1999, 10:00 a.m.

LOCATION: Room 410, East West Towers, 4330 East West Highway, Bethesda, Maryland.

STATUS: Closed to the Public.

MATTER TO BE CONSIDERED: *Compliance Status Report*—The staff will brief the Commission on the status of various compliance matters.

For a recorded message containing the latest agenda information, call (301) 504–0709.

CONTACT PERSON FOR ADDITIONAL INFORMATION: Sadye E. Dunn, Office of the Secretary, 4330 East West Highway, Bethesda, MD 20207 (301) 504–0800.

Dated: October 12, 1999.

Todd A. Stevenson,

Deputy Secretary.

[FR Doc. 99–27106 Filed 10–13–99; 2:21 pm]

BILLING CODE 6355–01–M

CORPORATION FOR NATIONAL AND COMMUNITY SERVICE

Proposed Information Collection; Comment Request

AGENCY: Corporation for National and Community Service.

ACTION: Notice.

SUMMARY: The Corporation for National and Community Service (hereinafter the ''Corporation''), as part of its continuing effort to reduce paperwork and respondent burden, conducts a preclearance consultation program to provide the general public and Federal agencies with an opportunity to comment on proposed and/or continuing collections of information in accordance with the Paperwork Reduction Act of 1995 (PRA95) (44 U.S.C. 3506(c)(2)(A)). This program helps to ensure that requested data can be provided in the desired format, reporting burden (time and financial resources) is minimized, collection instruments are clearly understood, and the impact of collection requirement on respondents can be properly assessed.

Currently, the Corporation is soliciting comments concerning its request for approval of a new information collection from individuals as well as agencies and organizations that are affiliated with the AmeriCorps*National Civilian Community Corps (NCCC) as sponsors of AmeriCorps*NCCC projects. This information will be used by the Corporation to evaluate the impacts of AmeriCorps*NCCC projects on the communities they serve and identify ways to improve the program.

Copies of the proposed information collection request may be obtained by contacting the office listed below in the **ADDRESSES** section of this notice.

DATES: Written comments must be submitted to the office listed in the **ADDRESSES** section by December 14, 1999.

ADDRESSES: Send comments to the Corporation for National and Community Service Attn: Charles Helfer, Office of Evaluation, 1201 New York Avenue, NW., 9th floor, Washington, DC 20525.

FOR FURTHER INFORMATION CONTACT: Charles Helfer, (202) 606–5000, ext. 248.

SUPPLEMENTARY INFORMATION: The Corporation is particularly interested in comments which:

- Evaluate whether the proposed collection of information is necessary for the proper performance of the functions of the Corporation, including whether the information will have practical utility;
- Evaluate the accuracy of the agency's estimate of the burden of the proposed collection of information, including the validity of the methodology and assumptions used;
- Propose ways to enhance the quality, utility and clarity of the information to be collected; and
- Propose ways to minimize the burden of the collection of information on those who are to respond, including through the use of appropriate automated, electronic, mechanical, or other technological collection

techniques or other forms of information technology, *e.g.*, permitting electronic submissions of responses.

Background

AmeriCorps*National Civilian Community Corps (NCCC) was established by the National and Community Service Trust Act of 1993 (Pub. L 103–82). It is a 10-month, full-time residential program for men and women 18–24 operated directly by the Corporation for National Service. AmeriCorps*NCCC was designed to blend the best practices of civilian service with the best practices of military service, including leadership development and team-building. Members live and train at campus based on five regions. In three regions, campuses occupy closed or downsized military bases: The Southeast Region in Charleston, SC; the Central Region in Denver, CO; and the Western Region in San Diego, CA. The campus in the Northeast Region occupies a medical facility for veterans in Perry Point, MD, and the Capital Region is based at a municipal facility in Washington, DC. AmeriCorps*NCCC service emphasizes disaster relief, large-scale capital improvements, and providing leadership to large groups of volunteers. A service-learning approach that includes planned activities and training is part of all service projects. Since 1994, more than 4,000 young Americans have served as members of AmeriCorps*NCCC.

This proposed evaluation of the community impacts of the AmeriCorps*NCCC program is supported by the legislation that authorized the program (Pub. L. 103–82) and by the Corporation's strategic and performance plans prepared in response to the Government Performance and Results Act of 1993 (GPRA). Under Pub. L. 103–82, the Corporation is required to evaluate each of its programs on a continuing basis (Section 179, or 42 U.S.C. 12639). The Corporation's Fiscal 2000 Performance Plan (required under GPRA) specifically lists this study. It states that the AmeriCorps*NCCC Community Impact Evaluation is directly related to Strategic Goals 1 and 2 as presented in its Strategic Plan for 1997–2002. Those goals are:

Strategic Goal 1: Service will help solve the nation's unmet education, public safety, environmental and other human needs.

Strategic Goal 2: Communities will be made stronger through service.

It is an agency priority to evaluate the impacts of its AmeriCorps programs. This data collection will assess the impacts of the Corporation's AmeriCorps*NCCC program on direct beneficiaries, agency and organizational sponsors, and the larger communities served by AmeriCorps*NCCC projects.

Current Action

The Corporation seeks approval of three survey forms and an interview protocol for the evaluation of the community impacts of the Corporation's AmeriCorps*NCCC program. It will allow for the assessment of the impact of the AmeriCorps*NCCC projects on direct beneficiaries, agency and organizational sponsors, and the larger communities they serve. It will also help the Corporation to determine effective planning, initiation, and implementation practices for enhancing AmeriCorps*NCCC projects' impacts on communities.

(I) Pre-Project Sponsor Survey

This survey is designed to assess project sponsors' expectations for their AmeriCorps*NCCC project. It asks for information about the community needs that led to the project, previous related activities, alternative ways to achieve project objectives, expected impacts, ways that impacts will be measured, relative priority or value of expected impacts, and the processes that led to project approval. This information will serve as the baseline against which post-project information will be compared.

Type of Review: New approval.

Agency: Corporation for National and Community Service.

Title: Pre-Project Sponsor Survey.

OMB Number: None.

Agency Number: None.

Affected Public: Approved agency or organization sponsors for AmeriCorps* NCCC Class VI (1999–2000 program year) projects.

Total Respondents: Approximately 108.

Frequency: One time.

Average Time Per Response: 40 minutes.

Estimated Total Burden Hours: 72.4 hours.

Total Burden Cost (capital/startup): None.

Total Burden Cost (operating/maintenance): None.

(II) Post-Project Sponsor Survey

This survey is designed to assess project sponsors' perceptions of the impacts of their AmeriCorps*NCCC project on their community. It asks for information about the extent to which community needs that led to the project were met and the extent to which their expectations were achieved, evidence used by the sponsor to support perceptions of project impacts, plans for related future activities, changes in project activities or objectives during implementation, unexpected implementation issues, assessments of the reasons for their perceptions of impacts, and project costs to the sponsor and other community organizations. This information will be compared to baseline information gathered from the Pre-project Sponsor Survey and to project impacts reported by other community respondents (from the Post-project Community Survey) as well as to information gathered from AmeriCorps*NCCC program personnel.

Type of Review: New approval.

Agency: Corporation for National and Community Service.

Title: Post-project Sponsor Survey.

OMB Number: None.

Agency Number: None.

Affected Public: Agency or organization sponsors for AmeriCorps* NCCC Class VI (1999–2000 program year) projects who were administered the Pre-project Sponsor survey and whose projects were implemented.

Total Respondents: Approximately 103.

Frequency: One time.

Average Time Per Response: 60 minutes.

Estimated Total Burden Hours: 103.0 hours.

Total Burden Cost (capital/startup): None.

Total Burden Cost (operating/maintenance): None.

(III) Post-Project Community Survey

This survey is designed to assess the perceptions of AmeriCorps*NCCC projects' direct beneficiaries of the impacts of the AmeriCorps*NCCC projects on them and their community. It asks for information about what the respondent expected from the AmeriCorps*NCCC project, how that compared to their perceptions of actual impacts, and the basis on which they are making their comparisons. It also asks for information about the implementation of the project from the community respondents' perspectives, including any costs of project implementation to them. This information will be compared to baseline information gathered from the Pre-project Sponsor Survey and to project impacts reported by the sponsors in the Post-project Sponsor Survey as well as to information gathered from AmeriCorps*NCCC program personnel.

Type of Review: New approval.

Agency: Corporation for National and Community Service.

Title: Post-project Community Survey.

OMB Number: None.

Agency Number: None.

Affected Public: Representatives of organizations or individuals that were served directly by AmeriCorps*NCCC Class VI (1999–2000 program year) projects included in both the Pre-project Sponsor Survey and Post-project Sponsor Survey. Not all projects have organizations, other than the sponsor, or individuals as direct service recipients.

Total Respondents: Approximately 160.

Frequency: One time.

Average Time Per Response: 20 minutes.

Estimated Total Burden Hours: 53.3 hours.

Total Burden Cost (capital/startup): None.

Total Burden Cost (operating/maintenance): None.

(IV) Implementation Interview Protocol

This protocol is designed to obtain detailed information from a subsample of AmeriCorps*NCCC projects while they are in operation. Topics addressed include changes in project activities or objectives since the project was approved and rationales for those changes, document the activities being conducted by the project and by others directed toward project activities, document the types and amounts of resources being expended in support of the AmeriCorps*NCCC project team, sponsors' and other community representatives' assessments of project quality, document accomplishments of the project at the time of the interview relative to project plans, and obtain sponsors' and other community representatives' assessments of effective implementation practices. This information will be used directly in the analysis of the community impacts of the AmeriCorps*NCCC projects visited for these interviews in combination with the Pre-project Sponsor Survey, Post-project Sponsor Survey, and Post-project Community Survey. The information will also be compared to the information from the same projects generated by the surveys to ensure the validity of the information collections. The information also will be used to inform the general analysis of all survey data, particularly in seeking effective practices and explanations for different levels of project impacts.

Type of Review: New approval.

Agency: Corporation for National and Community Service.

Title: Implementation Interview Protocol.

OMB Number: None.

Agency Number: None.

Affected Public: Sponsor managers, service-site supervisors, representatives of other organizations and individuals served by the projects.

Total Respondents: Approximately 78.

Frequency: One time.

Average Time Per Response: 0.62 hours.

Estimated Total Burden Hours: 48 hours.

Total Burden Cost (capital/startup): None.

Total Burden Cost (operating/maintenance): None.

Comments submitted in response to this notice will be summarized and/or included in the request for Office of Management and Budget approval of the information collection request; they will also become a matter of public record.

Dated: October 8, 1999.

Thomas L. Bryant,

Associate General Counsel.

[FR Doc. 99–26937 Filed 10–14–99; 8:45 am]

BILLING CODE 6050–28–U

DEPARTMENT OF DEFENSE

Department of the Navy

Notice of Closed Meeting of the Planning and Steering Advisory Committee

AGENCY: Department of the Navy, DOD.

ACTION: Notice.

SUMMARY: The purpose of this meeting is to discuss topics relevant to SSBN security.

DATES: The meeting will be held on November 3, 1999 from 9:00 a.m. to 4:00 p.m.

ADDRESSES: The meeting will be held at the Center for Naval Analyses, 4401 Ford Avenue, Alexandria, Virginia.

FOR FURTHER INFORMATION CONTACT: Lieutenant Commander George P. Norman, CNO–N875C2, 2000 Navy Pentagon, NC–1, Washington, D.C. 20350–2000, (703) 604–7392.

SUPPLEMENTARY INFORMATION: This notice of meeting is provided per the Federal Advisory Committee Act (5 U.S.C. App. 2). The entire agenda will consist of classified information that is specifically authorized by Executive Order to be kept secret in the interest of national defense and is properly classified pursuant to such Executive Order. Accordingly, the Secretary of the Navy has determined in writing that all sessions of the meeting shall be closed to the public because they concern matters listed in 552b(c)(1) of title 5, U.S.C.

Dated: October 6, 1999.

C.G. Carlson,

Major, U.S. Marine Corps, Alternate Federal Register Liaison Officer.

[FR Doc. 99–26913 Filed 10–14–99; 8:45 am]

BILLING CODE 3810–FF–U

DEPARTMENT OF ENERGY

Office of Arms Control and Nonproliferation Policy; Proposed Subsequent Arrangement

AGENCY: Department of Energy.

ACTION: Subsequent arrangement.

SUMMARY: This notice is being issued under the authority of Section 131 of the Atomic Energy Act of 1954, as amended (42 U.S.C. 2160). The Department is providing a notice of a proposed ''subsequent arrangement'' under the Agreement for Cooperation in the Peaceful Uses of Nuclear Energy Between the United States of America and the European Atomic Energy Community (EURATOM) and the Agreement for Cooperation Between the Government of the United States of America and the Government of the People's Republic of China Concerning the Peaceful Uses of Nuclear Energy.

The subsequent arrangement concerns approval of RTD/PC(EU)–1 for the retransfer of 32,574 grams of slightly irradiated fuel spheres containing 5,456.145 grams of the isotope U–235 (16.76 percent enrichment) from EURATOM (Germany) to the People's Republic of China for use as research material in the 10 megawatt High Temperature Gas-cooled Reactor (HTR–10) which is being constructed at the Institute of Nuclear Energy Technology (INET) in Beijing, China.

The material was originally transferred from Germany to Switzerland as RTD/SD(EU)–59 for fabrication into graphite coated fuel spheres and returned to Germany as RTD/EU(SD)–1.

In accordance with Section 131 of the Atomic Energy Act of 1954, as amended, it has been determined that this subsequent arrangement will not be inimical to the common defense and security.

This subsequent arrangement will take effect no sooner than fifteen days after the date of publication of this notice.

Dated: October 8, 1999.

For the Department of Energy.

Trisha Dedik,

Director, International Policy and Analysis Division, Office of Arms Control and Nonproliferation.

[FR Doc. 99–26986 Filed 10–14–99; 8:45 am]

BILLING CODE 6450–01–P

DEPARTMENT OF ENERGY

Office of Nonproliferation and National Security (NN); Nonproliferation and National Security Advisory Committee

AGENCY: Department of Energy.

ACTION: Notice of closed meeting.

SUMMARY: This notice announces a meeting of the Nonproliferation and National Security Advisory Committee. The Federal Advisory Committee Act, 5 U.S.C. App. 2 section 10(a)(2) requires that public notice of these meetings be announced in the **Federal Register**.

DATES: Wednesday, October 20, 1999, 9 a.m. to 5 p.m.; Thursday, October 21, 1999, 9 a.m. to 5 p.m.; and Friday, October 22, 1999, 9 a.m. to 12 noon.

ADDRESSES: Department of Energy, Forrestal Building Washington, D.C.

FOR FURTHER INFORMATION CONTACT: Mr. Robert Waldron (202–586–2400), Designated Federal Officer, Office of Nonproliferation Research and Engineering (NN–20), Office of Nonproliferation and National Security, 1000 Independence Avenue, SW, Washington, DC. 20585.

SUPPLEMENTARY INFORMATION: *Purpose of the Meeting:* To discuss the nonproliferation and national security research, development and policy programs.

Tentative Agenda

Wednesday, October 20, 1999

9:00 a.m.–12:00 p.m. NNAC Working Session for Report Preparation
12:00 p.m.–1:00 p.m. Working Lunch
1:00 p.m.–5:00 p.m. NNAC Working Session for Report Preparation

Thursday, October 21, 1999

9:00 a.m.–12:00 p.m. NN R&D and Policy Briefings
12:00 p.m.–1:00 p.m. Working Lunch
1:00 p.m.–5:00 p.m. NNAC Working Session for Report Preparation

Friday, October 22, 1999

9:00 a.m.–12:00 p.m. NNAC Working Session for Report Preparation

Closed Meeting: In the interest of national security, the meeting will be closed to the public pursuant to the Federal Advisory Committee Act, 5 U.S.C. App. 2 section 10(d), and the Federal Advisory Committee Management regulation, 41 CFR 101–6.1023, ''Procedures for Closing an Advisory Committee Meeting'', which incorporate by reference the Government in Sunshine Act, 5 U.S.C. 552b, which, at sections 552b (c)(1) and (c)(3) permits closure of meetings where restricted data or other classified matters are discussed. This notice is being published less than 15 days before the date of the meeting due to programmatic issues that had to be resolved prior to publication.

Minutes: Minutes of the meeting will be recorded and classified accordingly.

Issued at Washington, DC on October 8, 1999.

Rachel M. Samuel,

Deputy Advisory Committee Management Officer.

[FR Doc. 99–27023 Filed 10–14–99; 8:45 am]

BILLING CODE 6450–01–P

DEPARTMENT OF ENERGY

Federal Energy Regulatory Commission

[Docket No. RP00–15–000]

CNG Transmission Corporation; Notice of Stipulation and Agreement

October 8, 1999.

Take notice that on October 5, 1999, pursuant to Rule 602 of the Rules of Practice and Procedure of the Commission, 18 CFR 385.602 (1999), CNG Transmission Corporation (CNG) submits a Stipulation and Agreement (Settlement) with regard to the operation of CNG's Transportation Cost Rate Adjustment (TCRA).

CNG states that the offer of Settlement consists of a letter which serves as the required Explanatory Statement, and the Settlement, which constitutes a limited amendment to the Settlement approved by the Commission last year regarding CNG's Section 4 rate case in Docket Nos. RP97–406, *et al.*[1]

CNG requests a shortened comment period, with Initial Comments on the Settlement due within ten days and Reply Comments due ten days thereafter.

Any person desiring to be heard or to protest said filing should file a motion to intervene or a protest with the Federal Energy Regulatory Commission, 888 First Street, NE, Washington, DC 20426, in accordance with Sections 385.214 or 385.211 of the Commission's Rules and Regulations. All such motions or protests must be filed in accordance with Section 154.210 of the Commission's Regulations. Protests will be considered by the Commission in determining the appropriate action to be taken, but will not serve to make protestants parties to the proceedings. Any person wishing to become a party must file a motion to intervene. Copies of this filing are on file with the Commission and are available for public inspection in the Public Reference Room. This filing may be viewed on the web at http://www.ferc.fed.us/online/rims.htm (call 202–208–2222 for assistance).

Linwood A. Watson, Jr.,

Acting Secretary.

[FR Doc. 99–26899 Filed 10–14–99; 8:45 am]

BILLING CODE 6717–01–M

[1] *CNG Transmission Corporation,* 85 FERC ¶ 61,261 (1998).

DEPARTMENT OF ENERGY

Federal Energy Regulatory Commission

[Docket No. TM00–1–23–000]

Eastern Shore Natural Gas Company; Notice of Proposed Changes in FERC Gas Tariff

October 8, 1999.

Take notice that on October 6, 1999, Eastern Shore Natural Gas Company (ESNG) tendered for filing as part of its FERC Gas Tariff, Second Revised Volume No.1, certain revised tariff sheets in the above captioned docket bear a proposed effective date of October 1, 1999.

ESNG states that the purpose of this instant filing is to track rate changes attributable to a storage service purchased from Columbia Gas Transmission Corporation (Columbia) under its Rate Schedules SST and FSS. The costs of the above referenced storage service comprise the rates and charges payable under ESNG's Rate Schedules SST and FSS. This tracking filing is being made pursuant to section 3 of ESNG's Rate Schedule CFSS.

ESNG states that copies of the filing have been served upon its jurisdictional customers and interested State Commissions.

Any person desiring to be heard or to protest said filing should file a motion to intervene or a protest with the Federal Energy Regulatory Commission, 888 First Street, NE, Washington, DC 20426, in accordance with sections 385.214 or 385.211 of the Commission's Rules and Regulations. All such motions or protests must be filed in accordance with section 154.210 of the Commission's Regulations. Protests will be considered by the Commission in determining the appropriate action to be

taken, but will not serve to make protestants parties to the proceedings. Any person wishing to become a party must file a motion to intervene. Copies of this filing are on file with the Commission and are available for public inspection in the Public Reference Room. This filing may be viewed on the web at http://www.ferc.fed.us/online/rims.htm (call 202–208–2222 for assistance).

Linwood A. Watson, Jr.

Acting Secretary.

[FR Doc. 99–26900 Filed 10–14–99; 8:45 am]

BILLING CODE 6717–01–M

DEPARTMENT OF ENERGY

Federal Energy Regulatory Commission

[Docket No. RP00–14–000]

El Paso Natural Gas Company; Notice of Tariff Filing

October 8, 1999.

Take notice that on October 5, 1999, El Paso Natural Gas Company (El Paso) tendered for filing to become part of its FERC Gas Tariff, Second Revised Volume No. 1–A, the following sheets to become effective November 5, 1999:

First Revised Sheet No. 265
First Revised Sheet No. 280

El Paso states that the tendered tariff sheets revise El Paso's cash-out mechanism to substitute Permian prices in lieu of Anadarko prices due to the elimination of the Anadarko prices from industry trade publications.

Any person desiring to be heard or to protest said filing should file a motion to intervene or a protest with the Federal Energy Regulatory Commission, 888 First Street NE, Washington, DC 20426, in accordance with Sections 385.214 or 385.211 of the Commission's Rules and Regulations. All such motions or protests must be filed in accordance with Section 154.210 of the Commission's Regulations. Protest will be considered by the Commission in determining the appropriate action to be taken, but will not serve to make protestants parties to the proceedings. Any person wishing to become a party must file a motion to intervene. Copies of this filing are on file with the Commission and are available for public inspection in the Public Reference Room. This filing may be viewed on the web at http://www.ferc.fed.us/online/rims.htm (call 202–208–2222 for assistance).

Linwood A. Watson, Jr.,

Acting Secretary.

[FR Doc. 99–26955 Filed 10–14–99; 8:45 am]

BILLING CODE 6717–01–M

DEPARTMENT OF ENERGY

Federal Energy Regulatory Commission

[Docket Nos. ER99–3887–000 and EL99–92–000]

Mid-American Energy Company; Correction to Errata Notice; Errata Notice (October 7, 1999); Notice of Initiation of Proceeding and Refund Effective Date (Issued October 4, 1999)

October 8, 1999.

The errata notice that was issued on October 7, 1999 is corrected to include the Federal Register Cite for the ''Notice of Initiation of Proceeding and Refund Effective Date'' and should read as follows:

In the first sentence of the above-referenced notice (64 FR 54625, published October 7, 1999), change ''June 17, 1999'' to ''September 30, 1999''.

Linwood A. Watson, Jr.,

Acting Secretary.

[FR Doc. 99–26956 Filed 10–14–99; 8:45 am]

BILLING CODE 6717–01–M

DEPARTMENT OF ENERGY

Federal Energy Regulatory Commission

Notice of Applications Tendered for Filing With The Commission and Soliciting Additional Study Requests

October 8, 1999.

Take notice that the following hydroelectric applications have been filed with the Commission and are available for public inspection:

a. *Type of Applications:* New major licenses.

b. *Projects:* Soda Project No. 20–019, Grace-Cove Project No. 2401–007, and Oneida Project No. 472–017.

c. *Date Filed:* September 27, 1999.

d. *Applicant:* PacifiCorp.

e. *Location:* On the Bear River in Caribou and Franklin Counties, Idaho. The projects are partially on United States lands administered by the Bureau of Land Management.

f. *Filed Pursuant to:* Federal Power Act, 16 USC §§ 791(a)–825(r).

g. *Applicant Contact:* Randy Landolt, Managing Director, Hydro Resources, PacifiCorp, 825 N.E. Multnomah Street, Suite 1500, Portland, OR 97232, (503) 813–6650, or, Thomas H. Nelson, 825 Multnomah Street, Suite 925, Portland, OR 97232, (503) 813–5890.

h. *FERC Contact:* Hector Perez, hector.perez@ferc.fed.us, (202) 219–2843.

i. *Deadline for Filing Additional Study Requests:* November 26, 1999. All documents (original and eight copies) should be filed with: David P. Boergers, Secretary, Federal Energy Regulatory Commission, 888 First Street, NE, Washington, DC 20426.

The Commission's Rules of Practice and Procedure require all interveners filing documents with the Commission to serve a copy of that document on each person on the official service list for the project. Further, if an intervener files comments or documents with the Commission relating to the merits of an issue that may affect the responsibilities of a particular resource agency, they must also serve a copy of the document on that resource agency.

j. This application is not ready for environmental analysis at this time.

k. The existing Soda Project consists of: (1) the 103-foot-high and 433-foot-long concrete gravity Soda Dam with a 114-foot-long spillway section; (2) the Soda Reservoir with a surface area of 1,100 acres, and active storage capacity of 16,300 acre-feet, and a maximum water elevation of 5,720 feet; (3) the Soda Powerhouse containing two units with a total installed capacity of 14 megawatts (MW); and (4) other appurtenances.

The existing Grace Development consists of: (1) a 51-foot-high and 180-foot-long rock filled timber crib dam that creates a 250 acre-feet usable storage capacity forebay; (2) a 26,000-foot-long flowline and surge tanks; and (3) a powerhouse with three units with total installed capacity of 33 MW. The Cove Development consists of: (1) a 26.5-foot-high and 141-foot-long concrete dam creating a 60-acre-foot forebay; (2) a 6,125-foot-long concrete and wood flume; (3) a 500-foot-long steel penstock; and (4) a powerhouse with a 7.5-MW unit.

The existing Oneida Project consists of: (1) the 111-foot-high and 456-foot-long concrete gravity Oneida Dam; (2) the Oneida Reservoir with an active storage of 10,880 acre-feet and a surface area of 480 acres; (3) an 16-foot-diameter, 2,240-foot-long flowline; (4) a surge tank; (5) three 12-foot-diameter, 120-foot-long steel penstocks; (6) the Oneida Powerhouse with three units with a total installed capacity of 30 MW; and (7) other appurtenances.

l. A copy of the application is available for inspection and reproduction at the Commission's Public Reference Room, located at 888 First Street, NE, Room 2A, Washington, D.C. 20426, or by calling (202) 208–1371. The application may be viewed on http://www.ferc.fed.us/rims.htm (call (202) 208–222 for assistance). A copy is also available for inspection and reproduction at the address in item g above.

m. With this notice, we are initiating consultation with the State Historic Preservation Officer as required by § 106, National Historic Preservation Act, and the regulations of the Advisory Council on Historic Preservation, 36 CFR at 800.4.

Linwood A. Watson, Jr.,

Acting Secretary.

[FR Doc. 99–26901 Filed 10–14–99; 8:45 am]

BILLING CODE 6717–01–M

DEPARTMENT OF ENERGY

Federal Energy Regulatory Commission

Notice of Application To Amend License, and Soliciting Comments, Motions To Intervene, and Protests

October 8, 1999.

a. *Application Type:* Application to amend license for the Borel Project.

b. *Project No:* 382–020.

c. *Date Filed:* September 20, 1999.

d. *Applicant:* Southern California Edison Company (SCE).

e. *Name of Project:* Borel Project.

f. *Location:* The Borel Project is on the Kern River, about 40 miles northeast of Bakersfield, near the towns of Kernville and Isabella, Kern County, California. The project utilizes lands of the United States.

g. *Filed Pursuant to:* Federal Power Act, 16 U.S.C. 791(a)–825(r).

h. *Applicant Contact:* Ms. Terri Loun, SCE, 300 N. Lone Hill Ave., San Dimas, CA 91773, (909) 394–8717.

i. *FERC Contact:* Any questions on this notice should be addressed to Allyson Lichtenfels at (202) 219–3274 or by e-mail at allyson.lichtenfels@ferc.fed.us.

j. *Deadline for Filing Comments and/or Motions:* November 15, 1999.

k. *Description of Filing:* Southern California Edison proposes to delete nonjurisdictional transmission facilities from the project license. The licensee filed revised exhibits K, L, and M to reflect changes to the transmission facilities and as-built conditions of the project. Project boundaries were modified accordingly to reflect these changes. The acreage of federal lands encompassed by the project will be reduced by 146.46 acres. No facilities will be physically removed from the project.

l. *Locations of the Application:* A copy of the application is available for inspection and reproduction at the Commission's Public Reference Room, located at 888 First Street, NE, Room 2A, Washington DC 20426, or by calling (202) 208–1371. This filing may be viewed on http://www.ferc.fed.us/online/rims.htm [call (202) 208–2222 for assistance]. A copy is also available for inspection and reproduction at the address in item h above.

m. Individuals desiring to be included on the Commission's mailing list should so indicate by writing to the Secretary of the Commission.

Comments, Protests, or Motions to Intervene—Anyone may submit comments, a protest, or a motion to intervene in accordance with the requirements of Rules of Practice and Procedure, 18 CFR 385.210, .211, .214. In determining the appropriate action to take, the Commission will consider all protests or other comments filed, but only those who file a motion to intervene in accordance with the Commission's Rules may become a party to the proceeding. Any comments, protests, or motions to intervene must be received on or before the specified comment date for the particular application.

Filing and Service of Responsive Documents—Any filings must bear in all capital letters the title ''COMMENTS'', ''RECOMMENDATIONS FOR TERMS AND CONDITIONS'', ''PROTEST'', or ''MOTION TO INTERVENE'', as applicable, and the Project Number of the particular application to which the filing refers. Any of the above-named documents must be filed by providing the original and the number of copies provided by the Commission's regulations to: The Secretary, Federal Energy Regulatory Commission, 888 First Street, NE, Washington, DC 20426. A copy of any motion to intervene must also be served upon each representative of the Applicant specified in the particular application.

Agency Comments—Federal, state, and local agencies are invited to file comments on the described application. A copy of the application may be obtained by agencies directly from the Applicant. If an agency does not file comments within the time specified for filing comments, it will be presumed to have no comments. One copy of an agency's comments must also be sent to the Applicant's representatives.

Linwood A. Watson, Jr.,

Acting Secretary.

[FR Doc. 99–26902 Filed 10–14–99; 8:45 am]

BILLING CODE 6717–01–M

ENVIRONMENTAL PROTECTION AGENCY

[FRL–6458–6]

Agency Information Collection Activities: Submission for OMB Review; Comment Request; General Hazardous Waste Facility Standards

AGENCY: Environmental Protection Agency (EPA).

ACTION: Notice.

SUMMARY: In compliance with the Paperwork Reduction Act (44 U.S.C. 3501 *et seq.*), this document announces that the following Information Collection Request (ICR) has been forwarded to the Office of Management and Budget (OMB) for review and approval: General Hazardous Waste Facility Standards, OMB Control Number 2050–0120, expiring on January 31, 2000. The ICR describes the nature of the information collection and its expected burden and cost; where appropriate, it includes the actual data collection instrument.

DATES: Comments must be submitted on or before November 15, 1999.

FOR FURTHER INFORMATION CONTACT: Sandy Farmer at EPA by phone at (202) 260–2740, by email at farmer.sandy@epamail.epa.gov, or download a copy of the ICR off the Internet at http://www.epa.gov/icr and refer to EPA ICR No. 1571.06.

SUPPLEMENTARY INFORMATION: *Title:* General Hazardous Waste Facility Standards, OMB Control No. 2050–0120, EPA ICR No. 1571.06, expiring on January 31, 2000. This is a request for extension of a currently approved collection.

Abstract: Section 3004 of the Resource Conservation and Recovery Act (RCRA), as amended, requires that the U.S. Environmental Protection Agency (EPA) develop standards for hazardous waste treatment, storage, and disposal facilities (TSDFs) as may be necessary to protect human health and the environment. Subsections 3004(a)(1), (3), (4), (5), and (6) specify that these standards include, but not be limited to, the following requirements:

- Maintaining records of all hazardous wastes identified or listed under subtitle C that are treated, stored, or disposed of, and the manner in which

such wastes were treated, stored, or disposed of;

- Operating methods, techniques, and practices for treatment, storage, or disposal of hazardous waste;
- Location, design, and construction of such hazardous waste treatment, disposal, or storage facilities;
- Contingency plans for effective action to minimize unanticipated damage from any treatment, storage, or disposal of any such hazardous waste; and
- Maintaining or operating such facilities and requiring such additional qualifications as to ownership, continuity of operation, training for personnel, and financial responsibility as may be necessary or desirable.

The regulations implementing these requirements are codified in the Code of Federal Regulations (CFR) Title 40, parts 264 and 265. The collection of this information enables EPA to properly determine whether owners/operators or hazardous waste treatment, storage, and disposal facilities meet the requirements of Section 3004(a) of RCRA. An agency may not conduct or sponsor, and a person is not required to respond to, a collection of information unless it displays a currently valid OMB control number. The OMB control numbers for EPA's regulations are listed in 40 CFR part 9 and 48 CFR Chapter 15. The **Federal Register** document required under 5 CFR 1320.8(d), soliciting comments on this collection of information was published on 6/17/99 (64 FR 32491); no comments were received.

Burden Statement: The annual public reporting and recordkeeping burden for this collection of information is estimated to average 313 hours per response. Burden means the total time, effort, or financial resources expended by persons to generate, maintain, retain, or disclose or provide information to or for a Federal agency. This includes the time needed to review instructions; develop, acquire, install, and utilize technology and systems for the purposes of collecting, validating, and verifying information, processing and maintaining information, and disclosing and providing information; adjust the existing ways to comply with any previously applicable instructions and requirements; train personnel to be able to respond to a collection of information; search data sources; complete and review the collection of information; and transmit or otherwise disclose the information.

Respondents/Affected Entities: Business.

Estimated Number of Respondents: 2,724.

Frequency of Response: Occasional.

Estimated Total Annual Hour Burden: 804,467 hours.

Estimated Total Annualized Capital, Operating/ Maintenance Cost Burden: $1,374,000.

Send comments on the Agency's need for this information, the accuracy of the provided burden estimates, and any suggested methods for minimizing respondent burden, including through the use of automated collection techniques to the following addresses. Please refer to EPA ICR No. 1571.06 and OMB Control No. 2050–0120 in any correspondence.

Ms. Sandy Farmer, U.S. Environmental Protection Agency, Office of Policy, Regulatory Information Division (2137), 401 M Street, SW, Washington, DC 20460;

and

Office of Information and Regulatory Affairs, Office of Management and Budget, Attention: Desk Officer for EPA, 725 17th Street, NW, Washington, DC 20503.

Dated: October 8, 1999.

Richard T. Westlund,

Acting Director, Regulatory Information Division.

[FR Doc. 99–26968 Filed 10–14–99; 8:45 am]

BILLING CODE 6560–50–P

ENVIRONMENTAL PROTECTION AGENCY

[FRL–6458–7]

Adequacy Status of Submitted State Implementation Plans for Transportation Conformity Purposes: Houston 9% Rate-of-Progress for Ozone and El Paso Section 179B International Border for Carbon Monoxide

AGENCY: Environmental Protection Agency (EPA).

ACTION: Notice of adequacy status.

SUMMARY: In this notice, EPA is announcing that the motor vehicle emissions budgets contained in the submitted Houston 9% Rate-of-Progress (ROP) for ozone and the El Paso Section 179B International Border carbon monoxide State Implementation Plans (SIP) are adequate for transportation conformity purposes. As a result of our determination, the budgets from the submitted Houston 9% ROP and the El Paso Section 179B International Border SIPs may be used for future conformity determinations in the Houston and El Paso areas, respectively. No comments were received during the public comment period.

DATES: These budgets are effective November 1, 1999.

FOR FURTHER INFORMATION CONTACT: Mr. J. Behnam, P.E., The U.S. Environmental Protection Agency, 1445 Ross Avenue, Dallas, Texas 75202; telephone (214) 665–7247.

SUPPLEMENTARY INFORMATION: Transportation conformity is required by section 176(c) of the Clean Air Act. The EPA's conformity rule, 40 CFR part 93, requires that transportation plans, programs, and projects conform to SIPs and establishes the criteria and procedures for determining whether or not they do. Conformity to a SIP means that transportation activities will not produce new air quality violations, worsen existing violations, or delay timely attainment of the national ambient air quality standards. The criteria by which EPA determines whether a SIP's motor vehicle emission budgets are adequate for conformity purposes are outlined in 40 CFR 93.118(e)(4). An adequacy review is separate from EPA's completeness review, and it should not be used to prejudge EPA's ultimate approval of the SIP. Even if we find a budget adequate, the SIP could later be disapproved.

On March 2, 1999, the D.C. Circuit Court of Appeals ruled that budgets contained in submitted SIPs cannot be used for conformity determinations unless EPA has affirmatively found the conformity budget adequate. We have described our process for determining the adequacy of submitted SIP budgets in the policy guidance dated May 14, 1999, and titled *Conformity Guidance on Implementation of March 2, 1999 Conformity Court Decision*. You may obtain a copy of this guidance from EPA's conformity web site: http://www.epa.gov/oms/traq (once there, click on ''conformity'' and then scroll down) or by contacting us at the address above.

By this notice, we are simply announcing the adequacy determinations that we have already made. On May 19, 1998, we received the Houston 9% ROP SIP which contained a volatile organic compounds budget of 132.68 tons/day and a nitrogen oxides budget of 283.01 tons/day. On September 27, 1995, we received the El Paso 179B International Border carbon monoxide SIP which contained a carbon monoxide budget of 96.9 tons/day. Notices that we had received these SIPs were posted on the EPA's website for a 30 day public comment period. The public comment period closed on July 7, 1999. We did not receive any comments. After the public comment process, we sent letters to the Texas Natural

Resource Conservation Commission stating that these budgets are adequate and can be used for conformity determinations.

Therefore, the budgets contained in the submitted SIPs as referenced above may be used for transportation conformity by the respective Metropolitan Planning Organizations in Houston and El Paso.

Dated: October 4, 1999.

Jerry Clifford,

Acting Regional Administrator, Region 6.

[FR Doc. 99–26969 Filed 10–14–99; 8:45 am]

BILLING CODE 6560–50–U

ENVIRONMENTAL PROTECTION AGENCY

[ER–FRL–6247–1]

Environmental Impact Statements; Notice of Availability

Responsible Agency: Office of Federal Activities, General Information (202) 564–7167 or (202) 564–7153.

Weekly receipt of Environmental Impact Statements

Filed October 04, 1999 Through October 08, 1999

Pursuant to 40 CFR 1506.9.

EIS No. 990358, FINAL EIS, AFS, UT, Wasatch Powderbird Guides Permit Renewal, Proposal to Conduct Guided Helicopter Skiing Activities on National Forest System Land, Issuance of a Special-Use-Permit, Wasatch-Cache National Forest, Uinta National Forest, Salt Lake County, UT, Due: November 15, 1999, Contact: Rob Cruz (801) 733–2685.

EIS No. 990359, FINAL EIS, COE, PA, Lackawanna River Flood Protection Project, To Provide the Plot and Green Ridge Reevaluation, Scranton Local Flood Protection, Lackawanna River, Lackawanna County, PA, Due: November 15, 1999, Contact: Michele Bistany (410) 962–4934.

EIS No. 990360, FINAL EIS, NOA, Calico Scallop Fishery and Sargassum Habitat Fishery, Fishery Management Plans Establishment and Implementation, South Atlantic Region, Due: November 15, 1999, Contact: Steve Branstetter (727) 570–5305.

The above FEIS close the Sargassum Fishery Management Plan Portion of DEIS ı980260, The Calico Scallop Fishery Management Plan portion of the DEIS will be closed at a later date.

EIS No. 990361, FINAL EIS, COE, TN, KY, Reelfoot Lake Project, Implementation of Wetland Preservation, Waterfowl Habitat Restoration, Fishery Improvement, Lake and Obion Counties, TN and Fulton County, KY, Due: November 15, 1999, Contact: Richard Hite (901) 544–0706.

EIS No. 990362, DRAFT EIS, AFS, MT, ID, Yellowstone Pipeline Missoula to Thompson Falls Reroute, Construction and Operation, Special-Use-Permit and Right-of-Way Easement, Missoula, Sanders and Mineral Counties, MT and Shoshone County, ID, Due: November 29, 1999, Contact: Terry Egenhoff (406) 329–3833.

EIS No. 990363, DRAFT EIS, AFS, OR, Five Rivers Watershed Landscape Management Project, To Restore Terrestrial and Aquatic Habitat, Special-Use-Permit, Siuslaw National Forest, Waldport Ranger District, Lincoln and Lane Counties, OR, Due: December 30, 1999, Contact: Doris Tai (541) 563–3211.

EIS No. 990364, FINAL SUPPLEMENT, FHW, IA, Central Business District Loop Arterial Construction, Harding Road and I–235 to US 65 at Scott Avenue, Funding and 404 Permit, Polk County, IA, Due: November 22, 1999, Contact: Bobby Blockmon (512) 233–7300.

EIS No. 990365, FINAL EIS, NRC, MD, Generic EIS—Calvert Cliffs Nuclear Power Plant Unit 1 and 2, License Renewal of Nuclear Plant, Calvert County, MD, Due: November 15, 1999, Contact: Thomas J. Kenyon (301) 415–1170.

EIS No. 990366, FINAL EIS, COE, CA, Tule River Basin Investigation Project, Plan to Increase Flood Protection Downstream of Success Dam and Increase Storage Space in Lake Success for Irrigation Water, Tule River, Tulace and King Counties, CA, Due: November 15, 1999, Contact: Mario Parker (916) 557–6701.

EIS No. 990367, DRAFT EIS, COE, CA, San Timoteo Creek Reach 3B Flood Control Project, Flood Protection, Construction, Operation and Maintenance, San Bernardino County, CA, Due: November 29, 1999, Contact: Joy Jaiswal (213) 452–3871.

EIS No. 990368, DRAFT EIS, BLM, NM, Albuquerque Field Office Riparian and Aquatic Habitats Management, To Restore and Protect, Rio Puerco Resource Management Plan Amendment (RMPA), Cibola, Sandoval, McKinley, Rio Arriba, Bernalillo, Valencia and Santa Fe Counties, NM, Due: January 12, 2000, Contact: Jim Silva (505) 761–8901.

EIS No. 990369, DRAFT EIS, BLM, NM, Farmington Field Office Riparian and Aquatic Habitat Management, To Restore and Protect, Farmington Riparian and Aquatic Habitat Management Plan, San Juan, McKinley, Rio Arriba and Sandoval Counties, NM, Due: January 12, 2000, Contact: Robert Moore (505) 599–6311.

EIS No. 990370, DRAFT EIS, BLM, NM, Las Cruces Field Office Riparian and Aquatic Habitat Management, To Restore and Protect, Mimbres Resource Management Plan, Dona Ana, Luna, Grant and Hidalgo Counties, NM, Due: January 12, 2000, Contact: Bill Merhege (505) 525–4369.

EIS No. 990371, DRAFT EIS, BLM, NM, Taos Field Office Riparian and Aquatic Habitat Management, To Restore and Protect, Colfax, Harding, Los Alamos, Mora, Rio Arriba, San Miquel, Santa Fe, Taos and Unison Counties, NM, Due: January 12, 2000, Contact: Pam Herrera (505) 751–4705.

Amended Notices

EIS No. 990229, DRAFT EIS, AFS, MT, NB, WY, ND, SD, Dakota Prairie Grasslands, Nebraska National Forest Units and Thunder Basin National Grassland, Land and Resource Management Plans 1999 Revisions, Implementation, MT, NB, WY, ND and SD, Due: November 29, 1999, Contact: Pam Gardner (308) 432–0300. Published FR 07–16–99 Review Period Extended. from 10–13–99 to 11–29–99.

EIS No. 990341, FINAL EIS, FHW, MS, Airport Parkway/Mississippi 25 Connectors, Construction Beginning at Intersection of High Street/ Interstate 55 (I–55), Ending at Mississippi 25, City of Jackson, Hinds and Rankin Counties, MS, Due: November 01, 1999, Contact: Cecil W. Vick, Jr. (601) 965–4217. Published FR 10–01–99 Correction to Title.

Dated: October 12, 1999.

William D. Dickerson,

Director, NEPA Compliance Division, Office of Federal Activities.

[FR Doc. 99–27017 Filed 10–14–99; 8:45 am]

BILLING CODE 6560–50–U

ENVIRONMENTAL PROTECTION AGENCY

[FRL–6458–2]

Determination of the Waste Isolation Pilot Plant's Compliance With Applicable Federal Environmental Laws for the Period October 1996–1998

AGENCY: Environmental Protection Agency (EPA).

ACTION: Notice.

SUMMARY: The U.S. Environmental Protection Agency (EPA) has

determined that, for the period October 1996 to October 1998, the U.S. Department of Energy (DOE) has submitted documentation that the Waste Isolation Pilot Plant (WIPP), operated by DOE, was in compliance with applicable Federal statutes, regulations, and permit requirements designated in Section 9(a)(1) of the WIPP Land Withdrawal Act, as amended. The Secretary of Energy was notified of the determination via letter from EPA Administrator Carol M. Browner dated October 7, 1999.

This determination is made under the authority of Section 9 of the WIPP Land Withdrawal Act (WIPP LWA). (Pub. L. 102–579 and 104–201.) Section 9(a)(1) of the WIPP LWA requires that, as of the date of the enactment of the WIPP LWA, DOE shall comply with respect to WIPP with (1) regulations for the management and storage of radioactive waste (40 CFR Part 191, Subpart A); (2) the Clean Air Act; (3) the Solid Waste Disposal Act; (4) the Safe Drinking Water Act; (5) the Toxic Substances Control Act; (6) the Comprehensive Environmental Response, Compensation, and Liability Act; and (7) all other applicable Federal laws pertaining to public health and safety or the environment. Section 9(a)(2) of the WIPP LWA requires DOE biennially to submit to EPA documentation of continued compliance with the laws, regulations, and permit requirements set forth in Section 9(a)(1). (DOE is required biennially to submit documentation of compliance with the Solid Waste Disposal Act to the State of New Mexico.) Section 9(a)(3) requires the Administrator of EPA to determine on a biennial basis, following the submittal of documentation of compliance by the Secretary of DOE, whether the WIPP is in compliance with the pertinent laws, regulations, and permit requirements, as set forth at Section 9(a)(1).

EPA has determined that for the period October 1996 to October 1998, DOE has submitted documentation which indicates continued compliance with 40 CFR Part 191, Subpart A, the Clean Air Act, the Safe Drinking Water Act, the Toxic Substances Control Act, and the Comprehensive Environmental Response, Compensation, and Liability Act. With respect to other applicable Federal laws pertaining to public health and safety or the environment, as required by Section 9(a)(1)(G), DOE's documentation also indicates that DOE was in compliance with the Clean Water Act, the Federal Insecticide, Fungicide, and Rodenticide Act (FIFRA), and certain statutes under the jurisdiction of the Department of Interior.

This determination is not in any way related to, or a part of, EPA's certification decision regarding whether the WIPP complies with the disposal standards for transuranic radioactive waste (40 CFR Part 191). EPA's certification rulemaking was conducted pursuant to Section 8(d) of the WIPP LWA and is wholly separate from this regulatory action.

FOR FURTHER INFORMATION CONTACT: Nick Stone; telephone number: 214–665–7226; address: WIPP Project Officer, Mail Code 6PD–N, U.S. Environmental Protection Agency, Region 6, 1445 Ross Avenue, Dallas, TX 75202. Materials related to this determination have been placed in Docket A–98–49, Item II–B3, located at the U.S. Environmental Protection Agency, Air Docket Section, Room M–1500, 401 M Street, SW, Washington, D.C. 20460. The docket is open for public inspection from 8:00 a.m. until 5:30 p.m., Monday through Friday, except on Federal holidays. A reasonable fee may be charged for photocopying services.

Dated: October 7, 1999.

Carol M. Browner,

Administrator.

[FR Doc. 99–26964 Filed 10–14–99; 8:45 am]

BILLING CODE 6560–50–U

ENVIRONMENTAL PROTECTION AGENCY

[FRL–6458–3]

Peer Review of Agency Strategy for Research on Environmental Risks to Children

AGENCY: Environmental Protection Agency (EPA).

ACTION: Notice of meeting.

SUMMARY: This notice announces a workshop organized by Eastern Research Group, Inc., a U.S. Environmental Protection Agency (EPA) contractor, to obtain scientific peer-review of an EPA Office of Research and Development (ORD) draft Research Strategy entitled: Strategy for Research on Environmental Risks to Children.

DATES: The peer review workshop will begin at 9:00 a.m. and end no later than 5:00 p.m. on Tuesday, November 9, 1999, and begin at 8:30 a.m. and end no earlier than 3:00 p.m. on Wednesday, November 10, 1999. Members of the public may attend as observers. Due to limited space, seating at the meetings will be on a first-come first-serve basis.

ADDRESSES: The peer review will be held at the Holiday Inn Capitol, 550 C Street, SW, Washington, DC 20024. To attend the workshop as an observer, contact Eastern Research Group, Inc., Telephone: (781) 674–7374. Space is limited so please register early.

AVAILABILITY OF REVIEW MATERIALS: An electronic version of the draft Research Strategy is accessible on EPA's National Center for Environmental Assessment (NCEA) home page via the Internet at http://www.epa.gov/ncea/new.htm.

FOR FURTHER INFORMATION CONTACT: The EPA has contracted with Eastern Research Group, Inc., (ERG, Inc., 110 Hartwell Avenue, Lexington, Massachusetts 02421). To attend the meeting as an observer, please preregister by calling ERG at 781–674–7374 or fax a registration request to 781–674–2906. Upon registration, you will be sent an agenda and a logistical fact sheet.

SUPPLEMENTARY INFORMATION: ERG is convening the peer review panel to review a draft Strategy for Research on Environmental Risks to Children. The peer review panel is requested to comment on the extent to which the Research Strategy clearly identifies the appropriate strategic directions for a core research program that will develop the methods, models, and measurements to strengthen the scientific foundation for risk assessments for children across EPA and to reduce children's risks.

The Research Strategy aims to strike a balance between research directed at basic issues, such as whether children are more susceptible or highly exposed to particular environmental substances, and research that will provide the methods and models to support risk assessments of environmental substances as they are conducted in the EPA Programs.

After considering recommendations from extramural advisory groups, as well as from senior scientists from across EPA's Program and Regional Offices, ORD has identified, in the Research Strategy, the strategic directions for its Children's Health Research Program. While the Research Strategy delineates the research areas comprising the framework for the Children's Health Research Program, the details of the research areas, including the scientific approach at the individual project level, and the anticipated products, performance measures, and schedules, will be included in subsequent research plans and are not a part of this Research Strategy. ERG is undertaking the establishment of a peer review panel to review the Research Strategy.

Dated: October 7, 1999.

Harold Zenick,

Acting Deputy Assistant Administrator for Science, Office of Research and Development.

[FR Doc. 99–26965 Filed 10–14–99; 8:45 am]

BILLING CODE 6560–50–U

ENVIRONMENTAL PROTECTION AGENCY

[PF–891; FRL–6099–6]

Notice of Filing Pesticide Petitions To Establish a Tolerance for Certain Pesticide Chemicals in or on Food

AGENCY: Environmental Protection Agency (EPA).

ACTION: Notice.

SUMMARY: This notice announces the initial filing of pesticide petitions proposing the establishment of regulations for residues of certain pesticide chemicals in or on various food commodities.

DATES: Comments, identified by docket control number PF–891, must be received on or before November 15, 1999.

ADDRESSES: Comments may be submitted by mail, electronically, or in person. Please follow the detailed instructions for each method as provided in Unit I.C. of the ''SUPPLEMENTARY INFORMATION'' section. To ensure proper receipt by EPA, it is imperative that you identify docket control number PF–891 in the subject line on the first page of your response.

FOR FURTHER INFORMATION CONTACT: The product manager listed in the table below:

Product Manager	Office location/telephone number/e-mail address	Address	Petition number(s)
Ann Sibold	Rm. 212, CM #2, 703–305–6502, e-mail: sibold.ann@epamail.epa.gov.	1921 Jefferson Davis Hwy, Arlington, VA	PP 6H5743
William Sproat	Rm. 6044, CM #2, 703–308–8587, e-mail: sproat.william@epamail.epa.gov.	Do.	PP 9F6043

SUPPLEMENTARY INFORMATION:

I. General Information

A. Does This Action Apply to Me?

You may be affected by this action if you are an agricultural producer, food manufacturer or pesticide manufacturer. Potentially affected categories and entities may include, but are not limited to:

Categories	NAICS	Examples of potentially affected entities
Industry	111	Crop production
	112	Animal production
	311	Food manufacturing
	32532	Pesticide manufacturing

This listing is not intended to be exhaustive, but rather provides a guide for readers regarding entities likely to be affected by this action. Other types of entities not listed in the table could also be affected. The North American Industrial Classification System (NAICS) codes have been provided to assist you and others in determining whether or not this action might apply to certain entities. If you have questions regarding the applicability of this action to a particular entity, consult the person listed in the ''FOR FURTHER INFORMATION CONTACT'' section.

B. How Can I Get Additional Information, Including Copies of This Document and Other Related Documents?

1. *Electronically*. You may obtain electronic copies of this document, and certain other related documents that might be available electronically, from the EPA Internet Home Page at http://www.epa.gov/. To access this document, on the Home Page select ''Laws and Regulations'' and then look up the entry for this document under the ''**Federal Register**--Environmental Documents.'' You can also go directly to the **Federal Register** listings at http://www.epa.gov/fedrgstr/.

2. *In person*. The Agency has established an official record for this action under docket control number PF–891. The official record consists of the documents specifically referenced in this action, any public comments received during an applicable comment period, and other information related to this action, including any information claimed as confidential business information (CBI). This official record includes the documents that are physically located in the docket, as well as the documents that are referenced in those documents. The public version of the official record does not include any information claimed as CBI. The public version of the official record, which includes printed, paper versions of any electronic comments submitted during an applicable comment period, is available for inspection in the Public Information and Records Integrity Branch (PIRIB), Rm. 119, Crystal Mall #2, 1921 Jefferson Davis Highway, Arlington, VA, from 8:30 a.m. to 4 p.m., Monday through Friday, excluding legal holidays. The PIRIB telephone number is (703) 305–5805.

C. How and to Whom Do I Submit Comments?

You may submit comments through the mail, in person, or electronically. To ensure proper receipt by EPA, it is imperative that you identify docket control number PF–891 in the subject line on the first page of your response.

1. *By mail*. Submit your comments to: Public Information and Records Integrity Branch (PIRIB), Information Resources and Services Division (7502C), Office of Pesticide Programs, Environmental Protection Agency, 401 M St., SW., Washington, DC 20460.

2. *In person or by courier*. Deliver your comments to: Public Information and Records Integrity Branch (PIRIB), Information Resources and Services Division (7502C), Office of Pesticide Programs (OPP), Environmental Protection Agency, Rm. 119, Crystal Mall #2, 1921 Jefferson Davis Highway, Arlington, VA. The PIRIB is open from 8:30 a.m. to 4 p.m., Monday through Friday, excluding legal holidays. The PIRIB telephone number is (703) 305–5805.

3. *Electronically*. You may submit your comments electronically by E-mail to: ''*opp-docket@epa.gov* ,'' or you can submit a computer disk as described above. Do not submit any information electronically that you consider to be CBI. Avoid the use of special characters

and any form of encryption. Electronic submissions will be accepted in Wordperfect 5.1/6.1 or ASCII file format. All comments in electronic form must be identified by docket control number PF–891. Electronic comments may also be filed online at many Federal Depository Libraries.

D. How Should I Handle CBI That I Want To Submit to the Agency?

Do not submit any information electronically that you consider to be CBI. You may claim information that you submit to EPA in response to this document as CBI by marking any part or all of that information as CBI. Information so marked will not be disclosed except in accordance with procedures set forth in 40 CFR part 2. In addition to one complete version of the comment that includes any information claimed as CBI, a copy of the comment that does not contain the information claimed as CBI must be submitted for inclusion in the public version of the official record. Information not marked confidential will be included in the public version of the official record without prior notice. If you have any questions about CBI or the procedures for claiming CBI, please consult the person identified in the ''FOR FURTHER INFORMATION CONTACT'' section.

E. What Should I Consider as I Prepare My Comments for EPA?

You may find the following suggestions helpful for preparing your comments:

1. Explain your views as clearly as possible.
2. Describe any assumptions that you used.
3. Provide copies of any technical information and/or data you used that support your views.
4. If you estimate potential burden or costs, explain how you arrived at the estimate that you provide.
5. Provide specific examples to illustrate your concerns.
6. Make sure to submit your comments by the deadline in this notice.
7. To ensure proper receipt by EPA, be sure to identify the docket control number assigned to this action in the subject line on the first page of your response. You may also provide the name, date, and **Federal Register** citation.

II. What Action Is the Agency Taking?

EPA has received pesticide petitions as follows proposing the establishment and/or amendment of regulations for residues of certain pesticide chemicals in or on various food commodities under section 408 of the Federal Food, Drug, and Comestic Act (FFDCA), 21 U.S.C. 346a. EPA has determined that these petitions contain data or information regarding the elements set forth in section 408(d)(2); however, EPA has not fully evaluated the sufficiency of the submitted data at this time or whether the data supports granting of the petition. Additional data may be needed before EPA rules on the petition.

List of Subjects

Environmental protection, Agricultural commodities, Feed additives, Food additives, Pesticides and pests, Reporting and recordkeeping requirements.

Dated: October 7, 1999.

James Jones,

Director, Registration Division, Office of Pesticide Programs.

Summaries of Petitions

The petitioner summaries of the pesticide petitions are printed below as required by section 408(d)(3) of the FFDCA. The summaries of the petitions were prepared by the petitioners and represent the views of the petitioners. EPA is publishing the petition summaries verbatim without editing them in any way. The petition summary announces the availability of a description of the analytical methods available to EPA for the detection and measurement of the pesticide chemical residues or an explanation of why no such method is needed.

1. AgrEvo Environmental Health

PP 6H5743

EPA has received a pesticide petition (PP 6H5743) from AgrEvo Environmental Health, 95 Chestnut Ridge Road, Montvale, NJ 07645 proposing, pursuant to section 408(d) of the Federal Food, Drug, and Cosmetic Act, 21 U.S.C. 346a(d), to amend 40 CFR part 180 by establishing a tolerance for residues of esbiothrin and S-bioallethrin in or on food/feed items as a result of applications in food/feed handling establishments at 1.0 parts per million (ppm). EPA has determined that the petition contains data or information regarding the elements set forth in section 408(d)(2) of the FFDCA; however, EPA has not fully evaluated the sufficiency of the submitted data at this time or whether the data supports granting of the petition. Additional data may be needed before EPA rules on the petition.

A. Residue Chemistry

1. *Plant metabolism*. The nature of the residues of esbiothrin and S-bioallethrin in plants relevant to the establishment of a food/feed additive tolerance is adequately understood. Metabolism data have been generated on tomatoes, wheat and lettuce as well as samples of these stored commodities. All degradates found from the metabolism samples had structures consistent with photoproducts of allethrin. Only very minor amounts of cleavage products were found, indicating that metabolic or abiotic cleavage was not occurring to any great extent. In view of the known rapid photodegradation of allethrin and related compounds, it is most likely that these products arose from photolysis, rather than metabolism. No metabolites of toxicological concern were identified. Therefore, the only residue of concern is allethrin.

2. *Analytical method*. Analytical methods for determining residues of allethrin in a variety of food commodities have been developed and submitted to the Agency. These methods use gas chromatography (GC) with quantitation by an electron capture detector (ECD) for determination of total allethrin residues. These methods have been validated and are appropriate for the determination of allethrin residues in a variety of food commodities after application in food/feed handling establishments.

3. *Magnitude of residues*. The magnitude of the residue study demonstrated that residues of esbiothrin and S-bioallethrin are not expected to exceed the proposed tolerance level of 1.0 ppm as a result of the use of these compounds in food/feed handling establishments.

B. Toxicological Profile

1. *Acute toxicity*—i. *S-bioallethrin*. The acute rat oral LD_{50} of S-bioallethrin was 574 milligrams/kilograms (mg/kg) (males) and 413 mg/kg (females) when administered in PEG 200 and 607 mg/kg (males) and 497 mg/kg (females) when administered in corn oil. The acute rabbit dermal LD_{50} was greater than 2,000 mg/kg. The acute rat inhalation LC_{50} was 1.26 milligrams per liter (mg/L). S-bioallethrin was found to be slightly irritating to rabbit eyes, non-irritating to rabbit skin, and did not elicit a sensitizing response in guinea pigs.

ii. *Esbiothrin*. The acute oral LD_{50} of esbiothrin in rats was 432.3 mg/kg (males) and 378 mg/kg (females). The acute dermal LD_{50} in rabbits was greater than 2,000 mg/kg. The acute inhalation LC_{50} in rats was 2.59 mg/L. Esbiothrin

was found to be non-irritating to rabbit eyes, slightly irritating to rabbit skin, and did not elicit a sensitizing response in guinea pigs.

2. *Genotoxicity*. No indication of genotoxicity was noted in a battery of *in vivo* and *in vitro* studies conducted with either S-bioallethrin or esbiothrin.

3. *Reproductive and developmental toxicity*—i. *S-bioallethrin*. In a rat developmental toxicity study, animals were administered S-bioallethrin at 0, 5, 20, and 80 mg/kg/day during gestation days 6-15. Maternal mortality, tremors, piloerection and body weight (bwt) changes were observed. No evidence of developmental toxicity was observed. The maternal no observed adverse effect levels (NOAEL) was 20 mg/kg/day. The developmental NOAEL was 80 mg/kg/day.

In a rabbit developmental toxicity study, animals were administered S-bioallethrin at 0, 5, 50, or 200 mg/kg/day during gestation days 6-19. Tremors and reduced bwts and food consumption were reported. The maternal NOAEL was 50 mg/kg/day. Some evidence of slight developmental delay and an associated increased incidence of extra ribs and vertebrae were noted at the 200 mg/kg/day level. However these findings were only observed at the maternally toxic dose. The developmental NOAEL was 50 mg/kg/day.

ii. *Esbiothrin*. In a developmental toxicity study, rats were administered 0, 5, 25, and 125 mg/kg/day esbiothrin during gestation days 6-15. The maternal NOAEL was 25 mg/kg/day based on mortality and excess salivation, urine staining of the abdominal fur, tremors, body jerks and hypersensitivity to sound. There were no indications of developmental toxicity. The developmental NOAEL was 125 mg/kg/day.

In a rabbit developmental toxicity study, animals were administered esbiothrin at 0, 30, 100, and 300 mg/kg/day during gestation days 6-18. The maternal NOAEL was 100 mg/kg/day based on deaths, tremors, decreased motor activity, and ataxia. There were no indications of developmental toxicity. The developmental NOAEL was 300 mg/kg/day.

In a 2-generation reproduction study, esbiothrin was administered to rats at dietary concentrations of 0, 70, 200, 600, and 1,800 ppm. Decreased body weights (bwts) and mortality were observed in F1 parental animals. Slight decreases in pup viability and pup weights were observed only in the F1 generation and were confined to four litters in the high dose group. The reproductive NOAEL was 600 ppm or 50.4 mg/kg/day.

4. *Subchronic toxicity*—i. *S-bioallethrin*. A 28–day dermal toxicity study was conducted with S-bioallethrin applied to the backs of rats at 0, 10, 100, or 1,000 mg/kg/day for 6 hours/exposure 5 days/week for a total of 28 exposures. There were no treatment-related effects observed. The NOAEL was 1,000 mg/kg/day.

A 28–day rat inhalation study was conducted with S-bioallethrin at analytical concentrations of 0 (air only), 0.0051, 0.025, and 0.073 mg/L. Animals were exposed for 6 hours/day, 5 days/week for a total of 4 weeks. Intermittent limb tremors, walking on ''tip toes,'' hunched posture, aggressive behavior and vocalizing when handled were observed at 0.025 and 0.073 mg/L. The NOAEL was 0.0051 mg/L.

In a 90–day feeding study, rats were administered S-bioallethrin at dietary concentrations of 0, 250, 500, 2,000, and 8,000 ppm. Reduced bwt gain, food and water consumption, and increased absolute and relative liver and thyroid weights were observed at 2,000 ppm and higher. Various microscopic findings were reported for liver, kidneys and the thyroid. The NOAEL was 250 ppm or 18.5 mg/kg/day.

In a 90–day feeding study, beagle dogs were administered S-bioallethrin at dietary concentrations of 0, 400, 1,000, and 2,250 ppm. Decreased bwt gains, muscle tremors, wasted body condition, and intermittent incidences of decreased activity, hunched posture, diarrhea, and increased absolute and relative liver weights were observed. Histopathologic examination of the liver revealed centrilobular hepatocyte enlargement. The NOAEL was 1,000 ppm (38.54 mg/kg/day).

ii. *Esbiothrin*. In a 21–day dermal toxicity study, rabbits were exposed to 0, 40, 200 and 1,000 mg/kg esbiothrin for 6 hours/day for 5 days/week for 3 weeks. There were no treatment-related systemic effects. Dermal effects were noted at all dose levels. The NOAEL for systemic toxicity was 1,000 mg/kg/day highest dose tested (HDT).

5. *Chronic toxicity*. In a 2–year toxicity/oncogenicity study, rats were administered 0, 100, 500, 1,500, or 4,500 ppm esbiothrin in the diet. Decreased bwt gain, increased liver enzymes and cholesterol levels, increased liver weights, hepatocellular hypertrophy and hepatic cell degeneration and necrosis were observed. There was no evidence of oncogenicity. The NOAEL was 500 ppm (27 mg/kg/day).

A 2–year toxicity/oncogenicity study was conducted with esbiothrin in mice at dietary concentrations of 0, 50, 250, or 1,250 ppm esbiothrin. Increased absolute and relative liver weights were observed. There was no evidence of oncogenicity. The NOAEL was 1,250 ppm (214.3 mg/kg/day).

In a 1–year feeding study, beagle dogs were administered dietary concentrations of 0, 80, 400, and 2,000 ppm esbiothrin. There were no toxicologically significant effects observed. The NOAEL for this study was 2,000 ppm (69.9 mg/kg/day).

6. *Animal metabolism*. It appears that absorption of the allethrins is dependent upon the vehicle and route of administration. However, once absorbed, the allethrins are readily excreted. The dermal absorption determined from a rat dermal absorption study was approximately 25% when administered in an aromatic hydrocarbon vehicle.

7. *Endocrine disruption*. No special studies have been conducted to investigate the potential of esbiothrin or S-bioallethrin to induce estrogenic or other endocrine effects. However, the standard battery of required toxicity studies has been completed. The studies include an evaluation of the potential effects on reproduction and development and an evaluation of the pathology of the endocrine organs following repeated or long-term exposure. These studies are generally considered to be sufficient to detect any endocrine effects, yet no such effects were detected. Thus, the potential for esbiothrin or S-bioallethrin to produce any significant endocrine effects is considered to be minimal.

C. Aggregate Exposure

Esbiothrin and S-bioallethrin are broad-spectrum insecticides used to control various pests in domestic indoor and outdoor areas (including use on pets), commercial and industrial food use areas and on ornamental plants. Thus, aggregate non-occupational exposure would include exposures resulting from non-food uses in addition to consumption of potential residues in food and water.

Both mixtures possess similar qualitative toxicologic profiles, but the overall weight of evidence indicates that the d-trans of d isomer is the most toxicologically significant isomer in these mixtures. Consequently, after converting into S-bioallethrin equivalents from esbiothrin data, or vice versa, based on the relative proportions of d-trans of d, the toxicity data for these mixtures can be used interchangeably.

1. *Dietary exposure—Food*. Since there are no agricultural uses with these active ingredients, an acute dietary exposure was not evaluated. According to EPA guidelines, food handling establishment uses should only be

evaluated for chronic dietary exposure. Potential chronic dietary exposures from food commodities under the proposed food and feed additive tolerance for esbiothrin and S-bioallethrin were estimated using the Exposure 1 software system (TAS, Inc.) and the 1977-78 USDA consumption data. Dietary risk assessment was conducted in a tiered approach whereby three scenarios were evaluated. The first scenario assumed 100% of all food and feed handling establishments (FHE) are treated with S-bioallethrin or esbiothrin and that all residues from these treatments are at the proposed tolerance level (1 ppm). The second scenario assumes that 100% of the FHE are treated and all residues are at the proposed tolerance level except where actual residue data are available. The third scenario assumes that, more realistically, only 25% of the FHE are treated and all residues are at the proposed tolerance level except for where actual residue data exist.

2. *Drinking water*. Exposure via drinking water is expected to be negligible since esbiothrin and S-bioallethrin are neither persistent in the environment nor likely to leach. As is characteristic of pyrethroids, the allethrins bind strongly to soil and will not be leached out by water. Further, this pyrethroid is rapidly degraded under environmental conditions (in soil, water and in the presence of sunlight). The half-life of esbiothrin and S-bioallethrin is approximately 7-15 minutes in sunlight and no more than 2 hours in total darkness. Due to these properties, no residues in drinking water are expected to be present.

3. *Non-dietary exposure*. As noted above, esbiothrin and S-bioallethrin are broad-spectrum insecticides developed for use in non-agricultural applications including indoor foggers, insect mats and coils, household commercial and institutional insect killers; food and feed handling applications, commercial non-food/feed sites, pet applications and greenhouse/ornamental applications. To evaluate non-dietary exposure, the ''flea infestation control,'' scenario was chosen to represent a plausible but worst-case non-dietary (indoor and outdoor) non-occupational exposure. This scenario provides a situation where S-bioallethrin and/or esbiothrin is commonly used and one in which both can be used concurrently for a multitude of uses, e.g. spot treatment of infested indoor surfaces such as carpets and rugs, treatment of pets and treatment of animal housing. This hypothetical situation provides a very conservative, upper bound estimate of potential non-dietary exposures. Consequently, if health risks are acceptable under these conditions, the potential risks associated with other more likely scenarios would also be acceptable.

Aggregate short-term risk was calculated by combining the risk calculated for the ''flea infestation'' scenario (non-dietary risk) with the chronic dietary risk analyses. As indicated previously, S-bioallethrin and esbiothrin possess similar qualitative toxicity profiles. Due to their isomeric mixtures, the product toxicity data for either product can be converted to the other after the appropriate conversions have been made based on relative proportions of the d-trans of d isomer content. For risk assessment purposes, S-bioallethrin will be used to assess the risk of S-bioallethrin and esbiothrin since it contains a greater proportion of the more toxicologically significant isomer, d-trans of d. As a result of using the data in this manner, a conservative, worst-case evaluation can be made.

D. Cumulative Effects

At the present time, there are insufficient data available to allow AgrEvo to properly evaluate the potential for cumulative effects from the various pyrethroids now being used, or from any other chemicals that may have similar mechanisms of toxicity. Furthermore, because of the need to utilize data from multiple registrants, such an analysis cannot be conducted by a single registrant. AgrEvo is currently participating in a joint industry effort to evaluate the potential aggregate risks from exposure to all pyrethroids but the results from this evaluation are not yet available.

As an interim measure, AgrEvo has evaluated the potential cumulative risks associated with exposure to three products in the allethrin series: bioallethrin, esbiothrin, and S-bioallethrin. These products contain varying proportions of d-trans chrysanthemate ester of d- and l-allethrolone (d-trans d and d-trans l). The uses for these products are very similar except that no food uses are being proposed for bioallethrin. The use rates for the three products differ based on relative efficacy which appears to be related to the percentage of the most active isomer (d-trans d). The risk assessments conducted in support of this petition were based on the worst-case assumption that all residues were from S-bioallethrin, the product with the highest percentage of the most active isomer. Therefore, the potential cumulative risks associated with a combination of all three of these products would actually be lower than those presented here.

E. Safety Determination

1. *U.S. population*. The combined toxicity and residue data base for esbiothrin and S-bioallethrin is considered to be valid, reliable and essentially complete. No evidence of oncogenicity has been observed. In accordance with EPA's ''Toxicology Endpoint Selection Process'' Guidance Document, the toxicology endpoint from the S-bioallethrin acute neurotoxicity study, 30 mg/kg, was used to evaluate acute non-dietary risk. According to current EPA policy, residues from Food Handling Establishment uses are only evaluated for potential chronic dietary risk. AgrEvo is proposing a RfD of 0.226 mg/kg bwt/day to evaluate chronic dietary risk for S-bioallethrin and esbiothrin. This RfD is based on the NOAEL from the esbiothrin rat chronic toxicity/oncogenicity study with a 100-fold safety factor to account for interspecies extrapolation and intraspecies variation. The S-bioallethrin NOAEL served as a worst-case scenario because it contains the largest amount of d-trans of d isomer by weight.

The potential chronic dietary exposure for the overall U.S. population under the three scenarios as described in section D utilize the following portions of the RfD: 10.73% for scenario 1 (100% FHE treated and all residues at the proposed tolerance level); 5.28% for the second scenario (100% FHE treated and all residues at proposed tolerance level except where actual data exist) and 1.32% of the third scenario (treatment of only 25% of FHE and residues at proposed tolerance except where actual data exist). There is generally no concern for chronic exposures below 100% of the RfD since it represents the level at or below which no appreciable risks to human health is posed.

Using an upper bound estimate of potential non-dietary exposure from a worst-case scenario (flea treatment) results in a margin of exposure (MOE) of approximately 610,000 for adults with S-bioallethrin and approximately 510,000 for esbiothrin.

Utilizing the scenario of chronic dietary exposure with an upper bound estimate of potential non-dietary exposure from a worst-case scenario (flea treatment), the resulting MOE for aggregate exposure to S-bioallethrin is 9,800 for the adult population and 8,100 for esbiothrin for the same population group.

There is generally no concern for MOEs greater than 100 or utilization of less than 100% RfD. Therefore, there is

reasonable certainty that no harm will result to the U.S. population in general from aggregate exposure to S-bioallethrin or esbiothrin.

2. *Infants and children*. Data from developmental toxicity studies in rats and rabbits and multi-generation reproduction studies in rats are generally used to assess the potential for increased sensitivity of infants and children. The developmental toxicity studies are designed to evaluate adverse effects on the developing organism resulting from pesticide exposure during prenatal development. Reproduction studies provide information relating to reproductive and other effects on adults and offspring from prenatal and postnatal exposure to the pesticide. None of the studies conducted with S-bioallethrin or esbiothrin indicated evidence of developmental or reproductive effects resulting from exposure to either material at non-maternally toxic doses.

FFDCA section 408 provides that EPA may apply an additional safety factor for infants and children in the case of threshold effects to account for prenatal and postnatal toxicity and the completeness of the data base. Based on the current toxicological data requirements, the data base relative to prenatal and postnatal effects in children is complete. No indication of increased susceptibility to younger animals was noted in the developmental or reproduction studies at non-maternally toxic doses or in the majority of studies with other pyrethroids. Therefore, use of the S-bioallethrin acute neurotoxicity NOAEL of 30 mg/kg for short-term risk, and the proposed RfD of 0.226 mg/kg/day for assessing chronic aggregate risk to infants and children is appropriate and an additional uncertainty factor is not warranted.

Using the dietary exposure assumptions described above in section D, the first scenario utilizes 41.98% of RfD for non-nursing infants (< 1–year) and 26.14% of RfD for children 1-6 years. The second scenario utilizes 11.96% of the RfD for non-nursing infants < 1–year and 11.54% of RfD for children 1-6 years. The third scenario utilizes 2.96% of RfD for non-nursing infants < 1–year and 2.88% of the RfD for children 1-6 years. There is generally no concern for chronic exposures below 100% of the RfD since it represents the level at or below which no appreciable risks to human health is posed.

Using an upper bound estimate of potential non-dietary exposures for a worst case scenario (flea infestation) results in a MOE of 2,300 for infants less than 1–year old for S-bioallethrin and 1,900 for esbiothrin. A MOE of 2,400 for children 1-6 years was noted for S-bioallethrin and a MOE of 2,000 for esbiothrin.

Utilizing the scenario of chronic dietary exposure with an upper bound estimate of potential non-dietary exposure from a worst case scenario (flea infestation), it can be seen that for aggregate exposure to S-bioallethrin and esbiothrin, the MOE for infants less than 1–year is 1,500 for S-bioallethrin and 1,200 for esbiothrin. For children 1–6 years, the MOE's are 1,600 for S-bioallethrin and 1,300 for esbiothrin.

As noted for the U.S. population, these compounds have a very short half-life in light and in darkness. These products are metabolized rapidly from the body and based on general practices, are applied not more than once per month. Based on these properties and use patterns, real-life exposures would be acute in nature and at much lower levels than used in this assessment.

There is generally no concern for MOE's greater than 100, or less than 100% utilization of RfD. Therefore, there is reasonable certainty that no harm will result to the most sensitive population subgroup, described as non-nursing infants less than 1–year and children 1–6 years, from aggregate exposure to esbiothrin and S-bioallethrin.

F. International Tolerances

Esbiothrin and S-bioallethrin are broad spectrum insecticides used throughout the world to control pests of ornamental plants, household, commercial and industrial areas (indoor and outdoor). There are currently no maximum residue limits (MRLs) for esbiothrin or S-bioallethrin.

2. ZENECA Ag Products

PP 9F6043

EPA has received a pesticide petition [9F6043] from ZENECA Ag Products, 1800 Concord Pike, Wilmington, DE 19850 proposing, pursuant to section 408(d) of the FFDCA, 21 U.S.C. 346a(d), to amend 40 CFR part 180 by establishing a tolerance for combined residues of pirimicarb 2-(dimethylamino)-5,6-dimethyl-4-pyrimidinyl dimethylcarbamate (9Cl) and its two carbamate metabolites: desmethyl pirimicarb and desmethylformamido pirimicarb, expressed as desmethyl pirimicarb in or on the raw agricultural commodities (RAC): potatoes and pre-blossom apples at 0.01 ppm, head lettuce at 0.3 ppm, leaf lettuce at 2.0 ppm, and endive (curly and escarole) at 2.0 ppm. EPA has determined that the petition contains data or information regarding the elements set forth in section 408(d)(2) of the FFDCA; however, EPA has not fully evaluated the sufficiency of the submitted data at this time or whether the data supports granting of the petition. Additional data may be needed before EPA rules on the petition.

A. Residue Chemistry

1. *Plant metabolism*. Studies of the nature of residues in three diverse crops, potatoes, apples, and lettuce, have demonstrated that pirimicarb undergoes very extensive metabolism, with the residues of concern in primary crops being both pirimicarb and its carbamate metabolites. Zeneca proposes that combined residues of pirimicarb, 2-(dimethylamino)-5,6-dimethyl-4-pyrimidinyl dimethylcarbamate (9Cl), and its two carbamate metabolites (desmethyl pirimicarb and desmethylformamido pirimicarb) expressed as desmethyl pirimicarb are to be included in the tolerance.

2. *Analytical method*. The analytical enforcement method uses Gas Chromatography (GC) equipped with a thermionic nitrogen specific detector. Crop samples are macerated with methanol and then filtered. After filtration, the methanol is evaporated and the samples resuspended and partitioned with hexane and hydrochloric acid. The samples are left overnight to allow conversion of the desmethylforamido pirimicarb metabolite to the desmethyl pirimicarb metabolite. The hexane layer is discarded and the acidic aqueous layer is further partitioned with ethyl acetate. Sodium hydroxide is added to the aqueous layer and pirimicarb and its carbamate metabolites are extracted with dichloromethane. This method has been validated by an independent laboratory, with a LOD of 0.01 ppm.

3. *Magnitude of residues*. Residue trials were conducted on potatoes, pre-blossom apples, and lettuce in the major crop growing areas of the United States. Sixteen residue trials were done on potatoes at the maximum label rate. At time of harvest, there were no detectable residues of either pirimicarb or its carbamate metabolites at the LOD of 0.01 ppm. A processing study on potatoes at 5x the maximum label rate also demonstrated that there are no detectable residues of pirimicarb or its carbamate metabolites at the LOD of 0.01 ppm on potatoes, potato peel, or any of the processed fractions (flakes and chips).

Sixteen residue trials were conducted on apples at the pre-blossom stage, using one application at the maximum label rate. At time of harvest, there were

no detectable residues of pirimicarb or its carbamate metabolites at the LOD of 0.01 ppm. An apple processing study at 5x the maximum label rate also demonstrated that there were no detectable residues of pirimicarb or its carbamate metabolites at the LOD of 0.01 ppm on apples, or any of the processed fractions (pomace, juice).

Six residue trials were completed on head lettuce at the maximum label rate. Mature lettuce leaves were analyzed for pirimicarb and its carbamate metabolites. Maximum residues of 0.24 ppm were detected for the combined residues of pirimicarb and its carbamate metabolites.

Six residue trials were completed on leaf lettuce at the maximum label rate. Mature lettuce leaves were analyzed for pirimicarb and its carbamate metabolites. Maximum residues of 1.73 ppm were detected for the combined residues of pirimicarb and its carbamate metabolites. ZENECA requests that the Agency also use these leaf lettuce residue trials as surrogate data for the commodity endive (curly and escarole).

B. Toxicological Profile

1. *Acute toxicity*. In common with other carbamate insecticides, pirimicarb induces toxic signs characteristic of cholinesterase inhibition. These effects are rapidly reversed on the cessation of treatment and recovery is usually full and complete.

Formulated pirimicarb (PIRIMOR DF) is classed as Category II toxicity based on the highest hazard for either the technical or formulated product.

PIRIMICARB TOXICITY SUMMARY

Toxicity test	Results	Toxicity category
Acute oral rat	LD_{50} 152 mg/kg (m),142 mg/kg (f)	II
Acute dermal rat ..	LD_{50} >1,000 mg/kg (f)	III
Acute inhalation rat.	0.95 mg/L (m); 0.86 mg/L (f)	III
Eye irritation rabbit	Non-irritant	IV
Skin irritation rabbit.	Slight irritant	IV
Skin sensitization	Moderate	May cause allergic reaction

FORMULATED MATERIAL (PIRIMOR DF) TOXICITY SUMMARY

Toxicity test	Results	Toxicity category
Acute oral rat	LD_{50} 87 mg/kg	II
Acute dermal rat ..	LD_{50} > 2,000 mg/kg	III
Acute inhalation rat.	1.7 mg/L (f)	III
Eye irritation rabbit	Moderate irritant	II
Skin irritation rabbit.	Slight irritant	IV
Skin sensitization	Not a sensitizer	- -

2. *Genotoxicity*. Pirimicarb has been evaluated for genotoxicity and mutagenicity. Pirimicarb does not induce gene mutation in either prokaryotic or non-mammalian eukaryotic cells.

3. *Reproductive and developmental toxicity*. Pirimicarb was not teratogenic to rats when tested in a study using oral gavage dose levels of 0, 10, 25, and 75 mg/kg/day. Fetotoxicity in the presence of maternal toxicity was observed at 75 mg/kg/day, but there were no effects on mother or fetus at a dose level of 25 mg/kg/day. The overall NOAELs for fetotoxicity was therefore, 25 mg/kg/day in the rat.

Pirimicarb was not teratogenic in the rabbit when tested in a study using oral gavage dose levels of 0, 2, 10, or 60 mg/kg/day. Maternal toxicity was observed at 60 mg/kg/day, but there were no effects on the fetus at any dose level. There was no evidence of fetotoxicity or teratogenicity in the rabbit at doses up to and including a maternally toxic dose of 60 mg/kg/day.

Neither study showed effects on the fetus in the absence of effects on the mother, and thus there was no evidence of enhanced fetal susceptibility to pirimicarb.

Pirimicarb showed no evidence of reproductive toxicity to rats in a 2–generation reproductive toxicity study using dose levels of 0, 50, 200, or 750 ppm. There were no effects on reproductive parameters at 750 ppm (88 mg/kg/day), the highest dose tested (HDT).

4. *Subchronic toxicity*—i. *Ninety–day rat feeding*. In an number of repeat dose studies, male and female rats were fed diets containing 0, 175, 250, or 750 ppm of pirimicarb for a period of 56-90 days. There were no adverse clinical, hematological, or pathological effects. The only effect was a reduction in body weight gain, which was clearly evident at 750 ppm in 2 studies, and one study showed slight effects at 250 ppm. The NOAEL for subchronic toxicity in the rat was concluded to be 175 ppm (17.5 mg/kg/day).

a. *Ninety–day dog feeding*. Groups of four male and four female beagle dogs were dosed with pirimicarb by capsule at 0, 0.4 or 1.8 mg/kg/day as an oral dose for a period of at least 90 days; a further group received pirimicarb at 4 mg/kg/day for 180 days. There were no adverse clinical or pathological effects, but the animals receiving 4 mg/kg/day showed evidence of increased erythropoetic activity on the bone marrow. The NOAEL in this study was 1.8 mg/kg/day.

b. *Twenty-one–day dermal study*. Pirimicarb was assessed for its sub-acute dermal toxicity. Groups of five male and five female rats were given 15, 6-hour dermal applications of 40, 200, or 1,000 mg/kg pirimicarb as a paste in deionized water over a period of 21 days. There was no signs of skin irritation and no indications of systemic toxicity. A small reduction in brain cholinesterase was found at 1,000 mg/kg. The NOAEL was 200 mg/kg.

5. *Neurotoxicity*-i. *Acute neurotoxicity*. In an acute neurotoxicity study, pirimicarb was administered as a single dose at levels of 0, 10, 40, or 110 mg/kg body weight. The animals were observed up to 14 days. A neurotoxicity screening battery of tests including a functional observational battery and quantitative measurement of motor activity was evaluated 1–week prior to the study, and on days 1, 8, and 15. Administration of 110 mg/kg resulted in early mortalities and adverse clinical signs. Brain neurotoxic esterase activity was not affected by treatment. Changes at the 40 mg/kg dose were transient and not accompanied by biologically significant reductions in brain or erythrocyte cholinesterase activity. It is concluded that pirimicarb shows reversible clinical signs of neurotoxicity following administration of a single oral dose of 110 mg/kg. The NOAEL for clinical signs of transient acute neurotoxicity is 40 mg/kg/day. The NOAEL for this study is 10 mg/kg/day.

ii. *Subchronic neurotoxicity*. A subchronic rat neurotoxicity study was performed. Pirimicarb was fed to rats at levels of 0, 75, 250, and 1,000 ppm for 90 days. A neurotoxicity screening battery of tests, including functional observational battery and quantitative assessment of motor activity was evaluated in week -1, 5, 9, and 14. Histopathological assessment and neurotoxic esterase activity in the brain was performed after 90 days. Reduced growth and food consumption/utilization were observed at 250 and

1,000 ppm. There were no treatment-related effects on the functional observational battery, motor activity, cholinesterase and neurotoxic esterase activities and neuropathology. The NOAEL for subchronic neurotoxicity was 1,000 ppm (approximately 81 mg/kg/day).

6. *Chronic toxicity*. In two chronic dog studies, dogs were dosed at levels up to 25 mg/kg/day for either 1 or 2 years. Pirimicarb produced hemolytic anemia or related hematological changes in a very small proportion of dogs. This effect was shown to require prolonged administration of pirimicarb and was reversible on cessation of exposure to pirimicarb. It was not observed in toxicity studies in the rat and mouse. A clear NOAEL of 3.5 mg/kg/day was established based on hematological changes in all of the available studies.

In a 2–year rat combined chronic toxicity and oncogenicity study, pirimicarb was fed for up to 2 years at 0, 75, 250, and 750 ppm. The maximum tolerated dose was 750 ppm, with no carcinogenic response over 2 years. A NOAEL was established at 3.7 mg/kg/day.

In an 80–week mouse carcinogenicity study, the mice were given pirimicarb at 0, 6.7, 26.6, and 93.5 mg/kg/day (0, 50 ppm, 200 ppm, and 700 ppm). It was concluded that there was an increase of incidence of benign lung tumors in female at the top dose of 700 ppm, only. These tumors are benign and demonstrate a clear threshold for induction, leading to the conclusion that pirimicarb is not carcinogenic in the mouse. This conclusion is further supported by evidence that pirimicarb is non-genotoxic. A NOAEL of 26.6 mg/kg/day was established.

7. *Animal metabolism*. Radiolabeled studies in the rat and dog have demonstrated that following oral administration, pirimicarb is well absorbed, extensively metabolized, and the metabolites are rapidly eliminated. Metabolism following a single oral dose is quantitatively similar in rats and dogs and there is no evidence of bioaccumulation.

8. *Metabolite toxicology*. Pirimicarb and the carbamate metabolites are associated with acute effects in cholinesterase inhibition.

9. *Endocrine disruption*. Pirimicarb shows no evidence of hormonal effects, therefore there is no evidence of endocrine disruption. There are no toxicity endpoints involving reproductive organs in either male or female animals in any of these studies.

C. Aggregate Exposure

1. *Dietary exposure*. Pirimicarb is registered for non-food use on seed alfalfa. The current request is to register pirimicarb on endive (curly and escarole). An acute RfD of 0.1 mg/kg/day is proposed, based on clinical signs of systemic toxicity seen at 40 mg/kg/day in the rat acute neurotoxicity study and application of a standard 100-fold uncertainty factor to the NOAEL of 10 mg/kg. There is no indication of sensitivity to children and infants, and therefore, no requirement for additional FQPA safety factor. The chronic RfD is 0.035 mg/kg/day, based on hematological effects noted in the chronic dog studies at 4 mg/kg/day and application of a standard 100-fold uncertainty factor to the NOAEL of 3.5 mg/kg/day.

i. *Food*—a. *Acute risk*. An acute dietary (food) risk assessment (Dietary Exposure Evaluation Model, Novigen Sciences Inc., 1997; USDA Continuing Survey of Food Intake by Individuals (CSFII) 1994-96) was conducted using tolerance level residues for raw agricultural commodities (RACs) and average field residues with percent crop treated for blended commodities (apple juice and dried potatoes). Resulting exposure values and percent of the acute RfD utilized are shown below:

ACUTE DIETARY (FOOD ONLY) EXPOSURE AND RISK FOR PIRIMICARB

Population subgroup	Exposure @ 99.9th Percentile (mg/kg/day)	Percent Acute RfD
U.S. population (48 States).	0.005044	5.04%
Non-nursing infants (<1 year).	0.000252	0.25%
Children (1-6 years).	0.003217	3.22%
Females (13-50) ...	0.005924	5.92%

For pirimicarb, an acceptable acute dietary exposure (food plus water) of 100% or less of the acute RfD for all population subgroups is needed to protect the safety of all population subgroups. The estimated exposure for all population subgroups at the 99.9th percentile utilized less than 100% of the acute RfD, and does not exceed EPA's level of concern.

b. *Chronic risk*. Chronic dietary risk assessments (Dietary Exposure Evaluation Model, Novigen Sciences Inc., 1997; USDA Continuing Survey of Food Intake by Individuals (CSFII) 1994-96) were conducted for pirimicarb using two approaches: (1) using tolerance level residues and assuming 100% crop treated, and (2) using anticipated residue concentration levels adjusted for percent crop treated and limit of detection residues. The Theoretical Maximum Residue Contribution (TMRC) and Anticipated Residue Contribution (ARC) from these two scenarios represents 0.3% and 0.1%, respectively, of the RfD for the U.S. population as a whole. The subgroup with the greatest chronic exposure is children ages one to six for which the TMRC and ARC estimates represented 0.4% and 0.1%, respectively of the RfD. The chronic dietary risks from these uses do not exceed EPA's level of concern.

ii. *Drinking water*. Other potential sources of exposure of the general population are residues in drinking water. Laboratory data on pirimicarb indicate that its potential soil mobility ranges between low and very high, depending on a number of factors including pH. However field dissipation data on both the parent and its metabolites indicate that under agricultural conditions, degradation is so rapid (half-lives < 21 days) that significant leaching does not occur. In a 1995-96 field dissipation study conducted using ^{14}C labeled material, the half-life of pirimicarb was found to average 3.1 days, and no radioactive residue (pirimicarb and/or metabolites) of greater than 0.01 ppm was found below 6 inches in depth. This study conducted in 1995-96 confirms previous laboratory and field dissipation studies.

Pirimicarb is rapidly dissipated under field conditions by both photolysis and microbial metabolism leading to significantly less persistence than demonstrated under conditions of laboratory soil degradation studies. This rapid dissipation under field conditions is independent of soil pH. Pirimicarb, therefore, does not leach and is unlikely to enter surface water under the conditions of the recommended label use patterns.

Drinking water levels of comparison (DWLOC) were calculated for pirimicarb for adults and children for both acute and chronic exposures, in accordance with EPA's Standard Operating Procedure (SOP) for Drinking Water Exposure and Risk Assessments (November 20, 1997). Drinking water exposure from surface and ground water for pirimicarb was estimated using Tier II model EPA's pesticide root zone model (PRZM)/EXAMS and Tier I model SCI-GROW, respectively. The exposure estimates and DWLOCs are summarized below:

DRINKING WATER LEVELS OF COMPARISON AND ACUTE EXPOSURE ESTIMATES FOR PIRIMICARB

Population subgroup	SCI-GROW (ug/L)[1]	PRZM/EXAMS (ug/L)[2]	Acute DWLOC (ug/L)
Adult - U.S. population.	0.25	4.66	3323
Children	0.25	4.66	968

[1] SCI-GROW estimate based on highest water estimate from all crop uses.

[2] PRZM/EXAMS based on instantaneous concentration for total carbamate residues (parent + metabolites)

DRINKING WATER LEVELS OF COMPARISON AND CHRONIC EXPOSURE ESTIMATES FOR PIRIMICARB

Population subgroup	SCI-GROW (ug/L)[1]	PRZM/EXAMS (ug/L)[2]	Chronic DWLOC (ug/L)
Adult - U.S. population	0.25	0.88	1224
Children	0.25	0.88	350

[1] SCI-GROW estimate based on highest water estimate from all crop uses.
[2] PRZM/EXAMS based on annualized average value for total carbamate residues (parent + metabolites).

Based on the estimated dietary and water exposures for pirimicarb, Zeneca has concluded that there is a reasonable certainty of no harm to infants, children and adults resulting from potential acute or chronic aggregate exposure to pirimicarb.

2. *Non-dietary exposure*. Pirimicarb is not registered for either indoor or outdoor residential uses. There are no non-occupational exposures to pirimicarb. Non-food uses for alfalfa grown for seed and small seeded vegetable seeds are occupational exposures. These exposures are represented in inhalation, oral and dermal estimates contained in the acute toxicology summaries, as well as the dermal penetration studies.

D. Cumulative Effects

Pirimicarb, as a carbamate insecticide, exerts its insecticidal effect through inhibition of acetyl-cholinesterase. At this time, methodologies and mechanistic data are not available to resolve this complex issue of cumulative effects concerning common mechanisms of toxicity. At this time, there are no available data to determine whether pirimicarb has a common mechanism of toxicity with other substances, or how to include this pesticide in a cumulative risk assessment.

E. Safety Determination

1. *U.S. population*. Based on the available toxicity data, a chronic RfD is set for pirimicarb at 0.035 mg/kg/day. This RfD is based on chronic dog studies with a NOAEL of 3.5 mg/kg/day and an uncertainty factor of 100. The acute RfD is 0.01 mg/kg/day, based on clinical signs of toxicity at 40 mg/kg/day in the rat acute neurotoxicity study. No additional uncertainty factors are necessary.

2. *Infants and children*. Developmental toxicity and reproductive toxicity studies have not shown fetal effects other than mild fetotoxicity in the rat (reduced fetus/litter weight and indications of delayed development) at doses which were also toxic to the mother. There was no evidence in these studies of any extra susceptibility of the fetus. Neither has there been any indication of any particular susceptibility of juvenile animals. Based on the data base, there is no reason to consider human infants and children to be inherently more at risk of toxicity from pirimicarb than adults.

FFDCA section 408 provides that EPA may apply an additional safety factor for infants and children in the case of threshold effects to account for prenatal and postnatal toxicity and the completeness of the data base. Based on the current toxicological data requirements, the data base relative to prenatal and postnatal effects for children is complete. No additional FQPA safety factor is required for pirimicarb.

F. International Tolerances

The CODEX maximum residue levels for pirimicarb and its carbamate metabolites (desmethyl and desmethyl formamido pirimicarb) are: potatoes 0.05 ppm, lettuce 1.0 ppm, and apples (pome fruit) 1.0 ppm.

[FR Doc. 99–26971 Filed 10–14–99; 8:45 am]

BILLING CODE 6560–50–F

ENVIRONMENTAL PROTECTION AGENCY

[OPP–181070; FRL–6389–6]

1, 3 Dichloropropene; Receipt of Application for Emergency Exemption, Solicitation of Public Comment

AGENCY: Environmental Protection Agency (EPA).

ACTION: Notice.

SUMMARY: EPA has received a specific exemption request from the State of California Department of Pesticide Regulation to use the pesticide 1,3 dichloropropene (CAS No. 542–75–6) to treat up to 50,000 acres of wine grapes to control Grape phylloxera and nematodes. The Applicant proposes the use of a chemical which is or has been the subject of a Special Review by the EPA. EPA is soliciting public comment before making the decision whether or not to grant the exemption.

DATES: Comments, identified by docket control number OPP–181070, must be received on or before November 1, 1999.

ADDRESSES: Comments may be submitted by mail, electronically, or in person. Please follow the detailed instructions for each method as provided in Unit I. of the ''SUPPLEMENTARY INFORMATION.'' To ensure proper receipt by EPA, it is imperative that you identify docket control number OPP–181070 in the subject line on the first page of your response.

FOR FURTHER INFORMATION CONTACT: Barbara Madden, Registration Division (7505C), Office of Pesticide Programs, Environmental Protection Agency, 401 M St., SW., Washington, DC 20460; telephone number: (703) 305–6463; fax

number: (703) 308–5433; e-mail address: madden.barbara@epa.gov.

SUPPLEMENTARY INFORMATION:

I. General Information

A. Does this Action Apply to Me?

You may be potentially affected by this action if you petition EPA for emergency exemption under section 18 of FIFRA. Potentially affected categories and entities may include, but are not limited to:

Categories	NAICS codes	Examples of potentially affected entities
State government	9241	State agencies that petition EPA for section 18 pesticide exemption

This listing is not intended to be exhaustive, but rather provides a guide for readers regarding entities likely to be regulated by this action. Other types of entities not listed in the table in this unit could also be regulated. The North American Industrial Classification System (NAICS) codes have been provided to assist you and others in determining whether or not this action applies to certain entities. To determine whether you or your business is affected by this action, you should consult the person listed under ''FOR FURTHER INFORMATION CONTACT.''

B. How Can I Get Additional Information, Including Copies of this Document and Other Related Documents?

1. *Electronically*. You may obtain electronic copies of this document, and certain other related documents that might be available electronically, from the EPA Internet Home Page at http://www.epa.gov/. To access this document, on the Home Page select ''Laws and Regulations'' and then look up the entry for this document under the ''**Federal Register**--Environmental Documents.'' You can also go directly to the **Federal Register** listings at http://www.epa.gov/fedrgstr/.

2. *In person*. The Agency has established an official record for this action under docket control number OPP–181070. The official record consists of the documents specifically referenced in this action, any public comments received during an applicable comment period, and other information related to this action, including any information claimed as Confidential Business Information (CBI). This official record includes the documents that are physically located in the docket, as well as the documents that are referenced in those documents. The public version of the official record does not include any information claimed as CBI. The public version of the official record, which includes printed, paper versions of any electronic comments submitted during an applicable comment period, is available for inspection in the Public Information and Records Integrity Branch (PIRIB), Rm. 119, Crystal Mall #2, 1921 Jefferson Davis Hwy., Arlington, VA, from 8:30 a.m. to 4 p.m., Monday through Friday, excluding legal holidays. The PIRIB telephone number is (703) 305–5805.

C. How and to Whom Do I Submit Comments?

You may submit comments through the mail, in person, or electronically. To ensure proper receipt by EPA, it is imperative that you identify docket control number OPP–181070 in the subject line on the first page of your response.

By mail. Submit your comments to: Public Information and Records Integrity Branch (PIRIB), Information Resources and Services Division (7502C), Office of Pesticide Programs (OPP), Environmental Protection Agency, 401 M St., SW., Washington, DC 20460.

2. *In person or by courier*. Deliver your comments to: Public Information and Records Integrity Branch (PIRIB), Information Resources and Services Division (7502C), Office of Pesticide Programs (OPP), Environmental Protection Agency, Rm. 119, Crystal Mall #2, 1921 Jefferson Davis Hwy., Arlington, VA. The PIRIB is open from 8:30 a.m. to 4 p.m., Monday through Friday, excluding legal holidays. The PIRIB telephone number is (703) 305–5805.

3. *Electronically*. You may submit your comments electronically by e-mail to: ''opp-docket@epa.gov,'' or you can submit a computer disk as described above. Do not submit any information electronically that you consider to be CBI. Avoid the use of special characters and any form of encryption. Electronic submissions will be accepted in WordPerfect 6.1/8.0 or ASCII file format. All comments in electronic form must be identified by docket control number OPP–181070. Electronic comments may also be filed online at many Federal Depository Libraries.

D. How Should I Handle CBI that I Want to Submit to the Agency?

Do not submit any information electronically that you consider to be CBI. You may claim information that you submit to EPA in response to this document as CBI by marking any part or all of that information as CBI. Information so marked will not be disclosed except in accordance with procedures set forth in 40 CFR part 2. In addition to one complete version of the comment that includes any information claimed as CBI, a copy of the comment that does not contain the information claimed as CBI must be submitted for inclusion in the public version of the official record. Information not marked confidential will be included in the public version of the official record without prior notice. If you have any questions about CBI or the procedures for claiming CBI, please consult the person listed under ''FOR FURTHER INFORMATION CONTACT.''

E. What Should I Consider as I Prepare My Comments for EPA?

You may find the following suggestions helpful for preparing your comments:

1. Explain your views as clearly as possible.
2. Describe any assumptions that you used.
3. Provide copies of any technical information and/or data you used that support your views.
4. If you estimate potential burden or costs, explain how you arrived at the estimate that you provide.
5. Provide specific examples to illustrate your concerns.
6. Offer alternative ways to improve the proposed rule or collection activity.
7. Make sure to submit your comments by the deadline in this document.
8. To ensure proper receipt by EPA, be sure to identify the docket control number assigned to this action in the subject line on the first page of your response. You may also provide the name, date, and **Federal Register** citation.

II. Background

A. What Action is the Agency Taking?

Under section 18 of the Federal Insecticide, Fungicide, and Rodenticide Act (FIFRA) (7 U.S.C. 136p), at the discretion of the Administrator, a Federal or State agency may be exempted from any provision of FIFRA if the Administrator determines that emergency conditions exist which require the exemption. The State of California Department of Pesticide Regulation has requested the Administrator to issue a specific exemption for the use of 1,3 dichloropropene on wine grapes to

control Grape phylloxera and nematodes. Information in accordance with 40 CFR part 166 was submitted as part of this request.

As part of this request, the Applicant asserts that significant damage from Grape phylloxera and nematodes have left growers suffering losses exceeding $1 billion over the past ten years. Growers are faced with an emergency because they do not have an effective tool in late spring and summer to control Grape phylloxera and nematodes. Specifically, the only effective means of control of phylloxera and nematodes is carbofuran, which is only available until May 1 and after harvest (which takes place in late fall). However, late spring and summer are critical times for control of Grape phylloxera and nematodes because their population levels tend to significantly increase during these periods. Results of efficacy research by the University Extension and the manufacturer indicate that 1,3 dichloropropene is a reliable effective control of Grape phylloxera and nematodes.

The Applicant proposes to make no more than four applications of 1,3 dichloropropene, to be applied through drip irrigation systems to 50,000 acres of wine grapes Statewide except in the counties of Alameda, Amador, Calaveras, El Dorado, Fresno, Kern, Kings, Lake, Madera, Merced, Monterey, Sacramento, San Benito, San Luis Obispo, Santa Barbara, Santa Clara, San Joaquin, Stanislaus, Tulare, and Yolo. A maximum of 8 gallons of product (containing 8.84 lbs ai per gallon) per acre could be applied to 50,000 acres for a total of 3,536,000 pounds of active ingredient applied.

This notice does not constitute a decision by EPA on the application itself. The regulations governing section 18 of FIFRA require publication of a notice of receipt of an application for a specific exemption proposing the use of an active ingredient that is or has been subject of a Special Review. On October 8, 1986 (51 FR 36160) (FRL–3092–4), a **Federal Register** notice announced the Special Review of 1,3 dichloropropene based on cancer concerns for workers. This notice provides an opportunity for public comment on the specific emergency exemption application.

The Agency, will review and consider all comments received during the comment period in determining whether to issue the emergency exemption requested by the State of California Department of Pesticide Regulation.

List of Subjects

Environmental protection, Pesticides and pests.

Dated: October 1, 1999.

Peter Caulkins,

Acting Director, Registration Division, Office of Pesticide Programs.

[FR Doc. 99–26970 Filed 10–14–99; 8:45 am]

BILLING CODE 6560–50–F

ENVIRONMENTAL PROTECTION AGENCY

[NCEA–CD–99–1015; FRL–6458–4]

Air Quality Criteria for Carbon Monoxide (Second External Review Draft)

AGENCY: Environmental Protection Agency.

ACTION: Notice of a draft for public review and comment.

SUMMARY: The U.S. Environmental Protection Agency (EPA), National Center for Environmental Assessment, is today announcing the availability of a second external review draft of the document, Air Quality Criteria for Carbon Monoxide. Required under sections 108 and 109 of the Clean Air Act, the purpose of this document is to provide an assessment of the latest, relevant scientific information that may have an impact on the next periodic review of the National Ambient Air Quality Standards (NAAQS) for carbon monoxide (CO).

DATES: Anyone who wishes to comment on the draft document, Air Quality Criteria for Carbon Monoxide, must submit the comments in writing no later than November 15, 1999. Send the written comments to the Project Manager for Carbon Monoxide, National Center for Environmental Assessment—RTP Office (MD–52), U.S. Environmental Protection Agency, Research Triangle Park, NC 27711.

ADDRESSES: To obtain a copy of the Air Quality Criteria for Carbon Monoxide (Second External Review Draft) 1999, EPA/600/P–99/001B, contact Ms. Diane Ray at the National Center for Environmental Assessment—RTP Office (MD–52), U.S. Environmental Protection Agency, Research Triangle Park, NC 27711; telephone: 1–919–541–3637; facsimile: 1–919–541–1818; E-mail: ray.diane@epa.gov. Please provide the title and the EPA number for the document. The document will be dispensed in CD ROM format unless the requestor requires a paper copy. Internet users may download a copy from the homepage for EPA's National Center for Environmental Assessment (NCEA). The URL is http://www.epa.gov/ncea/.

FOR FURTHER INFORMATION CONTACT: Mr. James Raub, National Center for Environmental Assessment—RTP Office (MD–52), U.S. Environmental Protection Agency, Research Triangle Park, NC 27711; telephone: 919–541–4157; facsimile: 919–541–1818; E-mail: raub.james@epa.gov.

SUPPLEMENTARY INFORMATION: The U.S. Environmental Protection Agency (EPA) is updating and revising, where appropriate, the EPA's Air Quality Criteria for Carbon Monoxide (CO). Sections 108 and 109 of the Clean Air Act require that the EPA carry out a periodic review and revision, where appropriate, of the criteria and the National Ambient Air Quality Standards (NAAQS) for the ''criteria'' air pollutants such as carbon monoxide.

After the completion of the comment period for the first external review draft, announced in the **Federal Register** on March 17, 1999 (64 FR 13198), and that draft's review by the Clean Air Scientific Advisory Committee (CASAC) in June 1999, the EPA revised the draft Air Quality Criteria for Carbon Monoxide. The Agency is now issuing a second external review draft for a thirty-day public comment period and for review before CASAC later in 1999. There will be a subsequent **Federal Register** notice to inform the public of the exact date and time of that CASAC meeting.

Dated: October 7, 1999.

William H. Farland,

Director, National Center for Environmental Assessment.

[FR Doc. 99–26966 Filed 10–14–99; 8:45 am]

BILLING CODE 6560–50–U

ENVIRONMENTAL PROTECTION AGENCY

[FRL–6458–5]

Sun Laboratories Superfund Site/ Atlanta, Georgia; Notice of Proposed Settlement

AGENCY: Environmental Protection Agency.

ACTION: Notice of proposed settlement.

SUMMARY: Under Section 122(h)(1) of the Comprehensive Environmental Response, Compensation and Liability Act (CERCLA), the Environmental Protection Agency (EPA) has proposed to settle claims for response costs at the Sun Laboratories Site (Site) located in Atlanta, Georgia, with Yoram Fishman. EPA will consider public comments on the proposed settlement for thirty days.

EPA may withdraw from or modify the proposed settlement should such comments disclose facts or considerations which indicate the proposed settlement is inappropriate, improper, or inadequate. Copies of the proposed settlement are available from: Ms. Paula V. Batchelor, U.S. Environmental Protection Agency, Region IV, Program Services Branch, Waste Management Division, 61 Forsyth Street, SW., Atlanta, Georgia 30303, (404) 562–8887.

Written comment may be submitted to Mr. Greg Armstrong at the above address within 30 days of the date of publication.

Dated: September 30, 1999.

Franklin E. Hill,

Chief, Program Services Branch.

[FR Doc. 99–26967 Filed 10–14–99; 8:45 am]

BILLING CODE 6560–50–U

EQUAL EMPLOYMENT OPPORTUNITY COMMISSION

Sunshine Act Meeting

DATE AND TIME: Tuesday, October 26, 1999, at 9:30 a.m.–12:00 noon and 1:30 p.m.–4:00 p.m. (Central Time).

PLACE: Harold Washington Social Security Center, First Floor Auditorium, 600 West Madison Street, Chicago, Illinois 60661.

STATUS: The meeting will be open to the public.

MATTERS TO BE CONSIDERED:

1. Announcement of Notation Votes, and
2. National Origin Discrimination Issues.

Note: Any matters not discussed or concluded may be carried over to a later meeting. (In addition to published notices on EEOC Commission meetings in the **Federal Register** the Commission also provides a recorded announcement a full week in advance on future Commission meetings). Please telephone (202) 663–7100 (voice) and (202) 633–4074 (TDD) at any time for information on these meetings.

CONTACT PERSON FOR MORE INFORMATION: Frances M. Hart, Executive Officer on (202) 663–4070.

Dated: October 13, 1999.

Bernadette B. Wilson,

Program Analyst, Executive Secretariat.

[FR Doc. 99–27132 Filed 10–13–99; 2:56 pm]

BILLING CODE 6750–06–M

FEDERAL COMMUNICATIONS COMMISSION

[FCC 99–272]

Year 2000 Network Stabilization Policy Statement

AGENCY: Federal Communications Commission.

ACTION: Policy statement.

SUMMARY: This document states the Commission's awareness of the potential effects on Year 2000 compliance of regulatory actions that require changes to computer systems and networks within the telecommunications industry. The Commission states its intention to consider industry requests for waivers, stays of regulatory requirements, and petitions for extensions as precaution against Year 2000 conversions made by industry in preparation for the Year 2000 rollover.

DATES: Effective October 15, 1999.

FOR FURTHER INFORMATION CONTACT: Paul Jackson, Office of Commissioner Michael Powell, (202) 418–2203 or via the Internet at pjackson@fcc.gov. Further information may also be obtained by calling the Commission's TTY number: 202–418–2989.

SUPPLEMENTARY INFORMATION: This is a summary of the Commission's FCC 99–272, adopted October 4, 1999, and released October 4, 1999. This document is available for inspection and copying during regular business hours in the FCC Reference Information Center, Room Cy–A257, 445 12th Street, SW, Washington, DC, and is available on the FCC's Internet site at *www.fcc.gov/Bureaus/Engineering__Notices/1999/*. This document may also be purchased from the Commission's duplication contractor, International Transcription Service, Inc. (202) 857–3800, 1231 20th Street, NW, Washington, DC 20036.

Summary of Policy Statement

1. The Federal Communications Commission (''Commission'') considers the Year 2000 (''Y2K'') Date Conversion Problem, or so-called Y2K Problem, to be one of the country's most pressing technical concerns. The Commission has worked deliberately and patiently to raise awareness of the Y2K Problem, monitor the efforts of industry to address it effectively, and facilitate the development of contingencies in event of unseen disruption scenarios.

2. In this regard, we are also concerned with the impact any of our regulations may have on the efforts already undertaken by the communications industry to prepare their systems for the year 2000 date-rollover. Accordingly, we herein adopt this ''Year 2000 Network Stabilization Policy Statement'' (hereinafter the ''Policy Statement''). We believe that by adopting the policies outlined in the statement we will facilitate the ability of all communications providers to establish stable and secure network environments necessary to continue to perform meaningful Y2K tests and to implement appropriate Y2K solutions prior to the January 1, 2000 millennial rollover.

3. The Policy Statement conveys the Commission's intention to consider industry requests for stay of regulatory requirements, where appropriate, as a precaution against potentially disruptive non-Year 2000-related modifications and upgrades made to various systems and networks pursuant to the implementation requirements of Communications Act of 1934 or the Commission's rules. We will consider these requests as they relate to any of the industries over which we have regulatory oversight including the wireline, wireless, radio and television broadcast, cable television, satellite and international telecommunications industries.

Background

4. The Y2K Problem is the inability of some computers and other related automated and intelligent systems to process correctly the millennial date conversion that will occur on January 1, 2000. In the 1950s and 1960s, computer designers and programmers, in order to reduce the need for expensive computer memory and data storage, developed the convention of storing calendar year dates using only the last two digits for the date year. Thus, the calendar year 1967 was represented as ''67.'' As a consequence, computerized systems and networks may erroneously assume ''00'' to be ''1900,'' not ''2000,'' and thereby not function properly in the year 2000. In some cases, the hardware and software will continue to work, but they will generate and process spurious data that may not be detected for months or even years after.

5. The Y2K Problem also has the potential to affect billions of systems and products that make use of microprocessors and so-called computer ''microchips''. Microprocessors and microchips can be found in a wide range of consumer products, such as toasters, washing machines, microwave ovens, dishwashers and video cassette recorders. They are used extensively in automobiles, trucks and other transportation vehicles. Microprocessors

and microchips are also used extensively in industrial applications such as environmental and climate control systems, manufacturing systems, and power distribution systems. Microchips and microprocessors are used extensively in communications systems.

6. The implications of the millennial date change problem are especially significant for the communications industry because communications rely upon the seamless interconnection of numerous disparate networks and systems. Consider hundreds of millions of users of communications services throughout the country transmit voice, data and video information through a communications infrastructure composed of wireline telephone networks, cellular and personal communications systems, satellite communication systems, broadcasting and cable television systems, and the Internet. Many critical programs, such as Federal Reserve electronic fund transfers and Medicare benefit payments, also depend upon this ubiquitous infrastructure and, consequently, could be seriously affected if the Y2K Problem interrupts telephone and data networking services.

Discussion

7. Ensuring the health of the critical communications ''nervous system'' is the collective task of industry, the Commission, and other interested stakeholders, not the least of whom are communications end-users. For their part, the major U.S. communications providers have generally worked aggressively to remediate their various systems and networks. The Network Reliability and Interoperability Council (''NRIC''), a federal advisory committee that reports directly to the FCC, recently conveyed to the Commission that the major communications companies reported having completed the remediation of 98% of their networks as of June 30, 1999. In the domestic context, the NRIC assessment addresses the Y2K-readiness of the country's local exchange carriers representing over 92 percent of the country's total access lines and of inter-exchange carriers whose revenue comprised approximately 82 percent of the industry total revenue for long-distance service.

8. By no means does industry contend that they have completed their testing and validation efforts. Consequently, NRIC represented that the current focuses of major carriers and providers remain steadfastly on testing and contingency planning at all levels. In this context, the major communications providers and prominent trade organizations have commenced a dialogue on the issue of network protection and stabilization to minimize problems associated with the Year 2000 changes.

9. The major communications companies have generally been working diligently during the past several years on Year 2000 remediation. Most companies have devoted tremendous amounts of executive management leadership, human resource assets, financial capital and technical expertise on both the direct and indirect effects of the problem. It has come to the Commission's attention that, in a number of instances, in both private industry and within the government, networks that were remediated, tested, and determined to be Year 2000-compliant have been disrupted by the addition of other systems, databases, and changes to networks not related to Year 2000. In effect, these changes threaten to ''undo'' Year 2000-remediation performed on networks, at a time when much work remains to be done.

10. Consequently, on a going-forward basis, the industry generally and many of the individual companies specifically are planning on implementing a network stabilization period in order to ensure the establishment of stable Year 2000-compliant environments. The industry maintains that the ''Commission needs to be sensitive to any and all rulemakings and orders which would impact computer systems and require software changes'' and advises the Commission ''to schedule and coordinate implementation requirements so they do not fall within the months in which software code is to remain unchanged.''

11. The issue of network protection and stabilization also has specifically arisen in a number of Commission proceedings. For instance, in considering an extension of time for the compliance date under Section 107 of the Communications Assistance for Law Enforcement Act, the Commission took into account the need to avoid the Y2K problem when it established a new compliance deadline of June 30, 2000. Moreover, the network stabilization period issue was also addressed in a proceeding involving a request for a waiver in New York of the ten-digit dialing requirement in the Commission's rule governing area code relief. In the Commission's Order, the Network Services Division of the FCC's Common Carrier Bureau stated that ''[w]e share Bell Atlantic's concern with the Year 2000 problem, and agree that its network stabilization period is prudent given the uncertainties associated with the Year 2000 problem.'' Consequently, the Division granted an extension of the temporary waiver until after the network stabilization period.

12. Because of concerns associated with Y2K, the FCC's Wireless Telecommunications Bureau also postponed the start of its planned cycle of paging auctions from December 9, 1999 to February 24, 2000. The bureau specifically noted in a public notice that it ''recognizes that [wireless companies] preparing their existing businesses for the Y2K roll-over while preparing for an auction could present formidable problems for potential bidders.''

13. We are also cognizant of the steps that other federal agencies have taken to address this issue. The Office of Management and Budget (''OMB'') transmitted a memorandum regarding the minimization of regulatory and information technology requirements that could affect Year 2000 conversion in May 1999. In relevant part, the memorandum counsels that Federal departments and agencies, to the extent possible given their respective statutory responsibilities, ''should not establish requirements that would have an adverse effect on [Year 2000] readiness, if such requirements can be delayed or if there is an alternative that would not have an adverse effect.''

14. The Securities and Exchange Commission (''SEC'') has also promulgated Year 2000-readiness guidelines. In August 1998, the SEC issued a policy statement regarding a regulatory moratorium to facilitate the Year 2000 conversion. The SEC's policy statement established a moratorium on the ''implementation of new [SEC] rules that require major reprogramming of computer systems by SEC-regulated entities between June 1, 1999 and March 31, 2000.''

Policy

15. Given the forgoing, the Commission establishes the following principles to facilitate the ability of all FCC-regulated entities to establish stable and secure network environments necessary to continue to perform meaningful Y2K tests and to implement appropriate Y2K solutions prior to the January 1, 2000 millennial rollover:

i. The Commission will consider, where applicable, the potential effects on Year 2000 remediation of regulatory actions that require changes to computerized systems and networks utilized by the communications industry.

ii. The Commission will consider industry requests for waivers, stays of regulatory requirements, and other

related petitions for extensions, where appropriate, as a precaution against potentially disruptive non-Year 2000-related modifications and upgrades made to various systems and networks pursuant to the implementation requirements of Communications Act of 1934 or the Commission's rules.

iii. The Commission reserves the express right to implement new rules and regulations, where such rulemaking is necessary or required to protect the public interest in response to statutory implementation requirements, emergency conditions or special circumstances that may arise in the days remaining prior to the millennial date roll-over. To reiterate, however, the Commission will be sensitive to individual waiver requests or, in the alternative, act on its own motion to stay rules during this short period of time.

iv. The Commission does not propose to establish a regulatory moratorium period in which all regulatory actions that may affect communication systems or equipment are suspended. We do not believe that such sweeping action is necessary to stabilize the industry's remedial efforts or to protect the interests of the public.

Conclusion

16. We reiterate that the Commission cautions parties against attempting to use our network stabilization policy to ''forestall'' or ''roll back'' disfavored regulations, or to use this policy for purposes of competitive advantage. This policy is intended solely to address the unique circumstances and challenges presented by the Year 2000 Problem.

Federal Communications Commission.

Magalie Roman Salas,

Secretary.

[FR Doc. 99–26962 Filed 10–14–99; 8:45 am]

BILLING CODE 6712–01–P

FEDERAL DEPOSIT INSURANCE CORPORATION

Agency Information Collection Activities: Submission for OMB Review; Comment Request

AGENCY: Federal Deposit Insurance Corporation (FDIC).

ACTION: Notice of information collection to be submitted to OMB for review and approval under the Paperwork Reduction Act of 1995.

SUMMARY: In accordance with requirements of the Paperwork Reduction Act of 1995 (44 U.S.C. 3501 *et seq.*), the FDIC hereby gives notice that it plans to submit to the Office of Management and Budget (OMB) a request for OMB review and approval of the information collection system described below.

Type of Review: Revision of a currently approved collection.

Title: External Auditing.

OMB Number: 3064–0113.

Estimate of Annual Burden:

Insured Institutions with assets of $500 million or more (already approved by OMB).

Number of Respondents: 420.

Number of Responses per Respondent: 3.

Total Annual Responses: 1,260.

Hours per Response: 32.

Total Annual Burden Hours: 40,320.

Insured Institutions with assets less than $500 million (proposed revision to be submitted to OMB).

Number of Respondents: 5,478.

Number of Responses per Respondent: 3.

Total Annual Responses: 16,434.

Hours per Response: 1/4 hour for the recordkeeping response, 1/4 hour for the first reporting response, and 1/4 hour for the second reporting response x 5,478 Respondents.

Total Annual Burden: 1,370 recordkeeping and 2,740 reporting = 4,110 hours.

Expiration Date of Current OMB Clearance: November 30, 2000.

OMB: Alexander T. Hunt, (202) 395–7860, Office of Management and Budget, Office of Information and Regulatory Affairs, Washington, DC 20503.

FDIC: Steven F. Hanft (202) 898–3907, Office of the Executive Secretary, Room F–4062, Federal Deposit Insurance Corporation, 550 17th Street NW, Washington, DC 20429.

Comments: Comments on this collection of information are welcome and should be submitted on or before November 15, 1999 to both the OMB reviewer and the FDIC contact listed above.

ADDRESSES: Information about this submission, including copies of the proposed collection of information, may be obtained by calling or writing the FDIC contact listed above.

SUPPLEMENTARY INFORMATION: The FDIC's regulations at 12 CFR 363 establish annual independent audit and reporting requirements for financial institutions with assets of $500 million or more. The requirements, which have been approved by OMB under control number 3064–0113, include an annual report on their financial statements, recordkeeping about management deliberations regarding external auditing and reports about changes in auditors. The FDIC is now preparing to ask OMB to approve revising the collection to cover financial institutions with assets less than $500 million on a voluntary basis. The information collected will be used to facilitate early identification of problems in financial management at financial institutions.

Federal Deposit Insurance Corporation.

Dated: October 12, 1999.

Robert E. Feldman,

Executive Secretary.

[FR Doc. 99–27010 Filed 10–14–99; 8:45 am]

BILLING CODE 6714–01–P

FEDERAL HOUSING FINANCE BOARD

[No. 99–N–14]

Federal Home Loan Bank Members Selected for Community Support Review

AGENCY: Federal Housing Finance Board.

ACTION: Notice.

SUMMARY: The Federal Housing Finance Board (Finance Board) is announcing the Federal Home Loan Bank (FHLBank) members it has selected for the 1998–99 seventh quarter review cycle under the Finance Board's community support requirement regulation. This notice also prescribes the deadline by which FHLBank members selected for review must submit Community Support Statements to the Finance Board.

DATES: FHLBank members selected for the 1998–99 seventh quarter review cycle under the Finance Board's community support requirement regulation must submit completed Community Support Statements to the Finance Board on or before November 29, 1999.

ADDRESSES: FHLBank members selected for the 1998–99 seventh quarter review cycle under the Finance Board's community support requirement regulation must submit completed Community Support Statements to the Finance Board either by regular mail: Office of Policy, Research and Analysis, Program Assistance Division, Federal Housing Finance Board, 1777 F Street, NW, Washington, DC 20006; or by electronic mail: MAXWELLA@FHFB.GOV.

FOR FURTHER INFORMATION CONTACT: Amy R. Maxwell, Housing Finance Officer, Office of Policy, Research and Analysis, Program Assistance Division, at 202/408–2882; at the following electronic mail address: MAXWELLA@FHFB.GOV; or at the Federal Housing Finance Board, 1777 F

Street, NW, Washington, DC 20006. A telecommunications device for deaf persons (TDD) is available at 202/408–2579.

SUPPLEMENTARY INFORMATION:

I. Selection for Community Support Review

Section 10(g)(1) of the Federal Home Loan Bank Act (Bank Act) requires the Finance Board to promulgate regulations establishing standards of community investment or service that FHLBank members must meet in order to maintain access to long-term advances. *See* 12 U.S.C. 1430(g)(1). The regulations promulgated by the Finance Board must take into account factors such as the FHLBank member's performance under the Community Reinvestment Act of 1977 (CRA), 12 U.S.C. 2901 *et seq.*, and record of lending to first-time homebuyers. *See* 12 U.S.C. 1430(g)(2). Pursuant to the requirements of section 10(g) of the Bank Act, the Finance Board has promulgated a community support requirements regulation that establishes standards a FHLBank member must meet in order to maintain access to long-term advances, and review criteria the Finance Board must apply in evaluating a member's community support performance. *See* 12 part 936. The regulation includes standards and criteria for the two statutory factors—CRA performance and record of lending to first-time homebuyers. 12 CFR 936.3. Only members subject to the CRA must meet the CRA standard. 12 CFR 936.3(b). All members, including those not subject to CRA, must meet the first-time homebuyer standard. 12 CFR 936.3(c).

Under the rule, the Finance Board selects approximately one-eighth of the members in each FHLBank district for community support review each calendar quarter. 12 CFR 936.2(a). The Finance Board will not review an institution's community support performance until it has been a FHLBank member for at least one year. Selection for review is not, nor should it be construed as, any indication of either the financial condition or the community support performance of the member.

Each FHLBank member selected for review must complete a Community Support Statement and submit it to the Finance Board by the November 29, 1999 deadline prescribed in this notice. 12 CFR 936.2(b)(1)(ii), (c). On or before October 30, 1999, each FHLBank will notify the members in its district that have been selected for the 1998–99 seventh quarter community support review cycle that they must complete and submit to the Finance Board by the deadline a Community Support Statement. 12 CFR 936.2(b)(2)(i). The member's FHLBank will provide a blank Community Support Statement Form, which also is available on the Finance Board's web site: WWW.FHFB.GOV. Upon request, the member's FHLBank also will provide assistance in completing the Community Support Statement.

The Finance Board has selected the following members for the 1998–99 seventh quarter community support review cycle:

Federal Home Loan Bank of Boston—District 1

American Savings Bank	New Britain	CT
Eastern Savings and Loan Association	Norwich	CT
Putnam Savings Bank	Putnam	CT
Belmont Savings Bank	Belmont	MA
The Lenox National Bank	Lenox	MA
Butler Bank—A Cooperative Bank	Lowell	MA
Enterprise Bank and Trust Company	Lowell	MA
Northmark Bank	North Andover	MA
RTN Federal Credit Union	Waltham	MA
Westborough Savings Bank	Westborough	MA
Commerce Bank and Trust Company	Worcester	MA
Merrill Merchants Bank	Bangor	ME
Union Trust Company	Ellsworth	ME
Fraser Employees Federal Credit Union	Medawaska	ME
Norway Savings Bank	Norway	ME
University of Maine Credit Union	Orono	ME
Infinity Federal Credit Union	Portland	ME
Maine Bank and Trust	Portland	ME
Bank of New Hampshire	Manchester	NH
Seaboard Federal Credit Union	Pawtucket	RI
New England Federal Credit Union	Williston	VT

Federal Home Loan Bank of New York—District 2

Cloverbank	Deptford	NJ
Medical Inter-Insurance Exchange	Lawrenceville	NJ
Millville Savings and Loan Association	Millville	NJ
Cenlar Federal Savings Bank	Trenton	NJ
Hamilton Savings Bank	Union City	NJ
Llewellyn-Edison Savings Bank, F.S.B	West Orange	NJ
State Employees Federal Credit Union	Albany	NY
Cortland Savings Bank	Cortland	NY
Flushing Savings Bank, F.S.B	Flushing	NY
Gouverneur Savings and Loan Association	Gouverneur	NY
WCTA Federal Credit Union	Sodus	NY
Power Federal Credit Union	Syracuse	NY
Homestead Savings, F.A	Utica	NY
Wyoming County Bank	Warsaw	NY
Community Mutual Savings Bank	White Plains	NY
Hudson Valley Bank	Yonkers	NY
Firstbank—Puerto Rico	Santurce	PR

Federal Home Loan Bank of Pittsburgh—District 3

Delaware Savings Bank	Wilmington	DE
Wilmington Trust FSB	Wilmington	DE
First Columbia Bank & Trust Company	Bloomsburg	PA
Fiidelity S&LA of Bucks County	Bristol	PA
Citizens Savings Association	Clarks Summit	PA
CSB Bank	Curwensville	PA
Fidelity Deposit and Discount Bank	Dunmore	PA
Lafayette Bank	Easton	PA
First National Bank in Fleetwood	Fleetwood	PA
Glen Rock State Bank	Glen Rock	PA
Swineford National Bank	Hummels Wharf	PA
S&T Bank	Indiana	PA
Jonestown Bank and Trust Company	Jonestown	PA
Commercial National Bank of Westmoreland Co	Latrobe	PA
Farmers First Bank	Lititz	PA
Members First Federal Credit Union	Mechanicsburg	PA
First National Bank of Mercersburg	Mercersburg	PA
Juniata Valley Bank	Mifflintown	PA
Mid Penn Bank	Millersburg	PA
Three Rivers Bank and Trust Company	Monroeville	PA
United Federal Credit Union	Nanty Glo	PA
Royal Bank of Pennsylvania	Narbeth	PA
Atlantic Employees Federal Credit Union	Newtown Square	PA
Peoples Bank of Oxford	Oxford	PA
Port Richmond Savings	Philadelphia	PA
Dwelling House Savings and Loan Association	Pittsburgh	PA
First Pennsylvania Savings Association	Pittsburgh	PA
Stanton Federal Savings Bank	Pittsburgh	PA
Union Bank and Trust Company	Pottsville	PA
Woodlands Bank	South Williamsport	PA
Citadel Federal Credit Union	Thorndale	PA
Turbotville National Bank	Turbotville	PA
Merck, Sharp & Dohme Federal Credit Union	West Point	PA
Greenbrier Valley National Bank	Lewisburg	WV
First Community Bank, Inc	Princeton	WV
Jefferson Security Bank	Shepherdstown	WV
One Valley Bank of Summersville Inc	Summersville	WV
Steel Works Community Federal Credit Union	Weirton	WV

Federal Home Loan Bank of Atlanta—District 4

Compass Bank (Alabama and Florida)	Birmingham	AL
National Bank of Commerce of Birmingham	Birmingham	AL
First National Bank of Shelby County	Columbiana	AL
Bank of Dadeville	Dadeville	AL
The Peoples Bank of Coffee County	Elba	AL
First Southern Bank	Florence	AL
Citizens Bank and Savings Company	Russellville	AL
Troy Bank and Trust Company	Troy	AL
Security Bank	Tuscaloosa	AL
State Bank and Trust	Winfield	AL
Crestar Bank	Washington	DC
IDB—IIC Federal Credit Union	Washington	DC
United States Senate Federal Credit Union	Washington	DC
First Federal Savings Bank of the Glades	Clewiston	FL
Merchants and Southern Bank	Gainesville	FL
Gibraltar Bank FSB	Hialeah	FL
Community Savings, F.A.	North Palm Beach	FL
Ocala National Bank	Ocala	FL
U.S. Trust Company of Florida Savings Bank	Palm Beach	FL
J.P. Morgan Florida Federal Savings Bank	Palm Way	FL
Bankers Insurance Company	St. Petersburg	FL
First Bank of Tallahassee	Tallahassee	FL
Suncoast Schools Federal Credit Union	Tampa	FL
Citrus Bank, N.A.	Vero Beach	FL
SunTrust Bank, Mid-Florida, N.A.	Winter Haven	FL
SunTrust Bank, South Georgia, N.A.	Albany	FL
CDC Federal Credit Union	Atlanta	GA
Bank of Camilla	Camilla	GA
Rabun County Bank	Clayton	GA
First State Bank of Donaldsonville	Donaldsonville	GA
Bank of Dodge County	Eastman	GA
Lanier National Bank	Gainesville	GA
The Gordon Bank	Gordon	GA

Planters Bank	Hawkinsville	GA
Bank of Hartwell	Lavonia	GA
Georgia State Bank	Mableton	GA
First South Bank	Macon	GA
SunTrust Bank, Middle Georgia, N.A.	Macon	GA
The United Banking Company	Nashville	GA
Pelham Banking Company	Pelham	GA
The Bank of Perry	Perry	GA
United Bank and Trust Company	Rockmart	GA
AmeriBank, N.A.	Savannah	GA
The Savannah Bank, N.A.	Savannah	GA
Citizens Community Bank	Valdosta	GA
Park Avenue Bank	Valdosta	GA
Citizens Bank	Vienna	GA
Oconee State Bank	Watkinsville	GA
Atlantic Coast Federal Credit Union	Waycross	GA
The Patterson Bank	Waycross	GA
Waycross Bank and Trust	Waycross	GA
First National Bank of Waynesboro	Waynesboro	GA
First National Bank	West Point	GA
Bradford Federal Savings Bank	Baltimore	MD
First Mariner Bank	Baltimore	MD
Fullerton Federal Savings Association	Baltimore	MD
Johns Hopkins Federal Credit Union	Baltimore	MD
Kosciuszko Federal Savings Bank	Baltimore	MD
Midstate Federal Savings and Loan Association	Baltimore	MD
Centreville National Bank of Maryland	Centreville	MD
Columbia Bank	Columbia	MD
County Banking and Trust Company	Elkton	MD
Bank of Glen Burnie	Glen Burnie	MD
Farmers and Merchants Bank and Trust	Hagerstown	MD
Sandy Spring National Bank of Maryland	Olney	MD
BUCS Federal Credit Union	Owings Mill	MD
Cedar Point Federal Credit Union	Patuxent River	MD
Peninsula Bank	Salisbury	MD
Sparks State Bank	Sparks	MD
Prince Georges Federal Savings Bank	Upper Marlboro	MD
Union National Bank	Westminster	MD
Carroll County Bank and Trust Company	Westminster	MD
Belmont Federal Savings and Loan Association	Belmont	NC
Black Mountain Savings Bank, SSB	Black Mountain	NC
Morganton Federal Savings and Loan	Morganton	NC
Coastal Federal Credit Union	Raleigh	NC
Security Savings Bank, SSB	Southport	NC
Bank of North Carolina	Thomasville	NC
Chesnee State Bank	Chesnee	SC
M.S. Bailey & Son, Bankers	Clinton	SC
Clover Community Bank	Clover	SC
Peoples National Bank	Easley	SC
Carolina First Bank	Greenville	SC
Lighthouse Community Bank	Hilton Head	SC
Williamsburg First National Bank	Kingstree	SC
The Anchor Bank	Myrtle Beach	SC
Arthur State Bank	Union	SC
Provident Community Bank	Union	SC
Woodruff State Bank	Woodruff	SC
Union Bank & Trust Company	Bowling Green	VA
First National Bank	Christiansburg	VA
National Bank of Fredericksburg	Fredericksburg	VA
F & M Bank—Massanutten	Harrisonburg	VA
Bank of McKenny	McKenny	VA
First Savings Bank of Virginia	Springfield	VA
Greater Atlantic Savings Bank, F.S.B.	Vienna	VA
Southern Financial Bank	Warrenton	VA

Federal Home Loan Bank of Cincinnati—District 5

Union National Bank and Trust Company	Barbourville	KY
Bank of Benton	Benton	KY
Trigg County Farmers Bank	Cadiz	KY
Taylor County Bank	Campbellsville	KY
First Federal Savings Bank	Elizabethtown	KY
City National Bank	Fulton	KY
Commonwealth Community Bank	Hartford	KY
The Citizens Bank	Hickman	KY
First State Bank	Irvington	KY

First Federal Savings & Loan of Lexington	Lexington	KY
The Progressive Bank	Lexington	KY
Traditional Bank, FSB	Lexington	KY
Whitaker Bank N.A.	Lexington	KY
Cumberland Valley National Bank & Trust Co.	London	KY
Inez Deposit Bank	Louisa	KY
First National Bank of Manchester	Manchester	KY
Green River Bank	Morgantown	KY
Citizens Bank	New Liberty	KY
Citizens National Bank	Paintsville	KY
West Point Bank	Radcliff	KY
Sebree Deposit Bank	Sebree	KY
Shelby County Trust Bank	Shelbyville	KY
The Peoples Bank	Taylorsville	KY
United Bank and Trust Company	Versailles	KY
Farmers & Merchants State Bank	Archbold	OH
Citizens Bank of Ashville	Ashville	OH
The Caldwell Savings and Loan Company	Caldwell	OH
CINCO Federal Credit Union	Cincinnati	OH
Century Federal Credit Union	Cleveland	OH
Pioneer Savings Bank	Cleveland	OH
Clyde-Findley Area Credit Union	Clyde	OH
Citizens Bank of Delphos	Delphos	OH
First FS&LA of Delta	Delta	OH
Ohio Central Savings	Dublin	OH
Croghan Colonial Bank	Fremont	OH
First Service Federal Credit Union	Groveport	OH
Killbuck Saving Bank Company	Killbuck	OH
OC Federal Credit Union	Maumee	OH
Old Fort Banking Company	Old Fort	OH
Cornerstone Bank	Springfield	OH
Glass City Federal Credit Union	Toledo	OH
Peoples Savings Bank of Troy	Troy	OH
First National Bank of Wellston	Wellston	OH
Metropolitan National Bank	Youngstown	OH
INSOUTH Bank	Brownsville	TN
First Federal Savings Bank	Clarksville	TN
The Bank/First Citizens Bank	Cleveland	TN
Peoples Bank	Clifton	TN
Bank of Dickson	Dickson	TN
The Home Bank of Tennessee	Ducktown	TN
Security Bank	Dyersburg	TN
Greeneville Federal Bank	Greeneville	TN
Citizens Bank	Hartsville	TN
Citizens Bank of Blount County	Maryville	TN
NBC–FSB, Knoxville	Memphis	TN
National Bank of Commerce	Memphis	TN
First Bank and Trust	Mt. Juliet	TN
First American National Bank	Nashville	TN
ORNL Federal Credit Union	Oak Ridge	TN
Bank of Sharon	Sharon	TN
Merchants and Planters Bank	Toone	TN
AEDC Federal Credit Union	Tullahoma	TN
First State Bank	Union City	TN

Federal Home Loan Bank of Indianapolis—District 6

Star Financial Bank	Anderson	IN
First Community Bank and Trust	Bargersville	IN
Hendricks County Bank and Trust Company	Brownsburg	IN
First Farmers Bank and Trust	Converse	IN
Bank of Western Indiana	Covington	IN
First National Bank of Dana	Dana	IN
Permanent Federal Savings Bank	Evansville	IN
Norwest Bank Indiana, NA	Fort Wayne	IN
Professional Federal Credit Union	Fort Wayne	IN
Garrett State Bank	Garrett	IN
Griffith Savings Bank	Griffith	IN
Eli Lilly Federal Credit Union	Indianapolis	IN
Indiana Members Credit Union	Indianapolis	IN
First National Bank	Kokomo	IN
Dearborn Savings Association, F.A	Lawrenceburg	IN
Farmers State Bank	Mentone	IN
North Salem State Bank	North Salem	IN
Ripley County Bank	Osgood	IN
Tri-County Bank & Trust Company	Roachdale	IN

Central Bank	Russiaville	IN
Teachers Credit Union	South Bend	IN
AmBank Indiana	Vincennes	IN
Bank of Lenawee	Adrian	MI
Republic Bank	Ann Arbor	MI
University Bank	Ann Arbor	MI
Blissfield State Bank	Blissfield	MI
Byron Center State Bank	Byron Center	MI
CSB Bank	Capac	MI
Independent Bank of East Michigan	Caro	MI
Exchange State Bank	Carsonville	MI
First National Bank and Trust	Crystal Falls	MI
State Savings Bank	Frankfort	MI
First National Bank of Gaylord	Gaylord	MI
First of America Bank, N.A	Grand Rapids	MI
First Community Bank	Harbor Springs	MI
MFC First National Bank	Ironwood	MI
G.W. Jones Exchange Bank	Marcellus	MI
Shelby State Bank	Shelby	MI
Choice One Bank	Sparta	MI
Midwest Guaranty Bank	Troy	MI

Federal Home Loan Bank of Chicago—District 7

State Bank of the Lakes	Antioch	IL
Aurora National Bank	Aurora	IL
First National Bank of Ava	Ava	IL
Farmers State Bank of Buffalo	Buffalo	IL
TCF National Bank Illinois	Burr Ridge	IL
American Union Savings and Loan Association	Chicago	IL
Cole Taylor Bank	Chicago	IL
First Bank of the Americas, S.S.B.	Chicago	IL
First East Side Savings Bank	Chicago	IL
International Bank of Chicago	Chicago	IL
LaSalle Bank FSB	Chicago	IL
LaSalle National Bank	Chicago	IL
Park Federal Savings Bank	Chicago	IL
Selfreliance Ukranian Federal Credit Union	Chicago	IL
The PrivateBank and Trust Company	Chicago	IL
First National Bank	Chicago Heights	IL
Cissna Park State Bank	Cissna Park	IL
GreatBank, N.A	Evanston	IL
The People's National Bank of McLeansboro	Fairfield	IL
National Bank	Hillsboro	IL
Farmers State Bank of Hoffman	Hoffman	IL
Community Trust Bank	Irvington	IL
Advance Bank, s.b	Lansing	IL
First Midwest Bank N.A	Moline	IL
Midwest Bank of Southern Illinois	Monmouth	IL
Bank of Illinois in Normal	Normal	IL
Hemlock Federal Bank	Oak Forest	IL
Community Bank & Trust, NA	Olney	IL
Palos Bank and Trust Company	Palos Heights	IL
Citizens Equity Federal Credit Union	Peoria	IL
Pontiac National Bank	Pontiac	IL
First Bankers Trust Company, N.A	Quincy	IL
Banco Popular	River Grove	IL
AMCORE Bank N.A. Rockford	Rockford	IL
The First National Bank in Toledo	Toledo	IL
Busey Bank	Urbana	IL
Household Bank, f.s.b	Wood Dale	IL
Fox Communities Credit Union	Appleton	WI
First National Bank and Trust Company	Beloit	WI
Citizens State Bank	Cadott	WI
Bank of Buffalo	Cochrane	WI
Denmark State Bank	Denmark	WI
Security National Bank of Durand	Durand	WI
Union Bank and Trust Company	Evansville	WI
1st Security Credit Union	Green Bay	WI
Mitchell Savings Bank	Greenfield	WI
Johnson Bank Hayward	Hayward	WI
State Bank of Howards Grove	Howards Grove	WI
State Bank of La Crosse	La Crosse	WI
Trane Federal Credit Union	La Crosse	WI
Capitol Bank	Madison	WI
The Park Bank	Madison	WI

Marion State Bank	Marion	WI
Bay View Federal Savings & Loan Association	Milwaukee	WI
TCF National Bank Wisconsin	Milwaukee	WI
Farmers Savings Bank	Mineral Point	WI
Bank of Mondovi	Mondovi	WI
The Necedah Bank	Necedah	WI
Farmers Exchange Bank of Neshkoro	Neshkoro	WI
Associated Bank Portage, NA	Portage	WI
Hometown Bank	St. Cloud	WI
Community State Bank	Union Grove	WI
American Community Bank	Wausau	WI
Associated Bank North	Wausau	WI

Federal Home Loan Bank of Des Moines—District 8

Union National Bank	Anita	IA
Quad City Bank and Trust	Bettendorf	IA
Exchange State Bank	Collins	IA
Mercantile Bank of Midwest	Des Moines	IA
Security Savings Bank	Eagle Grove	IA
Iowa State Bank and Trust Company	Fairfield	IA
First Bank and Trust Company	Glidden	IA
American National Bank	Holstein	IA
Home State Bank	Jefferson	IA
Security Savings Bank	Larchwood	IA
Farmers & Merchants Savings Bank	Manchester	IA
Tama State Bank	Marshalltown	IA
First Citizens National Bank	Mason City	IA
Northwoods State Bank	Mason City	IA
First Iowa Bank	Monticello	IA
Farmers Savings Bank	Oskaloosa	IA
Pilot Grove Savings Bank	Pilot Grove	IA
Frontier Bank	Rock Rapids	IA
Alliance Bank	Rockwell City	IA
Citizens State Bank	Sheldon	IA
First National Bank	Shenandoah	IA
Morningside Bank & Trust	Sioux City	IA
Cedar Valley State Bank	St. Ansgar	IA
First American Bank	Webster City	IA
First Bank	West Des Moines	IA
NCMIC Insurance Company	West Des Moines	IA
Peoples State Bank	Winthrop	IA
Security Bank Minnesota	Albert Lea	MN
First Security Bank	Byron	MN
Miners National Bank of Eveleth	Eveleth	MN
American Bank of the North	Grand Rapids	MN
National City Bank of Minneapolis	Minneapolis	MN
State Bank of Young America	Norwood	MN
Peoples State Bank of Plainview	Plainview	MN
United Prairie Bank-Slayton	Slayton	MN
First Security State Bank	Sleepy Eye	MN
Cherokee State Bank of St. Paul	St. Paul	MN
The First National Bank in Wadena	Wadena	MN
Wadena State Bank	Wadena	MN
Polk County Bank	Bolivar	MO
First Security State Bank	Charleston	MO
Peoples Bank	Cuba	MO
Century Bank of the Ozarks	Gainesville	MO
The Hamilton Bank	Hamilton	MO
Farmers and Merchants Bank	Hannibal	MO
City National Savings Bank, FSB	Jefferson City	MO
Premier Bank	Jefferson City	MO
B&L Bank	Lexington	MO
First Bank, CBC	Maryville	MO
Bank of Minden	Mindenmines	MO
Bank of Cairo and Moberly	Moberly	MO
St. Clair County State Bank	Osceola	MO
Platte Valley Bank of Missouri	Platte City	MO
Farmers State Bank of Northern Missouri	Savannah	MO
Central Bank of Missouri	Sedalia	MO
Great Southern Bank, FSB	Springfield	MO
Equality Savings Bank	St. Louis	MO
Ramsey Bank, F.S.B	Cando	ND
Gate City Federal Savings Bank	Fargo	ND
State Bank of Alcester	Alcester	SD
First Madison Bank	Madison	SD

Federal Home Loan Bank of Dallas—District 9

First National Bank of Izard County	Calico Rock	AR
Bank of Elkins	Elkins	AR
First Federal Bank, F.A	Harrison	AR
Simmons First Bank of Jonesboro	Jonesboro	AR
Central Bank and Trust	Little Rock	AR
Mercantile Bank of Arkansas	Little Rock	AR
Simmons First Bank of Russellville	Russellville	AR
Warren Bank and Trust	Warren	AR
Security First National Bank	Alexandria	LA
Mississippi River Bank	Belle Chasse	LA
Citizens Savings Bank	Bogalusa	LA
Homeland Federal Savings Bank	Columbia	LA
Vermilion Bank and Trust Company	Kaplan	LA
Peoples State Bank	Many	LA
City Bank and Trust Company	Natchitoches	LA
Bradford National Life Insurance Company	New Orleans	LA
First Bank and Trust	New Orleans	LA
First Federal Savings and Loan Association	Opelousas	LA
ANECA Federal Credit Union	Shreveport	LA
Federal Savings Bank of Evangeline Parish	Ville Platte	LA
Bank of Anguilla	Anguilla	MS
Guaranty Bank & Trust Company	Belzoni	MS
The Carthage Bank	Carthage	MS
First National Bank	Clarksdale	MS
Bank of Forest	Forest	MS
Hancock Bank	Gulfport	MS
Merchants and Farmers Bank	Kosciusko	MS
Citizens State Bank	Magee	MS
First National Bank of Picayune	Picayune	MS
The Peoples Bank	Ripley	MS
First National Bank in Alamogordo	Alamogordo	NM
New Mexico Educators Federal Credit Union	Albuquerque	NM
Ranchers Bank	Belen	NM
FirstBank	Clovis	NM
White Sands Federal Credit Union	Las Cruces	NM
First State Bank of Taos	Taos	NM
University Federal Credit Union	Austin	TX
Citizens National Bank	Brownwood	TX
Columbus State Bank	Columbus	TX
Lone Star Bank	Dallas	TX
Share Plus Federal Credit Union	Dallas	TX
Texas Community Bank and Trust	Dallas	TX
First Federal Savings Bank of North Texas	Denton	TX
First National Bank of Ennis	Ennis	TX
Millers Mutual Fire Insurance Company	Fort Worth	TX
Graham Savings and Loan, F.A	Graham	TX
Bank United	Houston	TX
PT&T Federal Credit Union	Houston	TX
Jacksonville Savings Bank, ssb	Jacksonville	TX
American State Bank	Lubbock	TX
Marble Falls National Bank	Marble Falls	TX
First Bank and Trust of Memphis	Memphis	TX
Liberty National Bank in Paris	Paris	TX
Security State Bank	Pearsall	TX
Hale County State Bank	Plainview	TX
First International Bank	Plano	TX
Legacy Bank of Texas	Plano	TX
The Farmers National Bank	Rule	TX
CaminoReal Bank, N.A	San Antonio	TX
First National Bank of San Benito	San Benito	TX
Texas Savings Bank, s.s.b	Snyder	TX
Mainland Bank	Texas City	TX
First Bank of Texas	Tomball	TX
The First National Bank of Van Alstyne	Van Alstyne	TX
Herring National Bank of Vernon	Vernon	TX
Community Bank	Wellington	TX

Federal Home Loan Bank of Topeka—District 10

MegaBank of Arapahoe	Englewood	CO
Bank of Colorado	Fort Lupton	CO
Alpine Bank	Glenwood Springs	CO
First Western National Bank	La Jara	CO
First National Bank of Las Animas	Las Animas	CO

FirstBank of Arapahoe County, N.A	Littleton	CO
Mancos Valley Bank	Mancos	CO
The Pueblo Bank and Trust Company	Pueblo	CO
The Salida Building and Loan Association	Salida	CO
Community National Bank	Chanute	KS
Fidelity State Bank and Trust Company	Dodge City	KS
First State Bank	Edna	KS
Armed Forces Bank	Fort Leavenworth	KS
Kansas State Bank	Holton	KS
Heartland Bank, N.A	Jewell	KS
First National Bank and Trust Company	Junction City	KS
First State Bank of Kansas City	Kansas City	KS
Premier Bank	Lenexa	KS
First Commercial Bank, N.A	Overland Park	KS
Metcalf Bank	Overland Park	KS
Team Bank, N.A	Paola	KS
City National Bank of Pittsburg	Pittsburg	KS
Citizens State Bank and Trust Company	Seneca	KS
Community National Bank	Seneca	KS
Mid America Credit Union	Wichita	KS
First National Bank and Trust	Fullerton	NE
Five Points Bank	Grand Island	NE
City National Bank and Trust Company	Hastings	NE
First State Bank	Hickman	NE
First National Bank and Trust Co. of Minden	Minden	NE
Pinnacle Bank	Neligh	NE
Western Nebraska National Bank	North Platte	NE
FCE Credit Union	Omaha	NE
Plattsmouth State Bank	Plattsmouth	NE
Jones National Bank and Trust Company	Seward	NE
Stromsburg Bank	Stromsburg	NE
First National Bank of Wahoo	Wahoo	NE
First National Bank & Trust Company of Ada	Ada	OK
Alva State Bank & Trust Company	Alva	OK
Community National Bank	Alva	OK
American National Bank	Ardmore	OK
First Bank and Trust, N.A	Bethany/Oklahoma City	OK
SpiritBank, N.A	Bristow	OK
Federal BankCentre	Broken Arrow	OK
Farmers and Merchants Bank	Crescent	OK
The Eastman National Bank of Newkirk	Newkirk	OK
Charter National Bank	Oklahoma City	OK
Oklahoma Employees Credit Union	Oklahoma City	OK
First National Bank and Trust Company	Okmulgee	OK
First State Bank	Picher	OK
McClain County National Bank	Purcell	OK
Tinker Federal Credit Union	Tinker AFB	OK
Oklahoma Central Credit Union	Tulsa	OK
Welch State Bank	Welch	OK
Farmers and Merchants Bank, N.A	Yukon/Oklahoma City	OK

Federal Home Loan Bank of San Francisco—District 11

Norwest Bank Arizona, N.A	Phoenix	AZ
Fifth Third Bank, F.S.B	Scottsdale	AZ
North County Bank	Escondido	CA
Humboldt Bank	Eureka	CA
Six Rivers National Bank	Eureka	CA
Cathay Bank	Los Angeles	CA
General Bank	Los Angeles	CA
F&A Federal Credit Union	Monterey Park	CA
Stanford Federal Credit Union	Palo Alto	CA
CBC Federal Credit Union	Port Hueneme	CA
Peninsula Bank of San Diego	San Diego	CA
Gateway Bank, F.S.B	San Francisco	CA
First Bank of San Luis Obispo	San Luis Obispo	CA
Chinatrust Bank (U.S.A.)	Torrance	CA
Visalia Community Bank	Visalia	CA

Federal Home Loan Bank of Seattle—District 12

City Bank	Honolulu	HI
Oahu Educational Employees Credit Union	Honolulu	HI
Citizens State Bank	Hamilton	MT
BankWest, N.A	Kalispell	MT
Valley Bank of Kalispell	Kalispell	MT

First National Bank of Montana	Libby	MT
First Technology Credit Union	Beaverton	OR
Bank of the Cascades	Bend	OR
Siuslaw Valley Bank	Florence	OR
PACE Credit Union	Portland	OR
South Umpqua State Bank	Roseburg	OR
Clackamas County Bank	Sandy	OR
Bank of Utah	Ogden	UT
Goldenwest Credit Union	Ogden	UT
Community First National Bank	Salt Lake City	UT
Industrial Credit Union of Whatcom County	Bellingham	WA
Cashmere Valley Bank	Cashmere	WA
Mt. Rainier National Bank	Enumclaw	WA
Grant National Bank	Ephrata	WA
Everett Mutual Bank	Everett	WA
NorthWest Telco Credit Union	Everett	WA
Rainier Pacific, a Community Credit Union	Fife	WA
NW Federal Credit Union	Seattle	WA
Seattle Telco Federal Credit Union	Seattle	WA
First Heritage Bank	Snohomish	WA
Horizon Credit Union	Spokane	WA
American National Bank	Cheyenne	WY
The Bank of Laramie	Laramie	WY
First Federal Savings Bank	Sheridan	WY

II. Public Comments

To encourage the submission of public comments on the community support performance of FHLBank members, on or before October 30, 1999, each FHLBank will notify its Advisory Council and nonprofit housing developers, community groups, and other interested parties in its district of the members selected for community support review in the 1998–99 seventh quarter review cycle. 12 CFR 936.2(b)(2)(ii). In reviewing a member for community support compliance, the Finance Board will consider any public comments it has received concerning the member. 12 CFR 936.2(d). To ensure consideration by the Finance Board, comments concerning the community support performance of members selected for the 1998–99 seventh quarter review cycle must be delivered to the Finance Board on or before the November 29, 1999 deadline for submission of Community Support Statements.

By the Federal Housing Finance Board.

Dated: October 8, 1999.

William W. Ginsberg,

Managing Director.

[FR Doc. 99–26881 Filed 10–14–99; 8:45 am]

BILLING CODE 6725–01–P

FEDERAL RESERVE SYSTEM

Formations of, Acquisitions by, and Mergers of Bank Holding Companies

The companies listed in this notice have applied to the Board for approval, pursuant to the Bank Holding Company Act of 1956 (12 U.S.C. 1841 *et seq.*) (BHC Act), Regulation Y (12 CFR Part 225), and all other applicable statutes and regulations to become a bank holding company and/or to acquire the assets or the ownership of, control of, or the power to vote shares of a bank or bank holding company and all of the banks and nonbanking companies owned by the bank holding company, including the companies listed below.

The applications listed below, as well as other related filings required by the Board, are available for immediate inspection at the Federal Reserve Bank indicated. The application also will be available for inspection at the offices of the Board of Governors. Interested persons may express their views in writing on the standards enumerated in the BHC Act (12 U.S.C. 1842(c)). If the proposal also involves the acquisition of a nonbanking company, the review also includes whether the acquisition of the nonbanking company complies with the standards in section 4 of the BHC Act (12 U.S.C. 1843). Unless otherwise noted, nonbanking activities will be conducted throughout the United States.

Unless otherwise noted, comments regarding each of these applications must be received at the Reserve Bank indicated or the offices of the Board of Governors not later than November 8, 1999.

A. Federal Reserve Bank of Chicago (Philip Jackson, Applications Officer) 230 South LaSalle Street, Chicago, Illinois 60690-1413:

1. Great River Banshares Corporation, Burlington, Iowa; to acquire 50.0025 percent of the voting shares of Henry County Bank (In Organization), Mt. Pleasant, Iowa.

B. Federal Reserve Bank of San Francisco (Maria Villanueva, Manager of Analytical Support, Consumer Regulation Group) 101 Market Street, San Francisco, California 94105-1579:

1. Heritage Commerce Corp., San Jose, California; to acquire 100 percent of the voting shares of Heritage Bank South Valley, Morgan Hill, California.

Board of Governors of the Federal Reserve System, October 8, 1999.

Robert deV. Frierson,

Associate Secretary of the Board.

[FR Doc. 99–26926 Filed 10–14–99; 8:45 am]

BILLING CODE 6210–01–F

FEDERAL RESERVE SYSTEM

Formations of, Acquisitions by, and Mergers of Bank Holding Companies

The companies listed in this notice have applied to the Board for approval, pursuant to the Bank Holding Company Act of 1956 (12 U.S.C. 1841 *et seq.*) (BHC Act), Regulation Y (12 CFR part 225), and all other applicable statutes and regulations to become a bank holding company and/or to acquire the assets or the ownership of, control of, or the power to vote shares of a bank or bank holding company and all of the banks and nonbanking companies owned by the bank holding company, including the companies listed below.

The applications listed below, as well as other related filings required by the Board, are available for immediate inspection at the Federal Reserve Bank indicated. The application also will be available for inspection at the offices of the Board of Governors. Interested persons may express their views in writing on the standards enumerated in the BHC Act (12 U.S.C. 1842(c)). If the proposal also involves the acquisition of a nonbanking company, the review also

includes whether the acquisition of the nonbanking company complies with the standards in section 4 of the BHC Act (12 U.S.C. 1843). Unless otherwise noted, nonbanking activities will be conducted throughout the United States.

Unless otherwise noted, comments regarding each of these applications must be received at the Reserve Bank indicated or the offices of the Board of Governors not later than November 12, 1999.

A. Federal Reserve Bank of New York (Betsy Buttrill White, Senior Vice President) 33 Liberty Street, New York, New York 10045-0001:

1. NBT Bancorp Inc., Norwich, New York; to acquire 100 percent of the voting shares of Lake Ariel Bancorp, Inc., Lake Ariel, Pennsylvania, and thereby indirectly acquire LA Bank, National Association, Lake Ariel, Pennsylvania.

Board of Governors of the Federal Reserve System, October 12, 1999.

Robert deV. Frierson,

Associate Secretary of the Board.

[FR Doc. 99–27005 Filed 10–14–99; 8:45 am]

BILLING CODE 6210–01–F

FEDERAL RESERVE SYSTEM

Notice of Proposals to Engage in Nonbanking Activities or to Acquire Companies that are Engaged in Nonbanking Activities

The companies listed in this notice have given notice under section 4 of the Bank Holding Company Act (12 U.S.C. 1843) (BHC Act) and Regulation Y (12 CFR Part 225) to engage *de novo*, or to acquire or control voting securities or assets of a company, that engages either directly or through a subsidiary or other company, in a nonbanking activity. These activities will be conducted worldwide.

Each notice is available for inspection at the Federal Reserve Bank indicated. The notice also will be available for inspection at the offices of the Board of Governors. Interested persons may express their views in writing on the question whether the proposal complies with the standards of section 4 of the BHC Act.

Unless otherwise noted, comments regarding the applications must be received at the Reserve Bank indicated or the offices of the Board of Governors not later than October 29, 1999.

A. Federal Reserve Bank of New York (Betsy Buttrill White, Senior Vice President) 33 Liberty Street, New York, New York 10045-0001:

1. National Westminster Bank Plc, London, England; to make an investment through its wholly owned subsidiary, NatWest Group Holdings Corporation, New York, New York, in Identrus, LLC, New York, New York (Company) (formerly known as Global Trust Organization LLC), and thereby engage *de novo* directly and through Company, in digital certification and data processing and data transmission activities, as described below. Notificant also proposes to engage in activities that it maintains are incidental to permissible digital certification and data processing and data transmission activities.

Notificant proposes to acquire more than 5 percent of the outstanding voting interests in Company, a *de novo* limited liability company.

Other investors in Company would include national banks and state member banks. Company would serve as the rulemaking authority for a network of participating financial institutions (Network), which would include Notificant, future equity investors in Company, and other financial institutions that elect to participate in the Network (collectively, Participants). The Network is designed to allow Participants to certify electronically the identity of parties conducting business or communicating electronically through the internet or otherwise. Participants in the Network would, among other things, issue to customers ''digital certificates'' that authenticate messages electronically sent by the customer, and confirm the validity of digital certificates issued by Participants. Participants also may issue warranties to customers who request verification of digital certificates issued by Participants, and post collateral to secure claims under any warranty issued by the Participant.

Company would develop, maintain, and enforce the rules governing the operation of, and participation in, the Network, and provide other services designed to facilitate the certification activities of Participants and operation of the Network. These activities would include issuing digital certificates to Participants and maintaining a current database of digital certificates that have been issued. Company and Participants would engage in a wide range of data processing and data transmission activities in connection with their proposed activities. A more complete description of the proposed activities of Company, Notificant, and other Participants is contained in the notices.

Section 4(c)(8) of the BHC Act provides that a bank holding company may, with Board approval, engage in any activity that the Board has determined (by order or regulation) to be so closely related to banking or managing or controlling banks as to be a proper incident thereto. The Board previously has determined that certain data processing and data transmission services are closely related to banking for purposes of section 4(c)(8) of the BHC Act, pursuant to § 225.28(b)(14) of Regulation Y. Notificant contends that all of the proposed activities are so closely related to banking as to be a proper incident thereto, or are activities that are incidental to permissible activities, pursuant to § 225.21(a)(2) of Regulation Y.

In determining whether the proposal satisfies the proper incident to banking standard of section 4(c)(8) of the BHC Act, the Board must consider whether consummation of the proposal can ''reasonably be expected to produce benefits to the public, such as greater convenience, increased competition, or gains in efficiency, that outweigh possible adverse effects, such as undue concentration of resources, decreased or unfair competition, conflicts of interests, or unsound banking practices.'' 12 U.S.C. 1843(c)(8). Notificant contends that consummation of the proposal will facilitate the development of electronic commerce and will have a beneficial effect on competition for identity certification and related services.

In publishing the proposal for comment, the Board does not take a position on the issues raised by the proposal. Notice of the proposal is published solely to seek the views of interested persons on the issues presented by the proposal and does not represent a determination by the Board that the proposal meets, or is likely to meet, the standards of the BHC Act. The notice is available for immediate inspection at the Federal Reserve Bank indicated above and at the offices of the Board of Governors. Any request for a hearing on the notices must be accompanied by a statement of reasons explaining why a written presentation would not suffice in lieu of a hearing, identifying specifically any questions of fact that are in dispute, summarizing the evidence that would be presented at a hearing, and indicating how the party commenting would be aggrieved by approval of the proposal.

2. UBS AG, Zurich, Switzerland (''Notificant''); to acquire certain subsidiaries of Global Asset Management Limited, Hamilton, Bermuda (''GAML''), including Global Asset Management (USA) Inc., GAM Investments Inc., GAM Services Inc., and GAM Funding Inc., all in New York, New York, and GAM International Management Limited, London, England,

and thereby engage in certain nonbanking activities, including extending credit and servicing loans, pursuant to § 225.28(b)(1) of Regulation Y; acting as investment advisor to any person, pursuant to § 225.28(b)(6) of Regulation Y; agency transactional services, pursuant to § 225.28(b)(7) of Regulation Y; providing certain administrative services to mutual funds, *see Bankers Trust New York Corp.*, 83 Fed. Res. Bull. 780 (1997); and serving as the investment advisor and commodity pool operator to trusts, limited partnerships, and mutual funds, and serving as the general partner of limited partnerships that invest only in securities and other instruments which Notificant would be permitted to hold directly under the Bank Holding Company Act, *see Travelers Group Inc./ Citigroup*, 84 Fed. Res. Bull. 985 (1998); *UBS AG*, 84 Fed. Res. Bull. 684 (1998). Comments regarding this application must be received by November 10, 1999.

Board of Governors of the Federal Reserve System, October 8, 1999.

Robert deV. Frierson,

Associate Secretary of the Board.

[FR Doc. 99–26927 Filed 10–14–99; 8:45 am]

BILLING CODE 6210–01–F

FEDERAL RESERVE SYSTEM

Notice of Proposals To Engage in Permissible Nonbanking Activities or To Acquire Companies That Are Engaged in Permissible Nonbanking Activities

The companies listed in this notice have given notice under section 4 of the Bank Holding Company Act (12 U.S.C. 1843) (BHC Act) and Regulation Y (12 CFR part 225), to engage *de novo*, or to acquire or control voting securities or assets of a company, including the companies listed below, that engages either directly or through a subsidiary or other company, in a nonbanking activity that is listed in § 225.28 of Regulation Y (12 CFR 225.28) or that the Board has determined by Order to be closely related to banking and permissible for bank holding companies. Unless otherwise noted, these activities will be conducted throughout the United States.

Each notice is available for inspection at the Federal Reserve Bank indicated. The notice also will be available for inspection at the offices of the Board of Governors. Interested persons may express their views in writing on the question whether the proposal complies with the standards of section 4 of the BHC Act.

Unless otherwise noted, comments regarding the applications must be received at the Reserve Bank indicated or the offices of the Board of Governors not later than November 12, 1999.

A. Federal Reserve Bank of Cleveland (Paul Kaboth, Banking Supervisor) 1455 East Sixth Street, Cleveland, Ohio 44101-2566:

1. Provident Financial Group, Inc., Cincinnati, Ohio; to acquire Fidelity Financial of Ohio, Inc., Cincinnati, Ohio, and thereby indirectly acquire Centennial Bank, Cincinnati, Ohio, and thereby engage in permissible savings and loan activities, pursuant to § 225.28(b)(4)(ii) of Regualtion Y.

Board of Governors of the Federal Reserve System, October 12, 1999.

Robert deV. Frierson,

Associate Secretary of the Board.

[FR Doc. 99–27006 Filed 10–14–99; 8:45 am]

BILLING CODE 6210–01–

FEDERAL TRADE COMMISSION

Agency Information Collection Activities; Proposed Collection; Comment Request; Extension

AGENCY: Federal Trade Commission.

ACTION: Notice.

SUMMARY: The Federal Trade Commission (FTC) is soliciting public comments on proposed extensions of Paperwork Reduction Act (PRA) clearance for information collection requirements associated with four current rules enforced by the Commission. These clearances expire on December 31, 1999. The FTC has submitted the proposed information collection requirements described below to the Office of Management and Budget (OMB) and has requested that OMB extend the paperwork clearances through December 31, 2002.

DATES: Comments must be filed by December 14, 1999.

ADDRESSES: Send written comments to Carole Reynolds, Attorney, Division of Financial Practices, Bureau of Consumer Protection, Federal Trade Commission, Washington, DC 20580, 202–326–3230. All comments should be identified as responding to this notice.

FOR FURTHER INFORMATION CONTACT: Requests for additional information or copies of the proposed information requirements should be addressed to Carole Reynolds at the address listed above.

SUPPLEMENTARY INFORMATION: Under the Paperwork Reduction Act of 1995 (PRA) (44 U.S.C. 3501–3520), Federal agencies must obtain approval from OMB for each collection of information they conduct or sponsor. ''Collection of information'' means agency requests or requirements that members of the public submit reports, keep records, or provide information to a third party. 44 U.S.C. 3502(3), 5 CFR 1320.3(c). As required by section 3506(c)(2)(A) of the PRA, the FTC is providing this opportunity for public comment before requesting that OMB extend the existing paperwork clearance for the regulations noted herein.

The FTC invites comments on: (1) whether the proposed collection of information is necessary for the proper performance of the functions of the agency, including whether the information will have practical utility; (2) the accuracy of the agency's estimate of the burden of the proposed collection of information, including the validity of the methodology and assumptions used; (3) ways to enhance the quality, utility, and clarity of the information to be collected; and (4) ways to minimize the burden of the collection of information on those who are to respond, including through the use of appropriate automated, electronic, mechanical, or other technological collection techniques or other forms of information technology, *e.g.*, permitting electronic submission of responses.

The four rules covered by this notice are: (1) Regulations promulgated under The Equal Credit Opportunity Act, 15 U.S.C. 1691 *et seq.* (''ECOA'') (''Regulation B'') (Control Number: 3084–0087); (2) Regulations promulgated under The Electronic Fund Transfer Act, 15 U.S.C. 1693 *et seq.* (''EFTA'') (''Regulation E'') (Control Number: 3084–0085); (3) Regulations promulgated under The Consumer Leasing Act, 15 U.S.C. 1667 *et seq.*, (''CLA'') (''Regulation M'') (Control Number: 3084–0086);

(4) Regulations promulgated under The Truth-In-Lending Act, 15 U.S.C. 1601 *et seq.* (''TILA'') (''Regulation Z'') (Control Number: 3084–0088).

Each of these four rules impose certain PRA recordkeeping and disclosure requirements associated with providing credit or with other financial transactions. All of these rules require covered entities to keep certain records. Staff believes that these entities would likely retain these records in the normal course of business even absent the recordkeeping requirement in the rules.[1] There is, however, some burden associated with ensuring that covered entities do not prematurely dispose of

[1] PRA ''burden'' does not include effort expended in the ordinary course of business, regardless of any regulatory requirement. 5 CFR 1320.3(b)(2).

relevant records during the period of time required by the applicable rule.

Disclosure requirements involve both set-up and monitoring costs as well as certain transaction-specific costs. ''Set-up'' burden, incurred by new entrants only, includes identifying the applicable disclosure requirements, determining compliance obligations, and designing and developing compliance systems and procedures. ''Monitoring'' burden, incurred by all covered entities, includes reviewing revisions to regulatory requirements, revising compliance systems and procedures as necessary, and monitoring the ongoing operation of systems and procedures to ensure continued compliance. ''Transaction-related'' burden refers to the effort associated with providing the various required disclosures in individual transactions. While this burden varies with the number of transactions, the figures shown for transaction-related burden in the tables that follow are estimated averages. The actual range of compliance burden experienced by covered entities, and reflected in those averages, varies widely. Depending on the extent to which covered entities have developed automated systems and procedures for providing the required disclosures, and the efficacy of those systems and procedures, some entities may have little or no such burden, while others incur a higher burden.[2]

Calculating the burden associated with the four regulations' disclosure requirements is extremely difficult because of the highly diverse group of affected entities. The ''respondents'' included in the following burden calculations consist of all types of creditors (e.g., finance companies, mortgage companies, retailers, Internet businesses), financial institutions (including new electronic commerce entities), service providers, certain government agencies and others involved in delivering electronic fund transfers of government benefits, and lessors (e.g., auto dealers, independent leasing companies, manufacturers' captive finance companies, furniture companies, computer dealers). The burden estimates represent staff's best assessment, based on its knowledge and expertise relating to the financial services industry. To derive these estimates, staff considered the wide variations in covered entities': (1) size and location; (2) credit or lease products offered, extended, or advertised, and their particular terms; (3) types of EFTs used; (4) types and occurrences of adverse actions; (5) types of appraisal reports utilized; and (6) automation with regard to their compliance operations.

The estimated PRA burden associated with these rules, attributable to the Commission, is less today than in the past. Staff believes that fewer entities are subject to the Commission's jurisdiction today. In addition, as automation becomes more pervasive in the financial services industry, entities may be able to comply more efficiently.

The cost estimates shown below relate solely to labor costs. The applicable PRA requirements impose minimal capital or other non-labor costs, as affected entities generally have the necessary equipment for other business purposes. Similarly, staff estimates that compliance with these rules entails minimal printing and copying costs beyond that associated with documenting financial transactions in the ordinary course of business. The burden estimates shown below include the time necessary to train staff in compliance with the regulations.

The following paragraphs discuss each of these rules, their particular PRA requirements, and staff's best estimates of the related hour and cost burdens.

1. Regulation B

The ECOA prohibits discrimination in the extension of credit. Regulation B, 12 CFR 202, promulgated by the Board of Governors of the Federal Reserve System, establishes both recordkeeping and disclosure requirements to assist consumers in understanding their rights under the ECOA and to assist in detecting unlawful discrimination. The FTC enforces the ECOA as to all creditors except those that are subject to the regulatory authority of another federal agency (such federally chartered or insured depository institutions).

Estimated annual hours burden: 2,560,000 hours, rounded (1,150,000 recordkeeping hours + 1,409,499 disclosure hours).

Recordkeeping: FTC staff estimates that Regulation B's general recordkeeping requirements affect 1,000,000 credit firms subject to the Commission's jurisdiction, at an average annual burden of one hour per firm for a total of 1,000,000 hours. Staff also estimates that the requirement that creditors monitor information about race/national origin, sex, age, and marital status imposes a maximum burden of one minute each[3] for approximately nine million credit applications (based on recent industry data regarding the approximate number of mortgage purchase and refinance originations), for a total of 150,00 hours. The total estimated recordkeeping burden is 1,150,000 hours.

Disclosure: Regulation B requires that creditors (*i.e.*, entities that regularly participate in the decision whether or not to extend credit and take ''adverse action'' under Regulation B) provide notices whenever they take adverse action. The regulation also requires entities that extend various types of mortgage credit to provide a copy of the appraisal report and to notify applicants of their right to a copy of the report.

As noted above, Regulation B applies to a highly diverse group of entities, including retailers, mortgage lenders, mortgage brokers, finance companies, Internet businesses, and others. In some instances, where covered entities may make certain required disclosures in the ordinary course of business, the Regulation imposes no burden. In addition, some entities have developed highly automated means of providing the required disclosures, while others rely on methods requiring more manual effort. Thus, the following burden estimates are averages based on staff's best estimate of the burden incurred over an extremely broad spectrum of covered entities.

Disclosure	Setup/monitoring[1]			Transaction-related[2]			
	Respondents	Average burden per respondent (hours)	Total setup/monitoring burden (hours)	Number of transactions	Average burden per transaction (minutes)	Total transaction burden (hours)	Total burden (hours)
Adverse action notices	1,000,000	.5	500,000	200,000,000	.25	833,333	1,333,333
Appraisal notices	22,000	.5	11,000	6,500.000	.25	27,083	38,083

[2] For example, large retailers may use automated means to provide required disclosures, such as issuing, en masse, notices of changes in terms. Smaller retailers and certain types of creditors may have less automated compliance systems, and thus may issue disclosures on an individual transaction basis, resulting in higher burden.

[3] Regulation B contains a model form that creditors may use to gather and retain the required information.

Disclosure	Setup/monitoring [1]			Transaction-related [2]			
	Respondents	Average burden per respondent (hours)	Total setup/monitoring burden (hours)	Number of transactions	Average burden per transaction (minutes)	Total transaction burden (hours)	Total burden (hours)
Appraisal reports	22,000	.5	11,000	6,500.000	.25	27,083	38,083
Total							1,409,409

[1] With respect to appraisal notices and appraisal reports, the above figures assume that approximately half of applicable mortgage entities (.5 × 44,000, or 22,000 businesses) would not otherwise provide this information and thus would be affected.
[2] The above figures assume that half of applicable mortgage transactions (.5 × 13,000,000, or 6,500,000) would not otherwise provide the appraisal notices and reports and thus would be affected.

Estimated annual cost burden: $46,418,000, rounded.

Staff calculated labor costs by applying appropriate hourly cost figures to the burden hours described above. The hourly rates used below ($50 for managerial or professional time, $20 for skilled technical time, and $10 for clerical time) are averages.

Recordkeeping: Staff estimates that the general recordkeeping responsibility of one hour per creditor would involve approximately 90 percent clerical time and ten percent skilled technical time. Keeping records of race/national origin, sex, age, and marital status requires an estimated one minute of skilled technical time. As shown below, the total recordkeeping cost is $14,666,666.

Disclosure: For each notice or information item listed, staff estimates that the burden hours consist of 10 percent managerial time and 90 percent skilled technical time. As shown below, the total disclosure cost is $32,418,477.

Required task	Managerial		Skilled technical		Clerical		Total cost ($)
	Time (hours)	Cost ($50/hr.)	Time (hours)	Cost ($20/hr.)	Time (hours)	Cost (10/hr.)	
General Recordkeeping	0	$0	100,000	$2,000,000	900,000	$9,000,000	$11,000,000
Other Recordkeeping	0	0	150,000	3,000,000	0	0	3,000,000
Total Recordkeeping							14,666,666
Adverse action notices	133,333	6,666,665	1,200,000	23,999,994	0	0	30,666,659
Appraisal notices	3,808	190,415	32,275	685,494	0	0	875,909
Appraisal reports	3,808	190,415	32,275	685,494	0	0	875,909
Total Disclosure							32,418,477
Total Recordkeeping and Disclosure							46,418,477

2. Regulation E

The EFTA requires accurate disclosure of the costs, terms, and rights relating to electronic fund transfer (EFT) services to consumers. Regulation E, promulgated by the Board of Governors of the Federal Reserve System, establishes both recordkeeping and disclosure requirements applicable to entities providing EFT services to consumers. The FTC enforces the EFTA as to all entities providing EFT services except those that are subject to the regulatory authority of another federal agency (such as federally chartered or insured depository institutions).

Estimated annual hours burden: 3,579,000 hours (500,000 recordkeeping hours + approximately 3,079,000 disclosure hours).

Recordkeeping: Staff estimates that Regulation E's recordkeeping requirements affect 500,000 firms offering EFT services to consumers and subject to the Commission's jurisdiction, at an average annual burden of one hour per firm, for a total of 500,000 hours.

Disclosure: As noted above, Regulation E applies to a highly diverse group of entities, including financial institutions (including certain retailers and electronic commerce entities), service providers, various federal and state agencies offering electronic fund transfers (EFTs), and others. In some instances, where covered entities may make certain required disclosures in the ordinary course of business, the Regulation imposes no burden. In addition, some entities have developed highly automated means of providing the required disclosures, while others rely on methods requiring more manual effort. Thus, the following burden estimates are averages based on the staff's best estimate of the burden incurred over an extremely broad spectrum of covered entities.

Disclosure	Setup/monitoring			Transaction-related			
	Respondents	Average burden per respondent (hours)	Total setup/monitoring burden (hours)	Number of transactions	Average burden per transaction (minutes)	Total transaction burden (hours)	Total burden (hours)
Initial terms	100,000	.5	50,000	1,000,000	.02	333	50,333
Change in terms	25,000	.5	12,500	33,000,000	.02	11,000	23,500

Disclosure	Setup/monitoring			Transaction-related			
	Respondents	Average burden per respondent (hours)	Total setup/monitoring burden (hours)	Number of transactions	Average burden per transaction (minutes)	Total transaction burden (hours)	Total burden (hours)
Periodic statements	100,000	.5	50,000	1,200,000,000	.02	400,000	450,000
Error resolution	100,000	.5	50,000	1,000,000	5	83,333	133,333
Transaction receipts	100,000	.5	50,000	5,000,000,000	.02	1,666,667	1,716,667
Preauthorized transfers	500,000	.5	250,000	1,000,000	.25	4167	254,167
Service provider notices	100,000	.25	25,000	1,000,000	.25	4167	29,167
Govt. benefit notices	10,000	.5	5,000	100,000,000	.25	416,667	421,667
Total							3,078,834

Estiamted annual cost burden: $76,313,000, rounded.

Staff calculated labor costs by applying appropriate hourly cost figures to the burden hours described above. The hourly rates used below ($50 for managerial or professional time, $20 for skilled technical time, and $10 for clerical time) are averages.

Recordkeeping: For the 500,000 recordkeeping hours, staff estimates that 10 percent of the burden hours require skilled technical time and 90 percent require clerical time. As shown below, the total recordkeeping cost is $5,500,000.

Disclosure: For each notice or information item listed, staff estimates that 10 percent of the burden hours require managerial time and 90 percent require skilled technical time. As shown below, the total disclosure cost is $70,813,182.

Required task	Managerial		Skilled technical		Clerical		Total cost ($)
	Time (hours)	Cost ($50/hr.)	Time (hours)	Cost ($20/hr.)	Time (hours)	Cost ($10/hr.)	
Recordkeeping	0	$0	50,000	$1,000,000	450,000	$4,500,000	$5,500,000
Disclosure:							
Initial terms	5,033	251,665	45,300	905,994	0	0	1,157,659
Change in terms	2,350	117,500	21,150	423,000	0	0	540,500
Periodic statements	45,000	2,250,000	405,000	8,100,000	0	0	10,350,000
Error resolution	13,333	666,665	120,000	2,399,994	0	0	3,066,659
Transaction receipts	171,667	8,583,335	1,540,000	30,900,006	0	0	39,483,34
Preauthorized transfers	25,417	1,270,835	228,750	4,575,006	0	0	5,845,84
Service provider notices	2,917	145,835	26,250	525,006	0	0	670,84
Govt. benefit notices	42,167	2,108,335	379,500	7,590,006	0	0	9,698,34
Total Disclosure							70,813,182
Total Recordkeeping and Disclosures							76,313,182

3. Regulation M

The CLA requries accurate disclosure of the costs and terms of leases to consumers. Regulation M, promulgated by the Board of Governors of the Federal reserve System, establishes disclosure requirements that assist consumers in understanding the terms of leases and recordkeeping requirements that assist enforcement of the CLA. The FTC enforces the CLA as to all lessors and advertisers except those that are subject to the regulatory authority of another federal agency (such as federally chartered or insured depository institutions).

Estimated annual hours burden: 387,500 hours, rounded (200,000 recordkeeping hours + 187,501 disclosures hours).

Recordkeeping: Staff estimates that Regulation M's recordkeeping requirements affect 200,000 firms leasing products to consumers and subject to the Commission's jurisdiction, at an average annual burden of one hour per firm, for a total of 200,000 hours.

Disclosure: As noted above, Regulation M applies to a highly diverse group of entities, including automobile lessors (such as auto dealers, independent leasing companies, and manufacturers' captive finance companies), computer lessors (such as computer dealers and other retailers), furniture lessors, various electronic commerce lessors, and diverse types of lease advertisers, and others. In some instances, where covered entities may make certain required disclosures in the ordinary course of business, the Regulation imposes no burden. In addition, some entities have developed highly automated means of providing the required disclosures, while others rely on methods requiring more manual effort. Thus, the following burden estimates are averages based on staff's best estimate of the burden incurred over an extremely broad spectrum of covered entities.

Disclosure	Setup/monitoring			Transaction related			Total burden (hours)
	Respondents	Average burden per respondent (hours)	Total setup/monitoring burden (hours)	Number of transactions	Average burden per transaction (minutes)	Total transaction burden (hours)	
Auto Leases [1]	100,00	.75	75,000	5,000,000	50	41,667	116,667
Other Leases [2]	100,000	.50	50,000	1,000,000	25	4,167	54,167
Advertising	25,000	.50	12,500	1,000,000	.25	4,167	16,667
Total							187,501

[1] This category focuses on consumer vehicle leases. the number of such leases—the largest category of consumer leases—has increased considerably in recent years. Vehicle leases are subject to additional lease disclosure requirements (pertaining to computation of payment obligations) than other lease transactions. Only consumers leases for more than four months are covered. See 15 U.S.C. 1667(1); 12 CFR 213.2(a)(6).

[2] This category focuses on all types of consumer leases other than vehicle leases. It includes leases for computers, other electronics, small appliances, furniture, and other transactions. Only consumers leases for more than four months are covered. See 15 U.S.C. 1667(1); 12 CFR 213.2(a)(6).

Estimated annual burden: $6,513,000, rounded.

Staff calculated labor costs by applying appropriate hourly cost figures to the burden hours described above. The hourly rates used below ($50 for managerial or professional time, $20 for skilled technical time, and $10 for clerical time) are averages.

Recordkeeping: For the 200,000 recordkeeping hours, staff estimates that 10 percent of the burden hours require skilled technical time and 90 percent require clerical time. As shown below, the total recordkeeping cost is $2,200,000.

Disclosure: For each notice or information item listed, staff estimates that 10 percent of the burden hours require managerial time and 90 percent require skilled technical time. As shown below, the total disclosure cost is $4,312,523.

Required task	Managerial		Skilled technical		Clerical		Total cost ($)
	Time (hours)	Cost ($50/hr.)	Time (hours)	Cost ($20/hr.)	Time (hours)	Cost ($10/hr.)	
Recordkeeping	0	$0	20,000	$400,000	180,000	$1,800,000	$2,200,000
Disclosures:							
Auto Leases	11,667	583,335	105,000	2,100,006	0	0	2,683,341
Other Leases	5,417	270,835	48,750	975,006	0	0	1,245,841
Advertising	1,667	83,335	15,000	300,000	0	0	383,341
Total Disclosures							4,312,523
Total Recordkeeping and Disclosures							6,512,523

4. Regulation Z

The TILA was enacted to foster comparison credit shopping and informed credit decision making by requiring accurate disclosure of the costs and terms of credit to consumers. Regulation Z, promulgated by the Board of Governors of the Federal Reserve System, establishes both recordkeeping and disclosure requirements to assist consumers and the enforcement of the TILA. The FTC enforces the TILA as to all creditors except those that are subject to the regulatory authority of another federal agency (such as federally chartered or insured depository institutions).

Estimated annual hours burden. 46,412,000 hours (1,000,000 recordkeeping hours + 45,412,000 disclosure hours).

Recordkeeping: FTC staff estimates that Regulation Z's recordkeeping requirements affect approximately 1,000,000 firms offering credit and subject to the Commission's jurisdiction, at an average annual burden of one hour per firm, for a total of 1,000,000 hours.

Disclosure: Regulation Z disclosure requirements pertain to open-end and closed-end credit. As noted above, the Regulation applies to a highly diverse group of entities, including retailers (such as department stores, appliance stores, discount retailers, medical-dental service providers, home improvement sellers, and newly-emerging electronic commerce retail operators); mortgage companies; finance companies; credit advertisers; auto dealerships; student loan companies; home fuel or power services (for furnaces, stoves, microwaves, and other heating, cooling or residential power equipment); credit advertisers; and others. In some instances, where covered entities may make certain required disclosures in the ordinary course of business, the Regulation imposes no burden. In addition, some entities have developed highly automated means of providing the required disclosures, while others rely on methods requiring more manual effort. Thus, the following burden estimates are averages based on staff's best estimate of the burden incurred over an extremely broad spectrum of covered entities.

Disclosure	Setup/monitoring			Transaction-related			Total burden (hours)
	Respondents	Average burden per respondent (hours)	Total setup/monitoring burden (hours)	Number of transactions	Average burden per transaction (minutes)	Total transaction burden (hours)	
Open-end credit:							
Initial terms	100,000	.5	50,000	50,000,000	.25	208,333	258,333
Rescission notices	50,000	.5	25,000	100,000	.25	417	25,417
Change in terms	25,000	.5	12,500	136,000,000	.125	283,333	295,833
Periodic statements	200,000	.5	100,000	4,800,000,000	.0625	5,000,000	5,100,000
Error resolution	100,000	.5	50,000	10,000,000	5	833,333	883,333
Credit and charge card accounts	100,000	1	100,000	50,000,000	.25	208,333	308,333
Home equity lines of credit	100,000	1	100,000	5,000,000	.25	20,833	120,833
Advertising	250,000	.25	62,500	700,000	.5	5,833	68,333
Closed-end credit:							
Credit disclosures	800,000	.50	400,000	330,000,000	2	11,000,000	11,400,000
Rescission notices	200,000	.50	100,000	34,000,000	1	566,667	666,667
Variable rate mortgages	100,000	.50	50,000	1,800,000	2	60,000	110,000
High rate/high fee mortgages	100,000	.50	50,000	500,000	2	16,667	66,667
Reverse mortgages	50,000	.50	25,000	150,000	1	2,500	27,500
Advertising	500,000	.25	125,000	1,000,000	1	16,667	141,667
Total open-end credit							7,060,415
Total closed-end credit							12,412,501
Total credit							19,472,916

Estimated annual cost burden: $458,877,000, rounded.

Staff calculated labor costs by applying appropriate hourly cost figures to the burden hours described above. The hourly rates used below ($50 for managerial or professional time, $20 for skilled technical time, and $10 for clerical time) are averages.

Recordkeeping: For the 1,000,000 recordkeeping hours, staff estimates that 10 percent of the burden hours require skilled technical time and 90 percent require clerical time. As shown below, the total recordkeeping cost is $11,000,000.

Disclosure: For each notice or information item listed, staff estimates that 10 percent of the burden hours require managerial time and 90 percent require skilled technical time. As shown below, the total disclosure cost is $447,877,068.

Required task	Managerial		Skilled Technical		Clerical		Total Cost ($)
	Time (hours)	Cost ($50/hr.)	Time (hours)	Cost ($20/hr.)	Time (hours)	Cost ($10/hr.)	
Recordkeeping	0	$0	100,000	$2,000,000	900,000	$9,000,000	$11,000,000
Open-end credit Disclosures:							
Initial terms	25,833	1,291,665	232,500	4,649,994	0	0	5,941,659
Rescission notices	2,542	127,085	22,875	457,506	0	0	584,591
Change in terms	29,583	1,479,165	266,250	5,324,994	0	0	6,804,159
Periodic statements	510,000	25,500,000	4,590,000	91,800,000	0	0	117,300,000
Error resolution	88,333	4,416,665	795,000	15,899,994	0	0	20,316,659
Credit and charge card accounts	30,833	1,541,665	277,500	5,549,994	0	0	7,091,659
Home equity lines of credit	12,083	604,165	108,750	2,174,994	0	0	2,779,159
Advertising	6,833	341,665	61,500	1,229,994	0	0	1,571,659
Total open-end credit							162,389,545
Closed-end credit Disclosures:							
Credit disclosures	1,140,000	57,000,000	10,260,000	205,200,000	0	0	262,200,000
Rescission notices	66,667	3,333,335	600,000	12,000,006	0	0	15,333,341
Variable rate mortgages	11,000	550,000	99,000	1,980,000	0	0	2,530,000
High rate/high fee mortgages	6,667	333,335	60,000	1,200,006	0	0	1,533,341
Reverse mortgages	2,750	137,500	24,750	495,000	0	0	632,500
Advertising	14,167	708,335	127,500	2,550,006	0	0	3,258,341
Total open-end credit							258,487,523
Total Disclosures							447,877,068
Total Recordkeeping and Disclosures:							458,877,068

Debra A. Valentine,
General Counsel.
[FR Doc. 99–27007 Filed 10–14–99; 8:45 am]
BILLING CODE 6750–01–M

DEPARTMENT OF HEALTH AND HUMAN SERVICES

Agency for Toxic Substances and Disease Registry

[ATSDR–152]

Availability of Draft Toxicological Profiles

AGENCY: Agency for Toxic Substances and Disease Registry (ATSDR), Department of Health and Human Services (HHS).

ACTION: Notice of availability.

SUMMARY: The Comprehensive Environmental Response, Compensation, and Liability Act of 1980 (CERCLA), as amended by the Superfund Amendments and Reauthorization Act of 1986 (SARA), section 104(i)(3) [42 U.S.C. 9604(i)(3)] directs the Administrator of ATSDR to prepare toxicological profiles of priority hazardous substances and to revise and publish each updated toxicological profile as necessary. This notice announces the availability of the 13th set of toxicological profiles, which consists of six updated drafts, prepared by ATSDR for review and comment.

DATES: In order to be considered, comments on these draft toxicological profiles must be received on or before February 22, 2000. Comments received after the close of the public comment period will be considered at the discretion of ATSDR based upon what is deemed to be in the best interest of the general public.

ADDRESSES: Requests for copies of the draft toxicological profiles should be sent to the attention of Ms. Loretta Norman, Division of Toxicology, Agency for Toxic Substances and Disease Registry, Mailstop E–29, 1600 Clifton Road, NE., Atlanta, Georgia 30333. Comments regarding the draft toxicological profiles should be sent to the attention of Dr. Ganga Choudhary, Division of Toxicology, Agency for Toxic Substances and Disease Registry, Mailstop E–29, 1600 Clifton Road, NE., Atlanta, Georgia 30333.

Requests for the draft toxicological profiles must be in writing, and must specifically identify the hazardous substance(s) profile(s) that you wish to receive. ATSDR reserves the right to provide only one copy of each profile requested, free of charge. In case of extended distribution delays, requestors will be notified.

Written comments and other data submitted in response to this notice and the draft toxicological profiles should bear the docket control number ATSDR–152. Send one copy of all comments and three copies of all supporting documents to Dr. Ganga Choudhary at the above stated address by the end of the comment period. Because all public comments regarding ATSDR toxicological profiles are available for public inspection, no confidential business or other confidential information should be submitted in response to this notice.

FOR FURTHER INFORMATION CONTACT: Ms. Loretta Norman, Division of Toxicology, Agency for Toxic Substances and Disease Registry, Mailstop E–29, 1600 Clifton Road, NE., Atlanta, Georgia 30333, telephone (404) 639–6322.

SUPPLEMENTARY INFORMATION: The Superfund Amendments and Reauthorization Act (SARA) (Pub. L. 99–499) amends the Comprehensive Environmental Response, Compensation, and Liability Act (CERCLA or Superfund) (42 U.S.C. 9601 *et seq.*) by establishing certain responsibilities for the ATSDR and the Environmental Protection Agency (EPA) with regard to hazardous substances which are most commonly found at facilities on the CERCLA National Priorities List (NPL). Among these responsibilities is that the Administrator of ATSDR prepare toxicological profiles for substances included on the priority lists of hazardous substances. These lists identified 275 hazardous substances that ATSDR and EPA determined pose the most significant potential threat to human health. The availability of the revised priority list of 275 hazardous substances was announced in the **Federal Register** on November 17, 1997 (62 FR 61332). For prior versions of the list of substances see **Federal Register** notices dated April 17, 1987 (52 FR 12866); October 20, 1988 (53 FR 41280); October 26, 1989 (54 FR 43619); October 17, 1990 (55 FR 42067); October 17, 1991 (56 FR 52166); October 28, 1992 (57 FR 48801); February 28, 1994 (59 FR 9486); and April 29, 1996 (61 FR 18744). (CERCLA also requires ATSDR to assure the initiation of a research program to fill data needs associated with the substances.)

Section 104(i)(3) of CERCLA (42 U.S.C. 9604(i)(3)) outlines the content of these profiles. Each profile will include an examination, summary and interpretation of available toxicological information and epidemiologic evaluations. This information and these data are to be used to identify the levels of significant human exposure for the substance and the associated health effects. The profiles must also include a determination of whether adequate information on the health effects of each substance is available or in the process of development. When adequate information is not available, ATSDR, in cooperation with the National Toxicology Program (NTP), is required to assure the initiation of research to determine these health effects.

Although key studies for each of the substances were considered during the profile development process, this **Federal Register** notice seeks to solicit any additional studies, particularly unpublished data and ongoing studies, which will be evaluated for possible addition to the profiles now or in the future.

The following draft toxicological profiles will be made available to the public on or about October 17, 1999.

Document	Hazardous substance	CAS No.
1	ASBESTOS	001332–21–4
	AMOSITE ASBESTOS	012172–73–5
	CHRYSOTILE ASBESTOS	012001–29–5
2	BENZIDINE	000092–87–5
3	1,2-DICHLOROETHANE	000107–06–2
4	DI-N-BUTYL PHTHALATE	000084–74–2
5	METHYL PARATHION	000298–00–0
6	PENTACHLOROPHENOL	000087–86–5

All profiles issued as ''Drafts for Public Comment'' represent ATSDR's best efforts to provide important toxicological information on priority hazardous substances. We are seeking public comments and additional information which may be used to supplement these profiles. ATSDR remains committed to providing a public comment period for these documents as a means to best serve public health and our clients.

Dated: October 8, 1999.

Georgi Jones,

Director, Office of Policy and External Affairs, Agency for Toxic Substances and Disease Registry.

[FR Doc. 99–27025 Filed 10–14–99; 8:45 am]

BILLING CODE 4163–70–P

DEPARTMENT OF HEALTH AND HUMAN SERVICES

Food and Drug Administration

[Docket No. 99N–2674]

Jay Marcus; Proposal to Debar; Opportunity for a Hearing

AGENCY: Food and Drug Administration, HHS.

ACTION: Notice.

SUMMARY: The Food and Drug Administration (FDA) is proposing to issue an order under the Federal Food, Drug, and Cosmetic Act (the act) permanently debarring Mr. Jay Marcus from providing services in any capacity to a person that has an approved or pending drug product application. FDA bases this proposal on a finding that Mr. Marcus was convicted of a felony under Federal law for conspiracy to defraud the United States. This notice also offers Mr. Marcus an opportunity for a hearing on the proposal. The agency is issuing this notice in the **Federal Register** because all other appropriate means of service of the notice upon Mr. Marcus have proven ineffective.

DATES: Submit written requests for a hearing by November 15, 1999.

ADDRESSES: Submit written requests for a hearing and supporting information to the Dockets Management Branch (HFA–305), Food and Drug Administration, 5630 Fishers Lane, rm. 1061 Rockville, MD 20852.

FOR FURTHER INFORMATION CONTACT: Christine F. Rogers, Center for Drug Evaluation and Research (HFD–7), Food and Drug Administration, 5600 Fishers Lane, Rockville, MD 20857, 301–594–2041.

SUPPLEMENTARY INFORMATION:

I. Conduct Related to Conviction

On October 21, 1994, the United States District Court for the District of Maryland accepted Mr. Marcus' plea of guilty to one count of conspiracy to defraud the United States under 18 U.S.C. 371 and sentenced Mr. Marcus for the crime. The underlying facts supporting this felony conviction, and to which Mr. Marcus stipulated to in his plea agreement, are as follows:

Mr. Marcus was the president and chief executive officer of Halsey Drug Co., Inc. (Halsey), a generic drug manufacturer with facilities located in Brooklyn, NY. Halsey had obtained approval to market certain generic drug products. Master formulas approved in the abbreviated new drug applications (ANDA's) for those products specified the ingredients and manufacturing processes to be used. FDA regulations required Halsey to maintain accurate and contemporaneous written batch records documenting the raw materials used and the manufacturing processes followed for each batch of such generic drug products.

With Mr. Marcus' knowledge and sometimes at his direction or with his approval, Halsey employees responded to problems in the production of Halsey's products by reworking batches without approval from FDA, including on some occasions regrinding tablets and adding lubricants. To conceal these practices from FDA, Halsey employees did not document these reworks on the batch record. For some Halsey products, problems encountered in manufacturing large production batches led Halsey employees to develop alternate formulas and manufacturing processes that replaced the FDA-approved master formulas. These alternate formulas, kept on handwritten ''phony cards,'' sometimes substituted unapproved inactive ingredients. Although Halsey employees followed the phony card formulas, they created false batch records that made it appear as though Halsey had followed the FDA-approved master formulas, with the intent to conceal the phony card system from FDA.

For the product quinidine gluconate 324-milligram (mg) tablets, Halsey employees created a phony card formula to solve a problem with the dissolution rate of large-scale production batches. Quinidine gluconate is a medication that treats irregular heartbeats. The phony card formula included additions of the unapproved inactive ingredients magnesium stearate and stearic acid. Mr. Marcus became aware of the unapproved deviations in the formula and manufacturing process for quinidine gluconate. With other members of Halsey's management, Mr. Marcus discussed filing the required preapproval supplement to get FDA's approval for those changes. However, Mr. Marcus and other members of Halsey's management realized that FDA would consider the changes significant and would probably require an expensive bioequivalence study to test the performance of Halsey's alternate formula. Because filing a preapproval supplement might require an additional bioequivalence study and delay Halsey's marketing of the product for years, Mr. Marcus and the others decided to continue using the phony card system without filing a supplement. Mr. Marcus and other Halsey employees caused batch number 2F24H of quinidine gluconate 324-mg tablets to be manufactured according to the unapproved, phony card formula, introduced into interstate commerce, and delivered to Baltimore, MD on August 27, 1992.

Halsey employees used alternate formulas and created false batch records for other products, including acetaminophen and codeine phosphate tablets, propylthiouracil tablets, and metronidazole tablets. When an FDA inspection in 1989 revealed irregularities at the company, Mr. Marcus and others directed the creation of false batch records for acetaminophen and codeine phosphate tablets in an attempt to cover up the phony card system.

During the course of manufacturing research and development batches, Halsey employees created false paperwork for submission to FDA to make it appear that they had made more or larger batches than they actually made. Mr. Marcus later became aware of that conduct and participated in conduct to cover up those falsifications.

Between August 23, 1989, and October 11, 1989, FDA inspected Halsey's facilities to determine Halsey's compliance with the act. On or about August 29, 1989, Mr. Marcus directed a Halsey employee to create a falsified raw material inventory card for fenoprofen calcium. Mr. Marcus knew that the raw material card falsely stated that Halsey had received 50 kilograms of fenoprofen calcium on September 11, 1987. Mr. Marcus knew that in fact Halsey had received half that amount. The purpose of the falsification was to conceal from FDA that Halsey did not have enough raw material from that shipment to manufacture its pilot batches in the sizes represented in ANDA's for the generic drug products fenoprofen calcium 200-mg capsules, fenoprofen calcium 300-mg capsules,

and fenoprofen calcium 600-mg tablets. Mr. Marcus understood that the falsified raw material card would be provided to FDA inspectors that day, and in fact, the falsified card was produced to FDA inspectors that day.

II. FDA's Finding

Section 306(b)(2)(B)(i) of the act (21 U.S.C. 335a(b)(2)(B)(i)) permits FDA to debar an individual if it finds that the individual has been convicted of a felony under Federal law for conspiracy to commit a criminal offense related to the development or approval, including the process for the development or approval, of any drug product, or otherwise related to the regulation of drug products, and that the offense undermined the process for the regulation of drugs. Mr. Marcus' felony conviction under 18 U.S.C. 371 for conspiracy to defraud the United States, specifically for conspiracy to submit false ANDA information to FDA, is a conviction related to the development or approval of drug products. Submission of false information to an ANDA undermines the process for the regulation of drugs. Accordingly, the agency finds that Mr. Marcus is eligible for permissive debarment under section 306(b)(2)(B)(i) of the act.

Under section 306(l)(2) of the act, permissive debarment may be applied when an individual acted or was convicted within the 5 years preceding initiation of an agency action proposed to be taken under section 306(b)(2)(B) of the act. Under section 306(c)(2)(A)(iii) of the act, the agency may debar Mr. Marcus for up to 5 years for each offense. FDA finds that Mr. Marcus is eligible to be debarred for 5 years under section 306(b)(2)(B)(i) of the act because he was convicted of one count of conspiracy to commit a crime relating to the development or approval of drug products.

Section 306(c)(3) of the act provides several considerations for determining the appropriateness and the period of permissive debarment. The considerations applicable to a decision to debar an individual include: (1) Nature and seriousness of the offense involved, (2) nature and extent of management participation in any offense, (3) nature and extent of voluntary steps to mitigate the impact on the public, and (4) prior convictions involving matters within the jurisdiction of the FDA. These considerations are discussed below.

A. Nature and Seriousness of the Offense Involved

Mr. Marcus was convicted of one count of conspiracy to defraud the United States for knowingly permitting, and sometimes directing, employees of Halsey to manufacture prescription drugs according to formulas that deviated from FDA-approved formulas. Mr. Marcus committed violations with regard to three drugs: Quinidine gluconate tablets, acetaminophen and codeine tablets, and fenoprofen calcium tablets. Quinidine gluconate is used to treat irregular heartbeats; acetaminophen and codeine are used to treat mild to moderately severe pain; fenoprofen calcium is used for the treatment of arthritis.

The agency finds that Mr. Marcus' conduct: (1) Created a risk of injury to consumers; (2) potentially undermined the safety, effectiveness, and quality of several drugs; and (3) otherwise undermined the integrity of the drug approval and regulatory processes. Mr. Marcus' conduct created a risk of injury to consumers by marketing adulterated drugs. Mr. Marcus' conduct potentially undermined the safety, effectiveness, and quality of several drugs by changing master formulas and adding unapproved ingredients. Mr. Marcus' conduct undermined the integrity of the drug approval and regulatory process by leading FDA investigators to evaluate drugs different from those marketed by Halsey and by providing to consumers drugs that had not been approved by the FDA for distribution. Accordingly, the agency considers the conduct underlying Mr. Marcus' conviction an extremely unfavorable factor because Mr. Marcus' actions potentially undermined the safety and effectiveness of drugs used for life-threatening or serious conditions.

B. Nature and Extent of Management Participation in Any Offense

Mr. Marcus was the president and chief executive officer of Halsey. Mr. Marcus directed Halsey employees to prepare false batch records. Among other acts, Mr. Marcus caused a batch of quinidine gluconate 324-mg tablets to be manufactured according to an unapproved formula and to be introduced into interstate commerce. Therefore, the agency considers the nature and extent of Mr. Marcus' participation an unfavorable factor.

C. Nature and Extent of Voluntary Steps to Mitigate the Impact on the Public

Mr. Marcus was willing to testify as a witness for the Government, although the government did not call him. Accordingly, the agency considers Mr. Marcus' cooperation a favorable factor.

D. Prior Convictions

The agency is unaware of any additional convictions.

III. Proposed Action and Notice of Opportunity for a Hearing

Mr. Marcus' willingness to cooperate is outweighed by his leadership position within Halsey and, moreover, by the seriousness of Mr. Marcus' conduct with respect to public safety and the integrity of the drug approval process. Thus, based on the findings discussed above, and in particular the seriousness of Mr. Marcus' conduct with respect to the public safety and the integrity of the drug approval process, FDA proposes to issue an order under section 306(b)(2)(B) of the act debarring Mr. Marcus for a period of 5 years from providing services in any capacity to a person that has an approved or pending drug product application.

Under section 306(i) of the act and 21 CFR 10.50(c)(20), Mr. Marcus may request a hearing on disputed issues of material fact. Thus, in accordance with section 306 of the act and 21 CFR part 12, Mr. Marcus is hereby given notice of an opportunity for a hearing to show why he should not be debarred. If Mr. Marcus decides to seek a hearing, he must file a written notice of appearance and request for hearing on or before November 15, 1999. The procedures and requirements governing formal evidentiary hearings as applied to debarments are contained in 21 CFR part 12 and section 306(i) of the act.

Mr. Marcus' failure to file a timely written notice of appearance and request for hearing constitutes a waiver of his right to a hearing. If Mr. Marcus does not request a hearing in the manner prescribed by the regulations, the agency will not hold a hearing and will issue a final debarment order as proposed in this notice.

A request for a hearing may not rest upon mere allegations or denials but must present specific facts showing that there is a genuine and substantial issue of fact that requires a hearing. A hearing will be denied if the data and information Mr. Marcus submits, even if accurate, are insufficient to justify the factual determination urged. If it conclusively appears from the face of the information and factual analyses in Mr. Marcus' request for a hearing that there is no genuine and substantial issue of fact that would preclude the order of debarment, the Commissioner of Food and Drugs will deny Mr. Marcus' request for a hearing and enter a final order of debarment. The facts underlying Mr. Marcus' conviction are not at issue in this proceeding.

Mr. Marcus' request for a hearing, including any information or factual analyses relied on to justify a hearing, must be identified with Docket No. 99N–2674 and sent to the Dockets Management Branch (address above). Mr. Marcus must file four copies of all submissions pursuant to this notice of opportunity for hearing. The public availability of information in these submissions is governed by 21 CFR 10.20(j). Publicly available submissions may be seen in the Dockets Management Branch between 9 a.m. and 4 p.m., Monday through Friday.

This notice is issued under section 306 of the act and under authority delegated to the Director of the Center for Drug Evaluation and Research (21 CFR 5.99).

Dated: September 30, 1999.

Janet Woodcock,

Director, Center for Drug Evaluation and Research.

[FR Doc. 99–26938 Filed 10–14–99; 8:45 am]

BILLING CODE 4160–01–F

DEPARTMENT OF HEALTH AND HUMAN SERVICES

Food and Drug Administration

Food and Drug Administration/Industry Exchange Workshop on Medical Device Quality Systems Inspection Technique; Public Workshops; Addendum

AGENCY: Food and Drug Administration, HHS.

ACTION: Notice.

SUMMARY: The Food and Drug Administration (FDA), is announcing an additional workshop in the series of FDA/Industry Exchange Workshops being conducted. The original list of workshops was published in the September 10, 1999 **Federal Register**. Topics for discussion include: Development of QSIT, Compliance Program and Warning Letter (Pilot), Management Controls, Corrective and Preventive Action, Design Controls, and Industry Perspective of QSIT. This additional workshop will enhance the medical device community's understanding of QSIT, and the device industry's establishment of effective quality systems, thereby preventing regulatory problems during inspections.

Date, Time, and Location: The workshop will be held on November 30 from 8:30 a.m. to 4:30 p.m. local time in Englewood, CO at the location in the chart below.

Registration: Send registration information (including name, title, firm name, address, telephone, and fax number) along with the correct payment amount to the Registrar. Fees cover refreshments, organization and site costs, and materials. Space is limited, therefore interested parties are encouraged to register early. Please arrive early to ensure prompt registration. If you need special accomodations due to a disability, please inform the Registrar at least 7 days in advance of the workshop. A sample registration form is provided at the end of this document.

Contact Person: Herman B. Janiger, U.S. Food and Drug Administration, Northeast Region, (HFRNE–17), 850 Third Ave., Brooklyn, New York 11232, 718–340–7000 ext. 5528.

SUPPLEMENTARY INFORMATION:

In the fall of 1999, FDA field offices will begin using the QSIT natiowide as the primary tool for medical device inspections. QSIT was developed using a collaborative effort with stakeholders and tested in the three districts. The additional workshop is scheduled as follows:

TABLE 1

Workshop Address	Date and Local Time	Deadline to Register and Fee	Registrar and Cosponsor	FDA Contact Person
ENGLEWOOD: Hilton Hotel, Denver Tech Center South, 7801 Orchard Rd., Englewood, CO 303–779–6161.	Tuesday, November 30, 1999, 8:30 a.m. to 4:30 p.m.	Tuesday, November 16, 1999, $170.00	Denise Rooney, Association of Food and Drug Officials, P.O. Box 3425, York PA 17402, 717–757–2888, FAX 717–755–8089	Brenda C. Baumert, Small Business Representative, Southwest Regional Office, 214–655–810, ext. 133.

The above workshop further implements the FDA Plan for Statutory Compliance (developed under section 406 of the FDA Modernization Act (21 U.S.C. 393)) through working more closely with stakeholders and ensuring access to needed scientific and technical expertise. It also complies with the Small Business Regulatory Enforcement Fairness Act (Public Law 104–121) that requires outreach activities by Government agencies directed to small businesses. This notice announcing the workshops and a registration form may also be accessed at the CDRH website at http://www.fda.gov/cdrh/fedregin.html. The following information is requested for registration:

BILLING CODE 4160–01–F

REGISTRATION FORM

Quality System Inspection Technique (QSIT)

Regional Medical Device Workshop

Instructions: To register, complete this form and mail with registration fee to the Registrar for the workshop you wish to attend.

Date, _____

Location, _____

Fee enclosed, _____

Name, _____

Title, _____

Company, _____

Address, _____

Telephone, _____

Fax, _____

E-mail _____

Dated: October 6, 1999.

Margaret M. Dotzel,

Acting Associate Commissioner for Policy.

[FR Doc. 99–26804 Filed 10–14–99; 8:45 am]

BILLING CODE 4160–01–C

DEPARTMENT OF HEALTH AND HUMAN SERVICES

Food and Drug Administration

[Docket No. 99D–4201]

Guidance for Industry: Dioxin in Anti-caking Agents Used in Animal Feed and Feed Ingredients; Availability

AGENCY: Food and Drug Administration, HHS.

ACTION: Notice.

SUMMARY: The Food and Drug Administration (FDA) is announcing the availability of a guidance for industry entitled ''Dioxin in Anti-caking Agents Used in Animal Feed and Feed Ingredients.'' The guidance is intended to notify members of the feed industry of recent findings regarding the presence of dioxins in mined clays that may be used as anti-caking agents in animal feeds and to offer general advice regarding monitoring of these clays.

DATES: October 15, 1999. Submit written comments at any time.

ADDRESSES: Submit written comments to the Dockets Management Branch (HFA–305), Food and Drug Administration, 5630 Fishers Lane, rm. 1061, Rockville, MD 20852.

Copies of this guidance document may be obtained on the Internet from the CVM home page at http://www.fda.gov/cvm/fda/TOCs/guideline.html. Persons without internet access may submit written requests for single copies of the draft guidance to the Communications Staff (HFV–12), Center for Veterinary Medicine, Food and Drug Administration, 7500 Standish Pl., Rockville, MD 20855. Send one self-addressed adhesive label to assist that office in processing your requests.

FOR FURTHER INFORMATION CONTACT:

For general questions regarding the guidance document: Judy A. Gushee, Center for Veterinary Medicine (HFV–230), Food and Drug Administration, 7500 Standish Pl., Rockville, MD 20855, 301–827–0150, e-mail: jgushee@cvm.fda.gov.

For scientific questions regarding the guidance document: Randall A. Lovell, Center for Veterinary Medicine (HFV–222), Food and Drug Administration, 7500 Standish Pl., Rockville, MD 20855, 301–827–0176, e-mail: rlovell@cvm.fda.gov.

SUPPLEMENTARY INFORMATION: FDA is announcing the availability of a guidance for industry entitled ''Dioxin in Anti-caking Agents Used in Animal Feed and Feed Ingredients.'' Nearly 2 years ago, a multiagency investigation tracked a previously unknown source of dioxins in the human food supply back to a mined clay anti-caking agent, called ball clay, used in animal feeds and feed ingredients. Together, industry and Government moved to swiftly eliminate the use of ball clay in the animal feeds, and thereby, removed a source of dioxins in the human food chain.

On October 7, 1997, FDA sent a letter regarding this issue to members of the feed industry. In that letter, we stated that the ultimate origin and the scope of dioxin presence in clay deposits were unknown and, for that reason, mined clay products of all types should be used with caution in the production of animal feeds. We advised companies offering mined clay products for animal feed uses to ensure that their products were not contaminated with dioxins.

Since that time, FDA has been collecting additional data. The information thus far indicates that dioxins can be present in mined clay products other than ball clay and that dioxin congeners other than 2,3,7,8-tetrachlorodibenzodioxin may be present in important amounts. The guidance that is the subject of this notice summarizes the data and suggests the need for increased caution in industry surveillance for dioxins in feed ingredients.

This guidance document is being issued as a Level 1 guidance consistent with FDA's good guidance practices (62 FR 8961, February 27, 1997). It is being implemented immediately without prior public comment because of concern for public health. The guidance represents the agency's current thinking on the implications of dioxins in mined clays used in animal feeds and feed ingredients. It does not create or confer any rights for or on any person and does not operate to bind FDA or the public. An alternative approach may be used if such approach satisfies the requirements of the applicable statute, regulations, or both.

Interested persons may submit written comments on the guidance to the Dockets Management Branch (address above). Two copies of any comments are to be submitted, except that individuals may submit one copy. Comments are to be identified with the docket number found in brackets in the heading of this document. The guidance and received comments are available for public examination in the Dockets Management Branch between 9 a.m. and 4 p.m., Monday through Friday.

Dated: October 5, 1999.

Margaret M. Dotzel,

Acting Associate Commissioner for Policy.

[FR Doc. 99–26886 Filed 10–14–99; 8:45 am]

BILLING CODE 4160–01–F

DEPARTMENT OF HEALTH AND HUMAN SERVICES

Health Care Financing Administration

[Document Identifier: HCFA–4040]

Agency Information Collection Activities: Proposed Collection; Comment Request

AGENCY: Health Care Financing Administration, HHS.

In compliance with the requirement of section 3506(c)(2)(A) of the Paperwork Reduction Act of 1995, the Health Care Financing Administration (HCFA), Department of Health and Human Services, is publishing the following summary of proposed collections for public comment. Interested persons are invited to send comments regarding this burden estimate or any other aspect of this collection of information, including any of the following subjects: (1) The necessity and utility of the proposed information collection for the proper performance of the agency's functions; (2) the accuracy of the estimated burden; (3) ways to enhance the quality, utility, and clarity of the information to be collected; and (4) the use of automated collection techniques or other forms of information technology to minimize the information collection burden.

Type of Information Collection Request: Extension of a currently approved collection;

Title of Information Collection: Request for Enrollment in Supplementary Medical Insurance and Supporting Regulations in 42 CFR 407.10 and 407.11;

Form No.: HCFA–4040 (OMB #0938–0245);

Use: The HCFA–4040 is used to establish entitlement to Supplementary Medical Insurance by Beneficiaries not eligible under Part A of Title XVIII or Title II of the Social Security Act. The HCFA–4040SP is the Spanish edition of this form.;

Frequency: Other: One Time Only;

Affected Public: Individuals or Households, Federal Government, and State, Local or Tribal Government;

Number of Respondents: 10,000;

Total Annual Responses: 10,000;

Total Annual Hours: 2,500.

To obtain copies of the supporting statement and any related forms for the proposed paperwork collections referenced above, access HCFA's Web Site address at http://www.hcfa.gov/regs/prdact95.htm, or E-mail your request, including your address, phone number, OMB number, and HCFA document identifier, to

Paperwork@hcfa.gov, or call the Reports Clearance Office on (410) 786–1326. Written comments and recommendations for the proposed information collections must be mailed within 60 days of this notice directly to the HCFA Paperwork Clearance Officer designated at the following address: HCFA, Office of Information Services, Security and Standards Group, Division of HCFA Enterprise Standards; Attention: Dawn Willinghan, Room N2–14–26, 7500 Security Boulevard, Baltimore, Maryland 21244–1850.

Dated: October 6, 1999.

John Parmigiani,

Manager, HCFA Office of Information Services, Security and Standards Group, Division of HCFA Enterprise Standards.

[FR Doc. 99–26996 Filed 10–14–99; 8:45 am]

BILLING CODE 4120–03–P

DEPARTMENT OF HEALTH AND HUMAN SERVICES

Health Care Financing Administration

[Document Identifier: HCFA–R–5]

Agency Information Collection Activities: Proposed Collection; Comment Request

AGENCY: Health Care Financing Administration, HHS.

In compliance with the requirement of section 3506(c)(2)(A) of the Paperwork Reduction Act of 1995, the Health Care Financing Administration (HCFA), Department of Health and Human Services, is publishing the following summary of proposed collections for public comment. Interested persons are invited to send comments regarding this burden estimate or any other aspect of this collection of information, including any of the following subjects: (1) The necessity and utility of the proposed information collection for the proper performance of the agency's functions; (2) the accuracy of the estimated burden; (3) ways to enhance the quality, utility, and clarity of the information to be collected; and (4) the use of automated collection techniques or other forms of information technology to minimize the information collection burden.

Type of Information Collection Request: Extension of a currently approved collection;

Title of Information Collection: Physician Certifications/Recertifications in Skilled Nursing Facilities (SNFs) Manual Instructions and Supporting Regulations in 42 CFR 424.20;

Form No.: HCFA–R–5 (OMB #0938–0454);

Use: The Medicare program requires as a condition for Medicare Part A payment for post-hospital skilled nursing facility (SNF) services, that a physician must certify and periodically recertify that a beneficiary requires a SNF level of care. The physician certification and recertification is intended to ensure that the beneficiary's need for services has been established and then reviewed and updated at appropriate intervals. The documentation is a condition for Medicare Part A payment for post-hospital SNF care.;

Frequency: On occasion;

Affected Public: State, Local or Tribal Government, individuals or households, business or other for-profit, and not-for-profit institutions;

Number of Respondents: 2,038,248;

Total Annual Responses: 947,816;

Total Annual Hours: 417,239.

To obtain copies of the supporting statement and any related forms for the proposed paperwork collections referenced above, access HCFA's Web Site address at http://www.hcfa.gov/regs/prdact95.htm, or E-mail your request, including your address, phone number, OMB number, and HCFA document identifier, to Paperwork@hcfa.gov, or call the Reports Clearance Office on (410) 786–1326. Written comments and recommendations for the proposed information collections must be mailed within 60 days of this notice directly to the HCFA Paperwork Clearance Officer designated at the following address: HCFA, Office of Information Services, Security and Standards Group, Division of HCFA Enterprise Standards; Attention: Dawn Willinghan, Room N2–14–26, 7500 Security Boulevard, Baltimore, Maryland 21244–1850.

Dated: October 5, 1999.

John Parmigiani,

Manager, HCFA Office of Information Services, Security and Standards Group, Division of HCFA Enterprise Standards.

[FR Doc. 99–26997 Filed 10–14–99; 8:45 am]

BILLING CODE 4120–03–P

DEPARTMENT OF HEALTH AND HUMAN SERVICES

Health Care Financing Administration

[HCFA–1091–N]

Medicare Program; Open Public Meeting on November 1, 1999 To Discuss Activities Related to the Collection of Encounter Data From Medicare+Choice Organizations for Risk Adjustment

AGENCY: Health Care Financing Administration (HCFA), HHS.

ACTION: Notice of meeting.

SUMMARY: This notice announces a public meeting to provide Medicare+Choice Organizations (M+COs), providers, practitioners, and other interested parties an opportunity to ask questions and raise issues regarding encounter data collection for risk adjustment. The meeting will address the following topics:

- Collection of physician encounter data.
- Collection of hospital outpatient encounter data.
- Training and customer support services.

DATES: The meeting is scheduled for November 1, 1999 from 9 a.m. until 4 p.m., e.s.t.

ADDRESSES: The meeting will be held in the HCFA Auditorium, 7500 Security Boulevard, Baltimore, Maryland, 21244–1850.

FOR FURTHER INFORMATION CONTACT: Yvette Cooper-Williams, (410) 786–5644, ycooper@hcfa.gov.

SUPPLEMENTARY INFORMATION:

Background

The Balanced Budget Act of 1997 (BBA) (Public Law 105–33) established the Medicare+Choice program that significantly expanded the health care options available to Medicare beneficiaries. Under the BBA, the Secretary of the Department of Health and Human Services (the Secretary) must implement a risk adjustment methodology that accounts for variations in per capita costs based on health status and other demographic factors for payment to Medicare+Choice organizations (M+COs). Risk adjustment implementation must start no later than January 1, 2000. The BBA also gives the Secretary the authority to collect inpatient hospital data for discharges on or after July 1, 1997, and additional data for services occurring on or after July 1, 1998. The schedule for encounter data submission through June 30, 2001 is as follows:

- September 10, 1999: Deadline for submission of Year 2 data (dates of

service July 1, 1998 through June 30, 1999) for CY 2000 payment.

- June 30, 2000: Deadline for submission of Year 2 data for purposes of final reconciliation of CY 2000 payments. Last date of service that will be accepted in abbreviated UB–92 format.
- September 8, 2000: Deadline for submission of Year 3 data (dates of service July 1, 1999 through June 30, 2000) for CY 2001 payment.
- October 1, 2000: Submission of physician data begins.
- December 31, 2000: Last date to submit abbreviated UB–92 (with dates of service not later than June 30, 2000).
- January 1, 2001: Submission of hospital outpatient data begins, with dates of services retroactive to October 1, 2000.
- January 30, 2001: Reconciliation of CY 2000 payments to include all Year 2 data submitted by June 30, 2000.

We have decided to implement a transition to comprehensive risk adjustment. The principal inpatient diagnostic cost group (PIP–DCG) model will be used in initial risk adjustment and a comprehensive risk adjustment model using diagnoses from physician, hospital outpatient, and physician encounters will be implemented in CY 2004. The transition schedule (as stated in the January 15, 1999 advance notice to M+COs) to the comprehensive model is as follows:

- CY 2000: 90 percent demographic model with 10 percent PIP–DCG method.
- CY 2001: 70 percent demographic model with 30 percent PIP–DCG method.
- CY 2002: 45 percent demographic model with 55 percent PIP–DCG method.
- CY 2003: 20 percent demographic model with 80 percent PIP–DCG method.
- CY 2004: 100 percent comprehensive risk adjustment (using full encounter data).

We are announcing a public meeting to provide an opportunity for M+COs, providers, practitioners, and other interested parties to ask questions and raise issues regarding encounter data collection for risk adjustment from M+COs. We intend to discuss our data collection efforts, systems processes, training approach, and customer services in order to provide information related to the implementation of the collection of additional encounter data.

We are announcing this public meeting to provide an opportunity for individuals and organizations familiar with issues related to physician and hospital outpatient data collection to furnish information and raise issues pertaining to future encounter data collection for risk adjustment. The agenda will include short presentations by HCFA staff on related topics and will conclude with a question-and-answer session.

Registration

Registration for this one-day public meeting is required and will be on a first-come, first-serve basis, limited to two attendees per organization. A waiting list will be available for additional requests. Registration will be done via the Internet at www.hcfa.gov/events or by paper forms available at the aforementioned Internet address. A confirmation notice will be sent to attendees upon finalization of registration.

Attendees will be provided with meeting materials at the time of the meeting. We will accept written questions or requests for meeting materials either before the meeting or up to 14 days after the meeting. Written submissions must be sent to: Health Care Financing Administration, ATTN: Yvette Cooper-Williams, Room C4–14–21, 7500 Security Boulevard, Baltimore, Maryland 21244–1850.

You may contact Yvette Cooper-Williams at: Telephone Number: (410) 786–5644, Fax Number (410) 786–1048, E-mail: ycooper@hcfa.gov.

Authority: Sections 1851 through 1859 of the Social Security Act (42 U.S.C. 1395w-21 through 1395w-28).

(Catalog of Federal Domestic Assistance Program No. 93.773 Medicare—Hospital Insurance Program; and No. 93.774, Medicare—Supplementary Medical Insurance Program)

Dated: October 12, 1999.

Michael M. Hash,

Deputy Administrator, Health Care Financing Administration.

[FR Doc. 99–27027 Filed 10–14–99; 8:45 am]

BILLING CODE 4120–01–P

DEPARTMENT OF HEALTH AND HUMAN SERVICES

National Institutes of Health

National Cancer Institute; Notice of Meeting

Pursuant to section 10(d) of the Federal Advisory Committee Act, as amended (5 U.S.C. Appendix 2), notice is hereby given of the meeting of the Board of Scientific Counselors, National Cancer Institute.

The meeting will be closed to the public in accordance with the provisions set forth in sections 552b(c)(6), and 552b(c)(9)(B), Title 5 U.S.C., as amended. The discussions could reveal information of a personal nature where disclosure would constitute a clearly unwarranted invasion of personal privacy and the premature disclosure of discussions related to personnel and programmatic issues would be likely to significantly frustrate the subsequent implementation of recommendations.

Name of Committee: Board of Scientific Counselors, National Cancer Institute Subcommittee A—Clinical Sciences and Eidemiology.

Date: November 15, 1999.

Time: 8:30 am to 4:00 pm.

Agenda: To review and evaluate Site Visit Reports; Discussion of personnel and programmatic issues.

Place: National Cancer Institute, Building 31, C Wing, 6th Floor, Conference Room 6, 9000 Rockville Pike, Bethesda, MD 20892.

Contact Person: Maureen Johnson, PhD., Executive Secretary, Institute Review Office, Office of the Director, National Cancer Institute, National Institutes of Health, 6116 Executive Boulevard, Room 321, Bethesda, MD 20892, (301) 496–7628.

(Catalogue of Federal Domestic Assistance Program Nos. 93.392, Cancer Construction; 93.393, Cancer Cause and Prevention Research; 93.394, Cancer Detection and Diagnosis Research; 93.395, Cancer Treatment Research; 93.396, Cancer Biology Research; 93.397, Cancer Centers Support; 93.398, Cancer Research Manpower; 93.399, Cancer Control, National Institutes of Health, HHS)

Dated: October 7, 1999.

LaVerne Y. Stringfield,

Director, Office of Federal Advisory Policy.

[FR Doc. 99–26922 Filed 10–14–99; 8:45 am]

BILLING CODE 4140–01–M

DEPARTMENT OF HEALTH AND HUMAN SERVICES

National Institutes of Health

National Cancer Institute; Notice of Meeting

Pursuant to section 10(d) of the Federal Advisory Committee Act, as amended (5 U.S.C. Appendix 2), notice is hereby given of the meeting of the Board of Scientific Counselors, National Cancer Institute.

The meeting will be open to the public as indicted below, with attendance limited to space available. Individuals who plan to attend and need special assistance, such as sign language interpretation or other reasonable accommodations, should notify the Contact Person listed below in advance of the meeting.

The meeting will be closed to the public in accordance with the provisions set forth in sections

552b(c)(6) and 552b(c)(9)(B), Title 5 U.S.C., as amended. The discussions could reveal information of a personal nature where disclosure would constitute a clearly unwarranted invasion of personal privacy and the premature disclosure of discussions related to personnel and programmatic issues would be likely to significantly frustrate the subsequent implementation of recommendations.

Name of Committee: Board of Scientific Counselors, National Cancer Institute Subcommittee B—Basic Sciences.

Date: November 7–8, 1999.

Open: November 7, 1999, 7:00 p.m. to 7:40 p.m.

Agenda: Chairman's Remarks and Concept Review of the NCI Frederick System of Contracts.

Place: Hyatt Regency Bethesda, Diplomat/Ambassador Suites, One Bethesda Metro Center, Bethesda, MD 20814.

Closed: November 7, 1999, 7:40 p.m. to 8:50 p.m.

Agenda: To review and evaluate personal qualifications and performance, and competence of individual investigators.

Place: Hyatt Regency Bethesda, Diplomat/Ambassador Suites, One Bethesda Metro Center, Bethesda, MD 20814.

Closed: November 8, 1999, 8:00 a.m. to 5:00 p.m.

Agenda: To review and evaluate individual Principal Investigators; Site Visit Reports; Division Director's Report and Discussion of personnel and programmatic issues.

Place: National Cancer Institute, Building 31, C Wing, 6th Floor, Conference Rooms 6 and 7, 9000 Rockville Pike, Bethesda, MD 20892.

Contact Person: Florence E. Farber, Ph.D., Executive Secretary, Institute Review Office, Office of the Director, National Cancer Institute, National Institutes of Health, 6116 Executive Boulevard, Room 318, Bethesda, MD 20892, (301) 496–7628.

(Catalogue of Federal Domestic Assistance Program Nos. 93.392, Cancer Construction; 93.393, Cancer Cause and Prevention Research; 93.394, Cancer Detection and Diagnosis Research; 93.395, Cancer Treatment Research; 93.396, Cancer Biology Research; 93.397, Cancer Centers Support; 93.398, Cancer Research Manpower; 93.399, Cancer Control, National Institutes of Health, HHS)

Dated: October 7, 1999.

LaVerne Y. Stringfield,

Director, Office of Federal Advisory Policy.

[FR Doc. 99–26923 Filed 10–14–99; 8:45 am]

BILLING CODE 4140–01–M

DEPARTMENT OF HEALTH AND HUMAN SERVICES

National Institutes of Health

National Eye Institute; Notice of Meeting

Pursuant to section 10(d) of the Federal Advisory Committee Act, as amended (5 U.S.C. Appendix 2), notice is hereby given of a meeting of the National Advisory Eye Council.

The meeting will be open to the public as indicated below, with attendance limited space available. Individuals who plan to attend and need assistance, sign language interpretation or other reasonable accommodations, should notify the Contact Person listed below in advance of the meeting.

The meeting will be closed to the public in accordance with the provisions set forth in sections 552b(c)(4) and 552b(c)(6), Title 5 U.S.C., as amended. The grant applications and the discussions could disclose confidential trade secrets or commercial property such as patentable material, and personal information concerning individuals associated with the grant applications, the disclosure of which would constitute a clearly unwarranted invasion of personal privacy.

Name of Committee: National Advisory Eye Council.

Date: October 29, 1999.

Open: 8:30 a.m. to 11:30 a.m.

Agenda: Following opening remarks by the Director, NEI, there will be presentations by the staff of the Institute and discussions concerning Institute programs and policies.

Place: 6120 Executive Blvd., EPN Conference Room J, Rockville, MD 20852.

Closed: 11:30 a.m. to 5:00 p.m.

Agenda: To review and evaluate grant applications.

Place: 6120 Executive Blvd., EPN Conference Room J, Rockville, MD 20852.

Contact Person: Lois DeNinno, National Eye Institute, Executive Plaza South, Suite 350, 6120 Executive Blvd., MSC 7167, Bethesda, MD 20892 301–496–9110.

(Catalogue of Federal Domestic Assistance Program Nos. 93.867, Vision Research, National Institutes of Health, HHS)

Dated October 5, 1999.

LaVerne Y. Stringfield,

Director, Office of Federal Advisory Committee Policy.

[FR Doc. 99–26917 Filed 10–14–99; 8:45 am]

BILLING CODE 4140–01–M

DEPARTMENT OF HEALTH AND HUMAN SERVICES

National Institutes of Health

National Institute of Allergy and Infectious Diseases; Notice of Closed Meeting

Pursuant to section 10(d) of the Federal Advisory Committee Act, as amended (5 U.S.C. Appendix 2), notice is hereby given of the following meeting.

The meeting will be closed to the public in accordance with the provisions set forth in sections 552b(c)(4) and 552b(c)(6), Title 5 U.S.C., as amended. The grant applications and the discussions could disclose confidential trade secrets or commercial property such as patentable material, and personal information concerning individuals associated with the grant applications, the disclosure of which would constitute a clearly unwarranted invasion of personal privacy.

Name of Committee: National Institute of Allergy and Infectious Diseases Special Emphasis Panel, Center for AIDS Research.

Date: November 3–4, 1999.

Time: 8:30 a.m. to 5:30 p.m.

Agenda: To review and evaluate grant applications.

Place: The Governor's House Hotel, State Room, 1615 Rhode Island Ave., NW, Washington, DC 20036, 202–296–2100.

Contact Person: Edward W. Schroder, Scientific Review Administrator, Scientific Review Program, Division of Extramural Activities, NIAID, NIH, Room 2156, 6700–B Rockledge Drive, MSC 7610, Bethesda, MD 20892–7610, 301–496–2550.

(Catalogue of Federal Domestic Assistance Program Nos. 93.855, Allergy, Immunology, and Transplantation Research; 93.856, Microbiology and Infectious Diseases Research, National Institutes of Health, HHS)

Dated: October 6, 1999.

LaVerne Y. Stringfield,

Director, Office of Federal Advisory Committee Policy, NIH.

[FR Doc. 99–26914 Filed 10–14–99; 8:45 am]

BILLING CODE 4140–01–M

DEPARTMENT OF HEALTH AND HUMAN SERVICES

National Institutes of Health

National Institute of Diabetes and Digestive and Kidney Diseases; Notice of Closed Meeting

Pursuant to section 10(d) of the Federal Advisory Committee Act, as amended (5 U.S.C. Appendix 2), notice is hereby given of a meeting of the Board of Scientific Counselors, NIDDK.

The meeting will be closed to the public as indicated below in accordance

with the provisions set forth in section 552b(c)(b), Title 5 U.S.C., as amended for the review, discussion, and evaluation of individual intramural programs and projects conducted by the NATIONAL INSTITUTE OF DIABETES AND DIGESTIVE AND KIDNEY DISEASES, including consideration of personnel qualifications and performance, and the competence of individual investigators, the disclosure of which would constitute a clearly unwarranted invasion of personal privacy.

Name of Committee: Board of Scientific Counselors, NIDDK.

Date: November 17–19, 1999.

Time: November 17, 1999, 6:00 PM to Adjournment.

Agenda: To review and evaluate personal qualifications and performance, and competence of individual investigators.

Place: National Institutes of Health, Building 5, Room 127, Bethesda, MD 20892.

Contact Person: Allen M. Spiegel, MD. Dir, Division of Intramural Research, National Institute of Diabetes and Digestive and Kidney Diseases, National Institutes of Health, PHS, DHHS, Bethesda, MD 20892.

(Catalogue of Federal Domestic Assistance Program Nos. 93.847, Diabetes, Endocrinology and Metabolic Research; 93.848, Digestive Diseases and Nutrition Research; 93.849, Kidney Diseases, Urology and Hematology Research, National Institutes of Health, HHS)

Dated: October 6, 1999.

LaVerne Y. Stringfield,

Director, Office of Federal Advisory Committee Policy.

[FR Doc. 99–26915 Filed 10–14–99; 8:45 am]

BILLING CODE 4140–01–M

DEPARTMENT OF HEALTH AND HUMAN SERVICES

National Institutes of Health

National Institute of Diabetes and Digestive and Kidney Diseases; Notice of Closed Meetings

Pursuant to section 10(d) of the Federal Advisory Committee Act, as amended (5 U.S.C. Appendix 2), notice is hereby given of the following meetings.

The meetings will be closed to the public in accordance with the provisions set forth in sections 552b(c)(4) and 552b(c)(6), Title 5 U.S.C., as amended. The grant applications and the discussions could disclose confidential trade secrets or commercial property such as patentable material, and personal information concerning individuals associated with the grant applications, the disclosure of which would constitute a clearly unwarranted invasion of personal privacy.

Name of Committee: National Institute of Diabetes and Digestive and Kidney Diseases Special Emphasis Panel, ZDK1 GRB–1 (J1)P.

Date: November 3–4, 1999.

Time: 7:00 am to 7:00 pm.

Agenda: To review and evaluate grant applications.

Place: Holiday Inn, 5520 Wisconsin Ave, Palladian West, Chevy Chase, MD 20815.

Contact Person: Carolyn Miles, PhD, Scientific Review Administrator, Review Branch, DEA, NIDDK, Natcher Building, Room 6AS–43A, National Institutes of Health, Bethesda, MD 20892, (301) 594–7791.

Name of Committee: National Institute of Diabetes and Digestive and Kidney Diseases Special Emphasis Panel, ZDK1 GRB–2 (J1)P.

Date: November 15–16, 1999.

Time: 8:00 am to 5:00 pm.

Agenda: To review and evaluate grant applications.

Place: Doubletree Hotel, 1750 Rockville Pike, Rockville, MD 20852.

Contact Person: Shan S. Wong, PhD, Scientific Review Administrator, Review Branch, DEA, NIDDK, Natcher Building, Room 6 AS 25, National Institutes of Health, Bethesda, MD 20892, (301) 594–7797.

Name of Committee: National Institute of Diabetes and Digestive and Kidney Diseases Special Emphasis Panel, ZDK1 GRB–5 J3.

Date: November 23, 1999.

Time: 1:00 pm to 2:00 pm.

Agenda: To review and evaluate grant applications.

Place: 45 Center Drive, Rm./6AS–37E, Bethesda, MD 20892, (Telephone Conference Call).

Contact Person: Francisco O. Calvo, PhD, Chief, Special Emphasis Panel, Review Branch, DEA, NIDDK, National Institutes of Health, Room 6AS37D, Bldg. 45, Bethesda, MD 20892, (301) 594–8897.

(Catalogue of Federal Domestic Assistance Program Nos. 93.847, Diabetes, Endocrinology and Metabolic Research; 93.848, Digestive Diseases and Nutrition Research; 93.849, Kidney Diseases, Urology and Hematology Research, National Institutes of Health, HHS)

Dated: October 6, 1999.

LaVerne Y. Stringfield,

Director, Office of Federal Advisory Committee Policy.

[FR Doc. 99–26918 Filed 10–14–99; 8:45 am]

BILLING CODE 4140–01–M

DEPARTMENT OF HEALTH AND HUMAN SERVICES

National Institutes of Health

National Institute on Deafness and Other Communication Disorders; Notice of Meeting

Pursuant to section 10(d) of the Federal Advisory Committee Act, as amended (5 U.S.C. Appendix 2), notice is hereby given of a meeting of the Board of Scientific Counselors, NIDCD.

The meeting will be open to the public as indicated below, with attendance limited to space available. Individuals who plan to attend and need special assistance, such as sign language interpretation or other reasonable accommodations, should notify the Contact Person listed below in advance of the meeting.

The meeting will be closed to the public as indicated below in accordance with the provisions set forth in section 552b(c)(6), Title 5 U.S.C., as amended for the review, discussion, and evaluation of individual intramural programs and projects conducted by the NATIONAL INSTITUTE ON DEAFNESS AND OTHER COMMUNICATION DISORDERS, including consideration of personnel qualifications and performance, and the competence of individual investigators, the disclosure of which would constitute a clearly unwarranted invasion of personal privacy.

Name of Committee: Board of Scientific Counselors, NIDCD.

Date: November 5, 1999.

Open: 9:30 am to 9:55 am.

Agenda: For a report from the Scientific Director, NIDCD.

Place: 5 Research Court, Conference Room 2A07, Rockville, MD 20850.

Closed: 9:55 AM to adjournment.

Agenda: To review and evaluate personal qualifications and performance, and competence of individual investigators.

Place: 5 Research Court, Conference Room 2A07, Rockville, MD 20850.

Contact Person: Robert J. Wenthold, PhD., Acting Director, Division of Intramural Research, National Institute on Deafness and Other Communication Disorders, 5 Research Court, Room 2B28, Rockville, MD 20852, 301–402–2829.

(Catalogue of Federal Domestic Assistance Program Nos. 93.173, Biological Research Related to Deafness and Communicative Disorders, National Institutes of Health, HHS)

Dated: October 5, 1999.

LaVerne Y. Stringfield,

Director, Office of Federal Advisory Committee Policy.

[FR Doc. 99–26919 Filed 10–14–99; 8:45 am]

BILLING CODE 4140–01–M

DEPARTMENT OF HEALTH AND HUMAN SERVICES

National Institutes of Health

National Institute on Alcohol Abuse and Alcoholism; Notice of Closed Meeting

Pursuant to section 10(d) of the Federal Advisory Committee Act, as amended (5 U.S.C. Appendix 2), notice is hereby given of the following meting.

The meeting will be closed to the public in accordance with the provisions set forth in sections

552b(c)(4) and 552b(c)(6), Title 5 U.S.C., as amended. The grant applications and the discussions could disclose confidential trade secrets or commercial property such as patentable material, and personal information concerning individuals associated with the grant applications, the disclosure of which would constitute a clearly unwarranted invasion of personal privacy.

Name of Committee: National Institute on Alcohol Abuse and Alcoholism Special Emphasis Panel.

Date: October 19, 1999.

Time: 11:00 am to 12:30 pm.

Agenda: To review and evaluate grant applications.

Place: 6000 Executive Blvd., Suite 409, Rockville MD 20852 (Telephone Conference Call).

Contact Person: Mark R. Green, Phd., Chief, Extramural Project Review Branch, National Institute on Alcohol Abuse and Alcoholism, National Institutes of Health, Suite 409, 6000 Executive Blvd., Bethesda, MD 20892, 301–443–2860, mgreen@niaaa.nih.gov.

This notice is being published less than 15 days prior to the meeting due to the timing limitations imposed by the review and funding cycle.

(Catalogue of Federal Domestic Assistance Program Nos. 93.271, Alcohol Research Career Development Awards for Scientists and Clinicians; 93.272, Alcohol National Research Service Awards for Research Training; 93.273, Alcohol Research Programs; 93.891, Alcohol Research Center Grants, National Institutes of Health, HHS)

Dated: October 7, 1999.

LaVerne Y. Stringfield,

Director, Office of Federal Advisory Committee Policy.

[FR Doc. 99–26921 Filed 10–14–99; 8:45 am]

BILLING CODE 9140–01–M

DEPARTMENT OF HEALTH AND HUMAN SERVICES

National Institutes of Health

Center for Scientific Review; Amended Notice of Meeting

Notice is hereby given of a change in the meeting of the International and Cooperative Projects Study Section, October 14, 1999, 8:30 AM to October 15, 1999, 5:00 PM, Embassy Suites at the Chevy Chase Pavilion, 4300 Military Road, NW, Washington, DC 20015 which was published in the **Federal Register** on September 28, 1999, 64 FR 52337.

The meeting will be held at the Gaithersburg Hilton Hotel, 620 Perry Parkway, Gaithersburg, MD 20877. The dates and time remain the same. The meeting is closed to the public.

Dated: October 5, 1999.

LaVerne Y. Stringfield,

Director, Office of Federal Advisory Committee Policy.

[FR Doc. 99–26916 Filed 10–14–99; 8:45 am]

BILLING CODE 4140–01–M

DEPARTMENT OF HEALTH AND HUMAN SERVICES

National Institutes of Health

Center For Scientific Review; Notice of Closed Meetings

Pursuant to section 10(d) of the Federal Advisory Committee Act, as amended (5 U.S.C. Appendix 2), notice is hereby given of the following meetings.

The meetings will be closed to the public in accordance with provisions set forth in sections 552b(c)(4) and 552b(c)(6), Title 5 U.S.C., as amended. The grant applications and the discussions could disclose confidential trade secrets or commercial property such as patentable materials, and personal information concerning individuals associated with the grant applications, the disclosure of which would constitute a clearly unwarranted invasion of personal privacy.

Name of Committee: Center for Scientific Review Special Emphasis Panel, The History of Medicine Study Section.

Date: October 18, 1999.

Open: 8:30 am to 5:00 pm.

Agenda: To review and evaluate grant applications.

Place: Bethesda Holiday Inn, 8120 Wisconsin Avenue, Bethesda, MD 20814.

Contact Person: Luigi Giacometti, PhD., Scientific Review Administrator, Center for Scientific Review, National Institutes of Health, 6710 Rockledge Drive, Room 5208, MSC 7850, Bethesda, MD 20892, (301) 435–1246.

This notice is being published less than 15 days prior tot he meeting due to the timing limitations imposed by the review and funding cycle.

Name of Committee: Center for Scientific Review Special Emphasis Panel, ZRG1 VR–01.

Date: October 20, 1999.

Time: 2:00 pm to 4:00 pm.

Agenda: To review and evaluate grant applications.

Place: NIH, Rockledge 2, Bethesda, MD 20892, (Telephone Conference Call).

Contact Person: Rita Anand. Phd., Scientific Review, Administrator, Center for Scientific Review National Institutes of Health, 6701 Rockledge Drive, Room 4188, MSC 7808, Bethesda, MD 20892, (301) 435–1151.

This notice is being published less than 15 days prior to the meeting due to the timing limitations imposed by the review and funding cycle.

Name of Committee: Center for Scientific Review Special Emphasis Panel.

Date: October 21–22, 1999.

Time: 8:30 am to 5:00 pm.

Agenda: To review and evaluate grant applications.

Place: Wyndham Biscayne Bay, Miami, FL 33132.

Contact Person: Carole Jelsema, Phd., Scientific Review Administrator, National Institutes of Health, 6701 Rockledge Drive, Room 5222, MSC 7850, Bethesda, MD 20892, (303) 435–1248.

This notice is being published less than 15 days prior to the meeting due to the timing limitations imposed by the review and funding cycle.

Name of Committee: Center for Scientific Review Special Emphasis Panel, ZRG1 SSS–W (24).

Date: October 24, 1999.

Time: 4:00 pm to 9:00 pm.

Agenda: To review and evaluate grant applications.

Place: Holiday Inn Bethesda, 8120 Wisconsin Ave, Bethesda, MD 20814.

Contact Person: Dharam S. Dhindsa, DVM, PhD, Scientific Review Administrator, Center for Scientific Review, National Institutes of Health, 6701 Rockledge Drive, Room 5126, MSC 7854, Bethesda, MD 20892, (301) 435–1174, dhindsad@csr.nih.gov.

Name of Committee: Center for Scientific Review Special Emphasis Panel, ZRG1 SSS–W (26).

Date: October 25–26, 1999.

Time: 8:00 am to 5:00 pm.

Agenda: To review and evaluate grant applications.

Place: Holiday Inn Bethesda, 8120 Wisconsin Ave, Bethesda, MD 20814.

Contact Person: Dharam S. Dhindsa, DVM, Phd, Scientific Review Administrator, Center for Scientific Review, National Institutes of Health, 6701 Rockledge Drive, Room 5126, MSC 7854, Bethesda, MD 20892, (301) 435–1174, dhindsad@csr.nih.gov.

Name of Committee: Endoocrinology and Reproductive Sciences Initial Review Group Reproductive Endocrinology Study Section.

Date: October 25–26, 1999.

Time: 8:00 am to 2:00 pm.

Agenda: To review and evaluate grant applications.

Place: Gaithersburg Hilton, 620 Perry Parkway, Gaithersburg, MD 20877.

Contact Person: Abubakar A. Shaikh, DVM, PhD, Scientific Review Administrator, Center for Scientific Review, National Institutes of Health, 6701 Rockledge Drive, Room 6166, MSC 7892, (301) 435–1042.

Name of Committee: Cardiovascular Sciences Initial Review Group, Cardiovascular Study Section.

Date: October 25–26, 1999.

Time: 8:00 am to 5:00 pm.

Agenda: To review and evaluate grant applications.

Place: Chevy Chase Holiday Inn, 5520 Wisconsin Ave., Chevy Chase, MD 20815.

Contact Person: Gordon L. Johnson, PhD, Scientific Review Administrator, Center for Scientific Review, National Institutes of Health, 6701 Rockledge Drive, Room 4136, MSC 7802, Bethesda, MD 20892, (301) 435–1212, johnsong@crs.nih.gov.

Name of Committee: Biophysical and Chemical Sciences Initial Review Group, Physical Biochemistry Study Section.
Date: October 25–26, 1999.
Time: 8:30 am to 5:00 pm.
Agenda: To review and evaluate grant applications.
Place: Ramada Inn Rockville, 1775 Rockville Pike, Rockville, MD 20852.
Contact Person: Gopa Rakhit, PhD, Scientific Review Administrator, Center for Scientific Review, National Institute of Health, 6701 Rockledge Drive, Room 4154, MSC 7806, Bethesda, MD 20892, (301) 435–1721, rakhitg@csr.nih.gov.

Name of Committee: Musculoskeletal and Dental Sciences Initial Review Group, Oral Biology and Medicine Subcommittee 2.
Date: October 25–26, 1999.
Time: 8:30 am to 5:00 pm.
Agenda: To review and evaluate grant applications.
Place: Holiday Inn Hotel & Suites, 625 First Street, Alexandria, VA 22314.
Contact Person: Priscilla Chen, PhD, Scientific Review Administrator, Center for Scientific Review, National Institutes of Health, 6701 Rockledge Drive, Room 4104, MSC 7814, Bethesda, MD 20892, (301) 435–1787.

Name of Committee: Center for Scientific Review Special Emphasis Panel.
Date: October 25, 1999.
Time: 8:30 am to 5:00 pm.
Agenda: To review and evaluate grant applications.
Place: River Inn, 924 25th Street, NW, Washington, DC 20037.
Contact Person: Gloria B. Levin, PhD, Scientific Review Administrator, Center for Scientific Review, National Institutes of Health, 6701 Rockledge Drive, Room 3166, MSC 7848, Bethesda, MD 20892, (301) 435–1017, leving@csr.nih.gov.

Name of Committee: Cardiovascular Sciences Initial Review Group, Cardiovascular and Renal Study Section.
Date: October 25–26, 1999.
Time: 8:30 am to 3:00 pm.
Agenda: To review and evaluate grant applications.
Place: Holiday Inn, 8777 Georgia Avenue, Silver Spring, MD 20910.
Contact Person: Anthony C. Chung, PhD, Scientific Review Administrator, Center for Scientific Review, National Institutes of Health, 6701 Rockledge Drive, Room 4138, MSC 7802, Bethesda, MD 20892, (301) 435–1213.

Name of Committee: Center for Scientific Review Special Emphasis Panel.
Date: October 25, 1999.
Time: 2:00 pm to 3:30 pm.
Agenda: To review and evaluate grant applications.
Place: NIH, Rockledge 2, Bethesda, MD 20892, (Telephone Conference Call).
Contact Person: Syed Amir, PhD, Scientific Review Administrator, Center for Scientific Review, National Institutes of Health, 6701 Rockledge Drive, Room 6168, MSC 7892, Bethesda, MD 20892, (301) 435–1043.

Name of Committee: Center for Scientific Review Special Emphasis Panel.
Date: October 26–27, 1999.
Time: 8:30 am to 4:00 am.
Agenda: To review and evaluate grant applications.
Place: Holiday Inn Chevy Chase, 5520 Wisconsin Avenue, Chevy Chase, MD 20815.
Contact Person: Michael Micklin, PhD, Scientific Review Administrator, Center for Scientific Review, National Institutes of Health, 6701 Rockledge Drive, Room 3178, MSC 7848, Bethesda, MD 20892, (301) 435–1258, micklinm@csr.nih.gov.

Name of Committee: Center for Scientific Review Special Emphasis Panel.
Date: October 26, 1999.
Time: 1:00 pm to 5:00 pm.
Agenda: To review and evaluate grant applications.
Place: NIH, Rockledge 2, Bethesda, MD 20892
Contact Person: Russell T. Dowell, PhD, Scientific Review Administrator, Center for Scientific Review, National Institutes of Health, 6701 Rockledge Drive, Room 4118, MSC 7818, Bethesda, MD 20892, (301) 435–1169, dowellr@drg.nih.gov.

Name of Committee: Center for Scientific Review Special Emphasis Panel.
Date: October 26, 1999.
Time: 1:30 pm to 3:00 pm.
Agenda: To review and evaluate contract proposals.
Place: NIH, Rockledge 2, Bethesda, MD 20892, (Telephone Conference Call).
Contact Person: Anshumali Chaudhari, Phd, Scientific Review Administrator, Center for Scientific Review, National Institutes of Health, 6701 Rockledge Drive, Room 4124, MSC 7802, Bethesda, MD 20892, (301) 435–1210.

Name of Committee: Oncological Sciences Initial Review Group Experimental Therapeutics Subcommittee 2.
Date: October 27–29, 1999.
Time: 8:30 am to 4:00 pm.
Agenda: To review and evaluate grant applications.
Place: Embassy Suites, Chevy Chase Pavillion, 4300 Military Road, NW, Washington, DC 20015.
Contact Person: Marcia Litwack, PhD, Scientific Review Administrator, Center for Scientific Review, National Institutes of Health, 6701 Rockledge Drive, Room 4150, MSC 7804, Bethesda, MD 20892, (301) 435–1719.

Name of Committee: Infectious Diseases and Microbiology Initial Review Group Microbial Physiology and Genetics Subcommittee 1.
Date: October 27–28, 1999.
Time: 8:30 am to 6:00 pm.
Agenda: To review and evaluate grant applications.
Place: One Washington Circle Hotel, Conference Center, One Washington Circle, Washington, DC 20037.
Contact Person: Martin L. Slater, PhD, Scientific Review Administrator, Center for Scientific Review, National Institutes of Health, 6701 Rockledge Drive, Room 4184, MSC 7808, Bethesda, MD 20892, (301) 435–1149.

Name of Committee: Center for Scientific Review Special Emphasis Panel BBCB–1.
Date: October 27, 1999.
Time: 12:00 pm to 2:00. pm.
Agenda: To review and evaluate grant applications.
Place: NIH, Rockledge 2, Bethesda, MD 20892, (Telephone Conference Call).
Contact Person: Donald Schneider, PhD, Scientific Review Administrator, Center for Scientific Review, National Institutes of Health, 6701 Rockledge Drive, Room 4172, MSC 7806, Bethesda, MD 20892, (301) 435–1727.

(Catalogue of Federal Domestic Assistance Program Nos. 93.306, Comparative Medicine, 93.306; 93.333, Clinical Research, 93.333, 93.337, 93.393–93.396, 93.837–93.844, 93.846–93.878, 93.892, 93.893, National Institutes of Health, HHS)

Dated: October 8, 1999.

LaVerne Y. Stringfield,

Director, Office of Federal Advisory Committee Policy.

[FR Doc. 99–26920 Filed 10–14–99; 8:45 am]

BILLING CODE 4140–01–M

DEPARTMENT OF HOUSING AND URBAN DEVELOPMENT

[Docket No. FR–4432–N–41]

Federal Property Suitable as Facilities To Assist the Homeless

AGENCY: Office of the Assistant Secretary for Community Planning and Development, HUD.

ACTION: Notice.

SUMMARY: This Notice identifies unutilized, underutilized, excess, and surplus Federal property reviewed by HUD for suitability for possible use to assist the homeless.

EFFECTIVE DATE: October 15, 1999.

FOR FURTHER INFORMATION CONTACT: Clifford Taffet, Department of Housing and Urban Development, Room 7262, 451 Seventh Street SW, Washington, DC 20410; telephone (202) 708–1234; TTY number for the hearing- and speech-impaired (202) 708–2565, (these telephone numbers are not toll-free), or call the toll-free Title V information line at 1–800–927–7588.

SUPPLEMENTARY INFORMATION: In accordance with the December 12, 1988 court order in *National Coalition for the Homeless* v. *Veterans Administration,* No. 88–2503–OG (D.D.C.), HUD publishes a Notice, on a weekly basis, identifying unutilized, underutilized, excess and surplus Federal buildings and real property that HUD has reviewed for suitability for use to assist the homeless. Today's Notice is for the purpose of announcing that no additional properties have been determined suitable or unsuitable this week.

Dated: October 7, 1999.

Fred Karnas, Jr.,

Deputy Assistant Secretary for Economic Development.

[FR Doc. 99–26687 Filed 10–14–99; 8:45 am]

BILLING CODE 4210–29–M

DEPARTMENT OF THE INTERIOR

Fish and Wildlife Service

Draft Partial Restoration Plan and Environmental Assessment Addressing Injuries to Migratory Birds and Threatened and Endangered Species at the Tar Creek Superfund Site, Ottawa County, OK

AGENCY: Fish and Wildlife Service, Interior.

ACTION: Notice of availability.

SUMMARY: The U.S. Fish and Wildlife Service proposes to protect habitat for the endangered gray bat, threatened Ozark cavefish and bald eagle, and migratory birds through acquisition of land in fee or easement, or management agreements with land owners. Such alternatives will provide partial compensation to the public for injuries to these trust resources from releases of hazardous chemicals from mining activities at the Tar Creek Superfund Site, Ottawa County, Oklahoma.

DATES: Written comments on the partial restoration plan and environmental assessment must be received within November 29, 1999.

ADDRESSES: Copies of the draft restoration plan and environmental asssessment are available on the Internet at http://ifw2es.fws.gov/library, or requested from the Service at:

U.S. Fish and Wildlife Service, 222 South Houston, Suite A, Tulsa, Oklahoma 74127, 918/581–7458

or

U.S. Fish and Wildlife Service, Ecological Services (HC/EC), P.O. Box 1306, Albuquerque, New Mexico 87103, 505/248–6648

Written data or comments should be submitted to the NRDAR Coordinator, Division of Habitat Conservation/ Environmental Contaminants, Ecological Services, P.O. Box 1306, Albuquerque, New Mexico 87103, or via the website. All comments received, including names and addresses, will become part of the official administrative record and may be made available to the public.

FOR FURTHER INFORMATION CONTACT: The U.S. Fish and Wildlife Service, Ecological Services, Division of Habitat Conservation/Environmental Contaminants, P.O. Box 1306, Albuquerque, New Mexico 87103. Documents and other information submitted with these applications are available for review, subject to the requirements of the Privacy Act and Freedom of Information Act, by any party who submits a written request for a copy of such documents within November 29, 1999, to the address above.

SUPPLEMENTARY INFORMATION:

Background

The Tar Creek Superfund site, located in Ottawa County, Oklahoma, is one of three superfund sites located within the Tri-State Mining District of Kansas, Missouri, and Oklahoma. The district contained multiple lead and zinc mines after the early 1900s which operated until deposits were depleted in the 1970's. Acidic groundwater surfacing through old air shafts and other openings contaminated the Tar Creek drainage and its associated wetlands and bottomland hardwoods. The bankruptcy of two major mining companies in the 1990's led the Department of Interior to collect partial damages for injuries to trust resources, specifically migratory birds and endangered and threatened species. Endangered and Threatened species of concern at the Site are endangered gray bat, and threatened Ozark cavefish and bald eagle. Alternatives for expenditure of the funds collected through these bankruptcies center on allowing the site to naturally restore itself through time (no action, Alternative A), or protection of habitat through acquisition in fee or easement, or management agreements with land owners (Alternatives B–D). Specifically Alternative B provides for the acquisition and protection of an Ottawa County endangered bat maternity cave, Alternative C protects high quality bottomland forest along the Neosho River, and Alternative D acquires and protects a large continuous stand of Ozark forest and Federally endangered bat caves in Adair County, Oklahoma.

The no action alternative is not a preferred alternative because it takes no on-site restoration actions and accepts that there will be continued injuries at the site over a long period of time, yet provides no off-site actions to restore the injured or comparable resources. In addition, the no action alternative fails to use the recovered funds on restoration, as mandated by the natural resources provisions in the Superfund law. Since other alternatives provide some mix of protection to trust resources, all are viable candidates for implementation. Because costs of implementation for alternatives B—D will be achieved through negotiation with landowners, implementation of more than one alternative may be attainable as available funds are depleted. Alternatives B and C are closest to the site and Alternative D protects caves having the greatest threat from development. Because alternative B has potential available management, through the adjacent Boy Scout Camp, it is the preferred alternative. Alternative D follows, due to threat from development, and alternative C, due to its inherent significance to migratory birds and bat foraging habitat. Implementation of the preferred alternative will commence upon signature of the final Partial Restoration Plan, and associated Finding of No Significant Impact.

The Service will place notices in the Tulsa World, a newspaper of general circulation in the state, the Daily Oklahoman, a newspaper circulated in the State Capitol and central and western Oklahoma, and the Miami Daily Herald, a newspaper circulated in the general area of the Site, and will make copies available at the Miami, Oklahoma Public Library concurrently with this **Federal Register** notice. Copies can also be obtained from the Internet at http://ifw2es.fws.gov/library.

The current comment period on this proposal closes on November 29, 1999. Written comments may be submitted to the Service office in the **ADDRESSES** section.

Author

The primary author of this notice is Karen E. Cathey (see **ADDRESSES**).

Authority

The authority for this action is the Comprehensive Environmental Response, Compensation, and Liability Act (CERCLA) of 1980, through its Natural Resource Damage Assessment and Restoration (NRDAR) provisions (43 CFR Part 11).

Dated: October 8, 1999.

Stephen W. Parry,

Acting Regional Director, Region 2, Fish and Wildlife Service.

[FR Doc. 99–26932 Filed 10–14–99; 8:45 am]

BILLING CODE 4310–55–P

DEPARTMENT OF THE INTERIOR

Bureau of Land Management

[OR–110–0777–30–24–1A; HAG 0–0001]

Rescinding Closure of Public Lands

AGENCY: Bureau of Land Management, DOI.

ACTION: The notice published on page 44041 in the issue of Thursday, August 12, 1999, closing 29, Section 31, Section 33, Section 34, Section 35; T. 37 S., R. 7 W., Willamette Meridian. Section 2, Section 3, Section 5, Section 7, Section 11, and Section 15; T. 38 S., R. 7 W., Willamette Meridian is hereby rescinded.

FOR FURTHER INFORMATION CONTACT: Ron Wenker, District Manager, Medford District Office, at (541) 770–2200.

Dated: October 4, 1999.

Ron Wenker,

District Manager.

[FR Doc. 99–26994 Filed 10–14–99; 8:45 am]

BILLING CODE 4310–33–M

DEPARTMENT OF THE INTERIOR

Bureau of Land Management

[NM–050–1110–PG; NMNM 95104]

Public Land Order No. 7382; Withdrawal of Public Lands for the Devil's Backbone Desert Bighorn Sheep Habitat Area; New Mexico

AGENCY: Bureau of Land Management, Interior.

ACTION: Correction notice.

SUMMARY: In **Federal Register** Volume 64, No. 57, Page 14463, of Thursday, March 25, 1999, under New Mexico Principal Meridian, delete line 10; sec. 22, NE¼, N½NW½, SE¼W, E½SW¼, replace with sec. 22, NE¼, N½NW¼, SE¼NW¼, E½SW¼.

Dated: October 6, 1999.

Kate Padilla,

Field Manager.

[FR Doc. 99–26991 Filed 10–14–99; 8:45 am]

BILLING CODE 4310–MW–U

DEPARTMENT OF THE INTERIOR

Bureau of Land Management

[AZ–050–00–1430–01; AZA 29964, AZA 29970–AZA 29971, AZA 29973–AZA 29975, AZA 29977, AZA 29979–AZA 29983, AZA 29985–AZA 29989]

Arizona: Notice of Realty Action; Competitive Sale of Public Land in Quartzsite, La Paz County, AZ

AGENCY: Bureau of Land Management, Interior.

ACTION: Extension of notice.

SUMMARY: The following land in La Paz County, Arizona, has been found suitable for disposal under section 203 and 209 of the Federal Land Policy and Management Act of 1976 (90 Stat. 2750, 43 U.S.C. 1713). The extension will allow additional time to complete the sale.

Gila and Salt River Meridian, Arizona

T. 4 N., R. 19 W.,
Sec. 22, NE¼NE¼SE¼
Sec. 23, N½SW¼, N½SE¼SW¼, SW¼SE¼SW¼;
Sec. 29, W½NE¼NE¼NE¼, W½NW¼NE¼NE¼, NW¼NE¼, W½NE¼NW¼, SE¼NE¼NW¼, NW¼NW¼.

Aggregating 240.00 acres, more or less.

SUPPLEMENTARY INFORMATION: On December 20, 1996, the Yuma Field Office published a notice for this public land sale in the **Federal Register** (61 FR 67342). This notice segregated the subject public land from appropriation under the public land laws, including the mining laws, pending disposition of the action or 270 days from the date of publication of the notice in the **Federal Register**. Three extensions of the Notice have been published in the **Federal Register**: September 23, 1997 (62 FR 49701); June 1, 1998 (63 FR 29746); and January 22, 1999 (64 FR 3543–3544). Upon publication of this Notice in the **Federal Register**, the segregation will be extended pending disposition of the action or for another 270-day period, whichever occurs first.

FOR FURTHER INFORMATION CONTACT: Debbie DeBock, Realty Specialist, Yuma Field Office, 2555 East Gila Ridge Road, Yuma, AZ 85365; telephone number (520) 317–3208.

Dated: October 8, 1999.

Gail Acheson,

Field Manager.

[FR Doc. 99–26995 Filed 10–14–99; 8:45 am]

BILLING CODE 4310–32–M

DEPARTMENT OF THE INTERIOR

Minerals Management Service (MMS)

Outer Continental Shelf (OCS) Policy Committee of the Minerals Management Advisory Board; Notice and Agenda for Meeting

AGENCY: Minerals Management Service, Interior.

SUMMARY: The OCS Policy Committee of the Minerals Management Advisory Board will meet at the Sheraton Crystal City in Arlington, Virginia, on October 27–28, 1999.

The agenda will cover the following principal subjects:

Oceans Report: A Follow-Up Report From the National Oceans Conference. This presentation will include an update on Vice President Gore's follow-up report on the President's moratoria decision that was presented September 2, 1999.

Hard Minerals Update. This presentation will address the Marine Minerals Program funding; the status of the MMS's guidelines and policies on use of Federal sand; the negotiations with States on use of Federal sand; and an update on the Hard Minerals Subcommittee activities and other pertinent hard minerals information.

Deep Water Gulf of Mexico (GOM). This panel presentation will address developments in the deep water of the GOM and its future contribution.

Recent Advances in Oil Spill Response Technology. This panel presentation will provide an overview of the MMS's oil spill response research and direct results from MMS funded research, the MMS unannounced drill policy, and the Ohmsett facility. The presentation will also address the U.S. Coast Guard's role in oil spill response, readiness, research and development activities. The Planned Deepwater Oil Release and Blowout Modeling Study, a joint industry project cooperatively managed and funded by the Offshore Operators Committee and MMS, will also be discussed.

OCS Revenue Sharing Update. This presentation will address the current status of the OCS revenue sharing bills.

Congressional Update. This presentation will focus on the status of the Coastal Zone Management Act reauthorization and pending revised regulations, and other timely congressional issues related to the OCS Program.

Environmental Forum Update. This presentation will provide a summary of the October 26, 1999, proceedings.

Natural Gas Supply/Demand. This panel presentation will address the

following items: recent studies/results; 30 TCF of gas needed to supply the nation and how we get there; the long-term gas alternatives, such as methane hydrates (clathrates); and the State's (Texas) response to rising gas demand.

OCS Scientific Committee Update. This presentation will provide an update on the activities of the Scientific Committee. It will also highlight the activities that are related to the GOM deepwater activities, oil spill contingency planning, natural gas supply/demand, and any other topics that are relevant to both Committees.

MMS Regional Updates. The Regional Directors will discuss activities in their respective areas. Particular items of interest: Lease Sale 176, National Petroleum Reserve-Alaska results, Northstar Project, Liberty Project, Lease Sale 181, Deepwater environmental impact statement, Chevron's Florida Natural Gas Development Project, Florida Marine Spill Analysis System, and the future of existing California OCS Leases.

The meeting is open to the public. Upon request, interested parties may make oral or written presentations to the OCS Policy Committee. Such requests should be made no later than October 22, 1999, to the Minerals Management Service, 381 Elden Street, MS–4001, Herndon, Virginia, 20170, Attention: Jeryne Bryant.

Requests to make oral statements should be accompanied by a summary of the statement to be made. For more information, call Jeryne Bryant at (703) 787–1211.

Minutes of the OCS Policy Committee meeting will be available for public inspection and copying at the MMS in Herndon.

DATES: Wednesday, October 27 and Thursday, October 28, 1999.

ADDRESSES: Sheraton Crystal City Hotel, 1800 Jefferson Davis Highway, Arlington, Virginia 22202, (703) 486–1111.

FOR FURTHER INFORMATION CONTACT: Jeryne Bryant at the address and phone number listed above.

Authority: Federal Advisory Committee Act, Pub. L. No. 92–463, 5 U.S.C. Appendix 1, and the Office of Management and Budget's Circular No. A–63, Revised.

Dated: October 8, 1999.

Carolita U. Kallaur,

Associate Director for Offshore Minerals Management.

[FR Doc. 99–26888 Filed 10–14–99; 8:45 am]

BILLING CODE 4310–MR–M

INTERNATIONAL TRADE COMMISSION

[Investigations Nos. 701–TA–302 and 731–TA–454 (Reviews)]

Fresh and Chilled Atlantic Salmon From Norway

AGENCY: United States International Trade Commission.

ACTION: Scheduling of expedited five-year reviews concerning the countervailing and antidumping duty orders on fresh and chilled Atlantic salmon from Norway.

SUMMARY: The Commission hereby gives notice of the scheduling of expedited reviews pursuant to section 751(c)(3) of the Tariff Act of 1930 (19 U.S.C. 1675(c)(3)) (the Act) to determine whether revocation of the countervailing and antidumping duty orders on fresh and chilled Atlantic salmon from Norway would be likely to lead to continuation or recurrence of material injury within a reasonably foreseeable time. For further information concerning the conduct of these reviews and rules of general application, consult the Commission's Rules of Practice and Procedure, part 201, subparts A through E (19 CFR part 201), and part 207, subparts A, D, E, and F (19 CFR part 207). Recent amendments to the Rules of Practice and Procedure pertinent to five-year reviews, including the text of subpart F of part 207, are published at 63 F.R. 30599, June 5, 1998, and may be downloaded from the Commission's World Wide Web site at http://www.usitc.gov/rules.htm.

EFFECTIVE DATE: October 1, 1999.

FOR FURTHER INFORMATION CONTACT: Elizabeth Haines (202–205–3200), Office of Investigations, U.S. International Trade Commission, 500 E Street SW, Washington, DC 20436. Hearing-impaired persons can obtain information on this matter by contacting the Commission's TDD terminal on 202–205–1810. Persons with mobility impairments who will need special assistance in gaining access to the Commission should contact the Office of the Secretary at 202–205–2000. General information concerning the Commission may also be obtained by accessing its internet server (http://www.usitc.gov).

SUPPLEMENTARY INFORMATION:

Background

On October 1, 1999, the Commission determined that the domestic interested party group responses to its notice of institution (64 FR 35680, July 1, 1999) were adequate and the respondent interested party group responses were inadequate. The Commission did not find any other circumstances that would warrant conducting full reviews.[1] Accordingly, the Commission determined that it would conduct expedited reviews pursuant to section 751(c)(3) of the Act.

Staff Report

A staff report containing information concerning the subject matter of the reviews will be placed in the nonpublic record on December 6, 1999, and made available to persons on the Administrative Protective Order service list for these reviews. A public version will be issued thereafter, pursuant to section 207.62(d)(4) of the Commission's rules.

Written Submissions

As provided in section 207.62(d) of the Commission's rules, interested parties that are parties to the reviews and that have provided individually adequate responses to the notice of institution,[2] and any party other than an interested party to the reviews may file written comments with the Secretary on what determinations the Commission should reach in the reviews. Comments are due on or before December 9, 1999, and may not contain new factual information. Any person that is neither a party to the five-year reviews nor an interested party may submit a brief written statement (which shall not contain any new factual information) pertinent to the reviews by December 9, 1999. If comments contain business proprietary information (BPI), they must conform with the requirements of sections 201.6, 207.3, and 207.7 of the Commission's rules. The Commission's rules do not authorize filing of submissions with the Secretary by facsimile or electronic means.

In accordance with sections 201.16(c) and 207.3 of the rules, each document filed by a party to the reviews must be served on all other parties to the reviews (as identified by either the public or BPI service list), and a certificate of service must be timely filed. The Secretary will

[1] A record of the Commissioners' votes, the Commission's statement on adequacy, and any individual Commissioner's statements will be available from the Office of the Secretary and at the Commission's web site.

[2] The Commission has found the responses submitted by Atlantic Salmon of Maine, Connors Aquaculture, DE Salmon, Island Aquaculture Corp., Maine Aqua Foods, Maine Coast Nordic, Treat's Island Fisheries, Trumpet Island Salmon Farm, and FAST to be individually adequate. Comments from other interested parties will not be accepted (see 19 CFR 207.62(d)(2)).

not accept a document for filing without a certificate of service.

Determinations

The Commission has determined to exercise its authority to extend the review period by up to 90 days pursuant to 19 U.S.C. § 1675(c)(5)(B).

Authority: These reviews are being conducted under authority of title VII of the Tariff Act of 1930; this notice is published pursuant to section 207.62 of the Commission's rules.

Issued: October 8, 1999.

By order of the Commission.

Donna R. Koehnke,

Secretary.

[FR Doc. 99–26904 Filed 10–14–99; 8:45 am]

BILLING CODE 7020–02–P

INTERNATIONAL TRADE COMMISSION

[Investigation No. 731–TA–457–A–D (Review)]

Heavy Forged Handtools From China

AGENCY: United States International Trade Commission.

ACTION: Notice of Commission determinations to conduct full five-year reviews concerning the antidumping duty orders on heavy forged handtools from China.

SUMMARY: The Commission hereby gives notice that it will proceed with full reviews pursuant to section 751(c)(5) of the Tariff Act of 1930 (19 U.S.C. 1675(c)(5)) to determine whether revocation of the antidumping duty orders on heavy forged handtools from China would be likely to lead to continuation or recurrence of material injury within a reasonably foreseeable time. The Commission has determined to exercise its authority to extend the review period by up to 90 days pursuant to 19 U.S.C. 1675(c)(5)(B); a schedule for the reviews will be established and announced at a later date.

For further information concerning the conduct of these reviews and rules of general application, consult the Commission's Rules of Practice and Procedure, part 201, subparts A through E (19 CFR part 201), and part 207, subparts A, D, E, and F (19 CFR part 207). Recent amendments to the Rules of Practice and Procedure pertinent to five-year reviews, including the text of subpart F of part 207, are published at 63 FR 30599, June 5, 1998, and may be downloaded from the Commission's World Wide Web site at http://www.usitc.gov/rules.htm.

EFFECTIVE DATE: October 1, 1999.

FOR FURTHER INFORMATION CONTACT: Robert Carpenter (202–205–3172), Office of Investigations, U.S. International Trade Commission, 500 E Street SW, Washington, DC 20436. Hearing-impaired persons can obtain information on this matter by contacting the Commission's TDD terminal on 202–205–1810. Persons with mobility impairments who will need special assistance in gaining access to the Commission should contact the Office of the Secretary at 202–205–2000. General information concerning the Commission may also be obtained by accessing its internet server (http://www.usitc.gov).

SUPPLEMENTARY INFORMATION: On October 1, 1999, the Commission determined that it should proceed to full reviews in the subject five-year reviews pursuant to section 751(c)(5) of the Act.

With regard to bars and wedges, hammers and sledges, and picks and mattocks, the Commission found that both the domestic interested party group responses [1] and the respondent interested party group responses [2] to its notice of institution [3] were adequate and voted to conduct full reviews. [4] With regard to axes and adzes, the Commission found that the domestic interested party group response was inadequate [5] and the respondent interested party group response was adequate.[6] The Commission also found that other circumstances warranted conducting a full review. [7]

A record of the Commissioners' votes, the Commission's statement on adequacy, and any individual Commissioner's statements will be available from the Office of the Secretary and at the Commission's web site.

Authority: These reviews are being conducted under authority of title VII of the Tariff Act of 1930; this notice is published pursuant to section 207.62 of the Commission's rules.

Issued: October 8, 1999.

By order of the Commission.

Donna R. Koehnke,

Secretary.

[FR Doc. 99–26909 Filed 10–14–99; 8:45 am]

BILLING CODE 7020–02–P

[1] Chairman Bragg and Commissioner Crawford dissenting.

[2] Chairman Bragg and Commissioner Crawford dissenting.

[3] The notice of institution for the subject reviews was published in the **Federal Register** on July 1, 1999 (64 FR 35682).

[4] Chairman Bragg and Commissioner Crawford dissenting.

[5] Commissioner Askey dissenting.

[6] Chairman Bragg and Commissioner Crawford dissenting.

[7] Chairman Bragg and Commissioner Crawford dissenting.

INTERNATIONAL TRADE COMMISSION

[Investigation No. 731–TA–459 (Review)]

Polyethylene Terephthalate (PET) Film From Korea

AGENCY: United States International Trade Commission.

ACTION: Scheduling of an expedited five-year review concerning the antidumping duty order on polyethylene terephthalate (PET) film from Korea.

SUMMARY: The Commission hereby gives notice of the scheduling of an expedited review pursuant to section 751(c)(3) of the Tariff Act of 1930 (19 U.S.C. 1675(c)(3)) (the Act) to determine whether revocation of the antidumping duty order on polyethylene terephthalate (PET) film from Korea would be likely to lead to continuation or recurrence of material injury within a reasonably foreseeable time. For further information concerning the conduct of this review and rules of general application, consult the Commission's Rules of Practice and Procedure, part 201, subparts A through E (19 CFR part 201), and part 207, subparts A, D, E, and F (19 CFR part 207). Recent amendments to the Rules of Practice and Procedure pertinent to five-year reviews, including the text of subpart F of part 207, are published at 63 FR 30599, June 5, 1998, and may be downloaded from the Commission's World Wide Web site at http://www.usitc.gov/rules.htm.

EFFECTIVE DATE: October 1, 1999.

FOR FURTHER INFORMATION CONTACT: Mary Messer (202–205–3193), Office of Investigations, U.S. International Trade Commission, 500 E Street SW, Washington, DC 20436. Hearing-impaired persons can obtain information on this matter by contacting the Commission's TDD terminal on 202–205–1810. Persons with mobility impairments who will need special assistance in gaining access to the Commission should contact the Office of the Secretary at 202–205–2000. General information concerning the Commission may also be obtained by accessing its internet server (http://www.usitc.gov).

SUPPLEMENTARY INFORMATION:

Background

On October 1, 1999, the Commission determined that the domestic interested party group response to its notice of institution (64 FR 35685, July 1, 1999) was adequate and the respondent interested party group response was inadequate. The Commission did not find any other circumstances that would warrant conducting a full review.[1] Accordingly, the Commission determined that it would conduct an expedited review pursuant to section 751(c)(3) of the Act.

Staff Report

A staff report containing information concerning the subject matter of the review will be placed in the nonpublic record on December 8, 1999, and made available to persons on the Administrative Protective Order service list for this review. A public version will be issued thereafter, pursuant to section 207.62(d)(4) of the Commission's rules.

Written Submissions

As provided in section 207.62(d) of the Commission's rules, interested parties that are parties to the review and that have provided individually adequate responses to the notice of institution,[2] and any party other than an interested party to the review may file written comments with the Secretary on what determination the Commission should reach in the review. Comments are due on or before December 13, 1999, and may not contain new factual information. Any person that is neither a party to the five-year review nor an interested party may submit a brief written statement (which shall not contain any new factual information) pertinent to the review by December 13, 1999. If comments contain business proprietary information (BPI), they must conform with the requirements of sections 201.6, 207.3, and 207.7 of the Commission's rules. The Commission's rules do not authorize filing of submissions with the Secretary by facsimile or electronic means.

In accordance with sections 201.16(c) and 207.3 of the rules, each document filed by a party to the review must be served on all other parties to the review (as identified by either the public or BPI service list), and a certificate of service must be timely filed. The Secretary will not accept a document for filing without a certificate of service.

Determination

The Commission has determined to exercise its authority to extend the review period by up to 90 days pursuant to 19 U.S.C. § 1675(c)(5)(B).

Authority: This review is being conducted under authority of title VII of the Tariff Act of 1930; this notice is published pursuant to section 207.62 of the Commission's rules.

Issued: October 8, 1999.

By order of the Commission.

Donna R. Koehnke,

Secretary.

[FR Doc. 99–26906 Filed 10–14–99; 8:45 am]

BILLING CODE 7020–02–P

[1] A record of the Commissioners' votes, the Commission's statement on adequacy, and any individual Commissioner's statements will be available from the Office of the Secretary and at the Commission's web site.

[2] The Commission has found the responses submitted by E.I. DuPont de Nemours & Co. and Mitsubishi Polyester Film, LLC to be individually adequate. Comments from other interested parties will not be accepted (see 19 CFR 207.62(d)(2)).

INTERNATIONAL TRADE COMMISSION

[Investigations Nos. 731–TA–465, 466, and 468 (Reviews)]

Sodium Thiosulfate From China, Germany, and United Kingdom

AGENCY: United States International Trade Commission.

ACTION: Scheduling of expedited five-year reviews concerning the antidumping duty orders on sodium thiosulfate from China, Germany, and United Kingdom.

SUMMARY: The Commission hereby gives notice of the scheduling of expedited reviews pursuant to section 751(c)(3) of the Tariff Act of 1930 (19 U.S.C. 1675(c)(3)) (the Act) to determine whether revocation of the antidumping duty orders on sodium thiosulfate from China, Germany, and United Kingdom would be likely to lead to continuation or recurrence of material injury within a reasonably foreseeable time. For further information concerning the conduct of these reviews and rules of general application, consult the Commission's Rules of Practice and Procedure, part 201, subparts A through E (19 CFR part 201), and part 207, subparts A, D, E, and F (19 CFR part 207). Recent amendments to the Rules of Practice and Procedure pertinent to five-year reviews, including the text of subpart F of part 207, are published at 63 FR 30599, June 5, 1998, and may be downloaded from the Commission's World Wide Web site at http://www.usitc.gov/rules.htm.

EFFECTIVE DATE: October 1, 1999.

FOR FURTHER INFORMATION CONTACT: Debra Baker (202–205–3180), Office of Investigations, U.S. International Trade Commission, 500 E Street SW, Washington, DC 20436. Hearing-impaired persons can obtain information on this matter by contacting the Commission's TDD terminal on 202–205–1810. Persons with mobility impairments who will need special assistance in gaining access to the Commission should contact the Office of the Secretary at 202–205–2000. General information concerning the Commission may also be obtained by accessing its internet server (http://www.usitc.gov).

SUPPLEMENTARY INFORMATION:

Background

On October 1, 1999, the Commission determined that the domestic interested party group responses to its notice of institution (64 FR 35687, July 1, 1999) were adequate[1] and the respondent interested party group responses were inadequate. The Commission did not find any other circumstances that would warrant conducting full reviews.[2] Accordingly, the Commission determined that it would conduct expedited pursuant to section 751(c)(3) of the Act.

Staff Report

A staff report containing information concerning the subject matter of the reviews will be placed in the nonpublic record on November 22, 1999, and made available to persons on the Administrative Protective Order service list for these reviews. A public version will be issued thereafter, pursuant to section 207.62(d)(4) of the Commission's rules.

Written Submissions

As provided in section 207.62(d) of the Commission's rules, interested parties that are parties to the reviews and that have provided individually adequate responses to the notice of institution,[3] and any party other than an interested party to the reviews may file written comments with the Secretary on what determinations the Commission should reach in the reviews. Comments are due on or before November 29, 1999, and may not contain new factual information. Any person that is neither a party to the five-year reviews nor an interested party may submit a brief

[1] Commissioner Crawford dissenting.

[2] A record of the Commissioners' votes, the Commission's statement on adequacy, and any individual Commissioner's statements will be available from the Office of the Secretary and at the Commission's web site.

[3] The Commission has found the response submitted by Calabrian Corp. to be individually adequate. Comments from other interested parties will not be accepted (see 19 CFR 207.62(d)(2)).

written statement (which shall not contain any new factual information) pertinent to the reviews by November 29, 1999. If comments contain business proprietary information (BPI), they must conform with the requirements of sections 201.6, 207.3, and 207.7 of the Commission's rules. The Commission's rules do not authorize filing of submissions with the Secretary by facsimile or electronic means.

In accordance with sections 201.16(c) and 207.3 of the rules, each document filed by a party to the reviews must be served on all other parties to the reviews (as identified by either the public or BPI service list), and a certificate of service must be timely filed. The Secretary will not accept a document for filing without a certificate of service.

Determinations

The Commission has determined to exercise its authority to extend the review period by up to 90 days pursuant to 19 U.S.C. 1675(c)(5)(B).

Authority: These reviews are being conducted under authority of title VII of the Tariff Act of 1930; this notice is published pursuant to section 207.62 of the Commission's rules.

Issued: October 8, 1999.

By order of the Commission.

Donna R. Koehnke,

Secretary.

[FR Doc. 99–26905 Filed 10–14–99; 8:45 am]

BILLING CODE 7020–02–P

INTERNATIONAL TRADE COMMISSION

[Investigation No. 731–TA–464 (Review)]

Sparklers From China

AGENCY: United States International Trade Commission.

ACTION: Notice of Commission determination to conduct a full five-year review concerning the antidumping duty order on sparklers from China.

SUMMARY: The Commission hereby gives notice that it will proceed with a full review pursuant to section 751(c)(5) of the Tariff Act of 1930 (19 U.S.C. 1675(c)(5)) to determine whether revocation of the antidumping duty order on sparklers from China would be likely to lead to continuation or recurrence of material injury within a reasonably foreseeable time. The Commission has determined to exercise its authority to extend the review period by up to 90 days pursuant to 19 U.S.C. 1675(c)(5)(B); a schedule for the review will be established and announced at a later date.

For further information concerning the conduct of this review and rules of general application, consult the Commission's Rules of Practice and Procedure, part 201, subparts A through E (19 CFR part 201), and part 207, subparts A, D, E, and F (19 CFR part 207). Recent amendments to the Rules of Practice and Procedure pertinent to five-year reviews, including the text of subpart F of part 207, are published at 63 FR 30599, June 5, 1998, and may be downloaded from the Commission's World Wide Web site at http://www.usitc.gov/rules.htm.

EFFECTIVE DATE: October 1, 1999.

FOR FURTHER INFORMATION CONTACT: George Deyman (202–205–3197), Office of Investigations, U.S. International Trade Commission, 500 E Street SW, Washington, DC 20436. Hearing-impaired persons can obtain information on this matter by contacting the Commission's TDD terminal on 202–205–1810. Persons with mobility impairments who will need special assistance in gaining access to the Commission should contact the Office of the Secretary at 202–205–2000. General information concerning the Commission may also be obtained by accessing its internet server (http://www.usitc.gov).

SUPPLEMENTARY INFORMATION: On October 1, 1999, the Commission determined that it should proceed to a full review in the subject five-year review pursuant to section 751(c)(5) of the Act. The Commission found that the domestic interested party group response to its notice of institution (64 FR 35689, July 1, 1999) was adequate and that the respondent interested party group response was inadequate. The Commission also found that other circumstances warranted conducting a full review.[1]

A record of the Commissioners' votes, the Commission's statement on adequacy, and any individual Commissioner's statements will be available from the Office of the Secretary and at the Commission's web site.

Authority: This review is being conducted under authority of title VII of the Tariff Act of 1930; this notice is published pursuant to section 207.62 of the Commission's rules.

By order of the Commission.

Issued: October 8, 1999.

Donna R. Koehnke,

Secretary.

[FR Doc. 99–26907 Filed 10–14–99; 8:45 am]

BILLING CODE 7020–02–P

[1] Chairman Bragg and Commissioner Crawford dissenting.

INTERNATIONAL TRADE COMMISSION

[Investigations Nos. 731–TA–376, 563, and 564 (Reviews)]

Stainless Steel Butt-Weld Pipe Fittings From Japan, Korea, and Taiwan

AGENCY: United States International Trade Commission.

ACTION: Scheduling of expedited five-year reviews concerning the antidumping duty orders on stainless steel butt-weld pipe fittings from Japan, Korea, and Taiwan.

SUMMARY: The Commission hereby gives notice of the scheduling of expedited reviews pursuant to section 751(c)(3) of the Tariff Act of 1930 (19 U.S.C. 1675(c)(3)) (the Act) to determine whether revocation of the antidumping duty orders on stainless steel butt-weld pipe fittings from Japan, Korea, and Taiwan would be likely to lead to continuation or recurrence of material injury within a reasonably foreseeable time. For further information concerning the conduct of these reviews and rules of general application, consult the Commission's Rules of Practice and Procedure, part 201, subparts A through E (19 CFR part 201), and part 207, subparts A, D, E, and F (19 CFR part 207). Recent amendments to the Rules of Practice and Procedure pertinent to five-year reviews, including the text of subpart F of part 207, are published at 63 F.R. 30599, June 5, 1998, and may be downloaded from the Commission's World Wide Web site at http://www.usitc.gov/rules.htm.

EFFECTIVE DATE: October 1, 1999.

FOR FURTHER INFORMATION CONTACT: Debra Baker (202–205–3180), Office of Investigations, U.S. International Trade Commission, 500 E Street SW, Washington, DC 20436. Hearing-impaired persons can obtain information on this matter by contacting the Commission's TDD terminal on 202–205–1810. Persons with mobility impairments who will need special assistance in gaining access to the Commission should contact the Office of the Secretary at 202–205–2000. General information concerning the Commission may also be obtained by accessing its internet server (http://www.usitc.gov).

SUPPLEMENTARY INFORMATION:

Background

On October 1, 1999, the Commission determined that the domestic interested party group responses to its notice of institution (64 FR 35691, July 1, 1999) were adequate and the respondent interested party group responses were inadequate. The Commission did not find any other circumstances that would warrant conducting full reviews.[1] Accordingly, the Commission determined that it would conduct expedited reviews pursuant to section 751(c)(3) of the Act.

Staff Report

A staff report containing information concerning the subject matter of the reviews will be placed in the nonpublic record on December 28, 1999, and made available to persons on the Administrative Protective Order service list for these reviews. A public version will be issued thereafter, pursuant to section 207.62(d)(4) of the Commission's rules.

Written Submissions

As provided in section 207.62(d) of the Commission's rules, interested parties that are parties to the reviews and that have provided individually adequate responses to the notice of institution,[2] and any party other than an interested party to the reviews may file written comments with the Secretary on what determination the Commission should reach in the reviews. Comments are due on or before January 3, 2000, and may not contain new factual information. Any person that is neither a party to the five-year reviews nor an interested party may submit a brief written statement (which shall not contain any new factual information) pertinent to the reviews by January 3, 2000. If comments contain business proprietary information (BPI), they must conform with the requirements of sections 201.6, 207.3, and 207.7 of the Commission's rules. The Commission's rules do not authorize filing of submissions with the Secretary by facsimile or electronic means.

In accordance with sections 201.16(c) and 207.3 of the rules, each document filed by a party to the reviews must be served on all other parties to the reviews (as identified by either the public or BPI service list), and a certificate of service must be timely filed. The Secretary will not accept a document for filing without a certificate of service.

Determinations

The Commission has determined to exercise its authority to extend the review period by up to 90 days pursuant to 19 U.S.C. § 1675(c)(5)(B).

Authority: These reviews are being conducted under authority of title VII of the Tariff Act of 1930; this notice is published pursuant to section 207.62 of the Commission's rules.

Issued: October 8, 1999.

By order of the Commission.

Donna R. Koehnke,

Secretary.

[FR Doc. 99–26903 Filed 10–14–99; 8:45 am]

BILLING CODE 7020–02–P

[1] A record of the Commissioners' votes, the Commission's statement on adequacy, and any individual Commissioner's statements will be available from the Office of the Secretary and at the Commission's web site.

[2] The Commission has found the responses submitted by Alloy Piping Products, Inc.; Flowline Division of Markovitz Enterprises, Inc.; Gerlin, Inc.; and Taylor Forge Stainless, Inc. to be individually adequate. Comments from other interested parties will not be accepted (see 19 CFR 207.62(d)(2)).

INTERNATIONAL TRADE COMMISSION

[Investigations Nos. 731–TA–540–541 (Review)]

Certain Stainless Steel Pipe From Korea and Taiwan

AGENCY: United States International Trade Commission.

ACTION: Notice of Commission determinations to conduct full five-year reviews concerning the antidumping duty orders on certain stainless steel pipe from Korea and Taiwan.

SUMMARY: The Commission hereby gives notice that it will proceed with full reviews pursuant to section 751(c)(5) of the Tariff Act of 1930 (19 U.S.C. 1675(c)(5)) to determine whether revocation of the antidumping duty orders on certain stainless steel pipe from Korea and Taiwan would be likely to lead to continuation or recurrence of material injury within a reasonably foreseeable time. The Commission has determined to exercise its authority to extend the review period by up to 90 days pursuant to 19 U.S.C. 1675(c)(5)(B); a schedule for the reviews will be established and announced at a later date.

For further information concerning the conduct of these reviews and rules of general application, consult the Commission's Rules of Practice and Procedure, part 201, subparts A through E (19 CFR part 201), and part 207, subparts A, D, E, and F (19 CFR part 207). Recent amendments to the Rules of Practice and Procedure pertinent to five-year reviews, including the text of subpart F of part 207, are published at 63 FR 30599, June 5, 1998, and may be downloaded from the Commission's World Wide Web site at http://www.usitc.gov/rules.htm.

EFFECTIVE DATE: October 1, 1999.

FOR FURTHER INFORMATION CONTACT: Bonnie Noreen (202–205–3167), Office of Investigations, U.S. International Trade Commission, 500 E Street SW, Washington, DC 20436. Hearing-impaired persons can obtain information on this matter by contacting the Commission's TDD terminal on 202–205–1810. Persons with mobility impairments who will need special assistance in gaining access to the Commission should contact the Office of the Secretary at 202–205–2000. General information concerning the Commission may also be obtained by accessing its internet server (http://www.usitc.gov).

SUPPLEMENTARY INFORMATION: On October 1, 1999, the Commission determined that it should proceed to full reviews in the subject five-year reviews pursuant to section 751(c)(5) of the Act. The Commission found that the domestic interested party group responses to its notice of institution (64 FR 35694, July 1, 1999) were adequate with respect to both reviews,[1] and that the respondent interested party group response was adequate with respect to Korea but inadequate with respect to Taiwan. The Commission also found that other circumstances warranted conducting a full review with respect to Taiwan.[2]

A record of the Commissioners' votes, the Commission's statement on adequacy, and any individual Commissioner's statements will be available from the Office of the Secretary and at the Commission's web site.

Authority: These reviews are being conducted under authority of title VII of the Tariff Act of 1930; this notice is published pursuant to section 207.62 of the Commission's rules.

Issued: October 8, 1999.

By order of the Commission.

Donna R. Koehnke,

Secretary.

[FR Doc. 99–26910 Filed 10–14–99; 8:45 am]

BILLING CODE 7020–02–P

[1] Commissioner Crawford dissenting.

[2] Commissioner Crawford dissenting. Commissioner Crawford also found that no other circumstances warranted conducting a full review with respect to Korea.

INTERNATIONAL TRADE COMMISSION

[Investigations Nos. 701–TA–178 (Review) and 731–TA–636–638 (Review)]

Stainless Steel Wire Rod From Brazil, France, India, and Spain

AGENCY: United States International Trade Commission.

ACTION: Notice of Commission determinations to conduct full five-year reviews concerning the countervailing duty and antidumping duty orders on stainless steel wire rod from Brazil, France, India, and Spain.

SUMMARY: The Commission hereby gives notice that it will proceed with full reviews pursuant to section 751(c)(5) of the Tariff Act of 1930 (19 U.S.C. 1675(c)(5)) to determine whether revocation of the antidumping duty orders on stainless steel wire rod from Brazil, France, India, and Spain would be likely to lead to continuation or recurrence of material injury within a reasonably foreseeable time. The Commission has determined to exercise its authority to extend the review period by up to 90 days pursuant to 19 U.S.C. 1675(c)(5)(B); a schedule for the reviews will be established and announced at a later date.

For further information concerning the conduct of these reviews and rules of general application, consult the Commission's Rules of Practice and Procedure, part 201, subparts A through E (19 CFR part 201), and part 207, subparts A, D, E, and F (19 CFR part 207). Recent amendments to the Rules of Practice and Procedure pertinent to five-year reviews, including the text of subpart F of part 207, are published at 63 FR 30599, June 5, 1998, and may be downloaded from the Commission's World Wide Web site at http://www.usitc.gov/rules.htm.

EFFECTIVE DATE: October 1, 1999.

FOR FURTHER INFORMATION CONTACT: Bonnie Noreen (202–205–3167), Office of Investigations, U.S. International Trade Commission, 500 E Street SW, Washington, DC 20436. Hearing-impaired persons can obtain information on this matter by contacting the Commission's TDD terminal on 202–205–1810. Persons with mobility impairments who will need special assistance in gaining access to the Commission should contact the Office of the Secretary at 202–205–2000. General information concerning the Commission may also be obtained by accessing its internet server (http://www.usitc.gov).

SUPPLEMENTARY INFORMATION: On October 1, 1999, the Commission determined that it should proceed to full reviews in the subject five-year reviews pursuant to section 751(c)(5) of the Act. The Commission found that the domestic interested party group responses to its notice of institution (64 FR 35697, July 1, 1999) were adequate with respect to all the reviews, and that the respondent interested party group responses were adequate with respect to France, but inadequate with respect to Brazil, India, and Spain. The Commission also found that other circumstances warranted conducting full reviews with respect to Brazil, India, and Spain.[1]

A record of the Commissioners' votes, the Commission's statement on adequacy, and any individual Commissioner's statements will be available from the Office of the Secretary and at the Commission's web site.

Authority: These reviews are being conducted under authority of title VII of the Tariff Act of 1930; this notice is published pursuant to section 207.62 of the Commission's rules.

Issued: October 8, 1999.

By order of the Commission.

Donna R. Koehnke,

Secretary.

[FR Doc. 99–26908 Filed 10–14–99; 8:45 am]

BILLING CODE 7020–02–P

[1] Commissioner Crawford dissenting.

DEPARTMENT OF JUSTICE

Drug Enforcement Administration

[Docket No. 97–22]

James C. LaJevic, D.M.D.; Revocation of Registration

On June 5, 1997, the Deputy Assistant Administrator, Office of Diversion Control, Drug Enforcement Administration (DEA), issued an Order to Show Cause to James C. LaJevic, D.M.D. (Respondent) of Pittsburgh, Pennsylvania, notifying him of an opportunity to show cause as to why DEA should not revoke his DEA Certificate of Registration, BL4788064, pursuant to 21 U.S.C. 824(a)(1), and deny any pending applications for renewal of such registration pursuant to 21 U.S.C. 823(f). The Order to Show Cause alleged that Respondent materially falsified two applications for registration with DEA.

Respondent requested a hearing on the issues raised by the Order to Show Cause, and the matter was docketed before Administrative Law Judge Mary Ellen Bittner. During prehearing procedures, the issue was framed to include not only the material falsification of applications as a basis for the revocation of Respondent's DEA registration, but also whether Respondent's continued registration would be inconsistent with the public interest pursuant to 21 U.S.C. 823(f) and 824(a)(4). Following prehearing procedures, a hearing was held in Pittsburgh, Pennsylvania on March 10, 1998, and in Arlington, Virginia on August 18, 1998. At the hearing, both parties called witnesses to testify and the Government introduced documentary evidence. After the hearing, both parties submitted proposed findings of fact, conclusions of law and argument.

On May 6, 1999, Judge Bittner issued her Opinion and Recommended Ruling, Findings of Fact, Conclusions of Law and Decision, recommending that Respondent's DEA Certificate of Registration be revoked, and any pending applications be denied. On June 18, 1999, Respondent filed exceptions to Judge Bittner's opinion and recommended decision, and on July 9, 1999, the Government filed its response to Respondent's exceptions. Thereafter, on July 15, 1999, Judge Bittner transmitted the record of these proceedings to the Deputy Administrator.

The Deputy Administrator has considered the record in its entirety, and pursuant to 21 CFR 1316.67 hereby issues his final order based upon findings of fact and conclusions of law as hereinafter set forth. The Deputy Administrator adopts, in full, the Opinion and Recommended Ruling, Findings of Fact, Conclusions of Law and Decision of the Administrative Law Judge. His adoption is in no manner diminished by any recitation of facts, issues and conclusions herein, or of any failure to mention a matter of fact or law.

The Deputy Administrator finds that Respondent has practiced dentistry in Pittsburgh, Pennsylvania since 1976. While Respondent now lives in Boulder City, Nevada, he still practices dentistry in Pittsburgh approximately seven to ten days per month.

On September 10, 1990, the Commonwealth of Pennsylvania, Department of State, Bureau of Professional and Occupational Affairs, State Board of Dentistry (Dental Board) issued an Order suspending Respondent's state dental license for a period of three months commencing on October 12, 1990. The Dental Board's action was based on Respondent's 1988 conviction in the United States District

Court for the Western District of Pennsylvania for income tax evasion.

On April 1, 1991, Respondent submitted an application for the renewal of DEA Certificate of Registration AL6222296, which was initially issued to Respondent in November 1974. Respondent answered ''No'' to the question on the application, hereinafter referred to as the liability question, which asked, ''Has the applicant ever been convicted of a crime in connection with controlled substances under State or Federal law, or ever surrendered or had a Federal controlled substance registration revoked, suspended, restricted or denied, or ever had a State professional license or controlled substance registration revoked, suspended, denied, restricted or placed on probation?'' Respondent's registration was renewed.

Effective March 9, 1994, following a formal hearing, the Dental Board issued an Adjudication and Order finding, among other things, that Respondent (1) failed on two occasions to responsibly administer the controlled substance Halcion, (2) failed to keep thorough and adequate records of the administration of controlled substances in his office, (3) failed to take into account the medical condition of his patients when performing dental procedures, (4) failed to provide patients with adequate information regarding treatment and controlled substances, and (5) violated the standards of professional conduct by self-prescribing Hydrodiuril, a hypertensive drug, for twelve years. The Dental Board suspended Respondent's dental license for two years beginning on April 8, 1994, but provided that one year of the suspension was to be active and the remaining year of the suspension was stayed and Respondent was paced on probation. In addition, Respondent was fined $1,000.00.

Upon learning of Respondent's suspension, a DEA investigator sent Respondent a letter dated May 13, 1994, providing Respondent with the opportunity to voluntarily surrender his DEA Certificate of Registration since he was not currently authorized to handle controlled substances in Pennsylvania. DEA did not receive a response to this letter, but the investigator did not pursue further administrative action against Respondent's registration, since the registration expired on March 31, 1994, with no renewal application being submitted.

In February 1996, an agent with the Pennsylvania Office of the Attorney General, Bureau of Narcotics Investigation (BNI), interviewed several local pharmacists to determine whether Respondent was issuing controlled substance prescriptions using his expired DEA registration. One pharmacist told the BNI agent that Respondent frequented his pharmacy and had telephoned prescriptions for his personal use for Valium, and for a cough syrup containing Hycodan, both controlled substances. The pharmacist indicated that when he questioned Respondent about the Valium prescription, Respondent indicated that it was for office use only, and the pharmacist noted ''office'' on the prescription. Respondent testified at the hearing that he never told anyone that any presciption was for ''office use,'' and the Hycodan cough syrup was something that he personally used for a cough.

On March 14, 1996, a search warrant was executed at Respondent's office by state agents. During execution of the warrant, Respondent's DEA Certificate of Registration AL6222296 which expired on March 31, 1994, was found in Respondent's desk drawer. Respondent told the BNI agent that he knew that his previous DEA registration had expired since several pharmacists had informed him of this in February 1996, and that he had recently reapplied for a new Certificate of Registration. Respondent offered no explanation as to why he had failed to renew his previous registration, but he indicated that he continued writing controlled substance prescriptions because his patients needed the medication for pain. Respondent also told the BNI agent that he had assumed that his DEA registration was automatically suspended when his state dental license was suspended and believed that when his state dental license was reinstated, so was his DEA registration. When asked about the prescription for personal and office use, Respondent said that he was not familiar with that pharmacy and never wrote prescriptions for personal use.

During the course of the state investigation, the BNI agent found 60 controlled substance prescriptions issued or authorized by Respondent using his expired DEA registration AL6222296.

After learning from several pharmacists that his previous DEA registration had expired, Respondent submitted an application for a new Certificate of Registration. In early March 1996, the Registration Unit at DEA Headquarters received an application for registration from Respondent that was signed but undated. Again Respondent indicated that he had never had his State professional license or controlled substances registration revoked, suspended, denied, restricted, or placed on probation. In reviewing this application, a registration assistant performed a routine computer database background check but misspelled Respondent's name and as a result no adverse action was noted. As a result, DEA issued Respondent DEA Certificate of Registration BL4788064.

The local DEA investigator was surprised when he learned that Respondent had been granted a registration because he had intended to request an Order to Show Cause seeking to deny any application submitted by Respondent. On August 30, 1996, DEA sent Respondent a letter providing him with an opportunity to surrender his new DEA Certificate of Registration. On September 3, 1996, Respondent called the local DEA office to discuss the August 30, 1996 letter. Respondent was told that DEA planned to take action against his new registration based upon the falsification of his March 1996 application for registration. The DEA investigator testified that in response, Respondent explained that he had mistakenly answered ''No'' to the liability question, believing that the question related only to the suspension or probation of his DEA registration, and not his State licensure. Respondent declined to surrender his registration, which resulted in the Order to Show Cause that initiated these proceedings.

At the hearing in this matter, Respondent testified that he wrote controlled substance prescriptions without a valid DEA registration from March 1995 until February 1996, at which point he was told by a pharmacist that his previous DEA registration was no longer valid. Respondent stated that he had practiced dentistry for over 25 years and had never before forgotten to renew his DEA registration. According to Respondent when his dental license was suspended in 1994, state personnel came to his office and removed the plaque with his dental license which had his DEA registration taped to it. The plaque was returned at the end of the year suspension and he resumed practicing.

Respondent also testified that he did not intentionally falsify his DEA applications. He asserted that he had nothing to gain by falsifying the applications and was confused by the liability question. According to Respondent, he simply misread the question and believed that it only pertained to suspensions based upon controlled substance violations.

The Deputy Administrator, in his discretion, may revoke a DEA Certificate of Registration and deny any applications if the registrant ''has

materially falsified any application filed pursuant to or required by this subchapter * * *.'' 21 U.S.C. 824(a)(1). In addition, the Deputy Administrator may also revoke a DEA Certificate of Registration and deny any pending applications for registration ''if he determines that the issuance of such registration would be inconsistent with the public interest.'' 21 U.S.C. 824(a)(4).

In determining the public interest, the Deputy Administrator is to consider the following factors set forth in 21 U.S.C. 823(f):

(1) The recommendation of the appropriate State licensing board or professional disciplinary authority.

(2) The applicant's experience in dispensing, or conducting research with respect to controlled substances.

(3) The applicant's conviction record under Federal or State laws relating to the manufacture, distribution, or dispensing of controlled substances.

(4) Compliance with applicable State, Federal, or local laws relating to controlled substances.

(5) Such other conduct which may threaten the public health and safety.

These factors are to be considered in the disjunctive; the Deputy Administrator may rely on any one or a combination of factors and may give each factor the weight he deems appropriate in determining whether a registration should be revoked or an application for registration be denied. See Henry J. Schwarz, Jr., M.D., 54 FR 16,422 (1989).

First, pursuant to 21 U.S.C. 824(a)(1), a registration may be revoked if the registrant has materially falsified an application for registration. DEA has previously held that in finding that there has been a material falsification of an application, it must be determined that the applicant knew or should have known that the response given to the liability question was false. See, Martha Hernandez, M.D., 62 FR 61,145 (1997), Herbert J. Robinson, M.D., 59 FR 6304 (1994).

It is undisputed that Respondent answered ''No'' to the liability question on both his 1991 renewal application and his 1996 application which asked whether his state medical license had been suspended or placed on probation. Respondent admitted that he knew that his state medical license had been suspended in 1990 and had been suspended and then placed on probation in 1994, but he testified that he did know that his answers to the liability questions were false because the questions were confusing and he thought that the questions only dealt with disciplinary actions relating to the improper handling of controlled substances.

The Deputy Administrator concurs with Judge Bittner's conclusion that Respondent materially falsified his applications of registration. DEA has previously held that it is the registrant's ''responsibility to carefully read the question and to honestly answer all parts of the question.'' See Samuel Arnold, D.D.S., 63 FR 8687 (1998); Martha Hernandez, M.D., 62 FR 61,145 (1997). Therefore, grounds exist to revoke Respondent's registration pursuant to 21 U.S.C. 824(a)(1).

Respondent has consistently argued that he did not intentionally answer the liability questions incorrectly. The Deputy Administrator notes that if evidence existed that indicated that Respondent intentionally falsified his applications, criminal charges could have been brought against Respondent. But as has been previously noted, negligence and carelessness in completing an application for registration could be a sufficient reason to revoke a registration. See Id. Clearly, Respondent was negligent and careless in completing his applications, and Judge Bittner did not find Respondent's explanations persuasive.

In his exceptions to Judge Bittner's opinion, Respondent argued for the first time that he misread the question believing that it asked whether there had ever been any disciplinary action against ''his State professional license for controlled substance registration,'' rather than ''his State professional license or controlled substance registration.'' In its response to Respondent's exceptions, the Government argued that Respondent's ''disingenuous belated argument reinforces (Judge Bittner's) conclusion that Respondent was not candid.'' The Deputy Administrator agrees with the Government. Respondent seems to be grasping for any explanation as to why he falsified his applications for registration. Had this truly been the reason for Respondent's answer to the liability questions, Respondent should have raised this at the hearing rather than for the first time in his exceptions.

Next, the Deputy Administrator must consider whether Respondent's continued registration would be inconsistent with the public interest. As to factor one, it is undisputed that Respondent's dental license was suspended by the state Dental Board in 1990, as suspended and then placed on probation in 1994. The Deputy Administrator notes that some of the reasons for the second suspension related to Respondent's handling of controlled substances in his dental practice. But it is also undisputed that Respondent has had an unrestricted license to handle controlled substances in Pennsylvania since 1996. However, as Judge Bittner stated, ''inasmuch as State licensure is a necessary but not sufficient condition for a DEA registration, * * * this factor is not determinative.''

As to factors two and four, Respondent's experience in handling controlled substances and his compliance with applicable laws relating to controlled substances, the Deputy Administrator has considered these factors together. There is no question that Respondent has practiced dentistry for 25 years. But, it is also undisputed that between April 1, 1994 and March 15, 1996, Respondent issued 60 controlled substance prescriptions using an expired DEA registration, clearly a violation of 21 U.S.C. 843(a)(2). Respondent attempted to justify this conduct by stating that he did not realize that his previous DEA registration had expired until he was so advised by a local pharmacist. But, the Deputy Administrator agrees with Judge Bittner that, ''[t]here is simply no excuse for Respondent's failure to be aware of the status of his DEA registration.'' Respondent knew that his DEA registration needed to be renewed on a regular basis since he had consistently renewed his registration in the past. His failure to do so on this occasion is another example of his negligent and careless behavior. The record also supports a conclusion that Respondent wrote a prescription for diazepam for office use in violation of 21 CFR 1306.04(b).

Regarding factor three, there is no evidence that Respondent has ever been convicted under State or Federal laws relating to controlled substances.

As to factor five, the Deputy Administrator finds that Respondent's inconsistent explanations for the falsification of his 1991 and 1996 applications for registration demonstrate Respondent's lack of candor.

Judge Bittner concluded that Respondent's DEA registration should be revoked based upon the material falsification of his applications and that his continued registration would be inconsistent with the public interest. In his exceptions to Judge Bittner's opinion, Respondent argued that revocation would be too harsh a sanction in light of his ''administrative errors.''

The Deputy Administrator agrees with Judge Bittner. Revocation is warranted in this case. Not only did Respondent materially falsify two applications for registration, but he also authorized 60 controlled substance prescriptions using an expired DEA registration. At the very

least, this lack of attention to detail demonstrates Respondent's negligence and carelessness in his compliance with controlled substance laws and regulations. Therefore, the Deputy Administrator finds that Respondent's DEA Certificate of Registration must be revoked based upon the material falsification of his applications for registration and based upon a finding that Respondent's continued registration would be inconsistent with the public interest.

Accordingly, the Deputy Administrator of the Drug Enforcement Administration, pursuant to the authority vested in him by 21 U.S.C. 823 and 824 and 28 CFR 0.100(b) and 0.104, hereby orders that DEA Certificate of Registration BL4788064, issued to James C. LaJevic, D.M.D., be, and it hereby is, revoked. The Deputy Administrator further orders that any pending applications for registration, be, and they hereby are, denied. This order is effective November 15, 1999.

Dated: October 7, 1999.

Donnie R. Marshall,

Deputy Administrator.

[FR Doc. 99–27004 Filed 10–14–99; 8:45 am]

BILLING CODE 4410–09–M

DEPARTMENT OF JUSTICE

Drug Enforcement Administration

[Docket No. 98–14]

Bernard C. Musselman, M.D.; Revocation of Registration

On February 10, 1998, the Deputy Assistant Administrator, Office of Diversion Control, Drug Enforcement Administration (DEA), issued an Order to Show Cause to Bernard C. Musselman, M.D. of Ogdensburg, New York, notifying him of an opportunity to show cause as to why DEA should not revoke his DEA Certificate of Registration BM5006540, pursuant to 21 U.S.C. 824(a)(1), and deny any pending applications for renewal of such registration as a practitioner under 21 U.S.C. 823(f), on the grounds that his continued registration would be inconsistent with the public interest.

Respondent, through counsel, requested a hearing on the issues raised by the Order to Show Cause, and the matter was docketed before Administrative Law Judge Mary Ellen Bittner. During prehearing procedures, the cited statutory authority for the proposed action was changed from 21 U.S.C. 824(a)(1) to 21 U.S.C. 824(a)(4). Following prehearing procedures, a hearing was held in Arlington, Virginia on December 9, 1998. At the hearing, both parties called witnesses to testify and introduced documentary evidence. After the hearing, both parties submitted proposed findings of fact, conclusions of law and argument.

On June 16, 1999, Judge Bittner issued her Opinion and Recommended Ruling, Findings of Fact, Conclusions of Law and Decision, recommending that Respondent's DEA Certificate of Registration be revoked, and any pending applications for registration be denied. Neither party filed exceptions to Judge Bittner's opinion and recommended decision, and on July 19, 1999, Judge Bittner transmitted the record of these proceedings to the Deputy Administrator.

The Deputy Administrator has considered the record in its entirety, and pursuant to 21 CFR 1316.67 hereby issues his final order based upon findings of fact and conclusions of law as hereinafter set forth. The Deputy Administrator adopts, except as specifically noted below, the Opinion and Recommended Ruling, findings of Fact, Conclusions of Law and Decision of the Administrative Law Judge. His adoption is in no manner diminished by any recitation of facts, issues and conclusions herein, or of any failure to mention a matter of fact or law.

The Deputy Administrator finds that Respondent entered the United States Navy in 1958 during his senior year in medical school, graduated from medical school in 1959, and then completed a one-year internship. After leaving the Navy in 1963, he practiced general medicine in Ogdensburg, New York for three years, and then completed a two-year residency in pediatrics at the Mayo Clinic. Thereafter, Respondent returned to Ogdensburg and practiced pediatric medicine until he retired in 1990. While in practice in Ogdensburg, Respondent maintained admitting privileges at a local hospital.

Respondent was issued a provisional registration to handle controlled substances, AM3456680, effective May 1, 1971 through January 31, 1972. It is undisputed that Respondent prescribed controlled substances throughout his medical career, but he was not registered with DEA or its predecessor agencies to handle controlled substances from February 1, 1972 until April 11, 1990. According to Respondent, it was his understanding that a physician only needed a Federal narcotics registration if he was dispensing controlled substances. Respondent testified that he never obtained a DEA registration because he only prescribed controlled substances in his pediatric practice, and did not dispense them. Respondent further testified that he never received a notice that he needed to renew his controlled substance registration. According to Respondent, he even consulted with an attorney who was also his Congressman who told Respondent that he only needed a Federal controlled substance registration if he was dispensing controlled substances. Yet it is also undisputed that during at least most of this period Respondent's prescription pads were preprinted with DEA registration number AM3456680.

In 1987, the local hospital was conducting a review of the medical staff's credentials and discovered that it did not have a copy of Respondent's DEA Certificate of Registration on file. In October 1987, the hospital administrator wrote to Respondent requesting a copy of his DEA registration. Respondent replied that he did not need a DEA registration because he only prescribed controlled substances. The hospital staff verified with DEA that Respondent did not have a DEA registration, but through an oversight, no action was taken by the hospital at that time.

In March 1990, the issue of Respondent's DEA registration was raised again at the hospital. Once again, the hospital staff verified with DEA that Respondent did not have a DEA Certificate of Registration and also that AM3456680 was a non-existent DEA number.

At some point, the hospital administrator obtained a copy of a form memorandum that was sent to Respondent by the hospital's director of pharmacy in January 1989 or 1990 asking for Respondent's signature and DEA registration number. Respondent signed the memorandum and listed his DEA registration as AM3456680. Respondent testified that signing the form was ''an error because I didn't know what I was doing. That's my old BND (sic) number that had been on file there for years. I thought that was the number they wanted.''

On March 26, 1990, the hospital administrator sent a memorandum to the hospital's director of pharmacy, with copies to various other hospital personnel including Respondent, advising that effective immediately, Respondent was not able to write any controlled substance prescriptions because he did not have a DEA registration. After learning of the memorandum, Respondent had a discussion with the hospital administrator. Respondent was told that he was not allowed to write orders for controlled substances, and that if he needed to order controlled substances

he would have to have a consulting physician write the order for him.

Respondent contacted the local DEA office in early April 1990 to obtain an application for registration. he was issued DEA Certificate of Registration BM2219673 on April 11, 1990.

On April 1 or 2, 1990, the hospital's medical director admitted a patient to the hospital who had had a seizure and gave her phenobarbital, a controlled substance. The medical director asked Respondent to take over the patient's care. According to Respondent he expressed concern over treating the patient since he could not write controlled substance orders. On the morning of April 2, 1990, Respondent met with the medical director, the floor nurse and the patient's mother to discus the patient's care. According to Respondent, the medical director agreed to countersign orders for phenobarbital for the patient. Respondent believed that this meant that the medical director would be taking responsibility for the order. Respondent introduced into evidence at the hearing an affidavit from the patient's mother who indicated that the medical director did agree to countersign orders for phenobarbital for her daughter. However, the hospital administrator testified that Respondent wrote the order for phenobarbital that morning and that it was the hospital administrator who asked the medical director to countersign the order.

As a result of this order for phenobarbital, the hospital's executive committee summarily suspended Respondent's hospital privileges because he did not comply with the hospital's directive to not write orders for controlled substances. Respondent appealed the suspension to a fair hearing committee which met on May 12, 1990. At this hearing, the hospital administrator testified that on April 2, 1990, he received a telephone call from the medical director advising that the pharmacist on duty had told the medical director that Respondent had written an order for phenobarbital for a patient. According to the hospital administrator, the medical director did not indicate that he had agreed with Respondent to countersign such an order.

Respondent testified before the fair hearing committee regarding the meeting he had with the medical director and the patient's mother on April 2, 1990 and regarding the medical director's agreement to countersign any order for phenobarbital for the patient. Respondent further testified before the fair hearing committee that he was oblivious to the DEA number on his prescription pads and that ''the reason we hire a CEO of a hospital is to keep abreast of the changes of the rules and regulations of the health department. And when he discovered the rules have changed, he ought to tell me. And when he told me, I acted. * * *''

The fair hearing committee was troubled that no DEA representative nor the hospital's medical director testified. The committee recommended that Respondent's privileges be reinstated once he submits a valid DEA Certificate of Registration to the hospital, he revises his prescription pads to include a valid DEA registration number, and he obtains continuing medical education credits on hospital credentialing and the prescribing of controlled substances.

Notwithstanding the fair hearing committee's recommendation, the hospital's Board of Directors said that Respondent's privileges would not be reinstated at that time but that he could reapply the following spring. Respondent felt that he could not practice medicine without hospital privileges so he decided to retire.

After being advised by a state investigator that Respondent had been issuing controlled substance prescriptions without a valid DEA registration, DEA investigators went to three local pharmacies on April 26, 1990 and retrieved a total of 38 controlled substanced prescriptions that Respondent had issued between 1986 and March 1990 with DEA number AM 3456680 on the prescriptions. No action was taken by DEA at that time.

In March 1991, DEA learned that Respondent had retired from the practice of medicine. In August 1991, two DEA investigators went to see if Respondent would surrender his DEA registration since he was no longer practicing medicine. Respondent signed the voluntary surrender form, and checked the box on the form which stated that ''[i[n view of my desire to terminate handling of controlled substances listed in schedule(s) ____ (schedules 2, 2N, 3, 3N, 4, and 5 were handwritten); I hereby voluntary surrender my Drug Enforcement Administration Certificate of Registration. * * *'' According to both Respondent and the investigator who testified at the hearing, this was a cordial meeting.

In March 1992, the New York Bureau of Professional Medical Conduct issued a statement of charges alleging 11 specifications of professional misconduct. Respondent. filed an application to surrender his license to practice medicine on grounds that he did not contest the specifications, but also stating that nothing in his application was to be construed as an admission of any act of misconduct. Respondent agreed not to apply for restoration of his medical license for at least one year. Respondent's application was granted effective March 25, 1992. On June 14, 1996, Respondent's medical license was restored.

On August 6, 1996, Respondent submitted a new application for DEA registration. On this application, Respondent answered ''No'' to question 4(c): ''Has the applicant ever surrendered or had a Federal controlled substance registration revoked, suspended, restricted, or denied?'' Respondent also answered ''No'' to question 4(d): ''Has the applicant ever had a State professional license or controlled substance registration revoked, suspended, denied, restricted or placed on probation?'' These questions are hereinafter referred to as the liability questions. On August 22, 1996, Respondent was issued DEA Certificate of registration BM5006540.

When local DEA investigators learned of Respondent's registration, they requested that Respondent surrender the registration on the basis that he materially falsified his application by his answers to the liability questions. Respondent refused to surrender his registration because he did not believe that he materially falsified his 1996 application since in his opinion, he did not surrender his previous registration in August 1991.

When asked at the hearing whether he considered his actions in August 1991 a surrender of his previous DEA registration, Respondent stated that,

> No, I did not * * * You see, there's a matter of interpretation here. Some people might interest surrender as a gift, you know. The way I interpret surrender means that you're being forced to do it and there is a confrontation when you surrender a license or surrender anything. But if you just give somebody something without a confrontation, that's a gift. I interpreted surrender in the sense of, you know, this is a gift. They want to get it off the street. I'm doing them a favor, and that was my interpretation.

Further according to Respondent he did not consider signing the voluntary surrender form in 1991 a surrender because.

> [W]hen you surrender a license, usually you do it because stress is being put upon you. You're being threatened. Either you surrender your license or we're going to bring criminal charges against you, you see, and I asked these people, the DEA, ''Am I in any trouble with you,'' and they said, ''No, you're in no trouble.''

Respondent also testified that he did not believe that he falsified his 1996 application for registration by answering ''No'' to question 4(d) because he did not think that the question applied to him. He did not feel that his state license had been restricted. According

to Respondent, ''I had an agreement that I would voluntarily surrender my license for one year.''

On October 1, 1997, the New York Bureau of Professional Misconduct issued a statement of charges alleging that Respondent practiced the profession of medicine fraudulently and filed a false report by his response to question 4(c) on his 1996 DEA application, and by answering ''No'' to the following question on his state application executed in October 1990:

> Since you last registered has any hospital or licensed facility restricted or terminated your professional training, employment, privileges or have you ever voluntarily or involuntarily resigned or withdrawn from such association to avoid imposition of such action due to professional misconduct, unprofessional conduct, incompetence or negligence?

On March 2, 1998, a Hearing Committee of the Medical Board issued a Determination and Order finding that the specifications in the state of charges were not sustained, dismissing the charges in the statement of charges, and directing that no action be taken against Respondent's license to practice medicine in New York. The Committee found that the factual allegations as to how Respondent answered the questions at issue and that he had been suspended from the local hospital were proven, but that it was not proven that he surrendered his DEA registration in August 1991. The Committee also found that it was reasonable for Respondent to answer the questions as he did because, with respect to his hospital privileges, he reasonably interpreted that his suspension was not based on any of the reasons stated in the question, and he likewise did not consider that he surrendered his DEA registration in 1991.

As of the date of the hearing, Respondent was ''pretty much retired'' but every winter he goes to the Dominican Republic for a month to work in a charity clinic. According to Respondent he wants his DEA registration because he wants all of his credentials to be in order when he works in the Dominican Republic. However, no evidence was presented that a DEA registration is necessary for Respondent's charity work.

When asked at the hearing whether it is incumbent upon an individual who handles controlled substances to keep informed of applicable laws and regulations, Respondent replied.

> No. That's why you hire hospital administrators. I think it's incumbent upon DEA to let doctors know when the law changes and it's incumbent upon hospital administrators to bring doctors up to date.

When asked if he had taken any courses on the proper handling of controlled substances, Respondent testified,

> Doctors don't do that. There are no courses, you know. It's so little to learn. All you need to know is you need a DEA number and the law changes, and that's up to DEA and that's up to a hospital administrator to let you know. You don't have to go take a course for that.

The Deputy Administrator may revoke a DEA Certificate of Registration and deny and pending application pursuant to 21 U.S.C. 823(f) and 824(a)(4), if he determines that the continuance or issuance of such registration would be inconsistent with the public interest. In determining the public interest, the Deputy Administrator is to consider the following factors set forth in 21 U.S.C. 823(f).

(1) The recommendation of the appropriate State licensing board or professional disciplinary authority.

(2) The applicant's experience in dispensing, or conducting research with respect to controlled substances.

(3) The applicant's conviction record under Federal or State law relating to the manufacture, distribution or dispensing of controlled substances.

(4) Compliance with applicable State, Federal, or local laws relating to controlled substances.

(5) Such other conduct which may threaten the public health and safety.

These factors are to be considered in the disjunctive; the Deputy Administrator may rely on any one or a combination of factors and may give each factor the weight he deems appropriate in determining whether a registration should be revoked or an application for registration denied. See Henry J. Schwarz, Jr., M.D. 54 FR 16,422 (1989).

Regarding factor one, it is undisputed that Respondent is authorized by the State of New York to practice medicine and handle controlled substances. But, as Judge Bittner noted, ''inasmuch as State licensure is a necessary but not sufficient condition for a DEA registration, * * * this factor is not determinative.''

As to factor two, there is no allegation or evidence that Respondent handled controlled substances for other than legitimate medical purposes. However, it is undisputed that Respondent handled controlled substances without being registered with DEA to do so. But like Judge Bittner, the Deputy Administrator finds that this conduct is more appropriately considered under factor four.

Regarding factor three, it is undisputed that Respondent has not been convicted of violating any laws relating to the manufacture, distribution, or dispensing of controlled substances.

As to factor four, Respondent prescribed controlled substances and ordered them for hospital inpatients without being registered with DEA to handle controlled substances from February 1, 1972 until April 11, 1990, which is prohibited by 21 U.S.C. 841(a)(1) and 843(a)(2). Respondent knew or should have known that a DEA registration is necessary to handle controlled substances and that he did not possess a valid DEA registration. Particularly troubling to the Deputy Administrator is that Respondent supplied a DEA registration number to the hospital pharmacy when asked for one. It is inconceivable to the Deputy Administrator that Respondent could fill out the form to the hospital's director of pharmacy asking for Respondent's DEA registration and not wonder why the hospital needed this number, if as Respondent through a DEA registration is only needed if a physician dispenses controlled substances. This conduct at the very last demonstrates a careless disregard for the law relating to controlled substances.

However unlike Judge Bittner, the Deputy Administrator does not find that Respondent inappropriately ordered that phenobarbital be given to a patient on April 2, 1990. There is some dispute as to what was agreed to in advance by the medical director and Respondent regarding the providing of phenobarbital for the patient. Given that the medical director did not testify before Judge Bittner or at the hospital's fair hearing committee, the Deputy Administrator is unable to determine whether Respondent did anything improper.

As to factor five, the Government contends that Respondent falsified his 1996 DEA application for registration and that this conduct should be considered under this factor. In August 1991, Respondent signed a form that was clearly entitled ''Voluntary Surrender of Controlled Substances Privileges.'' He checked a box on the form that clearly stated that he was voluntarily surrendering his DEA Certificate of Registration in view of his desire to terminate his handling of controlled substances. Respondent's failure to consider this a surrender of his previous DEA registration and to note it as such on his 1996 application for registration is at the very least careless.

Judge Bittner concluded that Respondent's continued registration would be inconsistent with the public interest and recommended that his

registration be revoked. The Deputy Administrator agrees. Respondent handled controlled substances for over 18 years without a DEA registration. He listed a non-existent DEA number on his prescription pads and provided the number to the hospital pharmacy, but at the same time contended that he did not have a DEA number and did not need one because he did not dispense controlled substances. Further, he was at the very least careless in answering the liability questions on his application for registration. But even more troubling is Respondent's failure to take responsibility for his actions. He blames others for failing to keep him up-to-date on the requirements for handling controlled substances. As Judge Bittner stated, ''[i]n these circumstances, the inference is warranted * * * that Respondent is unwilling or unable to accept the responsibilities inherent in a DEA registration.''

According, the Deputy Administrator of the Drug Enforcement Administration, pursuant to the authority vested in him by 21 U.S.C. 823 and 824 and 28 CFR 0.100(b) and 0.104, hereby orders that DEA Certificate of Registration BM5006540, issued to Bernard C. Musselman, M.D., be, and it hereby is, revoked. The Deputy Administrator further orders that any pending applications for registration, be, and they hereby are, denied. This order is effective November 15, 1999.

Dated: October 7, 1999.

Donnie R. Marshall,

Deputy Administrator,

[FR Doc. 99–27003 Filed 10–14–99; 8:45 am]

BILLING CODE 4410–09–M

DEPARTMENT OF JUSTICE

Immigration and Naturalization Service

Agency Information Collection Activities: Proposed Collection; Comment Request

ACTION: Notice of information collection under review: Immigration Bond.

The Department of Justice, Immigration and Naturalization Service (INS) has submitted the following information collection request to the Office of Management and Budget (OMB) for review and clearance in accordance with the Paperwork Reduction Act of 1995. The information collection was previously published in the **Federal Register** on July 6, 1999 at 64 FR 36403, allowing for a 60-day public comment period. The INS received no comments on the proposed information collection.

The purpose of this notice is to notify the public that INS is reinstating with change this information collection and to allow an additional 30 days for public comments. Comments are encouraged and will be accepted until November 15, 1999. This process is conducted in accordance with 5 CFR 1320.10.

Written comments and/or suggestions regarding the items contained in this notice, especially regarding the estimated public burden and associated response time, should be directed to the Office of Management and Budget, Office of Information and Regulatory Affairs, Attention: Stuart Shapiro, Department of Justice Desk Officer, Room 10235, Washington, DC 20530; 202–395–7316.

Written comments and suggestions form the public and affected agencies concerning the proposed collection of information should address one or more of the following four points:

(1) Evaluate whether the proposed collection of information is necessary for the proper performance of the functions of the agency, including whether the information will have practical utility;

(2) Evaluate the accuracy of the agency's estimate of the burden of the proposed collection of information, including the validity of the methodology and assumptions used;

(3) Enhance the quality, utility, and clarity of the information to be collected; and

(4) Minimize the burden of the collection of information on those who are to respond, including through the use of appropriate automated, electronic, mechanical, or other technological collection techniques or other forms of information technology, *e.g.*, permitting electronic submission of responses.

Overview of this information collection:

(1) *Type of Information Collection:* Revision of a currently approved collection.

(2) *Title of the Form/Collection:* Immigration Bond.

(3) *Agency form number, if any, and the applicable component of the Department of Justice sponsoring the collection:* Form I–352. Detention and Deportation Division, Immigration and Naturalization Service.

(4) *Affected public who will be asked or required to respond, as well as a brief abstract:* Primary: individuals or households. The data collected on this form is used by the INS to ensure that the person or company posting the bond is aware of the duties and responsibilities associated with the bond. The form serves the purpose of instruction in the completion of the form, together with an explanation of the terms and conditions of the bond.

(5) *An estimate of the total number of respondents and the amount of time estimate for an average respondent to respond:* 25,000 responses at 30 minutes (.50) hours per response.

(6) *An estimate of the total public burden (in hours) associated with the collection:* 12,500 annual burden hours.

If you have additional comments suggestions, or need a copy of the proposed information collection instrument with instructions, or additional information, please contact Richard A. Sloan 202–514–3291, Director, Policy Directives and Instructions Branch, Immigration and Naturalization Service, U.S. Department of Justice, Room 5307, 425 I Street, NW, Washington, DC 20536. Additionally, comments and/or suggestions regarding the item(s) contained in this notice, especially regarding the estimated public burden and associated response time may also be directed to Mr. Richard A. Sloan.

If additional information is required contact: Mr. Robert B. Biggs, Clearance Officer, United States Department of Justice, Information Management and Security Staff, Justice Management Division, Suite 850, Washington Center, 1001 G Street, NW., Washington, DC 20530.

Dated: October 8, 1999.

Richard A. Sloan,

Department Clearance Officer, Department of Justice, Immigration and Naturalization Service.

[FR Dos. 99–26911 Filed 10–14–99; 8:45 am]

BILLING CODE 4410–10–M

DEPARTMENT OF JUSTICE

Immigration and Naturalization Service

Agency Information Collection Activities: Proposed Collection; Comment Request

ACTION: Notice of information collection under review: Application for Suspension of Deportation or Special Rule Cancellation of Removal (Pursuant to Section 203 of Pub. L. 105–100).

The Department of Justice, Immigration and Naturalization Service (INS) has submitted the following information collection request to the Office of Management and Budget (OMB) for review and clearance in accordance with the Paperwork Reduction Act of 1995. The information collection was previously published in the **Federal Register** on May 21, 1999 at

64 FR 27807, allowing for a 60–day public comment period. No comments were received by the INS on the proposed information collection.

The purpose of this notice is to allow an additional 30 days for public comments. Comments are encouraged and will be accepted until November 15, 1999. This process is conducted in accordance with 5 CFR 1320.10.

Written comments and/or suggestions, regarding the items contained in this notice, especially regarding the estimated public burden and associated response time, should be directed to the Office of Management and Budget, Office of Information and Regulatory Affairs, Attention: Dan Chenok, Department of Justice Desk Office, Room 10235, Washington, DC 20530: 202–395–7316.

Written comments and suggestions from the public and affected agencies concerning the proposed collection of information should address on or more of the following four points:

(1) Evaluate whether the proposed collection of information is necessary for the proper performance of the functions of the agency, including whether the information will have practical utility;

(2) Evaluate the accuracy of the agency's estimate of the burden of the proposed collection of information, including the validity of the methodology and assumptions used;

(3) Enhance the quality; utility, and clarity of the information to be collected; and

(4) Minimize the burden of the collection of information on those who are to respond, including through the use of appropriate automated, electronic, mechanical, or other technological collection techniques or other forms of information technology, *e.g.*, permitting electronic submission of responses.

Overview of this information collection:

(1) *Type of Information Collection:* Revision of currently approved information collection.

(2) *Title of the Form/Collection:* Application for Suspension of Deportation or Special Rule Cancellation of Removal (Pursuant to Section 203 of Public Law 105–100).

(3) *Agency form number, if any, and the applicable component of the Department of Justice sponsoring the collection:* Form I–881. Office of International Affairs, Asylum Division, Immigration and Naturalization Service.

(4) *Affected public who will be asked or required to respond, as well as brief abstract:* Primary: Business or other for-profit. This form is used by nonimmigrants to apply for suspension of deportation or special rule cancellation of removal. The information collected on this form is necessary in order to determine if the individual applying for this benefit meets the criteria for eligibility under Section 203 of Public Law 105–100. The information collected on this form is also necessary in order for the INS to determine if it has jurisdiction over an individual applying fot this benefit under section 203 of Public Law 105–100.

(5) *An estimate of the total number of respondents and the amount of time estimated for an average respondent to respond:* 100,000 responses at 12 hours per response.

(6) *An estimate of the total public burden (in hours) associated with the collection:* 1,200,000 annual burden hours.

If you have additional comments, suggestions, or need a copy of the proposed information collection instrument with instructions, or additional information, please contact Richard A. Sloan 202–514–3291, Director, Policy Directives and Instructions Branch, Immigration and Naturalization Service, U.S. Department of Justice, Room 5307, 425 I Street, NW., Washington, DC 20536. Additionally, comments and/or suggestions regarding the item(s) contained in this notice, especially regarding the estimated public burden and associated response time may also be directed to Mr. Richard A. Sloan.

If additional information is required contact: Mr. Robert B. Briggs, Clearance Officer, United States Department of Justice, Information Management and Security Staff, Justice Management Division, Suite 850, Washington Center, 1001 G Street, NW, Washington, DC 20530.

Dated: October 8, 1999.

Richard A. Sloan,

Department Clearance Officer, Department of Justice, Immigration and Naturalization Service.

[FR Doc. 99–26912 Filed 10–14–99; 8:45 am]

BILLING CODE 4410–18–M

DEPARTMENT OF LABOR

Employment and Training Administration

Labor Surplus Area Classifications Under Executive Orders 12073 and 10582

Notice of the Annual List of Labor Surplus Areas

AGENCY: Employment and Training Administration, Labor.

ACTION: Notice.

DATE: The annual list of labor surplus areas is effective October 1, 1999.

SUMMARY: The purpose of this notice is to announce the annual list of labor surplus areas.

FOR FURTHER INFORMATION CONTACT: William J. McGarrity, Labor Economist, USES, Employment and Training Administration, 200 Constitution avenue, N.W., Room N–4470, Attention: TEESS, Washington, D.C. 20210. Telephone: 202–219–5185, ext. 129.

SUPPLEMENTARY INFORMATION: The Department of Labor regulations implementing Executive Orders 12073 and 10582 are set forth at 20 CFR Part 654, Subparts A and B. Subpart A requires the Assistant Secretary of Labor to classify jurisdictions as labor surplus areas pursuant to the criteria specified in the regulations and to publish annually a list of labor surplus areas. Pursuant to those regulations the Assistant Secretary of Labor is hereby publishing the annual list of labor surplus areas.

Subpart B of Part 654 states that an area of substantial unemployment for purposes of Executive Order 10582 is any area classified as a labor surplus area under Subpart A. Thus, labor surplus areas under Executive Order 12073 are also areas of substantial unemployment under Executive Order 10582.

The areas listed below have been classified by the Assistant Secretary as labor surplus areas pursuant to 20 CFR 654.5(b) (48 FR 15615 April 12, 1983) effective October 1, 1999.

Signed at Washington, DC on October 1, 1999.

Raymond J. Bramucci,

Assistant Secretary.

LABOR SURPLUS AREAS

[October 1, 1999 Through September 30, 2000]

Eligible labor surplus areas	Civil jurisdictions included
ALABAMA	
ANNISTON CITY	ANNISTON CITY IN CALHOUN COUNTY.
BARBOUR COUNTY	BARBOUR COUNTY.
BIBB COUNTY	BIBB COUNTY.
BULLOCK COUNTY	BULLOCK COUNTY.
BUTLER COUNTY	BUTLER COUNTY.
CHOCTAW COUNTY	CHOCTAW COUNTY.
CLARKE COUNTY	CLARKE COUNTY.
COLBERT COUNTY	COLBERT COUNTY.
CONECUH COUNTY	CONECUH COUNTY.
COVINGTON COUNTY	COVINGTON COUNTY.
CRENSHAW COUNTY	CRENSHAW COUNTY.
DALLAS COUNTY	DALLAS COUNTY.
ESCAMBIA COUNTY	ESCAMBIA COUNTY.
FAYETTE COUNTY	FAYETTE COUNTY.
FLORENCE CITY	FLORENCE CITY IN. LAUDERDALE COUNTY.
FRANKLIN COUNTY	FRANKLIN COUNTY.
GADSDEN CITY	GADSDEN CITY IN ETOWAH COUNTY.
GENEVA COUNTY	GENEVA COUNTY.
GREENE COUNTY	GREENE COUNTY.
HALE COUNTY	HALE COUNTY.
JACKSON COUNTY	JACKSON COUNTY.
LAMAR COUNTY	LAMAR COUNTY.
LAWRENCE COUNTY	LAWRENCE COUNTY.
LOWNDES COUNTY	LOWNDES COUNTY.
MACON COUNTY	MACON COUNTY.
MARENGO COUNTY	MARENGO COUNTY.
MARION COUNTY	MARION COUNTY.
MONROE COUNTY	MONROE COUNTY.
PERRY COUNTY	PERRY COUNTY.
PICKENS COUNTY	PICKENS COUNTY.
PRICHARD CITY	PRICHARD CITY IN MOBILE COUNTY
SUMTER COUNTY	SUMTER COUNTY.
TALLADEGA COUNTY	TALLADEGA COUNTY.
WALKER COUNTY	WALKER COUNTY.
WASHINGTON COUNTY	WASHINGTON COUNTY.
WILCOX COUNTY	WILCOX COUNTY.
WINSTON COUNTY	WINSTON COUNTY.
ALASKA	
BETHEL CENSUS AREA	BETHEL CENSUS AREA.
BRISTOL BAY BOROUGH DIV	BRISTOL BAY BOROUGH DIV.
DENALI BOROUGH	DENALI BOROUGH.
DILLINGHAM CENSUS AREA	DILLINGHAM CENSUS AREA.
FAIRBANKS CITY	FAIRBANKS CITY IN FAIRBANKS NORTH STAR BOROUGH.
BALANCE OF FAIRBANKS NORTH STAR BOROUGH.	FAIRBANKS NORTH STAR BOROUGH LESS FAIRBANKS CITY.
HAINES BOROUGH	HAINES BOROUGH.
KENAI PENINSULA BOROUGH	KENAI PENINSULA BOROUGH.
KETCHIKAN GATEWAY BOROUGH	KETCHIKAN GATEWAY BOROUGH.
KODIAK ISLAND BOROUGH	KODIAK ISLAND BOROUGH.
LAKE AND PENINSULA BOROUGH	LAKE AND PENINSULA BOROUGH.
MATANUSKA-SUSITNA BOROUGH	MATANUSKA-SUSITNA BOROUGH.
NOME CENSUS AREA	NOME CENSUS AREA.
NORTHWEST ARCTIC BOROUGH	NORTHWEST ARCTIC BOROUGH.
PRINCE OF WALES OUTER KETCHIKAN	PRINCE OF WALES OUTER KETCHIKAN.
SKAGWAY-HOONAH-ANGOON CEN AREA	SKAGWAY-HOONAH-ANGOON CEN AREA.
SOUTHEAST FAIRBANKS CENSUS AREA	SOUTHEAST FAIRBANKS CENSUS AREA.
VALDEZ CORDOVA CENSUS AREA	VALDEZ CORDOVA CENSUS AREA.
WADE HAMPTON CENSUS AREA	WADE HAMPTON CENSUS AREA.
WRANGELL-PETERSBURG CENSUS AREA	WRANGELL-PETERSBURG CENSUS AREA.
YAKUTAT BOROUGH	YAKUTAT BOROUGH.
YUKON-KOYUKUK CENSUS AREA	YUKON-KOYUKUK CENSUS AREA.
ARIZONA	
APACHE COUNTY	APACHE COUNTY.
BALANCE OF COCHISE COUNTY	COCHISE COUNTY LESS SIERRA VISTA CITY.
BALANCE OF COCONINO COUNTY	COCONINO COUNTY LESS FLAGSTAFF CITY.

LABOR SURPLUS AREAS.—Continued

[October 1, 1999 Through September 30, 2000]

Eligible labor surplus areas	Civil jurisdictions included
FLAGSTAFF CITY	FLAGSTAFF CITY IN COCONINO COUNTY.
GILA COUNTY	GILA COUNTY.
GRAHAM COUNTY	GRAHAM COUNTY.
GREENLEE COUNTY	GREENLEE COUNTY.
LA PAZ COUNTY	LA PAZ COUNTY.
NAVAJO COUNTY	NAVAJO COUNTY.
SANTA CRUZ COUNTY	SANTA CRUZ COUNTY.
YUMA CITY	YUMA CITY IN YUMA COUNTY.
BALANCE OF YUMA COUNTY	YUMA COUNTY LESS YUMA CITY.
ARKANSAS	
ASHLEY COUNTY	ASHLEY COUNTY.
BOONE COUNTY	BOONE COUNTY.
BRADLEY COUNTY	BRADLEY COUNTY.
CALHOUN COUNTY	CALHOUN COUNTY.
CHICOT COUNTY	CHICOT COUNTY.
CLAY COUNTY	CLAY COUNTY.
CLEVELAND COUNTY	CLEVELAND COUNTY.
COLUMBIA COUNTY	COLUMBIA COUNTY.
CROSS COUNTY	CROSS COUNTY.
DALLAS COUNTY	DALLAS COUNTY.
DESHA COUNTY	DESHA COUNTY.
DREW COUNTY	DREW COUNTY.
GREENE COUNTY	GREENE COUNTY.
HEMPSTEAD COUNTY	HEMPSTEAD COUNTY.
HOT SPRING COUNTY	HOT SPRING COUNTY.
HOT SPRINGS CITY	HOT SPRINGS CITY IN GARLAND COUNTY.
IZARD COUNTY	IZARD COUNTY.
JACKSON COUNTY	JACKSON COUNTY.
JACKSONVILLE CITY	JACKSONVILLE CITY IN PULASKI COUNTY.
BALANCE OF JEFFERSON COUNTY	JEFFERSON COUNTY LESS PINE BLUFF CITY
LAFAYETTE COUNTY	LAFAYETTE COUNTY.
LAWRENCE COUNTY	LAWRENCE COUNTY.
LEE COUNTY	LEE COUNTY.
LINCOLN COUNTY	LINCOLN COUNTY.
LITTLE RIVER COUNTY	LITTLE RIVER COUNTY.
MISSISSIPPI COUNTY	MISSISSIPPI COUNTY.
MONROE COUNTY	MONROE COUNTY.
NEVADA COUNTY	NEVADA COUNTY.
NEWTON COUNTY	NEWTON COUNTY.
OUACHITA COUNTY	OUACHITA COUNTY.
PERRY COUNTY	PERRY COUNTY.
PHILLIPS COUNTY	PHILLIPS COUNTY.
PINE BLUFF CITY	PINE BLUFF CITY IN JEFFERSON COUNTY.
POINSETT COUNTY	POINSETT COUNTY.
PRAIRIE COUNTY	PRAIRIE COUNTY.
RANDOLPH COUNTY	RANDOLPH COUNTY.
SEARCY COUNTY	SEARCY COUNTY.
SEVIER COUNTY	SEVIER COUNTY.
SHARP COUNTY	SHARP COUNTY.
ST. FRANCIS COUNTY	ST. FRANCIS COUNTY.
UNION COUNTY	UNION COUNTY.
VAN BUREN COUNTY	VAN BUREN COUNTY.
WOODRUFF COUNTY	WOODRUFF COUNTY
CALIFORNIA	
ALPINE COUNTY	ALPINE COUNTY.
APPLE VALLEY CITY	APPLE VALLEY CITY IN SAN BERNARDINO COUNTY.
AZUSA CITY	AZUSA CITY IN LOS ANGELES COUNTY.
BAKERSFIELD CITY	BAKERSFIELD CITY IN KERN COUNTY.
BALDWIN PARK CITY	BALDWIN PARK CITY IN LOS ANGELES COUNTY.
BANNING CITY	BANNING CITY IN RIVERSIDE COUNTY.
BELL CITY	BELL CITY IN LOS ANGELES COUNTY.
BELL GARDENS CITY	BELL GARDENS CITY IN LOS ANGELES COUNTY.
BALANCE OF BUTTE COUNTY	BUTTE COUNTY LESS CHICO CITY, PARADISE CITY.
CALAVERAS COUNTY	CALAVERAS COUNTY.
CALEXICO CITY	CALEXICO CITY IN IMPERIAL COUNTY.
CARSON CITY	CARSON CITY IN LOS ANGELES COUNTY.
CATHEDRAL CITY	CATHEDRAL CITY IN RIVERSIDE COUNTY.

LABOR SURPLUS AREAS.—Continued

[October 1, 1999 Through September 30, 2000]

Eligible labor surplus areas	Civil jurisdictions included
CERES CITY	CERES CITY IN STANISLAUS COUNTY.
CHICO CITY	CHICO CITY IN BUTTE COUNTY.
CLOVIS CITY	CLOVIS CITY IN FRESNO COUNTY.
COLTON CITY	COLTON CITY IN SAN BERNARDINO COUNTY.
COLUSA COUNTY	COLUSA COUNTY COMPTON CITY COMPTON CITY IN LOS ANGELES COUNTY.
DEL NORTE COUNTY	DEL NORTE COUNTY DELANO CITY DELANO CITY IN KERN COUNTY.
EAST PALO ALTO CITY	EAST PALO ALTO CITY IN SAN MATEO COUNTY.
EL CENTRO CITY	EL CENTRO CITY IN IMPERIAL COUNTY.
EL MONTE CITY	EL MONTE CITY IN LOS ANGELES COUNTY.
EUREKA CITY	EUREKA CITY IN HUMBOLDT COUNTY.
FAIRFIELD CITY	FAIRFIELD CITY IN SOLANO COUNTY.
FRESNO CITY	FRESNO CITY IN FRESNO COUNTY.
BALANCE OF FRESNO COUNTY	FRESNO COUNTY LESS CLOVIS CITY.
GLENDALE CITY	GLENDALE CITY IN LOS ANGELES COUNTY.
GLENN COUNTY	GLENN COUNTY.
HANFORD CITY	HANFORD CITY IN KINGS COUNTY.
HAWTHORNE CITY	HAWTHORNE CITY IN LOS ANGELES COUNTY.
HEMET CITY	HEMET CITY IN RIVERSIDE COUNTY.
HESPERIA CITY	HESPERIA CITY IN SAN BERNARDINO COUNTY.
HIGHLAND CITY	HIGHLAND CITY IN SAN BERNARDINO COUNTY.
HOLISTER CITY	HOLISTER CITY IN SAN BENITO COUNTY.
BALANCE OF HUMBOLDT COUNTY	HUMBOLDT COUNTY LESS EUREKA CITY.
HUNTINGTON PARK CITY	HUNTINGTON PARK CITY IN LOS ANGELES COUNTY.
IMPERIAL BEACH CITY	IMPERIAL BEACH CITY IN SAN DIEGO COUNTY.
BALANCE OF IMPERIAL COUNTY	IMPERIAL COUNTY LESS CALEXICO CITY, EL CENTRO CITY.
INDIO CITY	INDIO CITY IN RIVERSIDE COUNTY.
INGLEWOOD CITY	INGLEWOOD CITY IN LOS ANGELES COUNTY.
INYO COUNTY	INYO COUNTY.
BALANCE OF KERN COUNTY	KERN COUNTY LESS BAKERSFIELD CITY, DELANO CITY, RIDGECREST CITY.
BALANCE OF KINGS COUNTY	KINGS COUNTY LESS HANFORD CITY.
LA PUENTE CITY	LA PUENTE CITY IN LOS ANGELES COUNTY.
LAKE COUNTY	LAKE COUNTY.
LAKE ELSINORE CITY	LAKE ELSINORE CITY IN RIVERSIDE COUNTY.
LANCASTER CITY	LANCASTER CITY IN LOS ANGELES COUNTY.
LASSEN COUNTY	LASSEN COUNTY.
LAWNDALE CITY	LAWNDALE CITY IN LOS ANGELES COUNTY.
LODI CITY	LODI CITY IN SAN JOAQUIN COUNTY.
LOMPOC CITY	LOMPOC CITY IN SANTA BARBARA COUNTY.
LONG BEACH CITY	LONG BEACH CITY IN LOS ANGELES COUNTY.
LOS ANGELES CITY	LOS ANGELES CITY IN LOS ANGELES COUNTY.
BALANCE OF LOS ANGELES COUNTY	LOS ANGELES COUNTY LESS AGOURA HILLS CITY, ALHAMBRA CITY, ARCADIA CITY, AZUSA CITY, BALDWIN PARK CITY, BELL CITY, BELL GARDENS CITY, BELLFLOWER CITY, BEVERLY HILLS CITY, BURBANK CITY, CARSON CITY, CERRITOS CITY, CLAREMONT CITY, COMPTON CITY, COVINA CITY, CULVER CITY, DIAMOND BAR CITY, DOWNEY CITY, EL MONTE CITY, GARDENA CITY, GLENDALE CITY, GLENDORA CITY, HAWTHORNE CITY, HUNTINGTON PARK CITY, INGLEWOOD CITY, LA MIRADA CITY, LA PUENTE CITY, LA VERNE CITY, LAKEWOOD CITY, LANCASTER CITY, LAWNDALE CITY, LONG BEACH CITY, LOS ANGELES CITY, LYNWOOD CITY, MANHATTAN BEACH CITY, MAYWOOD CITY, MONROVIA CITY, MONTEBELLO CITY, MONTEREY PARK CITY, NORWALK CITY, PALMDALE CITY, PARAMOUNT CITY, PASADENA CITY, PICO RIVERA CITY, POMONA CITY, RANCHO PALOS VERDES CITY, REDONDO BEACH CITY, ROSEMEAD CITY, SAN DIMAS CITY, SAN GABRIEL CITY, SANTA CLARITA CITY, SANTA MONICA CITY, SOUTH GATE CITY, TEMPLE CITY, TORRANCE CITY, WALNUT CITY, WEST COVINA CITY, WEST HOLLYWOOD CITY, WHITTIER CITY.
LYNWOOD CITY	LYNWOOD CITY IN LOS ANGELES COUNTY.
MADERA CITY	MADERA CITY IN MADERA COUNTY.
BALANCE OF MADERA COUNTY	MADERA COUNTY LESS MADERA CITY.
MANTECA CITY	MANTECA CITY IN SAN JOAQUIN COUNTY.
MARINA CITY	MARINA CITY IN MONTEREY COUNTY.
MARIPOSA COUNTY	MARIPOSA COUNTY.
MAYWOOD CITY	MAYWOOD CITY IN LOS ANGELES COUNTY.
MENDOCINO COUNTY	MENDOCINO COUNTY.
MERCED CITY	MERCED CITY IN MERCED COUNTY.
BALANCE OF MERCED COUNTY	MERCED COUNTY LESS MERCED CITY.
MODESTO CITY	MODESTO CITY IN STANISLAUS COUNTY.
MODOC COUNTY	MODOC COUNTY.
MONO COUNTY	MONO COUNTY.
MONTCLAIR CITY	MONTCLAIR CITY IN SAN BERNARDINO COUNTY.
MONTEBELLO CITY	MONTEBELLO CITY IN LOS ANGELES COUNTY.

LABOR SURPLUS AREAS.—Continued

[October 1, 1999 Through September 30, 2000]

Eligible labor surplus areas	Civil jurisdictions included
BALANCE OF MONTEREY COUNTY	MONTEREY COUNTY LESS MARINA CITY, MONTEREY CITY, SALINAS CITY, SEASIDE CITY.
MORENO VALLEY CITY	MORENO VALLEY CITY IN RIVERSIDE COUNTY.
NATIONAL CITY	NATIONAL CITY IN SAN DIEGO COUNTY.
NORWALK CITY	NORWALK CITY IN LOS ANGELES COUNTY.
OAKLAND CITY	OAKLAND CITY IN ALAMEDA COUNTY.
OXNARD CITY	OXNARD CITY IN VENTURA COUNTY.
PALMDALE CITY	PALMDALE CITY IN LOS ANGELES COUNTY.
PARADISE CITY	PARADISE CITY IN BUTTE COUNTY.
PARAMOUNT CITY	PARAMOUNT CITY IN LOS ANGELES COUNTY.
PERRIS CITY	PERRIS CITY IN RIVERSIDE COUNTY.
PICO RIVERA CITY	PICO RIVERA CITY IN LOS ANGELES COUNTY.
PLUMAS COUNTY	PLUMAS COUNTY.
POMONA CITY	POMONA CITY IN LOS ANGELES COUNTY.
PORTERVILLE CITY	PORTERVILLE CITY IN TULARE COUNTY.
REDDING CITY	REDDING CITY IN SHASTA COUNTY.
RIALTO CITY	RIALTO CITY IN SAN BERNARDINO COUNTY.
RICHMOND CITY	RICHMOND CITY IN CONTRA COSTA COUNTY.
RIDGECREST CITY	RIDGECREST CITY IN KERN COUNTY.
RIVERSIDE CITY	RIVERSIDE CITY IN RIVERSIDE COUNTY.
BALANCE OF RIVERSIDE COUNTY	RIVERSIDE COUNTY LESS BANNING CITY, CATHEDRAL CITY, CORONA CITY, HEMET CITY, INDIO CITY, LAKE ELSINORE CITY, MORENO VALLEY CITY, MURRIETA CITY, NORCO CITY, PALM DESERT CITY, PALM SPRINGS CITY, PERRIS CITY, RIVERSIDE CITY, TEMECULA CITY.
ROSEMEAD CITY	ROSEMEAD CITY IN LOS ANGELES COUNTY.
SACRAMENTO CITY	SACRAMENTO CITY IN SACRAMENTO COUNTY.
SALINAS CITY	SALINAS CITY IN MONTEREY COUNTY.
BALANCE OF SAN BENITO COUNTY	SAN BENITO COUNTY LESS HOLISTER CITY.
SAN BERNARDINO CITY	SAN BERNARDINO CITY IN SAN BERNARDINO COUNTY.
BALANCE OF SAN BERNARDINO COUNTY	SAN BERNARDINO COUNTY LESS APPLE VALLEY CITY, CHINO CITY, CHINO HILLS CITY, COLTON CITY, FONTANA CITY, HESPERIA CITY, HIGHLAND CITY, MONTCLAIR CITY, ONTARIO CITY, RANCHO CUCAMONGA CITY, REDLANDS CITY, RIALTO CITY, SAN BERNARDINO CITY, UPLAND CITY, VICTORVILLE CITY, YUCAIPA CITY.
BALANCE OF SAN JOAQUIN COUNTY	SAN JOAQUIN COUNTY LESS LODI CITY, MANTECA CITY, STOCKTON CITY, TRACEY CITY.
SAN PABLO CITY	SAN PABLO CITY IN CONTRA COSTA COUNTY.
SANTA CRUZ CITY	SANTA CRUZ CITY IN SANTA CRUZ COUNTY.
BALANCE OF SANTA CRUZ COUNTY	SANTA CRUZ COUNTY LESS SANTA CRUZ CITY, WATSONVILLE CITY.
SANTA MARIA CITY	SANTA MARIA CITY IN SANTA BARBARA COUNTY.
SANTA PAULA CITY	SANTA PAULA CITY IN VENTURA COUNTY.
SEASIDE CITY	SEASIDE CITY IN MONTEREY COUNTY.
BALANCE OF SHASTA COUNTY	SHASTA COUNTY LESS REDDING CITY.
SIERRA COUNTY	SIERRA COUNTY.
SISKIYOU COUNTY	SISKIYOU COUNTY.
SOUTH GATE CITY	SOUTH GATE CITY IN LOS ANGELES COUNTY.
BALANCE OF STANISLAUS COUNTY	STANISLAUS COUNTY LESS CERES CITY, MODESTO CITY, TURLOCK CITY.
STOCKTON CITY	STOCKTON CITY IN SAN JOAQUIN COUNTY.
SUISON CITY	SUISON CITY IN SOLANO COUNTY.
BALANCE OF SUTTER COUNTY	SUTTER COUNTY LESS YUBA CITY.
TEHAMA COUNTY	TEHAMA COUNTY.
TRACEY CITY	TRACEY CITY IN SAN JOAQUIN COUNTY.
TRINITY COUNTY	TRINITY COUNTY.
TULARE CITY	TULARE CITY IN TULARE COUNTY.
BALANCE OF TULARE COUNTY	TULARE COUNTY LESS PORTERVILLE CITY, TULARE CITY, VISALIA CITY.
TUOLUMNE COUNTY	TUOLUMNE COUNTY.
TURLOCK CITY	TURLOCK CITY IN STANISLAUS COUNTY.
VALLEJO CITY	VALLEJO CITY IN SOLANO COUNTY.
VICTORVILLE CITY	VICTORVILLE CITY IN SAN BERNARDINO COUNTY.
VISALIA CITY	VISALIA CITY IN TULARE COUNTY.
WATSONVILLE CITY	WATSONVILLE CITY IN SANTA CRUZ COUNTY.
WEST HOLLYWOOD CITY	WEST HOLLYWOOD CITY IN LOS ANGELES COUNTY.
WEST SACRAMENTO CITY	WEST SACRAMENTO CITY IN YOLO COUNTY.
WOODLAND CITY	WOODLAND CITY IN YOLO COUNTY.
YUBA CITY	YUBA CITY IN SUTTER COUNTY.
YUBA COUNTY	YUBA COUNTY.
COLORADO	
ALAMOSA COUNTY	ALAMOSA COUNTY.
CONEJOS COUNTY	CONEJOS COUNTY.

LABOR SURPLUS AREAS.—Continued

[October 1, 1999 Through September 30, 2000]

Eligible labor surplus areas	Civil jurisdictions included
COSTILLA COUNTY	COSTILLA COUNTY.
DOLORES COUNTY	DOLORES COUNTY.
LAS ANIMAS COUNTY	LAS ANIMAS COUNTY.
MONTEZUMA COUNTY	MONTEZUMA COUNTY.
MONTROSE COUNTY	MONTROSE COUNTY.
PUEBLO CITY	PUEBLO CITY IN PUEBLO COUNTY.
RIO GRANDE COUNTY	RIO GRANDE COUNTY.
SAGUACHE COUNTY	SAGUACHE COUNTY.
SAN JUAN COUNTY	SAN JUAN COUNTY.
CONNECTICUT	
ANSONIA TOWN	ANSONIA TOWN.
BRIDGEPORT CITY	BRIDGEPORT CITY.
HARTFORD CITY	HARTFORD CITY.
KILLINGLY TOWN	KILLINGLY TOWN.
NEW BRITAIN CITY	NEW BRITAIN CITY.
NEW LONDON CITY	NEW LONDON CITY.
PLAINFIELD TOWN	PLAINFIELD TOWN.
PUTNAM TOWN	PUTNAM TOWN.
SPRAGUE TOWN	SPRAGUE TOWN.
STERLING TOWN	STERLING TOWN.
VOLUNTOWN TOWN	VOLUNTOWN TOWN.
WATERBURY CITY	WATERBURY CITY.
DISTRICT OF COLUMBIA	
WASHINGTON DC CITY	WASHINGTON DC CITY IN DISTRICT OF COLUMBIA.
FLORIDA	
BALANCE OF BAY COUNTY	BAY COUNTY LESS PANAMA CITY.
BOYNTON BEACH CITY	BOYNTON BEACH CITY IN PALM BEACH COUNTY.
DE SOTO COUNTY	DE SOTO COUNTY.
DELRAY BEACH CITY	DELRAY BEACH CITY IN PALM BEACH COUNTY.
DIXIE COUNTY	DIXIE COUNTY .
FORT PIERCE CITY	FORT PIERCE CITY IN ST. LUCIE COUNTY.
FRANKLIN COUNTY	FRANKLIN COUNTY.
GLADES COUNTY	GLADES COUNTY
GULF COUNTY	GULF COUNTY.
HALLANDALE CITY	HALLANDALE CITY IN BROWARD COUNTY.
HAMILTON COUNTY	HAMILTON COUNTY.
HARDEE COUNTY	HARDEE COUNTY.
HENDRY COUNTY	HENDRY COUNTY.
HIALEAH CITY	HIALEAH CITY IN MIAMI-DADE COUNTY.
HIGHLANDS COUNTY	HIGHLANDS COUNTY.
HOLMES COUNTY	HOLMES COUNTY.
HOMESTEAD CITY	HOMESTEAD CITY IN MIAMI-DADE COUNTY.
INDIAN RIVER COUNTY	INDIAN RIVER COUNTY
LAKE WORTH CITY	LAKE WORTH CITY IN PALM BEACH COUNTY.
LAUDERDALE LAKES CITY	LAUDERDALE LAKES CITY IN BROWARD COUNTY.
MARTIN COUNTY	MARTIN COUNTY
MIAMI BEACH CITY	MIAMI BEACH CITY IN MIAMI-DADE COUNTY.
MIAMI CITY	MIAMI CITY IN MIAMI-DADE COUNTY.
NORTH MIAMI CITY	NORTH MIAMI CITY IN MIAMI-DADE COUNTY.
OKEECHOBEE COUNTY	OKEECHOBEE COUNTY.
PANAMA CITY	PANAMA CITY IN BAY COUNTY.
BALANCE OF POLK COUNTY	POLK COUNTY LESS LAKELAND CITY, WINTER HAVEN CITY.
PORT ST. LUCIE CITY	PORT ST. LUCIE CITY IN ST. LUCIE COUNTY.
RIVIERA BEACH CITY	RIVIERA BEACH CITY IN PALM BEACH COUNTY.
BALANCE OF ST. LUCIE COUNTY	ST. LUCIE COUNTY LESS FORT PIERCE CITY PORT ST. LUCIE CITY.
TAYLOR COUNTY	TAYLOR COUNTY.
WEST PALM BEACH CITY	WEST PALM BEACH CITY IN PALM BEACH COUNTY.
GEORGIA	
ALBANY CITY	ALBANY CITY IN DOUGHERTY COUNTY.
APPLING COUNTY	APPLING COUNTY.
ATKINSON COUNTY	ATKINSON COUNTY.
ATLANTA CITY	ATLANTA CITY IN DE KALB COUNTY FULTON COUNTY.
AUGUSTA CITY	AUGUSTA CITY IN RICHMOND COUNTY.

LABOR SURPLUS AREAS.—Continued

[October 1, 1999 Through September 30, 2000]

Eligible labor surplus areas	Civil jurisdictions included
BACON COUNTY	BACON COUNTY.
BAKER COUNTY	BAKER COUNTY.
BEN HILL COUNTY	BEN HILL COUNTY.
BRANTLEY COUNTY	BRANTLEY COUNTY.
BURKE COUNTY	BURKE COUNTY.
CALHOUN COUNTY	CALHOUN COUNTY
CHATTAHOOCHEE COUNTY	CHATTAHOOCHEE COUNTY.
CLAY COUNTY	CLAY COUNTY.
CRISP COUNTY	CRISP COUNTY.
DODGE COUNTY	DODGE COUNTY.
DOOLY COUNTY	DOOLY COUNTY.
EARLY COUNTY	EARLY COUNTY.
ELBERT COUNTY	ELBERT COUNTY.
EMANUEL COUNTY	EMANUEL COUNTY.
FANNIN COUNTY	FANNIN COUNTY.
GLASCOCK COUNTY	GLASCOCK COUNTY.
GRADY COUNTY	GRADY COUNTY.
GREENE COUNTY	GREENE COUNTY.
HANCOCK COUNTY	HANCOCK COUNTY.
HARALSON COUNTY	HARALSON COUNTY.
HINESVILLE CITY	HINESVILLE CITY IN LIBERTY COUNTY.
JEFF DAVIS COUNTY	JEFF DAVIS COUNTY.
JEFFERSON COUNTY	JEFFERSON COUNTY.
JOHNSON COUNTY	JOHNSON COUNTY.
LA GRANGE CITY	LA GRANGE CITY IN TROUP COUNTY.
BALANCE OF LIBERTY COUNTY	LIBERTY COUNTY LESS HINESVILLE CITY.
LINCOLN COUNTY	LINCOLN COUNTY.
MACON CITY	MACON CITY IN BIBB COUNTY. JONES COUNTY.
MACON COUNTY	MACON COUNTY.
MC DUFFIE COUNTY	MC DUFFIE COUNTY.
MITCHELL COUNTY	MITCHELL COUNTY.
MONROE COUNTY	MONROE COUNTY.
MONTGOMERY COUNTY	MONTGOMERY COUNTY.
PEACH COUNTY	PEACH COUNTY.
POLK COUNTY	POLK COUNTY.
RANDOLPH COUNTY	RANDOLPH COUNTY.
SCREVEN COUNTY	SCREVEN COUNTY.
STEWART COUNTY	STEWART COUNTY.
SUMTER COUNTY	SUMTER COUNTY.
TALIAFERRO COUNTY	TALIAFERRO COUNTY.
TAYLOR COUNTY	TAYLOR COUNTY.
TELFAIR COUNTY	TELFAIR COUNTY.
TERRELL COUNTY	TERRELL COUNTY.
TOOMBS COUNTY	TOOMBS COUNTY.
TOWNS COUNTY	TOWNS COUNTY.
TREUTLEN COUNTY	TREUTLEN COUNTY.
TURNER COUNTY	TURNER COUNTY.
TWIGGS COUNTY	TWIGGS COUNTY.
WARREN COUNTY	WARREN COUNTY.
WASHINGTON COUNTY	WASHINGTON COUNTY.
WAYNE COUNTY	WAYNE COUNTY.
WHEELER COUNTY	WHEELER COUNTY.
WILCOX COUNTY	WILCOX COUNTY.
WILKES COUNTY	WILKES COUNTY.
WILKINSON COUNTY	WILKINSON COUNTY.
WORTH COUNTY	WORTH COUNTY.
HAWAII	
HAWAII COUNTY	HAWAII COUNTY.
KAUAI COUNTY	KAUAI COUNTY.
MAUI COUNTY	MAUI COUNTY.
IDAHO	
ADAMS COUNTY	ADAMS COUNTY.
BENEWAH COUNTY	BENEWAH COUNTY.
BOISE COUNTY	BOISE COUNTY.
BONNER COUNTY	BONNER COUNTY.
BOUNDARY COUNTY	BOUNDARY COUNTY.

LABOR SURPLUS AREAS.—Continued

[October 1, 1999 Through September 30, 2000]

Eligible labor surplus areas	Civil jurisdictions included
CARIBOU COUNTY	CARIBOU COUNTY.
CASSIA COUNTY	CASSIA COUNTY.
CLEARWATER COUNTY	CLEARWATER COUNTY.
COEUR D'ALENE CITY	COEUR D'ALENE CITY IN KOOTENAI COUNTY.
CUSTER COUNTY	CUSTER COUNTY.
ELMORE COUNTY	ELMORE COUNTY.
FREMONT COUNTY	FREMONT COUNTY.
GEM COUNTY	GEM COUNTY.
IDAHO COUNTY	IDAHO COUNTY.
BALANCE OF KOOTENAI COUNTY	LESS COEUR D'ALENE CITY.
LEMHI COUNTY	LEMHI COUNTY.
LEWIS COUNTY	LEWIS COUNTY.
MINIDOKA COUNTY	MINIDOKA COUNTY.
BALANCE OF NEZ PERCE COUNTY	NEZ PERCE COUNTY LESS LEWISTON CITY.
PAYETTE COUNTY	PAYETTE COUNTY.
POWER COUNTY	POWER COUNTY.
SHOSHONE COUNTY	SHOSHONE COUNTY.
VALLEY COUNTY	VALLEY COUNTY.
WASHINGTON COUNTY	WASHINGTON COUNTY.
ILLINOIS	
ALEXANDER COUNTY	ALEXANDER COUNTY.
ALTON CITY	ALTON CITY IN MADISON COUNTY.
BELLEVILLE CITY	BELLEVILLE CITY IN ST. CLAIR COUNTY.
CARPENTERSVILLE CITY	CARPENTERSVILLE CITY IN KANE COUNTY.
CHICAGO HEIGHTS CITY	CHICAGO HEIGHTS CITY IN COOK COUNTY.
CICERO CITY	CICERO CITY IN COOK COUNTY.
CLAY COUNTY	CLAY COUNTY.
CRAWFORD COUNTY	CRAWFORD COUNTY.
DANVILLE CITY	DANVILLE CITY IN VERMILION COUNTY.
DECATUR CITY	DECATUR CITY IN MACON COUNTY.
DOLTON VILLAGE	DOLTON VILLAGE IN COOK COUNTY.
EAST ST. LOUIS CITY	EAST ST. LOUIS CITY IN ST. CLAIR COUNTY.
EDWARDS COUNTY	EDWARDS COUNTY.
FAYETTE COUNTY	FAYETTE COUNTY.
FRANKLIN COUNTY	FRANKLIN COUNTY.
FREEPORT CITY	FREEPORT CITY IN STEPHENSON COUNTY.
FULTON COUNTY	FULTON COUNTY.
GALLATIN COUNTY	GALLATIN COUNTY.
GRANITE CITY	GRANITE CITY IN MADISON COUNTY.
GRUNDY COUNTY	GRUNDY COUNTY.
HAMILTON COUNTY	HAMILTON COUNTY.
HARDIN COUNTY	HARDIN COUNTY.
HARVEY CITY	HARVEY CITY IN COOK COUNTY.
JASPER COUNTY	JASPER COUNTY.
JEFFERSON COUNTY	JEFFERSON COUNTY.
JOHNSON COUNTY	JOHNSON COUNTY.
JOLIET CITY	JOLIET CITY IN WILL COUNTY.
KANKAKEE CITY	KANKAKEE CITY IN KANKAKEE COUNTY.
LA SALLE COUNTY	LA SALLE COUNTY.
LAWRENCE COUNTY	LAWRENCE COUNTY.
MARION COUNTY	MARION COUNTY.
MASON COUNTY	MASON COUNTY.
MAYWOOD VILLAGE	MAYWOOD VILLAGE IN COOK COUNTY.
MONTGOMERY COUNTY	MONTGOMERY COUNTY.
NORTH CHICAGO CITY	NORTH CHICAGO CITY IN LAKE COUNTY.
PERRY COUNTY	PERRY COUNTY.
POPE COUNTY	POPE COUNTY.
PULASKI COUNTY	PULASKI COUNTY.
RANDOLPH COUNTY	RANDOLPH COUNTY.
ROCKFORD CITY	ROCKFORD CITY IN WINNEBAGO COUNTY.
SALINE COUNTY	SALINE COUNTY.
SCOTT COUNTY	SCOTT COUNTY.
UNION COUNTY	UNION COUNTY.
WABASH COUNTY	WABASH COUNTY.
WAUKEGAN CITY	WAUKEGAN CITY IN LAKE COUNTY.
WAYNE COUNTY	WAYNE COUNTY.
WHITE COUNTY	WHITE COUNTY.
WILLIAMSON COUNTY	WILLIAMSON COUNTY.

LABOR SURPLUS AREAS.—Continued

[October 1, 1999 Through September 30, 2000]

Eligible labor surplus areas	Civil jurisdictions included
INDIANA	
CRAWFORD COUNTY	CRAWFORD COUNTY.
EAST CHICAGO CITY	EAST CHICAGO CITY IN LAKE COUNTY.
GARY CITY	GARY CITY IN LAKE COUNTY.
GREENE COUNTY	GREENE COUNTY.
ORANGE COUNTY	ORANGE COUNTY.
PERRY COUNTY	PERRY COUNTY.
RANDOLPH COUNTY	RANDOLPH COUNTY.
SULLIVAN COUNTY	SULLIVAN COUNTY.
TERRE HAUTE CITY	TERRE HAUTE CITY IN VIGO COUNTY.
VERMILLION COUNTY	VERMILLION COUNTY
KANSAS	
ATCHISON COUNTY	ATCHISON COUNTY.
CHAUTAUQUA COUNTY	CHAUTAUQUA COUNTY.
CHEROKEE COUNTY	CHEROKEE COUNTY.
COFFEY COUNTY	COFFEY COUNTY.
DONIPHAN COUNTY	DONIPHAN COUNTY.
GEARY COUNTY	GEARY COUNTY.
KANSAS CITY KN	KANSAS CITY KN IN WYANDOTTE COUNTY.
LINN COUNTY	LINN COUNTY.
OSAGE COUNTY	OSAGE COUNTY.
WOODSON COUNTY	WOODSON COUNTY.
KENTUCKY	
ADAIR COUNTY	ADAIR COUNTY.
BALLARD COUNTY	BALLARD COUNTY.
BATH COUNTY	BATH COUNTY.
BELL COUNTY	BELL COUNTY.
BOYD COUNTY	BOYD COUNTY.
BREATHITT COUNTY	BREATHITT COUNTY.
BRECKINRIDGE COUNTY	BRECKINRIDGE COUNTY.
BUTLER COUNTY	BUTLER COUNTY.
CARLISLE COUNTY	CARLISLE COUNTY.
CARTER COUNTY	CARTER COUNTY.
CASEY COUNTY	CASEY COUNTY.
CLAY COUNTY	CLAY COUNTY.
CLINTON COUNTY	CLINTON COUNTY.
CRITTENDEN COUNTY	CRITTENDEN COUNTY.
CUMBERLAND COUNTY	CUMBERLAND COUNTY.
EDMONSON COUNTY	EDMONSON COUNTY.
ELLIOTT COUNTY	ELLIOTT COUNTY.
FLEMING COUNTY	FLEMING COUNTY.
FLOYD COUNTY	FLOYD COUNTY.
FULTON COUNTY	FULTON COUNTY.
GRAVES COUNTY	GRAVES COUNTY.
GRAYSON COUNTY	GRAYSON COUNTY.
GREEN COUNTY	GREEN COUNTY.
GREENUP COUNTY	GREENUP COUNTY.
HANCOCK COUNTY	HANCOCK COUNTY.
HARLAN COUNTY	HARLAN COUNTY.
HENDERSON CITY	HENDERSON CITY IN HENDERSON COUNTY.
JOHNSON COUNTY	JOHNSON COUNTY.
KNOTT COUNTY	KNOTT COUNTY.
KNOX COUNTY	KNOX COUNTY.
LAWRENCE COUNTY	LAWRENCE COUNTY.
LEE COUNTY	LEE COUNTY.
LESLIE COUNTY	LESLIE COUNTY.
LETCHER COUNTY	LETCHER COUNTY.
LEWIS COUNTY	LEWIS COUNTY.
LIVINGSTON COUNTY	LIVINGSTON COUNTY.
LYON COUNTY	LYON COUNTY.
MAGOFFIN COUNTY	MAGOFFIN COUNTY.
MARION COUNTY	MARION COUNTY.
MARSHALL COUNTY	MARSHALL COUNTY.
MARTIN COUNTY	MARTIN COUNTY.
MC CREARY COUNTY	MC CREARY COUNTY.
MC LEAN COUNTY	MC LEAN COUNTY.

LABOR SURPLUS AREAS.—Continued

[October 1, 1999 Through September 30, 2000]

Eligible labor surplus areas	Civil jurisdictions included
MENIFEE COUNTY	MENIFEE COUNTY.
MORGAN COUNTY	MORGAN COUNTY.
MUHLENBERG COUNTY	MUHLENBERG COUNTY.
OHIO COUNTY	OHIO COUNTY.
PERRY COUNTY	PERRY COUNTY.
PIKE COUNTY	PIKE COUNTY.
POWELL COUNTY	POWELL COUNTY.
RUSSELL COUNTY	RUSSELL COUNTY.
TAYLOR COUNTY	TAYLOR COUNTY.
UNION COUNTY	UNION COUNTY.
BALANCE OF WARREN COUNTY	WARREN COUNTY LESS BOWLING GREEN CITY.
WAYNE COUNTY	WAYNE COUNTY.
WEBSTER COUNTY	WEBSTER COUNTY.
WHITLEY COUNTY	WHITLEY COUNTY.
WOLFE COUNTY	WOLFE COUNTY.
LOUISIANA	
ACADIA PARISH	ACADIA PARISH.
ALEXANDRIA CITY	ALEXANDRIA CITY IN RAPIDES PARISH.
ALLEN PARISH	ALLEN PARISH.
AVOYELLES PARISH	AVOYELLES PARISH.
BEAUREGARD PARISH	BEAUREGARD PARISH.
BIENVILLE PARISH	BIENVILLE PARISH.
BALANCE OF BOSSIER PARISH	BOSSIER PARISH LESS BOSSIER CITY, SHREVEPORT CITY.
CALDWELL PARISH	CALDWELL PARISH.
CATAHOULA PARISH	CATAHOULA PARISH.
CLAIBORNE PARISH	CLAIBORNE PARISH.
CONCORDIA PARISH	CONCORDIA PARISH.
DE SOTO PARISH	DE SOTO PARISH.
EAST CARROLL PARISH	EAST CARROLL PARISH.
EAST FELICIANA PARISH	EAST FELICIANA PARISH.
FRANKLIN PARISH	FRANKLIN PARISH.
GRANT PARISH	GRANT PARISH.
IBERVILLE PARISH	IBERVILLE PARISH.
JACKSON PARISH	JACKSON PARISH.
JEFFERSON DAVIS PARISH	JEFFERSON DAVIS PARISH.
LA SALLE PARISH	LA SALLE PARISH.
LAKE CHARLES CITY	LAKE CHARLES CITY IN CALCASIEU PARISH.
MADISON PARISH	MADISON PARISH.
MONROE CITY	MONROE CITY IN OUACHITA PARISH.
MOREHOUSE PARISH	MOREHOUSE PARISH.
NATCHITOCHES PARISH	NATCHITOCHES PARISH.
NEW IBERIA CITY	NEW IBERIA CITY IN IBERIA PARISH.
NEW ORLEANS CITY	NEW ORLEANS CITY IN ORLEANS PARISH.
POINTE COUPEE PARISH	POINTE COUPEE PARISH.
RED RIVER PARISH	RED RIVER PARISH.
RICHLAND PARISH	RICHLAND PARISH.
SABINE PARISH	SABINE PARISH.
SHREVEPORT CITY	SHREVEPORT CITY IN BOSSIER PARISH, CADDO PARISH.
ST. HELENA PARISH	ST. HELENA PARISH.
ST. JAMES PARISH	ST. JAMES PARISH.
ST. JOHN BAPTIST PARISH	ST. JOHN BAPTIST PARISH.
ST. LANDRY PARISH	ST. LANDRY PARISH.
ST. MARTIN PARISH	ST. MARTIN PARISH.
ST. MARY PARISH	ST. MARY PARISH.
TANGIPAHOA PARISH	TANGIPAHOA PARISH.
TENSAS PARISH	TENSAS PARISH.
VERMILION PARISH	VERMILION PARISH.
VERNON PARISH	VERNON PARISH.
WASHINGTON PARISH	WASHINGTON PARISH.
WEBSTER PARISH	WEBSTER PARISH.
WEST CARROLL PARISH	WEST CARROLL PARISH.
WEST FELICIANA PARISH	WEST FELICIANA PARISH.
WINN PARISH	WINN PARISH.
MAINE	
AROOSTOOK COUNTY	AROOSTOOK COUNTY.
FRANKLIN COUNTY	FRANKLIN COUNTY.
OXFORD COUNTY	OXFORD COUNTY.

LABOR SURPLUS AREAS.—Continued

[October 1, 1999 Through September 30, 2000]

Eligible labor surplus areas	Civil jurisdictions included
PISCATAQUIS COUNTY	PISCATAQUIS COUNTY.
SOMERSET COUNTY	SOMERSET COUNTY.
WASHINGTON COUNTY	WASHINGTON COUNTY.
MARYLAND	
ALLEGANY COUNTY	ALLEGANY COUNTY.
ANNAPOLIS CITY	ANNAPOLIS CITY IN ANNE ARUNDEL COUNTY.
BALTIMORE CITY	BALTIMORE CITY.
CECIL COUNTY	CECIL COUNTY.
DORCHESTER COUNTY	DORCHESTER COUNTY.
GARRETT COUNTY	GARRETT COUNTY.
KENT COUNTY	KENT COUNTY.
SOMERSET COUNTY	SOMERSET COUNTY.
WORCESTER COUNTY	WORCESTER COUNTY.
MASSACHUSETTS	
ADAMS TOWN	ADAMS TOWN IN BERKSHIRE COUNTY.
ATHOL TOWN	ATHOL TOWN IN WORCESTER COUNTY.
CHESTER TOWN	CHESTER TOWN IN HAMPDEN COUNTY.
FALL RIVER CITY	FALL RIVER CITY IN BRISTOL COUNTY.
FLORIDA TOWN	FLORIDA TOWN IN BERKSHIRE COUNTY.
GAY HEAD TOWN	GAY HEAD TOWN IN DUKES COUNTY.
HINSDALE TOWN	HINSDALE TOWN IN BERKSHIRE COUNTY.
LAWRENCE CITY	LAWRENCE CITY IN ESSEX COUNTY.
MASHPEE TOWN	MASHPEE TOWN IN BARNSTABLE COUNTY.
NEW BEDFORD CITY	NEW BEDFORD CITY IN BRISTOL COUNTY.
PROVINCETOWN TOWN	PROVINCETOWN TOWN IN BARNSTABLE COUNTY.
SAVOY TOWN	SAVOY TOWN IN BERKSHIRE COUNTY.
SHELBURNE TOWN	SHELBURNE TOWN IN FRANKLIN COUNTY.
TRURO TOWN	TRURO TOWN IN BARNSTABLE COUNTY.
WELLFLEET TOWN	WELLFLEET TOWN IN BARNSTABLE COUNTY.
MICHIGAN	
ALCONA COUNTY	ALCONA COUNTY.
ALGER COUNTY	ALGER COUNTY.
ALPENA COUNTY	ALPENA COUNTY.
ANTRIM COUNTY	ANTRIM COUNTY.
ARENAC COUNTY	ARENAC COUNTY.
BARAGA COUNTY	BARAGA COUNTY.
BAY CITY	BAY CITY IN BAY COUNTY.
BENZIE COUNTY	BENZIE COUNTY.
BURTON CITY	BURTON CITY IN GENESEE COUNTY.
CHEBOYGAN COUNTY	CHEBOYGAN COUNTY.
CHIPPEWA COUNTY	CHIPPEWA COUNTY.
CLARE COUNTY	CLARE COUNTY.
CRAWFORD COUNTY	CRAWFORD COUNTY.
DELTA COUNTY	DELTA COUNTY.
DETROIT CITY	DETROIT CITY IN WAYNE COUNTY.
EMMET COUNTY	EMMET COUNTY.
FLINT CITY	FLINT CITY IN GENESEE COUNTY.
GLADWIN COUNTY	GLADWIN COUNTY.
GOGEBIC COUNTY	GOGEBIC COUNTY.
HIGHLAND PARK CITY	HIGHLAND PARK CITY IN WAYNE COUNTY.
IOSCO COUNTY	IOSCO COUNTY.
IRON COUNTY	IRON COUNTY.
JACKSON CITY	JACKSON CITY IN JACKSON COUNTY.
KALKASKA COUNTY	KALKASKA COUNTY.
KEWEENAW COUNTY	KEWEENAW COUNTY.
LAKE COUNTY	LAKE COUNTY.
LUCE COUNTY	LUCE COUNTY.
MACKINAC COUNTY	MACKINAC COUNTY.
MANISTEE COUNTY	MANISTEE COUNTY.
MASON COUNTY	MASON COUNTY.
MENOMINEE COUNTY	MENOMINEE COUNTY.
MISSAUKEE COUNTY	MISSAUKEE COUNTY.
MONTCALM COUNTY	MONTCALM COUNTY.
MONTMORENCY COUNTY	MONTMORENCY COUNTY.
MOUNT MORRIS TOWNSHIP	MOUNT MORRIS TOWNSHIP IN GENESEE COUNTY.

LABOR SURPLUS AREAS.—Continued

[October 1, 1999 Through September 30, 2000]

Eligible labor surplus areas	Civil jurisdictions included
MUSKEGON CITY	MUSKEGON CITY IN MUSKEGON COUNTY.
NEWAYGO COUNTY	NEWAYGO COUNTY.
OCEANA COUNTY	OCEANA COUNTY.
OGEMAW COUNTY	OGEMAW COUNTY.
ONTONAGON COUNTY	ONTONAGON COUNTY.
OSCEOLA COUNTY	OSCEOLA COUNTY.
OSCODA COUNTY	OSCODA COUNTY.
PONTIAC CITY	PONTIAC CITY IN OAKLAND COUNTY.
PORT HURON CITY	PORT HURON CITY IN ST. CLAIR COUNTY.
PRESQUE ISLE COUNTY	PRESQUE ISLE COUNTY.
ROSCOMMON COUNTY	ROSCOMMON COUNTY.
SAGINAW CITY	SAGINAW CITY IN SAGINAW COUNTY.
SCHOOLCRAFT COUNTY	SCHOOLCRAFT COUNTY.
WEXFORD COUNTY	WEXFORD COUNTY
MINNESOTA	
AITKIN COUNTY	AITKIN COUNTY.
BECKER COUNTY	BECKER COUNTY.
CASS COUNTY	CASS COUNTY.
CLEARWATER COUNTY	CLEARWATER COUNTY.
ITASCA COUNTY	ITASCA COUNTY.
KANABEC COUNTY	KANABEC COUNTY.
KOOCHICHING COUNTY	KOOCHICHING COUNTY.
MAHNOMEN COUNTY	MAHNOMEN COUNTY.
MARSHALL COUNTY	MARSHALL COUNTY.
MILLE LACS COUNTY	MILLE LACS COUNTY.
MORRISON COUNTY	MORRISON COUNTY.
NORMAN COUNTY	NORMAN COUNTY.
PINE COUNTY	PINE COUNTY.
RED LAKE COUNTY	RED LAKE COUNTY.
TODD COUNTY	TODD COUNTY
MISSISSIPPI	
ADAMS COUNTY	ADAMS COUNTY.
ALCORN COUNTY	ALCORN COUNTY.
ATTALA COUNTY	ATTALA COUNTY.
BOLIVAR COUNTY	BOLIVAR COUNTY.
CALHOUN COUNTY	CALHOUN COUNTY.
CHICKASAW COUNTY	CHICKASAW COUNTY.
CHOCTAW COUNTY	CHOCTAW COUNTY.
CLAIBORNE COUNTY	CLAIBORNE COUNTY.
CLARKE COUNTY	CLARKE COUNTY.
CLAY COUNTY	CLAY COUNTY.
COAHOMA COUNTY	COAHOMA COUNTY.
COLUMBUS CITY	COLUMBUS CITY IN LOWNDES COUNTY.
COPIAH COUNTY	COPIAH COUNTY.
FRANKLIN COUNTY	FRANKLIN COUNTY.
GEORGE COUNTY	GEORGE COUNTY.
GREENE COUNTY	GREENE COUNTY.
GREENVILLE CITY	GREENVILLE CITY IN WASHINGTON COUNTY.
GRENADA COUNTY	GRENADA COUNTY.
HOLMES COUNTY	HOLMES COUNTY.
HUMPHREYS COUNTY	HUMPHREYS COUNTY.
ISSAQUENA COUNTY	ISSAQUENA COUNTY.
JEFFERSON COUNTY	JEFFERSON COUNTY.
JEFFERSON DAVIS COUNTY	JEFFERSON DAVIS COUNTY.
KEMPER COUNTY	KEMPER COUNTY.
LEFLORE COUNTY	LEFLORE COUNTY.
MARION COUNTY	MARION COUNTY.
MARSHALL COUNTY	MARSHALL COUNTY.
MERIDIAN CITY	MERIDIAN CITY IN LAUDERDALE COUNTY.
MONROE COUNTY	MONROE COUNTY.
MONTGOMERY COUNTY	MONTGOMERY COUNTY.
NOXUBEE COUNTY	NOXUBEE COUNTY.
PANOLA COUNTY	PANOLA COUNTY.
PERRY COUNTY	PERRY COUNTY.
PRENTISS COUNTY	PRENTISS COUNTY.
QUITMAN COUNTY	QUITMAN COUNTY.
SHARKEY COUNTY	SHARKEY COUNTY.

LABOR SURPLUS AREAS.—Continued

[October 1, 1999 Through September 30, 2000]

Eligible labor surplus areas	Civil jurisdictions included
SIMPSON COUNTY	SIMPSON COUNTY.
SUNFLOWER COUNTY	SUNFLOWER COUNTY.
TALLAHATCHIE COUNTY	TALLAHATCHIE COUNTY.
TIPPAH COUNTY	TIPPAH COUNTY.
TISHOMINGO COUNTY	TISHOMINGO COUNTY.
TUNICA COUNTY	TUNICA COUNTY.
WALTHALL COUNTY	WALTHALL COUNTY.
BALANCE OF WASHINGTON COUNTY	WASHINGTON COUNTY LESS GREENVILLE CITY.
WAYNE COUNTY	WAYNE COUNTY.
WILKINSON COUNTY	WILKINSON COUNTY.
WINSTON COUNTY	WINSTON COUNTY.
YALOBUSHA COUNTY	YALOBUSHA COUNTY.
YAZOO COUNTY	YAZOO COUNTY.
MISSOURI	
BENTON COUNTY	BENTON COUNTY.
BOLLINGER COUNTY	BOLLINGER COUNTY.
CALDWELL COUNTY	CALDWELL COUNTY.
CLARK COUNTY	CLARK COUNTY.
CRAWFORD COUNTY	CRAWFORD COUNTY.
DOUGLAS COUNTY	DOUGLAS COUNTY.
DUNKLIN COUNTY	DUNKLIN COUNTY.
HICKORY COUNTY	HICKORY COUNTY.
IRON COUNTY	IRON COUNTY.
LINN COUNTY	LINN COUNTY.
MADISON COUNTY	MADISON COUNTY.
MILLER COUNTY	MILLER COUNTY.
MISSISSIPPI COUNTY	MISSISSIPPI COUNTY.
MONTGOMERY COUNTY	MONTGOMERY COUNTY.
NEW MADRID COUNTY	NEW MADRID COUNTY.
OZARK COUNTY	OZARK COUNTY.
PEMISCOT COUNTY	PEMISCOT COUNTY.
SHANNON COUNTY	SHANNON COUNTY.
ST. LOUIS CITY	ST. LOUIS CITY.
ST. FRANCOIS COUNTY	ST. FRANCOIS COUNTY.
STODDARD COUNTY	STODDARD COUNTY.
STONE COUNTY	STONE COUNTY.
TANEY COUNTY	TANEY COUNTY.
TEXAS COUNTY	TEXAS COUNTY.
WASHINGTON COUNTY	WASHINGTON COUNTY.
WAYNE COUNTY	WAYNE COUNTY.
WRIGHT COUNTY	WRIGHT COUNTY.
MONTANA	
ANACONDA-DEER LODGE COUNTY	ANACONDA-DEER LODGE COUNTY.
BIG HORN COUNTY	BIG HORN COUNTY.
BLAINE COUNTY	BLAINE COUNTY.
FERGUS COUNTY	FERGUS COUNTY.
FLATHEAD COUNTY	FLATHEAD COUNTY.
GLACIER COUNTY	GLACIER COUNTY.
GOLDEN VALLEY COUNTY	GOLDEN VALLEY COUNTY.
GRANITE COUNTY	GRANITE COUNTY.
LAKE COUNTY	LAKE COUNTY.
LINCOLN COUNTY	LINCOLN COUNTY.
MINERAL COUNTY	MINERAL COUNTY.
MUSSELSHELL COUNTY	MUSSELSHELL COUNTY.
PHILLIPS COUNTY	PHILLIPS COUNTY.
RAVALLI COUNTY	RAVALLI COUNTY.
ROOSEVELT COUNTY	ROOSEVELT COUNTY.
ROSEBUD COUNTY	ROSEBUD COUNTY.
SANDERS COUNTY	SANDERS COUNTY.
NEBRASKA	
JOHNSON COUNTY	JOHNSON COUNTY.
THURSTON COUNTY	THURSTON COUNTY.
NEVADA	
ESMERALDA COUNTY	ESMERALDA COUNTY.

LABOR SURPLUS AREAS.—Continued

[October 1, 1999 Through September 30, 2000]

Eligible labor surplus areas	Civil jurisdictions included
LANDER COUNTY	LANDER COUNTY.
LINCOLN COUNTY	LINCOLN COUNTY.
LYON COUNTY	LYON COUNTY.
MINERAL COUNTY	MINERAL COUNTY.
NORTH LAS VEGAS CITY	NORTH LAS VEGAS CITY IN CLARK COUNTY.
NEW JERSEY	
ATLANTIC CITY	ATLANTIC CITY IN ATLANTIC COUNTY.
BALANCE OF ATLANTIC COUNTY	ATLANTIC COUNTY LESS ATLANTIC CITY.
BERKELEY TOWNSHIP	BERKELEY TOWNSHIP IN OCEAN COUNTY.
CAMDEN CITY	CAMDEN CITY IN CAMDEN COUNTY.
CAPE MAY COUNTY	CAPE MAY COUNTY.
CITY OF ORANGE TOWNSHIP	CITY OF ORANGE TOWNSHIP IN ESSEX COUNTY.
BALANCE OF CUMBERLAND COUNTY	CUMBERLAND COUNTY LESS MILLVILLE CITY, VINELAND CITY.
EAST ORANGE CITY	EAST ORANGE CITY IN ESSEX COUNTY.
EGG HARBOR TOWNSHIP	EGG HARBOR TOWNSHIP IN ATLANTIC COUNTY.
ELIZABETH CITY	ELIZABETH CITY IN UNION COUNTY.
IRVINGTON TOWNSHIP	IRVINGTON TOWNSHIP IN ESSEX COUNTY.
JERSEY CITY	JERSEY CITY IN HUDSON COUNTY.
LAKEWOOD TOWNSHIP	LAKEWOOD TOWNSHIP IN OCEAN COUNTY.
LONG BRANCH CITY	LONG BRANCH CITY IN MONMOUTH COUNTY.
MANCHESTER TOWNSHIP	MANCHESTER TOWNSHIP IN OCEAN COUNTY.
MILLVILLE CITY	MILLVILLE CITY IN CUMBERLAND COUNTY.
NEW BRUNSWICK CITY	NEW BRUNSWICK CITY IN MIDDLESEX COUNTY.
NEWARK CITY	NEWARK CITY IN ESSEX COUNTY.
NORTH BERGEN TOWNSHIP	NORTH BERGEN TOWNSHIP IN HUDSON COUNTY.
PASSAIC CITY	PASSAIC CITY IN PASSAIC COUNTY.
PATERSON CITY	PATERSON CITY IN PASSAIC COUNTY.
PERTH AMBOY CITY	PERTH AMBOY CITY IN MIDDLESEX COUNTY.
PLAINFIELD CITY	PLAINFIELD CITY IN UNION COUNTY.
TRENTON CITY	TRENTON CITY IN MERCER COUNTY.
UNION CITY	UNION CITY IN HUDSON COUNTY.
VINELAND CITY	VINELAND CITY IN CUMBERLAND COUNTY.
WEST NEW YORK TOWN	WEST NEW YORK TOWN IN HUDSON COUNTY.
NEW MEXICO	
CARLSBAD CITY	CARLSBAD CITY IN EDDY COUNTY.
CATRON COUNTY	CATRON COUNTY.
BALANCE OF CHAVES COUNTY	CHAVES COUNTY LESS ROSWELL CITY.
CIBOLA COUNTY	CIBOLA COUNTY.
COLFAX COUNTY	COLFAX COUNTY.
BALANCE OF DONA ANA COUNTY	DONA ANA COUNTY LESS LAS CRUCES CITY.
GRANT COUNTY	GRANT COUNTY.
GUADALUPE COUNTY	GUADALUPE COUNTY.
LAS CRUCES CITY	LAS CRUCES CITY IN DONA ANA COUNTY.
LUNA COUNTY	LUNA COUNTY.
MC KINLEY COUNTY	MC KINLEY COUNTY.
MORA COUNTY	MORA COUNTY.
BALANCE OF OTERO COUNTY	OTERO COUNTY LESS ALAMOGORDO CITY.
RIO ARRIBA COUNTY	RIO ARRIBA COUNTY
ROSWELL CITY	ROSWELL CITY IN CHAVES COUNTY.
BALANCE OF SAN JUAN COUNTY	SAN JUAN COUNTY LESS FARMINGTON CITY.
SAN MIGUEL COUNTY	SAN MIGUEL COUNTY.
BALANCE OF SANDOVAL COUNTY	SANDOVAL COUNTY LESS RIO RANCHO CITY.
SOCORRO COUNTY	SOCORRO COUNTY.
TAOS COUNTY	TAOS COUNTY.
TORRANCE COUNTY	TORRANCE COUNTY.
NEW YORK	
ALLEGANY COUNTY	ALLEGANY COUNTY.
AUBURN CITY	AUBURN CITY IN CAYUGA COUNTY.
BINGHAMTON CITY	BINGHAMTON CITY IN BROOME COUNTY.
BRONX COUNTY	BRONX COUNTY.
BUFFALO CITY	BUFFALO CITY IN ERIE COUNTY.
CATTARAUGUS COUNTY	CATTARAUGUS COUNTY.
CHENANGO COUNTY	CHENANGO COUNTY.
CLINTON COUNTY	CLINTON COUNTY.
CORTLAND COUNTY	CORTLAND COUNTY.

LABOR SURPLUS AREAS.—Continued

[October 1, 1999 Through September 30, 2000]

Eligible labor surplus areas	Civil jurisdictions included
ELMIRA CITY	ELMIRA CITY IN CHEMUNG COUNTY.
ESSEX COUNTY	ESSEX COUNTY.
FRANKLIN COUNTY	FRANKLIN COUNTY.
FULTON COUNTY	FULTON COUNTY.
HAMILTON COUNTY	HAMILTON COUNTY.
HERKIMER COUNTY	HERKIMER COUNTY.
JAMESTOWN CITY	JAMESTOWN CITY IN CHAUTAUQUA COUNTY.
BALANCE OF JEFFERSON COUNTY	JEFFERSON COUNTY LESS WATERTOWN CITY.
KINGS COUNTY	KINGS COUNTY.
LEWIS COUNTY	LEWIS COUNTY.
LOCKPORT CITY	LOCKPORT CITY IN NIAGARA COUNTY.
MONTGOMERY COUNTY	MONTGOMERY COUNTY.
NEW YORK COUNTY	NEW YORK COUNTY.
NEWBURGH CITY	NEWBURGH CITY IN ORANGE COUNTY.
NIAGARA FALLS CITY	NIAGARA FALLS CITY IN NIAGARA COUNTY.
OSWEGO COUNTY	OSWEGO COUNTY.
POUGHKEEPSIE CITY	POUGHKEEPSIE CITY IN DUTCHESS COUNTY.
QUEENS COUNTY	QUEENS COUNTY.
RICHMOND COUNTY	RICHMOND COUNTY.
ROCHESTER CITY	ROCHESTER CITY IN MONROE COUNTY.
SCHENECTADY CITY	SCHENECTADY CITY IN SCHENECTADY COUNTY.
ST. LAWRENCE COUNTY	ST. LAWRENCE COUNTY.
STEUBEN COUNTY	STEUBEN COUNTY.
SULLIVAN COUNTY	SULLIVAN COUNTY.
TROY CITY	TROY CITY IN RENSSELAER COUNTY.
UTICA CITY	UTICA CITY IN ONEIDA COUNTY.
BALANCE OF WARREN COUNTY	WARREN COUNTY LESS QUEENSBURY TOWN.
WATERTOWN CITY	WATERTOWN CITY IN JEFFERSON COUNTY.
WYOMING COUNTY	WYOMING COUNTY.
NORTH CAROLINA	
ANSON COUNTY	ANSON COUNTY.
ASHE COUNTY	ASHE COUNTY.
BEAUFORT COUNTY	BEAUFORT COUNTY.
CHEROKEE COUNTY	CHEROKEE COUNTY.
COLUMBUS COUNTY	COLUMBUS COUNTY.
BALANCE OF EDGECOMBE COUNTY	EDGECOMBE COUNTY LESS ROCKY MOUNT CITY.
GRAHAM COUNTY	GRAHAM COUNTY.
HALIFAX COUNTY	HALIFAX COUNTY.
HYDE COUNTY	HYDE COUNTY.
KINSTON CITY	KINSTON CITY IN LENOIR COUNTY.
MARTIN COUNTY	MARTIN COUNTY.
MITCHELL COUNTY	MITCHELL COUNTY.
NORTHAMPTON COUNTY	NORTHAMPTON COUNTY.
RICHMOND COUNTY	RICHMOND COUNTY.
ROBESON COUNTY	ROBESON COUNTY.
ROCKY MOUNT CITY	ROCKY MOUNT CITY IN EDGECOMBE COUNTY.
	NASH COUNTY.
SCOTLAND COUNTY	SCOTLAND COUNTY.
SWAIN COUNTY	SWAIN COUNTY.
TYRRELL COUNTY	TYRRELL COUNTY.
VANCE COUNTY	VANCE COUNTY.
WARREN COUNTY	WARREN COUNTY.
WASHINGTON COUNTY	WASHINGTON COUNTY.
WILSON CITY	WILSON CITY IN WILSON COUNTY.
NORTH DAKOTA	
BENSON COUNTY	BENSON COUNTY.
MERCER COUNTY	MERCER COUNTY.
ROLETTE COUNTY	ROLETTE COUNTY.
SIOUX COUNTY	SIOUX COUNTY.
OHIO	
ADAMS COUNTY	ADAMS COUNTY.
ASHTABULA COUNTY	ASHTABULA COUNTY.
BELMONT COUNTY	BELMONT COUNTY.
CANTON CITY	CANTON CITY IN STARK COUNTY.
CLEVELAND CITY	CLEVELAND CITY IN CUYAHOGA COUNTY.

LABOR SURPLUS AREAS—Continued

[October 1, 1999 Through September 30, 2000]

Eligible labor surplus areas	Civil jurisdictions included
DAYTON CITY	DAYTON CITY IN MONTGOMERY COUNTY.
EAST CLEVELAND CITY	EAST CLEVELAND CITY IN CUYAHOGA COUNTY.
GALLIA COUNTY	GALLIA COUNTY.
GUERNSEY COUNTY	GUERNSEY COUNTY.
HARRISON COUNTY	HARRISON COUNTY.
HOCKING COUNTY	HOCKING COUNTY.
HURON COUNTY	HURON COUNTY.
JACKSON COUNTY	JACKSON COUNTY.
JEFFERSON COUNTY	JEFFERSON COUNTY.
LAWRENCE COUNTY	LAWRENCE COUNTY.
LIMA CITY	LIMA CITY IN ALLEN COUNTY.
LORAIN CITY	LORAIN CITY IN LORAIN COUNTY.
MANSFIELD CITY	MANSFIELD CITY IN RICHLAND COUNTY.
MARION CITY	MARION CITY IN MARION COUNTY.
MEIGS COUNTY	MEIGS COUNTY.
MERCER COUNTY	MERCER COUNTY.
MONROE COUNTY	MONROE COUNTY.
MORGAN COUNTY	MORGAN COUNTY.
NOBLE COUNTY	NOBLE COUNTY.
OTTAWA COUNTY	OTTAWA COUNTY.
PERRY COUNTY	PERRY COUNTY.
PIKE COUNTY	PIKE COUNTY.
SANDUSKY CITY	SANDUSKY CITY IN ERIE COUNTY.
SANDUSKY COUNTY	SANDUSKY COUNTY.
SCIOTO COUNTY	SCIOTO COUNTY.
SENECA COUNTY	SENECA COUNTY.
TOLEDO CITY	TOLEDO CITY IN LUCAS COUNTY.
VINTON COUNTY	VINTON COUNTY.
WARREN CITY	WARREN CITY IN TRUMBULL COUNTY.
YOUNGSTOWN CITY	YOUNGSTOWN CITY IN MAHONING COUNTY.
ZANESVILLE CITY	ZANESVILLE CITY IN MUSKINGUM COUNTY.
OKLAHOMA	
ADAIR COUNTY	ADAIR COUNTY.
CARTER COUNTY	CARTER COUNTY.
CHOCTAW COUNTY	CHOCTAW COUNTY.
COAL COUNTY	COAL COUNTY.
GARVIN COUNTY	GARVIN COUNTY.
HASKELL COUNTY	HASKELL COUNTY.
HUGHES COUNTY	HUGHES COUNTY.
JOHNSTON COUNTY	JOHNSTON COUNTY.
BALANCE OF KAY COUNTY	KAY COUNTY LESS PONCA CITY.
LATIMER COUNTY	LATIMER COUNTY.
LE FLORE COUNTY	LE FLORE COUNTY.
MC CURTAIN COUNTY	MC CURTAIN COUNTY.
MC INTOSH COUNTY	MC INTOSH COUNTY.
MURRAY COUNTY	MURRAY COUNTY.
BALANCE OF MUSKOGEE COUNTY	MUSKOGEE COUNTY LESS MUSKOGEE CITY.
OKFUSKEE COUNTY	OKFUSKEE COUNTY.
OKMULGEE COUNTY	OKMULGEE COUNTY.
OTTAWA COUNTY	OTTAWA COUNTY.
PAWNEE COUNTY	PAWNEE COUNTY.
PITTSBURG COUNTY	PITTSBURG COUNTY.
PONCA CITY	PONCA CITY IN KAY COUNTY.
PUSHMATAHA COUNTY	PUSHMATAHA COUNTY.
SEMINOLE COUNTY	SEMINOLE COUNTY.
SEQUOYAH COUNTY	SEQUOYAH COUNTY.
OREGON	
ALBANY CITY	ALBANY CITY IN LINN COUNTY.
BAKER COUNTY	BAKER COUNTY.
BEND CITY	BEND CITY IN DESCHUTES COUNTY.
CLATSOP COUNTY	CLATSOP COUNTY.
COLUMBIA COUNTY	COLUMBIA COUNTY.
COOS COUNTY	COOS COUNTY.
CROOK COUNTY	CROOK COUNTY.
CURRY COUNTY	CURRY COUNTY.
BALANCE OF DESCHUTES COUNTY	DESCHUTES COUNTY LESS BEND CITY.
DOUGLAS COUNTY	DOUGLAS COUNTY.
GRANT COUNTY	GRANT COUNTY.

LABOR SURPLUS AREAS.—Continued

[October 1, 1999 Through September 30, 2000]

Eligible labor surplus areas	Civil jurisdictions included
HARNEY COUNTY	HARNEY COUNTY.
HOOD RIVER COUNTY	HOOD RIVER COUNTY.
BALANCE OF JACKSON COUNTY	JACKSON COUNTY LESS MEDFORD CITY.
JEFFERSON COUNTY	JEFFERSON COUNTY.
JOSEPHINE COUNTY	JOSEPHINE COUNTY.
KLAMATH COUNTY	KLAMATH COUNTY.
LAKE COUNTY	LAKE COUNTY.
LINCOLN COUNTY	LINCOLN COUNTY.
BALANCE OF LINN COUNTY	LINN COUNTY LESS ALBANY CITY.
MALHEUR COUNTY	MALHEUR COUNTY.
MEDFORD CITY	MEDFORD CITY IN JACKSON COUNTY.
MORROW COUNTY	MORROW COUNTY.
SPRINGFIELD CITY	SPRINGFIELD CITY IN LANE COUNTY.
TILLAMOOK COUNTY	TILLAMOOK COUNTY.
UMATILLA COUNTY	UMATILLA COUNTY.
UNION COUNTY	UNION COUNTY.
WALLOWA COUNTY	WALLOWA COUNTY.
WASCO COUNTY	WASCO COUNTY.
WHEELER COUNTY	WHEELER COUNTY.
PENNSYLVANIA	
ALTOONA CITY	ALTOONA CITY IN BLAIR COUNTY.
ARMSTRONG COUNTY	ARMSTRONG COUNTY.
BEDFORD COUNTY	BEDFORD COUNTY.
BALANCE OF CAMBRIA COUNTY	CAMBRIA COUNTY LESS JOHNSTOWN CITY.
CAMERON COUNTY	CAMERON COUNTY.
CARBON COUNTY	CARBON COUNTY.
CHESTER CITY	CHESTER CITY IN DELAWARE COUNTY.
CLEARFIELD COUNTY	CLEARFIELD COUNTY.
CLINTON COUNTY	CLINTON COUNTY.
COLUMBIA COUNTY	COLUMBIA COUNTY.
ELK COUNTY	ELK COUNTY.
ERIE CITY	ERIE CITY IN ERIE COUNTY.
FAYETTE COUNTY	FAYETTE COUNTY.
FOREST COUNTY	FOREST COUNTY.
FULTON COUNTY	FULTON COUNTY.
GREENE COUNTY	GREENE COUNTY.
HAZLETON CITY	HAZLETON CITY IN LUZERNE COUNTY.
HUNTINGDON COUNTY	HUNTINGDON COUNTY.
INDIANA COUNTY	INDIANA COUNTY.
JEFFERSON COUNTY	JEFFERSON COUNTY.
JOHNSTOWN CITY	JOHNSTOWN CITY IN CAMBRIA COUNTY.
JUNIATA COUNTY	JUNIATA COUNTY.
BALANCE OF LACKAWANNA COUNTY	LACKAWANNA COUNTY LESS SCRANTON CITY.
BALANCE OF LUZERNE COUNTY	LUZERNE COUNTY LESS HAZLETON CITY. WILKES-BARRE CITY.
MC KEAN COUNTY	MC KEAN COUNTY.
MCKEESPORT CITY	MCKEESPORT CITY IN ALLEGHENY COUNTY.
MIFFLIN COUNTY	MIFFLIN COUNTY.
MONROE COUNTY	MONROE COUNTY.
NEW CASTLE CITY	NEW CASTLE CITY IN LAWRENCE COUNTY.
NORTHUMBERLAND COUNTY	NORTHUMBERLAND COUNTY.
PHILADELPHIA CITY	PHILADELPHIA CITY IN PHILADELPHIA COUNTY.
POTTER COUNTY	POTTER COUNTY.
READING CITY	READING CITY IN BERKS COUNTY.
SCHUYLKILL COUNTY	SCHUYLKILL COUNTY.
SCRANTON CITY	SCRANTON CITY IN LACKAWANNA COUNTY.
SOMERSET COUNTY	SOMERSET COUNTY.
SULLIVAN COUNTY	SULLIVAN COUNTY.
SUSQUEHANNA COUNTY	SUSQUEHANNA COUNTY.
TIOGA COUNTY	TIOGA COUNTY.
VENANGO COUNTY	VENANGO COUNTY.
WAYNE COUNTY	WAYNE COUNTY.
WILKES-BARRE CITY	WILKES-BARRE CITY IN LUZERNE COUNTY.
WILLIAMSPORT CITY	WILLIAMSPORT CITY IN LYCOMING COUNTY.
WYOMING COUNTY	WYOMING COUNTY.
YORK CITY	YORK CITY IN YORK COUNTY.

LABOR SURPLUS AREAS.—Continued

[October 1, 1999 Through September 30, 2000]

Eligible labor surplus areas	Civil jurisdictions included
PUERTO RICO	
ADJUNTAS MUNICIPIO	ADJUNTAS MUNICIPIO.
AGUADA MUNICIPIO	AGUADA MUNICIPIO.
AGUADILLA MUNICIPIO	AGUADILLA MUNICIPIO.
AGUAS BUENAS MUNICIPIO	AGUAS BUENAS MUNICIPIO.
AIBONITO MUNICIPIO	AIBONITO MUNICIPIO.
ANASCO MUNICIPIO	ANASCO MUNICIPIO.
ARECIBO MUNICIPIO	ARECIBO MUNICIPIO.
ARROYO MUNICIPIO	ARROYO MUNICIPIO.
BARCELONETA MUNICIPIO	BARCELONETA MUNICIPIO.
BARRANQUITAS MUNICIPIO	BARRANQUITAS MUNICIPIO.
BAYAMON MUNICIPIO	BAYAMON MUNICIPIO.
CABO ROJO MUNICIPIO	CABO ROJO MUNICIPIO.
CAGUAS MUNICIPIO	CAGUAS MUNICIPIO.
CAMUY MUNICIPIO	CAMUY MUNICIPIO.
CANOVANAS MUNICIPIO	CANOVANAS MUNICIPIO.
CAROLINA MUNICIPIO	CAROLINA MUNICIPIO.
CATANO MUNICIPIO	CATANO MUNICIPIO.
CAYEY MUNICIPIO	CAYEY MUNICIPIO.
CEIBA MUNICIPIO	CEIBA MUNICIPIO.
CIALES MUNICIPIO	CIALES MUNICIPIO.
CIDRA MUNICIPIO	CIDRA MUNICIPIO.
COAMO MUNICIPIO	COAMO MUNICIPIO.
COMERIO MUNICIPIO	COMERIO MUNICIPIO.
COROZAL MUNICIPIO	COROZAL MUNICIPIO.
CULEBRA MUNICIPIO	CULEBRA MUNICIPIO.
DORADO MUNICIPIO	DORADO MUNICIPIO.
FAJARDO MUNICIPIO	FAJARDO MUNICIPIO.
FLORIDA MUNICIPIO	FLORIDA MUNICIPIO.
GUANICA MUNICIPIO	GUANICA MUNICIPIO.
GUAYAMA MUNICIPIO	GUAYAMA MUNICIPIO.
GUAYANILLA MUNICIPIO	GUAYANILLA MUNICIPIO.
GURABO MUNICIPIO	GURABO MUNICIPIO.
HATILLO MUNICIPIO	HATILLO MUNICIPIO.
HORMIGUEROS MUNICIPIO	HORMIGUEROS MUNICIPIO.
HUMACAO MUNICIPIO	HUMACAO MUNICIPIO.
ISABELA MUNICIPIO	ISABELA MUNICIPIO.
JAYUYA MUNICIPIO	JAYUYA MUNICIPIO.
JUANA DIAZ MUNICIPIO	JUANA DIAZ MUNICIPIO.
JUNCOS MUNICIPIO	JUNCOS MUNICIPIO.
LAJAS MUNICIPIO	LAJAS MUNICIPIO.
LARES MUNICIPIO	LARES MUNICIPIO.
LAS MARIAS MUNICIPIO	LAS MARIAS MUNICIPIO.
LAS PIEDRAS MUNICIPIO	LAS PIEDRAS MUNICIPIO.
LOIZA MUNICIPIO	LOIZA MUNICIPIO.
LUQUILLO MUNICIPIO	LUQUILLO MUNICIPIO.
MANATI MUNICIPIO	MANATI MUNICIPIO.
MARICAO MUNICIPIO	MARICAO MUNICIPIO.
MAUNABO MUNICIPIO	MAUNABO MUNICIPIO.
MAYAGUEZ MUNICIPIO	MAYAGUEZ MUNICIPIO.
MOCA MUNICIPIO	MOCA MUNICIPIO.
MOROVIS MUNICIPIO	MOROVIS MUNICIPIO.
NAGUABO MUNICIPIO	NAGUABO MUNICIPIO.
NARANJITO MUNICIPIO	NARANJITO MUNICIPIO.
OROCOVIS MUNICIPIO	OROCOVIS MUNICIPIO.
PATILLAS MUNICIPIO	PATILLAS MUNICIPIO.
PENUELAS MUNICIPIO	PENUELAS MUNICIPIO.
PONCE MUNICIPIO	PONCE MUNICIPIO.
QUEBRADILLAS MUNICIPIO	QUEBRADILLAS MUNICIPIO.
RINCON MUNICIPIO	RINCON MUNICIPIO.
RIO GRANDE MUNICIPIO	RIO GRANDE MUNICIPIO.
SABANA GRANDE MUNICIPIO	SABANA GRANDE MUNICIPIO.
SALINAS MUNICIPIO	SALINAS MUNICIPIO.
SAN GERMAN MUNICIPIO	SAN GERMAN MUNICIPIO.
SAN JUAN MUNICIPIO	SAN JUAN MUNICIPIO.
SAN LORENZO MUNICIPIO	SAN LORENZO MUNICIPIO.
SAN SEBASTIAN MUNICIPIO	SAN SEBASTIAN MUNICIPIO.
SANTA ISABEL MUNICIPIO	SANTA ISABEL MUNICIPIO.
TOA ALTA MUNICIPIO	TOA ALTA MUNICIPIO.
TOA BAJA MUNICIPIO	TOA BAJA MUNICIPIO.

LABOR SURPLUS AREAS.—Continued

[October 1, 1999 Through September 30, 2000]

Eligible labor surplus areas	Civil jurisdictions included
TRUJILLO ALTO MUNICIPIO	TRUJILLO ALTO MUNICIPIO.
UTUADO MUNICIPIO	UTUADO MUNICIPIO.
VEGA ALTA MUNICIPIO	VEGA ALTA MUNICIPIO.
VEGA BAJA MUNICIPIO	VEGA BAJA MUNICIPIO.
VIEQUES MUNICIPIO	VIEQUES MUNICIPIO.
VILLALBA MUNICIPIO	VILLALBA MUNICIPIO.
YABUCOA MUNICIPIO	YABUCOA MUNICIPIO.
YAUCO MUNICIPIO	YAUCO MUNICIPIO.
RHODE ISLAND	
CENTRAL FALLS CITY	CENTRAL FALLS CITY.
NEW SHOREHAM TOWN	NEW SHOREHAM TOWN.
PAWTUCKET CITY	PAWTUCKET CITY.
PROVIDENCE CITY	PROVIDENCE CITY.
SOUTH CAROLINA	
ALLENDALE COUNTY	ALLENDALE COUNTY.
BAMBERG COUNTY	BAMBERG COUNTY.
BARNWELL COUNTY	BARNWELL COUNTY.
CHESTER COUNTY	CHESTER COUNTY.
CHESTERFIELD COUNTY	CHESTERFIELD COUNTY.
CLARENDON COUNTY	CLARENDON COUNTY.
DARLINGTON COUNTY	DARLINGTON COUNTY.
DILLON COUNTY	DILLON COUNTY.
FAIRFIELD COUNTY	FAIRFIELD COUNTY.
GEORGETOWN COUNTY	GEORGETOWN COUNTY.
LEE COUNTY	LEE COUNTY.
MARION COUNTY	MARION COUNTY.
MARLBORO COUNTY	MARLBORO COUNTY.
MC CORMICK COUNTY	MC CORMICK COUNTY.
ORANGEBURG COUNTY	ORANGEBURG COUNTY.
UNION COUNTY	UNION COUNTY.
WILLIAMSBURG COUNTY	WILLIAMSBURG COUNTY.
SOUTH DAKOTA	
BUFFALO COUNTY	BUFFALO COUNTY.
CORSON COUNTY	CORSON COUNTY.
DEWEY COUNTY	DEWEY COUNTY.
MELLETTE COUNTY	MELLETTE COUNTY.
SHANNON COUNTY	SHANNON COUNTY.
TODD COUNTY	TODD COUNTY.
ZIEBACH COUNTY	ZIEBACH COUNTY.
TENNESSEE	
BENTON COUNTY	BENTON COUNTY.
CAMPBELL COUNTY	CAMPBELL COUNTY.
CANNON COUNTY	CANNON COUNTY.
CARROLL COUNTY	CARROLL COUNTY.
BALANCE OF CARTER COUNTY	CARTER COUNTY LESS JOHNSON CITY.
CLAY COUNTY	CLAY COUNTY.
COCKE COUNTY	COCKE COUNTY.
CROCKETT COUNTY	CROCKETT COUNTY.
CUMBERLAND COUNTY	CUMBERLAND COUNTY.
DE KALB COUNTY	DE KALB COUNTY.
DECATUR COUNTY	DECATUR COUNTY.
FENTRESS COUNTY	FENTRESS COUNTY.
GIBSON COUNTY	GIBSON COUNTY.
GREENE COUNTY	GREENE COUNTY.
GRUNDY COUNTY	GRUNDY COUNTY.
HANCOCK COUNTY	HANCOCK COUNTY.
HARDEMAN COUNTY	HARDEMAN COUNTY.
HARDIN COUNTY	HARDIN COUNTY.
HAYWOOD COUNTY	HAYWOOD COUNTY.
HENDERSON COUNTY	HENDERSON COUNTY.
HENRY COUNTY	HENRY COUNTY.
HICKMAN COUNTY	HICKMAN COUNTY.
HOUSTON COUNTY	HOUSTON COUNTY.

LABOR SURPLUS AREAS.—Continued

[October 1, 1999 Through September 30, 2000]

Eligible labor surplus areas	Civil jurisdictions included
HUMPHREYS COUNTY	HUMPHREYS COUNTY.
JACKSON COUNTY	JACKSON COUNTY.
JOHNSON COUNTY	JOHNSON COUNTY.
LAKE COUNTY	LAKE COUNTY.
LAUDERDALE COUNTY	LAUDERDALE COUNTY.
LAWRENCE COUNTY	LAWRENCE COUNTY.
LEWIS COUNTY	LEWIS COUNTY.
LINCOLN COUNTY	LINCOLN COUNTY.
MACON COUNTY	MACON COUNTY.
MARION COUNTY	MARION COUNTY.
MC MINN COUNTY	MC MINN COUNTY.
MC NAIRY COUNTY	MC NAIRY COUNTY.
MEIGS COUNTY	MEIGS COUNTY.
MONROE COUNTY	MONROE COUNTY.
MORGAN COUNTY	MORGAN COUNTY.
OBION COUNTY	OBION COUNTY.
OVERTON COUNTY	OVERTON COUNTY.
PERRY COUNTY	PERRY COUNTY.
PICKETT COUNTY	PICKETT COUNTY.
POLK COUNTY	POLK COUNTY.
RHEA COUNTY	RHEA COUNTY.
BALANCE OF ROANE COUNTY	ROANE COUNTY LESS OAK RIDGE CITY.
SCOTT COUNTY	SCOTT COUNTY.
SEQUATCHIE COUNTY	SEQUATCHIE COUNTY.
SEVIER COUNTY	SEVIER COUNTY.
STEWART COUNTY	STEWART COUNTY.
TROUSDALE COUNTY	TROUSDALE COUNTY.
UNICOI COUNTY	UNICOI COUNTY.
VAN BUREN COUNTY	VAN BUREN COUNTY.
WARREN COUNTY	WARREN COUNTY.
WAYNE COUNTY	WAYNE COUNTY.
WHITE COUNTY	WHITE COUNTY.
TEXAS	
ANDREWS COUNTY	ANDREWS COUNTY.
ARANSAS COUNTY	ARANSAS COUNTY.
BAILEY COUNTY	BAILEY COUNTY.
BEAUMONT CITY	BEAUMONT CITY IN JEFFERSON COUNTY.
BALANCE OF BOWIE COUNTY	BOWIE COUNTY LESS TEXARKANA CITY TEX.
BALANCE OF BRAZORIA COUNTY	BRAZORIA COUNTY LESS LAKE JACKSON CITY.
BROOKS COUNTY	BROOKS COUNTY.
BROWNSVILLE CITY	BROWNSVILLE CITY IN CAMERON COUNTY.
CALHOUN COUNTY	CALHOUN COUNTY.
BALANCE OF CAMERON COUNTY	CAMERON COUNTY LESS BROWNSVILLE CITY, HARLINGEN CITY.
CAMP COUNTY	CAMP COUNTY.
CASS COUNTY	CASS COUNTY.
COLEMAN COUNTY	COLEMAN COUNTY.
CORPUS CHRISTI CITY	CORPUS CHRISTI CITY IN NUECES COUNTY.
COTTLE COUNTY	COTTLE COUNTY.
CROSBY COUNTY	CROSBY COUNTY.
CULBERSON COUNTY	CULBERSON COUNTY.
DAWSON COUNTY	DAWSON COUNTY.
DEAF SMITH COUNTY	DEAF SMITH COUNTY.
DEL RIO CITY	DEL RIO CITY IN VAL VERDE COUNTY.
DIMMIT COUNTY	DIMMIT COUNTY.
DUVAL COUNTY	DUVAL COUNTY.
BALANCE OF ECTOR COUNTY	ECTOR COUNTY LESS ODESSA CITY.
EDINBURG CITY	EDINBURG CITY IN HIDALGO COUNTY.
EDWARDS COUNTY	EDWARDS COUNTY.
EL PASO CITY	EL PASO CITY IN EL PASO COUNTY.
BALANCE OF EL PASO COUNTY	EL PASO COUNTY LESS EL PASO CITY, SOCORRO CITY.
FLOYD COUNTY	FLOYD COUNTY.
FRIO COUNTY	FRIO COUNTY.
GALVESTON CITY	GALVESTON CITY IN GALVESTON COUNTY.
BALANCE OF GALVESTON COUNTY	GALVESTON COUNTY LESS FRIENDSWOOD CITY, GALVESTON CITY, LEAGUE CITY, TEXAS CITY.
GARZA COUNTY	GARZA COUNTY.
BALANCE OF GREGG COUNTY	GREGG COUNTY LESS LONGVIEW CITY.
HALE COUNTY	HALE COUNTY.
HALL COUNTY	HALL COUNTY.

LABOR SURPLUS AREAS.—Continued

[October 1, 1999 Through September 30, 2000]

Eligible labor surplus areas	Civil jurisdictions included
HARDIN COUNTY	HARDIN COUNTY.
HARLINGEN CITY	HARLINGEN CITY IN CAMERON COUNTY.
BALANCE OF HARRISON COUNTY	HARRISON COUNTY LESS LONGVIEW CITY.
BALANCE OF HIDALGO COUNTY	HIDALGO COUNTY LESS EDINBURG CITY, MC ALLEN CITY, MISSION CITY, PHARR CITY.
HUTCHINSON COUNTY	HUTCHINSON COUNTY.
JASPER COUNTY	JASPER COUNTY.
JIM HOGG COUNTY	JIM HOGG COUNTY.
JIM WELLS COUNTY	JIM WELLS COUNTY.
KILLEEN CITY	KILLEEN CITY IN BELL COUNTY.
KING COUNTY	KING COUNTY.
KINGSVILLE CITY	KINGSVILLE CITY IN KLEBERG COUNTY.
KINNEY COUNTY	KINNEY COUNTY.
BALANCE OF KLEBERG COUNTY	KLEBERG COUNTY LESS KINGSVILLE CITY.
LA SALLE COUNTY	LA SALLE COUNTY.
LAMAR COUNTY	LAMAR COUNTY.
LAMB COUNTY	LAMB COUNTY.
LAREDO CITY	LAREDO CITY IN WEBB COUNTY.
LEON COUNTY	LEON COUNTY.
LIBERTY COUNTY	LIBERTY COUNTY.
LONGVIEW CITY	LONGVIEW CITY IN GREGG COUNTY, HARRISON COUNTY.
LOVING COUNTY	LOVING COUNTY.
MARION COUNTY	MARION COUNTY.
MATAGORDA COUNTY	MATAGORDA COUNTY.
MAVERICK COUNTY	MAVERICK COUNTY.
MC ALLEN CITY	MC ALLEN CITY IN HIDALGO COUNTY.
MC CULLOCH COUNTY	MC CULLOCH COUNTY.
MISSION CITY	MISSION CITY IN HIDALGO COUNTY.
MITCHELL COUNTY	MITCHELL COUNTY.
MORRIS COUNTY	MORRIS COUNTY.
NEWTON COUNTY	NEWTON COUNTY.
NOLAN COUNTY	NOLAN COUNTY.
BALANCE OF NUECES COUNTY	NUECES COUNTY LESS CORPUS CHRISTI CITY.
ODESSA CITY	ODESSA CITY IN ECTOR COUNTY.
ORANGE COUNTY	ORANGE COUNTY.
PALO PINTO COUNTY	PALO PINTO COUNTY.
PANOLA COUNTY	PANOLA COUNTY.
PECOS COUNTY	PECOS COUNTY.
PHARR CITY	PHARR CITY IN HIDALGO COUNTY.
POLK COUNTY	POLK COUNTY.
PORT ARTHUR CITY	PORT ARTHUR CITY IN JEFFERSON COUNTY.
PRESIDIO COUNTY	PRESIDIO COUNTY.
RED RIVER COUNTY	RED RIVER COUNTY.
REEVES COUNTY	REEVES COUNTY.
RUSK COUNTY	RUSK COUNTY.
SABINE COUNTY	SABINE COUNTY.
SAN AUGUSTINE COUNTY	SAN AUGUSTINE COUNTY.
SAN PATRICIO COUNTY	SAN PATRICIO COUNTY.
SHELBY COUNTY	SHELBY COUNTY.
SOCORRO CITY	SOCORRO CITY IN EL PASO COUNTY.
SOMERVELL COUNTY	SOMERVELL COUNTY.
STARR COUNTY	STARR COUNTY.
TERRELL COUNTY	TERRELL COUNTY.
TERRY COUNTY	TERRY COUNTY.
TEXARKANA CITY	TEX TEXARKANA CITY, TEX IN BOWIE COUNTY.
TEXAS CITY	TEXAS CITY IN GALVESTON COUNTY.
TITUS COUNTY	TITUS COUNTY.
TYLER CITY	TYLER CITY IN SMITH COUNTY.
TYLER COUNTY	TYLER COUNTY.
UPSHUR COUNTY	UPSHUR COUNTY.
UVALDE COUNTY	UVALDE COUNTY.
BALANCE OF VAL VERDE COUNTY	VAL VERDE COUNTY LESS DEL RIO CITY.
WARD COUNTY	WARD COUNTY.
BALANCE OF WEBB COUNTY	WEBB COUNTY LESS LAREDO CITY.
WILLACY COUNTY	WILLACY COUNTY.
WINKLER COUNTY	WINKLER COUNTY.
YOAKUM COUNTY	YOAKUM COUNTY.
YOUNG COUNTY	YOUNG COUNTY.
ZAPATA COUNTY	ZAPATA COUNTY.
ZAVALA COUNTY	ZAVALA COUNTY.

LABOR SURPLUS AREAS.—Continued

[October 1, 1999 Through September 30, 2000]

Eligible labor surplus areas	Civil jurisdictions included
UTAH	
DUCHESNE COUNTY	DUCHESNE COUNTY.
EMERY COUNTY	EMERY COUNTY.
GARFIELD COUNTY	GARFIELD COUNTY.
GRAND COUNTY	GRAND COUNTY.
OGDEN CITY	OGDEN CITY IN WEBER COUNTY.
SAN JUAN COUNTY	SAN JUAN COUNTY.
VERMONT	
ESSEX COUNTY	ESSEX COUNTY.
ORLEANS COUNTY	ORLEANS COUNTY.
VIRGINIA	
ACCOMACK COUNTY	ACCOMACK COUNTY.
BATH COUNTY	BATH COUNTY.
BUCHANAN COUNTY	BUCHANAN COUNTY.
CAROLINE COUNTY	CAROLINE COUNTY.
CLIFTON FORGE CITY	CLIFTON FORGE CITY.
COVINGTON CITY	COVINGTON CITY.
DANVILLE CITY	DANVILLE CITY.
DICKENSON COUNTY	DICKENSON COUNTY.
ESSEX COUNTY	ESSEX COUNTY.
GILES COUNTY	GILES COUNTY.
HALIFAX COUNTY	HALIFAX COUNTY.
LANCASTER COUNTY	LANCASTER COUNTY.
LEE COUNTY	LEE COUNTY.
LOUISA COUNTY	LOUISA COUNTY.
LUNENBURG COUNTY	LUNENBURG COUNTY.
NORFOLK CITY	NORFOLK CITY.
NORTHAMPTON COUNTY	NORTHAMPTON COUNTY.
NORTHUMBERLAND COUNTY	NORTHUMBERLAND COUNTY.
NORTON CITY	NORTON CITY.
PETERSBURG CITY	PETERSBURG CITY.
PORTSMOUTH CITY	PORTSMOUTH CITY.
PRINCE EDWARD COUNTY	PRINCE EDWARD COUNTY.
RUSSELL COUNTY	RUSSELL COUNTY.
SCOTT COUNTY	SCOTT COUNTY.
SMYTH COUNTY	SMYTH COUNTY.
SURRY COUNTY	SURRY COUNTY.
TAZEWELL COUNTY	TAZEWELL COUNTY.
WESTMORELAND COUNTY	WESTMORELAND COUNTY.
WILLIAMSBURG CITY	WILLIAMSBURG CITY.
WISE COUNTY	WISE COUNTY.
WASHINGTON	
ADAMS COUNTY	ADAMS COUNTY.
BALANCE OF BENTON COUNTY	BENTON COUNTY LESS KENNEWICK CITY, RICHLAND CITY.
BREMERTON CITY	BREMERTON CITY IN KITSAP COUNTY.
CHELAN COUNTY	CHELAN COUNTY.
CLALLAM COUNTY	CLALLAM COUNTY .
COLUMBIA COUNTY	COLUMBIA COUNTY.
BALANCE OF COWLITZ COUNTY	COWLITZ COUNTY LESS LONGVIEW CITY.
DOUGLAS COUNTY	DOUGLAS COUNTY.
FERRY COUNTY	FERRY COUNTY.
FRANKLIN COUNTY	FRANKLIN COUNTY.
GRANT COUNTY	GRANT COUNTY.
GRAYS HARBOR COUNTY	GRAYS HARBOR COUNTY.
JEFFERSON COUNTY	JEFFERSON COUNTY.
KENNEWICK CITY	KENNEWICK CITY IN BENTON COUNTY.
KITTITAS COUNTY	KITTITAS COUNTY.
KLICKITAT COUNTY	KLICKITAT COUNTY.
LAKEWOOD CITY	LAKEWOOD CITY IN PIERCE COUNTY.
LEWIS COUNTY	LEWIS COUNTY.
LONGVIEW CITY	LONGVIEW CITY IN COWLITZ COUNTY.
MASON COUNTY	MASON COUNTY.
OKANOGAN COUNTY	OKANOGAN COUNTY.
PACIFIC COUNTY	PACIFIC COUNTY.

LABOR SURPLUS AREAS.—Continued

[October 1, 1999 Through September 30, 2000]

Eligible labor surplus areas	Civil jurisdictions included
PEND OREILLE COUNTY	PEND OREILLE COUNTY.
SKAGIT COUNTY	SKAGIT COUNTY.
SKAMANIA COUNTY	SKAMANIA COUNTY.
STEVENS COUNTY	STEVENS COUNTY.
WAHKIAKUM COUNTY	WAHKIAKUM COUNTY.
WALLA WALLA CITY	WALLA WALLA CITY IN WALLA WALLA COUNTY.
YAKIMA CITY	YAKIMA CITY IN YAKIMA COUNTY.
BALANCE OF YAKIMA COUNTY	YAKIMA COUNTY LESS YAKIMA CITY.
WEST VIRGINIA	
BARBOUR COUNTY	BARBOUR COUNTY.
BOONE COUNTY	BOONE COUNTY.
BRAXTON COUNTY	BRAXTON COUNTY.
BROOKE COUNTY	BROOKE COUNTY.
CALHOUN COUNTY	CALHOUN COUNTY.
CLAY COUNTY	CLAY COUNTY.
DODDRIDGE COUNTY	DODDRIDGE COUNTY.
FAYETTE COUNTY	FAYETTE COUNTY.
GILMER COUNTY	GILMER COUNTY.
GRANT COUNTY	GRANT COUNTY.
GREENBRIER COUNTY	GREENBRIER COUNTY.
HANCOCK COUNTY	HANCOCK COUNTY.
HARRISON COUNTY	HARRISON COUNTY.
HUNTINGTON CITY	HUNTINGTON CITY IN CABELL COUNTY, WAYNE COUNTY.
JACKSON COUNTY	JACKSON COUNTY.
LEWIS COUNTY	LEWIS COUNTY.
LINCOLN COUNTY	LINCOLN COUNTY.
LOGAN COUNTY	LOGAN COUNTY.
MARION COUNTY	MARION COUNTY.
BALANCE OF MARSHALL COUNTY	MARSHALL COUNTY LESS WHEELING CITY.
MASON COUNTY	MASON COUNTY.
MC DOWELL COUNTY	MC DOWELL COUNTY.
MINERAL COUNTY	MINERAL COUNTY.
MINGO COUNTY	MINGO COUNTY.
NICHOLAS COUNTY	NICHOLAS COUNTY.
PARKERSBURG CITY	PARKERSBURG CITY IN WOOD COUNTY.
PLEASANTS COUNTY	PLEASANTS COUNTY.
POCAHONTAS COUNTY	POCAHONTAS COUNTY.
PRESTON COUNTY	PRESTON COUNTY.
RALEIGH COUNTY	RALEIGH COUNTY.
RANDOLPH COUNTY	RANDOLPH COUNTY.
RITCHIE COUNTY	RITCHIE COUNTY.
ROANE COUNTY	ROANE COUNTY.
SUMMERS COUNTY	SUMMERS COUNTY.
TAYLOR COUNTY	TAYLOR COUNTY.
TUCKER COUNTY	TUCKER COUNTY.
TYLER COUNTY	TYLER COUNTY.
UPSHUR COUNTY	UPSHUR COUNTY.
BALANCE OF WAYNE COUNTY	WAYNE COUNTY LESS HUNTINGTON CITY.
WEBSTER COUNTY	WEBSTER COUNTY.
WETZEL COUNTY	WETZEL COUNTY.
WIRT COUNTY	WIRT COUNTY.
WYOMING COUNTY	WYOMING COUNTY.
WISCONSIN	
ASHLAND COUNTY	ASHLAND COUNTY.
BAYFIELD COUNTY	BAYFIELD COUNTY.
CLARK COUNTY	CLARK COUNTY.
FLORENCE COUNTY	FLORENCE COUNTY.
FOREST COUNTY	FOREST COUNTY.
IRON COUNTY	IRON COUNTY.
JUNEAU COUNTY	JUNEAU COUNTY.
LANGLADE COUNTY	LANGLADE COUNTY.
MARQUETTE COUNTY	MARQUETTE COUNTY.
MENOMINEE COUNTY	MENOMINEE COUNTY.
RACINE CITY	RACINE CITY IN RACINE COUNTY.
RUSK COUNTY	RUSK COUNTY.
SAWYER COUNTY	SAWYER COUNTY.

LABOR SURPLUS AREAS.—Continued

[October 1, 1999 Through September 30, 2000]

Eligible labor surplus areas	Civil jurisdictions included
WASHBURN COUNTY	WASHBURN COUNTY.
WYOMING	
BIG HORN COUNTY	BIG HORN COUNTY.
FREMONT COUNTY	FREMONT COUNTY.
LINCOLN COUNTY	LINCOLN COUNTY.
BALANCE OF NATRONA COUNTY	NATRONA COUNTY LESS CASPER CITY.

[FR Doc. 99–26963 Filed 10–14–99; 8:45 am]

BILLING CODE 4510–30–P

DEPARTMENT OF LABOR

Employment Standards Administration

Wage and Hour Division

Minimum Wages for Federal and Federally Assisted Construction; General Wage Determination Decisions

General wage determination decisions of the Secretary of Labor are issued in accordance with applicable law and are based on the information obtained by the Department of Labor from its study of local wage conditions and data made available from other sources. They specify the basic hourly wage rates and fringe benefits which are determined to be prevailing for the described classes of laborers and mechanics employed on construction projects of a similar character and in the localities specified therein.

The determinations in these decisions of prevailing rates and fringe benefits have been made in accordance with 29 CFR Part 1, by authority of the Secretary of Labor pursuant to the provisions of the Davis-Bacon Act of March 3, 1931, as amended (46 Stat. 1494, as amended, 40 U.S.C. 276a) and of other Federal statutes as referred to in 29 CFR part 1, appendix, as well as such additional statutes as may from time to time be enacted containing provisions for the payment of wages determined to be prevailing by the Secretary of Labor in accordance with the Davis-Bacon Act. The prevailing rates and fringe benefits determined in these decisions shall, in accordance with the provisions of the foregoing statutes, constitute the minimum wages payable on Federal and federally assisted construction projects to laborers and mechanics of the specified classes engaged on contract work of the character and in the localities described therein.

Good cause is hereby found for not utilizing notice and public comment procedure thereon prior to the issuance of these determinations as prescribed in 5 U.S.C. 553 and not providing for delay in the effective date as prescribed in that section, because the necessity to issue current construction industry wage determinations frequently and in large volume causes procedures to be impractical and contrary to the public interest.

General wage determination decisions, and modifications and supersedes decisions thereto, contain no expiration dates and are effective from their date of notice in the **Federal Register**, or on the date written notice is received by the agency, whichever is earlier. These decisions are to be used in accordance with the provisions of 29 CFR parts 1 and 5. Accordingly, the applicable decision, together with any modifications issued, must be made a part of every contract for performance of the described work within the geographic area indicated as required by an applicable Federal prevailing wage law and 29 CFR Part 5. The wage rates and fringe benefits, notice of which is published herein, and which are contained in the Government Printing Office (GPO) document entitled ''General Wage Determinations Issued Under The Davis-Bacon And Related Acts,'' shall be the minimum paid by contractors and subcontractors to laborers and mechanics.

Any person, organization, or governmental agency having an interest in the rates determined as prevailing is encouraged to submit wage rate and fringe benefit information for consideration by the Department. Further information and self-explanatory forms for the purpose of submitting this data may be obtained by writing to the U.S. Department of Labor, Employment Standards Administration, Wage and Hour Division, Division of Wage Determinations, 200 Constitution Avenue, NW, Room S–3014, Washington, DC 20210.

New General Wage Determination Decision

The number of the decisions added to the Government Printing Office document entitled ''General Wage Determinations Issued Under the Davis-Bacon and Related Acts'' are listed by Volume and States:

Volume III

South Carolina
SC990037 (Oct. 15, 1999)

Modifications to General Wage Determination Decisions

The number of decisions listed in the Government Printing Office document entitled ''General Wage Determinations Issued Under the Davis-Bacon and Related Acts'' being modified are listed by Volume and State. Dates of publication in the **Federal Register** are in parentheses following the decisions being modified.

Volume I

New York
NY990003 (Mar. 12, 1999)

Volume II

District of Columbia
DC990001 (Mar. 12, 1999)
DC990002 (Mar. 12, 1999)
Pennsylvania
PA990005 (Mar. 12, 1999)
PA990006 (Mar. 12, 1999)
PA990026 (Mar. 12, 1999)

Volume III

Florida
FL990017 (Mar. 12, 1999)
Georgia
GA990004 (Mar. 12, 1999)
GA990022 (Mar. 12, 1999)
GA990050 (Mar. 12, 1999)
GA990073 (Mar. 12, 1999)
GA990086 (Mar. 12, 1999)
GA990087 (Mar. 12, 1999)
GA990088 (Mar. 12, 1999)
*South Carolina
SC990019 (Mar. 12, 1999)
*As of October 15, 1999, SC990019 no longer includes Richland County. See SC990037.

Volume IV

Indiana

IN 990027 (Mar. 12, 1999)
Michigan
MI990001 (Mar. 12, 1999)
MI990002 (Mar. 12, 1999)
MI990003 (Mar. 12, 1999)
MI990004 (Mar. 12, 1999)
MI990005 (Mar. 12, 1999)
MI990007 (Mar. 12, 1999)
MI990012 (Mar. 12, 1999)
MI990017 (Mar. 12, 1999)
MI990030 (Mar. 12, 1999)
MI990031 (Mar. 12, 1999)
MI990046 (Mar. 12, 1999)
MI990047 (Mar. 12, 1999)
MI990060 (Mar. 12, 1999)
MI990062 (Mar. 12, 1999)
MI990063 (Mar. 12, 1999)

Volume V

Iowa
IA990005 (Mar. 12, 1999)
IA990006 (Mar. 12, 1999)
IA990007 (Mar. 12, 1999)
IA990010 (Mar. 12, 1999)
IA990013 (Mar. 12, 1999)
IA990016 (Mar. 12, 1999)
IA990019 (Mar. 12, 1999)
IA990024 (Mar. 12, 1999)
IA990025 (Mar. 12, 1999)
IA990029 (Mar. 12, 1999)
IA990032 (Mar. 12, 1999)
IA990038 (Mar. 12, 1999)
IA990067 (Mar. 12, 1999)
IA990070 (Mar. 12, 1999)
IA990072 (Mar. 12, 1999)
IA990079 (Mar. 12, 1999)
IA990080 (Mar. 12, 1999)
Nebraska
NE990003 (Mar. 12, 1999)
NE990009 (Mar. 12, 1999)
NE990011 (Mar. 12, 1999)
Texas
TX990009 (Mar. 12, 1999)
TX990018 (Mar. 12, 1999)
TX990100 (Mar. 12, 1999)
TX990144 (Mar. 12, 1999)

Volume VI

None

Volume VII

California
CA990002 (Mar. 12, 1999)
CA990004 (Mar. 12, 1999)
CA990009 (Mar. 12, 1999)
CA990029 (Mar. 12, 1999)
CA990030 (Mar. 12, 1999)
CA990031 (Mar. 12, 1999)
CA990032 (Mar. 12, 1999)
CA990033 (Mar. 12, 1999)
CA990034 (Mar. 12, 1999)
CA990035 (Mar. 12, 1999)
CA990036 (Mar. 12, 1999)
CA990037 (Mar. 12, 1999)
CA990038 (Mar. 12, 1999)
CA990039 (Mar. 12, 1999)
CA990040 (Mar. 12, 1999)
CA990041 (Mar. 12, 1999)

General Wage Determination Publication

General wage determinations issued under the Davis-Bacon and related Acts, including those noted above, may be found in the Government Printing Office (GPO) document entitled ''General Wage Determinations Issued Under The Davis-Bacon and Related Acts.'' This publication is available at each of the 50 Regional Government Depository Libraries and many of the 1,400 Government Depository Libraries across the country.

The general wage determinations issued under the Davis-Bacon and related Acts are available electronically by subscription to the FedWorld Bulletin Board System of the National Technical Information Service (NTIS) of the U.S. Department of Commerce at 1–800–363–2068

Hard-copy subscriptions may be purchased from: Superintendent of Documents, U.S. Government Printing Office, Washington, D.C. 20402, (202) 512–1800.

When ordering hard-copy subscription(s), be sure to specify the State(s) of interest, since subscriptions may be ordered for any or all of the seven separate volumes, arranged by State. Subscriptions include an annual edition (issued in January or February) which includes all current general wage determinations for the States covered by each volume. Throughout the remainder of the year, regular weekly updates are distributed to subscribers.

Signed at Washington, D.C. this 7th day of October 1999.

Carl J. Poleskey,

Chief, Branch of Construction Wage Determinations.

[FR Doc. 99–26769 Filed 10–14–99; 8:45 am]

BILLING CODE 4510–27–M

NATIONAL FOUNDATION ON THE ARTS AND THE HUMANITIES

National Endowment for the Arts

Leadership Initiatives Advisory Panel

Pursuant to Section 10(a)(2) of the Federal Advisory Committee Act (Public Law 92–463), as amended, notice is hereby given that a meeting of the Leadership Initiatives Advisory Panel (Literature Section) to the National Council on the Arts will be held on October 25, 1999. The panel will meet from 11:30 a.m. to 12:00 p.m. via teleconference from room 704 at the Nancy Hanks Center, 1100 Pennsylvania Avenue, NW, Washington, D.C. 20506.

This meeting is for the purpose of Panel review, discussion, evaluation, and recommendations on financial assistance under the National Foundation on the Arts and the Humanities Act of 1965, as amended, including information given in confidence to the agency. In accordance with the determination of the chairman of May 12, 1999, these sessions will be closed to the public pursuant to subsection (c)(4), (6) and (9)(B) of section 552b of Title 5, United States Code.

Further information with reference to this meeting can be obtained from Ms. Kathy Plowitz-Worden, Panel Coordinator, National Endowment for the Arts, Washington, D.C. 20506, or call (202) 682–5691.

Dated: October 12, 1999.

Kathy Plowitz-Worden,

Panel Coordinator, National Endowment for the Arts.

[FR Doc. 99–27093 Filed 10–14–99; 8:45 am]

BILLING CODE 7537–01–M

NUCLEAR REGULATORY COMMISSION

[Docket No. 50–247]

Consolidated Edison Company of New York, Inc; Facility Operating License No. DPR 26; Receipt of Petition for Director's Decision Under 10 CFR 2.206

Notice is hereby given that by petition dated September 15, 1999, Mr. David A. Lochbaum, on behalf of the Union of Concerned Scientists (Petitioner), has requested that the U.S. Nuclear Regulatory Commission (NRC) take action with regard to the Indian Point Nuclear Generating Unit No. 2, owned and operated by the Consolidated Edison Company of New York, Inc. The Petitioner requests that the NRC take enforcement action to modify or suspend the operating license for the Indian Point Nuclear Generating Unit No. 2, operated by the Consolidated Edison Company of New York, Inc. (the licensee), to prevent the reactor from resuming operation until the five issues identified in the attachment to the Petition have been fully resolved. As an acceptable alternative in lieu of a suspension or modification of the license, the Petitioner requested that the NRC issue a confirmatory action letter or an order requiring these issues to be fully resolved before unit restart. The five issues that were raised in the Petition are (1) the apparent violation of station battery design and licensing bases, (2) the apparent failure to adequately correct circuit breaker problems, (3) the apparent unreliability of emergency diesel generators, (4) the potentially unjustified license amendment for undervoltage and degraded voltage relay surveillance intervals, and (5) the apparent errors and nonconservatisms in individual plant examinations (IPEs). Along with

the last issue, the Petitioner stated that the event on August 31, 1999, at Indian Point Unit 2 revealed potential problems with the plant-specific risk assessment developed by the licensee and now used to establish priorities for maintenance and inspections. Additionally, the Petitioner requested that a public hearing on this Petition be conducted in the vicinity of the plant before its restart is authorized by the NRC. In a transcribed telephone conversation between the Petitioner and the members of the NRC's Petition Review Board on September 22, 1999, the Petitioner clarified two of the issues in the Petition. First, the Petitioner stated that because of an apparent failure to accomplish the commitment in the NRC's safety evaluation for the license amendment mentioned in the Petition, the Petitioner was concerned that past licensing commitments may not have been implemented. Second, the Petitioner questioned whether the amount of time the licensee took to perform certain actions during the August 31 event was consistent with the times expected if a station blackout (SBO) had occurred since many of the procedures and processes in response to an SBO event were used.

As the basis for this request, the Petitioner states that the issues, if valid, have clear and direct safety implications because they involve equipment explicitly required to function to mitigate accidents. With regard to your IPE issue, the Petitioner states that, if valid, it has indirect safety implications because it involves information used by the plant's owner to schedule maintenance and inspections on equipment implicitly required to function to mitigate an accident. The Petitioner also stated that the specific problems revealed by the August 31 event were caused by systematic process breakdowns, including inadequate procedures, inadequate training, and plant configuration errors, and that the licensee's plan does not contain sufficient activities that provide reasonable assurance that problems in other safety systems are identified and corrected.

The request is being treated pursuant to 10 CFR 2.206 of the Commission's regulations. The request has been referred to the Director of the Office of Nuclear Reactor Regulation. As provided by Section 2.206, appropriate action will be taken on this Petition within a reasonable time.

By letter dated October 8, 1999, the Director denied the Petitioner's request for immediate action at Indian Point Unit 2.

A copy of the petition is available for inspection at the Commission's Public Document Room, the Gelman Building, 2120 L Street NW., Washington, DC, and at the local public document room located at the White Plains Public Library, 100 Martine Avenue, White Plains, New York 10610.

Dated at Rockville, Maryland, this 8th day of October 1999.

For the Nuclear Regulatory Commission.

Samuel J. Collins,

Director, Office of Nuclear Reactor Regulation.

[FR Doc. 99–26942 Filed 10–14–99; 8:45 am]

BILLING CODE 7590–01–P

NUCLEAR REGULATORY COMMISSION

[Docket 72–16]

Virginia Electric and Power Company; Issuance of Environmental Assessment and Finding of No Significant Impact Regarding the Proposed Amendment To Revise Technical Specifications of License No. SNM–2507

The U.S. Nuclear Regulatory Commission (NRC or Commission) is considering issuance of an amendment, pursuant to 10 CFR 72.56, to the Special Nuclear Material License No. 2507 (SNM–2507) held by Virginia Electric and Power Company (Virginia Power) for the North Anna independent spent fuel storage installation (ISFSI). The requested amendment would revise the Technical Specifications of SNM–2507 to specifically permit the storage of burnable poison rod assemblies (BPRA) and thimble plug devices (TPD) within the TN–32 casks used at the North Anna ISFSI.

Environmental Assessment

Identification of Proposed Action

By letter dated April 5, 1999, as supplemented by letter dated August 27, 1999, Virginia Power requested an amendment to revise the Technical Specifications of SNM–2507 for the North Anna ISFSI. The changes to the Technical Specifications would specifically permit the storage of BPRAs and/or TPDs within the TN–32 dry storage casks used at the North Anna ISFSI.

Need for the Proposed Action

The proposed action will eliminate the need to physically remove BPRAs and TPDs from irradiated fuel assemblies prior to dry cask storage which would result in one consolidated source of radioactive material and reduce exposure time to plant workers during loadings.

Environmental Impacts of the Proposed Action

The NRC has completed its evaluation of the proposed action and concludes that granting the request for amendment to specifically allow the storage of BPRAs and TPDs within the TN–32 casks used at the North Anna ISFSI will not increase the probability or consequences of accidents. No changes are being made in the types of any effluents that may be released off site. With regard to radiological impacts, the addition of irradiated BPRAs and TPDs only affects the gamma source term of the cask. In the previous shielding analysis, the calculated cask surface dose rate from the design basis contents was increased by an expansion factor before calculating the estimated offsite dose to allow for future increases in fuel burnup and enrichment and possible variations in cask design. For this amendment, the Virginia Power's calculated increase in surface dose rate resulting from the added BPRAs and TPDs remains within the bounds of the previous analysis with the expansion factor and, consequently, results in no significant increase in occupational or public radiation exposure. Therefore, there are no significant radiological environmental impacts associated with the proposed action.

The amendment only affects the requirements associated with the contents of the casks and does not affect non-radiological plant effluents or any other aspects of the environment. Therefore, there are no significant non-radiological environmental impacts associated with the proposed action.

Accordingly, the Commission concludes that there are no significant environmental impacts associated with the proposed action.

Alternative to the Proposed Action

The alternative to the proposed action would be to deny the request for amendment (*i.e.*, the ''no-action'' alternative). Denial of the proposed action would result in the need to physically remove BPRAs and TPDs from each fuel assembly possessing them prior to the loading of that assembly into dry cask storage. Physical removal of irradiated BPRAs and TPDs would increase the exposure time and dose to the plant workers. In addition, it would require disposal or storage of additional radioactive material (*i.e.*, BPRAs and TPDs) that would otherwise be safely stored if the BPRAs and TPDs are left intact with their irradiated fuel assembly and loaded into dry cask

storage. The environmental impacts of the alternative action are greater than the proposed action.

Given that there are greater environmental impacts associated with the alternative action of denying the request for amendment, the Commission concludes that the preferred alternative is to grant this amendment.

Agencies and Persons Consulted

On September 27, 1999, Mr. Les Foldese of the Virginia Department of Health, Bureau of Radiological Health, was contacted in regard to the proposed action and had no concerns.

Finding of No Significant Impact

The environmental impacts of the proposed action have been reviewed in accordance with the requirements set forth in 10 CFR part 51. Based upon the foregoing Environmental Assessment, the Commission finds that the proposed action of granting an amendment to permit the storage of BPRAs and TPDs within the TN–32 casks used at the North Anna ISFSI will not significantly impact the quality of the human environment. Accordingly, the Commission has determined not to prepare an environmental impact statement for the proposed amendment.

For further details with respect to this action, see the amendment application dated April 5, 1999, as supplemented on August 27, 1999. These documents are available for public inspection at the Commission's Public Document Room, 2120 L Street, NW, Washington, DC 20555 and the Local Public Document Room at the University of Virginia Alderman Library, Charlottesville, VA 22903.

Dated at Rockville, Maryland, this 7th day of October 1999.

For The Nuclear Regulatory Commission.

E. William Brach,

Director, Spent Fuel Project Office, Office of Nuclear Material Safety and Safeguards.

[FR Doc. 99–26940 Filed 10–14–99; 8:45 am]

BILLING CODE 7590–01–P

NUCLEAR REGULATORY COMMISSION

[Docket 72–2]

Virginia Electric and Power Company; Issuance of Environmental Assessment and Finding of No Significant Impact Regarding the Proposed Amendment To Revise Technical Specifications of License No. SNM–2501

The U.S. Nuclear Regulatory Commission (NRC or Commission) is considering issuance of an amendment, pursuant to 10 CFR 72.56, to the Special Nuclear Material License No. 2501 (SNM–2501) held by Virginia Electric and Power Company (Virginia Power) for the Surry independent spent fuel storage installation (ISFSI). The requested amendment would revise the Technical Specifications of SNM–2501 to specifically permit the storage of burnable poison rod assemblies (BPRA) and thimble plug devices (TPD) within the TN–32 casks used at the Surry ISFSI.

Environmental Assessment

Identification of Proposed Action

By letter dated April 5, 1999, as supplemented by letter dated August 27, 1999, Virginia Power requested an amendment to revise the Technical Specifications of SNM–2501 for the Surry ISFSI. The changes to the Technical Specifications would specifically permit the storage of BPRAs and/or TPDs within the TN–32 dry storage casks used at the Surry ISFSI.

Need for the Proposed Action

The proposed action will eliminate the need to physically remove BPRAs and TPDs from irradiated fuel assemblies prior to dry cask storage which would result in one consolidated source of radioactive material and reduce the exposure time to plant workers during loadings.

Environmental Impacts of the Proposed Action

The NRC has completed its evaluation of the proposed action and concludes that granting the request for amendment to specifically allow the storage of BPRAs and TPDs within the TN–32 casks used at the Surry ISFSI will not increase the probability or consequences of accidents. No changes are being made in the types of any effluents that may be released off site. With regard to radiological impacts, the addition of irradiated BPRAs and TPDs only affects the gamma source term of the cask. In the previous shielding analysis, the calculated cask surface dose rate from the design basis contents was increased by an expansion factor before calculating the estimated offsite dose to allow for future increases in fuel burnup and enrichment and possible variations in cask design. For this amendment, the Virginia Power's calculated increase in surface dose rate resulting from the added BPRAs and TPDs remains within the bounds of the previous analysis with the expansion factor and, consequently, results in no significant increase in occupational or public radiation exposure. Therefore, there are no significant radiological environmental impacts associated with the proposed action.

The amendment only affects the requirements associated with the contents of the casks and does not affect non-radiological plant effluents or any other aspects of the environment. Therefore, there are no significant non-radiological environmental impacts associated with the proposed action.

Accordingly, the Commission concludes that there are no significant environmental impacts associated with the proposed action.

Alternative to the Proposed Action

The alternative to the proposed action would be to deny the request for amendment *(i.e.,* the ''no-action'' alternative). Denial of the proposed action would result in the need to physically remove BPRAs and TPDs from each fuel assembly possessing them prior to the loading of that assembly into dry cask storage. Physical removal of irradiated BPRAs and TPDs would increase the exposure time and dose to the plant workers. In addition, it would require disposal or storage of additional radioactive material *(i.e.,* BPRAs and TPDs) that would otherwise be safely stored if the BPRAs and TPDs are left intact with their irradiated fuel assembly and loaded into dry cask storage. The environmental impacts of the alternative action are greater than the proposed action.

Given that there are greater environmental impacts associated with the alternative action of denying the request for amendment, the Commission concludes that the preferred alternative is to grant this amendment.

Agencies and Persons Consulted

On September 27, 1999, Mr. Les Foldese of the Virginia Department of Health, Bureau of Radiological Health, was contacted in regard to the proposed action and had no concerns.

Finding of No Significant Impact

The environmental impacts of the proposed action have been reviewed in accordance with the requirements set forth in 10 CFR Part 51. Based upon the foregoing Environmental Assessment, the Commission finds that the proposed action of granting an amendment to permit the storage of BPRAs and TPDs within the TN–32 casks used at the Surry ISFSI will not significantly impact the quality of the human environment. Accordingly, the Commission has determined not to prepare an environmental impact statement for the proposed amendment.

For further details with respect to this action, see the amendment application

dated April 5, 1999, as supplemented on August 27, 1999. These documents are available for public inspection at the Commission's Public Document Room, 2120 L Street, NW, Washington, DC 20555 and the Local Public Document Room at the Swem Library, the College of William and Mary, Williamsburg, VA 23185.

Dated at Rockville, Maryland, this 7th day of October 1999.

For the Nuclear Regulatory Commission.

E. William Brach,

Director, Spent Fuel Project Office, Office of Nuclear Material Safety and Safeguards.

[FR Doc. 99–26941 Filed 10–14–99; 8:45 am]

BILLING CODE 7590–01–U

NUCLEAR REGULATORY COMMISSION

Products and Results of Research at the Organization for Economic Cooperation and Development (OECD) Halden Reactor Project

AGENCY: Nuclear Regulatory Commission.

ACTION: Notice of seminar.

SUMMARY: The NRC has committed through its Strategic Plan to conduct confirmatory and anticipatory research on issues of potential regulatory and safety significance, engage in cooperative, international research agreements, and provide timely information to our stakeholders. As part of this commitment, a seminar has been planned to present on-going research being conducted at the OECD Halden Reactor Project in Norway. The goal of this seminar is to inform our stakeholders of current research activities and to solicit their perspectives and interest in the safety assessment of fuels, materials, and nuclear power plant control room design.

DATE: November 1–2, 1999—The seminar will begin at 12:30 p.m. on November 1st and end at 5 p.m. on November 2nd.

LOCATION: Doubletree Hotel, Twinbrook, Rockville, MD 20852.

CONTACT: Registration—Michael Scott, Phone: (301) 415–5698, e-mail: *mas2@nrc.gov*; General—Julius Persensky, Phone: (301) 415–6759, e-mail: *jjp2@nrc.gov*.

ATTENDANCE: This seminar is free and open to the general public. All individuals planning to attend should preregister with Mr. Michael Scott by telephone or e-mail and provide their name, affiliation, phone number, and e-mail address.

PROGRAM: This seminar describes past and current research results, as well as products and tools that may be useful in a wide range of applications. There will be four sessions covering the following topics.

- Fuels and Materials Research.
- Human Factors Engineering and Control Room Design.
- Virtual Reality Technology.
- Instrumentation and Control Systems and Tools.

Dated in Rockville, Maryland this 7th day of October 1999.

For the Nuclear Regulatory Commission.

Charles E. Rossi,

Director, Division of Systems Analysis and Regulatory Effectiveness.

[FR Doc. 99–26939 Filed 10–14–99; 8:45 am]

BILLING CODE 7590–01–P

PENSION BENEFIT GUARANTY CORPORATION

Interest Assumption for Determining Variable-Rate Premium; Interest on Late Premium Payments; Interest on Underpayments and Overpayments of Single-Employer Plan Termination Liability and Multiemployer Withdrawal Liability; Interest Assumptions for Multiemployer Plan Valuations Following Mass Withdrawal

AGENCY: Pension Benefit Guaranty Corporation.

ACTION: Notice of interest rates and assumptions.

SUMMARY: This notice informs the public of the interest rates and assumptions to be used under certain Pension Benefit Guaranty Corporation regulations. These rates and assumptions are published elsewhere (or are derivable from rates published elsewhere), but are collected and published in this notice for the convenience of the public. Interest rates are also published on the PBGC's web site (http://www.pbgc.gov).

DATES: The interest rate for determining the variable-rate premium under part 4006 applies to premium payment years beginning in October 1999. The interest assumptions for performing multiemployer plan valuations following mass withdrawal under part 4281 apply to valuation dates occurring in November 1999. The interest rates for late premium payments under part 4007 and for underpayments and overpayments of single-employer plan termination liability under part 4062 and multiemployer withdrawal liability under part 4219 apply to interest accruing during the fourth quarter (October through December) of 1999.

FOR FURTHER INFORMATION CONTACT: Harold J. Ashner, Assistant General Counsel, Office of the General Counsel, Pension Benefit Guaranty Corporation, 1200 K Street, NW., Washington, DC 20005, 202–326–4024. (For TTY/TDD users, call the Federal relay service toll-free at 1–800–877–8339 and ask to be connected to 202–326–4024.)

SUPPLEMENTARY INFORMATION:

Variable-Rate Premiums

Section 4006(a)(3)(E)(iii)(II) of the Employee Retirement Income Security Act of 1974 (ERISA) and § 4006.4(b)(1) of the PBGC's regulation on Premium Rates (29 CFR part 4006) prescribe use of an assumed interest rate in determining a single-employer plan's variable-rate premium. The rate is the ''applicable percentage'' (currently 85 percent) of the annual yield on 30-year Treasury securities for the month preceding the beginning of the plan year for which premiums are being paid (the ''premium payment year''). The yield figure is reported in Federal Reserve Statistical Releases G.13 and H.15.

The assumed interest rate to be used in determining variable-rate premiums for premium payment years beginning in October 1999 is 5.16 percent *(i.e.*, 85 percent of the 6.07 percent yield figure for September 1999).

The following table lists the assumed interest rates to be used in determining variable-rate premiums for premium payment years beginning between November 1998 and October 1999.

For premium payment years beginning in	The assumed interest rate is
November 1998	4.26
December 1998	4.46
January 1999	4.30
February 1999	4.39
March 1999	4.56
April 1999	4.74
May 1999	4.72
June 1999	4.94
July 1999	5.13
August 1999	5.08
September 1999	5.16
October 1999	5.16

Late Premium Payments; Underpayments and Overpayments of Single-Employer Plan Termination Liability

Section 4007(b) of ERISA and § 4007.7(a) of the PBGC's regulation on Payment of Premiums (29 CFR part 4007) require the payment of interest on late premium payments at the rate established under section 6601 of the Internal Revenue Code. Similarly, § 4062.7 of the PBGC's regulation on

Liability for Termination of Single-employer Plans (29 CFR part 4062) requires that interest be charged or credited at the section 6601 rate on underpayments and overpayments of employer liability under section 4062 of ERISA. The section 6601 rate is established periodically (currently quarterly) by the Internal Revenue Service. The rate applicable to the fourth quarter (October through December) of 1999, as announced by the IRS, is 8 percent.

The following table lists the late payment interest rates for premiums and employer liability for the specified time periods:

From	Through	Interest rate (percent)
10/1/92	6/30/94	7
7/1/94	9/30/94	8
10/1/94	3/31/95	9
4/1/95	6/30/95	10
7/1/95	3/31/96	9
4/1/96	6/30/96	8
7/1/96	3/31/98	9
4/1/98	12/31/98	8
1/1/99	3/31/99	7
4/1/99	12/31/99	8

Underpayments and Overpayments of Multiemployer Withdrawal Liability

Section 4219.32(b) of the PBGC's regulation on Notice, Collection, and Redetermination of Withdrawal Liability (29 CFR part 4219) specifies the rate at which a multiemployer plan is to charge or credit interest on underpayments and overpayments of withdrawal liability under section 4219 of ERISA unless an applicable plan provision provides otherwise. For interest accruing during any calendar quarter, the specified rate is the average quoted prime rate on short-term commercial loans for the fifteenth day (or the next business day if the fifteenth day is not a business day) of the month preceding the beginning of the quarter, as reported by the Board of Governors of the Federal Reserve System in Statistical Release H.15 (''Selected Interest Rates''). The rate for the fourth quarter (October through December) of 1999 *(i.e.*, the rate reported for September 15, 1999) is 8.25 percent.

The following table lists the withdrawal liability underpayment and overpayment interest rates for the specified time periods:

From	Through	Interest rate (percent)
10/1/92	6/30/94	6.00
7/1/94	9/30/94	7.25
10/1/94	12/31/94	7.75
1/1/95	3/31/95	8.50
4/1/95	9/30/95	9.00
10/1/95	3/31/96	8.75
4/1/96	6/30/97	8.25
7/1/97	12/31/98	8.50
1/1/99	9/30/99	7.75
10/1/99	12/31/99	8.25

Multiemployer Plan Valuations Following Mass Withdrawal

The PBGC's regulation on Duties of Plan Sponsor Following Mass Withdrawal (29 CFR part 4281) prescribes the use of interest assumptions under the PBGC's regulation on Allocation of Assets in Single-employer Plans (29 CFR part 4044). The interest assumptions applicable to valuation dates in November 1999 under part 4044 are contained in an amendment to part 4044 published elsewhere in today's **Federal Register**. Tables showing the assumptions applicable to prior periods are codified in appendix B to 29 CFR part 4044.

Issued in Washington, DC, on this 8th day of October 1999.

David M. Strauss,

Executive Director, Pension Benefit Guaranty Corporation.

[FR Doc. 99–26959 Filed 10–14–99; 8:45 am]

BILLING CODE 7708–01–P

SECURITIES AND EXCHANGE COMMISSION

Submission for OMB Review; Comment Request

Upon Written Request, Copies Available From: Securities and Exchange Commission, Office of Filings and Information Services, Washington, DC 20549

Extension:

Rule 10b–17 SEC File No. 270–427 OMB Control No. 3235–0476

Notice is hereby given that pursuant to the Paperwork Reduction Act of 1995 (44 U.S.C. 3501 *et seq.)* the Securities and Exchange Commission (''Commission'') has submitted to the Office of Management and Budget a request for extension of the previously approved collection of information discussed below.

Rule 10b–17, Untimely announcements of record dates (17 CFR 240.10b–17).

Rule 10b–17 requires any issuer of a class of securities publicly traded by the use of any means or instrumentality or interstate commerce or of the mails or of any facility of any national securities exchange to give notice of the following actions relating to such class of securities: (1) a dividend; (2) a stock split; or (3) a rights or other subscription offering. Notice shall be (1) given to the National Association of Securities Dealers, Inc.; (2) in accordance with the procedures of the national securities exchange upon which the securities are registered; or (3) may be waived by the Commission.

The information required by Rule 10b–17 is necessary for the execution of the Commission's mandate under the Exchange Act to prevent fraudulent, manipulative, and deceptive acts and practices by broker-dealers. The consequence of not requiring the information collection pursuant to Rule 10b–17 is that sellers who have received distributions as recordholders may dispose of the cash or stock dividends or other rights received as recordholders without knowledge of possible claims of purchasers.

Annually, there are approximately 29,430 respondents (based on information received from the NASD that it received 15,586 responses in 1998 and the NYSE that it received 13,847 responses in 1998). It is estimated that each response takes about 10 minutes (or 0.1666 hours) to complete, thus imposing approximately 4,905 burden hours annually (29,430 × 0.1666). We believe that the average hourly cost to produce and file a response under the rule is about $50. Therefore, the annual reporting cost burden for complying with this rule is about $245,250 (4,905 × $50).

An agency may not conduct or sponsor, and a person is not required to respond to, a collection of information unless it displays a currently valid control number. Written comments regarding the above information should be directed to the following persons: (i) Desk Officer for the Securities and Exchange Commission, Office of Information and Regulatory Affairs, Office of Management and Budget, Room 10102, New Executive Office Building, Washington, D.C. 20503; and (ii) Michael E. Bartell, Associate Executive Director, Office of Information Technology, Securities and Exchange Commission, 450 Fifth Street, NW., Washington DC 20549. Comments must be submitted to OMB within 30 days of this notice.

Dated: October 7, 1999.

Margaret H. McFarland,

Deputy Secretary.

[FR Doc. 99–26889 Filed 10–14–99; 8:45 am]

BILLING CODE 8010–01–M

SECURITIES AND EXCHANGE COMMISSION

Sunshine Act Meeting

FEDERAL REGISTER CITATION OF PREVIOUS ANNOUNCEMENT: [64 FR 55323, October 12, 1999].

STATUS: Closed Meeting.

PLACE: 450 Fifth Street, NW., Washington, DC.

DATE PREVIOUSLY ANNOUNCED: October 12, 1999.

CHANGE IN THE MEETING: Cancellation.

The closed meeting scheduled for Tuesday, October 13, 1999, following the open meeting, has been cancelled.

At times, changes in Commission priorities require alterations in the scheduling of meeting items. For further information and to ascertain what, if any, matters have been added, deleted or postponed, please contract: The Office of the Secretary at (202) 942–7070.

Dated: October 12, 1999.

Jonathan G. Katz,

Secretary.

[FR Doc. 99–27075 Filed 10–13–99; 8:45 am]

BILLING CODE 8010–01–M

SECURITIES AND EXCHANGE COMMISSION

Sunshine Act Meeting

Notice is hereby given, pursuant to the provisions of the Government in the Sunshine Act, Pub. L. 94–409, that the Securities and Exchange Commission will hold the following meetings during the week of October 18, 1999.

An open meeting will be held on Tuesday, October 19, 1999, at 10:00 a.m. A closed meeting will be held on Tuesday, October 19, 1999, following the 10:00 a.m. open meeting.

Commissioners, Counsel to the Commissioners, the Secretary to the Commission, and recording secretaries will attend the closed meeting. Certain staff members who have an interest in the matters may also be present.

The General Counsel of the Commission, or his designee, has certified that, in his opinion, one or more of the exemptions set forth in 5 U.S.C. 552b(c)(4), (8), (9)(A) and (10) and 17 CFR 200.402(a)(4), (8), (9)(i) and (10), permit consideration of the scheduled matters at the closed meeting.

Commissioner Hunt, as duty officer, voted to consider the items listed for the closed meeting in a closed session.

The subject matters of the open meeting scheduled for Tuesday, October 18, 1999, at 10:00 a.m. will be:

The Commission will consider adopting amendments to the registration, proxy and tender offer rules relating to business combination transactions and security holder communications. If adopted, the amendments will permit increased communications with security holders, balance the treatment of cash and stock tender offers, and update, simplify and harmonize the rules and regulations governing business combination transactions. For further information, please contact Dennis O. Garris or James J. Moloney in the Office of Mergers and Acquisitions in the Division of Corporation Finance at (202) 942–2920.

The Commission will consider adopting amendments to the tender offer and registration rules relating to cross-border transactions. U.S. residents holding stock in foreign issuers are often excluded from tender offers and rights offers for the foreign issuers' securities because of conflicts between U.S. and foreign regulation of these offers. Many foreign companies have been unwilling to comply with U.S. securities law requirements that they view as burdensome and are hesitant to subject themselves to increased litigation risk. As a result, U.S. shareholders of foreign issuers are unable to benefit from any premium offered in a tender offer or business combination or are unable to purchase additional securities at a discount in a rights offering. These amendments are intended to facilitate the inclusion of U.S. holders of foreign securities in tender and exchange offers, business combinations and rights offerings. For further information, please contact David Sirignano at (202) 942–2870, or Dennis O. Garris or Laura B. Baldian in the Division of Corporation Finance at (202) 942–2920.

The subject matter of the closed meeting scheduled for Tuesday, October 19, 1999, following the 10:00 a.m. open meeting, will be:

Institution of injunctive actions.

Institution and settlement of administrative proceedings of an enforcement nature.

At times, changes in Commission priorities require alternations in the scheduling of meeting items. For further information and to ascertain what, if any, matters have been added, deleted or postponed, please contact: The Office of the Secretary at (202) 942–7070.

Dated: October 12, 1999.

Jonathan G. Katz,

Secretary.

[FR Doc. 99–27155 Filed 10–13–99; 3:48 pm]

BILLING CODE 8010–01–M

SECURITIES AND EXCHANGE COMMISSION

[Release No. 34–41985; File No. SR–Amex–99–36]

Self-Regulatory Organizations; Notice of Filing of Proposed Change by the American Stock Exchange LLC Relating to Solicitation of Options Transactions

October 7, 1999.

Pursuant to Section 19(b)(1) of the Securities Exchange Act of 1934 (''Act''),[1] notice is hereby given that on September 2, 1999, the American Stock Exchange LLC (''Amex'' or ''Exchange'') filed with the Securities and Exchange Commission (''SEC'' or ''Commission'') the proposed rule change as described in Items I, II, and III below, which Items have been prepared by the Amex.[2] The Commission is publishing this notice to solicit comments on the proposed rule change firm interested persons.

I. Self-Regulatory Organization's Statement of the Terms of Substance of the Proposed Rule Change

The Amex proposes to amend Amex Rule 950(d), Commentary .02 to provide that a member firm seeking to facilitate its own public customer's order or 400 contracts or more will be permitted to participate in the firm's proprietary account as the contra-side of that order to the extent of at least 25% of the order, provided that no public customer order has priority over the facilitation order. If a public customer order on the specialist's book or represented in the trading crowd has priority over the facilitation order, the member firm may participate to the extent of at least 25% of only those contracts remaining after the public customer's order has been filled. In addition, the Amex proposes to adopt Commentary .04 to Amex Rule 950(d), which will require members to share information about solicited, facilitated, and crossed orders with the trading crowd.

II. Self-Regulatory Organization's Statement of the Purpose of, and Statutory Basis for, the Proposed Rule Change

In its filing with the Commission, the Amex included statements concerning the purpose of and basis for the proposed rule change and discussed any comments it received on the proposed rule change. The text of these statements may be examined at the places specified

[1] 15 U.S.C. 78s(b)(1).

[2] The proposal replaces an earlier proposal (File No. SR–Amex–98–19), which the Amex has withdrawn. *See* Securities Exchange Act Release No. 41864 (September 10, 1999).

in Item IV below. The Amex has prepared summaries, set forth in Sections A, B, and C below, of the most significant aspects of such statements.

A. Self-Regulatory Organization's Statement of the Purpose of, and Statutory Basis for, the Proposed Rule Change

(a) Purpose

The Amex proposes to amend Exchange Rule 950 to provide 25% participation right to member firms facilitating customer transactions of 400 or more equity option contracts.[3] Amex Rule 950(d), Commentary .02 provides for the execution of facilitation orders.[4] A member that engages in facilitation cross on behalf of its public customer must comply with the procedures set forth in Commentary .02.[5] Other market participants may compete only with the member firm order by accepting the bid or offer made on behalf of the public customer. Because other market participants may not compete with the public customer side of the order, use of its facilitation rule assures that the public customer's order is executed completely.

According to the Amex, member firms believe that when a member seeks to facilitate a large public customer options order with an order for the firm's proprietary account, the firm should be able to participate to some extent with its customer's order. Therefore, the Amex proposes to amend Amex Rule 950(d), Commentary .02 to provide that a member firm whose proprietary account is facilitating its own customer's options order of 400 contracts or more may participate as contra-party to the extent of at least 25% of the trade.[6] The member firm must follow the procedures set forth in Commentary .02 for the facilitation of a public customer order to be eligible for the proposed participation guarantee.

Under the proposed rule, public customer orders on the specialist's book or represented in the crowd will have priority over the member firm's guaranteed participation; therefore, a member firm's minimum participation will be 25% of the number of contracts remaining after public customer orders with priority have been filled. For example, if there is a public customer order to buy 250 contracts on the specialist's book or represented in the trading crowd, the member firm facilitating its customer order to sell 1,000 contracts will have a guaranteed 25% participation only on the remaining 750 contracts. In addition, if the trading crowd betters the bid or offer, the member firm will be given a reasonable opportunity to determine whether the member firm wishes to participate and receive the minimum 25% of the trade at the crowd's bettered market.

The Exchange believes that providing a guaranteed 25% participation (subject to the limits described above) to member firms seeking to facilitate their own public customer orders will provide an incentive for member firms to bring large option orders to the floor of the Amex rather than to the floor of another options exchange or to the over-the-counter market. The Amex notes that the Chicago Board Options Exchange (''CBOE'') has filed a similar proposal with the Commission,[7] and that other actual and potential options market competitors also have announced plans to provide similar participation guarantees to member firms.[8] Thus, the Amex believes that the proposed rule change is necessary for it to remain competitive.

The Exchange also proposes to adopt Amex Rule 950(d), Commentary .04 to prohibit the use of non-public information received during the facilitation and solicitation processes. The Amex notes that members generally solicit participation in large size orders and/or orders with more complex terms and conditions, including orders involving both stock and options. The facilitation rule provides procedures that allow the customer's order to be completely executed and prohibits the trading floor from supplanting the customer.

Because the facilitation and solicitation rules are designed to promote the interaction of orders in an open-outcry auction, both rules require disclosure of information to the trading crowd to provide the crowd with an opportunity to participate in the transaction with the facilitating member of the solicited party. These rules impose order exposure requirements on floor brokers seeking to cross buy orders and sell orders and seek to reconcile these practices with the rules and practices of the auction market. The Amex believes that providing trading crowds with an opportunity to participate in transaction from which they had been excluded results in more competitive markets and executions for customers at the best available prices. In furtherance of the effort, the Exchange seeks to codify and expand its policy prohibiting either a member or a person associated with a member from using non-public information for the member's or associated person's benefit by trading in the underlying stock or in related instruments. Use of such non-public information by the member or associated person (regardless of whether that party ultimately completes the options transaction) is generally considered conduct inconsistent with just and equitable principles of trade.

Thus, the Amex proposes to adopt Amex Rule 950(d), Commentary .04, which states that it may be inconsistent with just and equitable principles of trade for any member or person associated with a member, who has knowledge of all material terms and condition of (1) an originating order and a solicited order, (2) an order being facilitated, or (3) orders being crossed, the execution of which are imminent, to enter, based on such knowledge, an order to buy or sell an option of the same class as any option that is the subject of the order, or any order to buy or sell the security underlying such class, or an order to buy or sell any related instrument until either (1) all the terms of the order and any changes in the terms or condition of the order of which the member or associated person has knowledge are disclosed to the trading crowd, or (2) the trade can no longer reasonably be considered imminent in view of the passage of time

[3] For a multi-part or spread order, at least one leg of the order must be for 400 contracts or more.

[4] Facilitation orders are orders in which a member or member organization executes a crossing transaction with an order for a public customer. *See also* Amex Floor Members Circular #89–614 (facilitation occurs when a member representing an order in options agrees to take the contra-side of the transaction or has another customer order which he can use to fill the terms of the order.)

[5] Commentary .02 permits a member to cross an order for a public customer of a member and a facilitation order if the member discloses all of the terms of the public customer order, requests bids and offers, identifies the order as being subject to facilitation, and bids/offers above/below the highest bid/lowest offer.

[6] Amex Rule 904G(e)(iii) provides a similar participation right to member firms executing FLEX trades. Specifically, Amex Rule 904G(e)(iii) permits a Submitting Member to execute 25% of the contra-side of the trade where the member has indicated an intention to cross or act as principal on the trade and has matched or improved the best bid or offer.

[7] *See* Securities Exchange Act Release No. 41609 (July 8, 1999), 64 FR 38494 (July 16, 1999) File No. SR–CBOE–99–11) (notice of filing of proposed rule change). Under the CBOE's proposal, a floor broker seeking to execute an equity option order for 500 contracts or more (the ''original order'') will have priority to cross a specified percentage of the original order against other customer orders from the firm that generated the original order of the firm that generated the original order.

[8] The International Securities Exchange (''ISE'') has applied for registration as a national securities exchange under Section 6 of the Act. *See* Securities Exchange Act Release No. 41439 (May 24, 1999), 64 FR 29867 (June 1, 1999). Proposed ISE Rule 716 provides a guaranteed participation for a facilitating Electronic Access Member.

since the order was received.[9] The purpose of this policy is to prevent members and associated persons from using undisclosed information about imminent solicited option transactions to trade the relevant option or any closely related instrument in advance of persons represented in the trading crowd. Without this prohibition, such trading can threaten the integrity of the auction market or disadvantage other market participants. Given the similarity between the facilitation and solicitation rules, the Amex believes that applying the same prohibitions concerning the use of non-public information to the facilitation rule is necessary and appropriate to prevent similar misuse of such information.

(b) Statutory Basis

The Amex believes that the proposed rule change is consistent with Section 6(b) of the Act, in general, and further the objectives of Section 6(b)(5) of the Act, in particular, in that it is designed to prevent fraudulent and manipulative acts and practices, to promote just and equitable principles of trade, to remove impediments to and perfect the mechanism of a free and open market and a national market system, and, in general, to protect investors and the public interest.

B. Self-Regulatory Organization's Statement on Burden on Competition

The Amex believes that the proposed rule change will impose no burden on competition.

C. Self-Regulatory Organization's Statement on Comments on the Proposed Rule Change Received from Members, Participants, or Others

No written comments were solicited or received with respect to the proposed rule change.

III. Date of Effectiveness of the Proposed Rule Change and Timing for Commission Action

Within 35 days of the date of publication of this notice in the **Federal Register** or within such longer period (i) as the Commission may designate up to 90 days of such data if it finds such longer period to be appropriate and publishes its reasons for so finding or (ii) as to which the self-regulatory organization consents, the Commission will by order approve such proposed rule change, or institute proceedings to determine whether the proposed rule change should be disapproved.

IV. Solicitation of Comments

Interested persons are invited to submit written data, views, and arguments concerning the foregoing, including whether the proposed rule change is consistent with the Act. Persons making written submissions should file six copies thereof with the Secretary, Securities and Exchange Commission, 450 Fifth Street, NW, Washington, DC 20549. Copies of the submission, all subsequent amendments, all written statements with respect to the proposed rule change that are filed with the Commission, and all written communications relating to the proposed rule change between the Commission and any person, other than those that may be withheld from the public in accordance with the provisions of 5 U.S.C. 552, will be available for inspection and copying in the Commission's Public Reference Room. Copies of such filing will also be available for inspection and copying at the principal office of the Amex. All submissions should refer to File No. SR–Amex–99–36 and should be submitted by November 5, 1999.

For the Commission, by the Division of Market Regulation, pursuant to delegated authority.[10]

Margaret H. McFarland,

Deputy Secretary.

[FR Doc. 99–26890 Filed 10–14–99; 8:45 am]

BILLING CODE 8010–01–M

SECURITIES AND EXCHANGE COMMISSION

[Release No. 34–41990; File No. SR–NASD–99–44]

Self-Regulatory Organizations; Notice of Filing and Immediate Effectiveness of Proposed Rule Change by the National Association of Securities Dealers, Inc. Regarding Marketable Limit Orders

October 7, 1999.

Pursuant to Section 19(b)(1) of the Securities Exchange Act of 1934 (''Act'')[1] and Rule 19b–4 thereunder,[2] notice is hereby given that on September 10, 1999, the National Association of Securities Dealers, Inc. (''NASDA'' or ''Association''), through its wholly owned subsidiary Nasdaq Stock Market, Inc. (''Nasdaq '') filed with the Securities and Exchange Commission (''SEC'' or ''Commission'') a proposed rule change as described in Items I, II, and III below, which Items have been prepared by Nasdaq. Nasdaq has designated this proposal as one constituting a stated policy, practice, or interpretation with respect to the meaning, administration, or enforcement of an existing rule under Section 19(b)(3)(A) of the Act, which renders the rule effective upon the Commission's receipt of this filing. On September 28, 1999, Nasdaq submitted Amendment No. 1 to the proposed rule change.[3] The Commission is publishing this notice to solicit comments on the proposed rule change from interested persons.

I. Self-Regulatory Organization's Statement of the Terms of Substance of the Proposed Rule Change

Nasdaq is proposing to amend Interpretive Material 2110–2 (''Manning Rule'') of the NASD to provide an exclusion from the Manning Rule for limit orders that are marketable upon time of receipt. Below is the text of the proposed rule change. Proposed new language is in *italics*; proposed deletions are in brackets.

IM–2110–2. Trading Ahead of Customer Limit Order

(a) General Application

There are no changes to the existing language.

(b) Exclusion for Limit Orders that are Marketable At Time of Receipt

The Association has previously recognized the functional equivalency of marketable limit orders and market orders. Accordingly, it has adopted the following interpretation. IM–2110–2 shall not apply to a customer limit order if the limit order is marketable at the time it is received by a market maker. These orders shall be treated as market orders for purposes of determining execution priority, however, these orders must continue to be executed at their limit price or better.

The exclusion for marketable customer limit orders from the general application of IM–2110–2 is limited solely to customer limit orders that are marketable when received by a market maker. If a customer limit order is not marketable when received by a market maker, the limit order must be accorded the full protections of IM–2110–2. In

---

[9] For purposes of Commentary .04, an order to buy or sell a ''related instrument,'' means, in reference to an index option, an order to buy or sell securities comprising 10% or more of the component securities in the index or an order to buy or sell a futures contract on an economically equivalent index.

[10] 17 CFR 200.30–3(a)(12).

[1] 15 U.S.C. 78s(b)(1).

[2] 17 CFR 240.19b–4.

[3] In Amendment No. 1, Nasdaq made a technical change to the proposed rule language. *See* letter to Richard Strasser, Assistant Director, Commission, from Robert E. Aber, Senior Vice President and General Counsel, Nasdaq, dated September 24, 1999.

addition, if the limit order was marketable when received and then becomes non-marketable, once the limit order becomes non-marketable it must be accorded the full protections of IM–2110–2.

The following scenario illustrates the application of the exclusion The market in XYZ stock is 25 bid—25¹⁄₁₆ ask, the volume of trading in XYZ stock is extremely active, and Market Maker A (''MMA'') has a queue of market orders to buy and sell. Assume the following order receipt scenario. Each sell market order in the queue is for 1,000 shares and there are not special conditions attached to the orders. MMA then receives a customer limit to sell 1,000 shares at 25. The customer limit order is marketable at the time it is received by MMA. MMA hits another market maker's bid at 25 for 1,000 shares. Normally, IM–2110–2 would require that the customer limit order be executed before the market orders in the queue. However, because the marketable limit order and the market orders should be treated as functionally equivalent in determining execution priority, the marketable customer limit order shall not be given execution priority over the market orders that were already in the queue. When the limit order is executed, however, it must be executed at the limit price or better.

In addition, if in the scenario just described the limit order does not get executed and the inside market in XYZ becomes 24⁷⁄₁₆ bid, the market maker would have to protect the limit order as required by IM–2110–2 if the market maker trades at the limit order price or better.

II. Self-Regulatory Organization's Statement of the Purpose of, and Statutory Basis for, the Proposed Rule Change

In its filing with the Commission, Nasdaq included statements concerning the purpose of and basis for the proposed rule change and discussed any comments it received on the proposed rule change. The text of these statements may be examined at the places specified in Item IV below. Nasdaq has prepared summaries, set forth in sections A, B, and C below, of the most significant aspects of such statements.

A. Self-Regulatory Organization's Statement of the Purpose of, and Statutory Basis for, the Proposed Rule Change

1. Purpose

Nasdaq has received several inquiries from members about whether the Manning Rule, which governs trading ahead of customer limit orders, should be applicable in the following situation. A market maker receives a market order to buy or sell a security and thereafter receives a *marektable*[4] customer limit order on the same side of the market. The question is whether the *marketable* customer limit order must be given preference over the first in time market order because of the Manning Rule. Nasdaq believes the answer properly should be no.

An example of a particular order receipt and execution scenario is helpful in understanding the issue, which arises when there are multiple orders in a market maker's order queue.

Assume that the market in XYZ stock is 25 bid—25¹⁄₁₆ ask, the volume of trading in XYZ stock is extremely active, and Market Maker A (''MMA'') has a queue of market orders to buy and sell. Assume the following order receipt scenario. Each sell order in the queue is for 1,000 shares and there are no special conditions attached to the order. MMA then receives a customer limit order to sell 1,000 shares at 25. The customer limit order is marketable at the time it is received by MMA. MMA hits several other market makers' bids at 25 and is filled for a total of 5,000 shares (*i.e.*, MMA has sold 5,000 shares at 25). MMA then executives the first five market orders in its queue based upon time priority (*i.e.*, MMA buys 1,000 shares from each of the first five market orders it received), but does not execute the customer limit order. In hitting the other market makers' bids at 25, MMA has traded at a price that is equal to the limit order price.

Manning Rule

The Manning Rule requires members acting as market makers to handle their customer limit orders with all due care so that market makers do not ''trade ahead'' of those limit orders. Thus, members acting as market makers that handle customer limit orders, whether received from their own customers or from another member, are prohibited from trading at prices equal or superior to that of the limit order without executing the limit order.

If the Manning Rule is applicable in the scenario described, MMA would be in violation of Manning because it sold shares at 25, which is the limit order price, and did not execute the limit order. MMA, however, did fill the five market orders to sell (*i.e.*, MMA bought shares). To avoid a Manning Rule violation, MMA would have to execute the marketable customer limit order before the market orders, even though the market orders have time priority. If this is done, MMA would not violate the Manning Rule because, even though it sold at the limit order price to another market maker, MMA would have filled the limit order at the limit order price. Nasdaq believes, however, that giving the marketable customer limit order execution priority in order to avoid a Manning Rule violation creates an inequitable result. In the scenario described, the marketable customer limit order would jump ahead of the five market orders that were in the execution queue before the limit order was placed, and as discussed below, Nasdaq believes marketable limit orders and market orders should be treated the same in such a situation.

Proposed Interpretation

Nasdaq does not believe that market orders in the form of *marketable* limit order should be afforded preferential status by virtue of the Manning Rule. This is consistent with positions taken in the past by the Commission and Nasdaq. The Commission recognized the proposition that marketable limit orders and market orders are equivalent when it approved Nasdaq's proposed changes to the Small Order Execution System (''SOES'').[5] These changes were necessary to implement the SEC's Order Handling Rules. Prior to the changes, SOES executed marketable limit orders ahead of market orders in the SOES queue. To eliminate the disparate treatment of substantially identical orders, Nasdaq proposed to redesign SOES so that market orders and marketable limit orders would be executed on a time priority basis. In the order approving the changes, the Commission stated that the amendment would eliminate an unwarranted advantage that customers that place marketable limit orders have over customers that place market orders.[6] The Commission also stated that the changes reflect the functional equivalency of these two types of orders.[7]

In addition, Nasdaq also articulated this position in NASD Notice to

[4] A marketable sell limit order is a limit order to sell a security at a price that is equal to or less than the inside bid, whereas, a marketable buy limit order is a limit order to buy a security at a price that is equal to or greater than the inside ask. For example, a limit order to sell at 25 when the inside bid is 25 or a limit order to buy at 30 when the inside ask is at 30.

[5] Securities Exchange Act Release No. 38156 (January 10, 1997), 62 FR 2415 (January 16, 1997) (Order approving SR–NASD–96–43).

[6] *Id.*

[7] *Id.*

Members 97–57.[8] In that Notice of Members, Nasdaq presented several examples of customer order scenarios and addressed members' responsibilities under the Manning Rule, best execution principles, and the SEC Order Handling Rules[9] in executing customers' orders. In analyzing a scenario in which one customer limit order could cross another customer limit order, Nasdaq stated *marketable* limit orders are the equivalent of market orders and should be treated as such under best execution principles, which, in the example described above, dictate that the order that is received first should be executed first.

Accordingly, Nasdaq believes the Manning Rule, which is designed to protect consumer limit orders, should not be applicable to *marketable* customer limit orders because such orders are functionally equivalent to market orders and should be treated as such. To find otherwise would enable orders, which in reality are market orders, to be nominally designated as limit orders and essentially jump the queue of market orders for execution. In fact, in applying the exclusion, Nasdaq would consider it a violation of a market maker's best execution obligation if the market maker executes the marketable customer limit order before market orders that are in the queue.

The proposed interpretation is limited to customer limit orders that are *already marketable when received* by market makers. If the limit order becomes marketable while in possession of the market maker, the limit order would be protected under the Manning Rule.

Finally, nothing in the interpretation alters a market maker's obligation to execute the customer limit order at the limit price or better or to display the order as required by Rule 11Ac1–4 under the Act.[10]

2. Statutory Basis

Nasdaq believes that the proposed rule change is consistent with the provisions of Section 15A(b)(6)[11] of the Act in that the proposed rule change is designed to prevent fraudulent and manipulative acts and practices, to promote just and equitable principles of trade, and to protect investors and the public interest by preventing orders, which in reality are market orders, from receiving execution priority by being nominally designated as limit orders. The proposal would eliminate an unwarranted advantage that customers that place marketable limit orders have over those customers that place market orders.

B. Self-Regulatory Organization's Statement on Burden on Competition

Nasdaq does not believe that the proposed rule change will result in any burden on competition that is not necessary or appropriate in furtherance of the purposes of the Act, as amended.

C. Self-Regulatory Organization's Statement on Comments on the Proposed Rule Change Received From Members, Participants, or Others

No written comments were solicited or received with respect to the proposed rule change.

II. Date of Effectiveness of the Proposed Rule Change and Timing for Commission Action

The foregoing rule change has become effective upon filing pursuant to Section 19(b)(3)(A)[12] of the Act and subparagraph (f) of Rule 19b–4[13] thereunder in that it constitutes a stated policy, practice, or interpretation with respect to the meaning, administration, or enforcement of an existing rule. Specifically, the proposal is an interpretation that harmonizes IM–2110–2 with the Commission's and the Association's published positions regarding the proper handling of marketable customer limit orders.

At any time within 60 days of the filing of a rule change pursuant to Section 19(b)(3)(A) of the Act, the Commission may summarily abrogate the rule change if it appears to the Commission that such action is necessary or appropriate in the public interest, for the protection of investors, or otherwise in furtherance of the purposes of the Act.

III. Solicitation of Comments

Interested persons are invited to submit written data, views, and arguments concerning the foregoing, including whether the proposed rule change is consistent with the Act.[14] Persons making written submissions should file six copies thereof with the Secretary, Securities and Exchange Commission, 450 Fifth Street, NW, Washington, DC 20549–0609. Copies of the submission, all subsequent amendments, all written statements with respect to the proposed rule change that are filed with the Commission, and all written communications relating to the proposed rule change between the Commission and any person, other than those that may be withheld from the public in accordance with the provisions of 5 U.S.C. 552, will be available for inspection and copying in the Commission's Public Reference Room. Copies of such filing will also be available for inspection and copying at the principal office of the NASD. All submissions should refer to File No. SR–NASD–99–44 and should be submitted by November 5, 1999.

For the Commission, by the Division of Market Regulation, pursuant to delegated authority.[15]

Margaret H. McFarland,

Deputy Secretary.

[FR Doc. 99–26891 Filed 10–14–99; 8:45 am]

BILLING CODE 8010–01–M

[8] *See* Answer to Question Number 6 in NASD Notice to Members 97–57 (Interpretations of SEC Order Handling Rules, NASD Limit Order Protection Rules, And Members Best Execution Responsibilities).

[9] *See* Securities Exchange Act Rule 11Ac1–1, 17 CFR 240.11Ac1+1 and Securities Exchange Act Rule 11Ac1–4, 17 CFR 250.11Ac1–4.

[10] Subject to certain exceptions, Rule 11Ac1–4(b)(2) requires a market maker to display the full price and size of customer limit orders that: (i) would improve the market maker's bid or offer; or (ii) are equal to the market maker's bid or offer, the national best bid or offer and represent more than a de minimis change in the market maker's quoted size. 17 CFR 240.11Ac1–4(b)(2).

[11] 15 U.S.C. 78o–3(b)(6).

[12] 15 U.S.C. 78s(b)(3)(A).

[13] 17 CFR 240.19b–4(f).

[14] In reviewing this proposal, the Commission has considered its impact on efficiency, competition, and capital formation. 15 U.S.C. 78c(f).

[15] 17 CFR 200.30–3(a)(12).

SECURITIES AND EXCHANGE COMMISSION

[Release No. 34–41988; File No. SR–NASD–99–58]

Self-Regulatory Organizations; Notice of Filing and Order Granting Accelerated Approval of Proposed Rule Change by the National Association of Securities Dealers, Inc., To Extend the Nasdaq International Service Pilot Program

October 7, 1999.

Pursuant to Section 19(b)(1) of the Securities Exchange Act of 1934 (''Act''),[1] and Rule 19b–4 thereunder,[2] notice is hereby given that on October 6, 1999, the National Association of Securities Dealers, Inc. (''NASD'' or ''Association'') filed with the Securities and Exchange Commission (''SEC'' or ''Commission'') the proposed rule change as described in Items I and II below, which Items have been prepared by the Nasdaq Stock Market, Inc. (''Nasdaq''). The Commission is publishing this notice to solicit comments on the proposed rule change from interested persons and to grant

[1] 15 U.S.C. 78s(b)(1).

[2] 17 CFR 240.19b–4.

accelerated approval to the proposed rule change.

I. Self-Regulatory Organization's Statement of the Terms of Substance of the Proposed Rule Change

The NASD proposes to extend for one year: (1) The term of the Nasdaq International Service (''Service'') pilot program and (2) the effectiveness of certain rules (''International Rules'') that are unique to the Service. The proposed rule change does not entail any modification of the International rules. The present authorization for the Service and the International Rules expires on October 9, 1999. With this filing, the pilot program for the Service and the International Rules would be extended until October 9, 2000.

II. Self-Regulatory Organization's Statement of the Purpose of, and Statutory Basis for, the Proposed Rule Change

In its filing with the Commission, the NASD included statements concerning the purpose of and basis for the proposed rule change and discussed any comments it received on the proposed rule change. The text of these statements may be examined at the places specified in Item III below. Nasdaq has prepared summaries, set forth in Sections A, B, and C below, of the most significant aspects of such statements.

A. Self-Regulatory Organization's Statement of the Purpose of, and Statutory Basis for, the Proposed Rule Change

1. Purpose

The NASD proposes to extend for an additional year, until October 9, 2000, the pilot operation of the Service and the effectiveness of the International Rules governing broker-dealers' access to and use of the Service. The existing pilot operation of the Service and the International Rules was originally authorized by the Commission in October 1991 [3] and the Service was launched on January 20, 1992. The pilot has since been extended and is currently set to expire on October 9, 1999.[4]

The Service supports an early trading session running from 3:30 a.m. to 9:00 a.m. Eastern Time on Each U.S. business day (''European Session'') that overlaps the business hours of the London financial markets. Participation in the Service is voluntary and is open to any authorized NASD member firm or its approved broker-dealer affiliate in the U.K. A member participates as a Service market maker either by staffing its trading facilities in the U.S. or the facilities of its approved affiliate during the European Session. The Service also has a variable opening feature that permits Service market makers to elect to participate starting from 3:30 a.m., 5:30 a.m. or 7:30 a.m. Eastern Time. The election is required to be made on a security-by-security basis at the time a firm registers with the NASD as a Service market maker.[5] At present, there are no Service market makers participating in the Service.

As noted above, the NASD is seeking to extend the pilot term for one year. During this period, the NASD will continue to reevaluate the Service's operation and consider possible enhancements to the Service to broaden market-maker participation. The NASD continues to view the Service as a significant experiment in expanding potential opportunities for international trading via systems operated by Nasdaq. Accordingly, the NASD believes that this pilot operation warrants an extension to permit possible enhancement that will increase the Service's utility and attractiveness to the investment community.[6] The NASD maintains its belief that it is extremely important to preserve this facility and the opportunities it provides, especially in light of the increasingly global nature of the securities markets and the trend of cross-border transactions generally.

In addition, the Service still serves an invaluable role as a critical early warning mechanism in the context of significant changes involving Nasdaq software and hardware systems. Specifically, because the Service operates in the early morning hours prior to the opening of trading in the domestic session of Nasdaq, the Service has provided for the early detection of systems or communications problems when Nasdaq implements these systems changes.

2. Statutory Basis

The NASD believes the proposed rule change is consistent with Sections 11A(a)(1)(B) [7] and (C) [8] and 15A(b)(6) [9] of the Act. Subsections (B) and (C) of Section 11A(a)(1) [10] set forth the Congressional goals of achieving more efficient and effective market operations, broader availability of information with respect to quotations for securities, and the execution of investor orders in the best market through the use of advanced data processing and communications techniques. Section 15A(b)(6) [11] requires, among other things, that the NASD rules be designed to prevent fraudulent and manipulative acts and practices, to promote just and equitable principles of trade, and to foster cooperation and coordination with persons engaged in regulating, clearing, settling, processing information with respect to, and facilitating transactions in securities. The NASD believes that the proposed extension of the Service and the International Rules is fully consistent with these statutory provisions.

B. Self-Regulatory Organization's Statement on Burden on Competition

The NASD believes that the proposed rule change will not result in any burden on competition that is not necessary or appropriate in furtherance of the purposes of the Act.

C. Self-Regulatory Organization's Statement on Comments on the Proposed Rule Change Received From Members, Participants or Others

Written comments were neither solicited nor received.

III. Solicitation of Comments

Interested persons are invited to submit written data, views, and arguments concerning the foregoing, including whether the proposed rule change is consistent with the Act. Persons making written submissions should file six copies thereof with the Secretary, Securities and Exchange Commission, 450 Fifth Street, NW, Washington, DC 20549–0609. Copies of the submission, all subsequent amendments, all written statements

[3] *See* Securities Exchange Act Release No. 29812 (October 11, 1991), 56 FR 52082 (October 17, 1991).

[4] *See* Securities Exchange Act Release No. 33037 (October 8, 1993), 58 FR 53752 (October 18, 1993) (extending the pilot for two years through October 11, 1995); Securities Exchange Act Release No. 36359 (October 11, 1995), 60 FR 53820 (October 17, 1995), (extending the pilot for two years through October 11, 1997); Securities Exchange Act Release No. 39216 (October 7, 1997), 62 FR 53673 (October 15, 1997) (extending the pilot for one year through October 9, 1998); Securities Exchange Act Release No. 40528 (October 7, 1998), 63 FR 55165 (October 14, 1999) (extending the pilot for one year through October 9, 1999).

[5] Regardless of the opening time chosen by the Service market maker, the Service market maker is required to fulfill all the obligations of a Service market maker from that time (*i.e.*, either 3:30 a.m., 5:30 a.m. or 7:30 a.m.) until the European Session closes at 9:00 a.m. Eastern Time. *See* Securities Exchange Act Release No. 32471 (June 16, 1993), 58 FR 33965 (June 22, 1993) (approval of File No. SR–NASD–92–54).

[6] Assuming that the pilot term is extended, the NASD will continue to supply the Commission with the statistical reports prescribed in the initial approval order for the Service order at six month intervals.

[7] 15 U.S.C. 78k–1(a)(1)(B).

[8] 15 U.S.C. 78k–1(a)(1)(C).

[9] 15 U.S.C. 78o–3(b)(6).

[10] 15 U.S.C. 78k–1(a)(1).

[11] 15 U.S.C. 780–3(b)(6).

with respect to the proposed rule change that are filed with the Commission, and all written communications relating to the proposed rule change between the Commission and any person, other than those that may be withheld from the public in accordance with the provisions of 5 U.S.C. 552, will be available for inspection and copying at the Commission's Public Reference Room. Copies of such filing will also be available for inspection and copying at the principal office of the Exchange. All submissions should refer to File No. SR–NASD–99–58 and should be submitted by November 5, 1999.

IV. Commission's Findings and Order Granting Accelerated Approval of Proposed Rule Change

The Commission finds that the proposed rule change is consistent with Sections 11A(a)(1)(B) and (C) and 15A(b)(6) of the Act.[12] The Commission believes that, in connection with the globalization of securities markets, the Service provides an opportunity to advance the statutory goals of: (1) Achieving more efficient and effective market operations; (2) broader availability of information with respect to quotations for securities; (3) the execution of investor orders in the best market through the use of advanced data processing and communications techniques; and (4) fostering cooperation and coordination with persons engaged in regulating, clearing, settling, processing information with respect to, and facilitating transactions in securities.

The Commission continues to view the Service as a significant experiment in expanding potential opportunities for international trading via a system operated by Nasdaq. The Service is intended to promote additional commitments of member firms' capital to market making and to attract commitments from firms based in Europe that currently do not function as Nasdaq market makers. Although there are no Service market makers participating in the Service, the NASD plans to reevaluate the Service's operation and consider possible enhancements to the Service to broaden market maker participation. Additionally, the Service provides an early warning system when Nasdaq implements significant changes involving its hardware and software systems. Because the Service operates before the opening of the domestic session of Nasdaq, the Service allows for the early detection of systems or communication problems. Accordingly, the Commission believes that this pilot operation warrants an extension to permit possible enhancements that will increase the Service's utility and attractiveness to the investment community. Any changes to the operation of the Service will be filed pursuant to Section 19(b)(2) of the Act.[13]

Pursuant to Section 19(b)(2) of the Act,[14] the Commission finds good cause for approving the proposed rule change prior to the 30th day after the date of publication of notice of filing thereof. The Commission believes that it is appropriate to approve on an accelerate basis the one year extension of the Service, until October 9, 2000, to ensure the continuous operation of the Service, which is set to expire on October 9, 1999.

It is therefore ordered, pursuant to Section 19(b)(2) of the Act,[15] that the proposed rule change (SR–NASD–99–58) is hereby approved on an accelerated basis.

For the Commission, by the Division of Market Regulation, pursuant to delegated authority.[16]

Margaret H. McFarland,

Deputy Secretary.

[FR Doc. 99–26892 Filed 10–14–99; 8:45 am]

BILLING CODE 8010–01–M

[12] In reviewing this proposal, the Commission has considered its potential impact on efficiency, competition and capital formation. 15 U.S.C. 78c(f).

[13] 15 U.S.C. 78s(b)(2).

[14] *Id.*

[15] *Id.*

[16] 17 CFR 200.30–3(a)(12).

SECURITIES AND EXCHANGE COMMISSION

[Release No. 34–41993; File No. SR–NASD–99–47]

Self-Regulatory Organizations; Notice of Filing and Immediate Effectiveness of Proposed Rule Change by the National Association of Securities Dealers, Inc. Relating to SelectNet Fees

October 8, 1999.

Pursuant Section 19(b)(1) of the Securities Exchange Act of 1934 (''Act''),[1] and Rule 19b–4 thereunder,[2] notice is hereby given that on September 20, 1999, the National Association of Securities Dealers, Inc. (''NASD''), through its wholly owned subsidiary, the Nasdaq Stock Market, Inc. (''Nasdaq'') filed with the Securities and Exchange Commission (''Commission'') the proposed rule change as described in Items I and II below, which Items have been prepared by Nasdaq. On September 29, 1999, Nasdaq filed with the Commission Amendment No. 1 to the proposed rule change.[3] Nasdaq has designated this proposed rule change as establishing or changing a due, fee or other charge under Section 19(b)(3)(A) of the Act,[4] which renders the proposed rule change effective upon receipt of the filing by the Commission.[5] The Commission is publishing this notice to solicit comments on the proposed rule change, as amended, from interested persons.

[1] 15 U.S.C. 78s(b)(1).

[2] 17 CFR 240.19b–4.

I. Self-Regulatory Organization's Statement of the Terms of Substance of Proposed Rule Change

Nasdaq is proposing to make changes to NASD Rule 7010, which sets forth the SelectNet fee schedule. Proposed new language is italicized; proposed deletions are in brackets.

* * * * *

7000. CHARGES FOR SERVICES AND EQUIPMENT

7010. System Services

(a)–(h) No Change

(i) SelectNet Service

[Effective February 1, 1998, t] *T*he following charges shall apply to the use of SelectNet:

Transaction Charge—$2.50/Side

Directed Order Charge—$1.00 (per execution, entering party only)

Cancellation Fee—$.25/per order

For a pilot commencing October 1, 1999, and lasting until March 31, 2000 an NASD member who enters a directed SelectNet order that is subsequently executed in whole or in part will have its monthly Directed Order Charges assessed as follows:

$1.00 per order for the first 50,000 directed orders executed that month

$0.70 per order for the next 50,000 directed orders executed that same month

$0.20 per order for all remaining directed orders executed that same month

Executions resulting from broadcast messages will continue to be assessed at a $2.50 per side rate.

[3] Amendment No. 1 makes several technical, non-substantive changes to Nasdaq's proposal. *See* letter from Thomas Moran, Assistant General Counsel, Nasdaq, to Mignon McLemore, Attorney, Division of Market Regulation, Commission, dated September 28, 1999 (''Amendment No. 1'').

[4] 15 U.S.C. 78s(b)(3)(A).

[5] The proposed rule change is deemed filed as of the date Amendment No. 1 was received by the Commission.

(j)–(n) No Change

* * * * *

II. Self-Regulatory Organization's Statement of the Purpose of, and Statutory Basis for, the Proposed Rule Change

In its filing with the Commission, Nasdaq included statements concerning the purpose of and basis for the proposed rule change and discussed any comments it received on the proposed rule change. The text of these statements may be examined at the places specified in Item IV below. Nasdaq has prepared summaries, set forth in Sections A, B, and C below, of the most significant aspects of such statements.

A. Self-Regulatory Organization's Statement of the Purpose of, and Statutory Basis for, the Proposed Rule Change

1. Purpose

In a continuing effort to provide the most cost-effective trading environment of NASD members, Nasdaq is proposing a pilot program to reduce execution costs for any NASD member who engages in significant trading activity using Nasdaq's SelectNet system. Under the pilot, NASD members who send directed orders through SelectNet that are subsequently executed in whole or in part will be assessed monthly SelectNet directed orders fees as follows: Executions 0–50,000 that month will be assessed at a $1.00 per execution rate; Executions 50,001–100,000 that same month will be assessed at a $0.70 per execution rate; and Executions 100,001 or higher that same month will be assessed at a $0.20 per execution rate. Executions resulting from broadcast messages will continue to be assessed at a $2.50 per side rate. The pilot, like previous Nasdaq SelectNet fee reductions,[6] responds to dramatic increases in SelectNet execution rates and seeks to synchronize Nasdaq's fee structure with current market activity to achieve material reductions in market participants costs. This pilot program shall run from October 1, 1999, through March 31, 1999, unless further extended or modified by Nasdaq.

2. Statutory Basis

Nasdaq believes the proposed rule change is consistent with Section 15A(b)(5)[7] of the Act because it is designed to provide for the equitable allocation of reasonable dues, fees, and other charges among its members and issuers and other persons.

B. Self-Regulatory Organization's Statement on Burden on Competition

Nasdaq does not believe that the proposed rule change will impose any burden on competition that is not necessary or appropriate in furtherance of the purposes of the Act.

C. Self-Regulatory Organization's Statement on Comments on the Proposed Rule Change Received From Members, Participants, or Others

Written comments on the proposed rule change were neither solicited nor received.

III. Date of Effectiveness of the Proposed Rule Change and Timing for Commission Action

The foregoing rule change establishes or changes a due, fee, or other charge imposed by Nasdaq and, therefore, has become effective pursuant to Section 19(b)(3)(A)(ii)[8] of the Act and subparagraph (f)(2) of Rule 19b–4 thereunder.[9] At any time within 60 days of the filing of the proposed rule change,[10] the Commission may summarily abrogate such rule change if it appears to the Commission that such action is necessary or appropriate in the public interest, for the protection of investors, or otherwise in furtherance of the purposes of the Act.[11]

IV. Solicitation of Comments

Interested persons are invited to submit written data, views, and arguments concerning the foregoing, including whether the proposed rule change is consistent with the Act. Persons making written submissions should file six copies thereof with the Secretary, Securities and Exchange Commission, 450 Fifth Street, N.W., Washington, D.C. 20549–0609. Copies of the submission, all subsequent amendments, all written statements with respect to the proposed rule change that are filed with the Commission, and all written communications relating to the proposed rule change between the Commission and any person, other than those that may be withheld from the public in accordance with the provisions of 5 U.S.C. 552, will be available for inspection and copying at the Commission's Public Reference Room. Copies of such filing also will be available for inspection and copying at the principal office of the NASD.

All submissions should refer to File No. SR–NASD–99–47 and should be submitted by November 5, 1999.

For the Commission, by the Division of Market Regulation, pursuant to delegated authority.[12]

Margaret H. McFarland,

Deputy Secretary.

[FR Doc. 99–26894 Filed 10–14–99; 8:45 am]

BILLING CODE 8010–01–M

[6] *See* Exchange Act Release No. 39248 (October 16, 1997); 62 FR 55296 (October 23, 1997).

[7] 15 U.S.C. 78*o*(b)(5).

[8] 15 U.S.C. 78s(b)(3)(A)(ii).

[9] 17 CFR 240.19b–4(f)(2).

[10] *See supra,* note 4.

[11] In reviewing this proposal, the Commission has considered the proposal's impact on efficiency, competition, and capital formation. 15 U.S.C. 78c(f).

[12] 17 CFR 200.30–3(a)(12).

SECURITIES AND EXCHANGE COMMISSION

[Release No. 34–41984; File No. SR–NYSE–99–37]

Self-Regulatory Organization; Notice of Filing and Order Granting Accelerated Approval of Proposed Rule Change by the New York Stock Exchange, Inc. to Revise the Uniform Application for Securities Industry Registration or Transfer (Form U–4) and Uniform Termination Notice for Securities Industry Registration (Form U–5)

Pursuant to Section 19(b)(1) of the Securities Exchange Act of 1934 (''Act'')[1] and Rule 19b–4 thereunder,[2] notice is hereby given that on August 31, 1999, the New York Stock Exchange, Inc. (''NYSE'' or ''Exchange'') filed with the Securities and Exchange Commission (''SEC'' or ''Commission'') the proposed rule change as described in Items I and II below, which Items have been prepared by the Exchange. The Commission is publishing this notice to solicit comments on the proposed rule change from interested persons.[3] For the reasons discussed below, the Commission is granting accelerated approval of the proposed rule change.

I. Self-Regulatory Organization's Statement of the Terms of Substance of the Proposed Rule Change

The NYSE proposes to adopt the revised Form U–4 (''Uniform Application for Securities Industry Registration or Transfer'') and the revised Form U–5 (''Uniform Termination Notice for Securities

[1] 15 U.S.C. 78s(b)(1).

[2] 17 CFR 240.19b–4.

[3] A non-substantive amendment was made to the proposal. In this amendment, the NYSE removed language describing certain aspects of the National Association of Securities Dealers, Inc.'s (''NASD'') Web CRD policy because the language was inaccurate. Telephone conversation between Mary Anne Furlong, Director, Rule and Interpretative Standards, NYSE, and Joseph P. Corcoran, Attorney, Division of Market Regulation, Commission, on September 9, 1999.

Industry Registration'').[4] The Forms, submitted as Exhibit A with this proposal, may be examined in the Commission's Public Reference Room and at the Exchange.

II. Self-Regulatory Organization's Statement of the Purpose of, and Statutory Basis for, the Proposed Rule Change

In its filing with the Commission, the NYSE included statements concerning the purpose of, and basis for, the proposed rule change and discussed any comments it received on the proposed rule change. The text of these statements may be examined at the places specified in Item III below. The NYSE has prepared summaries, set forth in Sections A, B, and C below, of the most significant aspects of such statements.

A. Self-Regulatory Organization's Statement of the Purpose of, and Statutory Basis for, the Proposed Rule Change

1. Purpose

The purpose of this filing is to request approval of the revised Forms U–4 and U–5 for use at the NYSE. These forms are used by the Exchange as part of its registration and oversight of persons associated with members and member organizations. In addition, information from these forms appears on the Central Registration Depository (''CRD'') system, in which the Exchange participates. The CRD is an industry-wide automated system that allows for the efficient review and tracking of registered persons in the securities industry, as well as changes in their employment histories.

The revised forms, along with the NASD's plan of implementation of the World Wide Web-based Central Registration Depository (''Web CRD''), were approved by the Commission on June 25, 1999.[5] The revision of Forms U–4 and U–5 was part of the NASD's effort to modernize the CRD system and to streamline the registration and termination process of individuals in the securities industry. The Forms U–4 and U–5 were amended so that they can be submitted electronically through the World Wide Web. In addition, certain disclosure questions on the forms were amended to capture more disciplinary information about potential and current registered representatives. In most cases, individuals seeking registration will be required to fill out and submit an electronic Form U–4. Further, when an associated person terminates his association with a broker-dealer, the broker-dealer will be required to fill out and submit an electronic Form U–5.

Currently, Forms U–4 and U–5 for persons employed by Exchange members and member organizations that are not also members of the NASD (''non-NASD members'') are submitted on paper directly to the Exchange. In the future, however, it is anticipated that non-NASD members will be able to file the forms electronically through Web CRD.

To allow Web CRD to efficiently process the revised forms, NASD made certain formatting and technical changes to the original electronic forms that were approved by the Commission in 1996, but not made effective because the NASD decided to change the technology they were going to use to modernize the CRD system. In addition to reformatting the Disclosure Reporting Pages, the substantive amendments to the form involve changes, which were described in SR–NASD–98–96, to certain disclosure questions. In particular, the Form U–4 question eliciting information on settled customer complaints was expanded to include oral complaints involving sales practice allegations that are settled for $10,000 or more.[6] Additionally, two Form U–5 questions were expanded to elicit information on criminal or regulatory actions initiated on the basis of events that occurred while an individual was employed by a firm, even if the actions were initiated after the individual had been terminated.[7]

The Exchange believes that the revised Forms U–4 and U–5 will assist the Exchange in its registration and oversight functions by providing more detailed reporting concerning persons associated with members and member organizations. Moreover, in the future, it is anticipated that non-NASD members of the NYSE will be able to file the forms electronically through Web CRD.

2. Statutory Basis

The Exchange believes that the use of the revised Forms U–4 and U–5 is consistent with Section 6(b)(5)[8] of the Act because the use of standard registration forms fosters cooperation and coordination with persons engaged in regulating transactions in securities. Additionally, the information reported on the forms assists the Exchange in its responsibilities under Section 6(c)[9] of the Act, which requires that an Exchange deny membership to persons subject to a statutory disqualification or persons who cannot meet such standards of training, experience and competence as are prescribed by the rules of the Exchange or persons who have engaged in acts or practices inconsistent with just and equitable principles of trade.

B. Self-Regulatory Organization's Statement on Burden on Competition

The Exchange believes that the proposal does not impose any burden on competition that is not necessary or appropriate in furtherance of the purposes of the Act.

C. Self-Regulatory Organization's Statement on Comments on the Proposed Rule Change Received from Members, Participants, or Others

Written comments were neither solicited nor received.

III. Solicitation of Comments

Interested persons are invited to submit written data, views, and arguments concerning the foregoing, including whether the proposed rule is consistent with the Act. Persons making written submissions should file six copies thereof with the Secretary, Securities and Exchange Commission, 450 Fifth Street, NW, Washington, DC 20549–0609. Copies of the submission, all subsequent amendments, all written statements with respect to the proposed rule change that are filed with the Commission, and all written communications relating to the proposed rule change between the Commission and any person, other than those that may be withheld from the public in accordance with the provisions of 5 U.S.C. 552, will be available for inspection and copying in the Commission's Public Reference Room. Copies of such filing will also be available for inspection and copying at the principal office of the NYSE. All submissions should refer to File No. SR–NYSE–99–37 and should be submitted by November 5, 1999.

IV. Commission's Findings and Order Granting Accelerated Approval of Proposed Rule Change

The Commission finds that the proposed rule change is consistent with the Act and the rules and regulations thereunder[10] applicable to a national

[4] The revised Forms U–4 and U–5 were approved by the Commission on June 25, 1999. *See* Release No. 34–41560 (June 25, 1999), 64 FR 36059 (July 2, 1999) (File No. SR–NASD–98–96).

[5] *Id.*

[6] Question 23I(2) on the Proposed U–4.

[7] Question 16 and 17 on the Proposed U–5.

[8] 15 U.S.C. 78f(b)(5).

[9] 15 U.S.C. 78f(c).

[10] Pursuant to Section 3(f) of the Act, the Commission has considered the proposed rule's impact on efficiency, competition, and capital formation. The Commission notes that the forms and the CRD system provide self-regulatory organizations, including the NYSE, with a

securities exchange. In particular, the Commission believes that the proposed rule change is consistent with Section 6(b)(5) [11] which requires, among other things, that the rules of an exchange be designed to foster cooperation and coordination with persons engaged in regulating, clearing, settling, processing information with respect to, and facilitating transactions in securities, not to permit unfair discrimination among customers, issuers, brokers or dealers, and, in general, to protect investors and the public interest.

Additionally, the Commission believes that the revised Forms U–4 and U–5 will assist the Exchange in its registration and oversight functions by providing the Exchange with more relevant information about persons associated with members and member organizations. Moreover, in the future, it is anticipated that non-NASD members of the NYSE will be able to file the forms electronically through Web CRD. Electronic filing should help expedite the registration process for non-NASD members.

The Commission finds good cause for approving the proposed rule change prior to the thirtieth day after the date of publication of notice thereof in the **Federal Register.** The Commission notes that the forms have previously been approved by the Commission and are currently in effect.[12] The Commission also notes that the previous filing was submitted for the requisite notice and comment period, and the commission received no public comments. Furthermore, the proposed rule change raises no new issue of regulatory concern. The Commission believes, therefore, that granting accelerated approval to the propsoed rule change is appropriate and consistent with Section 6 [13] of the Act.

It is therefore ordered, pursuant to Section 19(b)(2) of the Act,[14] that the proposed rule change (SR–NYSE–99–37) is hereby approved on an accelerated basis.

For the Commission, by the Division of Market Regulation, pursuant to delegated authority.[15]

Margaret H. McFarland,

Deputy Secretary.

[FR Doc. 99–26893 Filed 10–14–99; 8:45 am]

BILLING CODE 8010–01–M

centralized and efficient means of maintaining information on member firms and their associated persons. 15 U.S.C. 78c(f).

[11] 15 U.S.C. 78f(b)(5).

[12] *See supra* note 4.

[13] 15 U.S.C. 78f.

[14] 15 U.S.C. 78s(b)(2).

[15] 17 CFR 200.30–3(a)(12).

SECURITIES AND EXCHANGE COMMISSION

[Release No. 34–41992; File No. SR–NYSE–99–22]

Self-Regulatory Organizations; New York Stock Exchange, Inc.; Order Granting Approval to Proposed Rule Change Relating to Equity-Linked Debt Securities

October 7, 1999.

I. Introduction

On May 28, 1999, the New York Stock Exchange, Inc. (''NYSE'' or ''Exchange'') submitted to the Securities and Exchange Commission (''Commission''), pursuant to Section 19(b)(1) of the Securities Exchange Act of 1934 (''Act''),[1] and Rule 19b–4 thereunder,[2] a proposed rule change amending Paragraph 703.21 of its Listed Company Manual (''Manual''), the listing of equity-linked debt securities (''ELDS'').

The proposed rule change was published for comment in the **Federal Register** on July 14, 1999.[3] No comments were received on the proposal. This order approves the proposal.

II. Description of the Proposal

The Exchange is proposing to amend its listing criteria for ELDS. The amendment deals with the minimum required term of such securities, and substitutes a one-year minimum for all ELDS (domestic and non-U.S.) for the current requirement that the securities have a term of two to seven years (three year maximum for non-U.S. securities).

ELDS are non-convertible debt of an issuer where the value of the debt is based, at least in part, on the value of another issuer's common stock or non-convertible preferred stock. Because ELDS are a derivative product related to the underlying stock, the Exchange trades ELDS on the equity trading floor together with the underlying stock (if such stock is listed).

Paragraph 703.21 of the Manual details the Exchange's listing standards for ELDS. Among other things, these standards require that the ELDS have a term of two to seven years, but not more than three years for ELDS based on the price of a non-U.S. issuer. The Exchange initially proposed these limits as a conservative measure to help ensure that the trading of ELDS does not have an adverse effect on the liquidity of the underlying stock, and is not used in a manipulative manner. The limits on the terms for ELDS contrast with the Exchange's general requirements for derivative instruments. Specifically, for warrants (Paragraph 703.12 of the Manual), foreign currency and currency index warrants (Paragraph 703.15 of the Manual), contingent value rights (Paragraph 703.18 of the Manual) and ''other securities'' (Paragraph 703.19 of the Manual), the Exchange requires only that the security have a minimum life of one year.

III. Discussion

After careful review, the Commission finds that the proposed rule change is consistent with the requirements of the Act and the rules and regulations thereunder applicable to a national securities exchange,[4] and in particular, with the requirements of Section 6(b)(5).[5] Specifically, the Commission finds that providing for a minimum one year term for all ELDS is designed to remove impediments to and perfect the mechanism of a free and open market and a national market system. The Commission believes that it will be less confusing for issuers and investors alike and beneficial to the mechanism of a free and open market, if the listing standards for ELDS conform to the listing standards of the Exchange's other hybrid products found in Section 703 of the Manual.[6] Generally those securities share the following listing criteria: 1 million of the applicable security outstanding, at least 400 holders, at least $4 million aggregate market value, and a minimum life of one year.[7]

The Commission notes that in the nearly six years that the Exchange has traded ELDS, the Exchange has not discovered any adverse effects of this instrument. In addition, the Exchange has verified that it has adequate surveillance procedures to monitor for possible manipulation of ELDS as well as the related equity securities.[8] The Exchange has also agreed to notify the Commission in advance if the Exchange intends to list ELDS of a non-U.S. company issuer and the issue has a term

[1] 15 U.S.C. 78s(b)(1).

[2] 17 CFR 240.19b–4.

[3] Securities Exchange Act Release No. 41608 (July 8, 1999), 64 FR 38063 (July 14, 1999).

[4] In approving this rule change, the Commission has considered the proposed rule's impact on efficiency, competition, and capital formation. 15 U.S.C. 78c(f).

[5] 15 U.S.C. 78f(b)(5).

[6] *See* Manual Paragraphs 703.12 (warrants), 703.15 (foreign currency and currency index warrants), 703.18 (contingent value rights), and 703.19 (other securities).

[7] *Id.* Other requirements may also apply.

[8] Telephone conversation between Vincent Patton, Assistant Vice-President, Structured Securities, NYSE, Judy Bryngil, Vice-President, Market Trading Analysis, NYSE, and Terri Evans, Attorney, Division of Market Regulation (''Division''), Commission, on July 23, 1999.

of more than three years.[9] The Exchange believes that this rule change will provide issuers with more flexibility in developing ELDS and thus provide greater investment choices in the market. The Commission believes that this added flexibility will encourage innovation without having an adverse effect on investor protection.

IV. Conclusion

It is therefore ordered, pursuant to Section 19(b)(2) of the Act,[10] that the proposed rule change (SR–NYSE–99–22) is approved.

For the Commission, by the Division of Market Regulation, pursuant to delegated authority.[11]

Margaret H. McFarland,

Deputy Secretary.

[FR Doc. 99–26896 Filed 10–14–99; 8:45 am]

BILLING CODE 8010–10–M

SECURITIES AND EXCHANGE COMMISSION

[Release No. 34–41983; International Series Release No. 1206; File No. SR–PCX–98–29]

Self-Regulatory Organizations; Pacific Exchange, Inc.; Order Approving Proposed Rule Change and Notice of Filing and Order Granting Accelerated Approval of Amendment No. 1 to Proposed Rule Change Relating to the Listing and Trading of Investment Company Units, Including World Equity Benchmark Shares (''WEBS'')

October 6, 1999.

I. Introduction

On June 18, 1998, the Pacific Exchange, Inc. (''Exchange'' or ''PCX'') filed with the Securities and Exchange Commission (''Commission''), pursuant to Section 19(b)(1) of the Securities Exchange Act of 1934 (''Act'')[1] and Rule 19b–4 thereunder,[2] a proposed rule change to adopt rules governing the listing and trading of Investment Company Units, including World Equity Benchmark Shares'' (''WEBS™'').[3] The proposed rule change was published for comment in the **Federal Register** on November 3, 1998.[4] The Commission did not receive any comments on the proposal. The Exchange submitted Amendment No. 1 to the proposal on May 13, 1999.[5] This order approves the amended proposed rule change and accelerates approval of Amendment No. 1.

II. Description of the Proposal

A. Standards for Listing and Trading Investment Company Units

The Exchange seeks to adopt new rules to accommodated the trading of Investment Company Units (''Units''), whether by Exchange listing or pursuant to unlisted trading privileges.[6] A Unit is a security that represents an interest in a registered investment company (''Investment Company''), which Investment Company is organized as a unit investment trust, open-end management investment company, or similar entity.

Under the Exchange's proposed listing standards, an Investment Company that issues Units must: (i) hold securities comprising, or otherwise based on or representing an interest in, an index or portfolio of seucrities; or (ii) hold securities in another registered investment company that holds securities comprising, or otherwise based on or representing an interest in, an index or portfolio of securities. An index or portfolio may be revised as necessary or appropriate to maintain the quality and character of the index or portfolio.

In addition, the Investment Company must issue Units in a specified aggregate number in return for a deposit (''Deposit''). The Deposit must consist of: (i) a specified number of shares of securities that comprise the index or portfolio, or are otherwise based on or represent an investment in securities comprising such index or portfolio, and/or a cash amount; or (ii) shares of a registered investment company, which investment company holds securities comprising, or otherwise based on or representing an interest in, an index or portfolio of securities, and/or a cash amount. Units must be redeemable, directly or indirectly, from the Investment Company for securities and/or cash then comprising the Deposit.[7] Units must pay holders periodic cash payments corresponding to the regular cash dividends or distributions declared with respect to the securities held by the Investment Company, less applicable expenses and charges. At least 300,000 Units must be outstanding before trading in a series of such Units may begin on the Exchange.

Each series of Units traded on the Exchange must be based on a specified index or portfolio of securities. The value of the index or portfolio must be calculated and disseminated to the public at least once per business day.[8] However, if the securities representing at least half the value of the index or portfolio are securities of a single country other than the United States, the value of the index or portfolio may be calculated and disseminated to the public at least once per business day in that country. Units may be either certified or issued in the form of a single global certificate.

The Exchange would be permitted to consider suspending trading and delisting (if applicable) a series of Units if: (i) after the initial twelve-month period beginning upon the commencement of trading of a series of Units, there are fewer than 50 record and/or beneficial holders of Units for 30 or more consecutive trading days; (ii) the value of the index or portfolio of securities on which the series is based is no longer calculated or available; or (iii) such other event occurs or condition exists which, in the opinion of the Exchange, makes further dealings

---

[9] Telephone conversation between Vincent Patton, Assistant Vice-President, Structured Securities, NYSE, and Nancy Sanow, Senior Special Counsel, Division, Commission on July 8, 1999.

[10] 15 U.S.C. 78s(b)(2).

[11] 17 CFR 200.30–3(a)(12).

[1] 15 U.S.C. 78s(b)(1).

[2] 17 CFR 240.19b–4.

[3] ''World Equity Benchmark Shares'' and ''WEBS'' are service marks of Morgan Stanley Group, Inc.

[4] *See* Securities Exchange Act Release No. 40603 (Oct. 26, 1998), 63 FR 59354 (Nov. 3, 1998).

[5] In Amendment No. 1, the Exchange: (i) provided confidential surveillance procedures; (ii) stated its intent to trade WEBS pursuant to unlisted trading privileges; (iii) proposed to delay the trading of Malaysian WEBS due to Malaysian currency restrictions; (iv) provided rule language clarifying that Exchange specialists may redeem or create WEBS only on the same terms and conditions as any other investor and only at the net asset value; (v) explained how the Exchange will review the creation or redemption of WEBS by Exchange specialists; (vi) specified how the net asset values for Index Series will be disseminated; and (vii) confirmed that Exchange members may rely on certain exemptive and no-action relief that the Commission previously provided to the American Stock Exchange. *See* Letter from Robert P. Pacileo, Staff Attorney, Regulatory Policy, Exchange, to Michael A. Walinskas, Associate Director, Division of Market Regulation Commission, dated May 11, 1999 (''Amendment No. 1'').

[6] Pursuant to Section 12(f) of the Act and the rules thereunder, a national securities exchange may extend unlisted trading privileges to a security listed and registered on another national securities exchange if certain conditions are satisfied. *See* 15 U.S.C. 781(f) and 17 CFR 240.12f–1, 12f–2, 12f–3, 12f–4, and 12f–5.

[7] For example, as discussed below in Section II(B), WEBS are only redeemable from the Foreign Fund, Inc. in ''Creation Unit'' sizes. *See* note 11 *infra* and accompanying text for a description of the various Creation Unit sizes.

[8] The Commission generally believes that updating values on a real-time basis throughout the trading day is essential to any securities product. In this regard, the Commission notes that the Exchange will also disseminate an indicative optimized portfolio value (''Value''), which closely approximates the value of the portfolio of securities comprising each WEBS series, at least every fifteen seconds during regular trading hours. While the Values disseminated by the Exchange will not be the official values for the portfolios of securities comprising each WEBS series, the Values are designed to accurately reflect the value of each WEBS portfolio and to provide investors with timely access to important market information during trading hours.

on the Exchange inadvisable. In addition, the Exchange would be allowed to remove Units from trading and listing (if applicable) upon termination of the issuing Investment Company or upon the termination of listing of the Units on their primary market, if the primary market is not the Exchange.

B. Trading of WEBS

Upon approval of the proposed rule change, the Exchange intends to trade a specific class of Units—WEBS—pursuant to unlisted trading privileges. WEBS are issued by Foreign Fund, Inc. (''Fund'') and are structured as shares of separate series (''Index Series''). Each Index Series invests primarily in the equity securities traded in a designated market in an effort to track the performance of a specified equity market index.

Currently, the Fund offers seventeen WEBS Index Series based on seventeen Morgan Stanley Capital International (''MSCI'') Indices (individually ''MSCI Index'' and collectively ''MSCI Indices''). The countries whose exchange markets are represented by the seventeen MSCI Indices are: Australia, Austria, Belgium, Canada, France, Germany, Hong Kong, Italy, Japan, Malaysia,[9] Mexico, Netherlands, Singapore, Spain, Sweden, Switzerland, and the United Kingdom. The Commission has already approved proposed rule changes to accommodate the listing and trading of these seventeen WEBS series on the American Stock Exchange (''Amex'') and to permit the trading of the WEBS series on the Chicago Stock Exchange (''CHX'') pursuant to unlisted trading privileges.[10] Both the Amex and CHX currently trade all seventeen WEBS series.

The investment objective of each WEBS series is to provide investment results that correspond generally to the aggregate price and yield performance of publicly traded securities in particular markets, as represented by specific MSCI Indices. Each WEBS series will use a ''passive'' or indexing investment approach, which attempts to approximate the investment performance of its benchmark index through quantitative analytical procedures.

A WEBS series normally will invest at least 95% of its total assets in stocks that are represented in the relevant MSCI Index and will at all times invest at least 90% of its total assets in such stocks. A WEBS series will not hold all of the issues that comprise the subject MSCI Index, but will attempt to hold a representative sample of the securities comprising the MSCI Index in a technique known as ''portfolio sampling.''

The Fund will issue and redeem WEBS of each Index Series only in aggregations of shares specified for each Index Series (each aggregation is a ''Creation Unit''). The number of shares per Creation Unit will range from 40,000 to 600,000.[11] Following the issuance of WEBS in Creation Unit aggregations, WEBS may be traded on the Exchange in lots of any size.

C. Structure of the MSCI Indices

MSCI generally seeks to have 60% of the capitalization of a country's stock market reflected in the MSCI Index for such country. The MSCI Indices seek to balance the inclusiveness of an ''all share'' index against the replicability of a ''blue chip'' index. MSCI applies the same criteria and calculation methodology across all markets for all indices, developed and emerging.

All single-country MSCI Indices are market capitalization weighted. For countries that restrict foreign ownership, MSCI calculates two types of indices: the MSCI Index and an additional index call the ''Free Index.'' The Free Index excludes companies and share classes that may not be purchased by foreigners. MSCI currently calculates Free Indices for Singapore and Mexico, and for those regional and international indices which include such markets. The Singapore and Mexico WEBS series will be based on the Free Indices for those countries.

All MSCI Indices are calculated daily. The calculation method weights stocks in an MSCI Index by their beginning-of-period market capitalization. Share prices are ''swept clean'' daily and adjusted for any rights issues, stock dividends, or splits. The MSCI Indices presently are calculated in each market's local currency,[12] in U.S. dollars, without dividends, and with dividends reinvested.

Each MSCI Index underlying a WEBS series is calculated by MSCI for each trading day in the applicable market based on official closing prices taken from the predominant exchange in such market. For each trading day, MSCI publicly disseminates each MSCI Index value for the previous day's close. MSCI Indices are reported periodically in major financial publications and also are available through vendors of financial information.

The Fund will cause to be made available daily the names and required number of shares of each of the securities to be deposited in connection with the issuance of WEBS in Creation Unit size aggregations for each WEBS series. Also included will be information relating to the required cash payment representing, in part, the amount of accrued dividends applicable to such WEBS series. This information will be made available by the Fund Advisor to any National Securities Clearing Corporation (''NSCC'') participant requesting such information. In addition, such information may be requested directly from the Fund Distributor.

D. Disclosure to Market Participants

The Fund Administrator, PFPC, Inc., will calculate the net asset value (''NAV'') for each Index Series each trading day as of 4:00 P.M., Eastern Standard Time. The NAVs will be made available to the public by the Fund Distributor by means of a toll-free number and will also be accessible to

[9] Although the Exchange seeks approval to trade the Malaysia Index Series WEBS pursuant to unlisted trading privileges, the Exchange will not immediately trade such WEBS due to Malaysian currency restrictions. The Exchange will notify the Commission before the start of trading in Malaysian Index Series WEBS and, if required, will submit a rule filing under Section 19(b) of the Act. *See* Amendment No. 1 *supra* note 5.

[10] *See* Securities Exchange Act Release Nos. 36947 (Mar. 8, 1996), 61 FR 10606 (Mar. 14, 1996) (approval of the Amex's request to list and trade Index Fund Shares, including WEBS); and 39117 (Sept. 22, 1997), 62 FR 50973 (Sept. 29, 1997) (approval of the CHX's request to trade WEBS pursuant to unlisted trading privileges). The Commission notes that the Amex has filed a proposed rule change to list for trading eleven additional WEBS based on MSCI Indices for Brazil, Greece, Indonesia, South Korea, Portugal, South Africa, Taiwan, Thailand, Turkey, the United States, and the EMU (European Economic and Monetary Union). The Amex's proposal is still pending with the Commission. *See* Securities Exchange Act Release No. 41322 (Apr. 22, 1999), 64 FR 23138 (Apr. 29, 1999).

[11] The number of shares per Creation Unit for the seventeen WEBS are: (1) Australia Index Series: 200,000; (2) Austria Index Series: 100,000; (3) Belgium Index Series: 40,000; (4) Canada Index Series: 100,000; (5) France Index Series: 200,000; (6) Germany Index Series: 300,000; (7) Hong Kong Index Series: 75,000; (8) Italy Index Series: 150,000; (9) Japan Index Series: 600,000; (10) Malaysia Index Series: 75,000; (11) Mexico (Free) Index Series: 100,000; (12) Netherlands Index Series: 50,000; (13) Singapore (Free) Index Series: 100,000; (14) Spain Index Series: 75,000; (15) Sweden Index Series: 75,000; (16) Switzerland Index Series: 125,000; and (17) United Kingdom Index Series: 200,000.

[12] To obtain foreign currency exchange rates, MSCI uses WM/Reuters Closing Spot Rates for all developed and emerging markets except those in Latin America. Because of the high volatility of currencies in some Latin American countries, MSCI continues to calculate its own rates for those countries. Under exception circumstances MSCI may elect to use an alternative exchange rate for any country if the WM/Reuters Closing Spot Rate is not believed to be representative for a given currency on a particular day.

NSCC participants through NSCC data. In addition, the NAVs will be provided to the Exchange by NSCC, and disseminated through the Exchange's Computerized Order Access System (''P/COAST'').

The Exchange will provide current WEBS pricing information by disseminating through the facilities of the Consolidated Tape Association (''CTA'') an indicative optimized portfolio value (''Value'') for each Index Series as calculated by Bloomberg, L.P. The Value will be disseminated on a per WEBS basis every fifteen seconds during the Exchange's regular trading hours.[13]

Before the start of trading in WEBS, the Exchange will distribute to its members an information circular that discusses the special characteristics and risks of trading WEBS. The circular will discuss the basic structure of WEBS, creation and redemption over WEBS, prospectus delivery to investors purchasing WEBS, applicable Exchange rules (*e.g.*, suitability rule), and dissemination of trading information. The Exchange will use existing and proposed surveillance procedures to surveil trading in WEBS, including specialist compliance with Exchange Rule 5.33(a), ''Specialist Trading,'' and proposed Commentaries .02 and .03 to Exchange Rule 5.33(a), which contemplate specialists engaging in transactions with the issuer of WEBS under certain circumstances.[14]

III. Discussion

The Commission finds that the proposed rule change is consistent with the requirements of the Act and the rules and regulations thereunder applicable to a national securities exchange and, in particular, with the requirements of Section 6(b)(5) of the Act.[15] The Commission believes that the Exchange's proposal to adopt new rules to accommodate the trading of Units, whether by Exchange listing or pursuant to unlisted trading privileges, will establish a framework to facilitate the trading of new products such as WEBS. The Commission also believes that the Exchange's proposal to trade WEBS pursuant to unlisted trading privileges will provide investors with a convenient way of participating in foreign securities markets, and could benefit investors through increased competition between the market centers trading the WEBS product. Moreover, the Commission believes that the Exchange's WEBS proposal would provide investors with increased flexibility in satisfying their investment needs by allowing them to buy and sell, at negotiated prices throughout the trading day, securities that replicate the performance of several stock portfolios.[16] Accordingly, as discussed below, the Commission finds that the proposal is consistent with the requirements of Section 6(b)(5) of the Act in that it facilitates transactions in securities, removes impediments to and perfects the mechanism of a free and open market and a national market system, and, in general, protects investors and the public interest.[17]

The Commission notes that WEBS should provide investors with several advantages compared to shares of standard, open-end management investment companies (*i.e.*, mutual funds). Specifically, investors will be able to trade WEBS continuously throughout the day in secondary markets at negotiated prices.[18] In contrast, Investment Company Act Rule 22c–1 [19] requires investors to purchase and redeem shares issued by an open-end management investment company based upon the NAV of the securities held by such company. The ability to trade WEBS throughout the day should allow investors to respond quickly to market changes and provide expanded opportunities to engage in hedging strategies. In addition, the cost of WEBS should make them affordable and attractive to individual retail investors who wish to purchase a single security that replicates the performance of a portfolio of foreign stocks.[20]

Although the market price of each WEBS series is derived from the value of the securities and cash held in the Fund, WEBS are not leveraged instruments. Rather, WEBS essentially are equity securities that represent an interest in a portfolio of stocks designed to track a specific MSCI Index. While the Commission believes that it is appropriate to regulate WEBS like other equity securities, the unique nature of WEBS raises certain trading, disclosure, and surveillance issues. The remainder of this order addresses these issues, although they are discussed in greater detail in the Amex WEBS Approval Order, where the Commission initially approved WEBS for trading as a new product.[21]

A. Trading of WEBS on the Exchange

Before an exchange begins to trade a security pursuant to unlisted trading privileges, Rule 12f–5 of the Act requires the exchange to have in place rules providing for transactions in such security.[22] The Commission finds that the Exchange has proposed adequate rules and procedures to govern the trading of WEBS on the Exchange. Specifically, WEBS will be deemed

[13] The Exchange recognizes that each Value is unlikely to reflect the value of all securities included in the applicable benchmark MSCI Index. In addition, the Exchange believes that the Value does not necessarily reflect the precise composition of the current portfolio of securities held by the Fund for each WEBS series at a particular moment. Therefore, the Exchange believes that the Value for each WEBS series disseminated during Exchange trading hours should not be viewed as a real-time update of the NAV of the Fund, which is calculated only once a day. The Exchange recognizes, however, that during the trading day the Value will closely approximate the value, per WEBS share, of the portfolio of securities for each WEBS series, except under unusual circumstances.

[14] Proposed Commentary .02 to Exchange Rule 5.33 states that, ''[s]pecialists may only redeem and create WEBS on the same terms and conditions as any other investor and only at the net asset value (''NAV''). Proposed commentary .03 to Exchange Rule 5.33 states that:

[n]othing in rule 5.33(a) should be construed to restrict a Specialist registered in a security issued by an investment company from purchasing and redeeming the listed security, or securities that can be subdivided or converted into the listed security from the issuer as appropriate to facilitate the maintenance of a fair and orderly market in the subject security.

[15] 15 U.S.C. 78f(b)(5).

[16] Unlike typical open-end investment companies, where investors have the right to redeem their shares on a per share basis, investors in WEBS can redeem them in creation unit size aggregations only.

[17] In approving this proposed rule change, the Commission has considered the proposal's impact on efficiency, competition, and capital formation. 15 U.S.C. 78c(f).

[18] The Commission believes that WEBS will not trade at a material discount or premium in relation to their net asset value, because of potential arbitrage opportunities. The potential for arbitrage should keep the market price of WEBS comparable to their net asset values; therefore, arbitrage activity likely will not be significant.

[19] Investment Company Act Rule 22c–1 generally provides that a registered investment company issuing a redeemable security, its principal underwriter, and dealers in that security may sell, redeem, or repurchase the security only at a price based on the net asset value next computed after receipt of an investor's request to purchase, redeem, or resell. *See* 17 CFR 270.22c–1. The net asset value of an open-end management investment company generally is computed once daily Monday to Friday as designated by the investment company's board of directors. The Commission granted WEBS an exemption from this provision to allow them to trade in the secondary market at negotiated prices.*See* Amex WEBS Approval Order, *infra* note 21.

[20] As of the close of trading on October 1, 1999, the Spain Index Series WEBS, which was valued at $25.375, was the highest priced of the seventeen listed WEBS series. The least expensive WEBS series was the Malaysia Index Series, value at $4.9375.

[21] *See* Securities Exchange Act Release No. 36947 (Mar. 8, 1996), 61 FR 10606 (Mar. 14, 1996) (''Amex WEBS Approval Order''). The Commission hereby incorporates by reference the discussion and rationale for approving WEBS as stated in the Amex WEBS Approval Order.

[22] Rule 12f–5 states that, ''[a] national securities exchange shall not extend unlisted trading privileges to any security unless the national securities exchange has in effect a rule or rules providing for transactions in the class or type of security to which the exchange extends unlisted trading privileges.'' 17 CFR 240.12f–5.

equity securities and will be subject to the Exchange's existing general rules that govern the trading of equity securities.[23] In addition, proposed Exchange Rules 3.2(k), ''Investment Company Units,'' and 3.5(h), ''Investment Company Units: Continued Listing Criteria,'' which contain specific listing and delisting criteria to accommodate the trading of Units, will apply to the trading of WEBS.[24] These provisions should help to ensure that a minimum level of liquidity exists in each WEBS series to facilitate the maintenance of fair and orderly markets. The delisting criteria will allow the Exchange to consider the suspension of trading and the delisting of a series of Units (including WEBS), if an event were to occur that made further dealings in such securities inadvisable. This provision will give the Exchange the requisite flexibility to suspend or delist trading in WEBS if circumstances warrant. Accordingly, the Commission believes that the Exchange's rules in general, and proposed Exchange Rules 3.2(k) and 3.5(h), in particular, provide adequate safeguards to prevent manipulative acts and practices and to protect investors and the public interest.[25]

B. Disclosure of Investors and Exchange Members

The Commission believes that the Exchange's proposal provides for adequate disclosure to investors relating to the terms, characteristics, and risks of trading WEBS. All investors purchasing WEBS on the Exchange will receive a prospectus regarding the specific WEBS product. Because the WEBS proposed to be traded on the Exchange will be in continuous distribution, the prospectus delivery requirements of the Securities Act of 1933 will apply to both the initial purchasers and to investors purchasing such WEBS in the secondary market on the Exchange. The prospectus will address the special characteristics of WEBS, including a statement regarding their redeemability and method of creation, and specify that WEBS are not individually redeemable.

The Exchange also drafted an information circular that will be distributed to all Exchange members before trading of WEBS begins on the Exchange. The Commission has reviewed this draft information circular and believes it adequately explains the unique characteristics and risks of WEBS. The circular also identifies Exchange member responsibilities. For example, before an Exchange member undertakes to recommend a transaction in WEBS, the member should make a determination that such WEBS transaction is suitable for its customer. The circular also addresses members' responsibility to deliver a prospectus to investors purchasing WEBS, and highlights that WEBS are redeemable only in Creation Unit size aggregations.[26] The Commission notes that the Exchange's draft information circular is very similar to the WEBS circulars prepared by the Amex and CHX that were previously reviewed by the Commission.

C. Dissemination of WEBS Portfolio Information

The Commission believes that the dissemination of the Values for the seventeen WEBS series will provide investors with timely and useful information concerning the value of WEBS, on a per WEBS basis. The Commission notes that this information will be disseminated through the facilities of the CTA and will closely approximate the value, per WEBS share, of the portfolio of securities for each WEBS series. The Values will be disseminated every 15 seconds during the Exchange's regular trading hours, and will be available to all investors, irrespective of the exchange market on which a transaction is executed. Also, because each Value is expected to closely track the applicable WEBS series, the Commission believes the Values will provide investors with adequate information to generally determine the intra-day value of a given WEBS series. The Commission expects the Exchange to monitor the disseminated Values and, if the Exchange determines that a Value does not closely track the applicable WEBS series, arrange to disseminate an adequate alternative.

D. Surveillance of WEBS Trading

The Commission notes that the Exchange submitted confidential surveillance procedures regarding the trading of WEBS on its equity floor. The Commission believes that the surveillance procedures adequately address concerns associated with the trading of WEBS, including concerns attendant to the purchase and redemption of Creation Units. Specifically, the Commission believes that the surveillance procedures should help the Exchange to monitor specialists purchasing and redeeming Creation Units, and ensure compliance with Exchange Rules 5.29(f), ''Specialist Responsibility,''[27] and 5.33(a), ''Specialist Trading.''

The Commission believes that adequate safeguards are in place to prevent the abuse of inside information relating to the composition of the MSCI Indices. In the Amex WEBS Approval Order, the Commission discussed abuse of information concerns that arise when a broker-dealer is involved in the development and maintenance of a stock index underlying a derivative product. The Commission believes that procedures to prevent the misuse of material, non-public information regarding changes to component stocks in the MSCI Indices have been adopted and should help to address concerns raised by Morgan Stanley's role in maintaining the MSCI Indices.

E. Specialist Activities

The Commission finds that it is consistent with the Act to allow a specialist registered in a security issued by an Investment Company to purchase or redeem the security from the issuer, as appropriate, to facilitate the maintenance of a fair and orderly market in that security. The Commission generally believes that such market activities should enhance liquidity in the security and facilitate a specialist's market making responsibilities. In addition, because a WEBS specialist will be required to purchase and redeem WEBS only on the

[23] Such general rules include, for example, margin and net capital rules, the short sale rule, trading halt provisions, customer suitability requirements, trading hours, and minimum trading increments.

[24] The Commission notes that the Exchange's rules for listing and delisting Units are substantially similar to companion rules adopted by the Amex and CHX.

[25] The Commission also believes that the proposed rule change should help protect investors and the public interest, and help perfect the mechanisms of a national market system, in that it will allow for the trading of WEBS on the Exchange pursuant to unlisted trading privileges, making WEBS more broadly available to the investing public.

[26] The Exchange confirmed with the Commission that PCX members may rely on certain exemptive and no-action relief regarding WEBS that the Commission previously provided to the Amex. The Commission gave to Amex exemptive relief from Rules 10a–1, 10b–6, 10b–7, 10b–10, 10b–13, and 10b–17 under the Act; and no-action relief for Section 11(d)(1) of the Act and Rules 11d1–2, 15c1–5 and 15c1–6 thereunder. To the extent that Regulation M supersedes Rules 10b–6 and 10b–7, Exchange members may continue to rely upon the relief regarding those two rules. *See* Letter from Robert P. Pacileo, Staff Attorney, Regulatory Policy, Exchange, to Michael A. Walinskas, Associate Director, Division of Market Regulation, Commission, dated May 11, 1999; and letter from Nancy J. Sanow, Assistant Director, Division of Market Regulation, Commission, to Donald R. Crawshaw, Sullivan & Cromwell, dated April 17, 1996.

[27] Exchange Rule 5.29(f) specifies that, ''a Specialist is to engage in a course of dealings for his own account to assist in the maintenance, insofar as reasonably practicable, of a fair and orderly market on the Exchange.''

same terms and conditions as any other investor (and only at the NAV), and Creation Unit transactions occur through the Fund Distributor, the Commission believes that the potential for abuse is minimized. Furthermore, the Exchange's surveillance procedures should help the Exchange to monitor specialist trading activity and determine whether a specialist's transaction was effected to maintain fair and orderly markets, or for some improper or speculative purpose. Finally, the Commission notes that its approval of this aspect of the Exchange's proposal does not address any other requirements or obligations under the federal securities laws that may be applicable.[28]

The Commission finds good cause for approving proposed Amendment No. 1 prior to the thirtieth day after the date of publication of notice of filing thereof in the **Federal Register.** Amendment No. 1 provides additional information responsive to Commission staff concerns and proposes several revisions that strengthen the Exchange's proposed rule change. First, Amendment No. 1 provides confidential surveillance procedures that describe how the Exchange will monitor trading in WEBS. The Commission believes that the procedures are well designed and will help the Exchange detect trading abuses and safeguard the integrity of WEBS trading on the Exchange. Amendment No. 1 also proposes Commentaries .02 and .03 to Exchange Rule 5.33(a), which clarify that: (i) Exchange specialists may redeem and create WEBS only on the same terms and conditions as any other investor, and only at the NAV; and (ii) Exchange specialists registered in an Investment Company security may purchase and redeem the listed Investment Company security, or securities that can be subdivided or converted into the listed Investment Company security, from the issuer as appropriate to facilitate the maintenance of a fair and orderly market in the subject security. These provisions establish appropriate limitations on the trading activities of Exchange specialists, but also provide the flexibility necessary to maintain fair and orderly markets.

Amendment No. 1 also clarifies several aspects of the proposal, including: (i) the Exchange's intent to trade WEBS pursuant to unlisted trading privileges; (ii) treatment of the Malaysian Index Series WEBS; (iii) review of specialist trading activity in WEBS; and (iv) the dissemination of NAVs. Lastly, Amendment No. 1 confirms that Exchange members may rely on certain exemptive and no-action relief regarding WEBS, which the Commission previously provided to the Amex.[29]

Based on the above, the Commission finds that good cause exists, consistent with Sections 6(b)(5) and 19(b)(2) of the Act,[30] to accelerate approval of Amendment No. 1 to the proposed rule change.

IV. Solicitation of Comments

Interested persons are invited to submit written data, views, and arguments concerning Amendment No. 1, including whether Amendments No. 1 is consistent with the Act. Persons making written submissions should file six copies thereof with the Secretary, Securities and Exchange Commission, 450 Fifth Street, NW., Washington, DC 20549–0609. Copies of the submissions, all subsequent amendments, all written statements with respect to the proposed rule change that are filed with the Commission, and all written communications relating to the proposed rule change between the Commission and any persons, other than those that may be withheld from the public in accordance with the provisions of 5 U.S.C. 552, will be available for inspection and copying in the Commission's Public Reference Section, 450 Fifth Street, NW., Washington, DC 20549. Copies of such filing will also be available for inspection and copying at the principal office of the Exchange. All submissions should refer to File No. SR–PCX–98–29 and should be submitted by November 5, 1999.

V. Conclusion

It is Therefore ordered, pursuant to Section 19(b)(2) of the Act,[31] that the proposed rule change (SR–PCX–98–29), as amended, is approved.

For the Commission, by the Division of Market Regulation, pursuant to delegated authority.[32]

Margaret H. McFarland,

Deputy Secretary.

[FR Doc. 99–26897 Filed 10–14–99; 8:45 am]

BILLING CODE 8010–01–M

[28] The Commission notes that with respect to WEBS, broker-dealers and other persons are cautioned in the prospectus and/or the Fund's Statement of Additional Information that some activities on their part may, depending on the circumstances, result in their being deemed statutory underwriters and subject them to the prospectus delivery and liability provisions of the Securities Act of 1933.

[29] *See supra* note 5 for a more detailed description of Amendment No. 1.

[30] 15 U.S.C. 78f(b)(5) and 78s(b)(2).

[31] 15 U.S.C. 78s(b)(2).

[32] 17 CFR 200.30–3(a)(12).

SECURITIES AND EXCHANGE COMMISSION

[Release No. 34–41991; File No. SR–Phlx–99–27]

Self-Regulatory Organizations; Notice of Filing and Immediate Effectiveness of Proposed Rule Change and Amendment Numbers 1 and 3 Thereto by the Philadelphia Stock Exchange, Inc. Relating to the Exchange's Allocation, Evaluation and Securities Committee Provisions

October 7, 1999.

Pursuant to Section 19(b)(1) of Securities Exchange Act of 1934 (''Act''),[1] and Rule 19b–4 thereunder,[2] notice is hereby given that on October 1, 1999, the Philadelphia Stock Exchange, Inc. (''Phlx'' or ''Exchange'') filed with the Securities and Exchange Commission (''Commission'') the proposed rule change.[3] On October 1, 1999, the Exchange submitted Amendment No. 1 to the proposed rule change[4] and on October 5, 1999, the Exchange submitted Amendment No. 2.[5] The proposed rule change, as amended, is described in Items I, II, and III below, which Items have been prepared by the Exchange. The Commission is publishing this notice to solicit comments on the proposed rule change from interested persons.

I. Self-Regulatory Organization's Statement of the Terms of Substance of the Proposed Rule Change

The Phlx proposes to amend Exchange Rule 511(b), Specialist Performance Evaluation, to reflect the view of the Allocation, Evaluation and Securities Committee (''Committee'') that voluntary delisting of options book by option specialists, done in the best interest of the Exchange and to encourage a better use of Exchange and

[1] 15 U.S.C. 78s(b)(1).

[2] 17 CFR 240.19b–4.

[3] The Exchange submitted its proposal on September 9, 1999. However, because of the substantive nature of Amendment No. 1, the Commission deems the proposal effective on October 1, 1999, the date of filing of Amendment No. 1.

[4] In Amendment No. 1, the Exchange amended its proposed rule language to clarify that only voluntary delisting of options books done in the best interest of the Exchange will not be viewed negatively by the Committee. *See* Letter from Richard S. Rudolph, Counsel, Phlx, to Terry Evans, Attorney, Division of Market Regulation (''Division''), Commission, dated September 30, 1999 (''Amendment No. 1'').

[5] In Amendment No. 2, the Exchange made a minor technical change to its proposed rule language to conform such language to the rule as currently drafted. *See* Letter from Richard S. Rudolph, Counsel, Phlx, to Terry Evans, Attorney, Division, Commission, dated October 4, 1999 (''Amendment No. 2'').

specialist resources, will not be considered negatively in the Committee's decision making process.

Specifically, the proposed amended rule will include a clause reflecting that, solely with respect to options books allocations or reallocations, past or contemplated voluntary delisting of options books by options specialists, done in the best interest of the Exchange, will not be viewed negatively by the Committee in making allocation and reallocation decisions. The text of the proposed rule change follows. New text is italicized.

Specialist Performance Evaluation

Rule 511. (a) No change.

(b) Allocations. The Committee shall allocate new equity books and options classes, approved transfers or reallocate existing equity books and options classes to applicants based on the results of the evaluations conducted pursuant to Rule 515 and such other factors as the Committee deems appropriate. Among the factors that the Committee may consider in making such decisions are: the number and type of securities in which applicants are currently registered; the personnel, capital and other resources of the applicant; recent allocation decisions within the past eighteen months; the desirability of encouraging the entry of new specialists into the Exchange's market; order flow commitments; any prior transfers of specialist privileges by the applicant and the reasons therefore and such policies as the Board instructs the Committee to follow in allocating or reallocating securities. *Solely with respect to options book allocations or reallocations, past or contemplated voluntary delisting of options books by options specialists, done in the best interest of the Exchange, will not be viewed negatively by the Committee in making allocation and reallocation decisions.* Solvely with respect to equity book allocations or reallocations, the Committee may consider the number of primary issues in which the applicant is currently registered; the number of securities the applicant currently has registered on PACE and the level of commitments he has made; and securities the applicant recently has applied to remove from PACE or in which the applicant has resigned as specialist. Recognition is given that evaluation results may not be available for new specialist units or recently reorganized Registrants. The Committee may establish separate or additional criteria for evaluating new or recently reorganized Registrants, particularly where evaluation results are unavailable or are only available for a limited period of time. All allocations shall initially be made on a temporary basis for a period of up to 90 days within which time the Committee may commence a special review pursuant to Rule 515(b). The Committee is empowered to grant equity books or option classes for a limited period of time or subject to such other terms and conditions as it deems appropriate.

* * * * *

II. Self-Regulatory Organization's Statement of the Purpose of, and Statutory Basis for, the Proposed Rule Change

In its filing the Commission, the Exchange included statements concerning the purpose of and basis for the proposed rule change and discussed any comments it received on the proposed rule change. The text of these statements may be examined at the places specified in Item IV below. The Exchange has prepared summaries, set forth in Sections A, B, and C below, of the most significant aspects of such statements.

A. Self-Regulatory Organization's Statement of the Purpose of, and Statutory Basis for, the Proposed Rule Change

1. Purpose

The purpose of the proposed rule change is to allow options specialists to voluntarily delist certain inactive options books in the best interest of the Exchange, due to recent concerns raised regarding computer capacity and physical space on the Exchange's Options Trading Floor, without being penalized by the Committee in its consideration of future applications for options specialist privileges.

To maximize trading floor space and computer capacity, it may become important for options specialist units to relinquish less active options books. However, there may be a perception among options specialists that delisting options books might be viewed in a negative light by the Committee in making future allocation and reallocation decisions.[6] Consistent with Rule 511(b), the Phlx Board of Governors has instructed the Committee not to view voluntary delisting of options books by options specialist units in a negative light.

In response, the Phlx is proposing to codify the Board's and the Committee's view that such voluntary delisting, done in the best interest of the Exchange and to encourage a better use of Exchange and specialist resources, will not be considered negatively in the Committee's decision making process.

Furthermore, the Committee has determined that, in the best interest of the Exchange, options books that are voluntarily delisted by options specialist units will not be automatically resolicited for assignment to other options specialists on the Exchange Options Floor.[7] However, options specialists wishing to be assigned as the specialist in an options book that has been voluntarily delisted by another options specialist unit will not be precluded from submitting an Application for Approval as an Options Specialist Unit in such an options book to the Committee. Upon receipt of such an application, the Committee will consider, and vote upon, the application in accordance with the applicable Exchange rules.[8]

2. Statutory Basis

For these reasons, the proposed rule change is consistent with Section 6 of the Act[9] in general, and in particular, with Section 6(b)(5),[10] in that it is designed to remove impediments to and perfect the mechanism of a free and open market and a national market system, as well as to protect investors and the public interest, by allowing Exchange options specialist to voluntarily delist options books to ensure that adequate computer capacity and physical floor space exist on the Exchange Options Floor to serve the marketplace.

B. Self-Regulatory Organization's Statement on Burden on Competition

The Phlx does not believe that the proposed rule change will impose any inappropriate burden on competition.

[6] Currently, Exchange Rule 511(b) enumerates specific factors the Committee may consider in making option allocation, transfer and reallocation decisions, including the number and type of securities in which applicants are currently registered; the personnel, capital and other resources of the applicant; recent allocation decisions within the past eighteen months; the desirability of encouraging the entry of new specialists into the Exchange's market; order flow commitments; any prior transfers of specialist privileges by the applicant and the reasons therefor and such policies as the Board instructs the Committee to follow in allocating and reallocating securities.

[7] The Exchange believes that under Article X, Section 10–7, the Committee has the authority to determine that options books that are voluntarily delisted by options specialist units will not be automatically resolicited for assignment to other options specialist. Telephone conversation between Richard S. Rudolph, Counsel, Phlx, and Terry Evans, Attorney, Division, Commission, on October 7, 1999.

[8] *See* Exchange Rules 500–599.

[9] 15 U.S.C. 78f.

[10] 15 U.S.C. 78f(b)(5).

C. Self-Regulatory Organization's Statement on Comments on the Proposed Rule Change Received From Members, Participants, or Others

The Exchange neither solicited nor received written comments.

III. Date of Effectiveness of the Proposed Rule Change and Timing for Commission Action

The foregoing proposed rule change, as amended: (1) Does not significantly affect the protection of investors or the public interest; (2) does not impose any significant burden on competition; and (3) does not become operative for 30 days from the date on which it was filed. In addition, the Exchange provided the Commission with written notice of its intent to file the proposed rule change at least five business days prior to the filing date. Therefore, it has become effective pursuant to section 19(b)(3)(A) of the Act [11] and Rule 19b–4(f)(6) [12] thereunder.

At any time within 60 days of the filing of the proposed rule change, the Commission may summarily abrogate such rule change if it appears to the Commission that such action is necessary or appropriate in the public interest, for the protection of investors, or otherwise in furtherance of the purposes of the Act.

IV. Solicitation of Comments

Interested persons are invited to submit written data, views and arguments concerning the foregoing, including whether the proposed rule change, as amended, is consistent with the Act. Persons making written submissions should file six copies thereof with the Secretary, Securities and Exchange Commission, 450 Fifth Street, NW., Washington, DC 20549–0609. Copies of the submission, all subsequent amendments, all written statements with respect to the proposed rule change that are filed with the Commission, and all written communications relating to the proposed rule change between the Commission and any person, other than those that may be withheld from the public in accordance with the provisions of 5 U.S.C. 552, will be available for inspection and copying in the Commission's Public Reference Room in Washington, DC. Copies of such filing will also be available for inspection and copying at the principal office of the Exchange. All submissions should refer to File No. SR–Phlx–99–27 and should be submitted by November 5, 1999.

[11] 15 U.S.C. 78s(b)(3)(A).

[12] 17 CFR 240.19b–4(f)(6).

For the Commission, by the Division of Market Regulation, pursuant to delegated authority.[13]

Margaret H. McFarland,

Deputy Secretary.

[FR Doc. 99–26895 Filed 10–14–99; 8:45 am]

BILLING CODE 8010–01–M

[13] 17 CFR 200.30–3(a)(12).

DEPARTMENT OF STATE

[Public Notice 3136]

Culturally Significant Objects Imported for Exhibition

Determinations: ''The Arts of Korea: Ancient to Modern''

DEPARTMENT: United States Department of State.

ACTION: Notice.

SUMMARY: Notice is hereby given of the following determinations: Pursuant to the authority vested in me by the Act of October 19, 1965 (79 Stat. 985, 22 U.S.C. 2459), the Foreign Affairs Reform and Restructuring Act of 1998 (112 Stat. 2681 et seq.), and Delegation of Authority No. 234 of October 1, 1999, I hereby determine that the objects to be included in the exhibit, ''The Arts of Korea: Ancient to Modern'' imported from abroad for the temporary exhibition without profit within the United States, are of cultural significance. These objects are imported pursuant to loan agreements with the foreign lenders. I also determine that the exhibition or display of the exhibit objects at the Los Angeles County Museum of Art, Los Angeles, California, from on or about October 20, 1999 to on or about October 11, 2001, is in the national interest. Public Notice of these determinations is ordered to be published in the **Federal Register**.

FOR FURTHER INFORMATION CONTACT: For further information, including a list of exhibit objects, contact Paul W. Manning, Attorney-Adviser, Office of the Legal Adviser, 202/619–5997, and the address is Room 700, United States Department of State, 301 4th Street, SW, Washington, DC 20547–0001.

Dated: October 8, 1999.

Evelyn S. Lieberman,

Under Secretary for Public Diplomacy and Public Affairs, United States Department of State.

[FR Doc. 99–26980 Filed 10–14–99; 8:45 am]

BILLING CODE 4710–08–P

STATE DEPARTMENT

[Public Notice #3132]

Overseas Security Advisory Council (OSAC) Meeting Notice; Closed Meeting

The Department of State announces a meeting of the U.S. State Department—Overseas Security Advisory Council on November 2, 3, and 4, at the Department of State in Washington, DC. Pursuant to section 10(d) of the Federal Advisory Committee Act and 5 U.S.C. 552b(c)(1) and (4), it has been determined the meeting will be closed to the public. Matters relative to classified national security information as well as privileged commercial information will be discussed. The agenda calls for the discussion of classified and corporate proprietary/security information as well as private sector physical and procedural security policies and protective programs at sensitive U.S. Government and private sector locations overseas.

For more information contact Marsha Thurman, Overseas Security Advisory Council, Department of State, Washington, DC 20522–1003, phone: 202–663–0869.

Dated: September 23, 1999.

Wayne Rychak,

Acting Director of the Diplomatic Security Service, Department of State.

[FR Doc. 99–26979 Filed 10–14–99; 8:45 am]

BILLING CODE 4710–24–P

DEPARTMENT OF STATE

[Delegation of Authority No. 234]

Delegation of Authority

By virtue of the authority vested in me as Secretary of State, including section 1 of the Basic Authorities Act (22 U.S.C. 2651a); the Foreign Affairs Reform and Restructuring Act of 1998 (112 Stat. 2681 *et seq.*); Reorganization Plan No. 2 of 1977 dated October 11, 1977; and executive orders specified below, I hereby delegate the following functions that are or were vested in the Director of the United States Information Agency or in that Agency and are now or will be vested in me:

Section 1. Delegation of Functions

(a) To the Under Secretary of State for Public Diplomacy and Public Affairs:

(1) International Educational and Cultural Exchange

The functions related to educational and cultural exchange, including functions provided for in: the Mutual

Educational and Cultural Exchange Act of 1961, as amended (the Fulbright-Hays Act) (22 U.S.C. 2451 *et seq.*); sections 1, 2, and 5 of Executive Order 11034, June 24, 1962; section 7(a)(2) of Reorganization Plan No. 2 of 1977; and sections 4 and 5 of Executive Order 12048, March 27, 1978.

(2) Dissemination of Information Abroad About the United States

The functions related to the dissemination of information abroad about the United States and related functions including those functions in the United States Information and Educational Exchange Act of 1948, as amended (the Smith-Mundt Act) (22 U.S.C. 1431 *et seq.*).

(3) Exchange Visitor Program

The functions in sections 101(a)(15)(J) and 212(j) of the Immigration and Naturalization Act (8 U.S.C. 1101(a)(15)(J) and 1182(j)), and section 641 of Public Law 104–208 (8 U.S.C. 1372(h)(2)(A)) (relating to designation of exchange visitor programs and related functions).

(4) North-South Center

The functions in the North South Center Act of 1991 (22 U.S.C. 2075) (relating to the operation of the Center for Cultural and Technical Interchange Between North and South).

(5) East-West Center

The functions in the Center for Cultural and Technical Interchange Act of 1960 (22 U.S.C. 2055) (relating to the operation of the Center for Cultural and Technical Interchange Between East and West).

(6) Cultural Property

The functions in Executive Order 12555 of March 10, 1986 delegating functions under the Convention on Cultural Property Implementation Act (19 U.S.C. 2601). Delegation of Authority 159 is hereby revoked.

(7) National Endowment for Democracy

The functions in the National Endowment for Democracy Act (22 U.S.C. 4412) (relating to the grant program with the National Endowment for Democracy).

(8) Broadcasting Board of Governors

Representation of the Secretary on the Broadcasting Board of Governors, including the authority to provide foreign policy guidance, pursuant to the United States International Broadcasting Act of 1994 (22 U.S.C. 6201 *et seq.*).

(9) Arts and Artifacts Indemnification

The functions in the Arts and Artifacts Indemnity Act (20 U.S.C. 971 *et seq.*) (relating to the certification of the national interest for exhibits to provide indemnification).

(10) Immunity from Judicial Seizure

The functions in Public Law 89–259 (79 Stat. 985) (22 U.S.C. 2459) (providing for immunity from judicial seizure for cultural objects imported into the U.S. for temporary exhibits).

(11) Board Memberships

Representation of the Secretary on:

(A) The Board of Trustees of the John F. Kennedy Center for the Performing Arts (20 U.S.C. 76h(a)).

(B) The Federal Council on the Arts and Humanities (20 U.S.C. 958).

(C) The President's Committee on the Arts and Humanities (Executive Order 12367, June 15, 1982) (one of two members appointed by the Secretary).

(D) United States Panel of the Joint Committee on United States—Japan Cultural and Educational Cooperation / Japan—United States Friendship Commission (22 U.S.C. 2901 *et seq.*) (one of two members appointed by the Secretary).

(12) Circular 175 Authority

Authority to negotiate, sign and terminate treaties and other international agreements and to authorize the negotiation, signature and termination of treaties and other international agreements by other United States Government officials.

(13) Other Functions

Other functions of the Director of the United States Information Agency or of that Agency and now vested in the Secretary which are not otherwise provided for in this delegation.

(b) To the Under Secretary for Management:

The functions related to recycling fees under section 810 of the Smith-Mundt Act, as amended (22 U.S.C. 1475e) and under Public Law 105–277, section 2412 (112 Stat. 2681–832).

(c) To the Assistant Secretary for Consular Affairs:

The functions related to waiver of the foreign residence requirement under the exchange visitor program pursuant to sections 212(e) and 214(l)(1)(A) of the Immigration and Naturalization Act (8 U.S.C. 1182(e) and 1184(l)(1)(A)).

Section 2. General Provisions

(a) Notwithstanding any other provision of this order, the Secretary of State or the Deputy Secretary of State may at any time exercise any function or authority delegated or reserved by this delegation of authority.

(b) Notwithstanding any provision of Section 1, the Under Secretary for Management shall exercise those functions related to the general management of the Department that are or were vested in the Director of USIA or the Agency and are now or will be vested in the Secretary.

(c) Functions delegated by this delegation of authority may be redelegated, to the extent consistent with law.

(d) Any reference in this delegation of authority to any act, order, determination, delegation of authority, regulation, or procedure shall be deemed to be a reference to such act, order, determination, delegation of authority, regulation, or procedure as amended from time to time.

(e) This delegation shall be published in the **Federal Register**.

Dated: October 1, 1999.

Madeleine K. Albright,

Secretary of State.

[FR Doc. 99–26978 Filed 10–14–99; 8:45 am]

BILLING CODE 4710–10–P

OFFICE OF THE UNITED STATES TRADE REPRESENTATIVE

United States-Israel Free Trade Area Implementation Act; Designation of Qualifying Industrial Zones

AGENCY: Office of the United States Trade Representative.

ACTION: Notice.

SUMMARY: Under the United States—Israel Free Trade Area Implementation Act (''the ''IFTA Act''), products of qualifying industrial zones encompassing portions of Israel and Jordan or Israel and Egypt are eligible to receive duty-free treatment. Effective upon publication of this notice, the United States Trade Representative, pursuant to authority delegated by the President, is designating the Al-Kerak Industrial Estate, the Ad-Dulayl Industrial Park, and the Al-Tajamouat Industrial City as qualifying industrial zones under the IFTA Act.

FOR FURTHER INFORMATION CONTACT: Laura Lane, Director for the Middle East and Mediterranean, (202) 395–9569, Office of USTR, 600 17th Street, NW, Washington, D.C. 20508.

SUPPLEMENTARY INFORMATION: Pursuant to authority granted under section 9 of the United States-Israel Free Trade Area Implementation Act of 1985, as amended (19 U.S.C. 2112 note), the President proclaimed certain tariff

treatment for the West Bank, the Gaza Strip, and qualifying industrial zones (Proclamation 6955 of November 13, 1996 (61 FR 58761)). In particular, the President proclaimed modifications to general notes 3 and 8 of the Harmonized Tariff Schedule of the United States: (a) To provide duty-free treatment to qualifying articles that are the product of the West Bank or Gaza Strip or a qualifying industrial zone and are entered in accordance with the provisions of section 9 of the IFTA Act; (b) to provide that articles of Israel may be treated as though they were articles directly shipped from Israel for the purposes of the United States—Israel Free Trade Area Agreement (''the Agreement'') even if shipped to the United States from the West Bank, the Gaza Strip, or a qualifying industrial zone, if the articles otherwise meet the requirements of the Agreement; and (c) to provide that the cost or value of materials produced in the West Bank, the Gaza Strip, or a qualifying industrial zone may be included in the cost or value of materials produced in Israel under section 1(c)(i) of Annex 3 of the Agreement, and that the direct costs of processing operations performed in the West Bank, the Gaza Strip, or a qualifying industrial zone may be included in the direct costs of processing operations performed in Israel under section 1(c)(ii) of Annex 3 of the Agreement.

Section 9(e) of the IFTA Act defines a ''qualifying industrial zone'' as an area that ''(1) encompasses portions of the territory of Israel and Jordan or Israel and Egypt; (2) has been designated by local authorities as an enclave where merchandise may enter without payment of duty or exercise taxes; and (3) has been specified by the President as a qualifying industrial zone.'' In Proclamation 6955, the President delegated to the United States Trade Representative the authority to designate qualifying industrial zones.

On March 13, 1998 (63 FR 12572), I designated the Irbid Qualifying Industrial Zone as a qualifying industrial zone under section 9 of the IFTA Act. Additionally, on March 19, 1999 (64 FR 13623), I designated the Gateway Projects Industrial Zone and the expanded Irbid Qualifying Industrial Zone as qualifying industrial zones under section 9 of the IFTA Act.

In an agreement dated September 16, 1999, the Government of Israel and the Government of Jordan agreed to the creation of three additional qualifying industrial zones: the Al-Kerak Industrial Estate, the Ad-Dulayl Industrial Park, and the Al-Tajamouat Industrial City. These zones encompass areas under the customs control of the respective Governments. The Government of Israel and the Government of Jordan further agreed that merchandise may enter these areas without payment of duty or excise taxes. Accordingly, the Al-Kerak Industrial Estate, the Ad-Dulayl Industrial Park, and the Al-Tajamouat Industrial City meet the criteria under paragraphs 9(e)(1) and (2) of the IFTA Act.

Therefore, pursuant to the authority delegated to me by the President in Proclamation 6955, I hereby designate the Al-Kerak Industrial Estate, the Ad-Dulayl Industrial Park, and the Al-Tajamouat Industrial City as qualifying industrial zones under section 9 of the IFTA Act, effective upon the date of publication of this notice, applicable to goods shipped from these qualifying industrial zones after such date.

Dated: October 8, 1999.

Charlene Barshefsky,

United States Trade Representative.

[FR Doc. 99–26880 Filed 10–14–99; 8:45 am]

BILLING CODE 3190–01–M

DEPARTMENT OF TRANSPORTATION

Federal Aviation Administration

Proposed Advisory Circular 25.491–1, Taxi, Takeoff and Landing Roll Design Loads

AGENCY: Federal Aviation Administration, DOT.

ACTION: Notice of availability of proposed Advisory Circular (AC) 25.491–1, and request for comments.

SUMMARY: This notice announces the availability of and requests comments on a proposed advisory circular (AC) which sets forth acceptable methods of compliance with 14 CFR 25.491 concerning taxi, takeoff and landing roll design loads. This notice is necessary to give all interested persons an opportunity to present their views on the proposed AC.

DATES: Comments must be received on or before December 14, 1999.

ADDRESSES: Send all comments on proposed AC to: Federal Aviation Administration, Attention: James D. Haynes, Airframe and Cabin Safety Branch, ANM–115, Transport Airplane Directorate, Aircraft Certification Service, 1601 Lind Avenue SW, Renton, WA 98055–4056. Comments may be inspected at the above address between 7:30 a.m. and 4:00 p.m. weekdays, except Federal holidays.

FOR FURTHER INFORMATION CONTACT: Jan Thor, Standards Staff, at the address above, telephone (425) 227–2127.

SUPPLEMENTARY INFORMATION:

Comments Invited

Interested persons are invited to comment on the proposed AC by submitting such written data, views, or arguments as they may desire. Commenters should identify AC 25.491–1 and submit comments, in duplicate, to the address specified above. All communications received on or before the closing date for comments will be considered by the Transport Standards Staff before issuing the final AC. The proposed AC can be found and downloaded from the Internet at *http://www.faa.gov/avr/air/airhome.htm,* at the link titled ''Draft AC's.'' A paper copy of the proposed AC may be obtained by contacting the person named above under the caption **FOR FURTHER INFORMATION**.

Discussion

This proposed AC sets forth acceptable methods of compliance with the provisions of 14 CFR § 25.491 dealing with the certification requirements for taxi, takeoff and landing roll design loads. Guidance information is provided for showing compliance with that regulation relating to structural design for airplane operation on paved runways and taxiways normally used in commercial operation. Other methods of compliance with the requirements may be acceptable.

Issued in Renton, Washington, on October 7, 1999.

Donald L. Riggin,

Acting Manager, Transport Airplane Directorate, Aircraft Certification Service, ANM–100.

[FR Doc. 99–26954 Filed 10–14–99; 8:45 am]

BILLING CODE 4910–13–M

DEPARTMENT OF TRANSPORTATION

Surface Transportation Board

[STB Docket No. AB–6 (Sub–No. 386X)]

The Burlington Northern and Santa Fe Railway Company—Abandonment Exemption—in Barnes County, ND

The Burlington Northern and Santa Fe Railway Company (BNSF) has filed a verified notice of exemption under 49 CFR 1152 subpart F—*Exempt Abandonments* to abandon its line of railroad between BNSF milepost 69.05 and BNSF milepost 61.19, near Valley City, in Barnes County, ND, a total distance of 7.86 miles (line). The line

traverses United States Postal Service Zip Code 58072.

BNSF has certified that: (1) No local traffic has moved over the line for at least 2 years; (2) any overhead traffic on the line can be rerouted over other lines; (3) no formal complaint filed by a user of rail service on the line (or by a state or local government entity acting on behalf of such user) regarding cessation of service over the line either is pending with the Surface Transportation Board (Board) or with any U.S. District Court or has been decided in favor of complainant within the 2-year period; and (4) the requirements at 49 CFR 1105.7 (environmental reports), 49 CFR 1105.8 (historic reports), 49 CFR 1105.11 (transmittal letter), 49 CFR 1105.12 (newspaper publication), and 49 CFR 1152.50(d)(1) (notice to governmental agencies) have been met.

As a condition to this exemption, any employee adversely affected by the abandonment shall be protected under *Oregon Short Line R. Co.—Abandonment—Goshen,* 360 I.C.C. 91 (1979). To address whether this condition adequately protects affected employees, a petition for partial revocation under 49 U.S.C. 10502(d) must be filed. Provided no formal expression of intent to file an offer of financial assistance (OFA) has been received, this exemption will be effective on November 14, 1999, unless stayed pending reconsideration. Petitions to stay that do not involve environmental issues,[1] formal expressions of intent to file an OFA under 49 CFR 1152.27(c)(2),[2] and trail use/rail banking requests under 49 CFR 1152.29 must be filed by October 25, 1999. Petitions to reopen or requests for public use conditions under 49 CFR 1152.28 must be filed by November 4, 1999, with the Surface Transportation Board, Office of the Secretary, Case Control Unit, 1925 K Street, NW, Washington, DC 20423–0001.

A copy of any petition filed with the Board should be sent to applicant's representative: Sarah Whitley Bailiff, Esq., The Burlington Northern and Santa Fe Railway Company, 2500 Lou Menk Drive, Fort Worth, TX 76131–2828. If the verified notice contains false or misleading information, the exemption is void *ab initio.*

BNSF has filed an environmental report which addresses the abandonment's effects, if any, on the environment and historic resources. The Section of Environmental Analysis (SEA) will issue an environmental assessment (EA) by October 20, 1999. Interested persons may obtain a copy of the EA by writing to SEA (Room 500, Surface Transportation Board, Washington, DC 20423–0001) or by calling SEA, at (202) 565–1545. Comments on environmental and historic preservation matters must be filed within 15 days after the EA becomes available to the public.

Environmental, historic preservation, public use, or trail use/rail banking conditions will be imposed, where appropriate, in a subsequent decision.

Pursuant to the provisions of 49 CFR 1152.29(e)(2), BNSF shall file a notice of consummation with the Board to signify that it has exercised the authority granted and fully abandoned the line. If consummation has not been effected by BNSF's filing of a notice of consummation by October 15, 2000, and there are no legal or regulatory barriers to consummation, the authority to abandon will automatically expire.

Board decisions and notices are available on our website at ''WWW.STB.DOT.GOV.''

By the Board, David M. Konschnik, Director, Office of Proceedings.

Decided: October 6, 1999.

Vernon A. Williams,

Secretary.

[FR Doc. 99–26834 Filed 10–14–99; 8:45 am]

BILLING CODE 4915–00–P

[1] The Board will grant a stay if an informed decision on environmental issues (whether raised by a party or by the Board's Section of Environmental Analysis in its independent investigation) cannot be made before the exemption's effective date. *See Exemption of Out-of-Service Rail Lines,* 5 I.C.C.2d 377 (1989). Any request for a stay should be filed as soon as possible so that the Board may take appropriate action before the exemption's effective date.

[2] Each offer of financial assistance must be accompanied by the filing fee, which currently is set at $1000. *See* 49 CFR 1002.2(f)(25).

DEPARTMENT OF THE TREASURY

Federal Law Enforcement Training Center; Advisory Committee to the National Center for State and Local Law Enforcement Training; Renewal of Charter

AGENCY: Federal Law Enforcement Training Center, Treasury.

ACTION: Notice.

SUMMARY: The Charter for the Advisory Committee to the National Center for State and Local Law Enforcement Training at the Federal Law Enforcement Training Center will renew for a 2-year period beginning October 31, 1999.

FOR FURTHER INFORMATION CONTACT: Hobart M. Henson, Director, National Center for State and Local Law Enforcement Training, Federal Law Enforcement Training Center, Glynco, GA 31524, 912–267–2322.

SUPPLEMENTARY INFORMATION: Pursuant to the Federal Advisory Committee Act of October 6, 1972, (Pub. L. 92–463, as amended), and with the approval of the Secretary of the Treasury and the concurrence of the Office of Management and Budget, the Federal Law Enforcement Training Center announces the renewal of the Advisory Committee to the National Center for State and Local Law Enforcement Training. The primary purpose of the Advisory Committee is to provide a forum for discussion and interchange between a broad cross-section of representatives for the law enforcement community and related training institutions on training issues and needs. Although FLETC representatives participate in the training committee activities of the major police membership associations, no forum exists which provides the broad representation required to meet the needs of the National Center. The uniqueness of the program requires an appropriately selected and specifically dedicated group. The Committee does not duplicate functions being performed within Treasury or elsewhere in the Federal Government.

Dated: October 7, 1999.

Hobart M. Henson,

Director, National Center for State and Local Law Enforcement Training.

[FR Doc. 99–26936 Filed 10–14–99; 8:45 am]

BILLING CODE 4810–32–U

U.S. TRADE DEFICIT REVIEW COMMISSION

Notice of Open Hearing of the U.S. Trade Deficit Review Commission

AGENCY: U.S. Trade Deficit Review Commission.

ACTION: Notice of opeon public hearing.

SUMMARY: Notice is hereby given of the following hearing of the U.S. Trade Deficit Review Commission:

Name: Murray Weidenbaum, Chairman of the U.S. Trade Deficit Review Commission

The Commission is mandated to report to the Congress and the President on the causes, consequences, and solutions to the U.S. trade deficit. The purpose of this public hearing is to discuss related labor and environment issues and trade in traditional manufacturing. There will be two sessions, one in the morning and one in the afternoon, for presentations by

invited witnesses on their views on the interrelationship between the trade deficit and the topics of the hearing. There will be a question and answer period between the Commissioners and the witnesses.

Public participation is invited and there will be an open-mike session for public comments at the conclusion of the afternoon session. Sign-up for the open-mike session will take place in the afternoon and will be on a first come first served basis. Each individual or group making an oral presentation will be limited to a total time of 3 minutes. Because of time constraints, parties with common interests are encouraged to designate a single speaker to represent their views.

Dates and Time: Friday, October 29, 1999, 8:00 AM–5:00 PM Eastern Time inclusive.

Location of Hearing: The hearing will be held at the Carnegie Museum of Art, Museum of Art Theater, located at 4400 Forbes Avenue, Pittsburgh, Pennsylvania 15213. Public seating is limited to about 180 seats and will be on a first come first served basis. Public parking is available and will cost $3 when parking ticket is validated by the Museum.

FOR FURTHER INFORMATION CONTACT: Any member of the public wishing further information concerning the hearing or who wishes to submit oral or written comments should contact Kathy Michels, Administrative Officer for the U.S. Trade Deficit Review Commission, 444 North Capitol Street, NW, Suite 706, Washington, DC 20001; phone 202–624–1407; fax 202–624–1406; or via e-mail at: *tdrc@sso.org.*

Providing Oral or Written Comments at the Pittsburgh Hearing

Copies of the draft meeting agenda, when available, may be obtained from the U.S. Trade Deficit Review Commission by going to the Commission's website at ustdrc.gov. The commission requests that written public statements submitted for the record be brief and concise and limited to two pages in length. Written comments (at least 35 copies) must be received in the USTDRC Headquarters Office in Washington, DC by Friday, October 15, 1999. Comments received too close to the hearing date will normally be provided to the Commission Members at its hearing. Written comments may be provided up until the time of the hearing.

Authority: The Trade Deficit Review Commission Act, Pub. L. No. 105277, Div. A, section 127, 112 Stat. 2681–547 (1998), established the Commission to study the nature, causes, and consequences of the United States merchandise trade and current accounts deficits and report its findings to the President and the Congress. By statute, the Commission must hold at least 4 regional field hearings and 1 hearing in Washington, DC. This is the first in a series of field hearings to be conducted. The schedule of hearings is available at the ustdrc.gov website.

For the U.S. Trade Deficit Review Commission.

Dated at Washington, DC October 12, 1999.

Allan I. Mendelowitz,

Executive Director, U.S. Trade Deficit Review Commission.

[FR Doc. 99–27011 Filed 10–14–99; 8:45 am]

BILLING CODE 6820–46–M

DEPARTMENT OF VETERANS AFFAIRS

VA National Research Advisory Council, Notice of Establishment

As required by section 9(a)(2) of the Federal Advisory Committee Act, 5 U.S.C. (App. 1), VA hereby gives notice of the establishment of the National Research Advisory Council (NRAC). VA has determined that establishing this Council is in the public interest.

The purview of the NRAC includes the policies and programs of the VA Research and Development Office for carrying out a Congressionally-mandated research program. NRAC will provide advice and make recommendations to the VA Chief Research and Development Officer (CRADO), the Under Secretary for Health, and the Secretary of Veterans Affairs on the nature and scope of research sponsored and/or conducted by the Veterans Health Administration (VHA) of the Department of Veterans Affairs.

The Council will consist of 12 members and a Chairperson. Selection criteria will be based on expertise in the following areas: (i) Basic biomedical research; (ii) rehabilitation research and development; (iii) health services research and development; (iv) cooperative studies research (multi-center trials in patients); (v) geriatric care; (vi) primary care; (vii) special veterans population health issues; (viii) occupational and environmental health research; (ix) mental health and behavioral research; and (x) surgery.

Close attention will be given to equitable geographic distribution and to ethnic and gender representation. In addition, NRAC will include at least one veteran as a member in order to assure that important perspective on the health problems of veterans. Because the NRAC performs an ongoing service unrestricted by time, its functions will be needed for the forseeable future.

The Designated Federal Official for the NRAC is James F. Burris, M.D., Deputy Chief Research and Development Officer, phone number: 202–273–8284.

Dated: September 24, 1999.

By direction of the Secretary of the Department of Veterans Affairs.

Marvin R. Eason,

Committee Management Officer.

[FR Doc. 99–27018 Filed 10–14–99; 8:45 am]

BILLING CODE 8320–01–M

DEPARTMENT OF VETERANS AFFAIRS

Advisory Committee on Former Prisoners of War, Notice of Meeting

The Department of Veterans Affairs (VA) gives notice under Public Law 92–463 that a meeting of the Advisory Committee on Former Prisoners of War will be held on October 25th through 27th, 1999, at the Department of Veterans Affairs, Carl T. Hayden Va Medical Center, 650 East Indian School Road, Phoenix, AZ 85012. The meeting will be held in the Ambulatory Care Clinic, Basement Level, NW Quadrant. Each day the meeting will convene at 9 a.m. and end at 4:30 p.m. The meeting is open to the public.

The purpose of the committee is to advise the Secretary of Veterans Affairs on the administration of benefits under Title 38, United States Code, for veterans who are former prisoners of war, and to make recommendations on the needs of such veterans for compensation, health care and rehabilitation.

The agenda for October 25 will begin with an introduction of committee members and dignitaries, a review of Committee reports, an update of activities since the last meeting, and a period for POW veterans and/or the public to address the committee. The Committee will also review the Secretary's response to the November 1998 report of meeting, and receive presentations on the Veterans Benefits Administration and Veterans Health Administration activities. The agenda on October 26 will include updates on the Center for POW Studies, continuing learning education seminars and final report from the medical follow-up agency (on Mortality/Morbidity Study). On October 27, the Committee's Medical and Administrative subcommittees will break out to discuss their activities and report back to the Committee.

Additionally, the Committee will review and analyze the comments

discussed throughout the meeting for the purpose of assisting and compiling a final report to be sent to the Secretary.

Members of the public may direct questions or submit prepared statements for review by the Committee in advance of the meeting, in writing only, to Mr. Robert J. Epley, Director, Compensation and Pension Service (21), Department of Veterans Affairs, 810 Vermont Avenue, NW., Washington, DC 20420. Submitted materials must be received by October 15, 1999. A report of the meeting and roster of Committee members may be obtained from Mr. Epley.

Dated: September 30, 1999.

By direction of the Secretary.

Marvin R. Eason,

Committee Management Officer.

[FR Doc. 99–27021 Filed 10–14–99; 8:45 am]

BILLING CODE 8320–01–M

DEPARTMENT OF VETERANS AFFAIRS

Advisory Committee on Minority Veterans, Notice of Meeting

The Department of Veterans Affairs (VA), in accordance with Public Law 103–446, gives notice that a meeting of the Advisory Committee on Minority Veterans will be held from Wednesday, October 27 through Friday, October 29, 1999, at the Oneida Radisson Inn Green Bay, 2040 Airport Drive, Green Bay, WI 54313.

The purpose of the Advisory Committee on Minority Veterans is to advise the Secretary of Veterans Affairs on the administration of VA benefits and services for minority veterans, to assess the needs of minority veterans and to evaluate whether VA compensation, medical and rehabilitation services, outreach, and other programs are meeting those needs. The Committee will make recommendations to the Secretary regarding such activities.

The meeting will convene in the State Room at the Oneida Radisson. On Wednesday, October 27, 1999, the Committee will focus on responses to the Committee's Fifth Annual Report and receive testimony from the Wisconsin State Director of Veterans Affairs and representatives of Community Based Organizations (CBO). On Thursday, October 28th, the Committee will concentrate on VA programs and facilities located in the Mid-west. The Committee will be briefed by three Mid-west Veterans Integrated Service Networks (VISNs) Directors; the Assistant Director, Milwaukee VA Regional Office; and a panel of Veterans Service Organization representatives. On Friday, October 29th, the Committee will examine opportunities for partnership between VA and the Health Care Finance Administration (HCFA) in an effort to determine how minority veterans can take advantage of medical care options available through Medicare and Medicaid. These sessions will be open to the public. It will be necessary for those wishing to attend the meeting to contact Mr. Anthony T. Hawkins, Department of Veterans Affairs, at (202) 273–6708, before October 22, 1999. No time will be allocated for receiving oral presentations from the public. However, the Committee will accept written comments from interested parties on issues affecting minority veterans. Such comments should be referred to the Committee at the following address: Advisory Committee on Minority Veterans, Center for Minority Veterans (OOM), U.S. Department of Veterans Affairs, 810 Vermont Avenue, NW, Washington, DC 20420.

Dated: October 6, 1999.

By direction of the Secretary.

Marvin R. Eason,

Committee Management Officer.

[FR Doc. 99–27022 Filed 10–14–99; 8:45 am]

BILLING CODE 8320–01–M

DEPARTMENT OF VETERANS AFFAIRS

Voluntary Service National Advisory Committee, Notice of Meeting

The Department of Veterans Affairs gives notice under Public Law 92–463 that the Executive Committee, Department of Veterans Affairs Voluntary Service National Advisory Committee (NAC) will meet October 28–29, 1999, at the Clarion Plaza Hotel, 9700 International Drive, Orlando, Florida. The meeting is scheduled from 8 a.m.–4:30 p.m. on October 28, 1999 and from 8 a.m.–12 noon on October 29, 1999.

The NAC consists of sixty national organizations and advises the Under Secretary for Health and other members of the Department of Veterans Affairs Central Office staff on how to coordinate and promote volunteer activities within VA facilities. The Executive Committee consists of nineteen representatives from the NAC member organizations and acts as the NAC governing body in the interim period between NAC Annual Meetings.

The agenda for the morning session of October 28, 1999, includes: updates on the Veterans Health Administration and the Voluntary Service program's progress since the 1999 NAC Annual Meeting, Parke Board update, and review of the 1999 Annual Meeting Evaluations. The agenda for the afternoon session of October 28, 1999, includes: 54th Annual Meeting plans, 2001 and 2002 NAC Annual Meeting planning, and membership report.

The agenda for the morning session of October 29, 1999, includes: review recommendations approved at the 1999 NAC Annual Meeting, subcommittee reports, Standard Operating Procedure Revisions, New Business, and a presentation from Network 14 staff on a ''Thanks Vets 2000'' proposal.

The meeting is open to the public. Individuals interested in attending are encouraged to contact: Ms. Laura Balun, Administrative Officer, Voluntary Service Office (10C2), Department of Veterans Affairs, 810 Vermont Avenue, NW, Washington, DC 20420, (202) 273–8392.

Dated: October 6, 1999.

Marvin R. Eason,

Committee Management Officer.

[FR Doc. 99–27019 Filed 10–14–99; 8:45 am]

BILLING CODE 8320–01–M

DEPARTMENT OF VETERANS AFFAIRS

Advisory Committee on Women Veterans, Notice of Meeting

The Department of Veterans Affairs gives notice under Public Law 92–463 that a meeting of the Advisory Committee on Women Veterans will be held on October 26–28, 1999, at the Department of Veterans Affairs, 810 Vermont Avenue, NW, Washington, DC.

The purpose of the Committee is to advise the Secretary of Veterans Affairs regarding the needs of women veterans with respect to health care, rehabilitation, compensation, outreach, and other programs and activities administered by the Department of Veterans Affairs designed to meet such needs. The Committee will make recommendations to the Secretary regarding such activities.

All sessions will be open to the public. Those who plan to attend should contact Ms. Maryanne Carson, Department of Veterans Affairs, Center for Women Veterans, 810 Vermont Avenue, NW, Washington, DC, at (202) 273–6193, before October 18, 1999. A tentative agenda follows:

Tuesday, October 26, Conference Room 530

8:30 a.m. Welcome and Opening Remarks, Office of the Secretary

9:00 a.m. Review March 1999 Minutes: Dr. Linda Schwartz, Chair

9:30 a.m. Review June 1999 Site Visit Report—Seattle/American Lake, WA, Dr. Linda Schwartz, Chair
10:00 a.m. Discussion: Old Business, Dr. Linda Schwartz, Chair
10:30 a.m. Break
11:00 a.m. Briefing: Committee Budget—FY 2000, Office of Financial Management, Associate Director, Center for Women Veterans
11:30 a.m. Update: Director, Center for Women Veterans, Advisory Committee 1998 Report: Response to Recommendations, 1998 Report on Women Veterans Access to VA Health Care
12:15 p.m. Lunch
1:30 p.m. Briefing: Veterans Benefits Administration, Advisory Committee 1998 Report: Response to Recommendations
2:30 p.m. Briefing: Readjustment Counseling Service, Advisory Committee 1998 Report: Response to Recommendations STC Program
3:00 p.m. Update: Veterans Health Administration, Advisory Committee 1998 Report: Response to Recommendations
3:15 p.m. Break
3:45 p.m. Update: Women Veterans Health Programs
4:15 p.m. Briefing: Persian Gulf Illness—Current Research and Treatment Initiatives
5:00 p.m. Adjourn

Wednesday, October 27, Conference Room 230

8:30 a.m. Update: Summit 2000, Discussion; Advisory Committee Participation
9:30 a.m. General Discussion: Advisory Committee 2000 Report, Dr. Linda Schwartz, Chair
10:30 a.m. Break
11:00 a.m. General Discussion: Summary Committee Activities 1998–2000
12:15 p.m. Lunch
1:30 p.m. Subcommittee Meetings, Summary of Year Activities, Development of Recommendations: 2000 Report
3:00 p.m. Break
3:30 p.m. Full Committee Reconvene—Subcommittee Reports
5:00 p.m. Adjourn

Thursday, October 28, Conference Room 430

8:30 a.m. General Discussion—2000 report, Development of Timeline and Assignments
10:00 a.m. Subcommittees Reconvene
12:00 noon Lunch
1:30 p.m. General Discussion, New Business, Next Meeting Date
3:00 p.m. Adjourn

Dated: October 6, 1999.

By direction of the Secretary.

Marvin R. Eason,

Committee Management Officer.

[FR Doc. 99–27020 Filed 10–14–99; 8:45 am]

BILLING CODE 8320–01–M

federal register

Friday
October 15, 1999

Part II

State Justice Institute

Grant Guideline; Notice

STATE JUSTICE INSTITUTE

Grant Guideline

AGENCY: State Justice Institute.

ACTION: Final grant guideline.

SUMMARY: This Guideline sets forth the administrative, programmatic, and financial requirements attendant to Fiscal Year 2000 State Justice Institute grants, cooperative agreements, and contracts.

EFFECTIVE DATE: October 15, 1999.

FOR FURTHER INFORMATION CONTACT: David I. Tevelin, Executive Director, or Kathy Schwartz, Deputy Director, State Justice Institute, 1650 King St. (Suite 600), Alexandria, VA 22314, (703) 684–6100.

SUPPLEMENTARY INFORMATION: Pursuant to the State Justice Institute Act of 1984, 42 U.S.C. 10701, *et seq.*, as amended, the Institute is authorized to award grants, cooperative agreements, and contracts to State and local courts, nonprofit organizations, and others for the purpose of improving the quality of justice in the State courts of the United States.

Status of FY 2000 Appropriations

The Senate has approved an FY 2000 appropriation of $6.85 million for the Institute. The House of Representatives has recommended no funding for SJI in FY 2000. The level of the Institute's appropriation, if any, will be determined by a Conference Committee later this fall. The grant program proposed in this Guideline and the funding targets noted for specific programs are based on funding at the level approved by the Senate. The Guideline may be modified after final Congressional action on the appropriation.

Types of Grants Available and Funding Schedules

The SJI grant program is designed to be responsive to the most important needs of the State courts. To meet the full range of the courts' diverse needs, the Institute offers five different categories of grants. The types of grants available in FY 2000 and the funding cycles for each program are provided below:

Project Grants

These grants are awarded to support innovative education, research, demonstration, and technical assistance projects that can improve the administration of justice in State courts nationwide. Except for ''Single Jurisdiction'' project grants awarded under section II.D. (see below), project grants are intended to support innovative projects of national significance. As provided in section V. of the Guideline, project grants may ordinarily not exceed $200,000 for 15 months; however, grants in excess of $150,000 are likely to be rare, and awarded only to support projects likely to have a significant national impact.

Applicants must submit a concept paper (see section VI.) and, ordinarily, an application (see section VII.) in order to obtain a project grant. As indicated in section VI.C., the Board may make an ''accelerated'' grant of less than $40,000 on the basis of the concept paper alone when the need for the project is clear and little additional information about the operation of the project would be provided in an application.

With the exception of papers following up on the National Conference on Pro Se Litigants Appearing in Court, the FY 2000 mailing deadline for project grant concept papers is November 24, 1999. Papers must be postmarked or bear other evidence of submission by that date. The Board of Directors will meet in early March 2000 to invite formal applications based on the most promising concept papers. Applications will be due on May 10, 2000, and awards will be approved by the Board in July. Papers following up on the National Conference on Pro Se Litigants Appearing in Court must be mailed by March 17, 2000. The Board of Directors will review these papers in early May 2000 and invite applications based on the most promising concept papers. Applications will be due by June 10, 2000, and awards will be approved by the Board in July. See section VII.A. for Project Grant application procedures.

Single Jurisdiction Project Grants

Section II.D. reserves up to $300,000 for Projects Addressing a Critical Need of a Single State or Local Jurisdiction. To receive a grant under this program, an applicant must demonstrate that (1) The proposed project is essential to meeting a critical need of the jurisdiction and (2) the need cannot be met solely with State and local resources within the foreseeable future. Applicants are encouraged to submit proposals to replicate approaches or programs that have been evaluated as effective under an SJI grant. Examples of projects that could be replicated are listed in Appendix F. See section VII.A for Single Jurisdiction Grant application procedures.

Technical Assistance Grants

Section II.E. reserves up to $400,000 for Technical Assistance Grants. Under this program, a State or local court may receive a grant of up to $30,000 to engage outside experts to provide technical assistance to diagnose, develop, and respond to a jurisdiction's problems.

Letters of application for a Technical Assistance grant may be submitted at any time. Applicants submitting letters October 1, 1999 and January 14, 2000 will be notified by March 31, 2000; those submitting letters between January 15, 2000 and March 10, 2000 will be notified by May 26, 2000; those submitting letters between March 11, 2000 and June 10, 2000 will be notified by August 25, 2000; and those submitting letters between June 11 and September 29, 2000 will be notified of the Board's decision by December 15, 2000. See section VII.D. for Technical Assistance Grant application procedures.

Curriculum Adaptation Grants

A grant of up to $20,000 may be awarded to a State or local court to replicate or modify a model training program developed with SJI funds. The Guideline allocates up to $160,000 for these grants in FY 2000.

Letters requesting Curriculum Adaptation grants may be submitted at any time during the fiscal year. However, in order to permit the Institute sufficient time to evaluate these proposals, letters must be submitted no later than 90 days before the projected date of the training program. See section VII.E. for Curriculum Adaptation Grant application procedures.

Scholarships

The Guideline allocates up to $200,000 of FY 2000 funds for scholarships to enable judges and court managers to attend out-of-State education and training programs.

Scholarships for eligible applicants are approved largely on a ''first come, first served'' basis, although the Institute may approve or disapprove scholarship requests in order to achieve appropriate balances on the basis of geography, program provider, and type of court or applicant (*e.g.*, trial judge, appellate judge, court administrator). Scholarships will be approved only for programs that either (1) address topics included in the Guideline's Special Interest categories (section II.B.); (2) enhance the skills of judges and court managers; or (3) are part of a graduate program for judges or court personnel.

Applicants interested in obtaining a scholarship for a program beginning between January 1 and March 31, 2000 must submit their applications and any required accompanying documents

between October 1 and December 1, 1999. For programs beginning between April 1 and June 30, 2000, the applications and documents must be submitted between January 7 and March 7, 2000. For programs beginning between July 1 and September 30, 2000, the applications and documents must be submitted between April 3 and June 1, 2000. For programs beginning between October 1 and December 31, 2000, the applications and documents must be submitted between July 5 and September 1, 2000. For programs beginning between January 1 and March 31, 2001, the applications and documents must be submitted between October 2 and December 1, 2000. See section VII.F for Scholarship application procedures.

Continuation and On-Going Support Grants

Continuation grants (see sections III.E., V.C. and D., and VII.B) are intended to enhance the specific program or service begun during the initial grant period. On-going support grants (see sections III.O., V.C. and D., and VII.C.) may be awarded for up to a three-year period to support national-scope projects that provide the State courts with critically needed services, programs, or products.

The Guideline establishes a combined target for continuation and on-going support of approximately 25% of the total amount projected to be available for all grants in FY 2000. Grantees should accordingly be aware that the award of a grant to support a project does not constitute a commitment to provide either continuation funding or on-going support.

An applicant for a continuation or on-going support grant must submit a letter notifying the Institute of its intent to seek such funding, no later than 120 days before the end of the current grant period. The Institute will then notify the applicant of the deadline for its application. See sections VII.B. and C. for continuation and on-going support grant application procedures.

Special Interest Categories

The Guideline includes nine Special Interest categories, *i.e.*, those project areas that the Board has identified as being of particular importance to the State courts this year. The selection of these categories was based on the Board and staff's experience and observations over the past year; the recommendations received from judges, court managers, lawyers, members of the public, and other groups interested in the administration of justice; and the issues identified in recent years' concept papers and applications.

Section II.B. of the Guideline includes the following Special Interest categories:

Improving Public Confidence in the Courts;

Education and Training for Judges and Other Key Court Personnel;

Dispute Resolution and the Courts;

Application of Technology;

Court Management, Financing, and Planning;

Substance Abuse and the Courts;

Children and Families in Court;

Improving the Courts' Response to Domestic Violence; and

The Relationship Between State and Federal Courts.

Conferences

The Institute is soliciting proposals to conduct a National Conference on Improving the Adversary System. See section II.B.2.b.(4).

Recommendations to Grantwriters

Recommendations to Grantwriters may be found in Appendix A.

Only grammatical and technical changes were made in the Proposed Guideline. The following Grant Guideline is adopted by the State Justice Institute for FY 2000:

State Justice Institute Grant Guideline

Table of Contents

I. The Mission of the State Justice Institute
II. Scope of the Program
III. Definitions
IV. Eligibility for Award
V. Types of Projects and Grants; Size of Awards
VI. Concept Papers
VII. Applications
VIII. Application Review Procedures
IX. Compliance Requirements
X. Financial Requirements
XI. Grant Adjustments
Appendix A Recommendations to Grant Writers
Appendix B Questions Frequently Asked by Grantees
Appendix C List of State Contacts Regarding Administration of Institute Grants to State and Local Courts
Appendix D SJI Libraries: Designated Sites and Contacts
Appendix E Illustrative List of Model Curricula
Appendix F Illustrative List of Replicable Projects
Appendix G State Justice Institute Scholarship Application Forms (Forms S1 and S2)
Appendix H Line-Item Budget Form (Form E)
Appendix I Certificate of State Approval Form (Form B)

I. The Mission of the State Justice Institute

The Institute was established by Pub. L. 98–620 to improve the administration of justice in the State courts of the United States.

Incorporated in the State of Virginia as a private, nonprofit corporation, the Institute is charged, by statute, with the responsibility to:

A. Direct a national program of financial assistance designed to assure that each citizen of the United States is provided ready access to a fair and effective system of justice;

B. Foster coordination and cooperation with the Federal judiciary;

C. Promote recognition of the importance of the separation of powers doctrine to an independent judiciary; and

D. Encourage education for judges and support personnel of State court systems through national and State organizations, including universities.

To accomplish these broad objectives, the Institute is authorized to provide funds to State courts, national organizations which support and are supported by State courts, national judicial education organizations, and other organizations that can assist in improving the quality of justice in the State courts.

The Institute is supervised by an 11-member Board of Directors appointed by the President, by and with the consent of the Senate. The Board is statutorily composed of six judges, a State court administrator, and four members of the public, no more than two of whom can be of the same political party.

Through the award of grants, contracts, and cooperative agreements, the Institute is authorized to perform the following activities:

A. Support research, demonstrations, special projects, technical assistance, and training to improve the administration of justice in the State courts;

B. Provide for the preparation, publication, and dissemination of information regarding State judicial systems;

C. Participate in joint projects with Federal agencies and other private grantors;

D. Evaluate or provide for the evaluation of programs and projects funded by the Institute to determine their impact upon the quality of criminal, civil, and juvenile justice and the extent to which they have contributed to improving the quality of justice in the State courts;

E. Encourage and assist in furthering judicial education;

F. Encourage, assist, and serve in a consulting capacity to State and local justice system agencies in the development, maintenance, and coordination of criminal, civil, and

juvenile justice programs and services; and

G. Be responsible for the certification of national programs that are intended to aid and improve State judicial systems.

II. Scope of the Program

During FY 2000, the Institute will consider applications for funding support that address any of the areas specified in its enabling legislation. The Board, however, has designated nine program categories as being of special interest. See section II.B.

A. Authorized Program Areas

The Institute is authorized to fund projects addressing one or more of the following program areas listed in the State Justice Institute Act, the Battered Women's Testimony Act, the Judicial Training and Research for Child Custody Litigation Act, and the International Parental Kidnapping Crime Act:

1. Assistance to State and local court systems in establishing appropriate procedures for the selection and removal of judges and other court personnel and in determining appropriate levels of compensation;
2. Education and training programs for judges and other court personnel for the performance of their general duties and for specialized functions, and national and regional conferences and seminars for the dissemination of information on new developments and innovative techniques;
3. Research on alternative means for using judicial and nonjudicial personnel in court decisionmaking activities, implementation of demonstration programs to test such innovative approaches, and evaluations of their effectiveness;
4. Studies of the appropriateness and efficacy of court organizations and financing structures in particular States, and support to States to implement plans for improved court organization and financing;
5. Support for State court planning and budgeting staffs and the provision of technical assistance in resource allocation and service forecasting techniques;
6. Studies of the adequacy of court management systems in State and local courts, and implementation and evaluation of innovative responses to records management, data processing, court personnel management, reporting and transcription of court proceedings, and juror utilization and management;
7. Collection and compilation of statistical data and other information on the work of the courts and on the work of other agencies which relates to and affects the work of courts;
8. Studies of the causes of trial and appellate court delay in resolving cases, and establishing and evaluating experimental programs for reducing case processing time;
9. Development and testing of methods for measuring the performance of judges and courts, and experiments in the use of such measures to improve the functioning of judges and the courts;
10. Studies of court rules and procedures, discovery devices, and evidentiary standards to identify problems with the operation of such rules, procedures, devices, and standards, and the development of alternative approaches to better reconcile the requirements of due process with the need for swift and certain justice, and testing of the utility of those alternative approaches;
11. Studies of the outcomes of cases in selected areas to identify instances in which the substance of justice meted out by the courts diverges from public expectations of fairness, consistency, or equity, and the development, testing, and evaluation of alternative approaches to resolving cases in such problem areas;
12. Support for programs to increase court responsiveness to the needs of citizens through citizen education, improvement of court treatment of witnesses, victims, and jurors, and development of procedures for obtaining and using measures of public satisfaction with court processes to improve court performance;
13. Testing and evaluating experimental approaches to provide increased citizen access to justice, including processes which reduce the cost of litigating common grievances, and alternative techniques and mechanisms for resolving disputes between citizens;
14. Collection and analysis of information regarding the admissibility and quality of expert testimony on the experiences of battered women offered as part of the defense in criminal cases under State law, as well as sources of and methods to obtain funds to pay costs incurred to provide such testimony, particularly in cases involving indigent women defendants;
15. Development of training materials to assist battered women, operators of domestic violence shelters, battered women's advocates, and attorneys to use expert testimony on the experiences of battered women in appropriate cases, and individuals with expertise in the experiences of battered women to develop skills appropriate to providing such testimony;
16. Research regarding State judicial decisions relating to child custody litigation involving domestic violence;
17. Development of training curricula to assist State courts to develop an understanding of, and appropriate responses to child custody litigation involving domestic violence;
18. Dissemination of information and training materials and provision of technical assistance regarding the issues listed in paragraphs 14–17 above;
19. Development of national, regional, and in-State training and educational programs dealing with criminal and civil aspects of interstate and international parental child abduction; and
20. Other programs, consistent with the purposes of the State Justice Institute Act, as may be deemed appropriate by the Institute, including projects dealing with the relationship between Federal and State court systems such as where there is concurrent State-Federal jurisdiction and where Federal courts, directly or indirectly, review State court proceedings.

Funds will not be made available for the ordinary, routine operation of court systems or programs in any of these areas.

B. Special Interest Program Categories

1. General Description

The Institute is interested in funding both innovative programs and programs of proven merit that can be replicated in other jurisdictions. The Institute is especially interested in funding projects that:

a. Formulate new procedures and techniques, or creatively enhance existing arrangements to improve the courts;

b. Address aspects of the State judicial systems that are in special need of serious attention;

c. Have national significance by developing products, services, and techniques that may be used in other States; and

d. Create and disseminate products that effectively transfer the information and ideas developed to relevant audiences in State and local judicial systems, or provide technical assistance to facilitate the adaptation of effective programs and procedures in other State and local jurisdictions.

A project will be identified as a Special Interest project if it meets the four criteria set forth above and (1) it falls within the scope of the Special Interest program areas designated below, or (2) information coming to the attention of the Institute from the State courts, their affiliated organizations, the

research literature, or other sources demonstrates that the project responds to another special need or interest of the State courts.

Concept papers and applications which address a Special Interest category will be accorded a preference in the rating process. (See the selection criteria listed in sections VI.C.2. and VIII.)

2. Specific Categories

The Board has designated the areas set forth below as Special Interest program categories. The order of listing does not imply any ordering of priorities among the categories. For a complete list of projects supported in previous years in each of these categories, visit the Institute's Internet homepage at http://www.statejustice.org and click on Awarded Grants List.

a. *Improving Public Confidence in the Courts.* This category includes demonstration, evaluation, research, and education projects designed to improve the responsiveness of courts to public concerns regarding the fairness, equity, accessibility, timeliness, and comprehensibility of the court process, and test innovative methods for increasing the public's trust and confidence in the State courts.

(1) The Institute is particularly interested in supporting innovative projects that:

- Develop national strategies to promote the progress of State court task forces and other court-sponsored programs to eliminate race and ethnic bias in the courts, including national projects that would support planning and program development at the State and local level; develop products that highlight effective model programs and best practices; and educate judges and court personnel about relevant products developed in different States (e.g., model judicial education curricula, bench books, court conduct handbooks, codes of ethics, and legislation);
- Address court-community problems resulting from the influx of legal and illegal immigrants, including projects to inform judges about the effects of recent Federal and State legislation regarding immigrants; design and assess procedures for use in custody, visitation, and other domestic relations cases when key family members or property are outside the United States; and develop protocols to facilitate service of process, the enforcement of orders of judgment, and the disposition of criminal and juvenile cases when a non-U.S. citizen or corporation is involved;
- Demonstrate and evaluate approaches to implement the concept of restorative justice, including methods for involving the community in the sentencing process;
- Identify and test the elements of successful long-term volunteer or other court-community collaborative programs;
- Educate and clearly communicate information to litigants and the public about judicial decisions, the trial and appellate court process, and court operations, and the standards courts maintain with respect to timeliness, access, and the elimination of bias; and
- Assure that judges and court employees meet the highest ethical standards and that judicial disciplinary procedures are known, fair, and effective.

(2) The Institute is interested in supporting projects that facilitate implementation of State and local plans developed at or as a result of the National Conference on Public Trust and Confidence in the Justice System held in Washington, DC, on May 13–14, 1999. In particular, the Institute seeks to support projects that would:

- Compile and disseminate information about practices being used by courts around the country that show the promise of enhancing public trust and confidence in the justice system;
- Educate the public about the business of the courts and their role in the community;
- Examine the role of lawyers and their impact on public trust in the courts; and
- Test and evaluate technological approaches designed to enhance public access to the courts.

(3) The Institute also is interested in supporting State and local court projects to implement the action plans developed by the teams participating in the Institute-supported National Conference on Self-Represented Litigants Appearing in Court to be held in Scottsdale, Arizona, on November 18–21, 1999. Concept papers proposing such projects must be mailed by March 17, 2000, for consideration by the Institute's Board of Directors in May 2000. Applications based on these concept papers will be considered by the Board in July 2000. Applicants are advised that Institute funds may not be used to directly or indirectly support legal representation of individuals in specific cases.

b. Education and Training for Judges and Other Key Court Personnel. The Institute is interested in supporting an array of projects that will continue to strengthen and broaden the availability of court education programs at the State, regional, and national levels. This category is divided into four subsections: (1) Innovative Educational Programs; (2) Curriculum Adaptation Projects; (3) Scholarships; and (4) National Conferences.

(1) Innovative Educational Programs. This category includes support for the development and pilot-testing of innovative, high-quality educational programs for trial and appellate judges or court personnel that address key substantive and administrative issues of concern to the nation's courts, or help local courts or State court systems develop or enhance their capacity to deliver quality continuing education. Programs may be designed for presentation at the local, State, regional, or national level. Ordinarily, court education programs should be based on some form of assessment of the needs of the target audience; include clearly stated learning objectives that delineate the new knowledge or skills that participants will acquire (as opposed to a description of what will be taught); incorporate adult education principles and multiple teaching/learning methods; and result in the development of a disseminable curriculum as defined in section III.F.

(a) The Institute is particularly interested in the development of education programs that:

- Include innovative self-directed learning packages for use by appellate, trial, juvenile and family court judges and personnel, and distance-learning approaches for these audiences to assist those who do not have ready access to classroom-centered programs. These packages and approaches should include the appropriate use of various media and technologies such as Internet-based programming, interactive CD-ROM or computer disk-based programs, videos, or other audio and visual media, supported by written materials or manuals. They also should include a meaningful program evaluation and a self-evaluation process that assesses pre- and post-program knowledge and skills;
- Familiarize faculty with the effective use of instructional technology including methods for effectively presenting information through distance learning approaches including the Internet, videos, and satellite teleconferences;
- Assist local courts, State court systems, and court systems in a geographic region to develop or enhance a comprehensive program of continuing education, training, and career development for judges and court personnel as an integral part of court operations;
- Test the effectiveness of including a variety of experiential instructional

approaches in judicial branch education programs such as field studies and interchanges with community programs, organizations, and institutions;

• Encourage intergovernmental team-building, collaboration, and planning among the judicial, executive, and legislative branches of government, or courts within a metropolitan area or multi-State region;

• Develop and test innovative short (one-half or one full day) educational programs on events or issues of critical importance to local courts or courts in a particular region; and

• Develop and test methods to determine the cost-effectiveness of judicial branch education and training.

(b) The Institute is also very interested in supporting projects that would implement action plans and strategies developed by the State teams at the National Symposium on the Future of Judicial Branch Education in St. Louis, Missouri, on October 7–9, 1999, as well as proposals from other applicants designed to assist in implementing and disseminating the findings and strategies discussed at the Conference.

(c) The Institute also is interested in supporting the development and testing of curricula on issues of critical importance to the courts, including those listed in the other Special Interest categories described in this Chapter, and the following:

• Materials and curricula for appellate, trial, and juvenile and family court judges addressing adolescent and youth development, including the role and impact of youth culture (cults and gangs), and the impact that exposure to violence at home, in school, and in the community has on children;

• The specific knowledge and skills needed to manage drug court programs for adults, juveniles, or families;

• Federal and State environmental laws and the effect those laws have on trial and appellate court processes in the impacted jurisdictions; and

• Training to enhance the ability of court personnel to protect their safety and that of jurors, litigants, witnesses, and other members of the public in court facilities, and in managing cases involving individuals or organizations unwilling to cooperate with legal or administrative procedures.

(2) Curriculum Adaptation Projects. The Board is reserving up to $160,000 to support projects that adapt a model curriculum previously developed with SJI funds in order to determine its appropriateness, quality, and effectiveness for inclusion in the jurisdiction's judicial branch education program. An illustrative list of the curricula that may be appropriate for adaptation is contained in Appendix E.

The goal of the Curriculum Adaptation program is to provide State and local courts with sufficient support to modify a model curriculum, course module, or national or regional conference program developed with SJI funds to meet a particular State's or local jurisdiction's educational needs; evaluate it to determine its appropriateness, quality, and effectiveness; and train instructors to present portions or all of the curriculum. It is anticipated that the adapted curriculum will become part of the grantee's ongoing educational offerings.

Only State or local courts may apply for Curriculum Adaptation funding. Application procedures may be found in Section VII.E.

(3) Scholarships for Judges and Court Personnel. The Institute is reserving up to $200,000 to support a scholarship program for State court trial and appellate court managers. The purposes of the Institute scholarship program are to:

• Enhance the skills, knowledge, and abilities of judges and court managers;

• Enable State court judges and court managers to attend out-of-State educational programs sponsored by national and State providers that they could not otherwise attend because of limited State, local and personal budgets; and

• Provide States, judicial educators, and the Institute with evaluative information on a range of judicial and court-related education programs.

Scholarships will be granted to individuals only for the purpose of attending an out-of-State educational program within the United States. Application procedures may be found in Section VII.F.

(4) National Conferences. This category includes support for national conferences on topics of major concern to State court trial and appellate judges and personnel across the nation. Applicants are encouraged to consider the use of videoconferences, the Internet, and other technologies to increase participation and limit travel expenses in planning and presenting conferences. In planning a conference, applicants should provide for a written, video, CD-ROM, or other product that would widely disseminate information, findings, and any recommendations resulting from the conference.

This year, the Institute is particularly interested in supporting a National Conference on Improvement of the Adversary System that would explore the fundamental assumptions underlying the adversary system, its strengths and weaknesses, and what steps can be taken to improve both the system and the public's perception of the system.

The many topics that such a conference could address include:

• The types of cases for which the adversary process may be the most appropriate and the least appropriate;

• Improving access to justice for poor and middle-income litigants;

• Methods for reducing trial length and expediting the trial process;

• The best ways of presenting, adjudicating, or otherwise resolving complex litigation;

• The education of trial counsel and litigants about settlement techniques and methods for determining the value of their cases;

• The use of special or blue-ribbon juries; and

• The use of technology to facilitate the resolution of disputes.

The conference should involve the participation of judges, attorneys, court managers, legal scholars, researchers, business leaders, citizen organizations, dispute resolution specialists, and media representatives.

c. Dispute Resolution and the Courts. This category includes research, evaluation, and demonstration projects to evaluate or enhance the effectiveness of court-connected dispute resolution programs. The Institute is interested in projects that facilitate comparison among research studies by using similar measures and definitions; address the nature and operation of ADR programs within the context of the court system as a whole; and compare dispute resolution processes to attorney settlement as well as trial. Specific topics of interest include:

• Examining the timing for referrals to dispute resolution services, and the effect of different referral methods, on case outcomes and time to disposition;

• Comparing the appropriateness and effectiveness of facilitative and evaluative mediation in various types of cases;

• Evaluating the effectiveness of the use of family group conferencing procedures in dependency, delinquency, and status offense cases;

• Evaluating innovative court-connected dispute resolution programs for resolving specific types of cases, such as minor criminal cases, probate proceedings, land-use disputes, and complex and multi-party litigation;

• Testing of procedures that courts can use to assure the quality of court-connected dispute resolution programs, including methods of establishing and maintaining competency standards,

training standards, and other techniques for assuring program excellence;

• Testing innovative approaches involving community partnerships, particularly in the contexts of juvenile and restorative justice, and examining the benefits such partnerships offer in ensuring the quality of dispute resolution programs;

• Evaluating innovative applications of technology to facilitate dispute resolution processes; and

• Developing methods to eliminate race, ethnic, or gender bias in court connected dispute resolution programs, testing approaches for assuring that such programs are open to all members of the community served by the court, and assessing whether having a mediator pool that reflects the diversity of the community it serves has an impact on the use of mediation by minorities and its effectiveness.

Applicants should be aware that the Institute will not provide operational support for on-going ADR programs or start-up costs of non-innovative ADR programs. Courts also should be advised that it is preferable for an applicant to use its own funds to support the operational costs of an innovative program and request Institute funds to support related technical assistance, training, and evaluation elements of the program.

d. Application of Technology. This category includes the testing of innovative applications of technology to improve the operation of court management systems and judicial practices at both the trial and appellate court levels.

The Institute seeks to support local experiments with promising but untested applications of technology in the courts that include an evaluation of the impact of the technology in terms of costs, benefits, and staff workload, and a training component to assure that staff is appropriately educated about the purpose and use of the new technology. In this context, ''untested'' includes novel applications of technology developed for the private sector that have not previously been applied to the courts.

The Institute is particularly interested in supporting efforts to:

• Test and evaluate technologies that, if successfully implemented, would significantly re-engineer the way that courts currently do business;

• Test and evaluate technological innovations in the jury room to enhance jurors' deliberations;

• Develop and test standards governing electronic access to court records by the public;

• Evaluate approaches for electronically filing pleadings, briefs, and other documents; approaches to integrate electronic filing and electronic document management; and the impact of electronic court record systems on case management and court procedures;

• Develop model rules or standards to govern the use of electronic filing and electronic court records;

• Test innovative applications of voice recognition technology in the adjudication process;

• Demonstrate and evaluate the use of technology to assist judicial decisionmaking;

• Evaluate the use of digital audio and video technology in making a record of court proceedings;

• Demonstrate and evaluate the use of videoconferencing technology to present testimony by witnesses in remote locations, and appellate arguments (but see the limitations specified below);

• Assess the impact of the use of multimedia CD–ROM-based briefs on the courts, parties, counsel, and the trial or appellate process; and

• Evaluate innovative applications of technology designed to prevent courthouse incidents that endanger the lives and property of judges, court personnel, and courtroom participants.

Ordinarily, the Institute will not provide support for the purchase of equipment or software to implement a technology that is commonly used by courts, such as videoconferencing between courts and jails, optical imaging for recordkeeping, and automated management information systems. (See also section X.I.2.b. regarding other limits on the use of grant funds to purchase equipment and software.)

e. Court Planning, Management, Financing. The Institute is interested in supporting projects that explore emerging issues that will affect the State courts as they enter the 21st Century, as well as projects that develop and test innovative approaches for managing the courts; securing, managing, and demonstrating the effective use of the resources required to fully meet the responsibilities of the judicial branch; and institutionalizing long-range planning processes.

(1) In particular, the Institute is interested in demonstration, evaluation, education, research, and technical assistance projects to:

• Facilitate communication, information-sharing, and coordination between the juvenile and criminal courts;

• Assess the effects of innovative management approaches designed to assure quality services to court users;

• Strengthen the judge's and court manager's skills in leadership, planning, and building community confidence in the courts;

• Enhance the core competencies required of court managers and staff;

• Facilitate and implement change and encourage excellence in court operations;

• Demonstrate and assess the effective use of staff teams in court operations; and

• Prevent harassment, threats, and incidents endangering the lives and property of judges, court employees, jurors, litigants, witnesses, and other members of the public in court facilities.

(2) In addition, the Institute is interested in a research and evaluation project that would analyze and assess the impact of the ''future and the courts'' activities that have been conducted over the past decade; identify the reasons why some States have been more successful than others in implementing change; assess what steps can be taken or methods developed to facilitate the recommended changes that are still appropriate; more fully institutionalize long-range planning by State court systems and, where appropriate, local courts; and assist each State court system or local court in developing the capacity to identify future trends that may significantly affect its ability to deliver justice.

f. Substance abuse. This category includes education, technical assistance, research, and evaluation projects to assist courts in handling a large volume of substance abuse-related criminal, civil, juvenile, and domestic relations cases fairly and expeditiously. (It does not include providing support for planning, establishing, operating, or enhancing a local drug court. Applicants interested in obtaining grants to plan, implement, operate, or enhance a drug court program should contact the Drug Court Program Office, Office of Justice Programs, U.S. Department of Justice.)

The Institute is particularly interested in projects to:

• Evaluate the effectiveness of ''family drug court'' programs (i.e., specialized calendars that provide intensely supervised, court-enforced substance abuse treatment and other services to families involved in child neglect, child abuse, domestic violence, or other family cases);

• Evaluate the effectiveness of re-entry drug courts on the management of drug offenders' behavior following their release from incarceration and the impact of this additional responsibility on court operation and caseload management;

• Develop and test effective approaches for identifying and treating substance abuse by judges, lawyers, and court staff, and determining and lessening the impact of such substance abuse on the courts;

• Document public sector and private sector managed care programs that effectively provide court-ordered treatment and other services to adults and juveniles; and

Develop and test State, regional, and local educational programs for judges and court staff on the implications of managed care for the provision of drug and alcohol treatment, mental health treatment, and other services to adult and juvenile offenders, neglected and abused children and their families, and persons subject to civil commitment.

g. Children and Families in Court. This category includes education, demonstration, evaluation, technical assistance, and research projects to identify and inform judges of innovative, effective approaches for handling cases involving children and families. The Institute is particularly interested in projects to:

• Develop and test innovative protocol, procedures, educational programs, and other measures to determine and address the service needs of children exposed to family violence and the methods for mitigating those effects when issuing protection, custody, visitation, or other orders;

• Assess the impact of procedures to determine whether improper investigatory techniques may have suggested children's testimony (e.g., ''taint hearings'') on the speed and fairness of child sexual abuse trials;

• Develop and test guidelines, curricula, and other materials to assist judges in establishing and enforcing custody and support orders in cases in which a child's parents were never married to each other;

• Develop guidelines and materials to assist judges and other court officers and personnel in critically analyzing psychological evaluations of children and the credibility of clinical experts, their reports, and methods of evaluating children;

• Compile and distribute information about innovative and successful approaches to sentencing and treatment alternatives for serious youthful offenders;

• Develop and test procedures and programs that include victims of offenses committed by juveniles in the juvenile court process (other than victim-offender mediation programs);

• Create and test educational programs, guidelines, and monitoring systems to assure that the juvenile justice system meets the needs of girls and children of color;

• Develop and test innovative techniques for improving communication, sharing information, and coordinating juvenile and criminal courts and divisions;

• Design or evaluate information systems that not only provide aggregate data, but also are able to track individual cases, individual juveniles, and specific families, so that judges and court managers can manage their caseloads effectively, track placement and service delivery, and coordinate orders in different proceedings involving members of the same family; and

• Develop and test educational programs to assure that everyone coming into contact with courts serving children and families is treated with dignity, respect, and courtesy.

h. Improving the Courts' Response to Domestic Violence. This category includes innovative education, demonstration, technical assistance, evaluation, and research projects to improve the fair and effective processing, consideration, and disposition of cases concerning domestic violence and gender-related violent crimes, including projects to:

• Train custody evaluators, guardians ad litem, and other independent professionals appearing in custody and visitation cases about domestic violence and the impact witnessing such violence has on children;

• Coordinate juvenile, family, and criminal court management of domestic violence cases;

• Evaluate the effectiveness of domestic violence courts (i.e., specialized calendars or divisions for considering domestic violence cases and related matters), including their impact on victims, offenders, and court operations;

• Assess the effectiveness of including jurisdiction over family violence in a unified family court;

• Demonstrate effective ways to coordinate the response to domestic violence and gender-related crimes of violence among courts, criminal justice agencies, and social services programs, and to assure that courts are fully accessible to victims of domestic violence and other gender-related violent crimes;

• Develop and test methods for facilitating recognition and enforcement of protection orders issued by a State, Federal, or tribal court in another jurisdiction;

• Determine the effective use of information contained in protection order files stored in court electronic databases, consistent with the protection of the privacy and safety of victims of violence;

• Test the effectiveness of innovative sentencing and treatment approaches in cases involving domestic violence and other gender-related crimes including sentences that incorporate restorative justice measures; and

• Implement and train judges and court personnel on recommended protocols and procedures identified at the National Summit on Fatality Reviews held on October 25–27, 1998, in Key West, Florida. Recommendations from the Summit and an educational module are available from the in-state SJI libraries (see Appendix D) or from the National Council of Juvenile and Family Court Judges' Family Violence Department (1–800–527–3223).

Institute funds may not be used to provide operational support to programs offering direct services or compensation to victims of crimes. (Applicants interested in obtaining such operational support should contact the Office for Victims of Crime (OVC), Office of Justice Programs, U.S. Department of Justice, or the agency in their State that awards OVC funds to State and local victim assistance and compensation programs.)

i. The Relationship Between State and Federal Courts. This category includes education, research, demonstration, and evaluation projects designed to facilitate appropriate and effective communication, cooperation, and coordination between State and Federal courts. The Institute is particularly interested in innovative projects that:

(1) Develop and test curricula and disseminate information regarding effective methods being used at the trial court, State, and circuit levels to coordinate cases and administrative activities, and share facilities; and

(2) Develop and test new approaches to:

(a) Implement the habeas corpus provisions of the Anti-Terrorism Act of 1996;

(b) Handle capital habeas corpus cases fairly and efficiently;

(c) Coordinate and process mass tort cases fairly and efficiently at the trial and appellate levels;

(d) Coordinate cases in which there is concurrent jurisdiction including State and Federal cases brought under the Violence Against Women Act;

(e) Develop a guidebook for judges to assist in determining whether punitive damages should be awarded, calculating the amount in which they should be awarded, and instructing jurors regarding these issues;

(f) Exchange information and coordinate calendars among State and Federal courts; and

(g) Share facilities, jury pools, alternative dispute resolution programs, information regarding persons on pretrial release or probation, and court services.

C. ''Think Pieces''

This category addresses the development of essays of publishable quality directed to the court community. The essays should explore emerging issues that could result in significant changes in court process or judicial administration and their implications for judges, court managers, policy-makers, and the public. Grants supporting such projects are limited to no more than $10,000. Applicants should follow the procedures for concept papers requesting an accelerated award of a grant of less than $40,000, which are explained in Section VI.A.3.(b) of this Guideline.

Possible topics include, but are not limited to:

- The implications of changing expectations about the proper role of judges—from adjudicators to problem-solvers—on court procedures, court operations, and judicial selection;
- A re-examination of judicial ethics as they relate to the evolving role of the judge as ''off-the-bench'' problem-solver, e.g., participating in domestic violence or other local coordinating councils, working with State legislatures, and collaborating with community groups;
- The potential use of local court advisory councils rooted in the community as a method of promoting public trust and confidence in the court;
- The implications of increasing commerce via the Internet for the State courts, including unique problems that may arise and the new rules and procedures that may be needed to address them;
- An exploration of issues related to privacy, data security, and public access to court records in our increasingly technological society; and
- The potential for the creation of ''cyber-courts'' through the use of the Internet—a ''courthouse-less court'' instead of a paperless court—and how the courts would have to be re-engineered to accommodate such a development.

D. Single Jurisdiction Projects

The Board will set aside up to $300,000 to support projects proposed by State or local courts that address the needs of only the applicant State or local jurisdiction. A project under this section may address any of the topics included in the Special Interest Categories or Statutory Program Areas, but it need not be innovative. The Board is particularly interested in supporting projects to replicate programs, procedures, or strategies that have been developed, demonstrated, or evaluated through an SJI grant. (A list of examples of such grants is contained in Appendix F.) An evaluation component is not required if a grant is awarded to replicate another successful SJI project; however, grants to support replications are subject to the same limits on amount and duration as other project grants. (See section V.) Ordinarily, the Institute will not provide support solely for the purchase of equipment or software.

Concept papers for single jurisdiction projects may be submitted by a State court system, an appellate court, or a limited or general jurisdiction trial court. All awards under this category are subject to the matching requirements set forth in section IX.A.7.a.

The application procedures for Single Jurisdiction Grants are the same as those for Project Grants (see Section VII.A.); however, in addition to the information presented in the program narrative, Single Jurisdiction grant applicants must also demonstrate that:

1. The proposed project is essential to meeting a critical need of the jurisdiction; and

2. The need cannot be met solely with State and local resources within the foreseeable future.

E. Technical Assistance Grants

The Board will set aside up to $400,000 to support the provision of technical assistance to State and local courts. The program is designed to provide State and local courts with sufficient support to obtain technical assistance to diagnose a problem, develop a response to that problem, and implement any needed changes. The Institute will reserve sufficient funds each quarter to assure the availability of technical assistance grants throughout the year.

Technical Assistance grants are limited to no more than $30,000 each, and may cover the cost of obtaining the services of expert consultants; travel by a team of officials from one court to examine a practice, program, or facility in another jurisdiction that the applicant court is interested in replicating; or both. Technical assistance grant funds ordinarily may not be used to support production of a videotape. Normally, the technical assistance must be completed within 12 months after the start-date of the grant.

Only a State or local court may apply for a Technical Assistance grant. The application procedures may be found in section VII.D.

III. Definitions

The following definitions apply for the purposes of this Guideline:

A. Accelerated Award

A grant of up to $40,000 awarded on the basis of a concept paper (including a budget and budget narrative) when the need for and benefits of the proposed project are clear and an application would not be needed to provide additional information about the project's methodology and budget. See section VI.C.1. for more information about accelerated awards.

B. Acknowledgment of SJI Support

The prominent display of the SJI logo on the front cover of a written product or in the opening frames of a videotape developed with Institute support, and inclusion of a brief statement on the inside front cover or title page of the document or the opening frames of the videotape identifying the grant number. See section IX.A.10.a.(2) for precise wording of the statement.

C. Application

A formal request for an Institute grant that is invited by the Board of Directors after approval of a concept paper. A complete application consists of: Form A—Application; Form B—Certificate of State Approval (for applications from local trial or appellate courts or agencies); Form C—Project Budget/Tabular Format or Form C1—Project Budget/Spreadsheet Format; Form D—Assurances; Disclosure of Lobbying Activities; a detailed 25-page description of the need for the project and all related tasks, including the time frame for completion of each task, and staffing requirements; and a detailed budget narrative that provides the basis for all costs. See section VII. for a complete description of application submission requirements.

D. Close-out

The process by which the Institute determines that all applicable administrative and financial actions and all required grant work have been completed by both the grantee and the Institute.

E. Concept Paper

A proposal of no more than eight double-spaced pages that outlines the nature and scope of a project that would be supported with State Justice Institute funds, accompanied by a preliminary

budget. See section VI. for a complete description of concept paper submission requirements.

F. Continuation Grant

A grant lasting no longer than 15 months to permit completion of activities initiated under an existing Institute grant or enhancement of the products or services produced during the prior grant period. See section VII.B. for a complete description of continuation application requirements.

G. Curriculum

The materials needed to replicate an education or training program developed with grant funds including, but not limited to: the learning objectives; the presentation methods; a sample agenda or schedule; an outline of presentations and relevant instructors' notes; copies of overhead transparencies or other visual aids; exercises, case studies, hypotheticals, quizzes, and other materials for involving the participants; background materials for participants; evaluation forms; and suggestions for replicating the program including possible faculty or the preferred qualifications or experience of those selected as faculty.

H. Curriculum Adaptation Grant

A grant of up to $20,000 to support an adaptation and pilot test of an educational program previously developed with SJI funds. See section VII.E. for a complete description of curriculum grant application requirements.

I. Designated Agency or Council

The office or judicial body which is authorized under State law or by delegation from the State Supreme Court to approve applications for funds and to receive, administer, and be accountable for those funds.

J. Disclaimer

A brief statement that must be included at the beginning of a document or in the opening frames of a videotape produced with State Justice Institute funding that specifies that the points of view expressed in the document or tape do not necessarily represent the official position or policies of the Institute. See section IX.A.10.a.(2) for the precise wording of this statement.

K. Grant Adjustment

A change in the design or scope of a project from that described in the approved application, acknowledged in writing by the Institute. See section XI.A. for a list of the types of changes requiring a formal grant adjustment.

L. Grantee

The organization, entity, or individual to which an award of Institute funds is made. For a grant based on an application from a State or local court, *grantee* refers to the State Supreme Court or its designee.

M. Human Subjects

Individuals who are participants in an experimental procedure or who are asked to provide information about themselves, their attitudes, feelings, opinions, and/or experiences through an interview, questionnaire, or other data collection technique.

N. Institute

The State Justice Institute.

O. Match

The portion of project costs not borne by the Institute. Match includes both in-kind and cash contributions. Cash match is the direct outlay of funds by the grantee to support the project. In-kind match consists of contributions of time, services, space, supplies, etc., made to the project by the grantee or others (e.g., advisory board members) working directly on the project. Under normal circumstances, allowable match may be incurred only during the project period. When appropriate, and with the prior written permission of the Institute, match may be incurred from the date of the Board of Directors' approval of an award. Match does not include project-related income such as tuition or revenue from the sale of grant products, or the time of participants attending an education program. Amounts contributed as cash or in-kind match may not be recovered through the sale of grant products during or following the grant period.

P. On-going Support Grant

A grant lasting 36 months to support a project that is national in scope and that provides the State courts with services, programs or products for which there is a continuing important need. See section VIII.B. for a complete description of on-going support application requirements.

Q. Products

Tangible materials resulting from funded projects including, but not limited to: Curricula; monographs; reports; books; articles; manuals; handbooks; benchbooks; guidelines; videotapes; audiotapes; computer software; and CD-ROM disks.

R. Project Grant

An initial grant lasting up to 15 months to support an innovative education, research, demonstration, or technical assistance project that can improve the administration of justice in State courts nationwide. Ordinarily, a project grant may not exceed $200,000 a year; however, a grant in excess of $150,000 is likely to be rare and awarded only to support highly promising projects that will have a significant national impact. See section VII.A. for a complete description of project grant application requirements.

S. Project-Related Income

Interest, royalties, registration and tuition fees, proceeds from the sale of products, and other earnings generated as a result of an Institute grant. Project-related income may not be counted as match. For a more complete description of different types of project-related income, see section X.G.

T. Scholarship

A grant of up to $1,500 awarded to a judge or court employee to cover the cost of tuition for and transportation to and from an out-of-State educational program within the United States. See section VII.F. for a complete description of scholarship application requirements.

U. Single Jurisdiction Project Grant

A grant that addresses a critical but not necessarily innovative need of a single State or local jurisdiction that cannot be met solely with State and/or local resources within the foreseeable future. See section II.D. for a description of single jurisdiction projects and section VI. and VII.A. for a complete description of single jurisdiction project application requirements.

V. Special Condition

A requirement attached to a grant award that is unique to a particular project.

W. State Supreme Court

The highest appellate court in a State, or, for the purposes of the Institute program, a constitutionally or legislatively established judicial council that acts in place of that court. In States having more than one court with final appellate authority, State Supreme Court shall mean that court which also has administrative responsibility for the State's judicial system. State Supreme Court also includes the office of the court or council, if any, it designates to perform the functions described in this Guideline.

X. Subgrantee

A State or local court which receives Institute funds through the State Supreme Court.

Y. Technical Assistance Grant

A grant, lasting up to 12 months, of up to $30,000 to a State or local court to support outside expert assistance in diagnosing a problem and developing and implementing a response to that problem. See section VII.D. for a complete description of technical assistance grant application requirements.

IV. Eligibility for Award

The Institute is authorized by Congress to award grants, cooperative agreements, and contracts to the following entities and types of organizations:

A. State and local courts and their agencies (42 U.S.C. 10705(b)(1)(A)). Each application for funding from a State or local court must be approved, consistent with State law, by the State's Supreme Court or its designated agency or council. The latter shall receive all Institute funds awarded to such courts and be responsible for assuring proper administration of Institute funds, in accordance with section IX.H. of this Guideline. A list of persons to contact in each State regarding approval of applications from State and local courts and administration of Institute grants to those courts is contained in Appendix C.

B. National nonprofit organizations controlled by, operating in conjunction with, and serving the judicial branches of State governments (42 U.S.C. 10705(b)(1)(B)).

C. National nonprofit organizations for the education and training of judges and support personnel of the judicial branch of State governments (42 U.S.C. 10705(b)(1)(C)). An applicant is considered a national education and training applicant if:

1. The principal purpose or activity of the applicant is to provide education and training to State and local judges and court personnel; and

2. The applicant demonstrates a record of substantial experience in the field of judicial education and training.

D. Other eligible grant recipients (42 U.S.C. 10705(b)(2)(A)–(D)).

1. Provided that the objectives of the project can be served better, the Institute is also authorized to make awards to:

a. Nonprofit organizations with expertise in judicial administration;

b. Institutions of higher education;

c. Individuals, partnerships, firms, corporations (for-profit organizations must waive their fees); and

d. Private agencies with expertise in judicial administration.

2. The Institute may also make awards to Federal, State or local agencies and institutions other than courts for services that cannot be adequately provided through nongovernmental arrangements (42 U.S.C. 10705(b)(3)).

E. Inter-agency Agreements. The Institute may enter into inter-agency agreements with Federal agencies (42 U.S.C. 10705(b)(4)) and private funders to support projects consistent with the purposes of the State Justice Institute Act.

V. Types of Projects and Grants; Size of Awards

A. Types of Projects

The Institute supports the following general types of projects:

1. Education and training;
2. Research and evaluation;
3. Demonstration; and
4. Technical assistance.

B. Types of Grants

The Institute supports the following types of grants:

1. Project Grants.

See sections II.B. and D., VI., and VII.A. The Institute places no annual limitations on the overall number of project grant awards or the number of awards in each special interest category.

2. Continuation Grants.

See sections III.E. and VII.B. In FY 2000, the Institute is allocating no more than 25% of available grant funds for continuation and on-going support grants.

3. On-going Support Grants.

See sections III.O. and VII.C. See Continuation Grants above for limitations on funding availability in FY 2000.

4. Technical Assistance Grants

See section II.E. In FY 2000, the Institute is reserving up to $400,000 for these grants.

5. Curriculum Adaptation Grants.

See sections II.B.2.b.(2), III.G., and VII.E. In FY 2000, the Institute is reserving up to $160,000 for adaptations of curricula previously developed with SJI funding.

6. Scholarships.

See section II.B.2.b.(3), III.S, and VII.F. In FY 2000, the Institute is reserving up to $200,000 for scholarships for judges and court employees. The Institute will reserve sufficient funds each quarter to assure the availability of scholarships throughout the year.

C. Maximum Size of Awards

1. Except as specified below, applicants for new project grants and continuation grants may request funding in amounts up to $200,000 for 15 months, although new and continuation awards in excess of $150,000 are likely to be rare and to be made, if at all, only for highly promising proposals that will have a significant impact nationally.

2. Applicants for on-going support grants may request funding in amounts up to $600,000 over three years, although awards in excess of $450,000 are likely to be rare. The Institute will ordinarily release funds for the second and third years of on-going support grants on the following conditions: (1) The project is performing satisfactorily; (2) appropriations are available to support the project that fiscal year; and (3) the Board of Directors determines that the project continues to fall within the Institute's priorities.

3. Applicants for technical assistance grants may request funding in amounts up to $30,000.

4. Applicants for curriculum adaptation grants may request funding in amounts up to $20,000.

5. Applicants for scholarships may request funding in amounts up to $1,500.

D. Length of Grant Periods

1. Grant periods for all new and continuation projects ordinarily may not exceed 15 months.

2. Grant periods for on-going support grants ordinarily may not exceed 36 months.

3. Grant periods for technical assistance grants and curriculum adaptation grants ordinarily may not exceed 12 months.

VI. Concept Papers

Concept papers are an extremely important part of the application process because they enable the Institute to learn the program areas of primary interest to the courts and to explore innovative ideas, without imposing heavy burdens on prospective applicants. The use of concept papers also permits the Institute to better project the nature and amount of grant awards. The concept paper requirement and the submission deadlines for concept papers and applications may be waived by the Executive Director for good cause (e.g., the proposed project could provide a significant benefit to the State courts or the opportunity to conduct the project did not arise until after the deadline).

A. Format and Content

All concept papers must include a cover sheet, a program narrative, and a preliminary budget.

1. The Cover Sheet

The cover sheet for all concept papers must contain:

a. A title that clearly describes the proposed project;

b. The name and address of the court, organization, or individual submitting the paper;

c. The name, title, address (if different from that in b.), and telephone number of a contact person who can provide further information about the paper;

d. The letter of the Special Interest Category (see section II.B.2.) or the number of the statutory Program Area (see section II.A.) that the proposed project addresses most directly; and

e. The estimated length of the proposed project.

Applicants requesting the Board to waive the application requirement and approve a grant of less than $40,000 based on the concept paper should add APPLICATION WAIVER REQUESTED to the information on the cover page.

2. The Program Narrative

The program narrative of a concept paper should be no longer than necessary, but must not exceed eight (8) double-spaced pages on 8½ by 11 inch paper. Margins must be at least 1 inch and type size must be at least 12 point and 12 cpi. The pages should be numbered. The narrative should describe:

a. Why is this project needed and how would it benefit State courts? If the project is to be conducted in a specific location(s), applicants should discuss the particular needs of the project site(s) to be addressed by the project, why those needs are not being met through the use of existing materials, programs, procedures, services, or other resources, and the benefits that would be realized by the proposed site(s).

If the project is not site-specific, applicants should discuss the problems that the proposed project would address, why existing materials, programs, procedures, services, or other resources cannot adequately resolve those problems, and the benefits that would be realized from the project by State courts generally.

b. What would be done if a grant is awarded? Applicants should include a summary description of the project to be conducted and the approach to be taken, including the anticipated length of the grant period. Applicants requesting a waiver of the application requirement for a grant of less than $40,000 should explain the proposed methods for conducting the project as fully as space allows, and include a detailed task schedule as an attachment to the concept paper.

c. How would the effects and quality of the project be determined? Applicants should include a summary description of how the project would be evaluated, including the criteria that would be used to measure its success or impact.

d. How would others find out about the project and be able to use the results? Applicants should describe the products that would result, the degree to which they would be applicable to courts across the nation, and to whom the products and results of the project would be disseminated in addition to the SJI-designated libraries (e.g., State chief justices, specified groups of trial judges, State court administrators, specified groups of trial court administrators, State judicial educators, or other audiences).

3. The Budget

a. Preliminary Budget. A preliminary budget must be attached to the narrative that includes the information specified on Form E included in Appendix H of this Guideline. Applicants should be aware that prior written Institute approval is required for any consultant rate in excess of $300 per day and that Institute funds may not be used to pay a consultant in excess of $900 per day.

b. Concept Papers Requesting Accelerated Award of a Grant of Less than $40,000. Applicants requesting a waiver of the application requirement and approval of a grant based on a concept paper under C. in this section must attach to Form E (see Appendix H) a budget narrative that explains the basis for each of the items listed and indicates whether the costs would be paid from grant funds, through a matching contribution, or from other sources. Courts requesting an accelerated award must also attach a Certificate of State Approval—Form B (Appendix I) signed by the Chief Justice of the State Supreme Court or the Chief Justice's designee.

4. Letters of Cooperation or Support

The Institute encourages concept paper applicants to attach letters of cooperation and support from the courts and related agencies that would be involved in or directly affected by the proposed project. Letters of support may be sent under separate cover; however, to ensure sufficient time to bring them to the Board's attention, support letters sent under separate cover must be received no later than January 5, 2000.

5. Page Limits

a. The Institute will not accept concept papers with program narratives exceeding eight double-spaced pages (see A.2. of this section). This page limit does not include the cover page, budget form, letters of cooperation or support, or, for papers requesting accelerated awards, the budget narrative and task schedule. Additional material should not be attached unless it is essential to impart a clear understanding of the project.

b. Applicants submitting more than one concept paper may include material that would be identical in each concept paper in a cover letter. This material will be incorporated by reference into each paper and counted against the eight-page limit for each. A copy of the cover letter should be attached to each copy of each concept paper.

6. Sample Concept Papers

Sample concept papers from previous funding cycles are available from the Institute upon request.

B. Submission Requirements

With the exception of papers following up on the National Conference on Pro Se Litigants Appearing in Court, an original and three copies of all concept papers submitted for consideration in Fiscal Year 2000—including those proposing projects emanating from the National Summit on Fatality Reviews held in October 1998; the National Conference on Public Trust and Confidence in the Justice System held in May 1999; and the National Symposium on the Future of Judicial Branch Education scheduled for October 1999—must be sent by first class or overnight mail or by courier (but not by fax or e-mail) no later than November 24, 1999.

Concept papers following up on the National Conference on Pro Se Litigants Appearing in Court must be sent by first class or overnight mail or by courier by March 17, 2000.

A postmark or courier receipt will constitute evidence of the submission date. All envelopes containing concept papers should be marked CONCEPT PAPER and sent to: State Justice Institute, 1650 King Street, Suite 600, Alexandria, Virginia 22314.

Receipt of each concept paper will be acknowledged by the Institute in writing. Extensions of the deadlines for submission of concept papers will not be granted.

C. Institute Review

1. Review Process

Concept papers will be reviewed competitively by the Institute's Board of Directors. Institute staff will prepare a narrative summary and a rating sheet assigning points for each relevant selection criterion for those concept papers which fall within the scope of the Institute's funding program and

merit serious consideration by the Board. Staff will also prepare a list of those papers that, in the judgment of the Executive Director, propose projects that lie outside the scope of the Institute's program or are not likely to merit serious consideration by the Board. The narrative summaries, rating sheets, and list of non-reviewed papers will be presented to the Board for its review. Committees of the Board will review concept paper summaries within assigned program areas and prepare recommendations for the full Board. The full Board of Directors will then decide which concept paper applicants will be invited to submit formal applications for funding. The decision to invite an application is solely that of the Board of Directors.

The Board may waive the application requirement and approve a grant based on a concept paper for a project requiring less than $40,000 when the need for and benefits of the project are clear and the methodology and budget require little additional explanation. Applicants considering whether to request consideration for an accelerated award should make certain that the proposed budget is sufficient to accomplish the project objectives in a quality manner. Because the Institute's experience has been that projects to conduct empirical research or a program evaluation ordinarily require a more thorough explanation of the methodology to be used than can be provided within the space limitations of a concept paper, the Board is unlikely to waive the application requirement for such projects.

2. Selection Criteria

a. All concept papers will be evaluated on the basis of the following criteria:

(1) The demonstration of need for the project;

(2) The soundness and innovativeness of the approach described;

(3) The benefits to be derived from the project;

(4) The reasonableness of the proposed budget;

(5) The proposed project's relationship to one of the ''Special Interest'' categories set forth in section II.B; and

(6) The degree to which the findings, procedures, training, technology, or other results of the project can be transferred to other jurisdictions.

Single jurisdiction concept papers will be rated on the proposed project's relation to one of the ''Special Interest'' categories set forth in section II.B. and the special requirements listed in section II.D. and VII.A.

b. In determining which concept papers will be approved for award or selected for development into full applications, the Institute will also consider the availability of financial assistance from other sources for the project; the amount and nature (cash or in-kind) of the applicant's anticipated match; whether the applicant is a State court, a national court support or education organization, a non-court unit of government, or another type of entity eligible to receive grants under the Institute's enabling legislation (see 42 U.S.C. 10705(b)), as amended, and section IV of this Grant Guideline); the extent to which the proposed project would also benefit the Federal courts or help the State courts enforce Federal constitutional and legislative requirements, and the level of appropriations available to the Institute in the current year and the amount expected to be available in succeeding fiscal years.

3. Notification to Applicants

The Institute will send written notice to all persons submitting concept papers, informing them of the Board's decisions regarding their papers and of the key issues and questions that arose during the review process. A decision by the Board not to invite an application may not be appealed, but applicants may resubmit the concept paper or a revision thereof in a subsequent funding cycle. The Institute will also notify the relevant State contact (all of whom are listed in Appendix C) when the Board invites applications submitted by courts within that State or that specify a participating site within that State.

VII. Applications

A. Project Grants

An application for a Project Grant must include an application form; budget forms (with appropriate documentation); a project abstract and program narrative; a disclosure of lobbying form, when applicable; and certain certifications and assurances. The Institute will send the required application forms to applicants invited to submit a full application. Applicants may photocopy the forms to make completion easier.

1. Forms

a. Application Form (FORM A). The application form requests basic information regarding the proposed project, the applicant, and the total amount of funding requested from the Institute. It also requires the signature of an individual authorized to certify on behalf of the applicant that the information contained in the application is true and complete; that submission of the application has been authorized by the applicant; and that if funding for the proposed project is approved, the applicant will comply with the requirements and conditions of the award, including the assurances set forth in Form D.

b. Certificate of State Approval (FORM B). An application from a State or local court must include a copy of FORM B signed by the State's Chief Justice or Chief Judge, the director of the designated agency, or the head of the designated council. The signature denotes that the proposed project has been approved by the State's highest court or the agency or council it has designated. It denotes further that if funding for the project is approved by the Institute, the court or the specified designee will receive, administer, and be accountable for the awarded funds.

c. Budget Forms (FORM C or C1). Applicants may submit the proposed project budget either in the tabular format of FORM C or in the spreadsheet format of FORM C1. Applicants requesting $100,000 or more are strongly encouraged to use the spreadsheet format. If the proposed project period is for more than a year, a separate form should be submitted for each year or portion of a year for which grant support is requested, as well as for the total length of the project.

In addition to FORM C or C1, applicants must provide a detailed budget narrative providing an explanation of the basis for the estimates in each budget category. (See 4. below in this section.)

If funds from other sources are required to conduct the project, either as match or to support other aspects of the project, the source, current status of the request, and anticipated decision date must be provided.

d. Assurances (FORM D). This form lists the statutory, regulatory, and policy requirements with which recipients of Institute funds must comply.

e. Disclosure of Lobbying Activities. Applicants other than units of State or local government are required to disclose whether they, or another entity that is part of the same organization as the applicant, have advocated a position before Congress on any issue, and to identify the specific subjects of their lobbying efforts. (See section IX.A.6.)

2. Project Abstract

The abstract should highlight the purposes, goals, methods and anticipated benefits of the proposed project. It should not exceed 1 single-spaced page on 8½ by 11 inch paper.

3. Program Narrative

The program narrative for an application may not exceed 25 double-spaced pages on 8½ by 11 inch paper. Margins must be at least 1 inch, and type size must be at least 12-point and 12 cpi. The pages should be numbered. This page limit does not include the forms, the abstract, the budget narrative, and any appendices containing resumes and letters of cooperation or endorsement. Additional background material should be attached only if it is essential to impart a clear understanding of the proposed project. Numerous and lengthy appendices are strongly discouraged.

The program narrative should address the following topics:

a. *Project Objectives.* The applicant should include a clear, concise statement of what the proposed project is intended to accomplish. In stating the objectives of the project, applicants should focus on the overall programmatic objective (e.g., to enhance understanding and skills regarding a specific subject, or to determine how a certain procedure affects the court and litigants) rather than on operational objectives (e.g., provide training for 32 judges and court managers, or review data from 300 cases).

b. *Program Areas to be Covered.* The applicant should note the Special Interest Category or Categories that are addressed by the proposed project (see section II.B.). If the proposed project does not fall within one of the Institute's Special Interest Categories, the applicant should list the Statutory Program Area or Areas that are addressed by the proposed project. (See section II.A.)

c. *Need for the Project.* If the project is to be conducted in a specific location(s), the applicant should discuss the particular needs of the project site(s) to be addressed by the project and why those needs are not being met through the use of existing materials, programs, procedures, services, or other resources.

If the project is not site-specific, the applicant should discuss the problems that the proposed project would address, and why existing materials, programs, procedures, services, or other resources cannot adequately resolve those problems. The discussion should include specific references to the relevant literature and to the experience in the field.

d. *Tasks, Methods and Evaluation.* (1) *Tasks and Methods.* The applicant should delineate the tasks to be performed in achieving the project objectives and the methods to be used for accomplishing each task. For example:

(a) For research and evaluation projects, the applicant should include the data sources, data collection strategies, variables to be examined, and analytic procedures to be used for conducting the research or evaluation and ensuring the validity and general applicability of the results. For projects involving human subjects, the discussion of methods should address the procedures for obtaining respondents' informed consent, ensuring the respondents' privacy and freedom from risk or harm, and the protection of others who are not the subjects of research but would be affected by the research. If the potential exists for risk or harm to the human subjects, a discussion should be included that explains the value of the proposed research and the methods to be used to minimize or eliminate such risk.

(b) For education and training projects, the applicant should include the adult education techniques to be used in designing and presenting the program, including the teaching/learning objectives of the educational design, the teaching methods to be used, and the opportunities for structured interaction among the participants; how faculty would be recruited, selected, and trained; the proposed number and length of the conferences, courses, seminars, or workshops to be conducted and the estimated number of persons who would attend them; the materials to be provided and how they would be developed; and the cost to participants.

(c) For demonstration projects, the applicant should include the demonstration sites and the reasons they were selected, or if the sites have not been chosen, how they would be identified and their cooperation obtained; and how the program or procedures would be implemented and monitored.

(d) For technical assistance projects, the applicant should explain the types of assistance that would be provided; the particular issues and problems for which assistance would be provided; how requests would be obtained and the type of assistance determined; how suitable providers would be selected and briefed; how reports would be reviewed; and the cost to recipients.

(2) *Evaluation.* Every project design must include an evaluation plan to determine whether the project met its objectives. The evaluation should be designed to provide an objective and independent assessment of the effectiveness or usefulness of the training or services provided; the impact of the procedures, technology, or services tested; or the validity and applicability of the research conducted. In addition, where appropriate, the evaluation process should be designed to provide on-going or periodic feedback on the effectiveness or utility of the project in order to promote its continuing improvement. The plan should present the qualifications of the evaluator(s); describe the criteria that would be used to evaluate the project's effectiveness in meeting its objectives; explain how the evaluation would be conducted, including the specific data collection and analysis techniques to be used; discuss why this approach would be appropriate; and present a schedule for completion of the evaluation within the proposed project period.

The evaluation plan should be appropriate to the type of project proposed. For example:

(a) Research. An evaluation approach suited to many research projects is a review by an advisory panel of the research methodology, data collection instruments, preliminary analyses, and products as they are drafted. The panel should be comprised of independent researchers and practitioners representing the perspectives affected by the proposed project.

(b) Education and Training. The most valuable approaches to evaluating educational or training programs reinforce the participants' learning experience while providing useful feedback on the impact of the program and possible areas for improvement. One appropriate evaluation approach is to assess the acquisition of new knowledge, skills, attitudes or understanding through participant feedback on the seminar or training event. Such feedback might include a self-assessment on what was learned along with the participant's response to the quality and effectiveness of faculty presentations, the format of sessions, the value or usefulness of the material presented, and other relevant factors. Another appropriate approach would be to use an independent observer who might request both verbal and written responses from participants in the program. When an education project involves the development of curricular materials, an advisory panel of relevant experts can be coupled with a test of the curriculum to obtain the reactions of participants and faculty as indicated above.

(c) Demonstration. The evaluation plan for a demonstration project should encompass an assessment of program effectiveness (e.g., how well did it work?); user satisfaction, if appropriate; the cost-effectiveness of the program; a

process analysis of the program (e.g., was the program implemented as designed, and/or did it provide the services intended to the targeted population?); the impact of the program (e.g., what effect did the program have on the court, and/or what benefits resulted from the program?); and the replicability of the program or components of the program.

(d) Technical Assistance. For technical assistance projects, applicants should explain how the quality, timeliness, and impact of the assistance provided would be determined, and develop a mechanism for feedback from both the users and providers of the technical assistance.

Evaluation plans involving human subjects should include a discussion of the procedures for obtaining respondents' informed consent, ensuring the respondents' privacy and freedom from risk or harm, and the protection of others who are not the subjects of evaluation but would be affected by it. Other than the provision of confidentiality to respondents, human subject protection issues ordinarily are not applicable to participants evaluating an education program.

e. Project Management. The applicant should present a detailed management plan, including the starting and completion date for each task; the time commitments to the project of key staff and their responsibilities regarding each project task; and the procedures that would ensure that all tasks are performed on time, within budget, and at the highest level of quality. In preparing the project time line, Gantt Chart, or schedule, applicants should make certain that all project activities, including publication or reproduction of project products and their initial dissemination, would occur within the proposed project period. The management plan must also provide for the submission of Quarterly Progress and Financial Reports within 30 days after the close of each calendar quarter (i.e., no later than January 30, April 30, July 30, and October 30).

Applicants should be aware that the Institute is unlikely to approve more than one limited extension of the grant period. Therefore, the management plan should be as realistic as possible and fully reflect the time commitments of the proposed project staff and consultants.

f. Products. The program narrative in the application should contain a description of the products to be developed (e.g., training curricula and materials, videotapes, articles, manuals, or handbooks), including when they would be submitted to the Institute. The budget should include the cost of producing and disseminating the product to each in-State SJI library, State chief justice, State court administrator, and other judges or court personnel.

(1) Dissemination Plan. The application must explain how and to whom the products would be disseminated; describe how they would benefit the State courts, including how they could be used by judges and court personnel; identify development, production, and dissemination costs covered by the project budget; and present the basis on which products and services developed or provided under the grant would be offered to the courts community and the public at large (*i.e.*, whether products would be distributed at no cost to recipients, or if costs are involved, the reason for charging recipients and the estimated price of the product). (See section IX.A.10.b.) Ordinarily, applicants should schedule all product preparation and distribution activities within the project period.

A copy of each product must be sent to the library established in each State to collect the materials developed with Institute support. (A list of these libraries is contained in Appendix D.) To facilitate their use, all videotaped products should be distributed in VHS format.

Seventeen (17) copies of all project products must be submitted to the Institute. A master copy of each videotape, in addition to 17 copies of each videotape product, must also be provided to the Institute.

(2) Types of Products and Press Releases. The type of product to be prepared depends on the nature of the project. For example, in most instances, the products of a research, evaluation, or demonstration project should include an article summarizing the project findings that is publishable in a journal serving the courts community nationally, an executive summary that would be disseminated to the project's primary audience, or both. Applicants proposing to conduct empirical research or evaluation projects with national import should describe how they would make their data available for secondary analysis after the grant period. (See section IX.A.13.a.)

The curricula and other products developed by education and training projects should be designed for use outside the classroom so that they may be used again by original participants and others in the course of their duties.

In addition, recipients of project grants must prepare a press release describing the project and announcing the results and distribute the release to a list of national and State judicial branch organizations. SJI will provide press release guidelines and a list of recipients to grantees at least 30 days before the end of the grant period.

(3) Institute Review. Applicants must submit a final draft of all written grant products to the Institute for review and approval at least 30 days before the products are submitted for publication or reproduction. For products in a videotape or CD–ROM format, applicants must provide for incremental Institute review of the product at the treatment, script, rough-cut, and final stages of development, or their equivalents. No grant funds may be obligated for publication or reproduction of a final grant product without the written approval of the Institute. (See section IX.A.10e.)

(4) Acknowledgment, Disclaimer, and Logo. Applicants must also include in all project products a prominent acknowledgment that support was received from the Institute and a disclaimer paragraph based on the example provided in section IX.A.10. of the Guideline. The ''SJI'' logo must appear on the front cover of a written product, or in the opening frames of a video, unless the Institute approves another placement.

g. Applicant Status. An applicant that is not a State or local court and has not received a grant from the Institute within the past two years should state whether it is either a national non-profit organization controlled by, operating in conjunction with, and serving the judicial branches of State governments; or a national non-profit organization for the education and training of State court judges and support personnel. See section IV. If the applicant is a nonjudicial unit of Federal, State, or local government, it must explain whether the proposed services could be adequately provided by non-governmental entities.

h. Staff Capability. The applicant should include a summary of the training and experience of the key staff members and consultants that qualify them for conducting and managing the proposed project. Resumes of identified staff should be attached to the application. If one or more key staff members and consultants are not known at the time of the application, a description of the criteria that would be used to select persons for these positions should be included. The applicant also should identify the person who would be responsible for the financial management and financial reporting for the proposed project.

i. Organizational Capacity. Applicants that have not received a grant from the Institute within the past two years should include a statement describing their capacity to administer grant funds, including the financial systems used to monitor project expenditures (and income, if any), and a summary of their past experience in administering grants, as well as any resources or capabilities that they have that would particularly assist in the successful completion of the project.

Unless requested otherwise, an applicant that has received a grant from the Institute within the past two years should describe only the changes in its organizational capacity, tax status, or financial capability that may affect its capacity to administer a grant.

If the applicant is a non-profit organization (other than a university), it must also provide documentation of its 501(c) tax-exempt status as determined by the Internal Revenue Service and a copy of a current certified audit report. For purposes of this requirement, current means no earlier than two years prior to the current calendar year.

If a current audit report is not available, the Institute will require the organization to complete a financial capability questionnaire which must be signed by a Certified Public Accountant. Other applicants may be required to provide a current audit report, a financial capability questionnaire, or both, if specifically requested to do so by the Institute.

j. Statement of Lobbying Activities. Non-governmental applicants must submit the Institute's Disclosure of Lobbying Activities Form, which documents whether they, or another entity that is a part of the same organization as the applicant, have advocated a position before Congress on any issue, and identifies the specific subjects of their lobbying efforts.

k. Letters of Cooperation or Support. If the cooperation of courts, organizations, agencies, or individuals other than the applicant is required to conduct the project, the applicant should attach written assurances of cooperation and availability to the application, or send them under separate cover. To ensure sufficient time to bring them to the Board's attention, letters of support sent under separate cover must be received no more than 30 days after the deadline for mailing the application.

4. Budget Narrative

The budget narrative should provide the basis for the computation of all project-related costs. When the proposed project would be partially supported by grants from other funding sources, applicants should make clear what costs would be covered by those other grants. Additional background or schedules may be attached if they are essential to obtaining a clear understanding of the proposed budget. Numerous and lengthy appendices are strongly discouraged.

The budget narrative should cover the costs of all components of the project and clearly identify costs attributable to the project evaluation. Under OMB grant guidelines incorporated by reference in this Guideline, grant funds may not be used to purchase alcoholic beverages.

a. Justification of Personnel Compensation. The applicant should set forth the percentages of time to be devoted by the individuals who would staff the proposed project, the annual salary of each of those persons, and the number of work days per year used for calculating the percentages of time or daily rates of those individuals. The applicant should explain any deviations from current rates or established written organizational policies. If grant funds are requested to pay the salary and related costs for a current employee of a court or other unit of government, the applicant should explain why this would not constitute a supplantation of State or local funds in violation of 42 U.S.C. 10706(d)(1). An acceptable explanation may be that the position to be filled is a new one established in conjunction with the project or that the grant funds would support only the portion of the employee's time that would be dedicated to new or additional duties related to the project.

b. Fringe Benefit Computation. The applicant should provide a description of the fringe benefits provided to employees. If percentages are used, the authority for such use should be presented, as well as a description of the elements included in the determination of the percentage rate.

c. Consultant/Contractual Services and Honoraria. The applicant should describe the tasks each consultant would perform, the estimated total amount to be paid to each consultant, the basis for compensation rates (e.g., the number of days multiplied by the daily consultant rates), and the method for selection. Rates for consultant services must be set in accordance with section X.I.2.c. Honorarium payments must be justified in the same manner as other consultant payments. Prior written Institute approval is required for any consultant rate in excess of $300 per day; Institute funds may not be used to pay a consultant more than $900 per day.

d. Travel. Transportation costs and per diem rates must comply with the policies of the applicant organization. If the applicant does not have an established travel policy, then travel rates must be consistent with those established by the Institute or the Federal Government. (A copy of the Institute's travel policy is available upon request.) The budget narrative should include an explanation of the rate used, including the components of the per diem rate and the basis for the estimated transportation expenses. The purpose of the travel should also be included in the narrative.

e. Equipment. Grant funds may be used to purchase only the equipment necessary to demonstrate a new technological application in a court or that is otherwise essential to accomplishing the objectives of the project. Equipment purchases to support basic court operations ordinarily will not be approved. The applicant should describe the equipment to be purchased or leased and explain why the acquisition of that equipment is essential to accomplish the project's goals and objectives. The narrative should clearly identify which equipment is to be leased and which is to be purchased. The method of procurement should also be described. Purchases for automatic data processing equipment must comply with section X.I.2.b.

f. Supplies. The applicant should provide a general description of the supplies necessary to accomplish the goals and objectives of the grant. In addition, the applicant should provide the basis for the amount requested for this expenditure category.

g. Construction. Construction expenses are prohibited except for the limited purposes set forth in section IX.A.15. Any allowable construction or renovation expense should be described in detail in the budget narrative.

h. Telephone. Applicants should include anticipated telephone charges, distinguishing between monthly charges and long distance charges in the budget narrative. Also, applicants should provide the basis used to calculate the monthly and long distance estimates.

i. Postage. Anticipated postage costs for project-related mailings, including distribution of the final product(s), should be described in the budget narrative. The cost of special mailings, such as for a survey or for announcing a workshop, should be distinguished from routine operational mailing costs. The bases for all postage estimates should be included in the budget narrative.

j. Printing/Photocopying. Anticipated costs for printing or photocopying project documents, reports, and publications should be included in the budget narrative, along with the bases used to calculate these estimates.

k. Indirect Costs. Applicants should describe the indirect cost rates applicable to the grant in detail. If costs often included within an indirect cost rate are charged directly (e.g., a percentage of the time of senior managers to supervise product activities), the applicant should specify that these costs are not included within its approved indirect cost rate. These rates must be established in accordance with section X.I.4. If the applicant has an indirect cost rate or allocation plan approved by any Federal granting agency, a copy of the approved rate agreement should be attached to the application.

l. Match. The applicant should describe the source of any matching contribution and the nature of the match provided. Any additional contributions to the project should be described in this section of the budget narrative as well. If in-kind match is to be provided, the applicant should describe how the amount and value of the time, services, or materials actually contributed would be documented for audit purposes. Applicants should be aware that the time spent by participants in education courses does not qualify as in-kind match.

Applicants that do not contemplate making matching contributions continuously throughout the course of the project or on a task-by-task basis must provide a schedule within 30 days after the beginning of the project period indicating at what points during the project period the matching contributions would be made. (See sections III.N., VIII.B., IX.A.7., and X.E.1.)

5. Submission Requirements

a. Every applicant must submit an original and four copies of the application package consisting of FORM A; FORM B, if the application is from a State or local court, or a Disclosure of Lobbying Form, if the applicant is not a unit of State or local government; the Budget Forms (either FORM C or C–1); the Application Abstract; Program Narrative; Budget Narrative; and any necessary appendices.

All applications invited by the Institute's Board of Directors must be sent by first class or overnight mail or by courier no later than May 10, 2000. A postmark or courier receipt will constitute evidence of the submission date. Please mark APPLICATION on the application package envelope and send it to: State Justice Institute, 1650 King Street, Suite 600, Alexandria, VA 22314.

Receipt of each application will be acknowledged in writing. Extensions of the deadline for submission of applications will not be granted. See 3.k. above in this section for deadlines for letters of support.

b. Applicants submitting more than one application may include material that would be identical in each application in a cover letter. This material will be incorporated by reference into each application and counted against the 25-page limit for the program narrative. A copy of the cover letter should be attached to each copy of each application.

B. Continuation Grant Applications

1. Purpose and Scope

Continuation grants are intended to support projects with a limited duration that involve the same type of activities as the previous project. They are intended to enhance the specific program or service produced or established during the prior grant period. They may be used, for example, when a project is divided into two or more sequential phases, for secondary analysis of data obtained in an Institute-supported research project, or for more extensive testing of an innovative technology, procedure, or program developed with SJI grant support. Continuation grants should be distinguished from on-going support grants, which are awarded to support critically needed long-term national scope projects. See C. below in this section.

The award of an initial grant to support a project does not constitute a commitment by the Institute to continue funding. For a project to be considered for continuation funding, the grantee must have completed all project tasks and met all grant requirements and conditions in a timely manner, absent extenuating circumstances or prior Institute approval of changes to the project design. Continuation grants are not intended to provide support for a project for which the grantee has underestimated the amount of time or funds needed to accomplish the project tasks.

2. Letters of Intent

In lieu of a concept paper, a grantee seeking a continuation grant must inform the Institute, by letter, of its intent to submit an application for such funding as soon as the need for continued funding becomes apparent but no less than 120 days before the end of the current grant period.

a. A letter of intent must be no more than 3 single-spaced pages on 8½ by 11 inch paper and contain a concise but thorough explanation of the need for continuation; an estimate of the funds to be requested; and a brief description of anticipated changes in the scope, focus, or audience of the project.

b. Within 30 days after receiving a letter of intent, Institute staff will review the proposed activities for the next project period and inform the grantee of specific issues to be addressed in the continuation application and the date by which the application must be submitted.

3. Application Format

An application for a continuation grant must include an application form, budget forms (with appropriate documentation), a project abstract conforming to the format set forth in A.2. of this section, a program narrative, a budget narrative, a Certificate of State Approval—FORM B (Appendix I) if the applicant is a State or local court, a disclosure of lobbying form (from applicants other than units of State or local government), and any necessary appendices.

The program narrative should conform to the length and format requirements set forth in A.3. of this section. However, rather than the topics listed there, the program narrative of a continuation application should include:

a. Project Objectives. The applicant should clearly and concisely state what the continuation project is intended to accomplish.

b. Need for Continuation. The applicant should explain why continuation of the project is necessary to achieve the goals of the project, and how the continuation would benefit the participating courts or the courts community generally, by explaining, for example, how the original goals and objectives of the project would be unfulfilled if it were not continued; or how the value of the project would be enhanced by its continuation.

c. Report of Current Project Activities. The applicant should discuss the status of all activities conducted during the previous project period. Applicants should identify any activities that were not completed, and explain why.

d. Evaluation Findings. The applicant should present the key findings, impact, or recommendations resulting from the evaluation of the project, if available, and how they would be addressed during the proposed continuation. If the findings are not yet available, the

applicant should provide the date by which they would be submitted to the Institute. Ordinarily, the Board will not consider an application for continuation funding until the Institute has received the evaluator's report.

e. Tasks, Methods, Staff and Grantee Capability. The applicant should fully describe any changes in the tasks to be performed, the methods to be used, the products of the project, and how and to whom those products would be disseminated, as well as any changes in the assigned staff or the grantee's organizational capacity. Applicants should include, in addition, the criteria and methods by which the proposed continuation project would be evaluated.

f. Task Schedule. The applicant should present a detailed task schedule and timeline for the next project period.

g. Other Sources of Support. The applicant should indicate why other sources of support would be inadequate, inappropriate, or unavailable.

4. Budget and Budget Narrative

The applicant should provide a complete budget and budget narrative conforming to the requirements set forth in A.4. in this section. Changes in the funding level requested should be discussed in terms of corresponding increases or decreases in the scope of activities or services to be rendered. In addition, the applicant should estimate the amount of grant funds that would remain unobligated at the end of the current grant period.

5. References to Previously Submitted Material

A continuation application should not repeat information contained in a previously approved application or other previously submitted materials, but should provide specific references to such materials where appropriate.

6. Submission Requirements

The submission requirements set forth in A.5. in this section, other than the mailing deadline, apply to continuation applications.

C. On-going Support Grants

1. Purpose and Scope

On-going support grants are intended to support projects that are national in scope and provide the State courts with services, programs or products for which there is a continuing critical need. An on-going support grant may also be used to fund longitudinal research that directly benefits the State courts. On-going support grants are subject to the limits on size and duration set forth in V.C.2. and V.D.2. The Board will consider awarding an on-going support grant for a period of up to 36 months. The total amount of the grant will be fixed at the time of the initial award. Funds ordinarily will be made available in annual increments as specified in section V.C.2.

The award of an initial grant to support a project does not constitute a commitment by the Institute to provide on-going support at the end of the original project period. A project is eligible for consideration for an on-going support grant if:

a. The project is supported by and has been evaluated under a grant from the Institute;

b. The project is national in scope and provides a significant benefit to the State courts;

c. There is a continuing critical need for the services, programs or products provided by the project, indicated by the level of use and support by members of the court community;

d. The project is accomplishing its objectives in an effective and efficient manner; and

e. It is likely that the service or program provided by the project would be curtailed or significantly reduced without Institute support.

Each on-going support application must include an evaluation component assessing its effectiveness and operation throughout the grant period. The evaluation should be independent but may be designed collaboratively by the evaluator and the grantee. The design should call for regular feedback from the evaluator to the grantee throughout the project period concerning recommendations for mid-course corrections or improvement of the project, as well as periodic reports to the Institute at relevant points in the project.

An interim evaluation report must be submitted 18 months into the 3-year grant period. The decision to release Institute funds to support the third year of the project will be based on the interim evaluation findings and the applicant's response to any deficiencies noted in the report, as well as the availability of appropriations and the project's consistency with the Institute's priorities.

A final evaluation assessing the effectiveness, operation of, and continuing need for the project must be submitted 90 days before the end of the 3-year project period. In addition, a detailed annual task schedule must be submitted not later than 45 days before the end of the first and second years of the grant period, along with an explanation of any necessary revisions in the projected costs for the remainder of the project period.

2. Letters of Intent

In lieu of a concept paper, an applicant seeking an on-going support grant must inform the Institute, by letter, of its intent to submit an application for such funding as soon as the need for continuing funding becomes apparent but no less than 120 days before the end of the current grant period. The letter of intent should be in the same format as that prescribed for continuation grants in B.2. of this section.

3. Format

An application for an on-going support grant must include an application form; budget forms (with appropriate documentation); a Certificate of State Approval—FORM B (Appendix I) if the applicant is a State or local court; a Disclosure of Lobbying Activities form (from applicants other than units of State or local government); a project abstract conforming to the format set forth in A.2. of this section; a program narrative; a budget narrative; and any necessary appendices.

The program narrative should conform to the length and format requirements set forth in A.3. of this section; however, rather than the topics listed there, the program narrative of applications for on-going support grants should address:

a. Description of Need for and Benefits of the Project. The applicant should provide a detailed discussion of the benefits provided by the project to the State courts around the country, including the degree to which State courts, State court judges, or State court managers and personnel are using the services or programs provided by the project.

b. Demonstration of Court Support. The applicant should demonstrate support for the continuation of the project from the courts community.

c. Report on Current Project Activities. The applicant should discuss the extent to which the project has met its goals and objectives, identify any activities that have not been completed, and explain why they have not been completed.

d. Evaluation Findings. The applicant should attach a copy of the final evaluation report regarding the effectiveness, impact, and operation of the project, specify the key findings or recommendations resulting from the evaluation, and explain how they would be addressed during the next three years. Ordinarily, the Board will not consider an application for on-going

support until the Institute has received the evaluator's report.

e. Objectives, Tasks, Methods, Staff and Grantee Capability. The applicant should describe fully any changes in the objectives; tasks to be performed; the methods to be used; the products of the project; how and to whom those products would be disseminated; the assigned staff; and the grantee's organizational capacity. The grantee also should describe the steps it would take to obtain support from other sources for the continued operation of the project.

f. Task Schedule. The applicant should present a general schedule for the full proposed project period and a detailed task schedule for the first year of the proposed new project period.

g. Other Sources of Support. The applicant should describe what efforts it has taken to secure support for the project from other sources.

4. Budget and Budget Narrative

The applicant should provide a complete three-year budget and budget narrative conforming to the requirements set forth in A.4. of this section, and estimate the amount of grant funds that would remain unobligated at the end of the current grant period. Changes in the funding level requested should be discussed in terms of corresponding increases or decreases in the scope of activities or services to be rendered. A complete budget narrative should be provided for the full project as well as for each year, or portion of a year, for which grant support is requested. The budget should provide for realistic cost-of-living and staff salary increases over the course of the requested project period. Applicants should be aware that the Institute is unlikely to approve a supplemental budget increase for an on-going support grant in the absence of well-documented, unanticipated factors that would clearly justify the requested increase.

5. References to Previously Submitted Material

An application for an on-going support grant should not repeat information contained in a previously approved application or other previously submitted materials, but should provide specific references to such materials where appropriate.

6. Submission Requirements

The submission requirements set forth in A.5. of this section, other than the mailing deadline, apply to applications for on-going support grants.

D. Technical Assistance Grants

1. Purpose and Scope

Technical assistance grants are awarded to State and local courts to obtain the assistance of outside experts in diagnosing, developing, and implementing a response to a particular problem in a jurisdiction.

2. Application Procedures

In lieu of formal applications, applicants for Technical Assistance grants may submit, at any time, an original and three copies of a detailed letter describing the proposed project. Letters from an individual trial or appellate court must be signed by the presiding judge or manager of that court. Letters from the State court system must be signed by the Chief Justice or State Court Administrator.

3. Application Format

Although there is no prescribed form for the letter nor a minimum or maximum page limit, letters of application should include the following information:

a. Need for Funding. What is the critical need facing the court? How would the proposed technical assistance help the court meet this critical need? Why cannot State or local resources fully support the costs of the required consultant services?

b. Project Description. What tasks would the consultant be expected to perform, and how would they be accomplished? Which organization or individual would be hired to provide the assistance, and how was this consultant selected? If a consultant has not yet been identified, what procedures and criteria would be used to select the consultant? (Applicants are expected to follow their jurisdictions' normal procedures for procuring consultant services.) What is the time frame for completion of the technical assistance? How would the court oversee the project and provide guidance to the consultant, and who at the court would be responsible for coordinating all project tasks and submitting quarterly progress and financial status reports?

If the consultant has been identified, the applicant should provide a letter from that individual or organization documenting interest in and availability for the project, as well as the consultant's ability to complete the assignment within the proposed time frame and for the proposed cost. The consultant must agree to submit a detailed written report to the court and the Institute upon completion of the technical assistance.

c. Likelihood of Implementation. What steps have been or would be taken to facilitate implementation of the consultant's recommendations upon completion of the technical assistance? For example, if the support or cooperation of specific court officials or committees, other agencies, funding bodies, organizations, or a court other than the applicant would be needed to adopt the changes recommended by the consultant and approved by the court, how would they be involved in the review of the recommendations and development of the implementation plan?

d. Support for the Project from the State Supreme Court or its Designated Agency or Council. Written concurrence on the need for the technical assistance must be submitted. This concurrence may be a copy of SJI Form B (see Appendix I) signed by the Chief Justice of the State Supreme Court or the Chief Justice's designee, or a letter from the State Chief Justice or designee. The concurrence may be submitted with the applicant's letter or under separate cover prior to consideration of the application. The concurrence also must specify whether the State Supreme Court would receive, administer, and account for the grant funds, if awarded, or would designate the local court or a specified agency or council to receive the funds directly.

4. Budget and Matching State Contribution

A completed Form E, Preliminary Budget (see Appendix H) and budget narrative must be included with the letter requesting technical assistance. The estimated cost of the technical assistance services should be broken down into the categories listed on the budget form rather than aggregated under the Consultant/Contractual category.

The budget narrative should provide the basis for all project-related costs, including the basis for determining the estimated consultant costs, if compensation of the consultant is required (e.g., the number of days per task times the requested daily consultant rate). Applicants should be aware that consultant rates above $300 per day must be approved in advance by the Institute, and that no consultant will be paid more than $900 per day. In addition, the budget should provide for submission of two copies of the consultant's final report to the Institute.

Recipients of technical assistance grants do not have to submit an audit but must maintain appropriate documentation to support expenditures. (See section IX.A.3.)

5. Submission Requirements

Letters of application may be submitted at any time; however, all of the letters received during a calendar quarter will be considered at one time. Applicants submitting letters between June 12 and September 30, 1999 will be notified of the Board's decision by December 10, 1999; those submitting letters between October 1, 1999 and January 14, 2000 will be notified by March 31, 2000; notification of the Board's decisions concerning letters mailed between January 15 and March 11, 2000, will be made by May 26, 2000; and notice of decisions regarding letters submitted between March 11 and June 10, 2000 will be made by August 25, 2000. Subject to the availability of sufficient appropriations for fiscal year 2000, applicants submitting letters between June 11 and September 29, 2000, will be notified by December 15, 2000.

If the support or cooperation of agencies, funding bodies, organizations, or courts other than the applicant would be needed in order for the consultant to perform the required tasks, written assurances of such support or cooperation should accompany the application letter. Support letters also may be submitted under separate cover; however, to ensure that there is sufficient time to bring them to the attention of the Board's Technical Assistance Committee, letters sent under separate cover must be received not less than three weeks prior to the Board meeting at which the technical assistance requests will be considered (i.e., by October 21, 1999, and February 10, April 13, and July 7, 2000).

E. Curriculum Adaptation Grants

1. Purpose and Scope

Curriculum Adaptation grants are available to State and local courts to support replication or modification of a model training program originally developed with Institute funds. Ordinarily, Curriculum Adaptation grants may not be used to support more than two presentations of a curriculum.

2. Application Procedures

In lieu of concept papers and formal applications, applicants should submit an original and three photocopies of a detailed letter.

3. Application Format

Although there is no prescribed format for the letter, or a minimum or maximum page limit, letters of application should include the following information:

a. Project Description. What is the title of the model curriculum to be adapted and who developed it? What are the project's goals? Why is this education program needed at the present time? What program components would be implemented, and what types of modifications, if any, are anticipated in length, format, learning objectives, teaching methods, or content? Who would be responsible for adapting the model curriculum? Who would the participants be, how many would there be, how would they be recruited, and from where would they come (*e.g.,* from across the State, from a single local jurisdiction, from a multi-State region)?

b. Need for Funding. Why are sufficient State or local resources unavailable to fully support the modification and presentation of the model curriculum? What is the potential for replicating or integrating the program in the future using State or local funds, once it has been successfully adapted and tested?

c. Likelihood of Implementation. What is the proposed timeline and what process would be used for modifying and presenting the program? Who would serve as faculty, and how were they selected? What measures would be taken to evaluate and facilitate subsequent improvements in presentations of the program? (Ordinarily, an independent evaluation of a curriculum adaptation project is not required; however, the results of any evaluation should be included in the final report.)

d. Expressions of Interest by Judges and/or Court Personnel. Does the proposed program have the support of the court system leadership, and of judges, court managers, and judicial education personnel who are expected to attend? (This may be demonstrated by attaching letters of support.)

e. Chief Justice's Concurrence. Local courts should attach a concurrence form signed by the Chief Justice of the State or his or her designee. (See Form B, Appendix I.)

4. Budget and Matching State Contribution

Applicants should attach a copy of budget Form E (see Appendix H) and a budget narrative (see A.4. in this section) that describes the basis for the computation of all project-related costs and the source of the match offered. As with other awards to State or local courts, cash or in-kind match must be provided in an amount equal to at least 50% of the grant amount requested.

5. Submission Requirements

Letters of application may be submitted at any time. However, applicants should allow at least 90 days between the date of submission and the date of the proposed program to allow sufficient time for needed planning.

F. Scholarships

1. Purpose and Scope

The purposes of the Institute scholarship program are to enhance the skills, knowledge, and abilities of judges and court managers; enable State court judges and court managers to attend out-of-State educational programs sponsored by national and State providers that they could not otherwise attend because of limited State, local and personal budgets; and provide States, judicial educators, and the Institute with evaluative information on a range of judicial and court-related education programs.

Scholarships will be granted to individuals only for the purpose of attending an educational program in another State. An applicant may apply for a scholarship for only one educational program during any one application cycle.

Scholarship funds may be used only to cover the costs of tuition and transportation expenses. Transportation expenses may include round-trip coach airfare or train fare. Scholarship recipients are strongly encouraged to take advantage of excursion or other special air fares (e.g., reductions offered when a ticket is purchased 21 days in advance of the travel date or because the traveler is staying over a Saturday night) when making their travel arrangements. Recipients who drive to a program site may receive $.31/mile up to the amount of the advanced-purchase round-trip airfare between their homes and the program sites. Funds to pay tuition and transportation expenses in excess of $1,500 and other costs of attending the program—such as lodging, meals, materials, transportation to and from airports, and local transportation (including rental cars)—at the program site must be obtained from other sources or be borne by the scholarship recipient. Scholarship applicants are encouraged to check other sources of financial assistance and to combine aid from various sources whenever possible.

A scholarship is not transferable to another individual. It may be used only for the course specified in the application unless attendance at a different course that meets the eligibility requirements is approved in writing by the Institute. Decisions on such requests

will be made within 30 days after the receipt of the request letter.

2. Eligibility Requirements

a. Recipients. Scholarships can be awarded only to full-time judges of State or local trial and appellate courts; full-time professional, State or local court personnel with management responsibilities; and supervisory and management probation personnel in judicial branch probation offices. Senior judges, part-time judges, quasi-judicial hearing officers including referees and commissioners, State administrative law judges, staff attorneys, law clerks, line staff, law enforcement officers, and other executive branch personnel are not eligible to receive Scholarships.

b. Courses. A Scholarship can be awarded only for a course presented in a State other than the one in which the applicant resides or works that is designed to enhance the skills of new or experienced judges and court managers; address any of the topics listed in the Institute's Special Interest categories; or is offered by a recognized graduate program for judges or court managers. The annual or mid-year meeting of a State or national organization of which the applicant is a member does not qualify as an out-of-State educational program for scholarship purposes, even though it may include workshops or other training sessions.

Applicants are encouraged not to wait for the decision on a Scholarship to register for an educational program they wish to attend.

3. Forms

a. Judicial Education Scholarship Application—FORM S–1 (Appendix G). The application form requests basic information about the applicant and the educational program the applicant would like to attend. It also addresses the applicant's commitment to share the skills and knowledge gained with local court colleagues and to submit an evaluation of the program the applicant attends.

b. Scholarship Application Concurrence—FORM S–2 (Appendix G). Judges and court managers applying for Scholarships must submit the written concurrence of the Chief Justice of the State's Supreme Court (or the Chief Justice's designee) on the Institute's Judicial Education Scholarship Concurrence form (see Appendix G). The signature of the presiding judge of the applicant's court cannot be substituted for that of the Chief Justice or the Chief Justice's designee. Court managers, other than elected clerks of court, also must submit letters of support from their immediate supervisors.

4. Submission Requirements

Scholarship applications must be submitted during the periods specified below:

October 1–December 1, 1999, for programs beginning between *January 1 and March 31, 2000;*

January 7–March 7, 2000, for programs beginning between April 1 and June 30, 2000;

April 3–June 1, 2000, for programs beginning between July 1 and September 30, 2000;

July 5–September 1, 2000, for programs beginning between October 1 and December 31, 2000; and

October 2–December 1, 2000, for programs beginning between January 1 and March 31, 2001.

No exceptions or extensions will be granted. Applications sent prior to the beginning of an application period will be treated as having been sent one week *after the beginning of that application period.* All the required items must be received for an application to be considered. If the Concurrence form or letter of support is sent separately from the application, the postmark date of the last item to be sent will be used in applying the above criteria.

All applications should be sent by mail or courier (not fax or e-mail) to: Scholarship Program Coordinator, State Justice Institute, 1650 King Street, Suite 600, Alexandria, VA 22314.

VIII. Application Review Procedures

A. Preliminary Inquiries

The Institute staff will answer inquiries concerning application procedures. The staff contact will be named in the Institute's letter acknowledging receipt of the application.

B. Selection Criteria

1. Project, Continuation, and On-Going Support Grant Applications

a. All applications will be rated on the basis of the criteria set forth below. The Institute will accord the greatest weight to the following criteria:

(1) The soundness of the methodology;

(2) The demonstration of need for the project;

(3) The appropriateness of the proposed evaluation design;

(4) The applicant's management plan and organizational capabilities;

(5) The qualifications of the project's staff;

(6) The products and benefits resulting from the project including the extent to which the project will have long-term benefits for State courts across the nation;

(7) The degree to which the findings, procedures, training, technology, or other results of the project can be transferred to other jurisdictions.

(8) The reasonableness of the proposed budget;

(9) The demonstration of cooperation and support of other agencies that may be affected by the project; and

(10) The proposed project's relationship to one of the ''Special Interest'' categories set forth in section II.B.

b. For continuation and on-going support grant applications, the key findings and recommendations of evaluations and the proposed responses to those findings and recommendations also will be considered.

c. In determining which applicants to fund, the Institute will also consider whether the applicant is a State court, a national court support or education organization, a non-court unit of government, or other type of entity eligible to receive grants under the Institute's enabling legislation (see 42 U.S.C. 10705(6) (as amended) and Section IV. above); the availability of financial assistance from other sources for the project; the amount and nature (cash or in-kind) of the applicant's match; the extent to which the proposed project would also benefit the Federal courts or help State courts enforce Federal constitutional and legislative requirements; and the level of appropriations available to the Institute in the current year and the amount expected to be available in succeeding fiscal years.

2. Technical Assistance Grant Applications

Technical Assistance grant applications will be rated on the basis of the following criteria:

a. Whether the assistance would address a critical need of the court;

b. The soundness of the technical assistance approach to the problem;

c. The qualifications of the consultant(s) to be hired, or the specific criteria that will be used to select the consultant(s);

d. Commitment on the part of the court to act on the consultant's recommendations; and

e. The reasonableness of the proposed budget.

The Institute also will consider factors such as the level and nature of the match that would be provided, diversity of subject matter, geographic diversity, the level of appropriations available to the Institute in the current year, and the

amount expected to be available in succeeding fiscal years.

3. Curriculum Adaptation Grant Applications

Curriculum Adaptation grant applications will be rated on the basis of the following criteria:

a. The goals and objectives of the proposed project;

b. The need for outside funding to support the program;

c. The appropriateness of the approach in achieving the project's educational objectives;

d. The likelihood of effective implementation and integration into the State's or local jurisdiction's ongoing educational programming; and

e. Expressions of interest by the judges and/or court personnel who would be directly involved in or affected by the project.

The Institute will also consider factors such as the reasonableness of the amount requested, compliance with match requirements, diversity of subject matter, geographic diversity, the level of appropriations available in the current year, and the amount expected to be available in succeeding fiscal years.

4. Scholarships

Scholarships will be awarded on the basis of:

a. The date on which the application and concurrence (and support letter, if required) were sent;

b. The unavailability of State or local funds to cover the costs of attending the program or scholarship funds from another source;

c. The absence of educational programs in the applicant's State addressing the topic(s) covered by the educational program for which the scholarship is being sought;

d. Geographic balance among the recipients;

e. The balance of scholarships among educational programs;

f. The balance of scholarships among the types of courts represented; and

g. The level of appropriations available to the Institute in the current year and the amount expected to be available in succeeding fiscal years.

The postmark or courier receipt will be used to determine the date on which the application form and other required items were sent.

C. Review and Approval Process

1. Project, Continuation, and On-going Support Grant Applications

Applications will be reviewed competitively by the Board of Directors. The Institute staff will prepare a narrative summary of each application and a rating sheet assigning points for each relevant selection criterion. When necessary, applications may also be reviewed by outside experts. Committees of the Board will review applications within assigned program categories and prepare recommendations to the full Board. The full Board of Directors will then decide which applications to approve for grants. The decision to award a grant is solely that of the Board of Directors.

Awards approved by the Board will be signed by the Chairman of the Board on behalf of the Institute.

2. Technical Assistance and Curriculum Adaptation Grant Applications

The Institute staff will prepare a narrative summary of each application and a rating sheet assigning points for each relevant selection criterion. Applications will be reviewed competitively by a committee of the Board of Directors. The Board of Directors has delegated its authority to approve Technical Assistance and Curriculum Adaptation grants to the committee established for each program.

Approved awards will be signed by the Chairman of the Board on behalf of the Institute.

3. Scholarships

Scholarship applications are reviewed quarterly by a committee of the Institute's Board of Directors. The Board of Directors has delegated its authority to approve Scholarships to the committee established for the program.

Approved awards will be signed by the Chairman of the Board on behalf of the Institute.

D. Return Policy

Unless a specific request is made, unsuccessful applications will not be returned. Applicants are advised that Institute records are subject to the provisions of the Federal Freedom of Information Act, 5 U.S.C. 552.

E. Notification of Board Decision

1. The Institute will send written notice to applicants concerning all Board decisions to approve, defer, or deny their respective applications. For all except Scholarship applications, the Institute also will convey the key issues and questions that arose during the review process. A decision by the Board to deny an application may not be appealed, but it does not prohibit resubmission of a proposal based on that application in a subsequent funding cycle. With respect to awards other than Scholarships, the Institute will also notify the designated State contact listed in Appendix C when grants are approved by the Board to support projects that will be conducted by or involve courts in that State.

2. The Board anticipates acting upon Curriculum Adaptation grant applications within 45 days after receipt. Grant funds will be available only after Board approval, and negotiation of the final terms of the grant.

3. The Institute intends to notify each Scholarship applicant of the Board committee's decision within 30 days after the close of the relevant application period.

F. Response to Notification of Approval

With the exception of those approved for Scholarships, applicants have 30 days from the date of the letter notifying them that the Board has approved their application to respond to any revisions requested by the Board. If the requested revisions (or a reasonable schedule for submitting such revisions) have not been submitted to the Institute within 30 days after notification, the approval may be automatically rescinded and the application presented to the Board for reconsideration.

IX. Compliance Requirements

The State Justice Institute Act contains limitations and conditions on grants, contracts, and cooperative agreements awarded by the Institute. The Board of Directors has approved additional policies governing the use of Institute grant funds. These statutory and policy requirements are set forth below.

A. Recipients of Project Grants

1. Advocacy

No funds made available by the Institute may be used to support or conduct training programs for the purpose of advocating particular nonjudicial public policies or encouraging nonjudicial political activities. 42 U.S.C. 10706(b).

2. Approval of Key Staff

If the qualifications of an employee or consultant assigned to a key project staff position are not described in the application or if there is a change of a person assigned to such a position, the recipient must submit a description of the qualifications of the newly assigned person to the Institute. Prior written approval of the qualifications of the new person assigned to a key staff position must be received from the Institute before the salary or consulting fee of that person and associated costs may be paid or reimbursed from grant funds.

3. Audit

Recipients of project grants must provide for an annual fiscal audit which includes an opinion on whether the financial statements of the grantee present fairly its financial position and financial operations are in accordance with generally accepted accounting principles. (See section X.K. of the Guideline for the requirements of such audits.) Recipients of scholarships or curriculum adaptation or technical assistance grants are not required to submit an audit, but must maintain appropriate documentation to support all expenditures.

4. Conflict of Interest

Personnel and other officials connected with Institute-funded programs must adhere to the following requirements:

a. No official or employee of a recipient court or organization shall participate personally through decision, approval, disapproval, recommendation, the rendering of advice, investigation, or otherwise in any proceeding, application, request for a ruling or other determination, contract, grant, cooperative agreement, claim, controversy, or other particular matter in which Institute funds are used, where, to his or her knowledge, he or she or his or her immediate family, partners, organization other than a public agency in which he or she is serving as officer, director, trustee, partner, or employee or any person or organization with whom he or she is negotiating or has any arrangement concerning prospective employment, or has a financial interest.

b. In the use of Institute project funds, an official or employee of a recipient court or organization shall avoid any action which might result in or create the appearance of:

(1) Using an official position for private gain; or

(2) Affecting adversely the confidence of the public in the integrity of the Institute program.

c. Requests for proposals or invitations for bids issued by a recipient of Institute funds or a subgrantee or subcontractor will provide notice to prospective bidders that the contractors who develop or draft specifications, requirements, statements of work, and/or requests for proposals for a proposed procurement will be excluded from bidding on or submitting a proposal to compete for the award of such procurement.

5. Inventions and Patents

If any patentable items, patent rights, processes, or inventions are produced in the course of Institute-sponsored work, such fact shall be promptly and fully reported to the Institute. Unless there is a prior agreement between the grantee and the Institute on disposition of such items, the Institute shall determine whether protection of the invention or discovery shall be sought. The Institute will also determine how the rights in the invention or discovery, including rights under any patent issued thereon, shall be allocated and administered in order to protect the public interest consistent with ''Government Patent Policy'' (President's Memorandum for Heads of Executive Departments and Agencies, February 18, 1983, and statement of Government Patent Policy).

6. Lobbying

a. Funds awarded to recipients by the Institute shall not be used, indirectly or directly, to influence Executive orders or similar promulgations by Federal, State or local agencies, or to influence the passage or defeat of any legislation by Federal, State or local legislative bodies. 42 U.S.C. 10706(a).

b. It is the policy of the Board of Directors to award funds only to support applications submitted by organizations that would carry out the objectives of their applications in an unbiased manner. Consistent with this policy and the provisions of 42 U.S.C. 10706, the Institute will not knowingly award a grant to an applicant that has, directly or through an entity that is part of the same organization as the applicant, advocated a position before Congress on the specific subject matter of the application.

7. Matching Requirements

a. All awards to courts or other units of State or local government (not including publicly supported institutions of higher education) require a match from private or public sources of not less than 50% of the total amount of the Institute's award. For example, if the total cost of a project is anticipated to be $150,000, a State court or executive branch agency may request up to $100,000 from the Institute to implement the project. The remaining $50,000 (50% of the $100,000 requested from SJI) must be provided as a match. A cash match, non-cash match, or both may be provided, but the Institute will give preference to those applicants that provide a cash match to the Institute's award. (For a further definition of match, see section III.N.)

b. The requirement to provide match may be waived in exceptionally rare circumstances upon the request of the Chief Justice of the highest court in the State and approval by the Board of Directors. 42 U.S.C. 10705(d).

c. Other eligible recipients of Institute funds are not required to provide a match, but are encouraged to contribute to meeting the costs of the project. In instances where match is proposed, the grantee is responsible for ensuring that the total amount proposed is actually contributed. If a proposed contribution is not fully met, the Institute may reduce the award amount accordingly, in order to maintain the ratio originally provided for in the award agreement (see sections VIII.B. and X.E).

8. Nondiscrimination

No person may, on the basis of race, sex, national origin, disability, color, or creed be excluded from participation in, denied the benefits of, or otherwise subjected to discrimination under any program or activity supported by Institute funds. Recipients of Institute funds must immediately take any measures necessary to effectuate this provision.

9. Political Activities

No recipient may contribute or make available Institute funds, program personnel, or equipment to any political party or association, or the campaign of any candidate for public or party office. Recipients are also prohibited from using funds in advocating or opposing any ballot measure, initiative, or referendum. Officers and employees of recipients shall not intentionally identify the Institute or recipients with any partisan or nonpartisan political activity associated with a political party or association, or the campaign of any candidate for public or party office. 42 U.S.C. 10706(a).

10. Products

a. Acknowledgment, Logo, and Disclaimer. (1) Recipients of Institute funds must acknowledge prominently on all products developed with grant funds that support was received from the Institute. The ''SJI'' logo must appear on the front cover of a written product, or in the opening frames of a video product, unless another placement is approved in writing by the Institute. This includes final products printed or otherwise reproduced during the grant period, as well as reprintings or reproductions of those materials following the end of the grant period. A camera-ready logo sheet is available from the Institute upon request.

(2) Recipients also must display the following disclaimer on all grant products: ''This [document, film, videotape, etc.] was developed under [grant/cooperative agreement, number

SJI–(insert number)] from the State Justice Institute. The points of view expressed are those of the [author(s), filmmaker(s), etc.] and do not necessarily represent the official position or policies of the State Justice Institute.''

b. Charges for Grant-Related Products/Recovery of Costs. (1) When Institute funds fully cover the cost of developing, producing, and disseminating a product, (e.g., a report, curriculum, videotape or software), the product should be distributed to the field without charge. When Institute funds only partially cover the development, production, or dissemination costs, the grantee may, with the Institute's prior written approval, recover its costs for developing, producing, and disseminating the material to those requesting it, to the extent that those costs were not covered by Institute funds or grantee matching contributions.

(2) Applicants should disclose their intent to sell grant-related products in both the concept paper and the application. Grantees must obtain the written prior approval of the Institute of their plans to recover project costs through the sale of grant products. Written requests to recover costs ordinarily should be received during the grant period and should specify the nature and extent of the costs to be recouped, the reason that such costs were not budgeted (if the rationale was not disclosed in the approved application), the number of copies to be sold, the intended audience for the products to be sold, and the proposed sale price. If the product is to be sold for more than $25, the written request also should include a detailed itemization of costs that will be recovered and a certification that the costs were not supported by either Institute grant funds or grantee matching contributions.

(3) In the event that the sale of grant products results in revenues that exceed the costs to develop, produce, and disseminate the product, the revenue must continue to be used for the authorized purposes of the Institute-funded project or other purposes consistent with the State Justice Institute Act that have been approved by the Institute. See sections III.R. and X.G. for requirements regarding project-related income realized during the project period.

c. Copyrights. Except as otherwise provided in the terms and conditions of an Institute award, a recipient is free to copyright any books, publications, or other copyrightable materials developed in the course of an Institute-supported project, but the Institute shall reserve a royalty-free, nonexclusive and irrevocable right to reproduce, publish, or otherwise use, and to authorize others to use, the materials for purposes consistent with the State Justice Institute Act.

d. Distribution. In addition to the distribution specified in the grant application, grantees shall send:

(1) Seventeen (17) copies of each final product developed with grant funds to the Institute, unless the product was developed under either a curriculum adaptation or a technical assistance grant, in which case submission of 2 copies is required.

(2) A mastercopy of each videotape produced with grant funds to the Institute.

(3) One copy of each final product developed with grant funds to the library established in each State to collect materials prepared with Institute support. (A list of these libraries is contained in Appendix D. Labels for these libraries are available from the Institute upon request.) Recipients of curriculum adaptation and technical assistance grants are not required to submit final products to State libraries.

(4) A press release describing the project and announcing the results to a list of national and State judicial branch organizations provided by the Institute.

e. Institute Approval. No grant funds may be obligated for publication or reproduction of a final product developed with grant funds without the written approval of the Institute. Grantees shall submit a final draft of each written product to the Institute for review and approval. These drafts shall be submitted at least 30 days before the product is scheduled to be sent for publication or reproduction to permit Institute review and incorporation of any appropriate changes agreed upon by the grantee and the Institute. Grantees shall provide for timely reviews by the Institute of videotape or CD–ROM products at the treatment, script, rough cut, and final stages of development or their equivalents, prior to initiating the next stage of product development.

f. Original Material. All products prepared as the result of Institute-supported projects must be originally-developed material unless otherwise specified in the award documents. Material not originally developed that is included in such products must be properly identified, whether the material is in a verbatim or extensive paraphrase format.

11. Prohibition Against Litigation Support

No funds made available by the Institute may be used directly or indirectly to support legal assistance to parties in litigation, including cases involving capital punishment.

12. Reporting Requirements

a. Recipients of Institute funds other than Scholarships must submit Quarterly Progress and Financial Reports within 30 days of the close of each calendar quarter (that is, no later than January 30, April 30, July 30, and October 30). Two copies of each report must be sent. The Quarterly Progress Reports shall include a narrative description of project activities during the calendar quarter, the relationship between those activities and the task schedule and objectives set forth in the approved application or an approved adjustment thereto, any significant problem areas that have developed and how they will be resolved, and the activities scheduled during the next reporting period.

b. The quarterly financial status report must be submitted in accordance with section X.H.2. of this Guideline. A final project progress report and financial status report shall be submitted within 90 days after the end of the grant period in accordance with section X.L.2. of this Guideline.

13. Research

a. Availability of Research Data for Secondary Analysis. Upon request, grantees must make available for secondary analysis a diskette(s) or data tape(s) containing research and evaluation data collected under an Institute grant and the accompanying code manual. Grantees may recover the actual cost of duplicating and mailing or otherwise transmitting the data set and manual from the person or organization requesting the data. Grantees may provide the requested data set in the format in which it was created and analyzed.

b. Confidentiality of Information. Except as provided by Federal law other than the State Justice Institute Act, no recipient of financial assistance from SJI may use or reveal any research or statistical information furnished under the Act by any person and identifiable to any specific private person for any purpose other than the purpose for which the information was obtained. Such information and copies thereof shall be immune from legal process, and shall not, without the consent of the person furnishing such information, be admitted as evidence or used for any

purpose in any action, suit, or other judicial, legislative, or administrative proceedings.

c. Human Subject Protection. All research involving human subjects shall be conducted with the informed consent of those subjects and in a manner that will ensure their privacy and freedom from risk or harm and the protection of persons who are not subjects of the research but would be affected by it, unless such procedures and safeguards would make the research impractical. In such instances, the Institute must approve procedures designed by the grantee to provide human subjects with relevant information about the research after their involvement and to minimize or eliminate risk or harm to those subjects due to their participation.

14. State and Local Court Applications

Each application for funding from a State or local court must be approved, consistent with State law, by the State's Supreme Court, or its designated agency or council. The Supreme Court or its designee shall receive, administer, and be accountable for all funds awarded on the basis of such an application. 42 U.S.C. 10705(b)(4). Appendix C to this Guideline lists the person to contact in each State regarding the administration of Institute grants to State and local courts.

15. Supplantation and Construction

To ensure that funds are used to supplement and improve the operation of State courts, rather than to support basic court services, funds shall not be used for the following purposes:

a. To supplant State or local funds supporting a program or activity (such as paying the salary of court employees who would be performing their normal duties as part of the project, or paying rent for space which is part of the court's normal operations);

b. To construct court facilities or structures, except to remodel existing facilities or to demonstrate new architectural or technological techniques, or to provide temporary facilities for new personnel or for personnel involved in a demonstration or experimental program; or

c. Solely to purchase equipment.

16. Suspension of Funding

After providing a recipient reasonable notice and opportunity to submit written documentation demonstrating why fund termination or suspension should not occur, the Institute may terminate or suspend funding of a project that fails to comply substantially with the Act, the Guideline, or the terms and conditions of the award. 42 U.S.C. 10708(a).

17. Title to Property

At the conclusion of the project, title to all expendable and nonexpendable personal property purchased with Institute funds shall vest in the recipient court, organization, or individual that purchased the property if certification is made to and approved by the Institute that the property will continue to be used for the authorized purposes of the Institute-funded project or other purposes consistent with the State Justice Institute Act. If such certification is not made or the Institute disapproves such certification, title to all such property with an aggregate or individual value of $1,000 or more shall vest in the Institute, which will direct the disposition of the property.

B. Recipients of Curriculum Adaptation and Technical Assistance Grants

In addition to the compliance requirements in A. in this section, recipients of Curriculum Adaptation and Technical Assistance grants must comply with the following requirements.

1. Curriculum Adaptation Grantees

Recipients of Curriculum Adaptation grants must:

a. Comply with the same quarterly reporting requirements as other Institute grantees (see A.12. above in this section);

b. Include in each grant product a prominent acknowledgment that support was received from the Institute, along with the ''SJI'' logo and a disclaimer paragraph (see A.10.a. above in this section); and

c. Submit one copy of the manuals, handbooks, or conference packets developed under the grant at the conclusion of the grant period, along with a final report that includes any evaluation results and explains how the grantee intends to present the program in the future.

2. Technical Assistance Grantees

Recipients of Technical Assistance grants must:

a. Comply with the same quarterly reporting requirements as other Institute grantees (see A.12. above in this section);

b. Ensure that each technical assistance report prepared by a consultant includes a prominent acknowledgment that support was received from the Institute, along with the ''SJI'' logo and a disclaimer paragraph (see A.10.a. above in this section);

c. Submit to the Institute one copy of a final report that explains how it intends to act on the consultant's recommendations, as well as a copy of the consultant's written report; and

d. Complete a Technical Assistance Evaluation Form at the conclusion of the grant period.

C. Scholarship Recipients

1. Scholarship recipients are responsible for disseminating the information received from the course to their court colleagues locally, and if possible, throughout the State (e.g., by developing a formal seminar, circulating the written material, or discussing the information at a meeting or conference).

Recipients also must submit to the Institute a certificate of attendance at the program, an evaluation of the educational program they attended, and a copy of the notice of any scholarship funds received from other sources. A copy of the evaluation must be sent to the Chief Justice of their State. A State or local jurisdiction may impose additional requirements on scholarship recipients.

2. To receive the funds authorized by a scholarship award, recipients must submit a Scholarship Payment Voucher (Form S3) together with a tuition statement from the program sponsor, and a transportation fare receipt (or statement of the driving mileage to and from the recipient's home to the site of the educational program).

Scholarship Payment Vouchers should be submitted within 90 days after the end of the course which the recipient attended.

3. Scholarship recipients are encouraged to check with their tax advisors to determine whether the scholarship constitutes taxable income under Federal and State law.

X. Financial Requirements

A. Purpose

The purpose of this section is to establish accounting system requirements and offer guidance on procedures to assist all grantees, subgrantees, contractors, and other organizations in:

1. Complying with the statutory requirements for the award, disbursement, and accounting of funds;

2. Complying with regulatory requirements of the Institute for the financial management and disposition of funds;

3. Generating financial data to be used in planning, managing, and controlling projects; and

4. Facilitating an effective audit of funded programs and projects.

B. References

Except where inconsistent with specific provisions of this Guideline, the following regulations, directives and reports are applicable to Institute grants and cooperative agreements under the same terms and conditions that apply to Federal grantees. The following circulars supplement the requirements of this section for accounting systems and financial recordkeeping and provide additional guidance on how these requirements may be satisfied. (Circulars may be obtained from OMB by calling 202–395–3080 or visiting the OMB website at www.whitehouse.gov/OMB).

1. Office of Management and Budget (OMB) Circular A–21, Cost Principles for Educational Institutions.
2. Office of Management and Budget (OMB) Circular A–87, Cost Principles for State and Local Governments.
3. Office of Management and Budget (OMB) Circular A–88 (revised), Indirect Cost Rates, Audit and Audit Follow-up at Educational Institutions.
4. Office of Management and Budget (OMB) Circular A–102, Uniform Administrative Requirements for Grants-in-Aid to State and Local Governments.
5. Office of Management and Budget (OMB) Circular A–110, Grants and Agreements with Institutions of Higher Education, Hospitals and other Non-Profit Organizations.
6. Office of Management and Budget (OMB) Circular A–128, Audits of State and Local Governments.
7. Office of Management and Budget (OMB) Circular A–122, Cost Principles for Non-profit Organizations.
8. Office of Management and Budget (OMB) Circular A–133, Audits of Institutions of Higher Education and Other Non-profit Institutions.

C. Supervision and Monitoring Responsibilities

1. Grantee Responsibilities

All grantees receiving awards from the Institute are responsible for the management and fiscal control of all funds. Responsibilities include accounting for receipts and expenditures, maintaining adequate financial records, and refunding expenditures disallowed by audits.

2. Responsibilities of State Supreme Court a. Each application for funding from a State or local court must be approved, consistent with State law, by the State's Supreme Court, or its designated agency or council. (See III.H.)

b. The State Supreme Court or its designee shall receive all Institute funds awarded to such courts; be responsible for assuring proper administration of Institute funds; and be responsible for all aspects of the project, including proper accounting and financial recordkeeping by the subgrantee. These responsibilities include:

(1) Reviewing Financial Operations. The State Supreme Court or its designee should be familiar with, and periodically monitor, its subgrantees' financial operations, records system, and procedures. Particular attention should be directed to the maintenance of current financial data.

(2) Recording Financial Activities. The subgrantee's grant award or contract obligation, as well as cash advances and other financial activities, should be recorded in the financial records of the State Supreme Court or its designee in summary form. Subgrantee expenditures should be recorded on the books of the State Supreme Court OR evidenced by report forms duly filed by the subgrantee. Non-Institute contributions applied to projects by subgrantees should likewise be recorded, as should any project income resulting from program operations.

(3) Budgeting and Budget Review. The State Supreme Court or its designee should ensure that each subgrantee prepares an adequate budget as the basis for its award commitment. The detail of each project budget should be maintained on file by the State Supreme Court.

(4) Accounting for Non-Institute Contributions. The State Supreme Court or its designee will ensure, in those instances where subgrantees are required to furnish non-Institute matching funds, that the requirements and limitations of the SJI Grant Guideline are applied to such funds.

(5) Audit Requirement. The State Supreme Court or its designee is required to ensure that subgrantees have met the necessary audit requirements set forth by the Institute (see sections K. below and IX.C.)

(6) Reporting Irregularities. The State Supreme Court, its designees, and its subgrantees are responsible for promptly reporting to the Institute the nature and circumstances surrounding any financial irregularities discovered.

D. Accounting System

The grantee is responsible for establishing and maintaining an adequate system of accounting and internal controls for itself and for ensuring that an adequate system exists for each of its subgrantees and contractors. An acceptable and adequate accounting system:

1. Properly accounts for receipt of funds under each grant awarded and the expenditure of funds for each grant by category of expenditure (including matching contributions and project income);
2. Assures that expended funds are applied to the appropriate budget category included within the approved grant;
3. Presents and classifies historical costs of the grant as required for budgetary and evaluation purposes;
4. Provides cost and property controls to assure optimal use of grant funds;
5. Is integrated with a system of internal controls adequate to safeguard the funds and assets covered, check the accuracy and reliability of the accounting data, promote operational efficiency, and assure conformance with any general or special conditions of the grant;
6. Meets the prescribed requirements for periodic financial reporting of operations; and
7. Provides financial data for planning, control, measurement, and evaluation of direct and indirect costs.

E. Total Cost Budgeting and Accounting

Accounting for all funds awarded by the Institute must be structured and executed on a total project cost basis. That is, total project costs, including Institute funds, State and local matching shares, and any other fund sources included in the approved project budget serve as the foundation for fiscal administration and accounting. Grant applications and financial reports require budget and cost estimates on the basis of total costs.

1. Timing of Matching Contributions

Matching contributions need not be applied at the exact time of the obligation of Institute funds. Ordinarily, the full matching share must be obligated during the award period; however, with the prior written permission of the Institute, contributions made following approval of the grant by the Institute's Board of Directors but before the beginning of the grant may be counted as match. Grantees that do not contemplate making matching contributions continuously throughout the course of a project, or on a task-by-task basis, are required to submit a schedule within 30 days after the beginning of the project period indicating at what points during the project period the matching contributions will be made. If a proposed cash match is not fully met, the Institute may reduce the award amount accordingly to maintain the

ratio of grant funds to matching funds stated in the award agreement.

2. Records for Match

All grantees must maintain records which clearly show the source, amount, and timing of all matching contributions. In addition, if a project has included, within its approved budget, contributions which exceed the required matching portion, the grantee must maintain records of those contributions in the same manner as it does Institute funds and required matching shares. For all grants made to State and local courts, the State Supreme Court has primary responsibility for grantee/subgrantee compliance with the requirements of this section. (See C.2. above in this section.)

F. Maintenance and Retention of Records

All financial records, supporting documents, statistical records, and all other records pertinent to grants, subgrants, cooperative agreements, or contracts under grants must be retained by each organization participating in a project for at least three years for purposes of examination and audit. State Supreme Courts may impose record retention and maintenance requirements in addition to those prescribed in this section.

1. Coverage

The retention requirement extends to books of original entry, source documents supporting accounting transactions, the general ledger, subsidiary ledgers, personnel and payroll records, canceled checks, and related documents and records. Source documents include copies of all grant and subgrant awards, applications, and required grantee/subgrantee financial and narrative reports. Personnel and payroll records shall include the time and attendance reports for all individuals reimbursed under a grant, subgrant or contract, whether they are employed full-time or part-time. Time and effort reports will be required for consultants.

2. Retention Period

The three-year retention period starts from the date of the submission of the final expenditure report or, for grants which are renewed annually, from the date of submission of the annual expenditure report.

3. Maintenance

Grantees and subgrantees are expected to see that records of different fiscal years are separately identified and maintained so that requested information can be readily located. Grantees and subgrantees are also obligated to protect records adequately against fire or other damage. When records are stored away from the grantee's/subgrantee's principal office, a written index of the location of stored records should be on hand, and ready access should be assured.

4. Access

Grantees and subgrantees must give any authorized representative of the Institute access to and the right to examine all records, books, papers, and documents related to an Institute grant.

G. Project-Related Income

Records of the receipt and disposition of project-related income must be maintained by the grantee in the same manner as required for the project funds that gave rise to the income and must be reported to the Institute. (See H.2. below in this section) The policies governing the disposition of the various types of project-related income are listed below.

1. Interest

A State and any agency or instrumentality of a State, including institutions of higher education and hospitals, shall not be held accountable for interest earned on advances of project funds. When funds are awarded to subgrantees through a State, the subgrantees are not held accountable for interest earned on advances of project funds. Local units of government and nonprofit organizations that are grantees must refund any interest earned. Grantees shall ensure minimum balances in their respective grant cash accounts.

2. Royalties

The grantee/subgrantee may retain all royalties received from copyrights or other works developed under projects or from patents and inventions, unless the terms and conditions of the grant provide otherwise.

3. Registration and Tuition Fees

Registration and tuition fees shall be used to pay project-related costs not covered by the grant, or to reduce the amount of grant funds needed to support the project. Registration and tuition fees may be used for other purposes only with the prior written approval of the Institute. Estimates of registration and tuition fees, and any expenses to be offset by the fees, should be included in the application budget forms and narrative.

4. Income from the Sale of Grant Products

a. When grant funds fully cover the cost of producing and disseminating a limited number of copies of a product, the grantee may, with the written prior approval of the Institute, sell additional copies reproduced at its expense at a reasonable market price, as long as the income is applied to court improvement projects consistent with the State Justice Institute Act. When grant funds only partially cover the costs of developing, producing and disseminating a product, the grantee may, with the written prior approval of the Institute, recover costs for developing, reproducing, and disseminating the material to the extent that those costs were not covered by Institute grant funds or grantee matching contributions. If the grantee recovers its costs in this manner, then amounts expended by the grantee to develop, produce, and disseminate the material may not be considered match.

b. If the sale of products occurs during the project period, the costs and income generated by the sales must be reported on the Quarterly Financial Status Reports and documented in an auditable manner. Whenever possible, the intent to sell a product should be disclosed in the concept paper and application or reported to the Institute in writing once a decision to sell products has been made. The grantee must request approval to recover its product development, reproduction, and dissemination costs as specified in section X.A.10.b.

5. Other

Other project income shall be treated in accordance with disposition instructions set forth in the grant's terms and conditions.

H. Payments and Financial Reporting Requirements

1. Payment of Grant Funds

The procedures and regulations set forth below are applicable to all Institute grant funds and grantees.

a. Request for Advance or Reimbursement of Funds. Grantees will receive funds on a ''check-issued'' basis. Upon receipt, review, and approval of a Request for Advance or Reimbursement by the Institute, a check will be issued directly to the grantee or its designated fiscal agent. A request must be limited to the grantee's immediate cash needs. The Request for Advance or Reimbursement, along with the instructions for its preparation, will be included in the official Institute award package.

b. Continuation and On-Going Support Awards. For purposes of submitting Requests for Advance or Reimbursement, recipients of continuation and on-going support grants should treat each grant as a new project and number the requests accordingly (i.e., on a grant rather than a project basis). For example, the first request for payment from a continuation grant or each year of an on-going support would be number 1, the second number 2, etc. (See Appendix B, Questions Frequently Asked by Grantees, for further guidance.)

c. Termination of Advance and Reimbursement Funding. When a grantee organization receiving cash advances from the Institute:

(1) Demonstrates an unwillingness or inability to attain program or project goals, or to establish procedures that will minimize the time elapsing between cash advances and disbursements, or cannot adhere to guideline requirements or special conditions;

(2) Engages in the improper award and administration of subgrants or contracts; or

(3) Is unable to submit reliable and/or timely reports; the Institute may terminate advance financing and require the grantee organization to finance its operations with its own working capital. Payments to the grantee shall then be made by check to reimburse the grantee for actual cash disbursements. In the event the grantee continues to be deficient, the Institute may suspend reimbursement payments until the deficiencies are corrected.

d. Principle of Minimum Cash on Hand. Grantees should request funds based upon immediate disbursement requirements. Grantees should time their requests to ensure that cash on hand is the minimum needed for disbursements to be made immediately or within a few days. Idle funds in the hands of subgrantees impair the goals of good cash management.

2. Financial Reporting

a. General Requirements. To obtain financial information concerning the use of funds, the Institute requires that grantees/subgrantees submit timely reports for review.

b. Two copies of the Financial Status Report are required from all grantees, other than scholarship recipients, for each active quarter on a calendar-quarter basis. This report is due within 30 days after the close of the calendar quarter. It is designed to provide financial information relating to Institute funds, State and local matching shares, project income, and any other sources of funds for the project, as well as information on obligations and outlays. A copy of the Financial Status Report, along with instructions for its preparation, is included in each official Institute Award package. If a grantee requests substantial payments for a project prior to the completion of a given quarter, the Institute may request a brief summary of the amount requested, by object class, to support the Request for Advance or Reimbursement.

c. Additional Requirements for Continuation and On-going Support Grants. Grantees receiving continuation or on-going support grants should number their quarterly Financial Status Reports on a grant rather than a project basis. For example, the first quarterly report for a continuation grant or each year of an on-going support award should be number 1, the second number 2, etc.

3. Consequences of Non-Compliance with Submission Requirement

Failure of the grantee to submit required financial and progress reports may result in suspension or termination of grant payments.

I. Allowability of Costs

1. General

Except as may be otherwise provided in the conditions of a particular grant, cost allowability is determined in accordance with the principles set forth in *OMB Circular A–87,* Cost Principles for State and Local Governments; *A–21,* Cost Principles Applicable to Grants and Contracts with Educational Institutions; and *A–122,* Cost Principles for Non-Profit Organizations. No costs may be recovered to liquidate obligations incurred after the approved grant period. Circulars may be obtained from OMB by calling 202–395–3080 or visiting the OMB website at www.whitehouse.gov/OMB.

2. Costs Requiring Prior Approval

a. Pre-agreement Costs. The written prior approval of the Institute is required for costs considered necessary to the project but which occur prior to the award date of the grant.

b. Equipment. Grant funds may be used to purchase or lease only that equipment essential to accomplishing the goals and objectives of the project. The written prior approval of the Institute is required when the amount of automated data processing (ADP) equipment to be purchased or leased exceeds $10,000 or software to be purchased exceeds $3,000.

c. Consultants. The written prior approval of the Institute is required when the rate of compensation to be paid a consultant exceeds $300 a day. Institute funds may not be used to pay a consultant more than $900 per day.

3. Travel Costs

Transportation and per diem rates must comply with the policies of the grantee. If the grantee does not have an established written travel policy, then travel rates must be consistent with those established by the Institute or the Federal Government. Institute funds may not be used to cover the transportation or per diem costs of a member of a national organization to attend an annual or other regular meeting of that organization.

4. Indirect Costs

These are costs of an organization that are not readily assignable to a particular project but are necessary to the operation of the organization and the performance of the project. The cost of operating and maintaining facilities, depreciation, and administrative salaries are examples of the types of costs that are usually treated as indirect costs. The Institute's policy requires all costs to be budgeted directly; however, if a grantee has an indirect cost rate approved by a Federal agency as set forth below, the Institute will accept that rate.

a. Approved Plan Available. (1) The Institute will accept an indirect cost rate or allocation plan approved for a grantee during the preceding two years by any Federal granting agency on the basis of allocation methods substantially in accord with those set forth in the applicable cost circulars. A copy of the approved rate agreement must be submitted to the Institute.

(2) Where flat rates are accepted in lieu of actual indirect costs, grantees may not also charge expenses normally included in overhead pools, *e.g.,* accounting services, legal services, building occupancy and maintenance, *etc.,* as direct costs.

(3) When utilizing total direct costs as the base, organizations with approved indirect cost rates usually exclude contracts under grants from any overhead recovery. The negotiated agreement will stipulate that contracts are excluded from the base for overhead recovery.

b. Establishment of Indirect Cost Rates. To be reimbursed for indirect costs, a grantee must first establish an appropriate indirect cost rate. To do this, the grantee must prepare an indirect cost rate proposal and submit it to the Institute within three months after the start of the grant period to assure recovery of the full amount of

allowable indirect costs. The rate must be developed in accordance with principles and procedures appropriate to the type of grantee institution involved as specified in the applicable OMB Circular.

c. No Approved Plan. If an indirect cost proposal for recovery of actual indirect costs is not submitted to the Institute within three months after the start of the grant period, indirect costs will be irrevocably disallowed for all months prior to the month that the indirect cost proposal is received.

J. Procurement and Property Management Standards

1. Procurement Standards

For State and local governments, the Institute has adopted the standards set forth in Attachment O of *OMB Circular A–102.* Institutions of higher education, hospitals; other non-profit organizations will be governed by the standards set forth in Attachment O of *OMB Circular A–110.*

2. Property Management Standards

The property management standards as prescribed in Attachment N of *OMB Circulars A–102* and *A–110* apply to all Institute grantees and subgrantees except as provided in section IX.A.17. All grantees/subgrantees are required to be prudent in the acquisition and management of property with grant funds. If suitable property required for the successful execution of projects is already available within the grantee or subgrantee organization, expenditures of grant funds for the acquisition of new property will be considered unnecessary.

K. Audit Requirements

1. Implementation

Each recipient of a grant from the Institute other than a scholarship, curriculum adaptation, or technical assistance grant must provide for an annual fiscal audit. This requirement also applies to a State or local court receiving a subgrant from the State Supreme Court). The audit may be of the entire grantee or subgrantee organization or of the specific project funded by the Institute. Audits conducted in accordance with the Single Audit Act of 1984 and *OMB Circular A–128,* or *OMB Circular A–133* will satisfy the requirement for an annual fiscal audit. The audit must be conducted by an independent Certified Public Accountant, or a State or local agency authorized to audit government agencies. Grantees must send two copies of the audit report to the Institute. Grantees that receive funds from a Federal agency and satisfy audit requirements of the cognizant Federal agency must submit two copies of the audit report prepared for that Federal agency to the Institute in order to satisfy the provisions of this section. Cognizant Federal agencies do not send reports to the Institute. Therefore, each grantee must send copies of this report directly to the Institute.

2. Resolution and Clearance of Audit Reports

Timely action on recommendations by responsible management officials is an integral part of the effectiveness of an audit. Each grantee must have policies and procedures for acting on audit recommendations by designating officials responsible for: Follow-up; maintaining a record of the actions taken on recommendations and time schedules; responding to and acting on audit recommendations; and submitting periodic reports to the Institute on recommendations and actions taken.

3. Consequences of Non-Resolution of Audit Issues

Ordinarily, the Institute will not make a new grant award to an applicant that has an unresolved audit report involving Institute awards. Failure of the grantee to resolve audit questions may also result in the suspension or termination of payments for active Institute grants to that organization.

L. Close-Out of Grants

1. Grantee Close-Out Requirements

Within 90 days after the end date of the grant or any approved extension thereof (*see* L.3. below in this section), the following documents must be submitted to the Institute by grantees (other than scholarship recipients):

a. Financial Status Report. The final report of expenditures must have no unliquidated obligations and must indicate the exact balance of unobligated funds. Any unobligated/unexpended funds will be deobligated from the award by the Institute. Final payment requests for obligations incurred during the award period must be submitted to the Institute prior to the end of the 90-day close-out period. Grantees on a check-issued basis, who have drawn down funds in excess of their obligations/expenditures, must return any unused funds as soon as it is determined that the funds are not required. In no case should any unused funds remain with the grantee beyond the submission date of the final financial status report.

b. Final Progress Report. This report should describe the project activities during the final calendar quarter of the project and the close-out period, including to whom project products have been disseminated; provide a summary of activities during the entire project; specify whether all the objectives set forth in the approved application or an approved adjustment have been met and, if any of the objectives have not been met, explain why not; and discuss what, if anything, could have been done differently that might have enhanced the impact of the project or improved its operation.

These reporting requirements apply at the conclusion of any non-scholarship grant, even when the project will continue under a continuation or on-going support grant.

2. Extension of Close-out Period

Upon the written request of the grantee, the Institute may extend the close-out period to assure completion of the Grantee's close-out requirements. Requests for an extension must be submitted at least 14 days before the end of the close-out period and must explain why the extension is necessary and what steps will be taken to assure that all the grantee's responsibilities will be met by the end of the extension period.

XI. Grant Adjustments

All requests for programmatic or budgetary adjustments requiring Institute approval must be submitted in a timely manner by the project director. All requests for changes from the approved application will be carefully reviewed for both consistency with this Guideline and the enhancement of grant goals and objectives.

A. Grant Adjustments Requiring Prior Written Approval

There are several types of grant adjustments that require the prior written approval of the Institute. Examples of these adjustments include:

1. Budget revisions among direct cost categories that individually or in the aggregate exceed five percent of the approved original budget or the most recently approved revised budget. The Institute will view budget revisions cumulatively.

For continuation and on-going support grants, funds from the original award may be used during the new grant period and funds awarded through a continuation or on-going support grant may be used to cover project-related expenditures incurred during the original award period, with the prior written approval of the Institute.

2. A change in the scope of work to be performed or the objectives of the project (see D. below in this section).
3. A change in the project site.
4. A change in the project period, such as an extension of the grant period and/or extension of the final financial or progress report deadline (see E. below).
5. Satisfaction of special conditions, if required.
6. A change in or temporary absence of the project director (see F. and G. below).
7. The assignment of an employee or consultant to a key staff position whose qualifications were not described in the application, or a change of a person assigned to a key project staff position (see section IX.A.2.).
8. A change in or temporary absence of the person responsible for the financial management and financial reporting for the grant.
9. A change in the name of the grantee organization.
10. A transfer or contracting out of grant-supported activities (see H. below).
11. A transfer of the grant to another recipient.
12. Preagreement costs (see section X.I.2.a.).
13. The purchase of automated data processing equipment and software (see section X.I.2.b.)
14. Consultant rates (see section X.I.2.c.).
15. A change in the nature or number of the products to be prepared or the manner in which a product would be distributed.

B. Requests for Grant Adjustments

All grantees and subgrantees must promptly notify their SJI program managers, in writing, of events or proposed changes that may require adjustments to the approved project design. In requesting an adjustment, the grantee must set forth the reasons and basis for the proposed adjustment and any other information the program manager determines would help the Institute's review.

C. Notification of Approval/Disapproval

If the request is approved, the grantee will be sent a Grant Adjustment signed by the Executive Director or his designee. If the request is denied, the grantee will be sent a written explanation of the reasons for the denial.

D. Changes in the Scope of the Grant

Major changes in scope, duration, training methodology, or other significant areas must be approved in advance by the Institute. A grantee may make minor changes in methodology, approach, or other aspects of the grant to expedite achievement of the grant's objectives with subsequent notification of the SJI program manager.

E. Date Changes

A request to change or extend the grant period must be made at least 30 days in advance of the end date of the grant. A revised task plan should accompany a request for a no-cost extension of the grant period, along with a revised budget if shifts among budget categories will be needed. A request to change or extend the deadline for the final financial report or final progress report must be made at least 14 days in advance of the report deadline (see section X.L.3.).

F. Temporary Absence of the Project Director

Whenever an absence of the project director is expected to exceed a continuous period of one month, the plans for the conduct of the project director's duties during such absence must be approved in advance by the Institute. This information must be provided in a letter signed by an authorized representative of the grantee/subgrantee at least 30 days before the departure of the project director, or as soon as it is known that the project director will be absent. The grant may be terminated if arrangements are not approved in advance by the Institute.

G. Withdrawal of/Change in Project Director

If the project director relinquishes or expects to relinquish active direction of the project, the Institute must be notified immediately. In such cases, if the grantee/subgrantee wishes to terminate the project, the Institute will forward procedural instructions upon notification of such intent. If the grantee wishes to continue the project under the direction of another individual, a statement of the candidate's qualifications should be sent to the Institute for review and approval. The grant may be terminated if the qualifications of the proposed individual are not approved in advance by the Institute.

H. Transferring or Contracting Out of Grant-Supported Activities

No principal activity of a grant-supported project may be transferred or contracted out to another organization without specific prior approval by the Institute. All such arrangements must be formalized in a contract or other written agreement between the parties involved. Copies of the proposed contract or agreement must be submitted for prior approval of the Institute at the earliest possible time. The contract or agreement must state, at a minimum, the activities to be performed, the time schedule, the policies and procedures to be followed, the dollar limitation of the agreement, and the cost principles to be followed in determining what costs, both direct and indirect, will be allowed. The contract or other written agreement must not affect the grantee's overall responsibility for the direction of the project and accountability to the Institute.

State Justice Institute Board of Directors

Robert A. Miller, Chairman, Chief Justice, Supreme Court of South Dakota, Pierre, SD
Joseph F. Baca, Vice-Chairman, Justice, New Mexico Supreme Court, Santa Fe, NM
Sandra A. O'Connor, Secretary, States Attorney of Baltimore County, Towson, MD
Terrence B. Adamson, Esq., Executive Committee Member, Senior Vice-President, The National Geographic Society, Washington, D.C
Mr. Robert N. Baldwin, State Court Administrator, Supreme Court of Virginia, Richmond, VA
Carlos R. Garza, Esq., Administrative Judge (ret.), Vienna, VA
Sophia H. Hall, Presiding Judge, Juvenile Court, Circuit Court of Cook County, Chicago, IL
Tommy Jewell, District Judge, Albuquerque, NM
Arthur A. McGiverin, Chief Justice, Supreme Court of Iowa, Des Moines, IA
Keith McNamara, Esq., McNamara & McNamara, Columbus, OH
Florence K. Murray, Justice (ret.), Supreme Court of Rhode Island, Providence, RI
David I. Tevelin, Executive Director (ex officio)

David I. Tevelin,

Executive Director.

Appendix A—Recommendations to Grant Writers

Over the past 13 years, Institute staff have reviewed approximately 3,600 concept papers and 1,700 applications. On the basis of those reviews, inquiries from applicants, and the views of the Board, the Institute offers the following recommendations to help potential applicants present workable, understandable proposals that can meet the funding criteria set forth in this Guideline.

The Institute suggests that applicants make certain that they address the questions and issues set forth below when preparing a concept paper or application. Concept papers and applications should, however, be presented in the formats specified in sections VI. and VII. of the Guideline, respectively.

1. What is the subject or problem you wish to address?

Describe the subject or problem and how it affects the courts and the public. Discuss how your approach will improve the situation or advance the state of the art or

knowledge, and explain why it is the most appropriate approach to take. When statistics or research findings are cited to support a statement or position, the source of the citation should be referenced in a footnote or a reference list.

2. What do you want to do?

Explain the goal(s) of the project in simple, straightforward terms. The goals should describe the intended consequences or expected overall effect of the proposed project (e.g., to enable judges to sentence drug-abusing offenders more effectively, or to dispose of civil cases within 24 months), rather than the tasks or activities to be conducted (e.g., hold three training sessions, or install a new computer system).

To the greatest extent possible, an applicant should avoid a specialized vocabulary that is not readily understood by the general public. Technical jargon does not enhance a paper, nor does a clever but uninformative title.

3. How will you do it?

Describe the methodology carefully so that what you propose to do and how you would do it are clear. All proposed tasks should be set forth so that a reviewer can see a logical progression of tasks, and relate those tasks directly to the accomplishment of the project's goal(s). When in doubt about whether to provide a more detailed explanation or to assume a particular level of knowledge or expertise on the part of the reviewers, provide the additional information. A description of project tasks also will help identify necessary budget items. All staff positions and project costs should relate directly to the tasks described. The Institute encourages applicants to attach letters of cooperation and support from the courts and related agencies that will be involved in or directly affected by the proposed project.

4. How will you know it works?

Include an evaluation component that will determine whether the proposed training, procedure, service, or technology accomplished the objectives it was designed to meet. Concept papers and applications should present the criteria that will be used to evaluate the project's effectiveness; identify program elements which will require further modification; and describe how the evaluation will be conducted, when it will occur during the project period, who will conduct it, and what specific measures will be used. In most instances, the evaluation should be conducted by persons not connected with the implementation of the procedure, training, service, or technique, or the administration of the project.

The Institute has also prepared a more thorough list of recommendations to grant writers regarding the development of project evaluation plans. Those recommendations are available from the Institute upon request.

5. How will others find out about it?

Include a plan to disseminate the results of the training, research, or demonstration beyond the jurisdictions and individuals directly affected by the project. The plan should identify the specific methods which will be used to inform the field about the project, such as the publication of law review or journal articles, or the distribution of key materials. A statement that a report or research findings ''will be made available to'' the field is not sufficient. The specific means of distribution or dissemination as well as the types of recipients should be identified. Reproduction and dissemination costs are allowable budget items.

6. What are the specific costs involved?

The budget in both concept papers and applications should be presented clearly. Major budget categories such as personnel, benefits, travel, supplies, equipment, and indirect costs should be identified separately. The components of ''Other'' or ''Miscellaneous'' items should be specified in the application budget narrative, and should not include set-asides for undefined contingencies.

7. What, if any, match is being offered?

Courts and other units of State and local government (not including publicly-supported institutions of higher education) are required by the State Justice Institute Act to contribute a match (cash, non-cash, or both) of at least 50 percent of the grant funds requested from the Institute. All other applicants also are encouraged to provide a matching contribution to assist in meeting the costs of a project.

The match requirement works as follows: If, for example, the total cost of a project is anticipated to be $150,000, a State or local court or executive branch agency may request up to $100,000 from the Institute to implement the project. The remaining $50,000 (50% of the $100,000 requested from SJI) must be provided as match.

Cash match includes funds directly contributed to the project by the applicant, or by other public or private sources. It does not include income generated from tuition fees or the sale of project products. Non-cash match refers to in-kind contributions by the applicant, or other public or private sources. This includes, for example, the monetary value of time contributed by existing personnel or members of an advisory committee (but not the time spent by participants in an educational program attending program sessions). When match is offered, the nature of the match (cash or in-kind) should be explained and, at the application stage, the tasks and line items for which costs will be covered wholly or in part by match should be specified.

8. Which of the two budget forms should be used?

Section VII.A.1.c. of the SJI Grant Guideline encourages use of the spreadsheet format of Form C1 if the application requests $100,000 or more. Form C1 also works well for projects with discrete tasks, regardless of the dollar value of the project. Form C, the tabular format, is preferred for projects lacking a number of discrete tasks, or for projects requiring less than $100,000 of Institute funding. Generally, use the form that best lends itself to representing most accurately the budget estimates for the project.

9. How much detail should be included in the budget narrative?

The budget narrative of an application should provide the basis for computing all project-related costs, as indicated in section VII.A.4. of the Guideline. To avoid common shortcomings of application budget narratives, applicants should include the following information:

Personnel estimates that accurately provide the amount of time to be spent by personnel involved with the project and the total associated costs, including current salaries for the designated personnel (e.g., Project Director, 50% for one year, annual salary of $50,000 = $25,000). If salary costs are computed using an hourly or daily rate, the annual salary and number of hours or days in a work-year should be shown.

Estimates for supplies and expenses supported by a complete description of the supplies to be used, the nature and extent of printing to be done, anticipated telephone charges, and other common expenditures, with the basis for computing the estimates included (*e.g.*, 100 reports × 75 pages each × .05/page = $375.00). Supply and expense estimates offered simply as ''based on experience'' are not sufficient.

In order to expedite Institute review of the budget, make a final comparison of the amounts listed in the budget narrative with those listed on the budget form. In the rush to complete all parts of the application on time, there may be many last-minute changes; unfortunately, when there are discrepancies between the budget narrative and the budget form or the amount listed on the application cover sheet, it is not possible for the Institute to verify the amount of the request. A final check of the numbers on the form against those in the narrative will preclude such confusion.

10. What travel regulations apply to the budget estimates?

Transportation costs and per diem rates must comply with the policies of the applicant organization, and a copy of the applicant's travel policy should be submitted as an appendix to the application. If the applicant does not have a travel policy established in writing, then travel rates must be consistent with those established by the Institute or the Federal Government (a copy of the Institute's travel policy is available upon request). The budget narrative should state which policies apply to the project.

The budget narrative also should include the estimated fare, the number of persons traveling, the number of trips to be taken, and the length of stay. The estimated costs of travel, lodging, ground transportation, and other subsistence should be listed and explained separately. It is preferable for the budget to be based on the actual costs of traveling to and from the project or meeting sites. If the points of origin or destination are not known at the time the budget is prepared, an average airfare may be used to estimate the travel costs. For example, if it is anticipated that a project advisory committee will include members from around the country, a reasonable airfare from a central point to the meeting site, or the average of airfares from each coast to the meeting site

may be used. Applicants should arrange travel so as to be able to take advantage of advance-purchase price discounts whenever possible.

11. May grant funds be used to purchase equipment?

Generally, grant funds may be used to purchase only the equipment that is necessary to demonstrate a new technological application in a court, or that is otherwise essential to accomplishing the objectives of the project. The budget narrative must list the equipment to be purchased and explain why the equipment is necessary to the success of the project. Written prior approval is required when the amount of computer hardware to be purchased or leased exceeds $10,000, or the software to be purchased exceeds $3000.

12. To what extent may indirect costs be included in the budget estimates?

It is the policy of the Institute that all costs should be budgeted directly; however, if an indirect cost rate has been approved by a Federal agency within the last two years, an indirect cost recovery estimate may be included in the budget. A copy of the approved rate agreement should be submitted as an appendix to the application.

If an applicant does not have an approved rate agreement and cannot budget directly for all costs, an indirect cost rate proposal should be prepared in accordance with Section X.I.4. of the Guideline, based on the applicant's audited financial statements for the prior fiscal year. (Applicants lacking an audit should budget all project costs directly.)

13. What meeting costs may be covered with grant funds?

SJI grant funds may cover the reasonable cost of meeting rooms, necessary audio-visual equipment, meeting supplies, and working meals.

14. Does the budget truly reflect all costs required to complete the project?

After preparing the program narrative portion of the application, applicants may find it helpful to list all the major tasks or activities required by the proposed project, including the preparation of products, and note the individual expenses, including personnel time, related to each. This will help to ensure that, for all tasks described in the application (e.g., development of a videotape, research site visits, distribution of a final report), the related costs appear in the budget and are explained correctly in the budget narrative.

Appendix B—Questions Frequently Asked by Grantees

The Institute's staff works with grantees to help assure the smooth operation of the project and compliance with the Guideline. On the basis of monitoring more than 1,000 grants, the Institute staff offers the following suggestions to aid grantees in meeting the administrative and substantive requirements of their grants.

1. After the grant has been awarded, when are the first quarterly reports due?

Quarterly Progress Reports and Financial Status Reports must be submitted within 30 days after the end of every calendar quarter—*i.e.*, no later than January 30, April 30, July 30, and October 30—regardless of the project's start date. The reporting periods covered by each quarterly report end 30 days before the respective deadline for the report. When an award period begins December 1, for example, the first Quarterly Progress Report describing project activities between December 1 and December 31 will be due on January 30. A Financial Status Report should be submitted even if funds have not been obligated or expended.

By documenting what has happened over the past three months, Quarterly Progress Reports provide an opportunity for project staff and Institute staff to resolve any questions before they become problems, and make any necessary changes in the project time schedule, budget allocations, etc. The Quarterly Project Report should describe project activities, their relationship to the approved timeline, and any problems encountered and how they were resolved, and outline the tasks scheduled for the coming quarter. It is helpful to attach copies of relevant memos, draft products, or other requested information. An original and one copy of a Quarterly Progress Report and attachments should be submitted to the Institute.

Additional Quarterly Progress Report or Financial Status Report forms may be obtained from the grantee's Program Manager at SJI, or photocopies may be made from the supply received with the award.

2. Do reporting requirements differ for continuation and on-going support grants?

Recipients of continuation or on-going support grants are required to submit quarterly progress and financial status reports on the same schedule and with the same information as recipients of a grant for a single new project.

A continuation grant and each yearly grant under an on-going support award should be considered as a separate phase of the project. The reports should be numbered on a grant rather than project basis. Thus, the first quarterly report filed under a continuation grant or a yearly increment of an on-going support award should be designated as number one, the second as number two, and so on, through the final progress and financial status reports due within 90 days after the end of the grant period.

3. What information about project activities should be communicated to SJI?

In general, grantees should provide prior notice of critical project events such as advisory board meetings or training sessions so that the Institute Program Manager can attend if possible. If methodological, schedule, staff, budget allocations, or other significant changes become necessary, the grantee should contact the Program Manager prior to implementing any of these changes, so that possible questions may be addressed in advance. Questions concerning the financial requirements section of the Guideline, quarterly financial reporting, or payment requests, should be addressed to the Grants Financial Manager listed in the award letter.

It is helpful to include the grant number assigned to the award on all correspondence to the Institute.

4. Why are special conditions attached to the award document?

In some instances, a list of special conditions is attached to the award document. Special conditions may be imposed to establish a schedule for reporting certain key information, assure that the Institute has an opportunity to offer suggestions at critical stages of the project, and provide reminders of some (but not necessarily all) of the requirements contained in the Grant Guideline. Accordingly, it is important for grantees to check the special conditions carefully and discuss with their Program Managers any questions or problems they may have with the conditions. Most concerns about timing, response time, and the level of detail required can be resolved in advance through a telephone conversation. The Institute's primary concern is to work with grantees to assure that their projects accomplish their objectives, not to enforce rigid bureaucratic requirements. However, if a grantee fails to comply with a special condition or with other grant requirements, the Institute may, after proper notice, suspend payment of grant funds or terminate the grant.

Sections IX., X., and XI. of the Grant Guideline contain the Institute's administrative and financial requirements. Institute Finance Division staff are always available to answer questions and provide assistance regarding these provisions.

5. What is a Grant Adjustment?

A Grant Adjustment is the Institute's form for acknowledging the satisfaction of special conditions, or approving changes in grant activities, schedule, staffing, sites, or budget allocations requested by the project director. It also may be used to correct errors in grant documents or deobligate funds from the grant.

6. What schedule should be followed in submitting requests for reimbursements or advance payments?

Requests for reimbursements or advance payments may be made at any time after the project start date and before the end of the 90-day close-out period. However, the Institute follows the U.S. Treasury's policy limiting advances to the minimum amount required to meet immediate cash needs. Given normal processing time, grantees should not seek to draw down funds for periods greater than 30 days from the date of the request.

7. Do procedures for submitting requests for reimbursement or advance payment differ for continuation or on-going support grants?

The basic procedures are the same for any grant. A continuation grant or the yearly grant under an on-going support award should be considered as a separate phase of the project. Payment requests should be numbered on a grant rather than a project

basis. The first request for funds from a continuation grant or a yearly increment under an on-going support award should be designated as number one, the second as number two, and so on through the final payment request for that grant.

8. If things change during the grant period, can funds be reallocated from one budget category to another?

The Institute recognizes that some flexibility is required in implementing a project design and budget. Thus, grantees may shift funds among direct cost budget categories. When any one reallocation or the cumulative total of reallocations are expected to exceed five percent of the approved project budget, a grantee must specify the proposed changes, explain the reasons for the changes, and request Institute approval.

The same standard applies to continuation and on-going support grants. In addition, prior written Institute approval is required to shift leftover funds from the original award to cover activities to be conducted under the renewal award, or to use renewal grant monies to cover costs incurred during the original grant period.

9. What is the 90-day close-out period?

Following the last day of the grant, a 90-day period is provided to allow for all grant-related bills to be received and posted, and grant funds drawn down to cover these expenses. No obligations of grant funds may be incurred during this period. The last day on which an expenditure of grant funds can be obligated is the end date of the grant period. Similarly, the 90-day period is not intended as an opportunity to finish and disseminate grant products. This should occur before the end of the grant period.

During the 90 days following the end of the award period, all monies that have been obligated should be expended. All payment requests must be received by the end of the 90-day ''close-out-period.'' Any unexpended monies held by the grantee that remain after the 90-day follow-up period must be returned to the Institute. Any funds remaining in the grant that have not been drawn down by the grantee will be deobligated.

10. Are funds granted by SJI ''Federal'' funds?

The State Justice Institute Act provides that, except for purposes unrelated to this question, ''the Institute shall not be considered a department, agency, or instrumentality of the Federal Government.'' 42 U.S.C. 10704(c)(1). Because SJI receives appropriations from Congress, some grantee auditors have reported SJI grants funds as ''Other Federal Assistance.'' This classification is acceptable to SJI but is not required.

11. If SJI is not a Federal Agency, do OMB circulars apply with respect to audits?

Unless they are inconsistent with the express provisions of the SJI Grant Guideline, Office of Management and Budget (OMB) Circulars A–110, A–21, A–87, A–88, A–102, A–122, A–128 and A–133 are incorporated into the Grant Guideline by reference. Because the Institute's enabling legislation specifically requires the Institute to ''conduct, or require each recipient to provide for, an annual fiscal audit'' (see 42 U.S.C. 10711(c)(1)), the Grant Guideline sets forth options for grantees to comply with this statutory requirement. (See Section X.K.)

SJI will accept audits conducted in accordance with the Single Audit Act of 1984 and OMB Circulars A–128, or A–133, in satisfaction of the annual fiscal audit requirement. Grantees that are required to undertake these audits in conjunction with Federal grants may include SJI funds as part of the audit even if the receipt of SJI funds would not require such audits. This approach gives grantees an option to fold SJI funds into the governmental audit rather than to undertake a separate audit to satisfy SJI's Guideline requirements.

In sum, educational and nonprofit organizations that receive payments from the Institute that are sufficient to meet the applicability thresholds of OMB Circular A–133 must have their annual audit conducted in accordance with Government Auditing Standards issued by the Comptroller General of the United States rather than with generally accepted auditing standards. Grantees in this category that receive amounts below the minimum threshold referenced in Circular A–133 must also submit an annual audit to SJI, but they would have the option to conduct an audit of the entire grantee organization in accordance with generally accepted auditing standards; include SJI funds in an audit of Federal funds conducted in accordance with the Single Audit Act of 1984 and OMB Circulars A–128 or A–133; or conduct an audit of only the SJI funds in accordance with generally accepted auditing standards. (See Guideline Section X.K.) Circulars may be obtained from OMB by calling 202–395–3080 or visiting the OMB website at www.whitehouse.gov/OMB.

12. Does SJI have a CFDA number?

Auditors often request that a grantee provide the Institute's Catalog of Federal Domestic Assistance (CFDA) number for guidance in conducting an audit in accordance with Government Accounting Standards.

Because SJI is not a Federal agency, it has not been issued such a number, and there are no additional compliance tests to satisfy under the Institute's audit requirements beyond those of a standard governmental audit.

Moreover, because SJI is not a Federal agency, SJI funds should not be aggregated with Federal funds to determine if the applicability threshold of Circular A–133 has been reached. For example, if in fiscal year 1997 grantee ''X'' received $10,000 in Federal funds from a Department of Justice (DOJ) grant program and $20,000 in grant funds from SJI, the minimum A–133 threshold would not be met. The same distinction would preclude an auditor from considering the additional SJI funds in determining what Federal requirements apply to the DOJ funds.

Grantees who are required to satisfy either the Single Audit Act, OMB Circulars A–128, or A–133 and who include SJI grant funds in those audits, need to remember that because of its status as a private non-profit corporation, SJI is not on routing lists of cognizant Federal agencies. Therefore, the grantee needs to submit a copy of the audit report prepared for such a cognizant Federal agency directly to SJI. The Institute's audit requirements may be found in Section X.K. of the Grant Guideline.

Appendix C—List of State Contacts Regarding Administration of Institute Grants to State and Local Courts

Mr. Frank Gregory, Administrative Director, Administrative Office of the Courts, 300 Dexter Avenue, Montgomery, AL 36104, (334) 242–0300

Ms. Stephanie J. Cole, Administrative Director, Alaska Court System, 303 K Street, Anchorage, AK 99501, (907) 264–0547

Mr. Eliu F. Paopao, Court Administrator, High Court of American Samoa, PO Box 309, Pago Pago, 011 (684) 633–1150

Mr. David K. Byers, Administrative Director of the Courts, Supreme Court of Arizona, 1501 West Washington Street, Suite 411, Phoenix, AZ 85007, (602) 542–9301

Mr. James D. Gingerich, Director, Administrative Office of the Courts, Supreme Court of Arkansas, Justice Building, Little Rock, AR 72201, (501) 682–9400

Mr. William C. Vickrey, State Court Administrator, Administrative Office of the Courts, 455 Golden Gate Avenue, Suite 5622, San Francisco, CA 94107, (415) 865–4200

Mr. Steven V. Berson, State Court Administrator, Colorado Judicial Department, 1301 Pennsylvania Street, Suite 300, Denver, CO 80203–5012, (303) 861–1111

Honorable Robert C. Leuba, Chief Court Administrator, Supreme Court of Connecticut, 231 Capitol Avenue, Drawer N, Station A, Hartford, CT 06106, (860) 566–4461

Mr. Lawrence P. Webster, Director, Administrative Office of the Courts, Carvel State Office Building, 11th Floor, 820 N. French Street, Wilmington, DE 19801, (302) 577–8481

Mr. Ulysses Hammond, Executive Officer, District of Columbia Courts, 500 Indiana Avenue, NW, Washington, DC 20001, (202) 879–1700

Mr. Kenneth Palmer, State Courts Administrator, Supreme Court Building, 500 South Duval Street, Tallahassee, FL 32399–0156, (850) 922–5081

Mr. George Lange III, Director, Administrative Office of the Courts, 47 Trinity Avenue, Suite 414, Atlanta, GA 30334, (404) 656–5171

Mr. Daniel J. Tydingco, Executive Officer, Supreme Court of Guam, Guam Judicial Center, 120 West O'Brien Drive, Agana, Guam 96910, 011 (671) 475–3278

Mr. Michael F. Broderick, Administrative Director of the Courts, The Judiciary, State of Hawaii, 417 S. King Street, Room 206, Honolulu, HI 96813, (808) 539–4900

Ms. Patricia Tobias, Administrative Director of the Courts, Supreme Court Building, 451 West State Street, Boise, ID 83702, (208) 334–2246

Mr. Joseph A. Schillaci, Director, Administrative Office of the Illinois Courts, 222 N. LaSalle Street, 13th Floor, Chicago, IL 60601, (312) 793–3250

Ms. Lilia G. Judson, Executive Director, Division of State Court Administration, Indiana Supreme Court, 115 W. Washington, Suite 1080, Indianapolis, IN 46204–3417, (317) 232–2542

Mr. William J. O'Brien, State Court Administrator, Supreme Court of Iowa, State House, Des Moines, IA 50319, (515) 281–5241

Dr. Howard P. Schwartz, Judicial Administrator, Kansas Judicial Center 301 West 10th Street, Topeka, KS 66612, (785) 296–4873

Ms. Cicely Jaracz Lambert, Director, Administrative Office of the Courts, 100 Mill Creek Park, Frankfort, KY 40601–9230, (502) 573–2350

Dr. Hugh M. Collins, Judicial Administrator, Supreme Court of Louisiana, 1555 Poydras Street, Suite 1540, New Orleans, LA 70112–3701, (504) 568–5747

Mr. James T. Glessner, State Court Administrator, Administrative Office of the Courts, PO Box 4820, Portland, ME 04112–4820, (207) 822–0792

Mr. George B. Riggin, Jr., State Court Administrator, Administrative Office of the Courts, Courts of Appeal Bldg., 361 Rowe Boulevard, Annapolis, MD 21401, (410) 260–1401

Honorable Barbara A. Dortch-Okara, Chief Justice for Administration and Management, Administrative Office of the Trial Courts, Two Center Plaza, Fifth Floor, Boston, MA 02108, (617) 742–8575

Mr. John D. Ferry, Jr., State Court Administrator, 309 N. Washington Square, Lansing, MI 48909, (517) 373–2222

Ms. Sue K. Dosal, State Court Administrator, Supreme Court of Minnesota, 25 Constitution Avenue, St. Paul, MN 55155, (651) 296–2474

Mr. Rick D. Patt, Acting Director, Administrative Office of the Courts, Supreme Court of Mississippi, PO Box 117, Jackson, MS 39205, (601) 354–7408

Mr. Ronald L. Larkin, State Courts Administrator, Supreme Court of Missouri, PO Box 104480, Jefferson City, MO 65110, (573) 751–3585

Mr. Patrick A. Chenovick, State Court Administrator, Supreme Court of Montana, Justice Building, Room 315, 215 North Sanders, Helena, MT 59620–3002, (406) 444–2621

Mr. Joseph C. Steele, State Court Administrator, Administrative Office of the Courts/Probation, State Capitol Building, Room 1220, Lincoln, NE 68509, (404) 471–3730

Ms. Karen Kavenau, State Court Administrator, Administrative Office of the Courts, Supreme Court Building, 201 South Carson Street, Suite 250, Carson City, NV 89701–4702, (702) 687–5076

Mr. Donald Goodnow, Director, Administrative Office of the Courts, Two Noble Drive, Concord, NH 03301, (603) 271–2521

Honorable Richard J. Williams, Acting Administrative Director, Administrative Office of the Courts, 25 Market Street, Trenton, NJ 08625, (609) 984–0275

Mr. John M. Greacen, Director, Administrative Office of the Courts, 237 Don Gaspar, Room 25, Sante Fe, NM 87501–2178, (505) 827–4800

Honorable Jonathan Lippman, Chief Administrative Judge, Office of Court Administration, 25 Beaver Street, 11th Floor, New York, NY 10004, (212) 428–2100

Honorable Thomas W. Ross, Administrative Director of the Courts, North Carolina Administrative Office of the Courts, 2 East Morgan Street, Raleigh, NC 27601, (919) 733–7107

Mr. Keithe E. Nelson, State Court Administrator, Supreme Court of North Dakota, State Capitol Building, 600 East Boulevard Avenue, Dept. 180, Bismarck, ND 58505–0530, (701) 328–4216

Ms. Margarita M. Palacios, Acting Director, Supreme Court of the Commonwealth of the Northern Mariana Islands, PO Box 2165 CK, Saipan, MP 96950, (670) 236–9800

Mr. Steven C. Hollon, Administrative Director, Supreme Court of Ohio, State Office Tower 30 East Broad Street, Columbus, OH 43266–0419, (614) 466–2653

Mr. Howard W. Conyers, Administrative Director of the Courts, Administrative Office of the Courts 1925 N. Stiles, Suite 305, Oklahoma City, OK 73105, (405) 521–2450

Ms. Kingsley W. Click, State Court Administrator, Office of the State Court Administrator, Supreme Court Building, Salem, OR 97310, (503) 986–5900

Ms. Nancy M. Sobolevitch, Court Administrator, Administrative Office of Pennsylvania Courts, Supreme Court of Pennsylvania, 1515 Market Street, Suite 1414, Philadelphia, PA 19102, (215) 560–6337

Ms. Mercedes M. Bauermeister, Administrative Director of the Courts, General Court of Justice, Office of Court Administration, 6 Vela Street, Hato Rey, PR 00919, (787) 763–3358

Dr. Robert C. Harrall, State Court Administrator, Supreme Court of Rhode Island, 250 Benefit Street, Providence, RI 02903, (401) 277–3263

Ms. Rosalyn Woodson Frierson, Director, South Carolina Court Administration, 1015 Sumter Street, Suite 200, Columbia, SC 29201, (803) 734–1800

Mr. Michael L. Buenger, State Court Administrator, Unified Judicial System, 500 East Capitol Avenue, Pierre, SD 57501, (605) 773–3474

Ms. Cornelia A. Clark, Director, Administrative Office of the Courts, Tennessee Supreme Court, 511 Union Street, Suite 600, Nashville, TN 37243–0607, (615) 741–2687

Mr. Jerry L. Benedict, Administrative Director, Office of Court Administration, Tom C. Clark State Courts Building, 205 West 14th Street, Suite 600, Austin, TX 78701, (512) 463–1625

Mr. Daniel Becker, State Court Administrator, 450 South State, Salt Lake City, UT 84114–0241, (801) 578–3806

Mr. Lee Suskin, Court Administrator, Supreme Court of Vermont, 109 State Street, Montpelier, VT 05609–0701, (802) 828–3278

Ms. Viola E. Smith, Court Administrator, Territorial Court of the Virgin Islands, P.O. Box 70, Charlotte Amalie, St. Thomas, Virgin Islands 00804, (340) 774–6680

Mr. Robert N. Baldwin, State Court Administrator, Supreme Court of Virginia, 100 North Ninth Street, 3rd Floor, Richmond, VA 23219, (804) 786–6455

Ms. Mary Campbell McQueen, State Court Administrator, Supreme Court of Washington, Temple of Justice, PO Box 41174, Olympia, WA 98504–1174, (360) 357–2121

Mr. James M. Albert, Acting Administrative Director, West Virginia Supreme Court of Appeals, E–100, State Capitol Bldg., 1900 Kanawha Blvd. East, Charleston, WV 25305–0833, (304) 558–0145

Mr. J. Denis Moran, Director of State Courts, 213 Northeast State Capitol, Madison, WI 53702, (608) 266–6828

Ms. Holly A. Hansen, State Court Administrator, Supreme Court of Wyoming, Supreme Court Building, 2301 Capital Avenue, Cheyenne, WY 82002, (307) 777–7480

Appendix D—SJI Libraries: Designated Sites and Contacts

Alabama

Supreme Court Library

Mr. Timothy A. Lewis, State Law Librarian, Alabama Supreme Court Bldg., 300 Dexter Avenue, Montgomery, AL 36104, (334) 242–4347

Alaska

Anchorage Law Library

Ms. Cynthia S. Fellows, State Law Librarian, Alaska State Court Law Library, 820 W. Fourth Ave., Anchorage, AK 99501, (907) 264–0583

Arizona

State Law Library

Ms. Gladys Ann Wells, Collection Development, Research Division, Arizona Dept. of Library, Archives and Public Records, State Law Library, 1501 W. Washington, Phoenix, AZ 85007, (602) 542–4035

Arkansas

Administrative Office of the Courts

Mr. James D. Gingerich, Director, Supreme Court of Arkansas, Justice Building, Little Rock, AR 72201–1078, (501) 682–9400

California

Administrative Office of the Courts

Mr. William C. Vickrey, State Court Administrator, Administrative Office of the Courts, 455 Golden Gate Avenue, Suite 5622, San Francisco, CA 94107, (415) 865–4200

Colorado

Supreme Court Library

Ms. Lois Calvert, Supreme Court Law Librarian, Colorado State Judicial Building, 2 East 14th Avenue, Denver, CO 80203, (303) 837–3720

Connecticut

State Library

Ms. Denise D. Jernigan, Head, Law/Legislative Reference Unit, Connecticut State Library, Hartford, CT 06106, (860) 566–2516

Delaware

Administrative Office of the Courts

Mr. Michael E. McLaughlin, Deputy Director, Administrative Office of the Courts, Carvel State Office Building, 820 North French Street, 11th Floor, PO Box 8911, Wilmington, DE 19801, (302) 577–8481

District of Columbia

Executive Office, District of Columbia Courts

Mr. Ulysses Hammond, Executive Officer, District of Columbia Courts, 500 Indiana Avenue, NW., Washington, D.C. 20001, (202) 879–1700

Florida

Administrative Office of the Courts

Mr. Kenneth Palmer, State Court Administrator, Supreme Court Building, 500 South Duval Street, Tallahassee, FL 32399–1900, (850) 922–5081

Georgia

Administrative Office of the Courts

George Lange III, Director, Administrative Office of the Courts, 47 Trinity Avenue, Suite 414, Atlanta, GA 30334, (404) 656–5171

Hawaii

Supreme Court Library

Ms. Ann Koto, State Law Librarian, The Supreme Court Law Library, 417 South King St., Room 119, Honolulu, HI 96813, (808) 539–4965

Idaho

AOC Judicial Education Library/State Law Library

Ms. Beth Peterson, State Law Librarian, Idaho State Law Library, Supreme Court Building, 451 West State St., Boise, ID 83720, (208) 334–3316

Illinois

Supreme Court Library

Ms. Brenda Larison, Supreme Court of Illinois Library, 200 East Capitol Avenue, Springfield, IL 62701–1791, (217) 782–2425

Indiana

Supreme Court Library

Dennis Lager, Supreme Court Librarian, Supreme Court Library, State House, Room 316, Indianapolis, IN 46204, (317) 232–2557

Iowa

Administrative Office of the Court

Dr. Jerry K. Beatty, Executive Director, Judicial, Education & Planning, Administrative Office of the Courts, State Capital Building, Des Moines, IA 50319, (515) 281–8279

Kansas

Supreme Court Library

Mr. Fred Knecht, Law Librarian, Kansas Supreme Court Library, 301 West 10th Street, Topeka, KS 66612, (913) 296–3257

Kentucky

State Law Library

Ms. Sallie Howard, State Law Librarian, State Law Library, State Capital, Room 200, Frankfort, KY 40601, (502) 564–4848

Louisiana

State Law Library

Ms. Carol Billings, Director, Louisiana Law Library 301 Loyola Avenue, New Orleans, LA 70112, (504) 568–5705

Maine

State Law and Legislative Reference Library

Ms. Lynn E. Randall, State Law Librarian, 43 State House Station, Augusta, ME 04333, (207) 287–1600

Maryland

State Law Library

Mr. Michael S. Miller, Director, Maryland State Law Library, Court of Appeal Building, 361 Rowe Boulevard, Annapolis, MD 21401, (410) 260–1430

Massachusetts

Middlesex Law Library

Ms. Sandra Lindheimer, Librarian, Middlesex Law Library, Superior Court House, 40 Thorndike Street, Cambridge, MA 02141, (617) 494–4148

Michigan

Michigan Judicial Institute

Mr. Kevin Bowling, Director, Michigan Judicial Institute, 222 Washington Square North, PO Box 30205, Lansing, MI 48909, (517) 334–7804

Minnesota

State Law Library (Minnesota Judicial Center)

Mr. Marvin R. Anderson, State Law Librarian, Supreme Court of Minnesota, 25 Constitution Avenue, St. Paul, MN 55155, (612) 297–2084

Mississippi

Mississippi Judicial College

Mr. Leslie Johnson, Director, University of Mississippi, PO Box 8850, University, MS 38677, (601) 232–5955

Montana

State Law Library

Ms. Judith Meadows, State Law Librarian, State Law Library of Montana, 215 North Sanders, Helena, MT 59620, (406) 444–3660

Nebraska

Administrative Office of the Courts

Mr. Joseph C. Steele, State Court Administrator, Administrative Office of the Courts/Probation, State Capitol Building, Room 1220, Lincoln, NE 68509, (402) 471–3730

Nevada

National Judicial College

Clara Kelly, Law Librarian, National Judicial College, Judicial College Building, University of Nevada, Reno, NV 89550, (702) 784–6747

New Jersey

New Jersey State Library

Marjorie Garwig, Supervising Law Librarian, New Jersey State Law Library, 185 West State Street, PO Box 520, Trenton, NJ 08625–0250, (609) 292–6230

New Mexico

Supreme Court Library

Mr. Thaddeus Bejnar, Librarian, Supreme Court Library, Post Office Drawer L, Santa Fe, NM 87504, (505) 827–4850

New York

Supreme Court Library

Ms. Colleen Stella, Principal Law Librarian, New York State Supreme, Court Law Library, Onondaga County Court House, 401 Montgomery Street, Syracuse, NY 13202, (315) 435–2063

North Carolina

Supreme Court Library

Ms. Louise Stafford,
Librarian, North Carolina Supreme, Court Library, PO Box 28006, 2 East Morgan Street, Raleigh, NC 27601, (919) 733–3425

North Dakota

Supreme Court Library

Ms. Marcella Kramer, Assistant Law Librarian, Supreme Court Law Library, 600 East Boulevard Avenue, Dept. 182, 2nd Floor, Judicial Wing, Bismarck, ND 58505–0540, (701) 328–2229

Northern Mariana Islands

Supreme Court of the Northern Mariana Islands

Honorable Marty W.K. Taylor, Chief Justice, Supreme Court of the Northern Mariana Islands, PO Box 2165, Saipan, MP 96950, (670) 234–5275

Ohio

Supreme Court Library

Mr. Paul S. Fu, Law Librarian, Supreme Court Law Library, Supreme Court of Ohio, 30 East Broad Street, Columbus, OH 43266–0419, (614) 466–2044

Oklahoma

Administrative Office of the Courts

Mr. Howard W. Conyers, Administrative Director, 1915 North Stiles, Suite 305, Oklahoma City, OK 73105, (405) 521–2450

Oregon

Administrative Office of the Courts

Ms. Kingsley W. Click, State Court Administrator, Office of the State Court Administrator, Supreme Court Building, Salem, OR 97810, (503) 986–5900

Pennsylvania

State Library of Pennsylvania

Ms. Sharon Anderson, State Justice Depository, State Library of Pennsylvania, Collection Management, Room G–48 Forum Building, P.O. Box 1601, Harrisburg, PA 17105–1601, (717) 787–5718

Puerto Rico

Office of Court Administration

Alfredo Rivera-Mendoza, Esq., Director, Area of Planning and Management, Office of Court Administration, P.O. Box 917, Hato Rey, R 00919

Rhode Island

Roger Williams Law School Library

Mr. Kendall Svengalis, Law Librarian, Licht Judicial Complex, 250 Benefit Street, Providence, RI (401) 254–4546

South Carolina

Coleman Karesh Law Library (University of South Carolina School of Law)

Mr. Steve Hinckley, Library Director, Coleman Karesh Law Library, U.S.C. Law Center, University of South Carolina, Columbia, SC 29208 (803) 777–5944

Tennessee

Tennessee State Law Library

Judge Connie Clark, Director, Administrative Office of the Courts, State of Tennessee, 511 Union, Nashville, TN 37243–0607, (615) 741–2687

Texas

State Law Library

Ms. Kay Schleuter, Director, State Law Library, P.O. Box 12367, Austin, TX 78711, (512) 463–1722

U.S. Virgin Islands

Library of the Territorial Court of the Virgin Islands (St. Thomas)

Librarian, The Library, Territorial Court of the Virgin Islands, Post Office Box 70, Charlotte Amalie, St. Thomas, U.S. Virgin Islands 00804

Utah

Utah State Judicial Administration Library

Ms. Debbie Christiansen, Utah State Judicial, Administration Library, AOC, 450 South State, P.O. Box 140241, Salt Lake City, UT 84114–0241, (801) 533–6371

Vermont

Supreme Court of Vermont

Mr. Lee Suskin, Court Administrator, Supreme Court of Vermont, 109 State Street, Montpelier, VT 05609–0701, (802) 828–3278

Virginia

Administrative Office of the Courts

Mr. Robert N. Baldwin, State Court Administrator, Supreme Court of Virginia, Administrative Offices, 100 North Ninth Street, 3rd Floor, Richmond, VA 28219 (804) 786–6455

Washington

Washington State Law Library

Ms. Deborah Norwood, State Law Librarian, Washington State Law Library, Temple of Justice, P.O. Box 40751, Olympia, WA 98504–0751 (206) 357–2136

West Virginia

Administrative Office of the Courts

Mr. Richard H. Rosswurm, Chief Deputy, West Virginia Supreme Court of Appeals, State Capitol, 1900 Kanawha, Charleston, WV 25305 (304) 348–0145

Wisconsin

State Law Library

Ms. Marcia Koslov, State Law Librarian, State Law Library, 310E State Capitol, P.O. Box 7881, Madison, WI 53707 (608) 266–1424

Wyoming

Wyoming State Law Library

Ms. Kathy Carlson, Law Librarian, Wyoming State Law Library, Supreme Court Building, 2801 Capitol Avenue, Cheyenne, WY 82002, (307) 777–7509

National

American Judicature Society

Ms. Clara Wells, Assistant for Information and Library Services, 25 East Washington Street, Suite 1600, Chicago, IL 60602, (312) 558–6900

National Center for State Courts

Ms. Peggy Rogers, Acquisitions/Serials Librarian, 300 Newport Avenue, Williamsburg, VA 23187–8798, (804) 253–2000

JERITT

Maureen Conner, Project Director, Judicial Education Reference, Information, and Technical Transfer Project (JERITT), Michigan State University, 560 Baker Hall, East Lansing, MI 48824, (517) 353–8608

Appendix E—Illustrative List of Model Curricula

The following list includes examples of model SJI-supported curricula that State judicial educators may wish to adapt for presentation in education programs for judges and other court personnel with the assistance of a Curriculum Adaptation Grant. *Please refer to section VII.E. for information on submitting a letter application for a Curriculum Adaptation Grant.* A list of all SJI-supported education projects is available on the SJI website (http://www.statejustice.org). Please also check with the JERITT project (517/353–8603) and with your State SJI-designated library (see Appendix D) for information on other SJI-supported curricula that may be appropriate for in-State adaptation.

Alternative Dispute Resolution

Judicial Settlement Manual (National Judicial College: SJI–89–089)

Improving the Quality of Dispute Resolution (Ohio State University College of Law: SJI–93–277)

Comprehensive ADR Curriculum for Judges (American Bar Association: SJI–95–002)

Domestic Violence and Custody Mediation (American Bar Association: SJI–96–038)

Court Coordination

Bankruptcy Issues for State Trial Court Judges (American Bankruptcy Institute: SJI–91–027)

Intermediate Sanctions Handbook: Experiences and Tools for Policymakers (Center for Effective Public Policy: IAA–88–NIC–001)

Regional Conference Cookbook: A Practical Guide to Planning and Presenting a Regional Conference on State-Federal Judicial Relationships (U.S. Court of Appeals for the 9th Circuit: SJI–92–087)

Bankruptcy Issues and Domestic Relations Cases (American Bankruptcy Institute: SJI–96–175)

Court Management

Managing Trials Effectively: A Program for State Trial Judges (National Center for State Courts/National Judicial College: SJI–87–066/067, SJI–89–054/055, SJI–91–025/026)

Caseflow Management Principles and Practices (Institute for Court Management/National Center for State Courts: SJI–87–056)

A Manual for Workshops on Processing Felony Dispositions in Limited Jurisdiction Courts (National Center for State Courts: SJI–90–052)

Managerial Budgeting in the Courts; Performance Appraisal in the Courts; Managing Change in the Courts; Court Automation Design; Case Management for Trial Judges; Trial Court Performance Standards (Institute for Court Management/National Center for State Courts: SJI–91–043)

Strengthening Rural Courts of Limited Jurisdiction and Team Training for Judges and Clerks (Rural Justice Center: SJI–90–014, SJI–91–082)

Interbranch Relations Workshop (Ohio Judicial Conference: SJI–92–079)

Integrating Trial Management and Caseflow Management (Justice Management Institute: SJI–93–214)

Leading Organizational Change (California Administrative Office of the Courts: SJI–94–068)

Privacy Issues in Computerized Court Record Keeping: An Instructional Guide for Judges and Judicial Educators (National Judicial College: SJI–94–015)

Managing Mass Tort Cases (National Judicial College: SJI–94–141)
Employment Responsibilities of State Court Judges (National Judicial College: SJI–95–025)
Dealing with the Common Law Courts: A Model Curriculum for Judges and Court Staff (Institute for Court Management/National Center for State Courts: SJI–96–159)
Caseflow Management (Justice Management Institute: SJI–98–041)

Courts and Communities

A National Program for Reporting on the Courts and the Law (American Judicature Society: SJI–88–014)
Victim Rights and the Judiciary: A Training and Implementation Project (National Organization for Victim Assistance: SJI–89–083)
National Guardianship Monitoring Project: Trainer and Trainee's Manual (American Association of Retired Persons: SJI–91–013)
Access to Justice: The Impartial Jury and the Justice Systemand When Implementing the Court-Related Needs of Older People and Persons with Disabilities: An Instructional Guide (National Judicial College: SJI–91–054)
You Are the Court System: A Focus on Customer Service (Alaska Court System: SJI–94–048)
Serving the Public: A Curriculum for Court Employees (American Judicature Society: SJI–96–040)
Courts and Their Communities: Local Planning and the Renewal of Public Trust and Confidence: A California Statewide Conference (California Administrative Office of the Courts: SJI–98–008)
Public Trust and Confidence in the Courts (Mid-Atlantic Association for Court Management: SJI–98–208)
ACA National Conference: Public Trust and Confidence (Arizona Courts Association: SJI–99–063)

Criminal Process

Search Warrants: A Curriculum Guide for Magistrates (American Bar Association Criminal Justice Section: SJI–88–035)

Diversity, Values, and Attitudes

Troubled Families, Troubled Judges (Brandeis University: SJI–89–071)
The Crucial Nature of Attitudes and Values in Judicial Education (National Council of Juvenile and Family Court Judges: SJI–90–058)
Enhancing Diversity in the Court and Community (Institute for Court Management/National Center for State Courts: SJI–91–043)
Cultural Diversity Awareness in Nebraska Courts from Native American Alternatives to Incarceration Project (Nebraska Urban Indian Health Coalition: SJI–93–028)
Race Fairness and Cultural Awareness Faculty Development Workshop (National Judicial College: SJI–93–063)
A Videotape Training Program in Ethics and Professional Conduct for Nonjudicial Court Personnel and The Ethics Fieldbook: Tool For Trainers (American Judicature Society: SJI–93–068)
Court Interpreter Training Course for Spanish Interpreters (International Institute of Buffalo: SJI–93–075)
Doing Justice: Improving Equality Before the Law Through Literature-Based Seminars for Judges and Court Personnel (Brandeis University: SJI–94–019)
Indian Welfare Act''; ''Defendants, Victims, and Witnesses with Mental Retardation (National Judicial College: SJI–94–142)
Multi-Cultural Training for Judges and Court Personnel (St. Petersburg Junior College: SJI–95–006)
Ethical Standards for Judicial Settlement: Developing a Judicial Education Module (American Judicature Society: SJI–95–082)
Code of Ethics for the Court Employees of California (California Administrative Office of the Courts: SJI 95–245)
Workplace Sexual Harassment Awareness and Prevention (California Administrative Office of the Courts: SJI 96–089)
Just Us On Justice: A Dialogue on Diversity Issues Facing Virginia Courts (Virginia Supreme Court: SJI–96–150)
When Bias Compounds: Insuring Equal Treatment for Women of Color in the Courts (National Judicial Education Program: SJI 96–161)
When Judges Speak Up: Ethics, the Public, and the Media (American judicature Society: SJI–96–152)

Family Violence and Gender-Related Violent Crime

National Judicial Response to Domestic Violence: Civil and Criminal Curricula (Family Violence Prevention Fund: SJI–87–061, SJI–89–070, SJI–91–055).
Domestic Violence: A Curriculum for Rural Courts (Rural Justice Center: SJI–88–081)
Judicial Training Materials on Spousal Support; Judicial Training Materials on Child Custody and Visitation (Women Judges' Fund for Justice: SJI–89–062)
Judicial Response to Stranger and Nonstranger Rape and Sexual Assault (National Judicial Education Program: SJI–92–003)
Domestic Violence & Children: Resolving Custody and Visitation Disputes (Family Violence Prevention Fund: SJI–93–255)
Adjudicating Allegations of Child Sexual Abuse When Custody Is In Dispute (National Judicial Education Program: SJI 95–019)
Handling Cases of Elder Abuse: Interdisciplinary Curricula for Judges and Court Staff (American Bar Association: SJI–93–274)

Health and Science

Environmental Law Resource Handbook (University of New Mexico Institute for Public Law: SJI–92–162)
A Judge's Deskbook on the Basic Philosophies and Methods of Science: Model Curriculum (University of Nevada, Reno: SJI–97–030)

Judicial Education For Appellate Court Judges

Career Writing Program for Appellate Judges (American Academy of Judicial Education: SJI–88–086)
Civil and Criminal Procedural Innovations for Appellate Courts (National Center for State Courts: SJI–94–002)

Judicial Education Faculty, and Program Development

The Leadership Institute in Judicial Education and The Advanced Leadership Institute in Judicial Education (University of Memphis: SJI–91–021)
''Faculty Development Instructional Program'' from Curriculum Review (National Judicial College: SJI–91–039)
Resource Manual and Training for Judicial Education Mentors (National Association of State Judicial Educators: SJI–95–233)
Institute for Faculty Excellence in Judicial Education, (National Council of Juvenile and Family Court Judges: SJI–96–042)

Orientation and Mentoring of Judges and Court Personnel

Legal Institute for Special and Limited Jurisdiction Judges (National Judicial College: SJI–89–043, SJI–91–040)
Pre-Bench Training for New Judges (American Judicature Society: SJI–90–028)
A Unified Orientation and Mentoring Program for New Judges of All Arizona Trial Courts (Arizona Supreme Court: SJI–90–078)
Court Organization and Structure (Institute for Court Management/National Center for State Courts: SJI–91–043)
Judicial Review of Administrative Agency Decisions (National Judicial College: SJI–91–080)
New Employee Orientation Facilitators Guide (Minnesota Supreme Court: SJI–92–155)
Magistrates Correspondence Course (Alaska Court System: SJI–92–156)
Computer-Assisted Instruction for Court Employees (Utah Administrative Office of the Courts: SJI–94–012)
Bench Trial Skills and Demeanor: An Interactive Manual (National Judicial College: SJI 94–058)
Ethical Issues in the Election of Judges (National Judicial College: SJI–94–142)

Juveniles and Families in Court

Fundamental Skills Training Curriculum for Juvenile Probation Officers (National Council of Juvenile and Family Court Judges: SJI–90–017)
Child Support Across State Lines: The Uniform Interstate Family Support Act from Uniform Interstate Family Support Act: Development and Delivery of a Judicial Training Curriculum (ABA Center on Children and the Law: SJI 94–321)

Strategic and Futures Planning

Minding the Courts into the Twentieth Century (Michigan Judicial Institute: SJI–89–029)

An Approach to Long-Range Strategic Planning in the Courts (Center for Public Policy Studies: SJI–91–045)

Substance Abuse

Effective Treatment for Drug-Involved Offenders: A Review & Synthesis for Judges and Court Personnel (Education Development Center, Inc.: SJI–90–051)

Good Times, Bad Times: Drugs, Youth, and the Judiciary (Professional Development and Training Center, Inc.: SJI–91–095)

Gaining Momentum: A Model Curriculum for Drug Courts (Florida Office of the State Courts Administrator: SJI–94–291)

Judicial Response to Substance Abuse: Children, Adolescents, and Families (National Council of Juvenile and Family Court Judges: SJI–95–030)

Appendix F—Illustrative List of Replicable Projects

The following list includes examples of SJI-supported projects that might successfully adapted and replicated in other in other jurisdictions. *Please see section VI. for information on submitting a concept paper requesting a grant to replicate one of these or another SJI-supported project.* A list of all SJI-supported projects is available on the Institute's website (http://www.statejustice.org).

Application of Technology

Automated Teller Machines for Juror Payment

Grantee: District of Columbia Courts, Contact: Philip Braxton, 500 Indiana Avenue, NW, Washington, DC 20001, (202) 879–1700, Grant No: SJI–92–139

Analytical Judicial Desktop

Grantee: Fund for the City of New York, Contact: Michele Sviridoff, Mid-Town Community Court, 314 W. 54th Street, New York, New York 10019, (212) 484–2721, Grant No: SJI–94–323

Children and Families in Court

Parent Education and Custody Effectiveness (PEACE) Program

Grantee: Hofstra University, Contact: Andrew Shephard, 1000 Fulton Avenue, Hampstead, NY 11550–1090, (516) 463–5890, Grant No: SJI–93–265

A Judge's Guide to Culturally Competent Responses to Latino Family Violence

Grantee: Center for Public Policy Studies, Contacts: Stephen Weller, John Martin, 999 18th Street, Suite 900, Denver, Colorado 80202, Grant No: SJI–96–230

Court Management, Coordination and Planning

Tribal Court-State Court Forums: A How To-Do-It Guide to Prevent and Resolve Jurisdictional Disputes and Improve Cooperation Between Tribal and State Courts

Grantee: National Center for State Courts, Contact: Frederick Miller, 1331 17th Street, Suite 402, Denver, Colorado 80202–1554, (303) 293–3063, Grant No: SJI–91–011)

Measurement of Trial Court Performance

Grantee: Supreme Court of Virginia, Contact: Beatrice Monahan, 100 North Ninth Street, Third Floor, Richmond, VA 23219, (804) 786–6455, Grant No: SJI–91–042

Probate Caseflow Management Project

Grantee: Ohio Supreme Court/Trumbull County Probate Court, Contact: Hon. Susan Lightbody, 160 High Street, NW, Warren, OH 44481, (216) 675–2566, Grant No: SJI–92–081; SJI–92–081–P94–1; SJI–92–081–P95–1

Implementing Quality Methods in Court Operations

Grantee: Oregon Supreme Court, Contact: Scott Crampton, Supreme Court Building, Salem, OR 97310, (503) 378–5845, Grant No: SJI–92–170

Applying TQM Concepts to Systemwide Problems of the Maine Judicial Branch

Grantee: Maine Supreme Judicial Court, Contact: James T. Glessner, PO Box 4820, Portland, Maine 04101, (207) 822–0792, Grant No: SJI–93–072

Arizona-Sonora Judicial Relations Project

Grantee: Arizona Supreme Court, Contact: Dennis Metrick, 1501 W. Washington Street, Phoenix, Arizona 85007–3327, (602) 542–4532, Grant No: SJI–93–202

Implementing Strategic Planning in the Trial Courts

Grantee: Center for Public Policy Studies, Contact: David Price, 999 18th Street, Suite 900, Denver, CO 80202, (303) 863–0900, Grant No: SJI–94–021

Interstate Compacts and Cooperation in Guardianship Cases

Grantee: National College of Probate Judges, Contact: Paula Hannaford, PO Box 8978, Williamsburg, Virginia 23187–8798, (757) 253–2000, Grant No: SJI–97–241

Courts and Communities

AARP Volunteers: A Resource for Strengthening Guardianship Services

Grantee: American Association of Retired Persons, Contact: Wayne Moore, 601 E Street, NW, Washington, DC 20049, (202) 434–2165, Grant Nos: SJI–88–033 /SJI–91–013

Establishing a Consumer Research and Service Development Process Within the Judicial System

Grantee: Supreme Court of Virginia, Contact: Beatrice Monahan, Administrative Offices, Third Floor, 100 North Ninth Street, Richmond, VA 23219, (804) 786–6455, Grant No: SJI–89–068

Tele-Court: A Michigan Judicial System Public Information Program

Grantee: Michigan Supreme Court, Contact: Judy Bartell, State Court Administrative Office, 611 West Ottawa Street, PO Box 30048, Lansing, MI 48909, (517) 373–0130, Grant No: SJI–91–015

Arizona Pro Per Information System (QuickCourt)

Grantee: Arizona Supreme Court, Contact: Jeannie Lynch, Administrative Office of the Court, 1501 West Washington Street, Suite 411, Phoenix, AZ 85007–3330, (602) 542–9554, Grant No: SJI–91–084

Using Judges and Court Personnel to Facilitate Access to Courts by Limited English Speakers

Grantee: Washington Office of the Administrator for the Courts, Contact: Joanne Moore, 1206 South Quince Street, PO Box 41170, Olympia, WA 98504–1170, (206) 753–3365, Grant No: SJI–92–147

Pro se Forms and Instructions Packets

Grantee: Michigan Supreme Court, Contact: Pamela Creighton 611 W. Ottawa Street, Lansing, MI 48909, Grant No: SJI–94–003

Understanding the Judicial Process: A Curriculum and Community Service Program

Grantee: Drake University, Contact: Timothy Buzzell, Opperman Hall, Des Moines, IA 50311, (515) 271–3205, Grant No: SJI–94–022

Court Self-Service Center

Grantee: Maricopa County Superior Court, Contact: Bob James, 201 W. Jefferson, 4th Floor, Phoenix, AZ 85003, (602) 506–6314, Grant No: SJI–94–324

Computer-Based Interpreter Test Delivery System

Grantee: Maryland Administrative Office of the Courts, Contact: Elizabeth Veronis, 361 Rowe Boulevard, Annapolis, Maryland 21401, (410) 974–2141, Grant No: SJI–96–164

Public Opinion and the Courts

Grantee: New Mexico Administrative Office of the Courts, Contact: John M. Greacen, 237 Don Gaspar, Room 25, Santa Fe, New Mexico 87501–2178, (505) 827–4800 Grant No: SJI–97–026

Sentencing

Facilitating the Appropriate Use of Intermediate Sanctions

Grantee: Center for Effective Public Policy, Contact: Peggy McGarry, 8403 Colesville Road, Suite 720, (301) 589–9383, Grant No: SJI–95–078

Substance Abuse

Alabama Alcohol and Drug Abuse Court Referral Officer Program

Grantee: Alabama Administrative Office of the Courts, Contact: Angelo Trimble, 817 South Court Street, Montgomery, AL 36130–0101, (334) 834–7990, Grant Nos: SJI–88–030/SJI–89–080/SJI–90–005

Substance Abuse Assessment and Intervention to Reduce Driving Under the Influence of Alcohol Recidivism

Grantee: California Administrative Office of the Courts c/o El Cajon, Municipal Court, Contact: Fred Lear, 250 E. Main Street, El Cajon, CA 92020, (619) 441–4336, Grant No: SJI–88–029/SJI–90–008

Court Referral Officer Program

Grantee: New Hampshire Supreme Court, Contact: Jim Kelley, Supreme Court Building, Concord, NH 03301, (603) 271–2521, Grant No: SJI–92–142

Appendix G—State Justice Institute

Scholarship Application

This application does not serve as a registration for the course. Please contact the education provider.

Applicant Information:

1. Applicant Name: _____
(Last) (First) (M)
2. Position: _____
3. Name of Court: _____
4. Address: _____
Street/P.O. Box
_____
City State Zip Code
5. Telephone No. _____
6. Congressional District: _____

Program Information:

7. Course Name: _____
8. Course Dates: _____
9. Course Provider: _____
10. Location Offered: _____

Estimated Expenses: (Please note: Scholarships are limited to tuition and transportation expenses to and from the site of the course up to a maximum of $1,500.)

Tuition: $ _____
Transportation: $ _____
(Airfare, train fare, or, if you plan to drive, an amount equal to the approximate distance and mileage rate.)
Amount Requested: $ _____

Are you seeking/have you received a scholarship for this course from another source? ____ Yes ____ No
If so, please specify the source(s) and amounts(s) _____

Additional Inforamtion: Please attach a current resume or professional summary, and provide the information requested below. (You may attach additional pages if necessary.)

1. Please describe your need to acquire the skills and knowledge taught in this course.
2. Please describe how will taking this course benefit you, your court, and the State's courts generally.
3. Is there an educational program currently available through your State on this topic?
4. Are State or local funds available to support your attendance at the proposed course? If so, what amount(s) will be provided?
5. How long have you served as a judge or court manager?
_____
6. How long do you anticipate serving as a judge or court manager, assuming reelection or reappointment?
0–1 year 2–4 years 5–7 years
8–10 years 11+ years
7. What continuing professional education programs have you attended in the past year? Please indicate which were mandatory (M) and which were non-mandatory (V).

Statement of Applicant's Commitment

If a scholarship is awarded, I will share the skills and knowledge I have gained with my court colleagues locally, and if possible, Statewide, and I will submit an evaluation of the educational program to the State Justice Institute and to the Chief Justice of my State.

_____
Signature
_____
Date

Please return this form and Form S–2 to: Scholarship Coordinator, State Justice Institute, 1650 King Street, Suite 600, Alexandria Virginia 22314 (Form S2)

State Justice Institute

Scholarship Application

Concurrence

I, _____
Name of Chief Justice (or Chief Justice's Designee)
have reviewed the application for a scholarship to attend the program entitled
_____
prepared by _____
Name of Applicant
and concur in its submission to the State Justice Institute. The applicant's participation in the program would benefit the State; the applicant's absence to attend the program would not present an undue hardship to the court; public funds are not available to enable the applicant to attend this course; and receipt of a scholarship would not diminish the amount of funds made available by the State for judicial branch education.

_____
Signature
_____
Name
_____
Title
_____
Date

Appendix H—Line-Item Budget Form

FOR CONCEPT PAPERS, CURRICULUM ADAPTATION AND TECHNICAL ASSISTANCE GRANT REQUESTS

Category match	SJI funds	Cash match	In-kind
Personnel	$____	$____	$____
Fringe Benefits	$____	$____	$____
Consultant/Contractual	$____	$____	$____
Travel	$____	$____	$____
Equipment	$____	$____	$____
Supplies	$____	$____	$____
Telephone	$____	$____	$____
Postage	$____	$____	$____
Printing/Photocopying	$____	$____	$____
Audit	$____	$____	$____
Other	$____	$____	$____
Indirect Costs (%)	$____	$____	$____
Total	$____	$____	$____
Project Total:	$_____		

Concept papers requesting an acccelerated award, Curriculum Adaptation grant requests, and Technical Assistance grant requests should be accompanied by a budget narrative explaining the basis for each line-item listed in the proposed budget.

Financial assistance has been or will be sought for this project from the following other source:

_____

Appendix I—State Justice Institute

Certificate of State Approval

The _____
Name of State Supreme Court or Designated Agency or Council

has reviewed the application entitled _____ prepared by _____
Name of Applicant

approves its submission to the State Justice Institute, and

[ ] agrees to receive and administer and be accountable for all funds awarded by the Institute pursuant to the application.

[ ] designates _____
Name of Trial or Appellate Court or Agency

as the entity to receive, administer, and be accountable for all funds awarded by the Institute pursuant to the application.

_____
Signature

_____
Date

_____
Name

_____
Title

[FR Doc. 99–26469 Filed 10–14–99; 8:45 am]

BILLING CODE 6820–SC–P

federal register

Friday
October 15, 1999

Part III

Department of Defense

Department of the Navy

32 CFR Part 700

United States Navy Regulations; Final Rule

DEPARTMENT OF DEFENSE

Department of the Navy

32 CFR Part 700

RIN 0703–AA55

United States Navy Regulations

AGENCY: Department of the Navy, DOD.

ACTION: Final rule.

SUMMARY: The Department of the Navy is amending the Navy Regulations incorporating new subparts and modifying some existing subparts. This revision will allow the published Navy Regulations to comport with the 1990 Navy Regulations currently in use.

DATES: This rule is effective November 15, 1999.

FOR FURTHER INFORMATION CONTACT: LCDR James L. Roth, JAGC, USN, Office of the Judge Advocate General, Washington Navy Yard, 1322 Patterson Ave., SE., Suite 3000, Washington, DC 20374–5066, Attention: Code 13, (703) 604–8228.

SUPPLEMENTARY INFORMATION: On 14 September 1990, the Secretary of the Navy (SECNAV) issued revised and amended Navy Regulations (NAVREGS) in accordance with 10 U.S.C 6011. These regulations superseded the NAVREGS amended in 1978. (See 45 FR 80277, 4 December 1980). Since that time, no changes have been published to reflect the current NAVREGS. In accordance with 5 U.S.C. § 552, the Department of the Navy must publish these regulations as amended.

List of Subjects in 32 CFR Part 700

Armed Forces.

For the reasons set forth in the preamble, revise part 700 of title 32 of the Code of Federal Regulations as follows:

Part 700—United States Navy Regulations and Official Records

Subpart A—Navy Regulations

700.101 Origin and history of United States Navy Regulations.
700.102 Statutory authority for issuance of United States Navy Regulations.
700.103 Purpose and effect of United States Navy Regulations.
700.104 Statutory authority for prescription of other regulations.
700.105 Issuance of directives by other officers and officials.
700.106 Control of administrative requirements.
700.107 Maintenance of Navy Regulations.

Subpart B—The Department of the Navy

700.201 Origin and authority of the Department of the Navy.
700.202 Mission of the Department of the Navy.
700.203 Composition.
700.204 The Principal Elements of the Department of the Navy.

Subpart C—The Secretary of the Navy

The Secretary of the Navy

700.301 Responsibilities of the Secretary of the Navy.
700.302 Responsibilities within the Department of the Navy.
700.303 Succession.
700.304 Recommendations to Congress.
700.305 Assignment of functions.
700.306 Assignment of duty and titles.
700.307 Powers with respect to the Coast Guard.

The Office of the Secretary of the Navy

700.310 Composition.
700.311 Sole responsibilities.
700.312 Authority over organizational matters.
700.320 The Civilian Executive Assistants.
700.321 The Under Secretary of the Navy.
700.322 Assistant Secretaries of the Navy; statutory authorization.
700.323 The Assistant Secretary of the Navy (Financial Management).
700.324 The Assistant Secretary of the Navy (Manpower and Reserve Affairs).
700.325 The Assistant Secretary of the Navy (Installations and Environment).
700.326 The Assistant Secretary of the Navy (Research, Development and Acquisition).
700.327 The General Counsel of the Navy.

The Office the Secretary of the Navy/The Staff Assistants

700.330 The Staff Assistants.
700.331 The Judge Advocate General.
700.332 The Naval Inspector General.
700.333 The Chief of Naval Research.
700.334 The Chief of Information.
700.335 The Chief of Legislative Affairs.
700.336 The Director, Office of Program Appraisal.
700.337 The Auditor General.

Subpart D—The Chief of Naval Operations

700.401 Precedence.
700.402 Succession.
700.403 Statutory authority and responsibility of the Chief of Naval Operations.
700.404 Statutory authority and responsibility of the Office of the Chief of Naval Operations.
700.405 Delegated authority and responsibility.
700.406 Naval Vessel Register, classification of naval craft, and status of ships and service craft.

Subpart E—The Commandant of the Marine Corps

700.501 Precedence.
700.502 Succession.
700.503 Statutory authority and responsibility of the Commandant of the Marine Corps.
700.504 Statutory Authority and Responsibility of the Headquarters, Marine Corps.
700.505 Delegated authority and responsibility.

Subpart F—The United States Coast Guard (When Operating as a Service of the Navy)

700.601 Relationship and operation as a service in the Navy.
700.602 The Commandant of the Coast Guard.
700.603 Duties and responsibilities.

Subpart G—Commanders in Chief and Other Commanders

Titles and Duties of Commanders

700.701 Titles of Commanders.
700.702 Responsibility and authority of commanders.
700.703 To announce assumption of command.
700.704 Readiness.
700.705 Observance of international law.
700.706 Keeping immediate superiors informed.

Staffs of Commanders

700.710 Organization of a staff.
700.711 Authority and responsibilities of officers of a staff.

Administration and Discipline

700.720 Administration and discipline: Staff embarked.
700.721 Administration and discipline: Staff based ashore.
700.722 Administration and discipline: Staff unassigned to an administrative command.
700.723 Administration and discipline: Separate and detached command.

Subpart H—The Commanding Officer

700.801 Applicability.
700.802 Responsibility.
700.804 Organization of Commands.
700.809 Persons found under incriminating circumstances.
700.810 Rules for visits.
700.811 Dealers, tradesmen, and agents.
700.812 Postal matters.
700.815 Deaths.
700.816 The American National Red Cross.
700.819 Records.
700.822 Delivery of personnel to civil authorities and service of subpoena or other process.
700.826 Physical security.
700.827 Effectiveness for service.
700.828 Search by foreign authorities.
700.832 Environment pollution.
700.834 Care of ships, aircraft, vehicles and their equipment.
700.835 Work, facilities, supplies, or services for other Government departments, State or local governments, foreign governments, private parties and morale, welfare and recreational activities.

Commanding Officers Afloat

700.840 Unauthorized persons on board.
700.841 Control of passengers.
700.842 Authority over passengers.
700.844 Marriages on board.

700.845 Maintenance of logs.
700.846 Status of logs.
700.847 Responsibility of a master of an in-service ship of the Military Sealift Command.
700.848 Relations with merchant seamen.
700.855 Status of boats.
700.856 Pilotage.
700.857 Safe navigation and regulations governing operation of ships and aircraft.
700.859 Quarantine.
700.860 Customs and immigration inspections.

Special Circumstances/Ships in Naval Stations and Shipyards

700.871 Responsibility for safety of ships and craft at a naval station or shipyard.
700.872 Ships and craft in drydock.
700.873 Inspection incident to commissioning of ships.

Special Circumstances/Prospective Commanding Officers

700.880 Duties of the prospective commanding officer of a ship.

Subpart I—The Senior Officer Present

Contents

700.901 The senior officer present.
700.902 Eligibility for command at sea.
700.903 Authority and responsibility.
700.904 Authority of senior officer of the Marine Corps present.
700.922 Shore patrol.
700.923 Precautions for health.
700.924 Medical or dental aid to persons not in the naval service.
700.934 Exercise of power of consul.
700.939 Granting of asylum and temporary refuge.

Subpart J—Precedence, Authority and Command

Authority

700.1020 Exercise of authority.
700.1026 Authority of an officer who succeeds to command.
700.1038 Authority of a sentry.

Detail to Duty

700.1052 Orders to active service.
700.1053 Commander of a task force.
700.1054 Command of a naval base.
700.1055 Command of a naval shipyard.
700.1056 Command of a ship.
700.1057 Command of an air activity.
700.1058 Command of a submarine.
700.1059 Command of a staff corps activity.

Subpart K—General Regulations

Standards of Conduct

700.1101 Demand for court-martial.
700.1113 Endorsement of commercial product or process.
700.1120 Personal privacy and rights of individuals regarding their personal records.

Official Records

700.1121 Disclosure, publication and security of official information.
700.1126 Correction of naval records.
700.1127 Control of official records.
700.1128 Official records in civil courts.

Duties of Individuals

700.1138 Responsibilities concerning marijuana, narcotics, and other controlled substances.
700.1139 Rules for preventing collisions, afloat and in the air.

Rights and Restrictions

700.1162 Alcoholic beverages.
700.1165 Fraternization prohibited.
700.1166 Sexual harassment.
700.1167 Supremacist activity.

Authority: 10 U.S.C. 6011

Subpart A—Navy Regulations

§ 700.101 Origin and history of United States Navy Regulations.

(a) United States Navy Regulations began with the enactment by the Continental Congress of the ''Rules for the Regulation of the Navy of the United Colonies'' on November 28, 1775. The first issuance by the United States Government which covered this subject matter was ''An Act for the Government of the Navy of the United States,'' enacted on March 2, 1799. This was followed the next year by ''An Act for the Better Government of the Navy of the United States.''

(b) In the years preceding the Civil War, twelve successor publications were promulgated under a number of titles by the President, the Navy Department and the Secretary of the Navy. A decision by the Attorney General that the last of the pre-Civil War issuances was invalid led to the inclusion in the 1862 naval appropriations bill of a provision that ''the orders, regulations, and instructions heretofore issued by the Secretary of the Navy be, and they are hereby, recognized as the regulations of the Navy Department, subject, however, to such alterations as the Secretary of the Navy may adopt, with the approbation of the President of the United States.''

(c) Thirteen editions of Navy Regulations were published in accordance with this authority (later codified as Section 1547, Revised Statutes) between 1865 and 1948. The 1973 edition of Navy Regulations was published under authority of 10 United States Code (U.S.C.) 6011, which provided that ''United States Navy Regulations shall be issued by the Secretary of the Navy with the approval of the President.'' In 1981, this provision was amended to eliminate the requirement for presidential approval.

(d) While leaving this provision unaffected, Congress enacted the Goldwater-Nichols Department of Defense Reorganization Act of 1986 (Pub. L. 99–443), which granted each of the service secretaries the authority to prescribe regulations to carry out his or her statutory functions, powers and duties.

§ 700.102 Statutory authority for issuance of United States Navy Regulations.

Title 10, United States Code, section 6011, provides that United States Navy Regulations shall be issued by the Secretary of the Navy. Regulations issued under this authority are permanent regulations of general applicability, as opposed to regulations issued by the Secretary under § 700.104.

§ 700.103 Purpose and effect of United States Navy Regulations.

United States Navy Regulation is the principle regulatory document of the Department of the Navy, endowed with the sanction of law, as to duty, responsibility, authority, distinctions and relationships of various commands, officials and individuals. Other directives issued within the Department of the Navy shall not conflict with, alter or amend any provision of Navy Regulations.

§ 700.104 Statutory authority for prescription of other regulations.

The Secretary of the Navy may prescribe regulations to carry out his or her functions, powers and duties under Title 10, United States Code.

§ 700.105 Issuance of directives by other officers and officials.

Responsible officers and officials of the Department of the Navy may issue, or cause to be issued, directives concerning matters over which they exercise command, control or supervision, which do not conflict with, alter or amend these regulations.

§ 700.106 Control of administrative requirements.

(a) Directives will be issued with due regard for the imposition of workload resulting therefrom and benefits or advantages to be gained. Issuance of new directives will be in accordance with the following:

(1) Directives which implement or amplify directives from higher authority will not be issued unless absolutely essential.

(2) Administrative reporting requirements will not be imposed unless the expected value of the information to be gained is significantly greater than the cumulative burden imposed.

(b) Each officer or official issuing a directive or imposing a reporting requirement will periodically, in accordance with instructions to be issued by appropriate authority, review

such directive or report with a view toward the following:

(1) Reduction of directives by cancellation or consolidation; or

(2) Reduction of reporting requirements by elimination of the report, reduction in the frequency of the report, or combination with other reports.

(c) When issuance of a directive or a tasking will result in imposition of additional administrative requirements on commands not within the chain of command or the issuing authority, the first common superior of the commands affected by the requirement must concur in the issuance.

§ 700.107 Maintenance of Navy Regulations.

(a) The Chief of Naval Operations is responsible for maintaining Navy Regulations, and for ensuring that Navy Regulations conforms to the current needs of the Department of the Navy. When any person in the Department of the Navy deems it advisable that additions, changes or deletions should be made to Navy Regulations, he or she shall forward a draft of the proposed addition, change or deletion, with a statement of the reasons therefor, to the Chief of Naval Operations via the chain of command. The Chief of Naval Operations shall endeavor to obtain the concurrence of the Commandant of the Marine Corps, the Judge Advocate General and appropriate offices and commands. Unresolved issues concerning such additions, changes or deletions shall be forwarded to the Secretary of the Navy for appropriate action. Any additions, changes or deletions to the U.S. Navy Regulations must be approved by the Secretary of the Navy.

(b) Changes to Navy Regulations will be numbered consecutively and issued as page changes. Advance changes may be used when required; these will be numbered consecutively and incorporated in page changes at frequent intervals.

Subpart B—The Department of the Navy

§ 700.201 Origin and authority of the Department of the Navy.

(a) The naval affairs of the country began with the war for independence, the American Revolution. On 13 October 1775, Congress passed legislation for ships. This, in effect, created the continental Navy. Two battalions of Marines were authorized on 10 November 1775. Under the Constitution, the First Congress on 7 August 1789 assigned responsibility for the conduct of naval affairs to the War Department. On 30 April 1798, the Congress established a separate Department of the Navy with the Secretary of the Navy as its chief officer. On 11 July 1798, the United States Marine Corps was established as a separate service, and in 1834 was made a part of the Department of the Navy.

(b) The National Security Act of 1947, as amended, is the fundamental law governing the position of the Department of the Navy in the organization for national defense. In 1949, the Act was amended to establish the Department of Defense as an Executive Department, and to establish the Departments of the Army, Navy and Air Force (formerly established as Executive Departments by the 1947 Act) as military departments within the Department of Defense.

(c) The Goldwater-Nichols Department of Defense Reorganization Act of 1986 further defined the roles of the military departments within the Department of Defense. In addition to establishing the office of Vice Chairman of the Joint Chiefs of Staff, and further emphasizing the operational chain of command, the Act provided detailed statements of the roles of the Secretary of the Navy, the Chief of Naval Operations, the Commandant of the Marine Corps, and their respective principal assistants.

(d) The responsibilities and authority of the Department of the Navy are vested in the Secretary of the Navy, and are subject to reassignment and delegation by the Secretary. The Secretary is bound by the provisions of law, the direction of the President and the Secretary of Defense and, along with all persons in charge of Government agencies, the regulations of certain non-defense agencies addressing their respective areas of functional responsibility.

§ 700.202 Mission of the Department of the Navy.

(a) The Navy, within the Department of the Navy, shall be organized, trained, and equipped primarily for prompt and sustained combat incident to operations at sea. It is responsible for the preparation of naval forces necessary for the effective prosecution of war except as otherwise assigned, and, in accordance with integrated joint mobilization plans, for the expansion of the peacetime components of the Navy to meet the needs of war.

(b) The Navy shall develop aircraft, weapons, tactics, technique, organization and equipment of naval combat and service elements. Matters of joint concern as to these functions shall be coordinated between the Army, the Air Force and the Navy.

(c) The Marine Corps, within the Department of the Navy, shall be organized, trained, and equipped to provide fleet marine forces of combined arms, together with supporting air components, for service with the fleet in the seizure or defense of advanced naval bases and for the conduct of such land operations as may be essential to the prosecution of a naval campaign. In addition, the Marine Corps shall provide detachments and organizations for service on armed vessels of the Navy, shall provide security detachments for the protection of naval property at naval stations and bases, and shall perform such other duties as the President may direct. However, these additional duties may not detract from or interfere with the operations for which the Marine Corps is primarily organized.

(d) The Marine Corps shall develop, in coordination with the Army and the Air Force, those phases of amphibious operations that pertain to the tactics, technique and equipment used by landing forces.

(e) The Marine Corps is responsible, in accordance with integrated joint mobilization plans, for the expansion of peacetime components of the Marine Corps to meet the needs of war.

§ 700.203 Composition.

(a) The Department of the Navy is separately organized under the Secretary of the Navy. It operates under the authority, direction and control of the Secretary of Defense.

(b) The Department of the Navy is composed of the following:

(1) The Office of the Secretary of the Navy;

(2) The Office of the Chief of Naval Operations;

(3) The Headquarters, Marine Corps;

(4) The entire operating forces, including naval aviation, of the Navy and of the Marine Corps, and the reserve components of those operating forces;

(5) All field activities, headquarters, forces, bases, installations, activities and functions under the control or supervision of the Secretary of the Navy; and

(6) The Coast Guard when it is operating as a service in the Navy.

§ 700.204 The principal elements of the Department of the Navy.

(a) The Department of the Navy consists of three elements; the Navy Department, the Operating Forces of the Navy and the Marine Corps, and the Shore Establishment.

(b) The Navy Department refers to the central executive offices of the

Department of the Navy located at the seat of Government. The Navy Department is organizationally comprised of the Office of the Secretary of the Navy, the Office of the Chief of Naval Operations, and the Headquarters, Marine Corps. In addition, the Headquarters, Coast Guard, is included when the Coast Guard is operating as a service in the Navy.

(c) The operating forces of the Navy and the Marine Corps comprise the several fleets, seagoing forces, Fleet Marine Forces, other assigned Marine Corps Forces, the Military Sealift Command and other forces and activities that may be assigned thereto by the President or the Secretary of the Navy.

(d) The shore establishment is comprised of shore activities with defined missions approved for establishment by the Secretary of the Navy.

Subpart C—The Secretary of the Navy

The Secretary of the Navy

§ 700.301 Responsibilities of the Secretary of the Navy.

The Secretary of the Navy is responsible to the Secretary of Defense for:

(a) The functioning and efficiency of the Department of the Navy;

(b) The formulation of policies and programs by the Department of the Navy that are fully consistent with national security objectives and policies established by the President or the Secretary of Defense;

(c) The effective and timely implementation of policy, program and budget decisions and instructions of the President or the Secretary of Defense relating to the functions of the Department of the Navy;

(d) Carrying out the functions of the Department of the Navy so as to fulfill (to the maximum extent practicable) the current and future operational requirement of the unified and specified combatant commands;

(e) Effective cooperation and coordination between the Department of the Navy and the other military departments and agencies of the Department of Defense to provide for more effective, efficient and economical administration and eliminate duplication;

(f) The presentation and justification of the position of the Department of the Navy on the plans, programs and policies of the Department of Defense;

(g) The effective supervision and control of the intelligence activities of the Department of the Navy; and

(h) Such other activities as may be prescribed by law or by the president or Secretary of Defense.

§ 700.302 Responsibilities within the Department of the Navy.

The Secretary is the head of the Department of the Navy. The Secretary is responsible for, and has the authority necessary to conduct, all affairs of the Department of the Navy, including the following functions:

(a) Recruiting;

(b) Organizing;

(c) Supplying;

(d) Equipping (including research and development);

(e) Training;

(f) Servicing;

(g) Mobilizing;

(h) Demobilizing;

(i) Administering (including the morale and welfare of personnel);

(j) Maintaining;

(k) The construction, outfitting and repair of military equipment; and

(l) The construction, maintenance and repair of buildings, and interests in real property necessary to carry out the responsibilities specified in this article.

§ 700.303 Succession.

If the Secretary of the Navy dies, resigns, is removed from office, is absent or is disabled, the person who is highest on the following list, and who is not absent or disabled, shall perform the duties of the Secretary until the President directs another person to perform those duties or until the absence or disability ceases:

(a) The Under Secretary of the Navy;

(b) The Assistant Secretaries of the Navy, in the order prescribed by the Secretary of the Navy and approved by the Secretary of Defense;

(c) The Chief of Naval Operations;

(d) The Commandant of the Marine Corps.

§ 700.304 Recommendations to Congress.

After first informing the Secretary of Defense, the Secretary of the Navy may make such recommendations to Congress relating to the Department of Defense as he or she considers appropriate.

§ 700.305 Assignment of functions.

The Secretary of the Navy may assign such functions, powers, and duties as he or she considers appropriate to the Under Secretary of the Navy and to the Assistant Secretaries of the Navy. Officers of the Navy and the Marine Corps shall, as directed by the Secretary, report on any matter to the Secretary, the Under Secretary or any Assistant Secretary.

§ 700.306 Assignment of duty and titles.

The Secretary of the Navy may:

(a) Assign, detail and prescribe the duties of members of the Navy and Marine Corps and civilian personnel of the Department of the Navy; and

(b) Change the title of any officer or activity of the Department of the Navy not prescribed by law.

§ 700.307 Powers with respect to the Coast Guard.

Whenever the Coast Guard operates as a service in the Navy under Section 3 of Title 14, United States Code, the Secretary of the Navy has the same powers and duties with respect to the Coast Guard as the Secretary of Transportation has when the Coast Guard is not so operating.

The Office of the Secretary of the Navy

§ 700.310 Composition.

The function of the Office of the Secretary of the Navy is to assist the Secretary in carrying out his or her responsibilities. The Office of the Secretary of the Navy is composed of the following:

(a) The Civilian Executive Assistants:

(1) The Under Secretary of the Navy;

(2) The Assistant Secretary of the Navy (Financial Management);

(3) The Assistant Secretary of the Navy (Manpower and Reserve Affairs);

(4) The Assistant Secretary of the Navy (Research, Development and Acquisition);

(5) The Assistant Secretary of the Navy (Installations and Environment); and

(6) The General Counsel of the Department of the Navy.

(b) The Staff Assistants:

(1) The Judge Advocate General of the Navy;

(2) The Naval Inspector General;

(3) The Chief of Naval Research;

(4) The Chief of Information;

(5) The Chief of Legislative Affairs;

(6) The Auditor General of the Navy;

(7) The Director, Office of Program Appraisal; and

(8) Such other officers and officials as may be established by law or as the Secretary of the Navy may establish or designate.

§ 700.311 Sole responsibilities.

(a) The Office of the Secretary of the Navy shall have sole responsibility within the Office of the Secretary of the Navy, the Office of the Chief of Naval Operations and the Headquarters, Marine Corps, for the following functions:

(1) Acquisition;

(2) Auditing;

(3) Comptroller (including financial management);

(4) Information management;
(5) Inspector general;
(6) Legislative affairs;
(7) Public affairs;
(8) Research and development, except for military requirements and operational test and evaluation, which are the responsibilities of the Office of the Chief of Naval Operations and the Headquarters Marine Corps.

(b) The following offices within the Office of the Secretary of the Navy are designated to conduct the functions specified in paragraph (a) of this section. No office or other entity may be established or designated within the Office of the Chief of Naval Operations or the Headquarters, Marine Corps, to conduct any of the functions specified in paragraph (a) of this section, except as noted in paragraph (a)(8) of this section.

(1) The Assistant Secretary of the Navy (Research, Development and Acquisition) is the Acquisition Executive for the Department of the Navy. The Assistant Secretary of the Navy (Research, Development and Acquisition) (ASN(RD&A)) is responsible for research, development and acquisition, except for military requirements and operational test and evaluation, which remain functions of the Office of the Chief of Naval Operations and Headquarters Marine Corps. In addition to Acquisition Executive, ASN(RD&A) is also the Navy Senior Procurement Executive and Senior Department of the Navy Information Resource Management Official. Responsibilities include developing acquisition policy and procedures for all Department of the Navy research, development, production, shipbuilding and production/logistics support programs; and Department of the Navy international technology transfer.

(2) The Auditor General is responsible for the internal auditing function within the Department of the Navy.

(3) The Assistant Secretary of the Navy (Financial Management) is responsible for comptrollership, including financial management, within the Department of the Navy.

(4) The Naval Inspector General is responsible for the inspector general function within the Department of the Navy.

(5) The Chief of Legislative Affairs is responsible for legislative affairs within the Department of the Navy.

(6) The Chief of Information is responsible for public affairs within the Department of the Navy.

(c) The Secretary shall:

(1) Prescribe the relationship of each office or other entity established or designated under paragraph (b) of this section:

(i) To the Chief of Naval Operations and the Office of the Chief of Naval Operations: and

(ii) To the Commandant of the Marine Corps and the Headquarters, Marine Corps; and

(2) Ensure that each such office or entity provides the Chief of Naval Operations and the Commandant of the Marine Corps such staff support as the Chief of Naval Operations and the Commandant of the Marine Corps consider necessary to perform their respective duties and responsibilities.

(d) The vesting in the Office of the Secretary of the Navy of the responsibility for the conduct of a function specified in paragraph (a) of this section does not preclude other elements of the Department of the Navy (including the Office of the Chief of Naval Operations and the Headquarters, Marine Corps) from providing advice or assistance to the Chief of Naval Operations and the Commandant of the Marine Corps, or otherwise participating in that function within the executive part of the Department under the direction of the office assigned responsibility for that function in the Office of the Secretary of the Navy.

§ 700.312 Authority over organizational matters.

Subject to the approval or guidance of the Secretary of the Navy, the Civilian Executive Assistants, the Chief of Naval Operations, the Commandant of the Marine Corps and the Staff Assistants are individually authorized to organize, assign and reassign responsibilities within their respective commands or offices, including the establishment and disestablishment of such component organizations as may be necessary, subject to the following:

(a) The authority to disestablish may not be exercised with respect to any organizational component of the Department established by law.

(b) The Secretary retains the authority to approve the establishment and disestablishment of shore activities.

The Office of the Secretary of the Navy/ The Civilian Executive Assistants

§ 700.320 The Civilian Executive Assistants.

(a) The Civilian Executive Assistants, as identified in § 700.310, are assigned department-wide responsibilities essential to the efficient administration of the Department of the Navy.

(b) Each Civilian Executive Assistants, within his or her assigned area of responsibility, is the principal civilian advisor and assistant to the Secretary on the administration of the affairs of the Department of the Navy. The Civilian Executive Assistants carry out their duties with the professional assistance of the Office of the Chief of Naval Operations and Headquarters, Marine Corps, as presided over by the Chief of Naval Operations and Commandant of the Marine Corps, respectively.

(c) The Civilian Executive Assistants are authorized and directed to act for the Secretary within their assigned areas of responsibility.

§ 700.321 The Under Secretary of the Navy.

(a) The Under Secretary of the Navy shall perform such duties and exercise such powers as the Secretary of the Navy shall prescribe.

(b) The Under Secretary of the Navy is designated as the deputy and principal assistant to the Secretary of the Navy. The Under Secretary of the Navy acts with full authority of the Secretary in the general management of the Department of the Navy and supervision of offices, organizations and functions as assigned by the Secretary.

§ 700.322 Assistant Secretaries of the Navy; statutory authorization.

There are four Assistant Secretaries of the Navy. The Assistant Secretaries shall perform such duties and exercise such powers as the Secretary of the Navy may prescribe in accordance with law.

§ 700.323 The Assistant Secretary of the Navy (Financial Management).

The Assistant Secretary of the Navy (Financial Management) is the Comptroller of the Navy, and is responsible for all matters related to the financial management of the Department of the Navy, including:

(a) Budgeting;
(b) Accounting;
(c) Disbursing;
(d) Financing;
(e) Internal review;
(f) Progress and statistical reporting; and
(g) Supervision of offices and organizations as assigned by the Secretary of the Navy.

§ 700.324 The Assistant Secretary of the Navy (Manpower and Reserve Affairs).

The Assistant Secretary of the Navy (Manpower and Reserve Affairs) is responsible for:

(a) The overall supervision of manpower and reserve component affairs of the Department of the Navy, including policy and administration of affairs related to military (active and inactive) and civilian personnel; and

(b) Supervision of offices and organizations as assigned by the

Secretary, specifically the Naval Council of Personnel Boards and the Board for Correction of Naval Records.

§ 700.325 The Assistant Secretary of the Navy (Installations and Environment).

The Assistant Secretary of the Navy (Installations and Environment) is responsible for:

(a) Policy relating to Navy installations, facilities, environment, safety, shore resources management and quality improvement;

(b) Development, implementation and evaluation of military construction, facilities management and engineering, strategic homeporting, housing, utilities, and base utilization issues;

(c) Environmental policy, safety, occupational health, and Marine Corps and Navy environmental affairs, including environmental protection, restoration, compliance and legislation, natural resource programs, hazardous material/waste minimization, plastics reduction and control, afloat environmental issues, state and federal agency and environmental organization coordination, and the National Environmental Policy Act; and

(d) Advising on fiscal resources related to shore appropriations.

§ 700.326 The Assistant Secretary of the Navy (Research, Development and Acquisition).

The Assistant Secretary of the Navy (Research, Development and Acquisition) is responsible for:

(a) Research, development and acquisition, except for military requirements and operational test and evaluation;

(b) Direct management of acquisition programs;

(c) All aspects of the acquisition process within the Department of the Navy;

(d) All acquisition policy, including technology base and advanced technology development, procurement, competition, contracts and business management, logistics, product integrity, and education and training of the acquisition workforce.

§ 700.327 The General Counsel of the Navy.

(a) The General Counsel is head of the Office of the General Counsel and is responsible for providing legal advice, counsel, and guidance within the Department of the Navy on the following matters:

(1) Business and commercial law, environmental law, civilian personnel law, real and personal property law and patent law;

(2) Procurement of services, including the fiscal, budgetary and accounting aspects, for the Navy and Marine Corps;

(3) Litigation involving the issues enumerated above; and

(4) Other matters as directed by the Secretary of the Navy.

(b) The General Counsel maintains a close working relationship with the Judge Advocate General on all matters of common interest.

The Office of the Secretary of the Navy/ The Staff Assistants

§ 700.330 The Staff Assistants.

The Staff Assistants, as identified in § 700.310, assist the Secretary of the Navy, or one or more of the Civilian Executive Assistants, in the administration of the Navy. They supervise all functions and activities internal to their offices and assigned field activities, if any, and are responsible to the Secretary or to one of the Civilian Executive Assistants for the utilization of resources by, and the operating efficiency of, all activities under their supervision or command. Their duties are as provided by law or as assigned by the Secretary.

§ 700.331 The Judge Advocate General.

(a) The Judge Advocate General of the Navy commands the Office of the Judge Advocate General and is the Chief of the Judge Advocate General's Corps. The Judge Advocate General:

(1) Provides or supervises the provision of all legal advice and related services throughout the Department of the Navy, except for the advice and services provided by the General Counsel;

(2) Performs the functions required or authorized by law;

(3) Provides legal and policy advice to the Secretary of the Navy on military justice, administrative law, claims, operational and international law, and litigation involving these issues; and

(4) Acts on other matters as directed by the Secretary.

(b) The Judge Advocate General maintains a close working relationship with the General Counsel on all matters of common interest.

§ 700.332 The Naval Inspector General.

(a) Under the direction of the Secretary of the Navy, the Naval Inspector General:

(1) Inspects, investigates or inquires into any and all matters of importance to the Department of the Navy with particular emphasis on readiness, including, but not limited to effectiveness, efficiency, economy and integrity;

(2) Exercises broad supervision, general guidance and coordination for all Department of the Navy inspection, evaluation and appraisal organizations to minimize duplication of efforts and the number of necessary inspections;

(3) Through analysis of available information, identifies areas of weakness in the Department of the Navy as they relate to matters of integrity and efficiency and provides appropriate recommendations for improvement. To accomplish these functions, the Inspector General shall have unrestricted access, by any means, to any information maintained by any naval activity deemed necessary, unless specifically restricted by the Secretary of the Navy;

(4) Receives allegations of inefficiency, misconduct, impropriety, mismanagement or violations of law, and investigates or refers such matters for investigation, as is appropriate; and

(5) Serves as principal advisor to the Secretary of the Navy, the Chief of Naval Operations and the Commandant of the Marine Corps on all inspection and investigation matters.

(b) In addition, the Naval Inspector General has various functions, including (but not limited to):

(1) Providing of an alternative to the normal chain of command channel for receipt of complaints of personnel;

(2) Serving as the official to whom employees may complain without fear of reprisal;

(3) Cooperating with the Inspector General, Department of Defense;

(4) Providing oversight of intelligence and special activities;

(5) Serving as the Department of the Navy coordinator for fraud, waste and efficiency matters;

(6) Serving as Navy Program Manager and focal point for the Department of the Navy and Navy Hotline programs; and

(7) Designation as the centralized organization within the Department of Defense to monitor and ensure the coordination of criminal, civil, administrative and contractual remedies for all significant cases, including investigation of fraud or corruption related to procurement activities affecting the Department of the Navy.

§ 700.333 The Chief of Naval Research.

(a) The Chief of Naval Research shall command the Office of the Chief of Naval Research, the Office of Naval Research, the Office of Naval Technology and assigned shore activities.

(b) The Office of Naval Research shall perform such duties as the Secretary of the Navy prescribes relating to:

(1) The encouragement, promotion, planning, initiation and coordination of naval research;

(2) The conduct of naval research in augmentation of and in conjunction with the research and development conducted by other agencies and offices of the Department of the Navy; and

(3) The supervision, administration and control of activities within or for the Department of the Navy relating to patents, inventions, trademarks, copyrights and royalty payments, and matters connected therewith.

§ 700.334 The Chief of Information.

(a) The Chief of Information is the direct representative of the Secretary of the Navy in all public affairs and internal relations matters. The Chief of Information is authorized to implement Navy public affairs and internal relations policies and to coordinate those Navy and Marine Corps activities of mutual interest.

(b) The Chief of Naval Operations and the Commandant of the Marine Corps are delegated responsibilities for:

(1) Conduct of their respective services' internal information programs;

(2) Conduct of their respective services' community relations programs; and

(3) Implementing the Secretary of the Navy's public affairs policy and directives.

(c) The Chief of Information will report to the Chief of Naval Operations for support of the responsibilities outlined in paragraph (b) of this section, and will provide such staff support as the Chief of Naval Operations considers necessary to perform those duties and responsibilities.

(d) The Deputy Chief of Information for Marine Corps Matters may report directly to the Secretary regarding public information matters related solely to the Marine Corps. The Deputy Chief will promptly inform the Chief of Information regarding the substance of all independent contacts with the Secretary pertaining to Marine Corps matters. The Deputy Chief of Information for Marine Corps Matters will report to the Commandant of the Marine Corps for support of the responsibilities outlined in paragraph (b) of this section, and will provide such staff support as the Commandant considers necessary to perform those duties and responsibilities.

§ 700.335 The Chief of Legislative Affairs.

The mission of the Chief of Legislative Affairs is to:

(a) Plan, develop and coordinate relationships between representatives of the Department of the Navy and members of committees of the United States Congress and their staffs which are necessary in the transaction of official Government business (except appropriations matters) affecting the Department of the Navy; and

(b) Furnish staff support, advice and assistance to the Secretary of the Navy, the Chief of Naval Operations, the Commandant of the Marine Corps and all other principal civilian and military officials of the Department of the Navy concerning congressional aspects of the Department of the Navy policies, plans and programs (except appropriations matters).

§ 700.336 The Director, Office of Program Appraisal.

(a) The Director, Office of Program Appraisal, directs, under the immediate supervision of the Secretary of the Navy, the Office of Program Appraisal.

(b) The Office of Program Appraisal will assist the Secretary in assuring that existing and proposed Navy and Marine Corps programs provide the optimum means of achieving the objectives of the Department of the Navy.

§ 700.337 The Auditor General.

(a) The Auditor General of the Navy is responsible for:

(1) Serving as Director of the Naval Audit Service; and

(2) Developing and implementing Navy internal audit policies, programs and procedures within the framework of Government auditing standards.

(b) The Auditor General can provide information and may provide assistance and support to the Chief of Naval Operations and the Commandant of the Marine Corps to enable them to discharge their duties and responsibilities.

Subpart D—The Chief of Naval Operations

§ 700.401 Precedence.

The Chief of Naval Operations, while so serving, has the grade of admiral. In the performance of duties within the Department of the Navy, the Chief of Naval Operations takes precedence above all other officers of the naval service, except an officer of the naval service who is serving as Chairman or Vice Chairman of the Joint Chiefs of Staff.

§ 700.402 Succession.

When there is a vacancy in the position of Chief of Naval Operations, or during the absence or disability of the Chief of Naval Operations:

(a) The Vice Chief of Naval Operations shall perform the duties of the Chief of Naval Operations until a successor is appointed or the absence or disability ceases.

(b) If there is a vacancy in the position of Vice Chief of Naval Operations or the Vice Chief of Naval Operations is absent or disabled, unless the President directs otherwise, the most senior officer of the Navy in the Office of the Chief of Naval Operations who is not absent or disabled and who is not restricted in the performance of duty shall perform the duties of the Chief of Naval Operations until a successor to the Chief of Naval Operations or the Vice Chief of Naval Operations is appointed or until the absence or disability of the Chief of Naval Operations or Vice Chief of Naval Operations ceases, whichever occurs first.

§ 700.403 Statutory authority and responsibility of the Chief of Naval Operations.

(a) Except as otherwise prescribed by law, and subject to the statutory authority of the Secretary of the Navy to assign functions, powers and duties, the Chief of Naval Operations performs duties under the authority, direction and control of the Secretary of the Navy and is directly responsible to the Secretary.

(b) Subject to the authority, direction and control of the Secretary of the Navy, the Chief of Naval Operations shall:

(1) Preside over the Office of the Chief of Naval Operations;

(2) Transmit the plans and recommendations of the Office of the Chief of Naval Operations to the Secretary and advise the Secretary with regard to such plans and recommendations;

(3) After approval of the plans or recommendations of the Office of the Chief of Naval Operations by the Secretary, act as the agent of the Secretary in carrying them into effect;

(4) Exercise supervision, consistent with the statutory authority assigned to commanders of unified or specified combatant commands, over such of the members and organizations of the Navy and the Marine Corps as the Secretary determines;

(5) Perform the duties prescribed for a member of the Armed Forces Policy Council and other statutory duties; and

(6) Perform such other military duties, not otherwise assigned by law, as are assigned to the Chief of Naval Operations by the President, the Secretary of Defense or the Secretary of the Navy.

(c) The Chief of Naval Operations shall also perform the statutory duties prescribed for a member of the Joint Chiefs of Staff.

(1) To the extent that such action does not impair the independence of the

Chief of Naval Operations in the performance of duties as a member of the Joint Chiefs of Staff, the Chief of Naval Operations shall inform the Secretary of the Navy regarding military advice rendered by members of the Joint Chiefs of Staff on matters affecting the Department of the Navy.

(2) Subject to the authority, direction and control of the Secretary of Defense, the Chief of Naval Operations shall keep the Secretary of the Navy fully informed of significant military operations affecting the duties and responsibilities of the Secretary of the Navy.

§ 700.404 Statutory authority and responsibility of the Office of the Chief of Naval Operations.

(a) The Office of the Chief of Naval Operations shall furnish professional assistance to the Secretary, the Under Secretary and the Assistant Secretaries of the Navy, and to the Chief of Naval Operations. Under the authority, direction and control of the Secretary of the Navy, the Office of the Chief of Naval Operations shall:

(1) Subject to § 700.311(a), prepare for such employment of the Navy, and for such recruiting, organizing, supplying, equipping (including those aspects of research and development assigned by the Secretary of the Navy), training, servicing, mobilizing, demobilizing, administering, and maintaining of the Navy, as will assist in the execution of any power, duty or function of the Secretary or the Chief of Naval Operations;

(2) Investigate and report upon the efficiency of the Navy and its preparation to support military operations by combatant commands;

(3) Prepare detailed instructions for the execution of approved plans and supervise the execution of those plans and instructions;

(4) As directed by the Secretary or the Chief of Naval Operations, coordinate the action of organizations of the Navy; and

(5) Perform such other duties, not otherwise assigned by law, as may be prescribed by the Secretary.

(b) Except as otherwise specifically prescribed by law, the Office of the Chief of Naval Operations shall be organized in such manner, and its members shall perform such duties and have such titles as the Secretary may prescribe.

§ 700.405 Delegated authority and responsibility.

(a) The Chief of Naval Operations is the principal naval advisor and naval executive to the Secretary of the Navy on the conduct of the naval activities of the Department of the Navy.

(b)(1) Internal to the administration of the Department of the Navy, the Chief of Naval Operations, consistent with the statutory authority assigned to commanders of unified or specified combatant commands, under the direction of the Secretary of the Navy, shall command:

(i) The operating forces of the Navy; and

(ii) Such shore activities as may be assigned by the Secretary.

(2) The Chief of Naval Operations shall be responsible to the Secretary of the Navy for the Utilization of resources by, and the operating efficiency of, the Office of the Chief of Naval Operations, the Operating Forces of the Navy and assigned shore activities.

(c) In addition, the Chief of Naval Operations has the following specific responsibilities:

(1) To organize, train, equip, prepare and maintain the readiness of Navy forces, including those for assignment to unified or specified commands, for the performance of military missions as directed by the President, the Secretary of Defense or the Chairman of the Joint Chiefs of Staff;

(2) To determine current and future requirements of the Navy (less Fleet Marine Forces and other assigned Marine Corps forces) for manpower, material, weapons, facilities and services, including the determination of quantities, military performance requirements and times, places and priorities of need;

(3) To exercise leadership in maintaining a high degree of competence among Navy officer, enlisted and civilian personnel in necessary fields of specialization, through education training and equal opportunities for personal advancement, and maintaining the morale and motivation of Navy personnel and the prestige of a Navy career;

(4) To plan and provide health care for personnel of the naval service, their dependents and eligible beneficiaries;

(5) To direct the organization, administration, training and support of the Naval Reserve;

(6) To inspect and investigate components of the Department of the Navy to determine and maintain efficiency, discipline, readiness, effectiveness and economy, except in those areas where such responsibility rests with the Commandant of the Marine Corps;

(7) To determine the requirements of naval forces and activities, to include requirements for research, development, test, and evaluation to plan and provide for the conduct of test and evaluation which are adequate and responsive to long range objectives, immediate requirements, and fiscal limitations; and to provide assistance to the Assistant Secretary of the Navy (Research, Development and Acquisition) in the review and appraisal of the overall Navy program to ensure fulfillment of stated requirements;

(8) To formulate Navy strategic plans and policies and participate in the formulation of Joint and combined strategic plans and policies and related command relationships; and

(9) Subject to guidance from the Assistant Secretary of the Navy (Financial Management), to formulate budget proposals for the Office of the Chief of Naval Operations, the Operating Forces of the Navy and assigned shore activities, and other activities and programs as assigned.

(d) The Chief of Naval Operations, under the direction of the Secretary of the Navy, shall exercise overall authority throughout the Department of the Navy in matters related to:

(1) The effectiveness of the support of the Operating Forces of the Navy and assigned shore activities;

(2) The coordination and direction of assigned Navy wide programs and functions, including those assigned by higher authority;

(3) Matters essential to naval military administration, such as:

(i) Security;

(ii) Intelligence;

(iii) Discipline;

(iv) Communications; and

(v) Matters related to the customs and traditions of the naval service;

(4) Except for those areas wherein such responsibility rests with the Commandant of the Marine Corps, the coordination of activities of the Department of the Navy in matters concerning effectiveness, efficiency and economy.

§ 700.406 Naval Vessel Register, classification of naval craft, and status of ships and service craft.

(a) The Chief of Naval Operations shall be responsible for the Naval Vessel Register (except the Secretary of the Navy shall strike vessels from the Register) and the assignment of classification for administrative purposes to water borne craft and the designation of status for each ship and service craft.

(b) Commissioned vessels and craft shall be called ''United States Ship'' or ''U.S.S.''

(c) Civilian manned ships, of the Military Sealift Command or other commands, designated ''active status, in service'' shall be called ''United States Naval Ship'' or ''U.S.N.S.''

(d) Ships and service craft designated ''active status, in service,'' except those described by paragraph (c) of this section, shall be referred to by name, when assigned, classification, and hull number (e.g., ''HIGHPOINT PCH–1'' or ''YOGN–8'').

(e) The Chief of Naval Operations shall designate hospital ships and medical aircraft as he or she deems necessary. Such designation shall be in compliance with the Geneva Convention for the Amelioration of the Conditions of Wounded, Sick and Ship wrecked Members of the Armed Forces at Sea of 12 August 1949. The Chief of Naval Operations shall ensure compliance with the notice shall ensure compliance with the notice provisions of that Convention.

Subpart E—The Commandant of the Marine Corps

§ 700.501 Precedence.

The Commandant of the Marine Corps, while so serving, has the grade of general. In the performance of duties within the Department of the Navy, the Commandant of the Marine Corps takes precedence above all other officers of the Marine Corps, except an officer of the Marine Corps who is serving as Chairman or Vice Chairman of the Joint Chiefs of Staff.

§ 700.502 Succession.

When there is a vacancy in the office of Commandant of the Marine Corps, or during the absence or disability of the Commandant:

(a) The Assistant Commandant of the Marine Corps shall perform the duties of the Commandant until a successor is appointed or the absence or disability ceases; or

(b) If there is a vacancy in the office of the Assistant Commandant of the Marine Corps or the Assistant Commandant is absent or disabled, unless the President directs otherwise, the most senior officer of the Marine Corps in the Headquarters, Marine Corps, who is not absent or disabled and who is not restricted in the performance of duty shall perform the duties of the Commandant until a successor to the Commandant or the Assistant Commandant is appointed or until the absence or disability of the Commandant or the Assistant Commandant ceases, whichever occurs first.

§ 700.503 Statutory authority and responsibility of the Commandant of the Marine Corps.

(a) Except as otherwise prescribed by law and subject to the statutory authority of the Secretary of the Navy to assign functions, powers and duties, the Commandant of the Marine Corps performs duties under the authority, direction and control of the Secretary of the Navy and is directly responsible to the Secretary.

(b) Subject to the authority, direction and control of the Secretary of the Navy, the Commandant of the Marine Corps shall:

(1) Preside over the Headquarters, Marine Corps;

(2) Transmit the plans and recommendations of the Headquarters, Marine Corps, to the Secretary and advise the Secretary with regard to such plans and recommendations;

(3) After approval of the plans or recommendations of the Headquarters, Marine Corps, by the Secretary, act as the agent of the Secretary in carrying them into effect;

(4) Exercise supervision, consistent with the statutory authority assigned to commanders of unified or specified combatant commands, over such of the members and organizations of the Navy and the Marine Corps as the Secretary determines;

(5) Perform the duties prescribed for a member of the Armed Forces Policy Council and other statutory duties; and

(6) Perform such other military duties, not otherwise assigned by law, as are assigned to the Commandant of the Marine Corps by the President, the Secretary of Defense or the Secretary of the Navy.

(c) The Commandant of the Marine Corps shall also perform the statutory duties prescribed for a member of the Joint Chiefs of Staff.

(1) To the extent that such action does not impair the independence of the Commandant of the Marine Corps in the performance of duties as a member of the Joint Chiefs of Staff, the Commandant of the Marine Corps shall inform the Secretary of the Navy regarding military advice rendered by members of the Joint Chiefs of Staff on matters affecting the Department of the Navy.

(2) Subject to the authority, direction and control of the Secretary of Defense, the Commandant of the Marine Corps shall keep the Secretary of the Navy fully informed of significant military operations affecting the duties and responsibilities of the Secretary of the Navy.

§ 700.504 Statutory authority and responsibility of the Headquarters, Marine Corps.

(a) The Headquarters, Marine Corps, shall furnish professional assistance to the Secretary, the Under Secretary and the Assistant Secretaries of the Navy, and to the Commandant of the Marine Corps.

(1) Under the authority, direction and control of the Secretary of the Navy, the Headquarters, Marine Corps shall:

(i) Subject to § 700.311(a), prepare for such employment of the Marine Corps, and for such recruiting, organizing, supplying, equipping (including those aspects of research and development assigned by the Secretary of the Navy), training, servicing, mobilizing, demobilizing, administering, and maintaining of the Marine Corps, as will assist in the execution of any power, duty or function of the Secretary or the Commandant;

(ii) Investigate and report upon the efficiency of the Marine Corps and its preparation to support military operations by combatant commands;

(iii) Prepare detailed instructions for the execution of approved plans and supervise the execution of those plans and instructions;

(iv) As directed by the Secretary or the Commandant, coordinate the action of organizations of the Marine Corps; and

(v) Perform such other duties, not otherwise assigned by law, as may be prescribed by the Secretary.

(2) [Reserved]

(b) Except as otherwise specifically prescribed by law, the Headquarters, Marine Corps, shall be organized in such manner, and its members shall perform such duties and have such titles, as the Secretary may prescribe.

§ 700.505 Delegated authority and responsibility.

(a)(1) Internal to the administration of the Department of the Navy, the Commandant of the Marine Corps, consistent with the statutory authority assigned to commanders of unified or specified combatant commands, under the direction of the Secretary of the Navy, shall command:

(i) The operating forces of the Marine Corps; and

(ii) Such shore activities as may be assigned by the Secretary.

(2) The Commandant shall be responsible to the Secretary of the Navy for the utilization of resources by, and the operating efficiency of, all commands and activities under such command.

(b) In addition, the Commandant has the following specific responsibilities:

(1) To plan for and determine the needs of the Marine Corps for equipment, weapons or weapons systems, materials, supplies, facilities, maintenance, and supporting services. This responsibility includes the determination of Marine Corps

characteristics of equipment and material to be procured or developed, and the training required to prepare Marine Corps personnel for combat. It also includes the operation of the Marine Corps Material Support System.

(2) Subject to guidance from the Assistant Secretary of the Navy (Financial Management), to formulate budget proposals for the Headquarters, Marine Corps, the Operating Forces of the Marine Corps, and other activities and programs as assigned.

(3) To develop, in coordination with other military services, the doctrines, tactics and equipment employed by landing forces in amphibious operations.

(4) To formulate Marine Corps strategic plans and policies and participate in the formulation of joint and combined strategic plans and policies and related command relationships.

(5) To plan for and determine the present and future needs, both quantitative and qualitative, for manpower, including reserve personnel and civilian personnel, of the United States Marine Corps. This includes responsibility for leadership in maintaining a high degree of competence among Marine Corps officer and enlisted personnel and Marine Corps civilian personnel in necessary fields of specialization through education, training and equal opportunities for personal advancement; and for leadership in maintaining the morale and motivation of Marine Corps personnel and the prestige of a career in the Marine Corps.

Subpart F—The United States Coast Guard (When Operating as a Service in the Navy)

§ 700.601 Relationship and operation as a service in the Navy.

(a) Upon the declaration of war or when the President directs, the Coast Guard shall operate as a service in the Navy, and shall be subject to the orders of the Secretary of the Navy. While so operating as a service in the Navy, and to the extent practicable, Coast Guard operations shall be integrated and uniform with Navy operation.

(b) Whenever the Coast Guard operates as a service in the Navy:

(1) Applicable appropriations of the Coast Guard to cover expenses shall be available for transfer to the Department of the Navy and supplemented, as required, from applicable appropriations of the Department of the Navy;

(2) Personnel of the Coast Guard shall be eligible to receive gratuities, medals and other insignia of honor on the same basis as personnel in the naval service or serving in any capacity with the Navy; and

(3) To the extent practicable, Coast Guard personnel, ships, aircraft and facilities will be utilized as organized Coast Guard units.

§ 700.602 The Commandant of the Coast Guard.

(a) The Commandant of the Coast Guard is the senior officer of the United States Coast Guard.

(b) When reporting to the Secretary of the Navy, the Commandant will report to the Chief of Naval Operations.

(c) The Chief of Naval Operations shall represent the Coast Guard before the Joint Chiefs of Staff.

§ 700.603 Duties and responsibilities.

In exercising command over the Coast Guard while operating as a service of the Navy, the Commandant shall:

(a) Organize, train, prepare and maintain the readiness of the Coast Guard to function as a specialized service in the Navy for the performance of national defense missions, as directed;

(b) Plan for and determine the present and future needs of the Coast Guard, both quantitative and qualitative, for personnel, including reserve personnel;

(c) Budget for the Coast Guard, except as may be otherwise directed by the Secretary of the Navy;

(d) Plan for and determine the support needs of the Coast Guard for equipment, materials, weapons or combat systems, supplies, facilities, maintenance and supporting services;

(e) Exercise essential military administration of the Coast Guard. This includes, but is not limited to, such matters as discipline, communications, personnel records and accounting, conforming, as practicable, to Navy procedures;

(f) In conjunction with the Director of Naval Intelligence, and the National Intelligence Community, where appropriate, establish and maintain an intelligence and security capability to provide support for the maritime defense zones, port security, narcotics interdiction, anti-terrorist activity, fishery activity, pollution monitoring and other Coast Guard missions;

(g) Enforce or assist in enforcing Federal laws on and under the high seas and waters subject to the jurisdiction of the United States;

(h) Administer, promulgate and enforce regulations for the promotion of safety of life and property on and under the high seas and waters subject to the jurisdiction of the United States. This applies to those matters not specifically delegated by law to some other executive department;

(i) Develop, establish, maintain and operate, with due regard to the requirements of national defense, aids to maritime navigation, ice breaking facilities, for the promotion of safety on, under and over the high seas and waters subject to the jurisdiction of the United States;

(j) Engage in oceanographic surveys in conjunction with the Office of the Oceanographer of the Navy; and

(k) Continue in effect under the Secretary of the Navy those other functions, powers and duties vested in the Commandant by appropriate orders and regulations of the Secretary of Transportation on the day prior to the effective date of transfer of the Coast Guard to the Department of the Navy until specifically modified or terminated by the Secretary of the Navy.

Subpart G—Commanders In Chief and Other Commanders

Titles and Duties of Commanders

§ 700.701 Titles of Commanders.

(a) The commander of a principal organization of the operating forces of the Navy, as determined by the chief of Naval Operations, or the officer who has succeeded to such command as provided elsewhere in these regulations, shall have the title ''Commander in Chief.'' The name of the organization under the command of such an officer shall be added to form his or her official title.

(b) The commander of each other organization of units of the operating forces of the Navy or marine corps, or organization of units of shore activities, shall have the title ''Commander,'' ''Commandant,'' ''Commanding General'' or other appropriate title. The name of the organization under the command of such an officer shall be added to form his or her official title.

§ 700.702 Responsibility and authority of commanders.

(a) Commanders shall be responsible for the satisfactory accomplishment of the mission and duties assigned to their commands. Their authority shall be commensurate with their responsibilities. Normally, commanders shall exercise authority through their immediate subordinate commanders, but they may communicate directly with any of their subordinates.

(b) Commanders shall ensure that subordinate commands are fully aware of the importance of strong, dynamic leadership and its relationship to the overall efficiency and readiness of naval

forces. Commanders shall exercise positive leadership and actively develop the highest qualities of leadership in persons with positions of authority and responsibility throughout their commands.

(c) Subject to orders of higher authority, and subject to the provisions of § 700.106 of these regulations, commanders shall issue such regulations and instructions as may be necessary for the proper administration of their commands.

(d) Commanders shall hold the same relationship to their flagships, or to shore activities of the command in which their headquarters may be located, in regard to internal administration and discipline, as to any other ship or shore activity of their commands.

§ 700.703 To announce assumption of command.

(a) Upon assuming command, commanders shall so advise appropriate superiors, and the units of their commands.

(b) When appropriate, commanders shall also advise the following officers and officials located within the area encompassed by the command concerning their assumption of command.

(1) Senior commanders of other United States armed services;

(2) Officials of other federal agencies; and

(3) Officials of foreign governments.

§ 700.704 Readiness.

Commanders shall take all practicable steps to maintain their commands in a state of readiness to perform their missions. In conformity with the orders and policies of higher authority, they shall:

(a) Organize the forces and resources under their command and assign duties to their principal subordinate commanders;

(b) Prepare plans for the employment of their forces to meet existing and foreseeable situations;

(c) Collaborate with the commanders of other United States armed services and with appropriate officials of other federal agencies and foreign governments located within the area encompassed by their commands;

(d) Maintain effective intelligence and keep themselves informed of the political and military aspects of the national and international situation;

(e) Make, or cause to be made, necessary inspections to ensure the readiness, effectiveness and efficiency of the components of their commands; and

(f) Develop, in accordance with directives issued by higher authority, training strategies and plans for their commands.

§ 700.705 Observance of international law.

At all times, commanders shall observe, and require their commands to observe, the principles of international law. Where necessary to fulfill this responsibility, a departure from other provisions of Navy Regulations is authorized.

§ 700.706 Keeping immediate superiors informed.

Commanders shall keep their immediate superiors appropriately informed of:

(a) The organization of their commands, the prospective and actual movements of the units of their commands, and the location of their headquarters;

(b) Plans for employment of their forces;

(c) The condition of their commands and of any required action pertaining thereto which is beyond their capacity or authority;

(d) Intelligence information which may be of value;

(e) Any battle, engagement or other significant action involving units of their commands;

(f) Any important service or duty performed by persons or units of their commands; and

(g) Unexecuted orders and matters of interest upon being relieved of command.

Staffs of Commanders

§ 700.710 Organization of a staff.

(a) The term ''staff'' means those officers and other designated persons assigned to a commander to assist him or her in the administration and operation of his or her command.

(b) The officer detailed as chief of staff and aide to a fleet admiral or admiral normally shall be a vice admiral or a rear admiral. The officer detailed as chief of staff and aide to a vice admiral or rear admiral shall normally be a rear admiral or a captain. The detailing of a vice commander or a deputy to a commander shall be reserved for selected commanders. An officer detailed as chief staff officer to another officer shall normally not be of the same grade as that officer.

(c) The staff shall be organized into such divisions as may be prescribed by the commander concerned or by higher authority. These divisions shall conform in nature and designation, as practicable and as appropriate, to those of the staffs of superiors.

(d) The staff of a flag or general officer may include one or more personal aides.

§ 700.711 Authority and responsibilities of officers of a staff.

(a) The chief of staff and aide or chief staff officer, under the commander, shall be responsible for supervising and coordinating the work of the staff and shall be kept informed of all matters pertaining to that work. All persons attached to the staff, except a vice commander or deputy responsible directly to the commander shall be subordinate to the chief of staff and aide or chief staff officer while he or she is executing the duties of that office.

(b) The officers of a staff shall be responsible for the performance of those duties assigned to them by the commander and shall advise the commander on all matters pertaining thereto. In the performance of their staff duties they shall have no command authority of their own. In carrying out such duties, they shall act for, and in the name of, the commander.

Administration and Discipline

§ 700.720 Administration and discipline: Staff embarked.

In matters of general discipline, the staff of a commander embarked and all enlisted persons serving with the staff shall be subject to the internal regulations and routine of the ship. They shall be assigned regular stations for battle and emergencies. Enlisted persons serving with the staff shall be assigned to the ship for administration and discipline, except in the case of a staff embarked for passage only, and provided in that case that an organization exists and is authorized to act for such purposes.

§ 700.721 Administration and discipline: Staff based ashore.

When a staff is based ashore, the enlisted persons serving with the staff shall, when practicable, be assigned to an appropriated activity for purposes of administration and discipline. The staff officers may be similarly assigned. Members of a staff assigned for any purpose to a command or activity shall conform in matters of general discipline to the internal regulations and routine of that command or activity.

§ 700.722 Administration and discipline: Staff unassigned to an administrative command.

(a) When it is not practicable to assign enlisted persons serving with the staff of a commander to an established activity for administration and discipline, the commander may designate an officer of the staff to act as the commanding

officer of such persons and shall notify the Judge Advocate General and the Commandant of the Marine Corps, or the Chief of Naval Personnel, as appropriate, of such action.

(b) If the designating commander desires the commanding officer of staff enlisted personnel to possess authority to convene courts-martial, the commander should request the Judge Advocate General to obtain such authorization from the Secretary of the Navy.

§ 700.723 Administration and discipline: Separate and detached command

Any flag or general officer in command, any officer authorized to convene general courts-martial, or the senior officer present may designate organizations which are separate or detached commands. Such officer shall state in writing that it is a separate or detached command and shall inform the Judge Advocate General of the action taken. If authority to convene courts-martial is desired for the commanding officer or officer in charge of such separate or detached command, the officer designating the organization as separate or detached shall request the Judge Advocate general to obtain authorization from the Secretary of the Navy.

Subpart H—The Commanding Officer

Commanding Officers in General

§ 700.801 Applicability.

In addition to commanding officers, the provisions of this chapter shall apply, where pertinent, to aircraft commanders, officers in charge (including warrant officers and petty officers when so detailed) and those persons standing the command duty.

§ 700.802 Responsibility.

(a) The responsibility of the commanding officer for his or her command is absolute, except when, and to the extent, relieved therefrom by competent authority, or as provided otherwise in these regulations. The authority of the commanding officer is commensurate with his or her responsibility. While the commanding officer may, at his or her discretion, and when not contrary to law or regulations, delegate authority to subordinates for the execution of details, such delegation of authority shall in no way relieve the commanding officer of his or her continued responsibility for the safety, well-being, and efficiency of the entire command.

(b) A commanding officer who departs from his or her orders or instructions, or takes official action which is not in accordance with such orders or instructions, does so upon his or her own responsibility and shall report immediately the circumstances to the officer from whom the prior orders or instructions were received. Of particular importance is the commanding officer's duty to take all necessary and appropriate action in self-defense of the command.

(c) The commanding officer shall be responsible for economy within his or her command. To this end the commanding officer shall require from his or her subordinates a rigid compliance with the regulations governing the receipt, accounting, and expenditure of public money and materials, and the implementation of improved management techniques and procedures.

(d) The commanding officer and his or her subordinates shall exercise leadership through personal example, moral responsibility, and judicious attention to the welfare of persons under their control or supervision. Such leadership shall be exercised in order to achieve a positive, dominant influence on the performance of persons in the Department of the Navy.

§ 700.804 Organization of commands.

All commands and other activities of the Department of the Navy shall be organized and administered in accordance with law, United States Navy Regulations, and the orders of competent authority. All orders and instructions of the commanding officer shall be in accordance therewith.

§ 700.809 Persons found under incriminating circumstances.

(a) The commanding officer shall keep under restraint or surveillance, as necessary, any person not in the armed services of the United States who is found under incriminating or irregular circumstances within the command, and shall immediately initiate an investigation.

(b) Should an investigation indicate that such person is not a fugitive from justice or has not committed or attempted to commit an offense, he shall be released at the earliest opportunity, except:

(1) If not a citizen of the United States, and the place of release is under the jurisdiction of the United States, the nearest federal immigration authorities shall be notified as to the time and place of release sufficiently in advance to permit them to take such steps as they deem appropriate.

(2) Such persons shall not be released in territory not under the jurisdiction of the United States without first obtaining the consent of the proper foreign authorities, except where the investigation shows that he entered the command from territory of the foreign state, or that he is a citizen or subject of that state.

(c) If the investigation indicates that such person has committed or attempted to commit an offense punishable under the authority of the commanding officer, the latter shall take such action as he deems necessary.

(d) If the investigation indicates that such a person is a fugitive from justice, or has committed or attempted to commit an offense which requires actions beyond the authority of the commanding officer, the latter shall, at the first opportunity, deliver such person, together with a statement of the circumstances, to the proper civil authorities.

(e) In all cases under paragraph (d) of this section, a report shall be made promptly to the Chief of Naval Operations or the Commandant of the Marine Corps, as appropriate.

§ 700.810 Rules for visits.

(a) Commanding officers are responsible for the control of visitors to their commands and shall comply with the relevant provisions of Department of the Navy concerning classified information and physical security.

(b) Commanding officers shall take such measures and impose such restrictions on visitors as are necessary to safeguard the classified material under their jurisdiction. Arrangements for general visiting shall always be made with due regard for physical security and based on the assumption that foreign agents will be among the visitors.

(c) Commanding officers and others officially concerned shall exercise reasonable care to safeguard the persons and property of visitors to naval activities as well as taking those necessary precautions to safeguard the persons and property within the command.

§ 700.811 Dealers, tradesmen, and agents.

(a) In general, dealers or tradesmen or their agents shall not be admitted within a command, except as authorized by the commanding officer:

(1) To conduct public business;

(2) To transact specific private business with individuals at the request of the latter; or

(3) To furnish services and supplies which are necessary and are not otherwise, or are insufficiently, available to the personnel of the command.

(b) Personal commercial solicitation and the conduct of commercial

transactions are governed by policies of the Department of Defense.

§ 700.812 Postal matters.

Commanding officers shall ensure that mail and postal funds are administered in accordance with instructions issued by the Postmaster General and approved for the naval service by the Chief of Naval Operations, and instructions issued by the Chief of Naval Operations, the Chief of Naval Personnel, or the Commandant of the Marine Corps, as appropriate; and that postal clerks or other persons authorized to handle mail perform their duties strictly in accordance with those instructions.

§ 700.815 Deaths.

The commanding officer, in the event of the death of any person within his or her command, shall ensure that the cause of death and the circumstances under which death occurred are established, that the provisions of the Manual of the Judge Advocate General are adhered to in documenting the cause and circumstances, and that the appropriate casualty report is submitted.

§ 700.816 The American National Red Cross.

(a) Pursuant to the request of the Secretary of the Navy, and subject to such instructions as the Secretary may issue, the American National Red Cross is authorized to conduct a program of welfare, including social, financial, medical and dental aid, for naval personnel; to assist in matters pertaining to prisoners of war; and to provide such other services as are appropriate functions for the Red Cross. The American National Red Cross is the only volunteer society authorized by the Government to render medical and dental aid to the armed forces of the United States. Other organizations desiring to render medical and dental aid may do so only through the Red Cross.

(b) Requests for Red Cross services shall be made to the Chief of Naval Personnel or the Commandant of the Marine Corps or, in the case of medical services, to the Commander, Naval Medical Command.

(c) Activities and personnel of the American National Red Cross in areas subject to naval jurisdiction shall conform to such administrative regulations as may be prescribed by appropriate naval authority.

(d) Red Cross personnel shall be considered to have the status of commissioned officers, subject to such restrictions as may be imposed by the Chief of Naval Personnel or the Commandant of the Marine Corps.

§ 700.819 Records.

The commanding officer shall require that records relative to personnel, material and operations, as required by current instructions, are maintained properly by those responsible therefor.

§ 700.822 Delivery of personnel to civil authorities and service of subpoena or other process.

(a) Commanding officers or other persons in authority shall not deliver any person in the naval service to civil authorities except as provided by the Manual of the Judge Advocate General.

(b) Commanding officers are authorized to permit the service of subpoenas or other process as provided by the Manual of the Judge Advocate General.

§ 700.826 Physical security.

(a) The commanding officer shall take appropriate action to safeguard personnel, to prevent unauthorized access to installations, equipment, materials and documents, and to safeguard them against acts of sabotage, damage, theft, or terrorism.

(b) The commanding officer shall take action to protect and maintain the security of the command against dangers from fire, windstorms, or other acts of nature.

§ 700.827 Effectiveness for service.

The commanding officer shall:

(a) Exert every effort to maintain the command in a state of maximum effectiveness for war or other service consistent with the degree of readiness as may be prescribed by proper authority. Effectiveness for service is directly related to the state of personnel and material readiness; and

(b) Make him or herself aware of the progress of any repairs, the status of spares, repair parts and other components, personnel readiness and other factors or conditions that could lessen the effectiveness of his or her command. When the effectiveness is lessened appreciably, that fact shall be reported to appropriate superiors.

§ 700.828 Search by foreign authorities.

(a) The commanding officer shall not permit a ship under his or her command to be searched on any pretense whatsoever by any person representing a foreign state, nor permit any of the personnel within the confines of his or her command to be removed from the command by such person, so long as he has the capacity to repel such act. If force should be exerted to compel submission, the commanding officer is to resist that force to the utmost of his or her power.

(b) Except as may be provided by international agreement, the commanding officer of a shore activity shall not permit his or her command to be searched by any person representing a foreign state, nor permit any of the personnel within the confines of his or her command to be removed from the command by such person, so long as he or she has the power to resist.

§ 700.832 Environmental pollution.

The commanding officer shall cooperate with Federal, state and local governmental authorities in the prevention, control and abatement of environmental pollution. If the requirements of any environmental law cannot be achieved because of operational considerations, insufficient resources or other reason, the commanding officer shall report to the immediate superior in the chain of command. The commanding officer shall be aware of existing policies regarding pollution control, and should recommend remedial measures when appropriate.

§ 700.834 Care of ships, aircraft, vehicles and their equipment.

The commanding officer shall cause such inspections and tests to be made and procedures carried out as are prescribed by competent authority, together with such others as he or she deems necessary, to ensure the proper preservation, repair, maintenance and operation of any ship, aircraft, vehicle, and their equipment assigned to his or her command.

§ 700.835 Work, facilities, supplies, or services for other Government departments, State or local governments, foreign governments, private parties and morale, welfare, and recreational activities.

(a) Work may be done for or on facilities, supplies, or services furnished to departments and agencies of the Federal and State governments, local governments, foreign governments, private parties, and morale, welfare, and recreational activities with the approval of a commanding officer provided:

(1) The cost does not exceed limitations the Secretary of the Navy may approve or specify; and

(2) In the case of private parties, it is in the interest of the government to do so and there is no issue of competition with private industry; and

(3) In the case of foreign governments, a disqualification of a government has not been issued for the benefits of this article.

(b) Work shall not be started nor facilities, supplies, or services furnished morale, welfare, and recreational activities not classified as

instrumentalities of the United States, or state or local governments or private parties, until funds to cover the estimated cost have been deposited with the commanding officer or unless otherwise provided by law.

(c) Work shall not be started, nor facilities, supplies, or services furnished other Federal Government departments and agencies, or expenses charged to non-appropriated funds of morale, welfare and recreational activities classified as instrumentalities of the United States, until reimbursable funding arrangements have been made.

(d) Work, facilities, supplies, or services furnished non-appropriated fund activities classified as instrumentalities of the United States in the Navy Comptroller Manual shall be funded in accordance with regulations of the Comptroller of the Navy.

(e) Supplies or services may be furnished to naval vessels and military aircraft of friendly foreign governments (unless otherwise provided by law or international treaty or agreement):

(1) On a reimbursable basis without an advancement of funds, when in the best interest of the United States:

(i) Routine port services (including pilotage, tugs, garbage removal, linehandling and utilities) in territorial waters or waters under United States control.

(ii) Routine airport services (including air traffic control, parking, servicing and use of runways).

(iii) Miscellaneous supplies (including fuel, provisions, spare parts, and general stores) but not ammunition. Supplies are subject to approval of the cognizant fleet or force commanders when provided overseas.

(iv) With approval of Chief of Naval Operations in each instance, overhauls, repairs, and alterations together with necessary equipment and its installation required in connection therewith, to vessels and military aircraft.

(2) Routine port and airport services may be furnished at no cost to the foreign government concerned where such services are provided by persons of the naval service without direct cost to the Department of the Navy.

(f) In cases of emergency involving possible loss of life or valuable property, work may be started or facilities furnished prior to authorization, or provision for payment, but in all such cases a detailed report of the facts and circumstances shall be made promptly to the Secretary of the Navy or the appropriate authority.

(g) Charges and accounting for any work, supplies, or services shall be as prescribed in the Navy Comptroller Manual.

Commanding Officers Afloat

§ 700.840 Unauthorized persons on board.

The commanding officer shall satisfy him or herself that there is no unauthorized person on board before proceeding to sea or commencing a flight.

§ 700.841 Control of passengers.

(a) Control of passage in and protracted visits to aircraft and ships of the Navy by all persons, within or without the Department of the Navy, shall be exercised by the Chief of Naval Operations.

(b) Nothing in this section shall be interpreted as prohibiting the senior officer present from authorizing the passage in ships and aircraft of the Navy by such persons as he or she judges necessary in the public interest or in the interest of humanity. The senior officer present shall report the circumstances to the Chief of Naval Operations when he or she gives such authorization.

§ 700.842 Authority over passengers.

Except as otherwise provided in these regulations or in orders from competent authority, all passengers in a ship or aircraft of the naval service are subject to the authority of the commanding officer and shall conform to the internal regulations and routine of the ship or aircraft. The commanding officer of such ship or aircraft shall take no disciplinary action against a passenger not in the naval service, other than that authorized by law. The commanding officer may, when he or she deems such an action to be necessary for the safety of the ship or aircraft or of any persons embarked, subject a passenger not in the naval service to such restraint as the circumstances require until such time as delivery to the proper authorities is possible. A report of the matter shall be made to an appropriate superior of the passenger.

§ 700.844 Marriages on board.

The commanding officer shall not perform a marriage ceremony on board his or her ship or aircraft. He or she shall not permit a marriage ceremony to be performed on board when the ship or aircraft is outside the territory of the United States, except:

(a) In accordance with local laws and the laws of the state, territory, or district in which the parties are domiciled, and

(b) In the presence of a diplomatic or consular official of the United States, who has consented to issue the certificates and make the returns required by the consular regulations.

§ 700.845 Maintenance of logs.

(a) A deck log and an engineering log shall be maintained by each ship in commission, and by such other ships and craft as may be designated by the Chief of Naval Operations.

(b) A compass record shall be maintained as an adjunct to the deck log. An engineer's bell book shall be maintained as an adjunct to the engineering log.

(c) The Chief of Naval Operations shall prescribe regulations governing the contents and preparation of the deck and engineering logs and adjunct records.

(d) In the case of a ship or craft equipped with automated data logging equipment, the records generated by such equipment satisfy the requirements of this section.

§ 700.846 Status of logs.

The deck log, the engineering log, the compass record, the bearing hooks, the engineer's bell book, and any records generated by automated data logging equipment shall each constitute an official record of the command.

§ 700.847 Responsibility of a master of an in-service ship of the Military Sealift Command.

(a) In an in-service ship of the Military Sealift Command, the master's responsibility is absolute, except when, and to the extent, relieved therefrom by competent authority. The authority of the master is commensurate with the master's responsibility. The master is responsible for the safety of the ship and all persons on board. He or she is responsible for the safe navigation and technical operation of the ship and has paramount authority over all persons on board. He or she is responsible for the preparation of the abandon ship bill and has exclusive authority to order the ship abandoned. The master may, using discretion, and when not contrary to law or regulation, delegate authority for operation of shipboard functions to competent subordinates. However, such delegation of authority shall in no way relieve the master of continued responsibility for the safety, well-being, and efficiency of the ship.

(b) All orders and instructions of the master shall be in accordance with appropriate laws of the United States, and all applicable orders and regulations of the Navy, Military Sealift Command, and the Office of Personnel Management. A master who departs from the orders or instructions of competent authority or takes official action contrary to such orders or instructions, shall report immediately the circumstances to the authority from

whom the prior orders or instructions were received.

§ 700.848 Relations with merchant seamen.

When in foreign waters, the commanding officer, with the approval of the senior officer present, may receive on board as supernumeraries for rations and passage:

(a) Distressed seamen of the United States for passage to the United States, provided they bind themselves to be amenable in all respects to Navy Regulations.

(b) As prisoners, seamen from merchant vessels of the United States, provided that the witnesses necessary to substantiate the charges against them are received, or adequate means adopted to ensure the presence of such witnesses on arrival of the prisoners at the place where they are to be delivered to the civil authorities.

§ 700.855 Status of boats.

(a) Boats shall be regarded in all matters concerning the rights, privileges and comity of nations as part of the ship or aircraft to which they belong.

(b) In ports where war, insurrection or armed conflict exists or threatens, the commanding officer shall:

(1) Require that boats away from the ship or aircraft have some appropriate and competent person in charge; and

(2) See that steps are taken to make their nationality evident at all times.

§ 700.856 Pilotage.

(a) The commanding officer shall:

(1) Pilot the ship under all ordinary circumstances, but he may employ pilots whenever, in his or her judgment such employment is prudent;

(2) Not call a pilot on board until the ship is ready to proceed;

(3) Not retain a pilot on board after the ship has reached her destination or a point where the pilot is no longer required;

(4) Give preference to licensed pilots; and

(5) Pay pilots no more than the local rates.

(b) A pilot is merely an adviser to the commanding officer. The presence on board of a pilot shall not relieve the commanding officer or any subordinate from his or her responsibility for the proper performance of the duties with which he or she may be charged concerning the navigation and handling of the ship. For an exception to the provisions of this paragraph, see ''Rules and Regulations Covering Navigation of the Panama Canal and Adjacent Waters,'' (35 CFR Chapter I, subchapter C) which directs that the pilot assigned to a vessel in those waters shall have control of the navigation and movement of the vessel. Also see the provisions of these regulations concerning the navigation of ships at a naval shipyard or station, or in entering or leaving drydock.

§ 700.857 Safe navigation and regulations governing operation of ships and aircraft.

(a) The commanding officer is responsible for the safe navigation of his or her ship or aircraft, except as prescribed otherwise in these regulations for ships at a naval shipyard or station, in drydock, or in the Panama Canal. During an armed conflict, an exercise simulating armed conflict, or an authorized law enforcement activity, competent authority may modify the use of lights or other safeguards against collision. Except in time of actual armed conflict, such modifications will be authorized only when ships or aircraft clearly will not be hazarded.

(b) Professional standards and regulations governing shiphandling, safe navigation, safe anchoring and related operational matters shall be promulgated by the Chief of Naval Operations.

(c) Professional standards and regulations governing the operation of naval aircraft and related matters shall be promulgated by the Chief of Naval Operations or the Commandant of the Marine Corps, as appropriate.

(d) The Commanding Officer is responsible for ensuring that weather and oceanic effects are considered in the effective and safe operation of his or her ship or aircraft.

§ 700.859 Quarantine.

(a) The commanding officer or aircraft commander of a ship or aircraft shall comply with all quarantine regulations and restrictions, United States or foreign, for the port or area within which the ship or aircraft is located.

(b) The commanding officer shall give all information required by authorized foreign officials, insofar as permitted by military security, and will meet the quarantine requirements promulgated by proper authority for United States or foreign ports. However, nothing in this section shall be interpreted as authorizing commanding officers to permit on board inspections by foreign officials, or to modify in any manner the provisions of § 700.828 of these regulations.

(c) The commanding officer shall allow no intercourse with a port or area or with other ships or aircraft until after consultation with local health authorities when:

(1) Doubt exists as to the sanitary regulations or health conditions of the port or area;

(2) A quarantine condition exists aboard the ship or aircraft;

(3) Coming from a suspected port or area, or one actually under quarantine.

(d) No concealment shall be made of any circumstance that may subject a ship or aircraft of the Navy to quarantine.

(e) Should there appear at any time on board a ship or aircraft conditions which present a hazard of introduction of a communicable disease outside the ship or aircraft, the commanding officer or aircraft commander shall at once report the fact to the senior officer present, to other appropriate higher authorities and, if in port, to the health authorities having quarantine jurisdiction. The commanding officer or aircraft commander shall prevent all contracts likely to spread disease until pratique is received. The commanding officer of a ship in port shall hoist the appropriate signal.

§ 700.860 Customs and immigration inspections.

(a) The commanding officer or aircraft commander shall facilitate any proper examination which it may be the duty of a customs officer or immigration officer of the United States to make on board the ship or aircraft. The commanding officer or air craft commander shall not permit a foreign customs officer or an immigration officer to make any examination whatsoever, except as hereinafter provided, on board the ship, aircraft or boats under his or her command.

(b) When a ship or aircraft of the Navy or a public vessel manned by naval personnel and operating under the direction of the Department of the Navy is carrying cargo for private commercial account, such cargo shall be subject to the local customs regulations of the port, domestic or foreign, in which the ship or aircraft may be, and in all matters relating to such cargo, the procedure prescribed for private merchant vessels and aircraft shall be followed. Government-owned stores or cargo in such ship or aircraft not landed nor intended to be landed nor in any manner trafficked in, are, by the established precedent of international courtesy, exempt from customs duties, but a declaration of such stores or cargo, when required by local customs regulations, shall be made. Commanding officers shall prevent, as far as possible, disputes with the local authorities in such cases, but shall protect the ship or aircraft and the

Government-owned stores and cargo from any search or seizure.

(c) Upon arrival from a foreign country, at the first port of entry in United States territory, the commanding officer, or the senior officer of ships or aircraft in company, shall notify the collector of the port. Each individual aboard shall, in accordance with customs regulations, submit a list of articles purchased or otherwise acquired by him abroad. Dutiable articles shall not be landed until the customs officer has completed his inspection.

(d) Commanding officers of naval vessels and aircraft transporting United States civilian and foreign military and civilian passengers shall satisfy themselves that the passenger clearance requirements of the Immigration and Naturalization Service are complied with upon arrival at points within the jurisdiction of the United States. Clearance for such passengers by an immigration officer is necessary upon arrival from foreign ports and at the completion of movements between any of the following: Continental United States (including Alaska and Hawaii), the Canal Zone, Puerto Rico, Virgin Islands, Guam, American Samoa, or other outlying places subject to United States jurisdiction. Commanding officers, prior to arriving, shall advise the cognizant naval or civilian port authority of the aforementioned passengers aboard and shall detain them for clearance as required by the Immigration and Naturalization Service.

(e) The provisions of this section shall not be construed to require delaying the movements of any ship or aircraft of the Navy in the performance of her assigned duty.

Special Circumstances/Ships in Naval Stations and Shipyards

§ 700.871 Responsibility for safety of ships and craft at a naval station or shipyard.

(a) The commanding officer of a naval station or shipyard shall be responsible for the care and safety of all ships and craft at such station or shipyard not under a commanding officer or assigned to another authority, and for any damage that may be done by or to them. In addition, the commanding officer of a naval station or shipyard shall be responsible for the safe execution of work performed by that activity upon any ship located at the activity.

(b) It shall be the responsibility of the commanding officer of a ship in commission which is undergoing overhaul, or which is otherwise immobilized at a naval station or shipyard, to request such services as are necessary to ensure the safety of the ship. The commanding officer of the naval station or shipyard shall be responsible for providing requested services in a timely and adequate manner.

(c) When a ship or craft not under her own power is being moved by direction of the commanding officer of a naval station or shipyard, that officer shall be responsible for any damage that may result therefrom. The pilot or other person designated for the purpose shall be in direct charge of such movement, and all persons on board shall cooperate with and assist the pilot as necessary. Responsibility for such actions in a private shipyard will be assigned by contract to the contractor.

(d) When a ship operating under her own power is being drydocked, the commanding officer shall be fully responsible for the safety of his ship until the extremity of the ship first to enter the drydock reaches the dock sill and the ship is pointed fair for entering the drydock. The docking officer shall then take charge and complete the docking, remaining in charge until the ship has been properly landed, bilge blocks hauled, and the dock pumped down. In undocking, the docking officer shall assume charge when flooding the dock preparatory to undocking is started, and shall remain in charge until the extremity of the ship last to leave the dock clears the sill, and the ship is pointed fair for leaving the drydock, when the ship's commanding officer shall assume responsibility for the safety and control of the ship.

(e) When a naval ship is to be drydocked in a private shipyard under a contract being administered by a supervisor of shipbuilding, the responsibilities of the commanding officer are the same as in the case of drydocking in a naval shipyard. The responsibilities for the safety of the actual drydocking, normally assigned to the commanding officer of a naval shipyard through the docking officer, will be assigned by contract to the contractor. The supervisor of shipbuilding is responsible, however, for ensuring that the contractor facilities, methods, operations, and qualifications meet the standards of efficiency and safety prescribed by Navy directives.

(f) If the ship is elsewhere than at a naval station or shipyard, the relationship between the commanding officer and the supervisor of shipbuilding, or other appropriate official, shall be the same as that between the commanding officer and the commanding officer of a naval station or naval shipyard as specified in this article.

§ 700.872 Ships and craft in drydock.

(a) The commanding officer of a ship in drydock shall be responsible for effecting adequate closure, during such periods as they will be unattended, of all openings in the ship's bottom upon which no work is being undertaken by the docking activity. The commanding officer of the docking activity shall be responsible for the closing, at the end of working hours, of all valves and other openings in the ship's bottom upon which work is being undertaken by the docking activity, when such closing is practicable.

(b) Prior to undocking, the commanding officer of a ship shall report to the docking officer any material changes in the amount and location of weights on board which have been made by the ship's force while in dock, and shall ensure, and so report, that all sea valves and other openings in the ship's bottom are properly closed. The level of water in the dock shall not be permitted to rise above the keel blocks prior to receipt of this report. The above valves and openings shall be tended during flooding of the dock.

(c) When a ship or craft, not in commission, is in a naval drydock, the provisions of this article shall apply, except that the commanding officer of the docking activity or his representative shall act in the capacity of the commanding officer of the ship or craft.

(d) When a naval ship or craft is in drydock in a private shipyard, responsibility for actions normally assigned by the commanding officer of the docking activity will be assigned by contract to the contractor.

§ 700.873 Inspection incident to commissioning of ships.

When a ship is to be commissioned, the authority designated to place such ship in commission shall, just prior to commissioning, cause an inspection to be made to determine the cleanliness and readiness of the ship to receive its crew and outfit. In the case of the delivery of a ship by a contractor, the above inspection shall precede acceptance of the ship. A copy of the report of this inspection shall be furnished the officer detailed to command the ship and to appropriate commands.

Special Circumstances/Prospective Commanding Officers

§ 700.880 Duties of the prospective commanding officer of a ship.

(a) Except as may be prescribed by the Chief of Naval Operations, the prospective commanding officer of a ship not yet commissioned shall have

no independent authority over the preparation of the ship for service by virtue of his assignment to such duty, until the ship is commissioned and placed under his or her command. The prospective commanding officer shall:

(1) Procure from the commander of the naval shipyard or the supervisor of shipbuilding the general arrangement plans of the ship, and all pertinent information relative to the general condition of the ship and the work being undertaken on the hull, machinery and equipment, upon reporting for duty;

(2) Inspect the ship as soon after reporting for duty as practicable, and frequently thereafter, in order to keep him or herself informed of the state of her preparation for service. If, during the course of these inspections he or she notes an unsafe or potentially unsafe condition, he or she shall report such fact to the commander of the naval shipyard or the supervisor of shipbuilding and to his or her superior for resolution;

(3) Keep him or herself informed as to the progress of the work being done, including tests of equipment, and make such recommendations to the commander of the naval shipyard or the supervisor of shipbuilding as he or her she deems appropriate;

(4) Ensure that requisitions are submitted for articles to outfit the ship which are not otherwise being provided;

(5) Prepare the organization of the ship;

(6) Train the nucleus crew to effectively and efficiently take charge of and operate the ship upon commissioning; and

(7) Make such reports as may be required by higher authority, and include therein a statement of any deficiency in material or personnel.

(b) If the prospective commanding officer does not consider the ship in proper condition to be commissioned at the time the commander of the naval shipyard or the supervisor of shipbuilding signifies his intention of transferring the ship to the prospective commanding officer, he or she shall report that conclusion with his reasons therefor, in writing, to the commander of the naval shipyard or the supervisor of shipbuilding and to the appropriate higher authority.

(c) If the ship is elsewhere than at a naval shipyard, the relationship between the prospective commanding officer and the supervisor of shipbuilding, or other appropriate official, shall be the same as that between the prospective commanding officer and the commander of a naval shipyard as specified in this article.

(d) The Chief of Naval Operations shall be responsible for providing the commanding officer or prospective commanding officer of a naval nuclear powered ship with the authority and direction necessary to carry out his or her responsibilities.

Subpart I—The Senior Officer Present

Contents

§ 700.901 The senior officer present.

Unless some other officer has been so designated by competent authority, the ''senior officer present'' is the senior line officer of the Navy on active duty, eligible for command at sea, who is present and in command of any part of the Department of the Navy in the locality or within an area prescribed by competent authority, except where personnel of both the Navy and the Marine Corps are present on shore and the officer of the Marine Corps who is in command is senior to the senior line officer of the Navy. In such cases, the officer of the Marine Corps shall be the senior officer present on shore.

§ 700.902 Eligibility for command at sea.

All officers of the line of the Navy, including Naval Reserve, on active duty, except those designated for the performance of engineering, aeronautical engineering or special duties, and except those limited duty officers who are not authorized to perform all deck duties afloat, are eligible for command at sea.

§ 700.903 Authority and responsibility.

At all times and places not excluded in these regulations, or in orders from competent authority, the senior officer present shall assume command and direct the movements and efforts of all persons in the Department of the Navy present, when, in his or her judgment, the exercise of authority for the purpose of cooperation or otherwise is necessary. The senior officer present shall exercise this authority in a manner consistent with the operational command responsibility vested in the commanders of unified or specified commands.

§ 700.904 Authority of senior officer of the Marine Corps present.

The authority and responsibility of the senior officer present are also conferred upon the senior commanding officer of the Marine Corps present with respect to those units of the Marine Corps, including Navy personnel attached, which are in the locality and not under the authority of the senior officer present.

§ 700.922 Shore patrol.

(a) When liberty is granted to any considerable number of persons, except in an area that can absorb them without danger of disturbance or disorder, the senior officer present shall cause to be established, temporarily or permanently, in charge of an officer, a sufficient patrol of officers, petty officers, and noncommissioned officers to maintain order and suppress any unseemly conduct on the part of any person on liberty. The senior patrol officer shall communicate with the chief of police or other local officials and make such arrangements as may be practicable to aid the patrol in carrying out its duties properly. Such duties may include providing assistance to military personnel in relations with civil courts and police, arranging for release of service personnel from civil authorities to the parent command, and providing other services that favorably influence discipline and morale.

(b) A patrol shall not be landed in any foreign port without first obtaining the consent of the proper local officials. Tact must be used in requesting permission; and, unless it is given willingly and cordially, the patrol shall not be landed. If consent cannot be obtained, the size of liberty parties shall be held to such limits as may be necessary to render disturbances unlikely.

(c) Officers and enlisted personnel on patrol duty in a foreign country normally should not be armed. In the United States, officers and men may be armed as prescribed by the senior officer present.

(d) No officer or enlisted person who is a member of the shore patrol or beach guard, or is assigned in support thereof, shall partake of or indulge in any form of intoxicating beverage or other form of intoxicant while on duty, on post, or at other times prescribed by the senior patrol officer. The senior patrol officer shall ensure that the provisions of this paragraph are strictly observed and shall report promptly in writing to the senior officer present all violations of these provisions that may come to his or her notice. All officers and enlisted personnel of the patrol shall report to the senior patrol officer all violations of the provisions of this paragraph on the part of those under them.

§ 700.923 Precautions for health.

The senior officer present shall take precautions to preserve the health of the persons under his or her authority. He or she shall obtain information regarding the healthfulness of the area and medical facilities available therein

and shall adopt such measures as are required by the situation.

§ 700.924 Medical or dental aid to persons not in the naval service.

The senior officer present may require the officers of the Medical Corps and Dental Corps under his or her authority to render emergency professional aid to persons not in the naval service when such aid is necessary and demanded by the laws of humanity or the principles of international courtesy.

§ 700.934 Exercise of power of consul.

When upon the high seas or in any foreign port where there is no resident consul of the United States, the senior officer present afloat has the authority to exercise all powers of a consul in relation to mariners of the United States.

§ 700.939 Granting of asylum and temporary refuge.

(a) If an official of the Department of the Navy is requested to provide asylum or temporary refuge, the following procedures shall apply:

(1) On the high seas or in territories under exclusive United States jurisdiction (including territorial seas, the Commonwealth of Puerto Rico, territories under United States administration, and possessions):

(i) At his or her request, an applicant for asylum will be received on board any naval aircraft or waterborne craft, Navy or Marine Corps activity or station.

(ii) Under no circumstances shall the person seeking asylum be surrendered to foreign jurisdiction or control, unless at the personal direction of the Secretary of the Navy or higher authority. Persons seeking political asylum should be afforded every reasonable care and protection permitted by the circumstances.

(2) In territories under foreign jurisdiction (including foreign territorial seas, territories, and possessions):

(i) Temporary refuge shall be granted for humanitarian reasons on board a naval aircraft or waterborne craft, Navy or Marine Corps activity or station, only in extreme or exceptional circumstances wherein life or safety of a person is put in imminent danger, such as pursuit by a mob. When temporary refuge is granted, such protection shall be terminated only when directed by the Secretary of the Navy or higher authority.

(ii) A request by foreign authorities for return of custody of a person under the protection of temporary refuge will be reported to the CNO or Commandant of the Marine Corps. The requesting foreign authorities will be informed that the case has been referred to higher authorities for instructions.

(iii) Persons whose temporary refuge is terminated will be released to the protection of the authorities designated in the message authorizing release.

(iv) While temporary refuge can be granted in the circumstances set forth above, permanent asylum will not be granted.

(v) Foreign nationals who request assistance in forwarding requests for political asylum in the United States will not be received on board, but will be advised to apply in person at the nearest American Embassy or Consulate. If a foreign national is already on board, however, such person will not be surrendered to foreign jurisdiction or control unless at the personal direction of the Secretary of the Navy.

(3) The Chief of Naval Operations or Commandant of the Marine Corps, as appropriate, will be informed by the most expeditious means of all action taken pursuant to paragraphs (a)(1)(i) and (a)(1)(ii) of this section, as well as the attendant circumstances. Telephone or voice communications will be used where possible, but must be confirmed as soon as possible with an immediate precedence message, information to the Secretary of State (for actions taken pursuant to paragraphs (a)(2)(i) and (a)(2)(v) of this section, also make the appropriate American Embassy or Consular Office an information addressee). If communication by telephone or voice is not possible, notification will be effected by an immediate precedence message, as described above. The Chief of Naval Operations or Commandant of the Marine Corps will cause the Secretary of the Navy and the Deputy Director for Operations of the National Military Command Center to be notified without delay.

(b) Personnel of the Department of the Navy shall neither directly nor indirectly invite persons to seek asylum or temporary refuge.

Subpart J—Precedence, Authority and Command

Authority

§ 700.1020 Exercise of authority.

(a) All persons in the naval service on active service, and those on the retired list with pay, and transferred members of the Fleet Reserve and the Fleet Marine Corps Reserve, are at all times subject to naval authority. While on active service they may, if not on leave of absence except as noted below, on the sick list, taken into custody, under arrest, suspended from duty, in confinement or otherwise incapable of discharging their duties, exercise authority over all persons who are subordinated to them.

(b) A person in the naval service, although on leave, may exercise authority:

(1) When in a naval ship or aircraft and placed on duty by the commanding officer or aircraft commander.

(2) When in a ship or aircraft of the armed services of the United States, other than a naval ship or aircraft, as the commanding officer of naval personnel embarked, or when placed on duty by such officer.

(3) When senior officer at the scene of a riot or other emergency, or when placed on duty by such officer.

§ 700.1026 Authority of an officer who succeeds to command.

(a) An officer who succeeds to command due to incapacity, death, departure on leave, detachment without relief or absence due to orders from competent authority of the officer detailed to command, has the same authority and responsibility as the officer whom he or she succeeds.

(b) An officer who succeeds to command during the temporary absence of the commanding officer shall make no changes in the existing organization, and shall endeavor to have the routine and other affairs of the command carried on in the usual manner.

(c) When an officer temporarily succeeding to command signs official correspondence, the word ''Acting'' shall appear below his or her signature.

§ 700.1038 Authority of a sentry.

A sentry, within the limits stated in his or her orders, has authority over all persons on his or her post.

Detail to Duty

§ 700.1052 Orders to active service.

(a) No person who is on leave of absence or not on active service shall be ordered into active service or on duty without permission of the Commandant of the Marine Corps, or the Chief of Naval Personnel, as appropriate, except:

(1) In the case of a person on leave of absence, by the officer who granted the leave or a superior, or

(2) By the senior officer present on a foreign station.

(b) In the event that the senior officer present of a foreign station issues any orders as contemplated by this article, he or she shall report the facts, including the reasons for issuing such orders, to the Commandant of the Marine Corps or the Chief of Naval Personnel, without delay.

(c) Retired officers of the Navy and Marine Corps may be ordered to active

service, with their consent, in time of peace. In time of war or a national emergency, such retired officers may, at the discretion of the Secretary of the Navy, be ordered to active service.

§ 700.1053 Commander of a task force.

(a) A commander in chief, and any other naval commander, may detail in command of a task force, or other task command, any eligible officer within his or her command whom he or she desires. All other officers ordered to the task force or the task command shall be considered subordinate to the designated commander.

(b) All orders issued under the authority of this article shall continue in effect after the death or disability of the officer issuing them until they are revoked by his or her successor in command or higher authority.

(c) The powers delegated to a commander by this article are not conferred on any other officer by virtue of the fact that he or she is the senior officer present.

§ 700.1054 Command of a naval base.

The officer detailed to command a naval base shall be an officer of the line in the Navy, eligible for command at sea.

§ 700.1055 Command of a naval shipyard.

The officer detailed to command a naval shipyard shall be trained in the technical aspects of building and repair of ships and shall have had substantial previous experience in the technical and management phases of such work. Such officer may have been designated for engineering duty.

§ 700.1056 Command of a ship.

(a) The officer detailed to command a commissioned ship shall be an officer of the line in the Navy eligible for command at sea.

(b) The officer detailed to command an aircraft carrier, an aircraft tender, or a ship with a primary task of operating or supporting aircraft shall be an officer of the line in the navy, eligible for command at sea, designated as a naval aviator or naval flight officer.

§ 700.1057 Command of an air activity.

(a) The officer detailed to command a naval aviation school, a naval air station, or a naval air unit organized for flight tactical purposes shall be an officer of the line in the navy, designated as a naval aviator or naval flight officer, eligible for command at sea.

(b) For the purposes of Title 10 U.S.C. § 5942, a naval air training squadron is not considered to be a naval aviation school or a naval air unit organized for flight tactical purposes. The officer detailed to command a naval air training squadron or an air unit organized for administrative purposes shall be a line officer of the naval service, designated as a naval aviator or naval flight officer, eligible for command. If a naval air training squadron has been designated a multi-service training squadron, the officer detailed to command that squadron may be a line officer from any armed service designated as the equivalent of a naval aviator naval flight officer and otherwise eligible to command an aviation squadron or unit under that officer's pertinent service regulations.

(c) The officer detailed to command a naval air activity of a technical nature on shore may be an officer of the line in the navy not eligible for command at sea, but designated as a naval aviator or a naval flight officer or designated for aeronautical engineering duty.

(d) The officer detailed to command a Marine Corps air unit organized for flight tactical purpose shall be an officer of the Marine Corps, designated as a naval aviator or naval flight officer.

(e) Other than an air training squadron, an officer of the Navy shall not normally be detailed to command an aviation unit of the Marine Corps nor shall an officer of the Marine Corps normally be detailed to command an aviation unit of the Navy. Aircraft units of the Marine Corps may, however, be assigned to ships or to naval air activities in the same manner as aircraft units of the navy and, conversely, aircraft units of the navy may be so assigned to Marine Corps air activities. A group composed of aircraft units of the Navy and aircraft units of the Marine Corps may be commanded either by an officer of the Navy or an officer of the Marine Corps.

§ 700.1058 Command of a submarine.

The officer detailed to command a submarine shall be an officer of the line in the Navy, eligible for command at sea and qualified for command of submarines.

§ 700.1059 Command of a staff corps activity.

Officers in a staff corps shall be detailed to command only such activities as are appropriate to their corps.

Subpart K—General Regulations

Standards of Conduct

§ 700.1101 Demand for court-martial.

Except as otherwise provided in the Uniform Code of Military Justice, no person in the naval service may demand a court martial either on him or herself or on any other person in the naval service.

§ 700.1113 Endorsement of commercial product or process.

Except as necessary during contract administration to determine specification or other compliance, no person in the Department of the Navy, in his or her official capacity, shall endorse or express an opinion of approval or disapproval of any commercial product or process.

§ 700.1120 Personal privacy and rights of individuals regarding their personal records.

(a) Except as specifically provided in this section, maintenance of personal records of individuals, and the release of those records, shall be in accordance with the provisions of the Privacy Act and directives issued by the Secretary of the Navy.

(b) Except as specifically provided in this section, the release of departmental records to private parties shall be in accordance with the provisions of the Freedom of Information Act and directives issued by the Secretary of the Navy.

Official Records

§ 700.1121 Disclosure, publication and security of official information.

(a) No person in the Department of the Navy shall convey or disclose by oral or written communications, publication, graphic (including photographic) or other means, any classified information except as provided in directives governing the release of such information. Additionally, no person in the Department of the Navy shall communicate or otherwise deal with foreign entities, even on an unclassified basis, when this would commit the Department of the Navy to disclose classified military information except as may be required in that person's official duties and only after coordination with and approval by a release authority designated by competent authority.

(b) No person in the Department of the Navy shall convey or disclose by oral or written communication, publication or other means except as may be required by his or her official duties, any information concerning the Department of Defense or forces, or any person, thing, plan or measure pertaining thereto, where such information might be of possible assistance to a foreign power; nor shall any person in the Department of the Navy make any public speech or permit publication of an article written by or for that person which is prejudicial to

the interests of the United States. The regulations concerned with the release of information to the public through any media will be as prescribed by the Secretary of the Navy.

(c) No person in the Department of the Navy shall disclose any information whatever, whether classified or unclassified, or whether obtained from official records or within the knowledge of the relator, which might aid or be of assistance in the prosecution or support of any claim against the United States. The prohibitions prescribed by the first sentence of this paragraph are not applicable to an officer or employee of the United States who is acting in the proper course of, and within the scope of, his or her official duties, provided that the disclosure of such information is otherwise authorized by stature, Executive Order of the President or departmental regulation.

(d) Any person in the Department of the Navy receiving a request from the public for Department of the Navy records shall be governed by the provisions of the Freedom of Information Act and implementing directives issued by the Secretary of the Navy.

(e) Persons in the Department of the Navy desiring to submit manuscripts to commercial publishers on professional, political or international subjects shall comply with regulations promulgated by the Secretary of the Navy.

(f) No persons in the naval service on active duty or civilian employee of the Department of the Navy shall act as correspondent of a news service or periodical, or as a television or radio news commentator or analyst, unless assigned to such duty in connection with the public affairs activities of the Department of the Navy, or authorized by the Secretary of the Navy. Except as authorized by the Secretary of the Navy, no person assigned to duty in connection with public affairs activities of the Department of the Navy shall receive any compensation for acting as such correspondent, commentator or analyst.

§ 700.1126 Correction of naval records.

(a) Any military record in the Department of the Navy may be corrected by the Secretary of the Navy, acting through the Board for Correction of Naval Records, when the Secretary considers that such action should be taken in order to correct an error or to remove an injustice.

(b) Applications for corrections under this article may be made only after exhaustion of all other administrative remedies afforded by law or regulation.

(c) Applications for such corrections should be submitted to the Secretary of the Navy (Board for Correction of Naval Records) in accordance with procedural regulations established by the Secretary of the Navy and approved by the Secretary of Defense.

§ 700.1127 Control of official records.

(a) No person, without proper authority, shall withdraw official records or correspondence from the files, or destroy them, or withhold them from those persons authorized to have access to them.

(b) Except as specifically provided in this section, maintenance of personal records of individuals, and the release of those records, shall be in accordance with the provisions of the Privacy Act and directives issued by the Secretary of the Navy.

(c) Except as specifically provided in this section, the release of departmental records to private parties shall be in accordance with the provisions of the Freedom of Information Act and directives issued by the Secretary of the Navy.

§ 700.1128 Official records in civil courts.

(a) Department of the Navy personnel shall not provide official information, testimony, or documents, submit to interview, or permit a view or visit, for litigation purposes, without special written authorization.

(b) Department of the Navy personnel shall not provide, with or without compensation, opinion or expert testimony concerning official Department of Defense information, subjects, personnel or activities, except on behalf of the United States or a party represented by the Department of Justice, or with special written authorization.

Duties of Individuals

§ 700.1138 Responsibilities concerning marijuana, narcotics, and other controlled substances.

(a) All personnel shall endeavor to prevent and eliminate the unauthorized use of marijuana, narcotics and other controlled substances within the naval service.

(b) The wrongful possession, use, introduction, manufacture, distribution and possession, or introduction with intent to distribute, of a controlled substance by persons in the naval service are offenses under Article 112a, Uniform Code of Military Justice. Except for authorized medicinal or other authorized purposes, the possession, use, introduction, sale, or other transfer of marijuana, narcotics or other controlled substances on board any ship or aircraft of the Department of the Navy or within any naval base, station or other place under the jurisdiction of the Department of the Navy by all persons is prohibited.

(c) The term ''controlled substance'' means: a drug or other substance included in Schedule I, II, III, IV, or V established by section 202 of the Comprehensive Drug Abuse Prevention and Control Act of 1970 (84 Stat. 1236), as updated and republished under the provisions of that Act (21 U.S.C. 812).

§ 700.1139 Rules for preventing collisions, afloat and in the air.

(a) All persons in the naval service responsible for the operation of naval ships, craft and aircraft shall diligently observe the International Rules for Preventing Collisions at Sea (commonly called the COLREGS) (33 CFR chapter I), Inland Navigation Rules (33 CFR chapter I), domestic and international air traffic regulations (14 CFR chapter I), and such other rules and regulations as may be established by the Secretary of Transportation or other competent authority for regulating traffic and preventing collisions on the high seas, in inland waters or in the air, where such laws, rules and regulations are applicable to naval ships and aircraft. In those situations where such law, rule or regulation is not applicable to naval ships, craft or aircraft, they shall be operated with due regard for the safety of others.

(b) Any significant infraction of the laws, rules and regulations governing traffic or designed to prevent collisions on the high seas, in inland waters, or in the air which may be observed by persons in the naval service shall be promptly reported to their superiors, including the Chief of Naval Operations or Commandant of the Marine Corps when appropriate.

(c) Reports need not be made under this article if the facts are otherwise reported in accordance with other directives, including duly authorized safety programs.

Rights and Restrictions

§ 700.1162 Alcoholic beverages.

(a) Except as may be authorized by the Secretary of the Navy, the introduction, possession or use of alcoholic beverages on board any ship, craft, aircraft, or in any vehicle of the Department of the Navy is prohibited. The transportation of alcoholic beverages for personal use ashore is authorized, subject to the discretion of the officer in command or officer in charge, or higher authority, when the beverages are delivered to the custody of the officer in command or officer in charge of the ship, craft, or

aircraft in sealed packages, securely packed, properly marked and in compliance with customs laws and regulations, and stored in securely locked compartments, and the transportation can be performed without undue interference with the work or duties of the ship, craft, or aircraft. Whenever an alcoholic beverage is brought on board any ship, craft, or aircraft for transportation for personal use ashore, the person who brings it on board shall at that time file with the officer in command or officer in charge of the ship, craft or aircraft, a statement of the quantity and kind of alcoholic beverage brought on board, together with a certification that its importation will be in compliance with customs and internal revenue laws and regulations and applicable State or local laws at the place of debarkation.

(b) The introduction, possession and use of alcoholic beverages for personal consumption or sale is authorized within naval activities and other places ashore under naval jurisdiction to the extent and in such manner as the Secretary of the Navy may prescribe.

§ 700.1165 Fraternization prohibited.

(a) Personal relationships between officer and enlisted members which are unduly familiar and which do not respect differences in rank are inappropriate and violate long-standing traditions of the naval service.

(b) When prejudicial to good order and discipline or of a nature to bring discredit on the naval service, personal relationships are prohibited:

(1) Between an officer and an enlisted member which are unduly familiar and do not respect differences in rank and grade;

(2) Between officer members which are unduly familiar and do not respect differences in rank and grade where a direct senior-subordinate supervisory relationship exists; and

(3) Between enlisted members which are unduly familiar and do not respect differences in rank and grade where a direct senior-subordinate supervisory relationship exists.

(c) Violation of this article may result in administrative or punitive action. This article applies in its entirety to all regular and reserve personnel.

§ 700.1166 Sexual harassment.

(a) Sexual harassment will not be condoned or tolerated in the Department of the Navy. It is a form of arbitrary discrimination which is unprofessional, unmilitary, and which adversely affects morale and discipline and ultimately the mission effectiveness of the command involved.

(b) Personnel who use implicit or explicit sexual behavior to control, influence or affect the career, promotion opportunities, duty assignments or pay of any other person are engaging in sexual harassment. Naval personnel who make deliberate or repeated offensive verbal comments, gestures or physical contact of a sexual nature in the work environment are also engaging in sexual harassment.

§ 700.1167 Supremacist activity.

No person in the naval service shall participate in any organization that espouses supremacist causes; attempts to create illegal discrimination based on race, creed, color, sex, religion, or national origin; advocates the use of force or violence against the Government of the United States or the Government of any state, territory, district, or possession thereof, or the Government of any subdivision therein; or otherwise engages in efforts to deprive individuals of their civil rights. The term ''participate'', as used in this article, includes acts or conduct, performed alone or in concert with another, such as demonstrating, rallying, fundraising, recruiting, training, or organizing or leading such organizations. The term ''participate'' also includes engaging in any other activities in relation to such organizations or in furtherance of the objectives of such organizations when such activities are detrimental to good order, discipline, or mission accomplishment.

Dated: September 16, 1999.

Nieva Van Leer,

Lieutenant, Judge Advocate General's Corps, U.S. Naval Reserve, Alternate Federal Register Liaison Officer.

[FR Doc. 99–25254 Filed 10–14–99; 8:45 am]

BILLING CODE 3810–FF–U

federal register

Friday
October 15, 1999

Part IV

Department of Justice

Office of Juvenile Justice and Delinquency Prevention

Proposed Comprehensive Plan for Fiscal Year 2000; Notice

DEPARTMENT OF JUSTICE

Office of Juvenile Justice and Delinquency Prevention

[OJP(OJJDP)–1252]

RIN No. 1121–ZB86

Proposed Comprehensive Plan for Fiscal Year 2000

AGENCY: Office of Justice Programs, Office of Juvenile Justice and Delinquency Prevention, Justice.

ACTION: Notice of proposed program plan for fiscal year 2000.

SUMMARY: The Office of Juvenile Justice and Delinquency Prevention is publishing this notice of its Proposed Comprehensive Plan for fiscal year (FY) 2000.

DATES: Comments must be received on or before November 29, 1999.

ADDRESSES: Comments may be mailed to Shay Bilchik, Administrator, Office of Juvenile Justice and Delinquency Prevention, 810 Seventh Street, NW., Washington, DC 20531.

FOR FURTHER INFORMATION CONTACT: Eileen M. Garry, Director, Information Dissemination Unit, at 202–307–5911. [This is not a toll-free number.]

SUPPLEMENTARY INFORMATION: The Office of Juvenile Justice and Delinquency Prevention (OJJDP) is a component of the Office of Justice Programs in the U.S. Department of Justice. Pursuant to the provisions of Section 204(b)(5)(A) of the Juvenile Justice and Delinquency Prevention Act of 1974, as amended, 42 U.S.C. § 5601 *et seq.* (JJDP Act), the Administrator of OJJDP is publishing for public comment a Proposed Comprehensive Plan describing the program activities that OJJDP proposes to carry out during fiscal year (FY) 2000 under Parts C and D of Title II of the JJDP Act, codified at 42 U.S.C. § 5651–5665a, 5667, 5667a. Taking into consideration comments received on this Proposed Comprehensive Plan, the Administrator will develop and publish OJJDP's Final Comprehensive Plan describing the particular program activities that OJJDP intends to fund during FY 2000, using in whole or in part funds appropriated under Parts C and D of Title II of the JJDP Act.

OJJDP acknowledges that at this time its reauthorization legislation is in conference and the Department of Justice's FY 2000 appropriation is not yet final. Depending on the outcome of these legislative actions, the structure of OJJDP's programs may be altered. If that occurs, OJJDP will make any necessary modifications to this Proposed Program Plan when it is published in final form following the public comment period. The programs described here represent OJJDP's current thinking and initial priorities for this fiscal year. These priorities also reflect feedback from OJJDP's ongoing outreach to the field asking for their ideas on priority areas and the most promising types of programs for those areas.

Notice of the official solicitation of grant or cooperative agreement applications for competitive programs to be funded under the Final Comprehensive Plan will be published at a later date in the **Federal Register**. No proposals, concept papers, or other forms of application should be submitted at this time.

Background

In developing its program plan for Parts C and D each year, OJJDP must take into consideration the latest available data on juvenile crime and victimization in the United States and view these statistics in relation to those of recent years. To know where the Nation's juveniles are headed, it is necessary to know where they are and where they have been. OJJDP's *Juvenile Offenders and Victims: 1999 National Report* (National Report) [1] uses the latest data available from the Federal Bureau of Investigation and other sources to provide a comprehensive picture of the nature of juvenile crime and violence across the Nation.

At the end of the 1990's, juvenile crime and violence are continuing a downward trend that began in 1994, bringing a halt to the dramatic annual increases that had alarmed the Nation since 1988. The National Report indicates that in 1997, homicides of juveniles, which had peaked in 1993, fell to their lowest level in the decade (p. 16). Despite well-publicized instances of shocking school violence, students are safer at school than elsewhere, and school crime declined from 1993 through 1996 (p. 31). In 1997, homicides involving a juvenile perpetrator were the lowest in the decade but still 21 percent above the average of the 1980's (p. 53). Serious violence by juveniles dropped 33 percent between 1993 and 1997, compared with a reduction of 25 percent in violence by adults in the same period (p. 62). On the other hand, gang problems now affect more jurisdictions than ever before—including rural and suburban areas (p. 77). Illicit drug use by juveniles, which had declined during the 1980's, has increased since 1992 (p. 74), although the National Household Survey on Drug Abuse reported that the percentage of 12- to 17-year-olds who reported using illegal drugs in the preceding month dropped from 11.4 percent in 1997 to 9.9 percent in 1998. Looking at arrest data, while drug arrests continued to increase for both juveniles and adults between 1993 and 1997, arrests for most serious violent offenses and property offenses declined—with violent crime arrests down 6 percent for juveniles and property crime arrests down 3 percent (p. 117). In 1997, the juvenile violent crime arrest rate, which had increased 62 percent from 1988 to 1994, was at its lowest level in this decade: just 7 percent above the 1989 rate, but still 25 percent above the 1988 rate (p. 120).

Even in the area of violent behaviors that do not reach the attention of the justice system, positive trends are seen. A recent Centers for Disease Control and Prevention (CDC) biennial survey of 16,000 9th through 12th graders found sharp decreases in certain categories of violent activity by teenagers between 1991 and 1997. For example, 18.3 percent of the students surveyed in 1997 reported having carried a gun, knife, or club in the previous month, compared with 26.1 percent of those surveyed in 1991, and the percentage carrying such weapons on school property decreased from 11.8 percent in 1993 to 8.5 percent in 1997. The frequency of fighting also declined, with 37 percent of the 1997 surveyed youth reporting involvement in a physical fight in the previous year, compared with nearly 43 percent of those surveyed in 1991.

This mixture of some reassuring and some still troubling statistics serves as a reminder that while great progress has been made in reducing juvenile delinquency, violence, and victimization, much more needs to be done. Although it is impossible to definitively identify the reasons for the downward trend in juvenile violence, factors cited by the authors of the CDC study include community policing and an expansion of violence prevention programs. As research and evaluation, much of it supported by OJJDP funding, continue to provide information about what works in the areas of prevention and intervention, policymakers, practitioners, and citizens can make informed decisions as to what programs and approaches will best serve to reinforce and continue existing trends away from juvenile delinquency, violence, and victimization.

In this Proposed Comprehensive Plan, OJJDP describes its priorities for funding

[1] Copies of the National Report can be obtained by calling OJJDP's Juvenile Justice Clearinghouse at 800–638–8736 or by visiting OJJDP's Web site at www.ojjdp.ncjrs.org and clicking on ''Publications.''

activities authorized under Part C (National Programs) and Part D (Gang-Free Schools and Communities; Community-Based Gang Intervention) of Title II of the Juvenile Justice and Delinquency Prevention (JJDP) Act. The activities authorized under Parts C and D constitute part, but not all, of OJJDP's overall responsibilities, which are outlined briefly below.

In 1974, the JJDP Act established OJJDP as the Federal agency responsible for providing national leadership, coordination, and resources to develop and implement effective methods to prevent and reduce juvenile delinquency and improve the quality of juvenile justice in the United States. OJJDP administers State Formula Grants under Part B of Title II, State Challenge Grants under Part E of Title II, and Community Prevention Grants under Title V of the JJDP Act to assist States and territories to fund a range of delinquency prevention, control, and juvenile justice system improvement activities. OJJDP provides support activities for these and other programs under statutory set-asides that are used to provide related research, evaluation, statistics, demonstration, and training and technical assistance services.

Under Part C of Title II of the JJDP Act, OJJDP funds Special Emphasis programs and—through its National Institute for Juvenile Justice and Delinquency Prevention—numerous research, evaluation, statistics, demonstration, training and technical assistance, and information dissemination activities. OJJDP funds school and community-based gang prevention, intervention, and suppression programs under Part D and mentoring programs under Part G of Title II of the JJDP Act. OJJDP also coordinates Federal activities related to juvenile justice and delinquency prevention through the Concentration of Federal Efforts Program and serves as the staff agency for the Coordinating Council on Juvenile Justice and Delinquency Prevention; both of these activities are authorized in Part A of Title II of the JJDP Act. Another OJJDP responsibility under the JJDP Act is to administer the Title IV Missing and Exploited Children's Program.

Other programs administered by OJJDP include the Drug Prevention Program, the Enforcing Underage Drinking Laws Program, the Safe Schools Initiative, the Tribal Youth Program, the Safe Start: Children Exposed to Violence Initiative, and the Juvenile Accountability Incentive Block Grants Program. OJJDP also administers programs under the Victims of Child Abuse Act of 1990, as amended, 42 U.S.C. § 13001 *et seq.*

OJJDP focuses its assistance funding and support activities on the development and implementation of programs with the greatest potential for reducing juvenile delinquency and improving the juvenile justice system by establishing partnerships with State and local governments, American Indian and Alaska Native jurisdictions, and public and private agencies and organizations. OJJDP performs its role of national leadership in juvenile justice and delinquency prevention through a cycle of activities. These include collecting data and statistics to determine the extent and nature of issues affecting juveniles, funding research and studies that can lead to demonstrations funded by discretionary grants, evaluating demonstration projects, sharing lessons learned from the field with practitioners through a range of information dissemination vehicles, providing seed money to States and local governments through formula and block grants to implement programs, projects, or reform efforts, and providing training and technical assistance to assist States and local governments to implement programs effectively and to maintain the integrity of model programs as they are being replicated.

As noted previously, OJJDP is a component of the Office of Justice Programs (OJP). This Department of Justice agency emphasizes the importance of coordination among its components and with other Federal agencies whenever possible in order to obtain maximum results from OJP programs and initiatives. OJJDP's coordination efforts include joint funding, interagency agreements, and partnerships to develop, implement, and evaluate projects. This proposed plan reflects OJJDP's coordination efforts. For a more complete picture of OJP program activities that affect the field of juvenile justice, readers are encouraged to review the Office of Justice Programs Fiscal Year 2000 Program Plan when it becomes available. (Readers should check the OJP Web site at www.ojp.usdoj.gov periodically for an announcement of the availability of the OJP Program Plan.)

Fiscal Year 2000 Program Planning Activities

The OJJDP program planning process for FY 2000 is being coordinated with the Assistant Attorney General, Office of Justice Programs (OJP), and all OJP components. The program planning process involves the following steps:

- Internal review of existing programs by OJJDP staff.
- Internal review of proposed programs by OJP bureaus and Department of Justice components.
- Review of information and data from OJJDP grantees and contractors.
- Review of information contained in State comprehensive plans.
- Review of comments from youth service providers, juvenile justice practitioners, and researchers who provide input in proposed new program areas.
- Consideration of suggestions made by juvenile justice policymakers concerning State and local needs.
- Consideration of all comments received during the period of public comment on this Proposed Comprehensive Plan.

Discretionary Grant Continuation Policy

OJJDP has listed on the following pages continuation projects currently funded in whole or in part with Part C and Part D funds and eligible for continuation funding in FY 2000, either within an existing project period or through an extension for an additional project or budget period. A grantee's eligibility for continued funding for an additional budget period within an existing project period depends on the grantee's compliance with funding eligibility requirements and achievement of the prior year's objectives. The amount of award is based on prior projections, demonstrated need, and fund availability.

The only projects described in this Proposed Program Plan are those that would receive Part C or Part D FY 2000 continuation funding under project period or discretionary continuation assistance awards and program areas that OJJDP is considering for new awards under Part C or Part D in FY 2000. This plan does not include descriptions of other OJJDP programs, including mentoring programs under Part G of Title II of the JJDP Act, the Drug Prevention Program, the Enforcing Underage Drinking Laws Program, the Safe Schools Initiative, the Tribal Youth Program, the Safe Start: Children Exposed to Violence Initiative, and the Juvenile Accountability Incentive Block Grants Program. When appropriate, OJJDP issues separate solicitations for applications for funding for these or other programs that are not authorized under Parts C and D. Readers interested in learning about all OJJDP funding opportunities are encouraged to call OJJDP's Juvenile Justice Clearinghouse at 800–638–8736 or visit OJJDP's Web

site at www.ojjdp.ncjrs.org and click on ''Grants & Funding.''

Consideration for continuation funding for an additional project period for previously funded discretionary grant programs will be based on several factors, including the following:

- The extent to which the project responds to the applicable requirements of the JJDP Act.
- Responsiveness to OJJDP and Department of Justice FY 2000 program priorities.
- Compliance with performance requirements of prior grant years.
- Compliance with fiscal and regulatory requirements.
- Compliance with any special conditions of the award.
- Availability of funds (based on appropriations and program priority determinations).

In accordance with Section 262 (d)(1)(B) of the JJDP Act, as amended, 42 U.S.C. § 5665a, the competitive process for the award of Part C funds is not required if the Administrator makes a written determination waiving the competitive process:

1. With respect to programs to be carried out in areas in which the President declares under the Robert T. Stafford Disaster Relief and Emergency Assistance Act codified at 42 U.S.C. § 5121 *et seq.* that a major disaster or emergency exists, or

2. With respect to a particular program described in Part C that is uniquely qualified.

Introduction to Fiscal Year 2000 Program Plan

In administering the discretionary grants program under Parts C and D of Title II, OJJDP has identified four goals as the major elements of a sound policy that ensures public safety and security while establishing effective juvenile justice and delinquency prevention programs. Achieving these goals, which are discussed below, is vital to protecting the long-term safety of the public from juvenile delinquency and violence.

- OJJDP promotes *delinquency prevention and early intervention* efforts that reduce the flow of juvenile offenders into the juvenile justice system, the numbers of serious and violent offenders, and the development of chronic delinquent careers. While removing serious and violent juvenile offenders from the street serves to protect the public, long-term solutions lie primarily in taking aggressive steps to stop delinquency before it starts or becomes a pattern of behavior.
- OJJDP seeks to *improve the juvenile justice system* and the response of the system to juvenile delinquents, status offenders, and dependent, neglected, and abused children.
- OJJDP supports efforts in the area of *corrections, detention, and community-based alternatives* to preserve the public safety in a manner that serves the appropriate development and best use of secure detention and corrections options, while at the same time fostering the use of community-based programs for juvenile offenders.
- OJJDP seeks to *support law enforcement, public safety, and other justice agency efforts* to prevent juvenile delinquency, intervene in the development of chronic delinquent careers, and collaborate with the juvenile justice system to meet the needs of dependent, neglected, and abused children.

In 1993, OJJDP published its *Comprehensive Strategy for Serious, Violent, and Chronic Juvenile Offenders*, which set forth a research-based comprehensive approach for addressing the problems of juvenile crime and victimization and for achieving its program goals. The Comprehensive Strategy was developed to assist States and local communities in preventing at-risk youth from becoming serious, violent, and chronic juvenile offenders and in crafting a practical response to those who do. Over the past few years, OJJDP has tested and refined the prevention and graduated sanctions components of the Comprehensive Strategy. In 1996, OJJDP began assisting three pilot sites to formulate the Comprehensive Strategy plans at the local level. Lessons learned from those sites are being used in eight States to implement a strategic planning and implementation process through State partnerships with up to six local jurisdictions that are developing and implementing their own comprehensive strategies.[2]

This Proposed Plan also supports the Coordinating Council's 1996 National Juvenile Justice Action Plan, which grew out of the Comprehensive Strategy. This Action Plan, which the Coordinating Council is currently updating, provides eight objectives to reduce juvenile violence and describes ways to meet these objectives. Together, the Comprehensive Strategy and the Action Plan constitute a sound strategy for translating innovation and research findings to infrastructure.

Continuation Programs

OJJDP organizes its proposed programs under four broad categories that reflect its program goals and the principles of the Comprehensive Strategy. The following summaries briefly describe some of the types of activities proposed for continuation funding in each category, subject to the appropriations for Parts C and D for FY 2000.

Public Safety and Law Enforcement

Eight programs related to the important public policy issue of proliferating youth gangs are a major focus of OJJDP's proposals in this category. The programs range from demonstrations and replications of models to technical assistance and from evaluation to data collection and analysis. Funds would also be provided to a partnership between youth and health services agencies to continue school-based activities and efforts to address the effects on children of exposure to domestic violence. Two programs deal with a problem of increasing public concern, gun violence. An evaluation is looking at the effect of transferring the responsibility for child protective investigations to law enforcement agencies.

Delinquency Prevention and Intervention

OJJDP proposes to fund a range of programs that focus on reducing risk factors and increasing protective factors in children's lives. The types of programs include demonstrations, pilots, and replications of model programs; outreach; studies and evaluations; and training and technical assistance. Beginning with early programs such as prenatal nurse home visitation, OJJDP's delinquency prevention and intervention efforts feature arts programs for at-risk youth and for those in detention and corrections facilities; programs that assess the role of alcohol, illegal drugs, mental health problems, and learning disorders in juvenile delinquency and programs that study effective interventions for these risk factors. Funding is also proposed for programs to reduce truancy and keep students from dropping out of school, conflict resolution programs, programs that discourage violence and hatred, and programs that provide opportunities for positive development and promote public awareness of effective solutions to juvenile crime.

[2] For more information about the Comprehensive Strategy, readers can request a copy of OJJDP Fact Sheet No. 9883, *An Update on the Comprehensive Strategy for Serious, Violent, and Chronic Juvenile Offenders*, by calling the Juvenile Justice Clearinghouse at 800–638–9736. Additional information is available from the Comprehensive Strategy program section of OJJDP's Web site at www.ojjdp.ncjrs.org/strategy/index.html.

Strengthening the Juvenile Justice System

In this category, OJJDP proposes to support efforts to develop comprehensive approaches to juvenile justice and delinquency prevention, including programs designed to reform juvenile justice systems in specific locations. Some programs attempt to increase youth's accountability for their behavior and to prevent violence, while others seek to improve the quality of youth's legal representation and the equity and efficiency of the treatment of youth (including girls and minorities) at all points within the juvenile justice system, including points where the justice and mental health systems intersect and the time when youth return to the community from residential facilities. In addition, OJJDP would fund programs focusing on providing the information base necessary for sound policymaking. Examples include censuses and surveys of juveniles in facilities and on probation, an accurate program directory for use in the censuses and surveys, and a data analysis project.

Child Abuse and Neglect and Dependency Courts

Three programs fall within this category: Safe Kids/Safe Streets: Community Approaches to Reducing Abuse and Neglect and Preventing Delinquency, its national evaluation, and a research program focusing specifically on the issue of child neglect.

Overarching

In addition to the activities in the four categories described above, OJJDP supports programs in a broader, overarching category. These are programs with significant elements common to more than one of the other four categories. Among the overarching programs is a major longitudinal study of the causes and correlates of delinquency, which is also providing an opportunity for an examination of the intergenerational transmission of antisocial behavior. School violence is addressed by a university-based consortium and by a national resource center. One initiative is assisting six communities in implementing comprehensive programs to reduce youth violence and delinquency. Another program is evaluating a demonstration program for reducing truancy. Research-based guidance will be provided to States and others to improve juvenile justice services for students with disabilities. OJJDP proposes to continue a crime prevention center whose tasks include investigating the reasons for the overrepresentation of minorities in the Texas juvenile justice system. Finally, national-level statistical support, training and technical assistance programs, and a clearinghouse are included in the overarching category, as are an OJJDP management evaluation contract and telecommunications assistance.

Descriptions of the specific programs in each of the five categories follow the discussion of new programs.

New Programs

As stated earlier, because this Proposed Plan is being published before the FY 2000 appropriation is enacted, possible new programming can be discussed only in the most general terms. If there should be sufficient funding to support new programs in addition to those proposed for continuation funding, OJJDP is considering 10 broad areas in which new programs might be funded in FY 2000. The public is asked to comment on these proposed areas, which are described briefly below.

1. Improving the Juvenile Sanctioning System

OJJDP is considering several efforts to improve the juvenile sanctioning system. As a result of new State laws over the past decade, juvenile correctional systems are increasingly being burdened with older, more violent offenders, while still having responsibility to serve less serious offenders. Areas of interest for possible new programs concerning sanctions include screening and assessment, key clinical issues, school-based probation services, educational needs of juveniles in corrections and detention, training and technical assistance for juvenile probation officers, improvements in and alternatives to detention, and correctional treatment and transition programs for juvenile offenders.

2. Developing and Studying Programs Addressing Female Offenders

OJJDP proposes to support demonstration projects to test promising programs that target the unique needs of female offenders. Recent research indicates that females have become increasingly involved in more serious and violent delinquent behavior, but research on female delinquency is often secondary to the study of males. Although male and female delinquents experience many of the same problems (e.g., chaotic home environments, poverty, substance abuse), female offenders have unique needs (e.g., sexual abuse and teen pregnancy) that challenge the ability of the justice system to provide appropriate treatment.

3. Monitoring and Understanding the ''Whys'' Behind Juvenile Crime Trends

OJJDP is considering support for a rigorous study to better understand juvenile crime trends. Numerous explanations have been offered for the recent decline in the juvenile violent crime rate but none with a solid empirical basis. A local-level inquiry would explore a wide range of factors including policy, programmatic and community initiatives, and other potential variables that may help explain community trends. Both retrospective and prospective approaches are contemplated for better understanding juvenile crime trends.

4. Developing Blueprint Programs Through Replication and Evaluation

Another effort under consideration involves building on the work currently being done through the Blueprints for Violence Prevention project at the Center for the Study and Prevention of Violence (CSPV) at the University of Colorado. In the course of identifying 10 effective ''blueprint'' programs, CSPV also found a number of highly promising programs that fit some, but not all, of its criteria for proven effectiveness. OJJDP is considering funding a new project that would replicate some of these promising programs in communities that demonstrate a capacity to implement and rigorously evaluate them, with the goal of increasing the number of programs that communities can confidently implement to reduce their levels of youth violence, substance abuse, and delinquency through prevention, early intervention, and treatment.

5. Replicating Effective Juvenile Delinquency Prevention and Treatment Program Models on Native American Tribal Lands and in Alaskan Native Communities

In this program area, OJJDP would support an effort to assist Native American tribes in adapting a selected group of program models proven to be effective in communities outside Native American settings. The process would draw on ethnographic and applied behavioral science skills and techniques. The end products would include a replicable process to facilitate future tribal adaption and a set of ''generic'' program models with potential permutations reflecting variations across Native American cultures. Four tribes funded by OJJDP

from 1992 to 1995 demonstrated that Native American tribes and Alaskan Native communities can benefit from assistance designed to accelerate program development but that they require a significant level of technical assistance rooted in understanding of Native American culture, history, and tradition.

6. Developing and Evaluating Model Practices Regarding the Efficacy of Delinquency and Dependency Courts

OJJDP is considering two efforts to assist the juvenile court system in appropriately and efficiently handling cases involving juvenile delinquency and dependency: one would evaluate the effectiveness of model dependency courts that are being implemented throughout the United States and one would develop a model juvenile delinquency court, including effective risk and needs assessment, best practices intake and probation services, and placement options. OJJDP would determine best practices by a survey of courts.

7. Reducing Lead and Environmental Hazards

OJJDP is considering support for a coordinated, interagency prevention, education, and intervention program to build local capacity through training and technical assistance to solve the problem of lead and other environmental hazards that affect children. Funding might also be provided for a limited pilot demonstration. Children with elevated levels of lead in their blood frequently suffer from physical, neurobiological, and cognitive impairment, and possibly from later behavioral problems, including aggression and delinquency.

8. Addressing the Problem of Juvenile Sex Offending

OJJDP is considering support for an effort to inventory the research, evaluation, and treatment efforts currently under way and completed in the area of juvenile sex offending, to assess these efforts, to identify needs that might be supported in the future, and to outline an action plan to address these issues. An additional product would be an assessment of the feasibility of developing a technical assistance and training program. OJJDP would also consider support for the development of assessment instruments. Multiple efforts in the areas of research, evaluation, and service programs for juvenile sex offenders are under way, but no unified inventory exists to provide an understanding of the status of knowledge or treatment opportunities in this area, nor is there an understanding of how these activities relate to each other or build upon an existing knowledge base.

9. Developing Prevention and Treatment Programs for Status Offenders

OJJDP is considering funding programs that would identify the extent and nature of status offending, inventory best practices in addressing this behavior from around the county, and support demonstration and replication of effective programs for dealing with these offenders. Juveniles who commit status offenses (truancy, running away, curfew violations, incorrigibility, etc.) are very often taking their first steps into the juvenile justice system. Prevention and treatment at this early stage are less expensive and more effective than efforts to change subsequent delinquent behavior.

10. Supporting Field Initiated Research and Evaluation Programs

OJJDP is considering support for field-initiated research and evaluation projects that complement the new and current programs outlined in this Proposed Program Plan. OJJDP would provide funding for innovative and rigorous research that supports its mission in significant and creative ways. Topics explored in past OJJDP-funded field-initiated research include mental health issues in the juvenile justice system; juvenile sex offending; gangs; evaluation of juvenile justice programs for female juvenile offenders; juvenile justice system operations, sanctions, and treatments; and Native American juvenile justice and delinquency prevention.

Fiscal Year 2000 Programs

The programs that OJJDP proposes to fund in FY 2000 are listed alphabetically and summarized within each of the five categories: Overarching, Public Safety and Law Enforcement, Strengthening the Juvenile Justice System, Delinquency Prevention and Intervention, and Child Abuse and Neglect and Dependency Courts.

With regard to implementation sites and other descriptive data and information, program priorities within each category will be determined based on grantee performance, application quality, fund availability, and other factors.

As part of the appropriations process, Congress is likely to identify a number of programs for funding consideration with regard to the grantee(s), the amount of funds, or both. These programs will be listed in the Final Program Plan. Congress is also likely to direct OJJDP to examine certain programs, provide assistance to them if warranted, and report to the Committees on Appropriations of both the House and the Senate on its intention for each one. These programs will also be listed in the Final Program Plan.

Fiscal Year 2000 Program Listing

Overarching

Center for Students with Disabilities in the Juvenile Justice System
Coalition for Juvenile Justice
Evaluation of the Truancy Reduction Program
Hamilton Fish National Institute on School and Community Violence
Insular Area Support
Intergenerational Transmission of Antisocial Behavior Project
Juvenile Justice Clearinghouse
Juvenile Justice Statistics and Systems Development
National Resource Center for Safe Schools
National Training and Technical Assistance Center
OJJDP Management Evaluation Contract
OJJDP Technical Assistance Support Contract—Juvenile Justice Resource Center
Program of Research on the Causes and Correlates of Delinquency
SafeFutures: Partnerships To Reduce Youth Violence and Delinquency
Technical Assistance for State Legislatures
Telecommunications Assistance
Texas Juvenile Crime Prevention Center at Prairie View A&M University—Enhancing Personal Training and Understanding Minority Overrepresentation in the Juvenile Justice System
Training and Technical Assistance Coordination for the SafeFutures and Safe Kids/Safe Streets Initiatives

Public Safety and Law Enforcement

Child Development-Community-Oriented Policing (CD–CP)
Education on Gun Violence and Safety
Evaluation of the Comprehensive Community-Wide Approach to Gang Prevention, Intervention, and Suppression Program
Evaluation of the Partnerships To Reduce Juvenile Gun Violence Program
Evaluation of the Rural Gang Initiative
Evaluation of the Transfer of Responsibility for Child Protective Investigations to Law Enforcement Agencies
Gang-Free Communities Initiative
Gang Prevention Through Targeted Outreach (Boys & Girls Clubs)
Juvenile Justice Law Enforcement Training and Technical Assistance Program

National Youth Gang Center
Partnerships To Reduce Juvenile Gun Violence
Rural Gang Initiative Demonstration Sites
Technical Assistance to Gang-Free Schools and Communities Initiatives
Training and Technical Assistance for the Rural Gang Initiative

Delinquency Prevention and Intervention

Advertising Campaign—Investing in Youth for a Safer Future
America's Promise: Enhanced Collaboration
Arts and At-Risk Youth
Arts Programs for Juvenile Offenders in Detention and Corrections
Assessing Alcohol, Drug, and Mental Health Disorders
Communities in Schools—Federal Interagency Partnership
The Congress of National Black Churches: National Anti-Drug Abuse/Violence Campaign (NADVC)
A Demonstration Afterschool Program
Diffusion of State Risk-and Protective-Factor Focused Prevention
Hate Crime
Multisite, Multimodal Treatment Study of Children With Attention Deficit/Hyperactivity Disorder
National Center for Conflict Resolution Education
Nurse Home Visitation
Partnerships for Preventing Violence
Proactive Youth Program
Professional Development in Effective Classroom and Conflict Management
Risk Reduction Via Promotion of Youth Development
Strengthening Services for Chemically Involved Children, Youth, and Families
Training and Technical Assistance Program for the Arts Programs for Juvenile Offenders in Detention and Corrections Initiative
Truancy Reduction Demonstration Program

Strengthening the Juvenile Justice System

Balanced and Restorative Justice (BARJ) Training Project
Building Blocks for Youth
Census of Juveniles in Residential Placement
Circles of Care Program
Community Assessment Center
Comprehensive Children and Families Mental Health Training and Technical Assistance
Development of the Comprehensive Strategy for Serious, Violent, and Chronic Juvenile Offenders
Development of Conduct Disorder in Girls
Evaluation of the Department of Labor's Education and Training for Youthful Offenders Initiative
Evaluation of the Intensive Community-Based Aftercare Program
Evaluation of Teen Courts
Helping Communities To Promote Youth Development
Intensive Community-Based Aftercare Demonstration and Technical Assistance Program
Juvenile Defender Training, Technical Assistance, and Resource Center
The Juvenile Justice Prosecution Unit
Juvenile Residential Facility Census
Linking Balanced and Restorative Justice and Adolescents (LIBRA)
National Juvenile Justice Data Analysis Project
National Juvenile Justice Program Directory
The National Longitudinal Survey of Youth 97
Performance-Based Standards for Juvenile Correction and Detention Facilities
San Francisco Juvenile Justice Local Action Plan—Delancy Street Initiative
Survey of Juvenile Probation
Technical Assistance to Native American Tribes and Alaskan Native Communities
TeenSupreme Career Preparation Initiative
Training and Technical Support for State and Local Jurisdictional Teams To Focus on Juvenile Corrections and Detention Overcrowding

Child Abuse and Neglect and Dependency Courts

National Evaluation of the Safe Kids/Safe Streets Program
Research on Child Neglect
Safe Kids/Safe Streets: Community Approaches to Reducing Abuse and Neglect and Preventing Delinquency

Overarching

Center for Students With Disabilities in the Juvenile Justice System

During FY 1999, OJJDP undertook a joint initiative with the Office of Special Education and Rehabilitative Services, U.S. Department of Education to establish a Center for Students with Disabilities in the Juvenile Justice System. The Secretary of Education and the Attorney General expect this project to have a significant impact on the improvement of juvenile justice system services for students with disabilities. Improvements in the areas of prevention, educational services, and reintegration based on a combination of research, training, and technical assistance will lead to improved results for children and youth with disabilities. The Center for Students with Disabilities in the Juvenile Justice System will provide guidance and assistance to States, schools, justice programs, families, and communities to design, implement, and evaluate comprehensive educational programs, based on research-validated practices, for students with disabilities who are within the juvenile justice system.

This program will be implemented by the University of Maryland through an award by the U.S. Department of Education. No additional applications will be solicited in FY 2000.

Coalition for Juvenile Justice

This project supports the Coalition in its efforts to meet the statutory mandates through the development of a technical assistance capability that provides training, technical assistance, and information to the State Juvenile Justice Advisory Groups. This would be accomplished through a series of regional training and information workshops and a national conference designed to address the needs of the membership of the Coalition.

This project would be implemented by the current grantee, the Coalition for Juvenile Justice. No additional applications would be solicited in FY 2000.

Evaluation of the Truancy Reduction Demonstration Program

In FY 1999, OJJDP awarded funds to eight sites around the country to implement truancy reduction projects. These sites included Athens, GA; Contra Costa, CA; Honolulu, HA; Houston, TX; Jacksonville, FL; King County, WA; Suffolk County, NY; and Tacoma, WA. Grantees represent a diversity of models and geographic locations. OJJDP also selected the Colorado Foundation for Families and Children (CFFC) to conduct the national evaluation of the Truancy Reduction Demonstration Program. As part of the evaluation, CFFC will (1) determine how community collaboration can impact truancy reduction and lead to systemic reform, and (2) assist OJJDP in the development of a community collaborative truancy reduction program model and identify the essential elements of that model. To this end, CFFC is helping project sites to further identify and document the nature of the truancy problem in their communities, enhance the process of effective truancy reduction planning and collaboration, and incorporate that process into the implementation of the Truancy Reduction Demonstration Program at each site. In addition, CFFC is assisting sites in collecting information on truant

youth and documenting services. The project is scheduled to last 3½ years.

This project will be implemented by the current grantee, Colorado Foundation for Families and Children. No additional applications will be solicited in FY 2000.

Hamilton Fish National Institute on School and Community Violence

The Institute, with assistance from OJJDP, was founded in 1997 to serve as a national resource to test the effectiveness of school violence prevention methods and to develop more effective violence prevention strategies. The Institute's goal is to determine what works and what can be replicated to reduce violence in America's schools and their immediate communities. The Institute works with a consortium of seven universities whose key staff have expertise in adolescent violence, criminology, law enforcement, substance abuse, juvenile justice, gangs, public health, education, behavior disorders, social skills development and prevention programs. The George Washington University develops and tests violence prevention strategies in collaboration with the following universities: Eastern Kentucky University, Florida State University, Morehouse School of Medicine, Syracuse University, University of Oregon, and University of Wisconsin-Milwaukee.

This project will be implemented by the current grantee, George Washington University. No additional applications will be solicited in FY 2000.

Insular Area Support

The purpose of this statutorily required program is to provide support to the U.S. Virgin Islands, Guam, American Samoa, and the Commonwealth of the Northern Mariana Islands. Funds are available to address the special needs and problems of juvenile delinquency in these insular areas, as specified by Section 261(e) of the JJDP Act of 1974, as amended, 42 U.S.C. § 5665(e).

Intergenerational Transmission of Antisocial Behavior Project

The purpose of this project is to expand on the Rochester Youth Development Study by examining the development of antisocial behavior and delinquency in the children of the original Rochester, NY, subjects of OJJDP's Program of Research on the Causes and Correlates of Delinquency. By age 21, 40 percent of the original Rochester subjects were parents. This provides a unique opportunity to examine and track the development of delinquent behavior across three generations in a particularly high-risk sample. Results of the study should provide useful findings with policy implications for prevention programs. The program is being funded under an FY 1998 interagency agreement between OJJDP and the National Institute of Mental Health.

The project will be implemented by the current grantee, SUNY Research Foundation. No additional applications will be solicited in FY 2000.

Juvenile Justice Clearinghouse

A component of the National Criminal Justice Reference Service (NCJRS), the Juvenile Justice Clearinghouse (JJC) collects, synthesizes, and disseminates information on all aspects of juvenile justice. OJJDP established the Clearinghouse in 1979 to serve the juvenile justice community, legislators, the media, and the public. JJC offers toll-free telephone access to information; prepares specialized responses to information requests; produces, warehouses, and distributes OJJDP publications; exhibits at national conferences; maintains a comprehensive juvenile justice library and database; and administers several electronic information resources. NCJRS is administered by the National Institute of Justice (NIJ) under a competitively awarded contract to Aspen Systems Corporation.

This program will be implemented by the current contractor, Aspen Systems Corporation. No additional applications will be solicited in FY 2000.

Juvenile Justice Statistics and Systems Development Program

The Juvenile Justice Statistics and Systems Development (SSD) Program was competitively awarded in 1990 to the National Center for Juvenile Justice (NCJJ) to improve national, State, and local statistics on juveniles as victims and offenders. The SSD project has traditionally consisted of three tracks of work: National Statistics, Dissemination, and Systems Development. In FY 2000, NCJJ will continue many activities under the first two tracks, including maintaining an extensive library of data files, producing *Easy Access* software packages and the Web-based *OJJDP Statistical Briefing Book*, and continuing to service requests for juvenile justice information. In FY 2000, additional funding from OJJDP will also enable NCJJ to enhance activities under the Systems Development track of the project.

To meet the challenge of managing the cases of youth within their jurisdiction effectively and efficiently, juvenile court administrators and judges need ready access to information that will support the operation, management, and decisionmaking of the full-service juvenile court system. Knowledge and decisionmaking (which should be the hallmark of every juvenile justice system) requires not just the collection of data, but the collaboration of the community leaders who will give meaning to the data. This is the focus of the forthcoming book, *Juvenile Justice With Eyes Open*, which will be published in FY 2000 as part of the Statistics and Systems Development Project (Systems Development Track). Also in FY 2000, NCJJ will use the principles outlined in this publication to develop and field-test an approach that local jurisdictions can employ to systematically identify and then fulfill their local information needs. This includes training local juvenile justice leaders in the rational decisionmaking model (RDM) as a design tool for management information systems; developing data specifications for an effective information system to meet operational, management, and research needs; identifying data needs from collateral service providers and data that would be of use to collaterals; and modeling agreements and protocols with collateral service providers to share case-level and/or aggregate data.

This project would be implemented by the current grantee, the National Center for Juvenile Justice. No additional applications would be solicited in FY 2000.

National Resource Center for Safe Schools

Since 1984, OJJDP and the U.S. Department of Education have provided joint funding to promote safe schools. This work has focused national attention on cooperative solutions to problems that disrupt the educational process. Because an estimated 3 million incidents of crime occur in America's schools each year, it is clear that this problem continues to plague many schools, threatening students' safety and undermining the learning environment. With FY 1998 funding, the U.S. Department of Education's Safe and Drug-Free Schools Program and OJJDP established the National Resource Center for Safe Schools under a 3-year project period. This project expanded the scope and provision of previous training and technical assistance to communities and school districts across the country. The grantee is working to help schools develop and put in place comprehensive safe school plans. It does this through onsite training and consultation to schools and

communities, by creating and distributing resource materials and tools, through Web-based information services, and by partnering with State-level agencies to build State capacity to assist local education agencies. Through the inclusion on the project's Advisory Committee of representatives of Hamilton Fish National Institute on School and Community Violence and other school-related training and technical assistance providers, this project has developed training materials and information resources based on the latest research findings on effective programs and best practices.

The project will continue to be implemented by the current grantee, Northwest Regional Educational Laboratory. No additional applications will be solicited in FY 2000.

National Training and Technical Assistance Center

The National Juvenile Justice and Delinquency Prevention Training and Technical Assistance Center (NTTAC) was established in FY 1995 under a competitive 3-year project period award. NTTAC serves as a national training and technical assistance clearinghouse, inventorying and coordinating the integrated delivery of juvenile justice training and technical assistance resources and establishing a database of these resources.

NTTAC's funding in FY 1996 provided services in the form of coordinated technical assistance support for OJJDP's SafeFutures and gang program initiatives, continued promotion of collaboration between OJJDP training and technical assistance providers, developed training/technical assistance materials, and completed and disseminated the first OJJDP Training and Technical Assistance Resource Catalog.

In FY 1997, NTTAC disseminated a second, updated Training and Technical Assistance Resource Catalog; created a Web site for the Center and a ListServe for the Children, Youth and Affinity Group; held three focus groups on needs assessments; and coordinated and provided 38 instances of technical assistance in conjunction with OJJDP's training and technical assistance grantees and contractors.

In FY 1998, NTTAC finalized the jurisdictional team training and technical assistance packages on critical needs in the juvenile justice system, updated the resource catalog, facilitated the annual OJJDP training and technical assistance grantee and contractor meeting, continued to update the repository of training and technical assistance materials and the electronic database of training and technical assistance materials, and continued to respond to training and technical assistance requests from the field.

In FY 1999, NTTAC was operated by OJJDP staff with the support of the Juvenile Justice Clearinghouse, providing clearinghouse services and maintenance of the 800 number. The Fourth Grantee-Contractor meeting was conducted by OJJDP staff in Chicago and the training and technical protocols developed in 1998 were discussed for final issue. These are being finalized and will be disseminated in FY 2000. A contract was awarded to Caliber Associates to continue implementation of the Center.

This project will be implemented by the current grantee, Caliber Associates. No additional applications will be solicited in FY 2000.

OJJDP Management Evaluation Contract

This contract was competitively awarded in FY 1999 to Caliber Associates for a period of 3 years to provide OJJDP with an expert resource to perform independent program evaluations and assist in implementing evaluation activities. Evaluations may be conducted on OJJDP-funded programs and on other programs designed to prevent and treat juvenile delinquency. The time and cost of each evaluation depends on program complexity, availability of data, and purpose of the evaluation. Because the purpose of many evaluations is to inform management decisions, the completion of an evaluation and submission of a report may be required in a specific and, often, short time period.

This program will be implemented by the current contractor, Caliber Associates. No additional applications will be solicited in FY 2000.

OJJDP Technical Assistance Support Contract—Juvenile Justice Resource Center

This contract has been competitively awarded since the mid-1980's when OJJDP identified the need for technical assistance support in carrying out its mission. The Juvenile Justice Resource Center (JJRC) provides technical assistance and support to OJJDP, its grantees, and the Coordinating Council on Juvenile Justice and Delinquency Prevention in the areas of program development, evaluation, training, and research. With assistance from expert consultants, JJRC coordinates the peer review process for OJJDP grant applications and grantee reports, conducts research and prepares reports on current juvenile justice issues, plans meetings and conferences, and provides administrative support to various Federal councils and boards.

This contract will be implemented by the current contractor, Aspen Systems Corporation. No additional applications will be solicited in FY 2000

Program of Research on the Causes and Correlates of Delinquency

Since 1986, this longitudinal study has addressed a variety of issues related to juvenile violence and delinquency and has produced a massive amount of information on the causes and correlates of delinquent behavior. Three project sites participate: Institute of Behavioral Science, University of Colorado at Boulder; Western Psychiatric Institute and Clinic, University of Pittsburgh; and Hindelang Criminal Justice Research Center, University at Albany, State University of New York. The sites pursue both collaborative research efforts and site-specific research. Results from the study have been used extensively in the field of juvenile justice and contributed significantly to the development of OJJDP's Comprehensive Strategy for Serious, Violent, and Chronic Juvenile Offenders and other program initiatives.

This program will be implemented by the current grantees. No additional applications will be solicited in FY 2000.

Safe Futures: Partnerships To Reduce Youth Violence and Delinquency

OJJDP is awarding grants of up to $1.4 million annually to each of six communities for a 5-year project period that began in FY 1995, to assist in implementing comprehensive community programs designed to reduce youth violence and delinquency. Boston, MA; Contra Costa County, CA; Fort Belknap, MT (tribal site); Imperial County, CA (rural site); St. Louis, MO; and Seattle, WA, were competitively selected to receive awards under the SafeFutures program on the basis of their substantial planning and progress in community assessment and strategic planning to address delinquency.

SafeFutures seeks to prevent and control youth crime and victimization through the creation of a continuum of care in communities. This continuum enables communities to be responsive to the needs of youth at critical stages of their development by providing an appropriate range of prevention, intervention, treatment, and sanctions programs.

Each of the six sites will continue to provide a set of services that builds on community strengths and existing services and fills in gaps within their

existing continuum. These services include family strengthening; after school activities; mentoring; treatment alternatives for juvenile female offenders; mental health services; day treatment; graduated sanctions for serious, violent, and chronic juvenile offenders; and gang prevention, intervention, and suppression. During the fourth year of the project, specific attention will be given to care coordination and program sustainability.

A national evaluation is being conducted by the Urban Institute to determine the success of the initiative and track lessons learned at each of the six sites. OJJDP has also committed a cadre of training and technical assistance (TTA) resources to SafeFutures through a full-time TTA coordinator for SafeFutures and a host of partner organizations committed to assisting SafeFutures sites.

SafeFutures activities will be carried out by the six current grantees. No additional applications will be solicited in FY 2000.

Technical Assistance for State Legislatures

Since FY 1995, OJJDP has awarded annual grants to the National Conference of State Legislatures to provide relevant, timely information on comprehensive approaches in juvenile justice to aid State legislators in improving State juvenile justice systems. Nearly every State has enacted, or is considering, statutory changes affecting the juvenile justice system. This project has helped policymakers understand the ramifications and nuances of juvenile justice reform. The grant has improved capacity for the delivery of information services to legislatures. The project also supports increased communication between State legislators and State and local leaders who influence decisionmaking regarding juvenile justice issues.

The project would be implemented by the current grantee, the National Conference on State Legislatures. No additional applications would be solicited in FY 2000.

Telecommunications Assistance

OJJDP uses information technology and distance training to facilitate access to information and training for juvenile justice professionals. This cost-effective medium enhances OJJDP's ability to share with the field salient elements of the most effective or promising approaches to various juvenile justice issues. In FY 1995, OJJDP awarded a competitive grant to Eastern Kentucky University (EKU) to produce live satellite teleconferences. To date, EKU has produced 21 telecasts. In FY 1999, OJJDP continued the cooperative agreement with EKU to provide program support and technical assistance for a variety of information technologies and to explore linkages with key constituent groups to advance mutual information goals and objectives. During the past year, EKU has experimented with cybercasting ''live'' satellite videoconferences on the Internet.

This project would be implemented by the current grantee, Eastern Kentucky University. No additional applications would be solicited in FY 2000.

Texas Juvenile Crime Prevention Center at Prairie View A&M University—Enhancing Personal Training and Understanding Minority Overrepresentation in the Juvenile Justice System

This 3-year project was initially funded in FY 1998. The purpose of the program was to create the Texas Juvenile Crime Prevention Center at Prairie View A&M University (the Center) and to have the Center undertake three initial tasks. These tasks included the development of a master's degree in Forensic Psychology, the development of a training institute for the coordinators of 13 community youth development projects, and a study to investigate the factors contributing to the disproportionate representation of minority youth in the Texas juvenile justice system.

The master's degree in Forensic Psychology includes a minimum of 30 semester hours, exclusive of thesis. The development of the curriculum and an instrument to test its effectiveness will occur in the first 2 years of the grant. The courses for the master's degree will be taught in the second and third years with the testing of the effectiveness of the curriculum being completed by the end of the third year. The objectives of this curriculum development are to increase the understanding, knowledge, and skills of in-service professionals regarding juvenile behaviors; to increase the number of qualified professionals working with juvenile offenders; and to decrease the number of juveniles who become repeat offenders.

The training institute at Prairie View A&M University (PVAMU) will focus training on the coordinators of the Texas Department of Protective and Regulatory Services Community Youth Development Project. The 12 counties in Texas with the highest number of juvenile arrests were selected to design comprehensive approaches to support families and enhance the positive development of youth. PVAMU is offering the project coordinators program management and evaluation skills courses. Each year for 3 years an intensive 2-week course will be offered to the coordinators on managing and monitoring service delivery and basic research and evaluation skills development.

Funding in FY 2000 will allow PVAMU to implement and test the curriculum that has been developed in the first 2 years, hold a third 2-week seminar that develops skills in managing and monitoring services and basic research and evaluation skills of the youth development coordinators, and continue support for the study of the overrepresentation of minorities in the Waller County Juvenile Court.

The project will be implemented by the current grantee, the Texas Juvenile Crime Prevention Center at Prairie View A&M University). No additional applications will be solicited in FY 2000.

Training and Technical Assistance Coordination for the SafeFutures and Safe Kids/Safe Streets Initiatives

OJJDP would continue funding for long-term training and technical assistance to the SafeFutures and Safe Kids/Safe Streets initiatives. This coordination effort builds local capacity for implementing and sustaining effective continuum-of-care and systems chance approaches in six SafeFutures and five Safe Kids/Safe Streets sites. Project activities include assessment, identification, and coordination of the implementation of training and technical assistance needs at each of the sites and the administration of cross-site training.

This program would be implemented by the current grantee, Patricia Donahue. No additional applications would be solicited in FY 2000.

Public Safety and Law Enforcement

Child Development—Community-Oriented Policing (CD–CP)

The Child Development—Community-Oriented Policing (CD–CP) program is an innovative partnership between the New Haven Department of Police Services and the Child Study Center at the Yale University School of Medicine that addresses the psychological burdens on children, families, and the broader community as children witness increasing levels of community violence. In FY 1993, OJJDP provided support to document Yale'New Haven's child-centered, community-oriented policing model. The model consists of interrelated training of police officers, consultation, and teaming mental health

clinicians with law enforcement in intervening onsite with children and families who witness violence. OJJDP, with first-year support from the Office of Justice Programs' Bureau of Justice Assistance, funded a 3-year replication of the model in Buffalo, NY; Charlotte, NC; Nashville, TN; and Portland, OR. Other OJP components joined OJJDP in funding an expansion of CD–CP in FY 1998. This expansion moved the project into school-based activities and the area of addressing exposure to violence in domestic settings and would continue to do so in FY 2000.

This project would be continued by the current grantee, the Yale University School of Medicine, in collaboration with the New Haven Department of Police Services. No additional applications would be solicited in FY 2000.

Education on Gun Violence and Safety

OJJDP proposes to continue partnering with the Bureau of Justice Assistance to support Education on Gun Violence and Safety. This project seeks to educate gunowners and parents about how to safely use and store guns and how to protect children from gun violence. Through a coordinated communications, education, grassroots, and media campaign, the project will reach gunowners and other caring adults with important information on preventing youth's illegal access to and unlawful use of guns. In FY 2000, based upon critical communications research with gunowners, the communications campaign will disseminate appropriate educational materials.

The program will be implemented by the current grantee, the National Crime Prevention Council and the Ad Council. No additional applications will be solicited in FY 2000.

Evaluation of the Comprehensive Community-Wide Approach to Gang Prevention, Intervention, and Suppression Program

OJJDP will continue funding this evaluation in FY 2000. Under a competitive cooperative agreement awarded in FY 1995, the evaluation grantee assisted the five program sites (Bloomington, IL; Mesa, AZ; Riverside, CA; San Antonio, TX; and Tucson, AZ) in establishing realistic and measurable objectives, documenting program implementation, and measuring the impact of this comprehensive approach. It has also provided interim feedback to the program implementors and trained the local site interviewers. The grantee will continue to gather and analyze data required to evaluate the program, monitor and oversee the quality control of data, provide assistance for completion of interviews, and provide ongoing feedback to project sites.

This project will be implemented by the current grantee, the University of Chicago, School of Social Service Administration. No additional applications will be solicited in FY 2000.

Evaluation of the Partnerships To Reduce Juvenile Gun Violence Program

This project began with a competitive award in FY 1997 to document and evaluate the process of community mobilization, planning, and collaboration needed to develop a comprehensive, collaborative approach to reducing gun violence involving juveniles. The Partnerships to Reduce Juvenile Gun Violence Program is being implemented in three sites: Baton Rouge, Louisiana; Oakland, California: and Syracuse, New York. The grantee, COSMOS Corporation, would complete data collection for the impact portion of this evaluation and submit a final report in the next year. In addition to working with the three Partnership sites, COSMOS Corporation completed work in FY 1998 on the *Promising Strategies To Reduce Gun Violence* Report. COSMOS would develop a training and technical assistance protocol based on its experience with the Partnership sites and the gun violence report. This training and technical assistance package would be used with additional communities across the country that are focused on reducing gun violence through a collaborative planning process.

This evaluation and training development would be implemented by the current grantee, COSMOS Corporation. No additional applications would be solicited in FY 2000.

Evaluation of the Rural Gang Initiative

This initiative is a continuation of ongoing efforts to test OJJDP's Comprehensive Gang Model. In FY 1999, four rural sites began conducting comprehensive assessments of their local gang problem and engaging in program design to implement the Comprehensive Gang Model. These sites are Elk City, OK; Glenn County, CA; Mt. Vernon, IL; and Longview, WA.. The National Council on Crime and Delinquency (NCCD) is conducting case studies to document and analyze the 1-year community assessment and program planning efforts in the four sites. These case studies will contribute to the development of a model approach to assessment of community gang problems in rural areas. NCCD will also be developing an outcome evaluation design for sites that are funded to implement the model in subsequent years. FY 2000 funding would support the first year of the outcome evaluation.

The current grantee is the National Council on Crime and Delinquency. A decision regarding the funding mechanism to support an outcome evaluation would be made in FY 2000.

Evaluation of the Transfer of Responsibility for Child Protective Investigations to Law Enforcement Agencies

In response to concerns about the increasing demands on public child welfare agencies, the safety of children, and the effectiveness of law enforcement and social service agencies to deliver critical services, the State of Florida has passed legislation that allows for the transfer of the entire responsibility for child protective investigations to a law enforcement agency. Currently, three counties in Florida are in various stages of implementing this transfer of responsibility. This new project for FY 2000 will compare the outcomes in the three counties where responsibility is being transferred to the Sheriff's Office with three comparison counties in the State of Florida. The project will primarily be concerned with whether children are safer, whether perpetrators of severe child abuse are more likely to face criminal sanctions, and whether there are impacts on other parts of the child welfare system. Also, a thorough process evaluation will be conducted to describe and compare the implementation process across the three counties.

This project will be conducted by the School of Social Work at the University of Pennsylvania. No additional applications will be solicited in FY 2000.

Gang-Free Communities Initiative

In FY 2000, OJJDP will continue to explore the possibility of supporting up to 15 communities in assessing the youth gang problem and replicating the OJJDP Comprehensive Gang Model. Although funding levels for these projects have not yet been determined, these communities will most likely receive ''challenge'' grants or ''seed'' money to establish these programs and to conduct a self-evaluation of their efforts. Technical assistance and support will be provided to these communities through OJJDP's National Youth Gang Center.

A separate program announcement for this initiative is tentatively planned in FY 2000.

Gang Prevention Through Targeted Outreach (Boys & Girls Clubs)

The purpose of this program is to enable local Boys & Girls Clubs to prevent youth from entering gangs, intervene with gang members in the early stages of gang involvement, and divert youth from gang activities into more constructive programs. This program reflects the ongoing collaboration between OJJDP and the Boys & Girls Clubs to reduce problems of juvenile delinquency and violence. The Boys & Girls Clubs of America provides training and technical assistance to local gang prevention and intervention sites, including some at SafeFutures and OJJDP Comprehensive Gang sites, and other clubs and organizations through regional trainings and national conferences. In FY 1999, the Boys & Girls Clubs added as many as 30 new gang prevention sites, 5 new gang intervention sites, and at least 2 ''Targeted Reintegration'' sites where clubs work to provide services to youth returning to the community from juvenile correctional facilities to prevent them from returning to gangs and violence. The Boys & Girls Clubs of America will also hold a Delinquency and Gang Prevention Symposium in March 2000. A national evaluation of this program is being implemented by Public/Private Ventures.

This program would be implemented by the current grantee, the Boys & Girls Clubs of America. No additional applications would be solicited in FY 2000.

Juvenile Justice Law Enforcement Training and Technical Assistance Program

Over the past decade, alarming reports of youth violence have appeared with increasing frequency in publications and the news media. Law enforcement agencies across the Nation are responding to this sense of national emergency by changing many of their policies and practices to cope with juvenile crime and victimization.

The Juvenile Justice Law Enforcement Training and Technical Assistance Program examines adolescent violence in the United States both as a social phenomenon and a policy issue. The program covers the range of youth violence issues from crime statistics to new legislation. The program also sets forth comprehensive analysis of key areas of youth violence policy and practice: youth firearm possession and use, school violence and safety, youth-oriented community policing, gang and drug involvement, serious habitual offenders, multidisciplinary communitywide youth violence reduction strategies, police management of youth programs, tribal juvenile crime, and Chief Executive Officer responses to delinquency and violence.

Throughout the program, the core issues of youth violence are examined through an appropriate set of responses to youth violence that are consistent with effective police practice and a positive future for America's youth. In addition, key leaders from law enforcement, prosecution services, the courts, corrections, probation, and other juvenile justice agencies are offered information, materials, solutions to management issues, and technical assistance in the prevention and control of youth crime.

FY 1998 and 1999 funds supported the continuation of eight State, local, and tribal program workshops: The Chief Executive Officer Youth Violence Forum (CEO Forum); Managing Juvenile Operations (MJO); Gang, Gun, and Drug Policy; School Administrators for Effective Operations Leading to Improved Children and Youth Services (SAFE POLICY); Youth-Oriented Community Policing; Tribal Justice Training and Technical Assistance; the Serious Habitual Offender Comprehensive Action Program (SHOCAP); and the Youth Violence Reduction Comprehensive Action Program.

This program will be implemented by the current grantee, the International Association of Chiefs of Police under a cooperative agreement with OJJDP. No additional applications will be solicited in FY 2000.

National Youth Gang Center

The proliferation of gang problems over the past two decades led OJJDP to develop a comprehensive, coordinated response to America's gang problem. This response involved five program components, one of which was implementation and operation of the National Youth Gang Center (NYGC). Competitively funded with FY 1994 funds to expand and maintain the body of critical knowledge about youth gangs and effective responses to them, NYGC provides support services to the National Youth Gang Consortium, composed of Federal agencies with responsibilities in this area. NYGC is also providing technical assistance for the Rural Gang Initiative planning and assessment phase. OJJDP proposes to extend the NYGC project an additional year and provide FY 2000 funds to NYGC to (1) conduct more indepth analyses of the National Youth Gang Survey results that track changes in gang membership and gang-related crime, (2) produce timely information on the nature and scope of the youth gang problem, and (3) continue efforts to foster integration of gang-related items into other relevant surveys and national data collection efforts.

This program would be implemented by the current grantee, the Institute for Intergovernmental Research. No additional applications would be solicited in FY 2000.

Partnerships To Reduce Juvenile Gun Violence

OJJDP will award continuation grants to each of three competitively selected communities that initially received funds in FY 1997 to increase the effectiveness of existing youth gun violence reduction strategies by enhancing and coordinating prevention, intervention, and suppression strategies and strengthening linkages among community residents, law enforcement, and the juvenile justice system. Baton Rouge, LA; Oakland, CA; and Syracuse, NY, were selected to receive 3-year awards. The goals of this initiative are to reduce juveniles' illegal access to guns and address the reasons they carry and use guns in violent exchanges. A national evaluation currently under way will document the process of community mobilization, planning, and collaboration needed to develop a comprehensive, collaborative approach to reducing juvenile gun violence.

The Partnerships To Reduce Juvenile Gun Violence program will be carried out by the three current grantees, Baton Rouge, LA; Oakland, CA; and Syracuse, NY. No additional applications will be solicited in FY 2000.

Rural Gang Initiative Demonstration Sites

In FY 1999, OJJDP supported four rural communities (Elk City, OK; Glenn County, CA; Longview, WA; and Mount Vernon, IL) to conduct a comprehensive assessment of the local youth gang problem in these communities. Each site has collected relevant data from multiple sources, including police, schools, courts, and community residents, and has gathered various types of data, including gang crime data, data on the presence of risk factors for gang membership, community demographics, and community surveys and focus groups. Once data collection is complete, the communities will use these data in a comprehensive program planning process to adapt and implement the OJJDP Comprehensive Gang Model. In FY 2000, OJJDP will consider supporting these communities in the implementation of the OJJDP Comprehensive Gang Model. An

independent evaluation of this effort will also be conducted, along with technical assistance through the National Youth Gang Center.

This initiative would be implemented by the four current grantees: Elk City, OK; Glenn County, CA; Longview, WA; and Mount Vernon, IL. No additional applications will be solicited for this initiative in FY 2000.

Technical Assistance to Gang-Free Schools and Communities Initiatives

In FY 1999, OJJDP began planning for a potential school-centered gang initiative and a multisite replication of the OJJDP Comprehensive Gang Model. In FY 2000, OJJDP will consider supporting the National Youth Gang Center with funds to provide technical assistance during the developmental stages of this initiative and during the implementation of these efforts in selected communities across the country. The National Youth Gang Center is currently providing technical assistance on OJJDP's model to communities involved in OJJDP's Rural Gang Initiative and to other OJJDP grantees.

OJJDP will consider a supplemental award to the National Youth Gang Center to provide the technical assistance. No new applications will be solicited in FY 2000.

Training and Technical Assistance for the Rural Gang Initiative

In FY 1998, OJJDP provided supplemental funding support to the National Youth Gang Center to provide training and technical assistance to demonstration sites under OJJDP's Rural Gang Initiative. In FY 2000, training and technical assistance would continue to be provided to those sites chosen to implement the OJJDP Comprehensive Gang model. Training and technical assistance would focus on adapting the OJJDP model to rural jurisdictions and on implementing the model in a theoretically sound manner. Assistance would be delivered through onsite visits, conferences, meetings, and other means such as telephone and electronic media.

This initiative would be implemented by the current grantee, the National Youth Gang Center. No additional applications would be solicited in FY 2000.

Delinquency Prevention and Intervention

Advertising Campaign—Investing in Youth for a Safer Future

OJJDP would continue its support, which began in FY 1997, of the National Crime Prevention Council (NCPC) advertising campaign Investing in Youth for A Safer Future through the transfer of funds to the Bureau of Justice Assistance (BJA) under an intra-agency agreement. OJJDP and BJA are working with the NCPC Media Unit to produce, disseminate, and support effective public service advertising and related media to inform the public of effective solutions to juvenile crime and to motivate young people and adults to get involved and support these solutions. The featured solutions include effective prevention programs and intervention strategies.

The program would be administered by the Bureau of Justice Assistance through its existing grant to the National Crime Prevention Council. No additional applications would be solicited in FY 2000.

America's Promise: Enhanced Collaboration

The Presidents' Summit for America's Future held in April 1997 in Philadelphia represented the first-ever call to action by all living Presidents on a social initiative to encourage concerned citizens, communities, and the business, nonprofit, and government sectors to work together to improve the lives of children in the United States. The goals of America's Promise, the 501.c.3 established by General Colin Powell in response to this summit, state that young people should have access to five fundamental resources that are necessary to maximize their potential: (1) An ongoing relationship with a caring adult (mentor, tutor, coach); (2) safe places and structured activities during nonschool hours to learn and grow; (3) a healthy start; (4) marketable skills through effective education; and (5) an opportunity to give back through community service. Hundreds of communities and organizations have made commitments to reaching these goals. OJJDP has been supporting those commitments through its various programs and initiatives over the past 2 years but now proposes to commit funding support to America's Promise, to enhance the program's focus on volunteerism, and to support further coordination and expansion of existing community resources, service programs, and initiatives that address the needs of the Nation's children and youth.

The program will be implemented by America's Promise. No additional applications will be solicited in FY 2000.

Arts and At-Risk Youth

OJJDP is considering continuation funding for an afterschool and summer arts program that combines the arts with job training and conflict resolution skills. This project includes summer jobs or paid internships to enable youth to put into practice the job and conflict resolution skills they are learning. By combining the arts with practical life experiences, at-risk youth gain valuable insights into their own abilities and the possibilities that await them in the world of work if they continue to attend school, study, and graduate. The goal of this program is to prevent and reduce the incidence of juvenile delinquency, crime, and other problem behaviors (e.g., substance abuse, teen pregnancy, truancy, and dropping out of school) in at-risk youth 14 to 17 years old by providing a multicomponent arts program that includes life skills training, the link between art and employment, and practical experiences in the workforce. In FY 1999, in collaboration with the Bureau of Justice Assistance, the Safe and Drug-Free Schools Program of the U.S. Department of Education, the National Endowment for the Arts, and the U.S. Department of Labor, OJJDP awarded grants to three competitively selected communities (Chicago, IL; Philadelphia, PA; and Tulsa, OK) to develop and implement this pilot demonstration program in the arts. The grantees are receiving training and technical assistance support through a provider selected by the National Endowment for the Arts and OJJDP

This program would be implemented by the current grantees, Chicago, Philadelphia, and Tulsa. No additional applications would be solicited in FY 2000.

Arts Programs for Juvenile Offenders in Detention and Corrections

OJJDP would provide continuation support for arts programs for youth in juvenile detention centers and corrections facilities. This initiative is designed to increase opportunities to establish visual, performing, media, and literacy artist-in-residence programs in juvenile detention centers and corrections facilities. The corrections and detention sites are encouraging the development of these programs by convening interested arts organizations and juvenile justice agencies to provide training in arts program development to three competitively selected demonstration sites (Gainesville, TX; Riviera Beach, FL; and Rochester, NY) and three competitively selected enhancement sites (Bronx, NY; Seattle, WA; and Whittier, CA). The demonstration sites will develop and implement new arts-based programs for adjudicated youth, and the

enhancement sites will demonstrate practices that have achieved sustainable programs. In addition to being required to provide juvenile offenders in detention and corrections facilities with arts programming, sites also are required to develop collaborative arts programs for youth returning to their communities. The grantees are receiving training and technical assistance support through a provider selected by the National Endowment for the Arts and OJJDP

This program would be implemented by the six current grantees. No additional applications would be solicited in FY 2000.

Assessing Alcohol, Drug, and Mental Health Disorders Among Juvenile Detainees

This project would supplement an ongoing National Institute of Mental Health longitudinal study assessing alcohol, drug, and mental health disorders among juveniles in detention in Cook County, Illinois. The project has three primary goals: (1) to determine how alcohol, drug, and mental disorders develop over time among juvenile detainees; (2) to investigate whether juvenile detainees receive needed psychiatric services after their cases reach disposition (and they are back in the community or serving sentences); and (3) to study the development of dangerous and risky behaviors related to violence, substance use, and HIV/AIDS. The study is investigating how violence, drug use, and HIV/AIDS risk behaviors develop over time, what the antecedents of these behaviors are, and how these behaviors are interrelated. This project is unique because the sample is so large: it includes 1,833 youth from Chicago who were arrested and interviewed between 1996 and 1998. The sample is stratified by gender, race (African American, non-Hispanic white, Hispanic), and age (10–13, 14–17). Initial interviews have been completed, and extensive archival data (arrest and incarceration history, health and mental health treatment, etc.) collected on each subject. The investigators have been tracking the subjects, and are now beginning to reinterview the adolescents. Because of their extensive and thorough tracking procedures, the investigators will be able to reinterview subjects regardless of whether they are back in the community, incarcerated, or have left the immediate area. The large sample size will provide sufficient statistical power to study rarer disorders (especially comorbidity), patterns of drug use, and risky, life-threatening behaviors. OJJDP funding for this project began in FY 1998.

The project would be implemented by the current grantee, Northwestern University. No additional applications will be solicited in FY 2000.

Communities In Schools, Inc.—Federal Interagency Partnership

This program would continue an ongoing national school dropout prevention model developed and implemented by Communities In Schools, Inc. (CIS). CIS, Inc., provides training and technical assistance in adapting and implementing the CIS model in States and local communities. The model brings social, employment, mental health, drug prevention, entrepreneurship, and other resources to high-risk youth and their families in the school setting. Where they exist, CIS State organizations assume primary responsibility for local program replication during the Federal Interagency Partnership. The Partnership is based on enhancing (1) CIS, Inc., training and technical assistance capabilities; (2) CIS capability to introduce selected initiatives for youth at the local level; (3) the information dissemination capability of CIS; and (4) the capability of CIS to network with Federal agencies on behalf of State and local CIS programs. With OJJDP's support, CIS, Inc. would place a special focus within the CIS Network on family strengthening initiatives that benefit both youth and their families.

The program would be implemented by the current grantee, Communities In Schools, Inc. No additional applications would be solicited in FY 2000.

The Congress of National Black Churches: National Anti-Drug Abuse/ Violence Campaign (NADVC)

The Congress of National Black Churches (CNBC) addresses the problems of juvenile drug abuse, violence, and hate crime through its national public awareness and mobilization strategy. The strategy coordinates black religious leadership, in cooperation with the U.S. Department of Justice and other Federal agencies and organizations, to mobilize community residents to combat juvenile drug abuse and drug-related violence. The CNBC National Anti-Drug Abuse/ Violence Campaign (NADVC) is a partner in the Education Development Center's (EDC's) Juvenile Hate Crime Initiative. NADVC's training and technical assistance have helped sites leverage funds from public and private sources. The NADVC model for the development of prevention programs is easily tailored to a local community's assessment of its drug, delinquency, violence, and hate crime problems.

The program would be implemented by the current grantee, the Congress of National Black Churches. No additional applications would be solicited in FY 2000.

A Demonstration Afterschool Program

The Demonstration Afterschool Program was funded in FY 1998 as a pilot afterschool program to reduce juvenile delinquency and increase school retention. This program, known as Estrella, offers the basic building blocks that are critical for preventing juvenile delinquency and provides youth with a chance to succeed academically and physically in an environment that is conducive to learning. Through a curriculum of hands-on science and reading projects and supervised recreation, Estrella is providing a constructive alternative to afternoons of unsupervised free time. Elementary students are the target population for this effort. New Mexico Mathematics, Engineering, Science Achievement (NM MESA) provides the academic component of the program, and middle and high school students act as mentors to the elementary students in a highly interactive learning environment. The Regents of the University of New Mexico's Institute for Social Research designed this program and is evaluating it, using both qualitative and quantitative methods. This project is at two sites, Loma Linda and Desert Trail Schools in the Gadsden Independent School District, in Don Ana County, New Mexico, and serves approximately 50 middle school students and 100 elementary school students from the six Gadsden High School feeder schools.

This project will be implemented by the current grantee, the Regents of the University of New Mexico. No additional applications will be solicited in FY 2000.

Diffusion of State Risk- and Protective-Factor-Focused Prevention

Since FY 1997, OJJDP has provided funds to the National Institute on Drug Abuse, through an interagency agreement, to support this 5-year study of the public health approach to prevention, focusing on risk and protective factors for substance abuse at the State and community levels. The study is identifying factors that influence the adoption of the public health approach and assessing the association between this approach and the levels of risk and protective factors and substance abuse among adolescents. The study will also examine State substance abuse data gathered from 1988 through 2001 and use interviews

to describe the process of implementing the epidemiological risk- and protective-factor approach in Colorado, Kansas, Illinois, Maine, Oregon, Utah, and Washington.

This project will be implemented by the current grantee, the Social Development Research Group at the University of Washington School of Social Work. No additional applications will be solicited in FY 2000.

Hate Crime

Under an OJJDP grant competitively awarded in FY 1993, the Education Development Center (EDC) developed *Healing the Hate: A National Bias Crime Prevention Curriculum for Middle Schools,* a multipurpose curriculum for hate crime prevention in middle schools and other educational settings. In FY 1996, through an interagency agreement with the U.S. Department of Education, OJJDP expanded this grant to provide training and technical assistance to youth, educators, juvenile justice and law enforcement professionals, representatives of local public/private community agencies and organizations, and the faith community. In FY 1999, EDC provided training and technical assistance to new sites and further disseminated a training manual through education and juvenile justice networks. In the training area, EDC conducted a regional, multidisciplinary training for practitioners. This training presented current knowledge and best practices in the areas of hate crime prevention and response. EDC also conducted two trainings designed according to a train-the-trainers model, to create a cadre of trainers across the Nation to teach the importance of innovative, effective hate crime prevention and response strategies. Finally, EDC conducted hate crime prevention training sessions for policymakers at 15 national/State trainings targeted to reach juvenile justice, criminal justice, education, youth-serving programs, and youth. EDC also developed a hate crime prevention World Wide Web site (www.edc.org/hatecrime/html). During FY 1999, EDC produced a Spanish language version of *Healing the Hate: A National Bias Crime Prevention Curriculum for Middle Schools.* In addition, EDC established partnerships with other national organizations involved in hate crime prevention to maximize services, provide outreach opportunities, avoid duplication of efforts, and promote interdependent relationships in which referrals, information, and training are routinely exchanged.

With continuation funding in FY 2000, EDC would continue to conduct hate crime prevention training sessions for policymakers at four national/State trainings targeted to reach juvenile justice, criminal justice, education, youth-serving programs and youth; develop a civil rights and hate crime prevention guide for youth in English and Spanish for hate crime response and prevention; and develop a training/resource guide to assist juvenile justice, criminal justice educators, and other professionals who may or may not attend the OJJDP policymaker training. EDC would produce an English and Spanish version of the National Center for Hate Crime Prevention brochure and continue to build partnerships with other national organizations involved in hate crime prevention.

This project would be implemented by the current grantee, Education Development Center. No additional applications would be solicited in FY 2000.

Multisite, Multimodal Treatment Study of Children With Attention Deficit/Hyperactivity Disorder

OJJDP will transfer funds under an interagency agreement with the National Institute of Mental Health (NIMH) to support this research, funded principally by NIMH. In 1992, NIMH began a study of the long-term efficacy of stimulant medication and intensive behavioral and educational treatment for children with attention deficit/hyperactivity disorder (ADHD). Although ADHD is classified as a childhood disorder, up to 70 percent of afflicted children continue to experience symptoms in adolescence and adulthood. The study will continue through 2000 and will follow the original families and a comparison group. OJJDP's participation, which began in FY 1998, will allow for investigation into the subjects' delinquent behavior and contact with the legal system, including arrests and court referrals.

OJJDP will support this study through an interagency agreement with the National Institute of Mental Health. No additional applications will be solicited in FY 2000.

National Center for Conflict Resolution Education

Funded under a competitively awarded cooperative agreement in FY 1995, the National Center for Conflict Resolution Education works to integrate conflict resolution education (CRE) programming into all levels of education in schools, juvenile facilities, and youth-serving organizations. In FY 1998, OJJDP entered into a partnership with the U.S. Department of Education to expand and enhance this project. The grantee provides training and technical assistance through onsite training and consultation for teams from schools, communities, and juvenile facilities; by providing resource materials including *Conflict Resolution Education: A Guide to Implementing Programs in Schools, Youth-Serving Organizations, and Community and Juvenile Justice Settings* and an enhanced, interactive CD–ROM that teaches conflict resolution skills through the presentation of real-life situations that confront young people; and by partnering with State-level agencies to establish State training institutes and otherwise build local capacity to implement successful CRE programs for youth. The Center also facilitates peer-to-peer mentoring.

The project will be implemented by the current grantee, the Illinois State Bar Association—Illinois LEARN. No additional applications will be solicited in FY 2000.

Nurse Home Visitation

In FY 2000, OJJDP would continue the integration of Prenatal and Early Childhood Nurse Home Visitation into five Operation Weed and Seed sites (Clearwater, FL; Fresno, CA; Los Angeles, CA; Oakland, CA; and Oklahoma City, OK) and one combined Weed and Seed/Safe Futures site (St. Louis, MO). Operation Weed and Seed is a national initiative to make communities safe through law enforcement activities and to rebuild crime-ridden communities across the country through social services and economic redevelopment. SafeFutures is an OJJDP initiative to assist in implementing comprehensive community programs designed to reduce youth violence, delinquency, and victimization through the creation of a continuum of care in communities. The integration of the Prenatal and Early Childhood Nurse Home Visitation Program is co-funded by OJJDP, OJP's Executive Office for Weed and Seed, and the U.S. Department of Health and Human Services.

Several rigorous studies of the Prenatal and Early Childhood Nurse Home Visitation Program model indicate that it reduces the risks for early antisocial behavior and prevents problems associated with youth crime and delinquency, such as child abuse, maternal substance abuse, and maternal criminal involvement. A 15-year followup of the original Nurse Home Visitation program found that adolescents whose mothers received home visitation services over a decade earlier were less likely to have run away, been arrested, and been convicted of a crime than those whose mothers

had not received a nurse home visitor. They also had lower levels of cigarette and alcohol use.

The current program being implemented in the six sites targets low income, first-time mothers and their infants to accomplish three goals: (1) Improve pregnancy outcomes by helping women alter their health-related behaviors, including use of cigarettes, alcohol and drugs; improve their nutrition; and reduce risk factors for premature delivery; (2) improve child health and development by helping parents provide more responsible and competent care for their children; and (3) improve families' economic self-sufficiency by helping parents develop a vision for their own future, plan future pregnancies, continue their education, and find work.

The project would be implemented by the current grantee, the University of Colorado Health Services Center. No additional applications would be solicited in FY 2000.

Partnerships for Preventing Violence

This program will continue for a second year in a multiple funding agreement among OJJDP, the U.S. Department of Education, and the U.S. Department of Health and Human Services to provide support for distance training using satellite videoconferencing as the medium. The project, funded under a 3-year grant, consists of a series of six live, interactive satellite training broadcasts that focus on violence prevention programs and strategies that have proven promising or effective. The training is targeted to school and community violence prevention personnel, health care providers, law enforcement officials, and other service providers representing a variety of community-based and youth-serving organizations. To date, three events have been held with a fourth planned by October 15, 1999.

The project will be implemented by the current grantee, Harvard University School of Public Health. No additional applications will be solicited in FY 2000.

Proactive Youth Program

In FY 1998, OJJDP funded the New Mexico Proactive Youth Program. The New Mexico Police Activities League (PAL) has implemented a statewide prevention project consisting of recreational, educational, and cultural activities for at-risk youth and their families. The goal of this effort is to reduce negative behavior and promote healthy behavioral patterns among New Mexico's youth by providing activities that unite youth with law enforcement officers, educators, and other positive adult role models. PAL programs and activities are open to all youth between the ages of 5 and 18 and their families. Special outreach efforts are made to target at-risk youth, including children from persistently low-income families, children with incarcerated family members, Native American youth living on reservations, and juveniles involved in gang activities. Local PAL programs have been initiated in the following New Mexico communities: Bloomfield, Cochiti, Gallup, Las Cruces, Lordsburg, Roswell, Santa Fe, and Tohatchi. During FY 2000, additional programs will be developed in Clovis, Grants, and Silver City and in Dona Ana County. This program is being evaluated by the Regents of the University of New Mexico's Institute for Social Research. The research design includes a process and outcome evaluation that will document and assess the implementation, effectiveness, and impact of this program.

This project will be implemented by the current grantee, the Regents of the University of New Mexico. No additional applications will be solicited in FY 2000.

Professional Development in Effective Classroom and Conflict Management

This North Carolina pilot initiative was designed to improve classroom management and to assist in the creation of safe learning environments. Funds will be awarded in FY 2000 to the current grantee, the Center for the Study of School Violence, to complete the initial phase of its pilot in partnership with the University of North Carolina and the North Carolina State Board of Education. The purpose of the pilot program is to increase the ability of teachers and administrators to model and use sound conflict resolution practices by integrating skills training into preservice curriculums at North Carolina schools of education and by working with the North Carolina State Board of Education to change curriculum requirements to include conflict resolution skills training in the context of effective classroom management.

The project will be implemented by the current grantee, the Center for the Study of School Violence. No additional applications will be solicited in FY 2000.

Risk Reduction Via Promotion of Youth Development

This program, also known as Early Alliance, is a large-scale prevention study involving hundreds of African American and Caucasian children in several elementary schools in lower socioeconomic neighborhoods of Columbia, SC. This project is designed to promote coping-competence and reduce risk for conduct problems, aggression, substance use, delinquency and violence, and school failure beginning in early elementary school. Children are being followed longitudinally throughout the 5 years of the project. The program is funded through an interagency agreement with the National Institute of Mental Health (NIMH), whose grantee is the University of South Carolina. Funding has also been provided by the Centers for Disease Control and Prevention and the National Institute on Drug Abuse.

This program will be implemented under the interagency agreement with the National Institute of Mental Health by the current grantee, the University of South Carolina. No additional applications will be solicited in FY 2000.

Strengthening Services for Chemically Involved Children, Youth, and Families

The U.S. Departments of Justice and Health and Human Services (HHS) provide services to children affected by parental substance use or abuse. OJJDP administers this training and technical assistance program, which began in FY 1998, with funds transferred to OJJDP by HHS's Substance Abuse and Mental Health Services Administration, through a cooperative agreement with the Child Welfare League of America (CWLA), a nonprofit organization. CWLA recognizes that children and youth in the child welfare and juvenile justice systems are among the most at risk for developing an alcohol or other drug problem (AOD). Typically these children have more risk factors than other children and fewer protective factors. This is especially true of youth in residential placement who have often witnessed or committed violent acts, have been physically or psychologically abused, have experienced failure and truancy in school, and have mental health and substance abuse problems.

Staff members in the residential child care system often have little or no substance abuse training. CWLA's 1997 AOD survey documented that less than 25 percent of State child welfare agencies provide training to group residential staffs on recognizing and dealing with AOD problems. What further complicates this matter is that partnerships between AOD programs and child welfare facilities rarely exist, creating a lack of coordinated services for children of substance abusers and/or

for substance abusing youth in residential care.

As a 2-year project, CWLA proposes to identify five residential child welfare sites, one in each of the CWLA's five regions, to demonstrate the effectiveness of integrating AOD prevention/treatment strategies into existing child welfare and juvenile justice programs and services, in order to educate staff and improve outcomes for adolescents participating in the programs. CWLA would also provide technical assistance to other member agencies replicating the various program models identified through their evaluations of the programs.

This jointly funded project would be implemented by CWLA. No additional applications would be solicited in FY 2000.

Training and Technical Assistance Program for the Arts Programs for Juvenile Offenders in Detention and Corrections Initiative

OJJDP is collaborating with the National Endowment for the Arts in providing the technical assistance program for the Arts Programs for Juvenile Offenders in Detention and Corrections Initiative. Grady Hillman has been awarded a grant to provide technical assistance in the area of art-based programming for juvenile offenders to support program development and implementation; provide ongoing technical assistance, and publish a document on the implementation of arts programming in juvenile corrections and detention. The technical assistance will be for the purpose of ensuring focused, professional technical support for program development and implementation, including program design, artist selection and training, and interaction between the arts organizations and the juvenile justice system. The technical assistance materials that will be developed through this national initiative will provide a blueprint for communities that seek to undertake similar programs. The nature of the Arts Programs for Juvenile Offenders in Detention and Corrections affords a unique opportunity to develop new programs and enhance existing programs while creating documentation instrumentations for the juvenile justice system. The sites provided technical assistance are Bronx, NY; Gainesville, TX; Riviera Beach, FL; Rochester, NY; Seattle, WA; and Whittier, California.

This program would be implemented by the current grantee, Grady Hillman. No additional applications would be solicited in FY 2000.

Truancy Reduction Demonstration Program

In FY 1998, OJJDP, the Executive Office for Weed and Seed within the Office of Justice Programs, and the U.S. Department of Education jointly engaged in a grant program to address truancy. This program specifically outlines four major comprehensive components: (1) System reform and accountability, (2) a service continuum to address the needs of children and adolescents who are truant, (3) data collection and evaluation, and (4) a community education and awareness program from kindergarten through grade 12 that addresses the need to prevent truancy and to intervene with youth who are truant. The goals of this program are to develop and implement or expand and strengthen comprehensive truancy programs that pool education, justice system, law enforcement, social services and community resources; identify truant youth; cooperatively design and implement comprehensive, systemwide programs to meet the needs of truants; and design and maintain systems for tracking truant youth. OJJDP has awarded funds for this program to eight sites: three non-Weed-and-Seed sites received up to $100,000 each (Honolulu, HI; Jacksonville, FL; and King County, WA), and five Weed and Seed sites received up to $50,000 each (Athens, GA; Houston, TX; Martinez, CA; Tacoma, WA; and Yaphank, NY). All sites are currently involved in a 6-month planning phase.

It is anticipated that during the next 2 years, this program would focus on the development of implementation and evaluation plans that link youth and adolescents who are truant with community-based services and programs, as well as on a full implementation of the community's comprehensive systemwide plan to prevent and intervene with the problem of truancy. This program would be evaluated by the Colorado Foundation for Families and Children who would conduct a process evaluation that would identify factors contributing or impeding the successful implementation of a truancy program.

Truancy activities would be carried out by the current grantees. No additional applications would be solicited in FY 2000.

Strengthening the Juvenile Justice System

Balanced and Restorative Justice (BARJ) Training Project

The BARJ project's goal is to control juvenile delinquency through increased use of restitution, community service, and other innovative programs as part of a jurisdictionwide juvenile justice change from traditional retributive or rehabilitative system models to balanced and restorative justice orientation and procedures. The specific steps for achieving this goal involve preparation of materials and training of personnel interested in restorative justice and the ''balanced approach.'' The steps also include providing onsite technical assistance to selected State and local jurisdictions committed to implementing the balanced approach. Materials development in FY 2000 will include documents containing information on restorative justice programs, practices, and policy directions. The materials will be useful for training juvenile justice system practitioners and managers on the BARJ model and for onsite technical assistance. The training and technical assistance will be delivered at regional and national roundtables, juvenile justice conferences, and specialized workshops. ''Training of trainers'' programs will also be offered. There will be some concentration of BARJ technical assistance at the State level and on advancing judges' and prosecutors' leadership in the area of restorative justice. Further, there will be an effort to involve corporations and foundations in supporting BARJ and initial exploration of introducing BARJ in higher education.

This project will be implemented by the current grantee, Florida Atlantic University. No additional applications will be solicited in FY 2000.

Building Blocks for Youth

The goals of this initiative are to protect minority youth in the justice system and promote rational and effective juvenile justice policies. These goals are accomplished by the following components: (1) Conducting research on issues such as the impact on minority youth of new State laws and the implications of privatization of juvenile facilities by profit-making corporations; (2) undertaking an analysis of decisionmaking in the justice system and development of model decisionmaking criteria that reduce or eliminate disproportionate impact of the system on minority youth; (3) building a constituency for change at the national, State, and local levels; and (4) developing communication strategies for dissemination of information. A fifth component, direct advocacy for minority youth, is funded by sources other than OJJDP. Funding by OJJDP began in FY 1998. Youth Law Center has undertaken tasks to move this

initiative forward and will require additional time and funding to complete the initial identified goals.

This continuation will be implemented by the current grantee, the Youth Law Center. No additional applications will be solicited in FY 2000.

Census of Juveniles in Residential Placement

In FY 1997, the Census of Juveniles in Residential Placement (CJRP) replaced the biennial Census of Public and Private Juvenile Detention, Correctional, and Shelter Facilities, known as the Children in Custody census. CJRP collects detailed information on the population of juveniles who are in juvenile residential placement facilities as a result of contact with the juvenile justice system. New methods developed for CJRP are expected to produce more accurate, timely, and useful data on the juvenile population, with less reporting burden for facility respondents. The CJRP was conducted for the second time in October 1999. Data collection efforts will continue into 2000. OJJDP anticipates delivery of the final data file by the end of FY 2000.

This program would be implemented through an existing interagency agreement with the Bureau of the Census. No additional applications would be solicited in FY 2000.

Circles of Care Program

In FY 1998, the Center for Mental Health Services (CMHS) initiated a program entitled ''Circles of Care'' to build the capacity of selected Native American Tribes to develop a continuum of care for Native American youth at risk of mental health, substance abuse, and delinquency problems. As part of multiyear joint efforts with CMHS, OJJDP entered into a 3-year interagency agreement to provide funding support to the Circles of Care Program. OJJDP transferred funds in FY's 1998 and 1999 to CMHS to support the funding of one of nine sites. The Circles of Care Program is designed to facilitate the planning and development of a continuum of care.

The currently funded projects will continue in FY 2000 through an interagency agreement with the Center for Mental Health Services. No additional applications will be solicited in FY 2000.

Community Assessment Center

The Community Assessment Center (CAC) program is a multicomponent demonstration initiative designed to test the efficacy of the CAC concept. CAC's provide a 24-hour centralized point of intake and assessment for juveniles who have or are likely to come into contact with the juvenile justice system. The main purpose of a CAC is to facilitate earlier and more efficient prevention and intervention service delivery at the ''front end'' of the juvenile justice system. In FY 1997, OJJDP funded two planning grants and two enhancement grants to existing assessment centers for a 1-year project period, a CAC evaluation, and a technical assistance component.

Based on a limited competition among the four sites, in FY 1998, OJJDP provided additional funding for 12 months to one of the initial planning sites (Lee County Sheriff's Office in Lee County, FL) and to one of the initial enhancement sites (Jefferson Center for Mental Health in Jefferson County, CO). The two other sites (Human Service Associates, Inc. (HSA) in Orlando, FL, and the Denver Juvenile Court in Denver, CO) received increased funding from Juvenile Accountability Incentive Block Grant funds to develop a fully operational CAC, including all four CAC conceptual elements. Increased funding was also provided to the national evaluator, the National Council on Crime and Delinquency.

During year 2, the Lee County Sheriff's Office worked to design and implement a comprehensive management information system that will serve as the backbone of the future assessment center. The Jefferson Center for Mental Health further enhanced its assessment center by conducting an intensive review of existing assessment tools and enhancing the case management process. In addition, both Denver and Orlando (HSA) began developing fully operational CAC's.

In FY 2000, OJJDP will provide additional funding to support the full implementation of OJJDP's CAC concept to the current grantees in Denver and Orlando. No additional applications will be solicited in FY 2000.

Comprehensive Children and Families Mental Health Training and Technical Assistance

Under an FY 1999 interagency agreement, OJJDP transferred funds to the Center for Mental Health Services (CMHS) to support the new contract for training and technical assistance for the CMHS-funded Comprehensive Mental Health sites. These funds will be used to enhance the involvement of the juvenile justice system in the systems of care that are being developed in each of the CMHS-funded sites. Funds will again be transferred to CMHS in FY 2000 to support the training and technical assistance and to meet the terms of the 3-year interagency agreement.

OJJDP will support this initiative through an interagency agreement with the Center for Mental Health Services. No additional applications will be solicited in FY 2000.

Development of the Comprehensive Strategy for Serious, Violent, and Chronic Juvenile Offenders

OJJDP has been providing support for development of its Comprehensive Strategy for several years. This project will complete ongoing strategic planning efforts in two States, Oregon and Wisconsin, and provide implementation support in six States that have completed the strategic planning process. OJJDP will also explore the addition of two or more Comprehensive Strategy States in FY 2000. As in the original eight States, up to six local jurisdictions would be identified to receive Comprehensive Strategy planning training and technical assistance. OJJDP will continue to provide technical assistance to further assist States and local jurisdictions, through training and technical assistance, in developing and implementing the Comprehensive Strategy. Further development and update of the *Guide for Implementing the Comprehensive Strategy for Serious, Violent, and Chronic Juvenile Offenders* will be completed in FY 2000.

This project will be implemented by the current grantees, the National Council on Crime and Delinquency and Developmental Research and Programs, Inc. No additional applications will be solicited in FY 2000.

Development of Conduct Disorder in Girls

The purpose of this project is to examine the development of conduct disorder in a sample of 2,500 inner-city girls who are ages 6 to 8 at the beginning of the study. The study will follow the girls annually for 5 years and will provide information that is critical to the understanding of the etiology, comorbidity, and prognosis of conduct disorder in girls. This project is important because delinquency in girls has been steadily increasing over the past decade and a better understanding of the developmental processes in girls will help in identifying effective means of prevention and provide direction for juvenile justice responses to delinquent girls. The program is being funded under an FY 1999 interagency agreement between OJJDP and the National Institute of Mental Health.

The project will be implemented by the current grantee, the University of

Pittsburgh. No additional applications will be solicited in FY 2000.

Evaluation of the Department of Labor's Education and Training for Youthful Offenders Initiative

This evaluation will document the activities undertaken by two States awarded grants under the U.S. Department of Labor's (DOL's) Education and Training for Youthful Offenders Initiative. Each DOL grantee will provide comprehensive school-to-work education and training within a juvenile correctional facility and followup and job placement services as youth return to the community. It is intended that the comprehensive services developed under these grants will serve as models for other juvenile correctional facilities across the country.

The OJJDP-sponsored evaluation of these projects will be conducted in two phases. During Phase I, a process evaluation will be conducted at each site to document the extent to which educational, job training, and aftercare services were enhanced with DOL funding. Also, the feasibility of conducting an impact evaluation at each site will be determined during Phase I. Phase II will entail conducting an impact evaluation at one or both sites. For those sites where a rigorous impact evaluation can be conducted, the effects of the program on job-related skills, employment, earnings, academic performance, and recidivism will be measured.

This project will be implemented by the current grantee, the National Council on Crime and Delinquency. No additional applications will be solicited in FY 2000.

Evaluation of the Intensive Community-Based Aftercare Program

In FY 1995, OJJDP competitively awarded a grant to the National Council on Crime and Delinquency to perform a process evaluation and design an outcome evaluation of the Intensive Community-Based Aftercare Demonstration and Technical Assistance Program. In FY 1998, the project was supplemented and extended for an additional 2 years to continue the outcome evaluation, which seeks to determine the extent of the differences between the Intensive Community-Based Aftercare Program (IAP) participants and the ''regular'' parolees, the supervision and services provided to both groups, and the cost-effectiveness of IAP. Data collection is being accomplished using several methods including searching State police records to measure recidivism and analyzing State agency and juvenile court data to estimate costs.

This project will be implemented by the current grantee, the National Council on Crime and Delinquency. No additional applications will be solicited in FY 2000.

Evaluation of Teen Courts

This project, which OJJDP began in FY 1997, is measuring the effect of handling young, relatively nonserious law violators in teen courts rather than in traditional juvenile or family courts. Researchers are collecting data on several dimensions of program outcomes, including postprogram recidivism and changes in teens' perceptions of justice and their ability to make more mature judgments. Analyses of these dimensions will be used to compare youth handled in at least three separate teen court programs with those processed by the traditional juvenile justice system. In addition, the study will conduct a process evaluation of the teen court programs, exploring legal, administrative, and case processing factors that affect the ability of the programs to achieve their goals.

This evaluation will be implemented by the current grantee, the Urban Institute. No additional applications will be solicited in FY 2000.

Helping Communities To Promote Youth Development

OJJDP would continue to provide support to the Institute of Medicine/National Research Council, National Academy of Sciences for a review and synthesis of existing evidence regarding the effectiveness of community-level interventions and service programs designed to promote positive youth development. The strengths and limitations of measurement and methodologies used to evaluate these interventions will be assessed, as well as policy and programmatic implications of this research. In addition to a final report that will synthesize the work of the committee, brief summary ''fact sheets'' will be widely disseminated to policymakers, local decisionmakers, program administrators, service providers, researchers, community organizers, and other key stakeholders.

OJJDP would implement this program through an interagency agreement with the National Academy of Sciences. No additional applications would be solicited in FY 2000.

Intensive Community-Based Aftercare Dissemination and Technical Assistance Program

This initiative supports implementation, training and technical assistance, and an independent evaluation of an intensive community-based aftercare model in three competitively selected demonstration sites. The overall goal of the intensive aftercare model is to identify and assist high-risk juvenile offenders to make a gradual transition from secure confinement back into the community. The Intensive Aftercare Program (IAP) model has three distinct, yet overlapping segments: (1) prerelease and preparatory planning activities during incarceration, (2) structured transitioning involving the participation of institutional and aftercare staffs both prior to and following community reentry, and (3) long-term reintegrative activities to ensure adequate service delivery and the required level of social control. The three sites would complete 5 years of program development and implementation in FY 2000. Followup data collection would continue into FY 2000 to capture information on youth who transitioned back into the community. In late FY 1999, Johns Hopkins University, the current grantee, would shift its focus from primarily providing training and technical assistance to grantees to developing a comprehensive dissemination, training, and technical assistance effort to State juvenile justice systems throughout the United States.

The IAP project would be implemented by the current grantee, the Johns Hopkins University. No additional applications would be solicited in FY 1999.

Juvenile Defender Training, Technical Assistance, and Resource Center

In FY 1999, OJJDP competitively funded the American Bar Association (ABA) to develop and implement the Juvenile Defender Training, Technical Assistance, and Resource Center (Juvenile Defender Center) to support training and technical assistance and to serve as a clearinghouse and resource center for juvenile defenders in this country. Recognizing that a lack of training, technical assistance, and resources for juvenile defenders weakens the juvenile justice system and results in a lack of due process for juvenile offenders, OJJDP provided seed money in FY 1999 to fund the initial planning and implementation of a Juvenile Defender Center. The grantee is expected to develop a partnership with other agencies and organizations that

will provide or help develop financial resources to assist in sustaining a permanent Center. The Center will be designed to provide both general and specialized training and technical assistance to juvenile defenders in the United States. The design will also incorporate a resource center for purposes such as serving as a repository for the most recent litigation on key issues, a collection of sample briefs, and information on expert witnesses.

This project will be carried out by the current grantee, the American Bar Association. No additional applications will be solicited in FY 2000.

Juvenile Justice Prosecution Unit

This American Prosecutors Research Institute project's goal is to increase and improve prosecutor involvement in juvenile justice. The project will pursue continuing needs assessment by a working group of experienced prosecutors regarding district attorney requirements in the juvenile area. The project will design and present specialized training events for elected and appointed district attorneys and for juvenile unit chiefs. The training will deal with prosecutor leadership roles in the juvenile justice system and with the clarification or resolution of important juvenile justice issues. Such issues are expected to include juvenile policy, code revisions, resource allocation, charging, transfer to criminal courts, alternative juvenile programs, confinement, record confidentiality, and collaboration with other agencies. Training will also address certain evolving juvenile justice areas, such as community prosecution, community justice, restorative justice, community assessment centers, and mental health concerns, among others. In addition, the project will continue to develop training and reference materials pertaining to significant juvenile justice topics.

This project will be implemented by the current grantee, the American Prosecutors Research Institute. No additional applications will be solicited in FY 2000.

Juvenile Residential Facility Census

As part of a long-term relationship with the Bureau of the Census, OJJDP proposes to continue to fund the development and testing of a new census of juvenile residential facilities. This census would focus on those facilities that are authorized to hold juveniles based on contact with the juvenile justice system. From interviews with facility administrators and staff at 20 locations, project staff have produced a detailed report discussing how best to capture information on education, mental health and substance abuse treatment, health services, conditions of custody, staffing, and facility capacity. Project staff have also drafted and tested a questionnaire based on the interview results. The census was tested in October 1998. Census Bureau staff will prepare a report on the results of this test and make specific recommendations concerning changes and census implementation. In 2000, OJJDP and Census will work together to finalize the census format and data collection methods. The census will be administered for the first time in October 2000.

This project would be conducted through an interagency agreement with the Bureau of the Census, Governments Division and Statistical Research Division. No additional applications would be solicited in FY 2000.

Linking Balanced and Restorative Justice and Adolescents (LIBRA)

This project addresses effective interventions with the at-risk and delinquent youthful population of Vermont, combined with Vermont's determination to raise, support, teach, and nurture youth in their communities. As a rural state, Vermont faces many of the same issues plaguing larger, urban States, including underage drinking, drug abuse, education failure, and mental health issues. The goal of this program is to continue development of a comprehensive, integrated, balanced, and restorative system of justice for youthful offenders that holds them accountable for their actions to victims, protects the community, builds offender skills and competencies, and offers opportunities for positive connections to community members. OJJDP funding for the program began in FY 1998. Based on the Balanced and Restorative Justice (BARJ) philosophy of reparation, rather than retribution, the LIBRA project has created a network of Juvenile Reparative Boards, which hold youth immediately accountable for their actions and provide direct services to youth, parents, victims, and community members. The project will also continue to pilot Community Justice Centers, which demonstrate that the community is the core of the justice process and recognize youth as a vital part of the community. Also, a curriculum of Competency Training Classes for youthful offenders and youth at risk of delinquency will be maintained and will focus on conflict resolution, social skills, problem solving, and decisionmaking.

This program will be implemented by the current grantee, the Vermont Department of Social and Rehabilitation Services. No additional applications will be solicited in FY 2000.

National Juvenile Justice Data Analysis Project

In 1998, OJJDP established the National Juvenile Justice Data Analysis Project (NJJDAP) to serve the critical information needs of the juvenile justice community and OJJDP. The NJJDAP produces analyses and disseminates statistical information to the public and to State and local policymakers. The project serves as a principal resource to accentuate and enhance OJJDP's ability to provide quality information to the field of juvenile justice. The project uses many national data sources to examine issues critical to the juvenile justice system. The data sources used are not limited to criminal justice or juvenile justice data. In 1999, the NJJDAP has produced analyses based on the National Longitudinal Survey of Youth (NLSY), operated by the Bureau of Labor Statistics. The NLSY is a national self-report survey of youth that includes several measures of juvenile offending. Also, the NJJDAP has produced analyses of the Census of Juveniles in Residential Placement.

The project will be implemented by the current grantee, the National Center for Juvenile Justice. No additional applications will be solicited in FY 2000.

National Juvenile Justice Program Directory

To conduct its statistical functions, OJJDP must maintain a current and accurate list of all entities surveyed either in the various censuses or in surveys. This list currently consists of a complete list of juvenile residential facilities and a list of juvenile probation offices. As OJJDP expands its statistical work, it will need to expand this listing as well. The list needs to contain contact information for the various facilities or agencies and appropriate information for sampling. During 2000, the Census Bureau would continue to maintain the currently available portions of the directory and would explore expansions needed to monitor other areas of juvenile justice such as nonresidential correctional programs and juvenile court staff.

This project would be conducted through an interagency agreement with the Bureau of the Census, Governments Division. No additional applications would be solicited in FY 2000.

The National Longitudinal Survey of Youth 97

OJJDP proposes continuing to support the third round of data collection, begun

in FY 1997, by the National Longitudinal Survey of Youth 97 (NLSY97) through an interagency agreement with the Bureau of Labor Statistics (BLS). The NLSY97 is studying school-to-work transition in a nationally representative sample of 8,700 youth ages 12 to 16 years old. BLS is also collecting data on the involvement of these youth in antisocial and other behavior that may affect their transition to productive work careers. The survey provides information about risk and protective factors related to the initiation, persistence, and desistance of delinquent and criminal behavior and provides an opportunity to determine the generalizability of findings from OJJDP's Program of Research on the Causes and Correlates of Delinquency and other longitudinal studies to a nationally representative population of youth.

The program would be implemented by the BLS under an interagency agreement. No additional applications would be solicited in FY 2000.

Performance-Based Standards for Juvenile Correction and Detention Facilities

Performance-Based Standards for Juvenile Correction and Detention Facilities Program, which began with a competitive OJJDP cooperative agreement awarded to the Council of Juvenile Correctional Administrators (CJCA) in FY 1995, has developed a performance management system for the management of juvenile correctional facilities. The system provides tools for monitoring and improving outcomes in six critical facility functions: providing security, safety, order, health care, educational, and mental health programming within a context that protects individual rights. Currently, 32 facilities, including 2 State systems, have begun the implementation process, which consists of the data collection and analysis of baseline data; the development of an initial facility improvement plan, which may include financial support to make improvements; and reassessment and revision of the facility improvement plan. During FY 2000, the program itself is undergoing refinements to improve management of the process for the facilities. In addition, approximately 15 new sites will begin the process, using streamlined data collection and new diagnostic tools. In addition to working with the participating facilities during this funding period, the project will finalize the implementation model; revise instruments, as needed; and develop criteria for determining full implementation, including the testing of community release measures. Where appropriate, the project will establish performance benchmarks and develop analytical reports regarding facility and system change that has occurred in the test sites.

This program would be implemented by the current grantee, the Council of Juvenile Correctional Administrators. No additional applications would be solicited in FY 2000.

San Francisco Juvenile Justice Local Action Plan—Delancy Street Initiative

In FY 1998, OJJDP provided funding to the City and County of San Francisco, CA, to support the implementation of a comprehensive effort to reform the city's juvenile justice system. San Francisco's Comprehensive Juvenile Justice Local Action Plan, facilitated by the Delancy Street Foundation CIRCLE (Coalition to Revitalize Communities, Lives and Environments), represents the culmination of a unique, collaborative needs assessment of the existing juvenile justice system. Based on this assessment, San Francisco identified six of the most critical gaps in the juvenile justice system and proposed programs to fill those gaps: Community Assessment and Referral Center, Early Risk and Resiliency, Safe Haven, Safe Corridor, the Life Learning Academy, and the Life Learning Residential Center for Girls. These six programs originated from the needs assessment and are a product of teams composed of representatives from San Francisco and its diverse communities.

In FY 1999, OJJDP provided funding to enhance services offered at the Life Learning Residential Center (Academy), an intensive life-changing, day treatment program designed to turn around the lives of youth with multiple problems that include multigenerational poverty, gang involvement, drug abuse, disciplinary problems, and school dropouts and failure. The Academy aims to strengthen a youth's bond with his family and extended family and the community, while providing complete ''life learning'' instruction and education. Funding will also be used for program replication throughout the country.

This project will be implemented by the current grantee, the City and County of San Francisco, in FY 2000. No additional applications will be solicited in FY 2000.

Survey of Juvenile Probation

OJJDP proposes to continue to support the development of a survey of juvenile probation offices. This survey will lead directly to national estimates of the numbers of juveniles on probation at a given time. OJJDP began this effort in 1996 with assessments of current knowledge of probation and the need for information on this aspect of juvenile justice. The development efforts have so far included site visits to three State probation departments and local probation departments in those States. An additional seven States will be visited in the coming year. Based on this information, the Center for Survey Methods Research (CSMR) at the Bureau of the Census will develop a survey methodology and a survey questionnaire. The plans for this survey have expanded by necessity to include efforts (already under way under a separate agreement with the Bureau of the Census) to list and categorize juvenile probation offices nationally. Working with OJJDP, the Census Bureau will develop a list of probation offices and several categorizations of these offices to facilitate the development of a sampling scheme. In the coming year, OJJDP and the Census Bureau will continue working on the specifications for this list and continue efforts to develop the list. Also, working with the Governments Division of the Bureau of the Census, OJJDP will take the necessary preliminary steps needed to implement the survey. OJJDP anticipates the first Survey of Juvenile Probation will take place in calendar year 2002.

This project would be conducted through an interagency agreement with the Bureau of the Census. No additional applications would be solicited in FY 2000.

Technical Assistance to Native American Tribes and Alaskan Native Communities

The Technical Assistance to Native American Tribes and Alaskan Native Communities Program is designed to equip tribal governments with the necessary information and tools to enhance or develop comprehensive, systemwide approaches to reduce juvenile delinquency, violence, and victimization and increase the safety of their communities. In FY 1997, OJJDP awarded a 3-year cooperative agreement to the American Indian Development Associates (AIDA) to provide training and technical assistance to Indian nations seeking to improve juvenile justice services to children, youth, and families.

Throughout FY's 1998 and 1999, AIDA continued to provide technical assistance to Indian nations and developed information materials for Indian juvenile justice practitioners, administrators, and policymakers. Topic areas covered Indian youth gangs; personnel competency building, such as

conducting effective preadjudication investigations and preparing reports; developing protocols to implement State Children's Code provisions that affect Native American children; establishing sustainable, comprehensive community-based planning processes that focus on the needs of tribal youth; and developing and implementing culturally relevant policies, programs, and practices. The technical assistance and materials also addressed the overlapping roles and jurisdiction of Federal, State, and tribal justice systems, particularly in understanding the laws and public policies applicable to or effective in Indian communities.

In FY 2000, OJJDP would continue to promote and provide technical assistance to tribes seeking to develop and enhance their juvenile justice systems. AIDA would provide training and technical assistance in the following emphasis areas: developing a community-based secondary prevention program; developing a tribal justice probation system; developing multidisciplinary approaches to youth gang violence prevention; establishing risk assessment and classification systems; developing comprehensive strategies to handle offenders; expanding referral and service delivery systems; developing cooperative interagency and intergovernmental relationships; and developing technology to improve systems and increased access to juvenile justice information.

This program would be implemented by the current grantee, the American Indian Development Associates. No additional applications would be solicited in FY 2000.

TeenSupreme Career Preparation Initiative

In FY 1998, OJJDP, in partnership with the U.S. Department of Labor's (DOL's) Employment and Training Administration, provided funding support to the Boys & Girls Clubs of America to demonstrate and evaluate the TeenSupreme Career Preparation Initiative. This initiative provides employment training and other related services to at-risk youth through local Boys & Girls Clubs with TeenSupreme Centers. In FY 1998, DOL funds supported program staffing in the existing 41 TeenSupreme Centers, and in 1999, the number of sites was expanded to 45. These 45 clubs are provided funding support to hire an employment specialist to work with the youth. Boys & Girls Clubs of America provides intensive training and technical assistance to each site and administrative and staffing support to the program from the national office. OJJDP funds support the evaluation component of the program, which is being implemented by an independent evaluator.

This jointly funded Department of Labor and OJJDP initiative will be implemented by the current grantee, the Boys & Girls Clubs of America. No additional applications will be solicited in FY 1999.

Training and Technical Support for State and Local Jurisdictional Teams To Focus on Juvenile Corrections and Detention Overcrowding

Through systemic change within local juvenile detention systems or statewide juvenile corrections systems, this project seeks to reduce overcrowding in facilities where juveniles are held. Competitively awarded in FY 1994 to the National Juvenile Detention Association (NJDA), in partnership with the San Francisco Youth Law Center, the project provides training and technical assistance materials for use by State and local jurisdictional teams. NJDA selected three jurisdictions (Camden, NJ; Oklahoma City, OK; and the Rhode Island Juvenile Corrections System) for onsite development, implementation, and testing of procedures to reduce crowding. All three original sites have completed their work. The grantee is exploring additional sites for comprehensive training and technical assistance in FY 2000. NJDA would also be initiating its Jurisdictional Team Training Course in FY 2000 at three sites that are experiencing overcrowding in their juvenile facilities.

This project would be implemented by the current grantee, the National Juvenile Detention Association. No additional applications would be solicited in FY 2000.

Child Abuse and Neglect and Dependency Courts

National Evaluation of the Safe Kids/Safe Streets Program

OJJDP will continue funding the grant competitively awarded in FY 1997 to Westat, Inc., Rockville, MD, for a national evaluation to document and explicate the process of community mobilization, planning, and collaboration that has taken place before and during the Safe Kids/Safe Streets awards; to inform program staff of performance levels on an ongoing basis; and to determine the effectiveness of the implemented programs in achieving the goals of the Safe Kids/Safe Streets program. The initial 18-month grant began a process evaluation and an assessment of the feasibility of an impact evaluation. Westat will continue the process evaluation, which will now focus on tracking the implementation efforts at each of the sites; continue developing the national impact evaluation; and continue working with local evaluators to develop their capacity to evaluate programs. Also, Westat will add a fifth site to the evaluation.

This evaluation will be implemented by the current grantee, Westat, Inc. No additional applications will be solicited in FY 2000.

Research on Child Neglect

In FY 2000, OJJDP will join several other Federal agencies, including the Office of Justice Program's National Institute of Justice, the U.S. Department of Education, and the Department of Health and Human Services' National Institutes of Health and Administration on Children, Youth, and Families (the Neglect Consortium), in funding research projects that will enhance understanding of the etiology, extent, services, treatment, management, and prevention of child neglect. This multiagency effort addresses the lack of research focusing specifically on the issue of child neglect. Child neglect may relate to profound health consequences, place children at higher risk for a variety of diseases and conditions, and interfere with normal social, cognitive, and affective development. Thus, child neglect is a serious public health, justice, social services, and education problem, not only compromising the immediate health of the Nation's children, but also threatening their growth and intellectual development, their long-term physical and mental health outcomes, their propensity for prosocial behavior, their future parenting practices, and their economic productivity.

The research studies funded by this initiative can focus on a range of issues, including, but not limited to, the following: the antecedents of neglect; the consequences of neglect; the processes and mediators accounting for or influencing the effects of neglect; and treatment, preventive intervention, and service delivery.

This program will be implemented through an interagency agreement with the National Institutes of Health. No additional applications will be solicited in FY 2000.

Safe Kids/Safe Streets: Community Approaches To Reducing Abuse and Neglect and Preventing Delinquency

This 5½ year demonstration program is designed to foster coordinated

community responses to child abuse and neglect. Several components of the Office of Justice Programs joined in FY 1996 to develop this coordinated program response to break the cycle of early childhood victimization and later criminality and to reduce child abuse and neglect and resulting child fatalities. OJJDP awarded competitive cooperative agreements in FY 1997 to five sites (Chittenden County, VT; Huntsville, AL; Kansas City, MO; the Sault Ste. Marie Tribe of Chippewa Indians, MI; and Toledo, OH). Funds were provided by OJJDP, the Executive Office for Weed and Seed, and the Violence Against Women Office.

In FY 2000, continuation awards will be made to each of the current demonstration sites. No additional applications will be solicited in FY 2000.

The programs described above will further OJJDP's goals and help to consolidate and continue the gains made in the past few years in combating juvenile delinquency and victimization. OJJDP welcomes comments on this Proposed Program Plan.

Dated: October 8, 1999.

Shay Bilchik,

Administrator, Office of Juvenile Justice and Delinquency Prevention.

[FR Doc. 99–26797 Filed 10–14–99; 8:45 am]

BILLING CODE 4410–18–P

federal register

Friday
October 15, 1999

Part V

Department of Housing and Urban Development

24 CFR Parts 200, 203, and 234

Single Family Mortgage Insurance; Clarification of Floodplain Requirements Applicable to New Construction; Final Rule

DEPARTMENT OF HOUSING AND URBAN DEVELOPMENT

24 CFR Parts 200, 203, and 234

[Docket No. FR–4323–F–02]

RIN 2502–AH16

Single Family Mortgage Insurance; Clarification of Floodplain Requirements Applicable to New Construction

AGENCY: Office of the Assistant Secretary for Housing-Federal Housing Commissioner, HUD.

ACTION: Final rule.

SUMMARY: This final rule adopts revisions to HUD's regulations concerning flood hazard exposure and single family mortgage insurance published for public comment in a proposed rule on April 30, 1999. These revisions provide mortgagees with an additional means of complying with HUD's single family flood hazard regulations and clarify a number of provisions in HUD's single family mortgage insurance regulations. HUD considered the comments received on the April 30, 1999 proposed rule, but is adopting the revisions published in the proposed rule without change.

DATES: *Effective Date:* November 15, 1999.

FOR FURTHER INFORMATION CONTACT: Mark Holman, Chief, Mortgage Underwriting and Insurance Branch, Office of Insured Single Family Housing, U.S. Department of Housing and Urban Development, 451 Seventh Street, SW, Room 9270, Washington, DC 20410–8000; telephone (202) 708–2121 (this is not a toll-free telephone number). Hearing-or speech-impaired persons may access this number via TTY by calling the toll-free Federal Information Relay Service at (800) 877–8339.

SUPPLEMENTARY INFORMATION:

I. Background

a. The April 30, 1999 Proposed Rule

On April 30, 1999, HUD published a rule (64 FR 23480) for public comment that proposed certain revisions to HUD's regulations concerning flood hazard exposure and single family mortgage insurance. The revisions permit mortgagees to obtain an Elevation Certificate as an alternative to a final Letter of Map Amendment or Revision for submission with the Builder's Certification of Plans, Specifications, and Site when property improvements are located in a Special Flood Hazard Area. The revisions clarify that all provisions of § 200.926d(c)(4) apply to one- to four-unit homes and to communities, whether or not the community has adopted criteria for site development. The revisions also clarify that structures are subject to the same elevation requirements, whether or not they have basements. Finally, the revisions remove obsolete provisions concerning subdivisions and improved area processing and make a number of conforming changes.

b. This Final Rule

This final rule adopts the revisions published in the April 30, 1999 proposed rule without change. The public comment period for the proposed rule closed on June 29, 1999. HUD received 14 comments. Commenters included trade associations, government agencies, lending institutions, and housing developers. HUD appreciates the suggestions offered by commenters and carefully considered the issues raised by them. For the reasons discussed below, however, we have chosen not to implement these suggestions. This section of the preamble presents a summary of the issues raised by the public commenters and HUD's responses to their comments.

Comment—Require submission of other evidence of compliance in addition to elevation certificate. One commenter wrote that an elevation certificate (EC) alone does not document compliance with National Floodplain Insurance Program (NFIP) floodplain management requirements. The commenter suggested that the final rule require, in addition to an elevation certificate, the submission of other evidence from the community that indicates that property improvements comply with the community's floodplain management regulations. The commenter listed a number of documents that could be required to satisfy this requirement, including a building permit and a certificate of occupancy issued by the community.

HUD Response. HUD agrees that the EC alone does not document compliance with NFIP floodplain management requirements. We do not believe, however, that it is necessary to require additional documentation of compliance because local procedures already require these documents. For example, it is absolutely necessary for a builder to obtain a building permit from local authorities before construction commences. Similarly, all properties submitted to HUD for endorsement must have been issued an occupancy permit by local authorities prior to submission. Requiring these additional documents, therefore, is unnecessary, would be a duplication of effort, and would run counter to the principle of streamlining government processes.

Comment—Required flood insurance that is lesser of the outstanding balance of the mortgage, value of building, or maximum amount of NFIP insurance available. One commenter was concerned about the language in § 203.16a(c) that states that flood insurance must be maintained in an amount equal to either ''the outstanding balance of the mortgage, less estimated land costs, or the maximum amount of the NFIP insurance available with respect to the property improvements, whichever is less.'' The commenter wrote that subtracting the estimated land cost from the outstanding balance of the mortgage could result in situations where no flood insurance is required on a mortgaged building. The commenter suggested requiring that the amount of flood insurance be at least equal to the lesser of the outstanding balance of the mortgage, the value of the building, or the maximum amount of NFIP insurance available.

HUD Response. While HUD appreciates the commenter's suggestion, the provision contained in § 203.16a(c) is not a direct subject of this rulemaking. Consequently, we have not made any changes in response to this comment. HUD, however, will consider this issue as a subject for a future rulemaking.

Comment—HUD should conduct eight-step analysis required by Executive Order 11988. One commenter wrote that the proposed rule, in effect, waives the full eight-step process required by Executive Order 11988 (entitled ''Floodplain Management'') for individual mortgage transactions. The commenter suggested that HUD should perform an analysis applying the eight-step process to the transactions covered under the proposed rule. The commenter suggested that the analysis should balance the adverse impacts of placing fill in some floodplains against any benefits of the current rule in discouraging floodplain development by requiring letters of map amendment (LOMA) and letters of map revision (LOMR).

HUD Response. The commenter has misinterpreted HUD's regulations. The FHA single family mortgage insurance program, both for new construction (which this rule addresses) as well as for existing construction, is not subject to the requirements of Executive Order 11988. HUD regulations at 24 CFR part 55 specifically address our responsibilities and procedures regarding the Executive Order. Prior to 1993, single family new construction

was analyzed in an environmental assessment, which included the requirements of the Executive Order's eight-step analysis through HUD subdivision processing procedures. However, we terminated subdivision processing and approval in 1993. Currently, all applications for mortgage endorsement (insurance) are submitted to HUD by lenders after the structure has been built and the applicable local entity has determined that it meets floodplain and other requirements.

Comment—Clarify when flood insurance must be purchased. One commenter wrote that the preamble to the proposed rule was not clear about when flood insurance must be purchased. The commenter suggested that the preamble to the final rule should clarify that flood insurance must be purchased when an EC is submitted, but not when a LOMA or LOMR is submitted.

HUD Response. The commenter's understanding about when flood insurance must be purchased is correct. Whenever an EC is utilized, it indicates that improvements are in the base floodplain, and, therefore, flood insurance is mandatory. HUD will make this requirement clear in its processing documents and will advise lenders by issuing a Mortgagee Letter.

Comment—Clarify rule and extend comment period. Two commenters urged HUD to clarify the proposed rule and requested that HUD extend the comment period in order to accomplish this.

HUD Response. The commenters did not specify what aspects of the proposed rule needed clarification, and they gave no other justification for extending the comment period. Therefore, we have not extended the comment period. It is important to note, however, that we accepted and considered all comments received on the proposed rule, including those that were received shortly after the close of the comment period.

Comment—Permit mortgage insurance in those portions of alluvial fans that pose the same or less risk as riverine special flood hazards. A number of commenters suggested that HUD should treat alluvial fans that pose the same or less risk as riverine special flood hazards the same as riverine special flood hazards for the purpose of issuing FHA mortgage insurance. These commenters wrote that these areas pose no more severe a threat than do riverine areas, and addressing them in the final rule will open up many areas to affordable housing that have previously been closed. Two commenters suggested certain additional engineering certification requirements for allowing construction on alluvial fans.

HUD Response. HUD appreciates these commenters' concern for building affordable housing. Specific provisions concerning alluvial fans, however, are not the subject of this rulemaking. HUD's prohibition on mortgage insurance for properties in alluvial fans is based on the hazard posed by location in an alluvial fan and is not dependent on the availability from the Federal Emergency Management Agency (FEMA) of a LOMA or LOMR, which is no longer required under this rule. Adding provisions to specifically address alluvial fans in this rule would require the publication of a new proposed rule for public comment, which would delay the publication of this final rule. In addition, any decision to permit alluvial fans would require serious and detailed engineering and hydrological studies and analysis. These studies, of FEMA identified and designated alluvial fan areas, would be extremely time consuming and costly to conduct on a ''area by area'' basis. The reliance on certifications would be meaningless until such time as FEMA completes their currently ongoing studies of alluvial fans and makes a formal determination and issues guidance, requirements, and regulations regarding the safety aspects of alluvial fans that should be considered and taken into account. For the preceding reasons, we have decided not to specifically address alluvial fans in this rulemaking and have decided to proceed with the publication of this final rule.

Comment—Add provision acknowledging Voluntary Affirmative Marketing Agreement. One commenter suggested adding the following language to § 203.12(b)(3) at the end of the first paragraph:

> In lieu of submission of an Affirmative Fair Housing Marketing Plan, if the builder or developer is, either through a state or local home builder association or directly, a signatory to the Voluntary Affirmative Marketing Agreement (VAMA) between HUD and the National Association of Home Builders, the builder or developer may meet the requirement of this section by certifying to this effect on the Builder's Certification of Plans, Specifications and Site.

HUD Response. While HUD appreciates the commenter's suggestion, the suggestion is outside the scope of this rulemaking. However, it should be noted that the provision that the commenter suggests is already part of HUD procedures. Box 11 of the Builder's Certification of Plans, Specifications, & Site allows a builder to certify that they are a signatory in good standing to a Voluntary Affirmative Marketing Agreement in lieu of submission of an Affirmative Fair Housing Marketing Plan.

Comment—Include ''back-to-back'' units in § 200.926(a)(1). One commenter suggested that the language in § 200.926(a)(1) be expanded to include units that are ''back-to-back'' as well as units that are ''side-to-side.'' The commenter suggested using the language ''where the units are joined in some manner with adjacent living units.''

HUD Response. We have reviewed this suggestion, but do not believe any change or additional language is necessary. Section 200.926 applies to any one- to four-family structure, regardless of whether it is side-by-side, back-to-back, stacked, or configured as a duplex, triplex, or fourplex.

II. Findings and Certifications

Environmental Impact

A Finding of No Significant Impact (FONSI) with respect to the environment has been made in accordance with HUD regulations at 24 CFR part 50, which implement section 102(2)(C) of the National Environmental Policy Act of 1969 (42 U.S.C. 4332). The FONSI is available for public inspection and copying between 7:30 a.m. and 5:30 p.m. weekdays at the Office of the Rules Docket Clerk, Room 10276, 451 Seventh Street, SW, Washington, DC 20410.

Paperwork Reduction Act Statement

The information collection requirement contained at § 203.12 of this final rule has been approved by the Office of Management and Budget (OMB) in accordance with the Paperwork Reduction Act of 1995 (44 U.S.C. 3501–3520) and assigned OMB control number 2502–0496. An agency may not conduct or sponsor, and a person is not required to respond to, a collection of information unless the collection displays a valid control number.

Regulatory Flexibility Act

The Secretary, in accordance with section 3(a) of the Regulatory Flexibility Act (5 U.S.C. 605(b)), has reviewed this final rule before publication, and by approving it certifies that this rule would not have a significant economic impact on a substantial number of small entities.

This final rule serves two primary purposes. First, it allows mortgagees greater flexibility by permitting them to comply with floodplain requirements through the submission of an additional type of document. Second, the final rule

removes obsolete provisions and makes clarifying amendments to the regulations. These changes reflect HUD's current interpretation of its regulations and would not increase the regulations' burden. These changes are being made in order to make the regulations clearer and more accurate.

Federalism

The General Counsel, as the Designated Official under section 6(a) of Executive Order 12612 (entitled ''Federalism''), has determined that the policies contained in this final rule do not have substantial direct effects on States or their political subdivisions, on the relationship between the Federal Government and the States, or on the distribution of power and responsibilities among the various levels of government.

III. List of Subjects

24 CFR Part 200

Administrative practice and procedure, Claims, Equal employment opportunity, Fair housing, Home improvement, Housing standards, Incorporation by reference, Lead poisoning, Loan programs—housing and community development, Minimum property standards, Mortgage insurance, Organization and functions (Government agencies), Penalties, Reporting and recordkeeping requirements, Social security, Unemployment compensation, Wages.

24 CFR Part 203

Hawaiian Natives, Home improvement, Indians—lands, Loan programs—housing and community development, Mortgage insurance, Reporting and recordkeeping requirements, Solar energy.

24 CFR Part 234

Condominiums, Mortgage insurance, Reporting and recordkeeping requirements.

PART 200—INTRODUCTION TO FHA PROGRAMS

PART 203—SINGLE FAMILY MORTGAGE INSURANCE

PART 234—CONDOMINIUM OWNER MORTGAGE INSURANCE

For the reasons stated in the preamble, HUD amends 24 CFR parts 200, 203, and 234 as follows:

PART 200—INTRODUCTION TO FHA PROGRAMS

1. The authority citation for 24 CFR part 200 continues to read as follows:

Authority: 12 U.S.C. 1701–1715z–18; 42 U.S.C. 3535(d).

2. Revise § 200.926(a)(1) to read as follows:

§ 200.926 Minimum property standards for one and two family dwellings.

(a) * * * (1) *Applicable structures.* The standards identified or contained in this section, and in §§ 200.926a–200.926e, apply to single family detached homes, duplexes, three-unit homes, and to living units in a structure where the units are located side-by-side in town house fashion. Section 200.926d(c)(4) also applies to four-unit homes.

* * * * *

3. Amend § 200.926d as follows:

a. Revise paragraph (c)(1)(ii);

b. Revise paragraph (c)(1)(iii);

c. Revise paragraph (c)(4)(iv); and

d. Remove paragraph (c)(4)(vii):

§ 200.926d Construction requirements.

* * * * *

(c) * * *

(1) * * *

(ii) With the exception of paragraph (c)(4) of this section, these site design standards apply only in communities that have not adopted criteria for site development applicable to one and two family dwellings.

(iii) Single family detached houses situated on individual lots located on existing streets with utilities need not comply with the requirements of paragraphs (c)(2) and (c)(3) of this section.

* * * * *

(4) * * *

(iv)(A) In all cases in which a Direct Endorsement (DE) mortgagee or a Lender Insurance (LI) mortgagee seek to insure a mortgage on a newly constructed one-to four-family dwelling (including a newly erected manufactured home) that was processed by the DE or LI mortgagee, the DE or LI mortgagee must determine whether the property improvements (dwelling and related structures/equipment essential to the value of the property and subject to flood damage) are located in a 100-year floodplain, as designated on maps of the Federal Emergency Management Agency. If so, the DE mortgagee, before submitting the application for insurance to HUD, or the LI mortgagee, before submitting all the required data regarding the mortgage to HUD, must obtain:

(*1*) A final Letter of Map Amendment (LOMA);

(*2*) A final Letter of Map Revision (LOMR); or

(*3*) A signed Elevation Certificate documenting that the lowest floor (including basement) of the property improvements is built at or above the 100-year flood elevation in compliance with National Flood Insurance program criteria 44 CFR 60.3 through 60.6.

(B) Under the DE program, these mortgages are not eligible for insurance unless the DE mortgagee submits the LOMA, LOMR, or Elevation Certificate to HUD with the mortgagee's request for endorsement.

* * * * *

PART 203—SINGLE FAMILY MORTGAGE INSURANCE

4. The authority citation for 24 CFR part 203 continues to read as follows:

Authority: 12 U.S.C. 1709, 1710, 1715b, and 1715u; 42 U.S.C. 3535(d).

5. Revise § 203.12 to read as follows:

§ 203.12 Mortgage insurance on proposed or new construction.

(a) *Applicability.* This section applies to an application for insurance of a mortgage on a one-to four-family dwelling, unless the mortgage will be secured by a dwelling that:

(1) Was completed more than one year before the date of the application for insurance or, under the Direct Endorsement Program, was completed more than one year before the date of the appraisal; or

(2) Is being sold to a second or subsequent purchaser.

(b) *Procedures.* (1) Applications for insurance to which this section applies will be processed in accordance with procedures prescribed by the Secretary. These procedures may only provide for endorsement for insurance of a mortgage covering a dwelling that is:

(i) Approved under the Direct Endorsement Program or the Lender Insurance Program; or

(ii) Located in a subdivision approved by the Rural Housing Service.

(2) The mortgagee must submit a signed Builder's Certification of Plans, Specifications and Site (Builder's Certification). The Builder's Certification must be in a form prescribed by the Secretary and must cover:

(i) Flood hazards;

(ii) Noise;

(iii) Explosive and flammable materials storage hazards;

(iv) Runway clear zones/clear zones;

(v) Toxic waste hazards;

(vi) Other foreseeable hazards or adverse conditions (i.e., rock formations, unstable soils or slopes, high ground water levels, inadequate surface drainage, springs, etc.) that may affect the health and safety of the occupants or the structural soundness of

the improvements. The Builder's Certification must be provided to the appraiser for reference before the performance of an appraisal on the property.

(3) If a builder (or developer) intends to sell five or more properties in a subdivision, an Affirmative Fair Housing Marketing Plan (AFHMP) that meets the requirements of 24 CFR part 200, subpart M must be submitted and approved by HUD no later than the date of the first application for mortgage insurance in that subdivision. Thereafter, applications for insurance on other properties sold by the same builder (or developer) in the same subdivision may make reference to the existing previously approved AFHMP.

6. Revise § 203.16a to read as follows:

§ 203.16a Mortgagor and mortgagee requirement for maintaining flood insurance coverage.

(a) If the mortgage is to cover property improvements (dwelling and related structures/equipment essential to the value of the property and subject to flood damage) that:

(1) Are located in an area designated by the Federal Emergency Management Agency (FEMA) as a floodplain area having special flood hazards, or

(2) Are otherwise determined by the Commissioner to be subject to a flood hazard, and if flood insurance under the National Flood Insurance Program (NFIP) is available with respect to these property improvements, the mortgagor and mortgagee shall be obligated, by a special condition to be included in the mortgage commitment, to obtain and to maintain NFIP flood insurance coverage on the property improvements during such time as the mortgage is insured.

(b) No mortgage may be insured that covers property improvements located in an area that has been identified by FEMA as an area having special flood hazards, unless the community in which the area is situated is participating in the National Flood Insurance Program and such insurance is obtained by the mortgagor. Such requirement for flood insurance shall be effective one year after the date of notification by FEMA to the chief executive officer of a flood prone community that such community has been identified as having special flood hazards.

(c) The flood insurance must be maintained during such time as the mortgage is insured in an amount at least equal to either the outstanding balance of the mortgage, less estimated land costs, or the maximum amount of the NFIP insurance available with respect to the property improvements, whichever is less.

PART 234—CONDOMINIUM OWNER MORTGAGE INSURANCE

7. The authority citation for 24 CFR part 234 continues to read as follows:

Authority: 12 U.S.C. 1715b and 1715y; 42 U.S.C. 3535(d). Section 234.520(a)(2)(ii) is also issued under 12 U.S.C. 1707(a).

§ 234.1 [Amended]

8. In § 234.1, remove the words ''Mortgage insurance on proposed or new construction in a new subdivision'' and add, in their place, the words ''Mortgage insurance on proposed or new construction''.

* * * * *

Dated: October 8, 1999.

William C. Apgar,

Assistant Secretary for Housing-Federal Housing Commissioner.

[FR Doc. 99–26972 Filed 10–12–99; 3:10 pm]

BILLING CODE 4210–27–P

federal register

Friday
October 15, 1999

Part VI

Nuclear Regulatory Commission

10 CFR Part 72

Expand Applicability of Part 72 to Holders of, and Applicants for, Certificates of Compliance; Final Rule; NRC Enforcement Policy; Enforcement Action Against Nonlicensees Under 10 CFR Part 72; Notice of Policy Statement; Revision

NUCLEAR REGULATORY COMMISSION

10 CFR Part 72

RIN 3150–AF93

Expand Applicability of Part 72 to Holders of, and Applicants for, Certificates of Compliance

AGENCY: Nuclear Regulatory Commission.

ACTION: Final rule.

SUMMARY: The Nuclear Regulatory Commission (NRC) is amending its regulations to clarify the obligations of holders of, and applicants for, Certificates of Compliance (CoCs). These amendments will enhance the Commission's ability to take enforcement action against these persons when legally binding requirements are violated. This action will emphasize the safety and regulatory significance associated with violations of the regulations. In addition, a new section identifies recordkeeping and reporting requirements for certificate holders and applicants for a CoC.

EFFECTIVE DATE: This final rule is effective on December 14, 1999.

FOR FURTHER INFORMATION CONTACT: Anthony DiPalo, telephone (301) 415–6191, e-mail, ajd@nrc.gov, of the Office of Nuclear Material Safety and Safeguards, U.S. Nuclear Regulatory Commission, Washington, DC 20555–0001.

SUPPLEMENTARY INFORMATION:

Background

The Commission's regulations at 10 CFR part 72 were established to provide requirements for the issuance of licenses for the storage of spent nuclear fuel in an independent spent fuel storage installation (ISFSI) (45 FR 74693; November 12, 1980). In 1990, the Commission amended part 72 to include a process for approving the design of spent fuel storage casks and issuance of a CoC (subpart L) and for granting a general license to reactor licensees (subpart K) to use NRC-approved casks for storage of spent nuclear fuel (55 FR 29181; July 18, 1990). In the past, the Commission has experienced performance problems in the areas of design, design control, fabrication and quality control with holders of, and applicants for, a CoC under part 72. When the NRC identifies a failure to comply with part 72 requirements by these persons, the enforcement sanctions available have been limited to administrative actions.

The NRC Enforcement Policy [1] and its implementing program was established to support the NRC's overall safety mission in protecting public health and safety and the environment. Consistent with this purpose, enforcement actions are used as a deterrent to emphasize the importance of compliance with requirements and to encourage prompt identification and comprehensive correction of the violations. Enforcement sanctions consist of Notices of Violation (NOVs), civil penalties, and orders of various types. In addition to formal enforcement actions, the NRC also uses related administrative actions such as Notices of Nonconformance (NONs), Confirmatory Action Letters, and Demands for Information to supplement its enforcement program. The NRC expects licensees, certificate holders, and applicants for a CoC to adhere to any obligations and commitments that result from these actions and will not hesitate to issue appropriate orders to ensure that these obligations and commitments are met. The nature and extent of the enforcement action are intended to reflect the seriousness of the violation involved. An NOV is a written notice setting forth one or more violations of a legally binding requirement.

The Commission published a proposed rule in the **Federal Register** (63 FR 39526; July 23, 1998). The comment period ended on October 6, 1998, and four comment letters were received on the proposed rule.

Discussion

In promulgating subpart L, the NRC intended that selected part 72 provisions would apply to spent fuel storage cask certificate holders and applicants for a CoC. For example, § 72.234(b) requires that, as a condition for approval of a CoC, ''[d]esign, fabrication, testing, and maintenance of spent fuel storage casks be conducted under a quality assurance program that meets the requirements of subpart G of this part.'' However, the quality assurance (QA) requirements in subpart G refer only to licensees and applicants for licenses, and not to certificate holders. Further, some subpart L regulations apply explicitly to ''the applicant'' (*e.g.*, § 72.232) or to ''the cask vendor'' (*e.g.*, § 72.234(d)(1)). Some of these provisions are written in the passive voice so that it is not clear who is responsible for meeting the requirement (*e.g.*, § 72.236). Although CoCs are legally binding documents, certificate holders or applicants for a CoC have not clearly been brought within the scope of part 72 requirements. Because the terms ''certificate holder'' and ''applicant for a certificate of compliance'' do not appear in the above-cited part 72 regulations, the NRC has not had a clear basis to cite these persons for violations of part 72 requirements in the same way it treats licensees. When the NRC has identified a failure to comply with part 72 requirements by these persons, it has issued an NON rather than an NOV.

Although an NON and an NOV appear to be similar, the Commission prefers the issuance of an NOV because: (1) The issuance of an NOV effectively conveys to both the person violating the requirement and the public that a violation of a legally binding requirement has occurred; (2) the use of graduated severity levels associated with an NOV allows the NRC to effectively convey to both the person violating the requirement and the public a clearer perspective on the safety and regulatory significance of the violation; and (3) violation of a regulation reflects the NRC's conclusion that potential risk to public health and safety could exist.

Over the last 2 years, the Commission has observed repeated problems with the performance of several certificate holders. These problems have occurred in design, design control, fabrication and corrective action areas. Problems in these areas are typically covered under the QA program. In FY 1996, the NRC staff identified numerous instances when certificate holders and their contractors and subcontractors failed to comply with the requirements of part 72. The Commission has concluded that use of the additional enforcement sanctions, which are available in the NRC Enforcement Policy, is required to address the performance problems that have occurred in the spent fuel storage industry. Therefore, the Commission is revising part 72 to explicitly state that certificate holders and applicants for a CoC must comply with part 72 regulations.

Summary of the Proposed Rule Amendments

The following is a summary of the amendments that were discussed in the proposed rule (63 FR 39526; July 23, 1998). This summary does not include changes made in the final rule in response to public comments. A summary of the final amendments is discussed in a separate section in this notice.

[1] NUREG–1600, Revision 1, ''General Statement of Policy and Procedures for NRC Enforcement Actions,'' May 1998 (at 63 FR 26630; May 13, 1998).

Subpart A—General Provisions

Section 72.2 Scope

The term spent fuel storage cask would be added to paragraph (b) of this section. This is a conforming amendment.

Section 72.3 Definitions

The definitions for spent fuel storage cask, certificate holder, and certificate of compliance would be added to this section. The term spent fuel storage cask would be added to the existing definitions for design bases and structures, systems, and components (SSC) important to safety. The definition for design capacity would be revised to be consistent with the Commission's policy on use of metric units.

Section 72.9 Information Collection Requirements: OMB Approval

This section would be revised as a conforming amendment, because of the addition of new § 72.242.

Section 72.10 Employee Protection and

Section 72.11 Completeness and Accuracy of Information

The terms certificate holder and applicants for a Commission license or a CoC would be added for clarification.

Subpart D—Records, Reports, Inspections, and Enforcement

Section 72.86 Criminal Penalties

Paragraph (b) currently includes those sections under which criminal sanctions are not issued. This paragraph has been revised to delete the reference to § 72.236. This section is being revised to provide that failure to comply with the specific requirements for spent fuel storage cask approval would be subject to the criminal penalty provision of § 223 of the Atomic Energy Act. Similarly, certificate holders and applicants who fail to comply with the new § 72.242 (Recordkeeping and reports) would also be subject to criminal penalties. Therefore, § 72.242 will not be included in § 72.86(b).

Subpart G—Quality Assurance

Sections 72.140 Through 72.176

In the proposed rule, the term ''certificate holder and applicants for a CoC and their contractors and subcontractors'' is added, as appropriate, to these sections to define explicitly those responsibilities associated with QA requirements. In 1990, when the Commission added subparts K and L to part 72 to provide a process for approving the design of a spent fuel storage cask, which would be used under a general license, the Commission's intent was that certificate holders and applicants for a CoC follow the QA regulations of part 72. Section 72.234(b) required that activities relating to the design, fabrication, testing, and maintenance of spent fuel storage casks must be conducted under a QA program that meets the requirements of subpart G of part 72. However, the 1990 amendments to part 72 did not amend subpart G to include certificate holders and applicants for a CoC. In addition, other changes have been made to individual sections of subpart G as described below.

In § 72.140, paragraphs (a) and (b) have been revised to clarify the responsibilities of a certificate holder and a licensee with respect to who is responsible for ensuring that the QA program is properly implemented. Paragraph (c) has been revised to provide milestones for a licensee and a certificate holder when the NRC must approve their QA program. Paragraph (d) has been revised to permit use of an NRC-approved QA program that satisfies the requirements of subpart H to part 71 and subpart G of part 72, as well as an approved program under Appendix B to part 50. The notification requirement in paragraph (d) would be revised to require that the NRC be notified in accordance with the standard notification requirements contained in § 72.4.

To provide clarity, § 72.142 has been rearranged. The new paragraph (a) has been revised to indicate that all of the persons associated with QA activities for an ISFSI or a spent fuel storage cask (*i.e.*, the licensee, certificate holder, and applicants for a CoC or license, and in the proposed rule their contractors and subcontractors) are responsible for implementation of the QA program.

In § 72.144 paragraphs (a) and (b), § 72.154 paragraph (b), § 72.162, and § 72.168 paragraph (a), the term spent fuel storage cask has been added to the terms ISFSI and MRS.

Subpart L—Approval of Spent Fuel Storage Casks

Section 72.232 Inspection and Tests

This section has been reformatted by adding a new paragraph (b) and renumbering existing paragraphs (b) and (c). In paragraphs (a), (b), and (c), the term ''applicant'' has been replaced with ''certificate holder and applicant for a CoC.'' In paragraph (d), the term ''applicant'' would be replaced with ''certificate holder and applicant for a CoC.''

Paragraph (a) has been revised to permit the inspection of the premises and activities related to the design of a spent fuel storage cask as well as to the fabrication and testing of such casks. This change would be made to ensure completeness.

A new paragraph (b) includes a requirement to permit the inspection of records related to design, fabrication, and testing of spent fuel storage casks. This requirement would make clear the responsibility of certificate holders and applicants for a CoC to permit access to these records. This requirement is similar to the existing inspection and testing regulations in 10 CFR Parts 30, 40, 50, and 70.

Section 72.234 Conditions of Approval

This section has been revised to clarify who is responsible for accomplishing these requirements. The term ''cask vendor'' has been replaced with ''certificate holder.'' The term ''cask user'' has been replaced with ''the licensee using the spent fuel storage cask.'' Although the replacement term in the proposed rule was ''the general licensee using the cask'' because a specific licensee cannot utilize the provisions of subparts K and L, it is conceivable that, in the future, a specific licensee could become a user of a certified cask. Accordingly, the NRC prefers the broader term. A similar change is made in § 72.240 as proposed. Further, edits would be made in §§ 72.234 and 72.236 to clarify that all references to ''casks'' are references to ''spent fuel storage casks.'' In addition, the acronym ''CoC'' would be used in place of the term ''Certificate of Compliance,'' where appropriate.

Section 72.236 Specific Requirements for Spent Fuel Storage Cask Approval

This section has been revised to clarify who is responsible for accomplishing these requirements. A new sentence would be added at the beginning of this section to specify who has responsibility for ensuring that each of the requirements contained in paragraphs (a) through (m) is met. This section has been reissued as being subject to the criminal penalty provisions of § 223 of the Atomic Energy Act. Applicants for a CoC would not be required to ensure that the requirements of paragraphs (j) and (k) were met because these requirements apply to activities that can only occur after a cask has been fabricated, and an applicant cannot begin fabrication of a cask until a CoC has been issued (see § 72.234(c)).

Section 72.240 Conditions for Spent Fuel Storage Cask Reapproval

This section has been revised to clarify who is responsible for accomplishing these requirements. The

term ''user of a cask'' has been replaced with ''the licensee using the spent fuel storage cask'' and the term ''cask model'' has been replaced with ''design of a spent fuel storage cask.'' The term ''representative of a cask user'' has been replaced with ''the representative of the licensee using the spent fuel storage cask.'' In addition, the acronym ''CoC'' is used in place of the term ''Certificate of Compliance'' where appropriate.

Section 72.242 Recordkeeping and Reports

This new section identifies recordkeeping and reporting requirements for certificate holders and applicants for a CoC that are not already covered by the regulations in § 72.234(d). This includes records required to be kept by a condition of the CoC or records relating to design changes, nonconformances, QA audits, and corrective actions. Violations of this section are subject to the criminal penalty provisions of § 223 of the Atomic Energy Act of 1954. Paragraphs (a), (b), and (c) are similar to the recordkeeping requirements imposed on licensees in § 72.80 (a), (c), and (d).

A new requirement has been established in paragraph (d) for certificate holders to submit written reports to the NRC when they identify design or fabrication deficiencies, in structures, systems, and components that are important to safety for spent fuel storage casks that have been delivered to licensees. This requirement would inform the NRC of deficiencies that may affect existing casks and thereby potentially affect public health and safety. This requirement would be similar to the event reporting requirement imposed on licensees in § 72.75(c)(2).

Summary of Public Comments on the Proposed Rule

The NRC received four comment letters on the proposed rule. The commenters included a member of the public, one cask fabricator, and two part 72 certificate holders. Three of the four commenters favored the proposed amendments, and one was opposed. Copies of the public comments are available for review in the NRC Public Document Room, 2120 L Street, NW (Lower Level), Washington, DC 20003–1527. One commenter, a member of the public, raised many issues unrelated to this rulemaking (*e.g.*, issues that are being addressed in a separate petition for rulemaking (*i.e.*, PRM–72–3), the NRC Enforcement Policy, the NRC Inspection Program, and NRC oversight of the overall spent fuel storage program). The NRC believes these issues are beyond the scope of this rule.

A review of the comments and the Commission's responses follow:

1. *Comment:* One commenter, a certificate holder, recommended for clarity that in the proposed definition of ''certificate holder'' in § 72.3, the words ''company'' or ''organization'' replace the word ''person,'' because a certificate of compliance is not issued to a specific person.

Response: The NRC disagrees with the comment. The definition of ''person'' in the rule has the same meaning as ''person'' defined in section 11s. of the Atomic Energy Act of 1954. This definition encompasses a wide range of entities (*i.e.*, individuals, corporations, trusts, government agencies, states, and foreign governments) who may wish to apply for a part 72 license or certificate. Therefore, no change has been made in the final rule.

2. *Comment:* One commenter, a certificate holder, agreed that design changes should have appropriate controls. However, the commenter stated that it is not clear whether design changes undertaken by the certificate holder require prior NRC approval. Currently, § 72.48 identifies those changes that the licensee may make without prior NRC review, and § 72.70 addresses the licensee's responsibility to update its Safety Analysis Report (SAR). But, the rule does not apply §§ 72.48 and 72.70 to the certificate holders. The commenter stated that the rule did not address whether prior NRC approval is required for a design change made by a certificate holder that would necessitate a revision of the cask SAR, but would not specifically deviate from the CoC; and how the SAR will be updated to reflect these changes.

The commenter recommended that the proposed revision of § 72.146(c) needs clarification of when prior NRC approval is required for certificate holders and the means to control changes to the SAR that do not require a change to the CoC. The commenter believed that the most direct method to address this concern is to revise part 72 to apply §§ 72.48 and 72.70 to certificate holders. The commenter recognized that NRC intends to pursue changes to § 72.48 in the future. However, without changes to §§ 72.48 and 72.70 at this time, the commenter believes that some clarifications are necessary in order to implement the proposed revisions to § 72.146(c).

Response: The NRC agrees in part with the comment. Revising the proposed rule to add provisions to permit a certificate holder to use the provisions of § 72.48 to make changes to the design of a spent fuel storage cask, without prior NRC approval, is beyond the scope of this rulemaking. However, the Commission has approved a separate final rule on ''Changes, Tests, and Experiments'' (64 FR 53582; October 4, 1999) that addresses the issues raised by the commenter. The ''Changes, Tests, and Experiments'' final rule revises § 72.48 to permit a certificate holder to make certain changes to the design of a spent fuel storage cask, without NRC prior approval. The ''Changes, Tests, and Experiments'' final rule also revises the requirements in § 72.70 on licensees in updating their SAR; and adds requirements in a new § 72.248 on certificate holders updating their SARs.

3. *Comment:* One commenter, a certificate holder, concurs with proposed changes for clarification, but believes that the imposition of enforcement actions may not be necessary. If the NRC decides that enforcement actions are necessary, then the commenter believes that it should not apply to the subcontractors of certificate holders, because in the commenter's view: (1) It does not seem fair to extend enforcement actions to organizations which do not have a direct regulatory link to the NRC; and (2) subjecting such contractors and subcontractors to enforcement action exposes them to business risks which could cause them to refuse to become contractors and subcontractors of certificate holders or cause them to increase their prices. Another commenter believed that subjecting parties to NRC enforcement actions that have no formal regulatory connection presents severe business risks that have a real cost to small businesses and could prove detrimental to a ''rather small and highly specialized group of fabricators.''

Response: The NRC agrees with the commenters. The NRC expects that persons involved in the manufacture of a spent fuel storage cask will take full responsibility for their obligations to implement the requirements of the part 72 QA regulations. The NRC has reconsidered and now believes that the imposition of enforcement actions against contractors and subcontractors is not necessary. Section 72.148 requires that, to the extent necessary, the licensee, certificate holder, and applicants shall require contractors or subcontractors to provide a QA program consistent with Part 72. Licensees, certificate holders, and applicants are responsible for assuring that their contractors and subcontractors are implementing adequate QA programs. Therefore, the NRC has revised the final

rule to remove references to contractors and subcontractors.

4. *Comment:* One commenter, a certificate holder, raised a concern with the proposed extension of enforcement actions to cover § 72.236. Several paragraphs in this section, such as (a), (i), and (m), contain wording like ''but not limited to'' and ''to the extent practicable'' that the commenter believes are highly subjective. The commenter does not believe that certificate holders should be subject to enforcement actions based on someone's opinion regarding what is practicable.

Response: The NRC recognizes the use of wording ''but not limited to'' and ''to the extent practicable,'' could be viewed as subjective, when interpreting the regulations; however, the changes to paragraphs (a), (i), and (m) did not change the substance of § 72.236. This wording is regularly used in statutes and regulations and the NRC believes this wording will be reasonably interpreted in enforcement actions.

5. *Comment:* One commenter, a member of the public, disagreed with the proposed language in § 72.140(a) stating that she ''* * * did not like the term licensee and certificate holder being simultaneously responsible for implementing the quality assurance (QA) requirements for oversight of contractors and subcontractors activities.'' The commenter was concerned that imposing dual responsibility for the same activity was tantamount to implying that no one was responsible. The commenter believed there needed to be a clear cut line of responsibility to determine what the licensee is actually liable for.

Response: The NRC disagrees with the comment. The NRC intended that both licensees and CoC holders be held accountable for oversight of their contractor (*i.e.*, fabricator) activities and that this redundant responsibility would ensure that the spent fuel storage casks are manufactured in conformance with the approved design and part 72 QA requirements. The NRC believes that this approach will have an overall positive effect on improving quality in the manufacture of spent fuel storage casks.

6. *Comment:* One commenter, a certificate holder, agreed with the proposed change in § 72.140(c)(2) to require certificate holders to obtain NRC approval of its quality assurance program prior to commencing fabrication or testing of a spent fuel storage cask. However, this commenter also noted that § 72.140(d) states that a quality assurance program which satisfies Appendix B to part 50 is acceptable for part 72. The commenter also noted that a certificate holder may have a quality assurance program that has been approved by the NRC under part 71 or approved by the NRC for another part 72 CoC application. The commenter suggested that § 72.140(d) be revised to include a quality assurance program which has been previously approved for part 71 or part 72 as acceptable for new CoC applications under part 72.

Response: The NRC agrees with the comment. The QA requirements contained in 10 CFR part 50, appendix B; 10 CFR part 71, subpart H; and 10 CFR part 72, subpart G, are essentially equivalent. The proposed rule revises § 72.140(c), ''Approval of Programs,'' to expand this paragraph to indicate that a certificate holder must have an NRC-approved QA program before commencing fabrication or testing of a spent fuel storage cask. The NRC agrees that the definition of an ''approved'' QA program found in § 72.140(d) should include other NRC-approved QA programs. This final rule is revised to allow for the use of all NRC-approved QA programs as satisfying the requirements of subpart G.

Additionally, the language in § 72.140(d) is revised to reflect: (1) The recordkeeping requirement in § 72.174; and (2) the current location for submitting information to the NRC in § 72.4. These requirements were added to § 72.140(d) by a different rulemaking (see the final rule entitled ''Miscellaneous Changes to Licensing Requirements for the Independent Storage of Spent Fuel and High-Level Radioactive Waste'' (64 FR 33178; June 22, 1999)). The language in § 72.140(c) and (d) is revised to be consistent with paragraph (b) of this section to indicate that the requirements in these paragraphs apply to a licensee, applicant for a license, certificate holder, and applicant for a certificate, as appropriate.

7. *Comment:* One commenter, a member of the public, expressed concern with the NRC's process for issuing exemptions to the requirement in § 72.234(c).

Note: Section 72.234(c) currently prohibits beginning cask fabrication before the NRC issues a Certificate of Compliance.

Response: The NRC believes this comment is beyond the scope of this rulemaking. While § 72.234, ''Conditions for Approval,'' was revised in this rulemaking, no change to paragraph (c) of this section was proposed. Rather, this section was revised to clarify who is responsible for implementing these requirements. The process for granting an exemption to part 72 under the provisions of § 72.7, including § 72.234(c), is adequate. An amendment to § 72.234(c) specifically addressing the issue of beginning cask construction before a CoC is issued is addressed in a different rulemaking currently under development by the NRC staff (see proposed rulemaking on ''Clarification and Addition of Flexibility to Part 72,'' RIN–AG15).

8. *Comment:* One commenter, a certificate holder, raised the issue that the added requirement in § 72.242(d) requires a written report when the design or fabrication deficiency affects the ability of structures, systems, and components (SSCs) important to safety to perform their intended safety function. The commenter indicated that an individual SSC may perform more than one function. Some of these may be safety related while other functions may not serve a safety function. As an example, a coating may assist in heat removal as a function important to safety but may also serve as an aesthetic function. For this example, the proposed rule could be interpreted to require a written report addressing a deficiency associated with an aesthetic function, even though the particular component would be capable of performing its safety function. It would be an unwarranted use of industry and NRC resources to report deficiencies that do not affect a safety function. The commenter further raised the issue that the deficiency may affect the safety function of such SSCs, but the deficiency may not prevent such structure, system, or component from performing its intended safety function. As an example, a deficiency in a coating may be discovered such that the manufacturer lowers its peak heat transfer rating. However, the cask design as stated in the Safety Analysis Report may not rely upon such a high rating. It also would be an unwarranted use of industry and NRC resources to report deficiencies that do not affect the ability of the component to perform its intended safety function. The commenter suggested revising § 72.242(d) to read as follows: ''* * *deficiency affects the ability of structures, systems, and components important to safety to perform *their intended safety* function,'' (emphasis in original).

Response: The NRC agrees with the comment and the final rule has been revised to incorporate the comment.

9. *Comment:* One commenter, a cask fabricator, had two objections to the proposed rule. First, the commenter was opposed to the potential for issuance of NOVs and civil penalties against cask fabricators because they have no

responsibilities or involvement in developing the design configurations for the various spent fuel packages. Second, the commenter indicated that the proposed changes to § 72.146(a) and (b), ''Design Control,'' were troublesome because, under the current procurement process for spent fuel packages, the commenter believes fabricators are intentionally precluded from the development of front end design and licensing activities. The fabricator currently bases manufacturing planning documentation upon the adequacy of a customer provided specification package. The commenter indicated that the fabricator may or may not utilize customer provided drawings for manufacture and that where the fabricator generates the drawings the designer and/or licensee might require their review and approval, but that there is no accepted industry practice on this matter.

Response: The NRC agrees that contractors and subcontractors need not be included within the scope of the changes made in the final rule. See the response to comment number 3. Licensees and certificate holders are responsible for QA requirements through their oversight of contractors and subcontractors, and fabricators are generally contractors or subcontractors. However, if the contract calls for the fabricator to build according to a design provided by the certificate holder, the NRC expects the fabricator to do just that. The NRC needs assurance that the spent fuel storage casks are manufactured in accordance with the NRC approved design and will hold licensees and certificate holders and applicants responsible for meeting design and QA requirements. Regarding the commenter's concern on the subject of the use of civil penalties; *i.e.,* whether a civil penalty is the appropriate response to a violation of part 72, the NRC notes that this rulemaking does not provide authority for issuing a civil penalty to nonlicensees, other than under the Deliberate Misconduct Rule. The final rule does allow the use of issuance of NOV's or Orders, rather than administrative sanctions.

10. *Comment:* One commenter, a certificate holder, while agreeing with the purpose of the proposed rulemaking, raised a concern with the added requirement that identifies additional recordkeeping and reporting requirements for certificate holders. The NRC estimated the burden associated with these new requirements in the Paperwork Reduction Act Statement provided with the Supplementary Information in the proposed rule as 6 hours annually. The commenter notes that the annual burden for recordkeeping and reporting proposed by the revised part 72 would far exceed 6 hours annually. The estimate of 6 hours for annual training would be sufficient to address the training of personnel to implement these new requirements but would not be sufficient to address the actual recordkeeping and reporting. Of course, the actual burden any individual certificate holder would incur because of the required recordkeeping and reporting would vary by certificate holder. This commenter believes that the estimated burden is greater than 100 hours annually but believes that the purpose of the final rule justifies this burden.

Response: The NRC agrees with the comment. The NRC has reevaluated the recordkeeping and reporting burden estimated for § 72.242 and concluded that the commenter's estimate of 100 hours annually is reasonable. The NRC has verified with the Office of Management and Budget (OMB) that burden increase is an extremely small percentage increase of the present total 21,454-hour burden for part 72.

Summary of Final Amendments

The amended sections listed below have not changed from the proposed rule and are included in the final rule, some editorial changes to improve the organization and readability of the existing language have also been made. These are: §§ 72.2, 72.3, 72.9, 72.10, 72.86, 72.234, 72.236, 72.240, and 72.242(a), (b), and (c).

In the final rule, §§ 72.140, 72.142, 72.144, 72.146, 72.148, 72.150, 72.152, 72.154, 72.156, 72.158, 72.160, 72.162, 72.164, 72.168, 72.170, 72.172, 72.174, 72.176, and 72.232 have been revised in response to comments, and the terms ''contractor and subcontractor'' are removed. However, this action has not been taken in § 72.10 and § 72.148, in part, because the current regulation contains those terms.

Additionally, in § 72.148, text at the end of the first sentence in the current regulation was inadvertently omitted in the proposed rule. It has been restored and will read as follows: ''* * * for procurement of material, equipment, and services, *whether purchased by the licensee, certificate holder, or by their contractors and subcontractors*.'' (emphasis added)

In § 72.140 of the final rule, paragraphs (c) and (d) are revised in response to comments received on the proposed rule as follows:

Section 72.140 (c) and (d): The QA requirements contained in 10 CFR part 50, appendix B; 10 CFR part 71, subpart H; and 10 CFR part 72, subpart G, are essentially equivalent. The proposed rule revised § 72.140(c), ''Approval of Programs,'' to expand this paragraph to indicate that a certificate holder must have an NRC-approved QA program before commencing fabrication or testing of a spent fuel storage cask. The NRC agrees that the definition of an ''approved'' QA program found in § 72.140(d) should include all other NRC-approved QA programs. The final rule is revised to allow for the use of all NRC-approved QA programs as satisfying the requirements of Subpart G. Additionally, the language in § 72.140(d) is revised to reflect the recordkeeping requirement in § 72.174 and the address for submitting information in § 72.4, which were added to this section by a different rulemaking (see Miscellaneous Changes to Licensing Requirements for the Independent Storage of Spent Fuel and High-Level Radioactive Waste (see 64 FR 33178; June 22, 1999). The language in § 72.140(c) and (d) is revised to be consistent with paragraph (b) of this section to indicate that the requirements in these paragraphs apply to a licensee, applicant for a license, certificate holder, and applicant for a certificate, as appropriate.

In the final rule, § 72.242(d) is modified to accept the comment that written reports should be made when a design or fabrication deficiency affects the ability of SSCs important to safety to perform their intended safety function.

Criminal Penalties

For the purposes of Section 223 of the Atomic Energy Act (AEA), the Commission is issuing the final rule to amend 10 CFR part 72: § 72.10, 72.11, 72.140 through 72.176, 72.232, 72.234, 72.236, and 72.242, under one or more of sections 161b, 161i, or 161o of the AEA. Willful violations of the rule would be subject to criminal enforcement.

Agreement State Compatibility

Under the ''Policy Statement on Adequacy and Compatibility of Agreement State Programs'' approved by the Commission on June 30, 1997, and published in the **Federal Register** on September 3, 1997 (62 FR 46517), this rule is classified as compatibility Category ''NRC.'' Compatibility is not required for Category ''NRC'' regulations. The NRC program elements in this category are those that relate directly to areas of regulation reserved to the NRC by the AEA or the provisions of Title 10 of the Code of Federal Regulations, and although an Agreement

State may not adopt program elements reserved to NRC, it may wish to inform its licensees of certain requirements via a mechanism that is consistent with the particular State's administrative procedure laws, but does not confer regulatory authority on the State.

Voluntary Consensus Standards

The National Technology Transfer Act of 1995 (Public Law 104–113) requires that Federal agencies use technical standards that are developed or adopted by voluntary consensus standards bodies unless the use of such a standard is inconsistent with applicable law or otherwise impractical. In this final rule, the NRC is expanding the applicability of Part 72 to holders of, and applicants for, certificates of compliance, and a voluntary consensus standard is not applicable.

Environmental Impact: Categorical Exclusion

The NRC has determined that this final rule is the type of action described as a categorical exclusion in 10 CFR 51.22(c)(2) and (3). Therefore, neither an environmental impact statement nor an environmental assessment has been prepared for this final rule.

Paperwork Reduction Act Statement

This final rule increases the burden on licensees by expanding the applicability of part 72 to holders of, and applicants for, Certificates of Compliance. The public burden for this information collection is estimated to average 100 hours annually. Because the burden for this information collection is insignificant by comparison with current part 72's overall burden, Office of Management and Budget (OMB) clearance is not required. Existing requirements were approved by the OMB approval number 3150–0132.

Public Protection Notification

If a means used to impose an information collection does not display a currently valid OMB control number, the NRC may not conduct or sponsor, and a person is not required to respond to, the information collection.

Regulatory Analysis

Statement of the Problem

The Commission's regulations at 10 CFR part 72 were designed to provide specific licensing requirements for the storage of spent nuclear fuel in an independent spent fuel storage installation (ISFSI) (45 FR 74693; November 12, 1980). These requirements were later amended to include the storage of high-level waste (HLW) at a monitored retrieval storage (MRS) installation. In 1990, the Commission amended part 72 to include a process for approving the design of spent fuel storage casks by issuance of a certificate of compliance (subpart L) and for granting a general license to reactor licensees (subpart K) to use NRC-approved casks for storage of spent nuclear fuel (55 FR 29181; July 18, 1990). In the past, the Commission experienced performance problems in design, design control, fabrication and quality control with holders of, and applicants for, a CoC under part 72.

When the NRC identifies a failure to comply with part 72 requirements by these persons, the NRC has issued Notices of Nonconformance (NONs). The issuance of an NON does not effectively convey that a violation of a legally binding requirement has occurred. Because the current regulations do not clearly impose requirements on these persons, the NRC has not taken enforcement action, such as a Notice of Violation (NOV), against certificate holders and applicants.

Some part 72 provisions for cask storage of spent fuel (*e.g.*, the quality assurance (QA) requirements) were intended to apply to cask certificate holders and applicants for cask CoCs, as well as to holders of licenses and applicants for a license to store spent nuclear fuel at an ISFSI. However, some of the part 72 requirements intended to apply to certificate holders and applicants do not clearly bring these persons within the scope of the requirement. For this reason, the NRC has not had a clear basis to cite certificate holders and applicants for a CoC for violations of those part 72 requirements.

Additionally, broader requirements for recordkeeping and reporting for certificate holders and applicants for a CoC to include records required to be kept by a condition of the CoC, are needed. Therefore, the NRC is adding § 72.242. This will provide an enforcement basis equivalence to the recordkeeping and reporting regulations for licensees (§ 72.80).

Purpose of the Rulemaking

The purpose of this rulemaking is to expand the applicability of part 72 to holders of, and applicants for, CoCs. This would allow the NRC staff to take enforcement action in the form of NOVs or orders, rather than administrative action in the form of an NON when requirements are violated. While it may appear that an NON and an NOV are similar, the NRC believes that the issuance of an NOV is preferred because: (1) The issuance of an NOV effectively conveys to both the person violating the requirement and the public that a violation of a legally binding requirement has occurred; (2) the use of graduated severity levels associated with an NOV allows the NRC to effectively convey to both the person violating the requirement and the public a clearer perspective on the safety and regulatory significance of the violation; and (3) violation of a regulation reflects the NRC's conclusion that potential risk to public health and safety could exist.

Current Regulatory Framework and Proposed Changes

In promulgating subpart L, the NRC intended that selected part 72 provisions would apply to cask certificate holders and applicants for a CoC. For example, § 72.234(b) requires that, as a condition for approval of a CoC, ''[d]esign, fabrication, testing, and maintenance of spent fuel storage casks be conducted under a QA program that meets the requirements of subpart G of this part.'' However, the QA requirements in subpart G refer only to licensees and applicants for licenses and not to certificate holders. Some of the subpart L regulations apply explicitly only to ''the applicant'' (*e.g.*, § 72.232), or to ''the cask vendor'' (*e.g.*, § 72.234(d)(1)). Some are written in the passive voice so that it is not clear who is responsible for meeting the requirement (*e.g.*, § 72.236). Because of these regulatory deficiencies, certificate holders or applicants for a CoC have not clearly been brought within the scope of part 72 requirements, and the NRC has not had a clear basis to cite these persons for violations of part 72 requirements. Presently, when the NRC has identified a failure to comply with part 72 requirements by these persons, it has issued an administrative action under the NRC's Enforcement Policy.

The NRC Enforcement Policy and implementing program have been established to support the NRC's overall safety mission in protecting public health and safety and the environment. Consistent with this purpose, enforcement actions are intended to be used as a deterrent to: (1) Emphasize the importance of compliance with requirements; and (2) encourage prompt identification and comprehensive correction of the violations. Enforcement sanctions consist of NOVs, civil penalties, and orders of various types. In addition to the formal enforcement actions, the NRC also uses related administrative actions such as NONs, Confirmatory Action Letters, and Demands for Information to supplement the NRC's enforcement program. The NRC expects licensees and holders of, and applicants for, a CoC to adhere to

any obligations and commitments resulting from these actions and will not hesitate to issue appropriate orders to ensure that these obligations and commitments are met. The nature and extent of the enforcement action is intended to reflect the seriousness of the violation involved.

This rule revises the regulations in part 72 to place explicit requirements on certificate holders and applicants for a CoC. Additionally, terms contained in Subpart L, such as cask user, representative of a cask user, cask model, and cask vendor, have been clarified. Changes are made to § 72.10, ''Employee Protection,'' and § 72.11, ''Completeness and Accuracy of Information,'' to include certificate holders and applicants for a CoC. Section 72.3 is revised to: (1) Incorporate definitions for ''certificate holder,'' ''certificate of compliance,'' and ''spent fuel storage cask''; (2) amend the definitions for ''design bases'' and ''structures, systems, and components important to safety'' to include the term ''spent fuel storage cask''; and (3) amend the definition for ''design capacity'' to be consistent with the NRC's policy on the use of metric units. Section 72.236 is revised and reissued as being subject to the criminal penalty provisions of § 223 of the Atomic Energy Act of 1954, and § 72.86(b), ''Criminal Penalties,'' is revised to delete mention of § 72.236 as a conforming change. Section 72.232 is reformatted by adding a new paragraph (b) and renumbering existing paragraphs (b) and (c). The term ''applicant'' is replaced by the term ''certificate holder and applicant for a CoC.'' Requirements to permit inspection of records, premises, and activities related to the design, fabrication, and testing of spent fuel storage casks have been clarified. Lastly, a new § 72.242 is added to subpart L to address additional recordkeeping and reporting requirements for certificate holders and applicants for a CoC, in addition to those already required by § 72.234(d). This new section is similar to the requirements imposed on licensees in § 72.80.

Alternatives

This regulatory analysis considered three alternatives:

Alternative 1: Revise part 72 to expand the applicability of certain provisions to certificate holders, applicants for a CoC, and their contractors and subcontractors.

The NRC believes that problems in the areas of quality assurance, quality control, fabrication control, and design control exist, are significant, and, in part, reflect the fact that certificate holders and applicants, and their contractors and subcontractors, have not been explicitly included in certain part 72 requirements despite the NRC's intent that these persons follow these requirements. Contractors and subcontractors actually accomplish the manufacturing and testing of spent fuel storage casks.

Alternative 1 would allow the NRC to issue NOV's or orders against these persons, as necessary, by allowing the issuance of an NOV when they fail to comply with the requirements of part 72. Presently the NRC issues an NON in these instances.

The NRC has estimated that each certificate holder or applicant for a CoC, on average, has three contractors and subcontractors. Consequently, the NRC estimates that a total of 60 contractors and subcontractors would be affected by changes to part 72 described in Alternative 1. Because certificate holders, applicants for a CoC, and their contractors and subcontractors, for the most part, have already been meeting the requirements of part 72 as either a condition of a CoC or as a condition of a contract between a certificate holder and its contractors and subcontractors, the burdens imposed by this alternative are not significantly increased.

The NRC believes that Alternative 1 would have enabled the NRC to make more effective use of the Enforcement Policy against the certificate holders, and their contractors and subcontractors of spent fuel storage casks. However, holding contractors and subcontractors responsible as contemplated by the proposed rule would dilute the message that the Commission's regulations would otherwise make clear—that licensees and certificate holders are ultimately responsible for assuring quality. Furthermore, the current regulations in § 72.148 make clear that ''[t]o the extent necessary, the licensee shall require contractors or subcontractors to provide a quality assurance program consistent with the applicable provisions of this subpart [Subpart G].''

Alternative 2: Revise part 72 to expand the applicability of certain provisions to certificate holders and applicants for a CoC.

The difference between Alternatives 1 and 2 is that the latter does not include contractors and subcontractors in clarifying the responsibilities for compliance with part 72. Therefore, the NRC would not issue NOVs or orders against these persons under this alternative but would continue to use administrative actions. Several comments were received that were opposed to adding contractors and subcontractors to the regulations. Overall, the commenters felt this action was unnecessary and an excessive burden on small entities. The proposed rule to extend NRC's regulatory requirements under part 72, subpart G, to contractors and subcontractors would be inconsistent with the way in which the NRC regulates quality assurance in other arenas, including reactor parts and equipment. In both instances, there is a potential that deficiencies in the quality assurance program could lead to safety related problems. However, NRC's longstanding regulatory approach has been to make it clear that licensees are responsible for ensuring that the parts and equipment are safe.

Therefore, the NRC has reconsidered and concluded that contractors and subcontractors should not be included in these regulations. Consequently, Alternative 2 is adopted.

Alternative 3: No action.

This alternative was rejected, even though staff resources for rulemaking would have been conserved. Under this alternative, it is expected that the difficulties the NRC has observed in the past will continue.

Decision Rationale for Preferred Alternative

Alternative 2 is the preferred choice. The major benefit of this alternative is to allow the NRC to issue NOVs or Orders against certificate holders and applicants for a CoC under the current NRC Enforcement Policy, without imposing an unnecessary burden on contractors and subcontractors; and ensures that quality assurance requirements imposed on contractors and subcontractors are consistent for both reactor and material activities. This would enable both the person violating the regulation and the public to clearly perceive the regulatory and safety significance and consequences of the violation.

Because certificate holders and applicants for a CoC, for the most part, already have been meeting the requirements of part 72 as a condition of a CoC, the burdens imposed by this amendment are not significantly increased. Additional requirements for recordkeeping and reporting for certificate holders are needed, to include records required to be kept by a condition of the CoC. This will provide an enforcement basis equivalence to the recordkeeping and reporting regulations for licensees (§ 72.80). Therefore, the NRC is adding § 72.242. The new § 72.242 will add

new burdens for recordkeeping and reporting requirements. The staff estimates this burden associated with the new § 72.242 to be approximately 100 hours annually. This recordkeeping and reporting burden will vary by certificate holders. The NRC believes that the purpose of the final rule justifies this burden on certificate holders. This burden is insignificant by comparison with part 72's overall burden which is in excess of 21,000 hours. In addition, the current backfit regulation in § 72.62 applies only to part 72 licensees and not to holders of, and applicants for, a CoC. This rule adds recordkeeping and reporting requirements for holders of, and applicants for, CoCs. Therefore, a backfit analysis is not required for this rule.

Regulatory Flexibility Certification

In accordance with the Regulatory Flexibility Act of 1980, 5 U.S.C. 605(b), the Commission certifies that this final rule will not have a significant economic impact on a substantial number of small entities. The final rule amends the regulations to expand the applicability of 10 CFR part 72 to holders of, and applicants for, CoCs. This requirement will enhance the Commission's ability to take enforcement action by issuing NOVs or orders rather than administrative action in the form of NONs when legally binding requirements are violated. The final rule may appear to impose new requirements on some small entities on the assumption that could be a certificate holder or applicant able to qualify as a ''small entity''. However, these entities, for the most part, are already implementing the actions required by the final rule. Therefore, the NRC believes that this amendment will not have a significant economic impact on any such small entity.

Small Business Regulatory Enforcement Fairness Act

In accordance with the Small Business Regulatory Enforcement Fairness Act of 1996, the NRC has determined that this action is not ''a major'' rule and has verified this determination with the Office of Information and Regulatory Affairs, Office of Management and Budget.

Backfit Analysis

The current backfit regulation in § 72.62 applies only to part 72 licensees and not to holders of, and applicants for, a CoC. This rule, in any event, adds only reporting and recordkeeping requirements for holders of, and applicants for, CoCs. The Commission has determined that reporting and recordkeeping requirements are not considered backfits even though they may result in changes to procedures. If the reporting or recordkeeping requirements had to meet the standards for a backfit analysis, the Commission would have to find that the information would substantially increase public health or safety or common defense and security without knowing the results of the request. In addition, the existence or non-existence of a record or report usually has no independent safety significance as compared to actions taken by the licensee, certificate holder, or NRC as a result of the information contained in the record or report. It is this resulting action that affects public health and safety or the common defense or security that should be measured under the backfit standard and not the method for obtaining or maintaining the information.

However, the NRC has prepared a regulatory analysis which sets forth the objectives of the rulemaking changes, the alternatives that were considered, and the expected costs and benefits associated with the rulemaking changes. The NRC regards this analysis as providing for a disciplined approach for evaluating the impacts of the proposed changes, which satisfies the underlying purposes of the backfitting requirements in § 72.62.

List of Subjects in 10 CFR Part 72

Criminal penalties, Manpower training programs, Nuclear materials, Occupational safety and health, Reporting and recordkeeping requirements, Security measures, Spent fuel.

For the reasons set out in the preamble and under the authority of the Atomic Energy Act of 1954, as amended; the Energy Reorganization Act of 1974, as amended; and 5 U.S.C. 552 and 553, the NRC is adopting the following amendments to 10 CFR part 72.

PART 72—LICENSING REQUIREMENTS FOR THE INDEPENDENT STORAGE OF SPENT NUCLEAR FUEL AND HIGH-LEVEL RADIOACTIVE WASTE

1. The authority citation for part 72 is revised to read as follows:

Authority: Secs. 51, 53, 57, 62, 63, 65, 69, 81, 161, 182, 183, 184, 186, 187, 189, 68 Stat. 929, 930, 932, 933, 934, 935, 948, 953, 954, 955, as amended; sec. 234, 83 Stat. 444, as amended (42 U.S.C. 2071, 2073, 2077, 2092, 2093, 2095, 2099, 2111, 2201, 2232, 2233, 2234, 2236, 2237, 2238, 2282); sec. 274, Pub. L. 86–373, 73 Stat. 688, as amended (42 U.S.C. 2021); sec. 201, as amended; 202, 206, 88 Stat. 1242, as amended; 1244, 1246 (42 U.S.C. 5841, 5842, 5846); Pub. L. 95–601, sec. 10, 92 Stat. 2951 as amended by Pub. L. 102–486, sec. 7902, 106 Stat. 3123 (42 U.S.C. 5851); sec. 102, Pub. L. 91–190, 83 Stat. 853 (42 U.S.C. 4332); secs. 131, 132, 133, 135, 137, 141, Pub. L. 97–425, 96 Stat. 2229, 2230, 2232, 2241; sec. 148, Pub. L. 100–203, 101 Stat. 1330–235 (42 U.S.C. 10151, 10152, 10153, 10155, 10157, 10161, 10168).

Section 72.44(g) also issued under secs. 142(b) and 148(c), (d), Pub. L. 100–203, 101 Stat. 1330–232, 1330–236 (42 U.S.C. 10162(b), 10168(c), (d)). Section 72.46 also issued under sec. 189, 68 Stat. 955 (42 U.S.C. 2239); sec. 134, Pub. L. 97–425, 96 Stat. 2230 (42 U.S.C. 10154). Section 72.96(d) also issued under sec. 145(g), Pub. L. 100–203, 101 Stat. 1330–235 (42 U.S.C. 10165(g)). Subpart J also issued under secs. 2(2), 2(15), 2(19), 117(a), 141(h), Pub. L. 97–425, 96 Stat. 2202, 2203, 2204, 2222, 2224 (42 U.S.C. 10101, 10137(a), 10161(h)). Subparts K and L are also issued under sec. 133, 98 Stat. 2230 (42 U.S.C. 10153) and sec. 218(a), 96 Stat. 2252 (42 U.S.C. 10198).

2. In § 72.2, paragraph (b) is revised to read as follows:

§ 72.2 Scope.

* * * * *

(b) The regulations in this part pertaining to an independent spent fuel storage installation (ISFSI) and a spent fuel storage cask apply to all persons in the United States, including persons in Agreement States. The regulations in this part pertaining to a monitored retrievable storage installation (MRS) apply only to DOE.

* * * * *

3. In § 72.3, the definitions of *Certificate holder, Certificate of Compliance or CoC,* and *Spent fuel storage cask or cask* are added in alphabetical order, and the definitions of *Design bases, Design capacity, and Structures, systems, and components important to safety* are revised to read as follows:

§ 72.3 Definitions.

* * * * *

Certificate holder means a person who has been issued a Certificate of Compliance by the Commission for a spent fuel storage cask design.

Certificate of Compliance or *CoC* means the certificate issued by the Commission that approves the design of a spent fuel storage cask in accordance with the provisions of subpart L of this part.

* * * * * * *

Design bases means that information that identifies the specific functions to be performed by a structure, system, or component of a facility or of a spent fuel storage cask and the specific values or

ranges of values chosen for controlling parameters as reference bounds for design. These values may be restraints derived from generally accepted state-of-the-art practices for achieving functional goals or requirements derived from analysis (based on calculation or experiments) of the effects of a postulated event under which a structure, system, or component must meet its functional goals. The values for controlling parameters for external events include—

(1) Estimates of severe natural events to be used for deriving design bases that will be based on consideration of historical data on the associated parameters, physical data, or analysis of upper limits of the physical processes involved; and

(2) Estimates of severe external man-induced events to be used for deriving design bases that will be based on analysis of human activity in the region, taking into account the site characteristics and the risks associated with the event.

Design capacity means the quantity of spent fuel or high-level radioactive waste, the maximum burn up of the spent fuel in MWD/MTU, the terabequerel (curie) content of the waste, and the total heat generation in Watts (btu/hour) that the storage installation is designed to accommodate.

* * * * * * *

Spent fuel storage cask or *cask* means all the components and systems associated with the container in which spent fuel or other radioactive materials associated with spent fuel are stored in an ISFSI.

* * * * * * *

Structures, systems, and components important to safety means those features of the ISFSI, MRS, and spent fuel storage cask whose functions are—

(1) To maintain the conditions required to store spent fuel or high-level radioactive waste safely;

(2) To prevent damage to the spent fuel or the high-level radioactive waste container during handling and storage; or

(3) To provide reasonable assurance that spent fuel or high-level radioactive waste can be received, handled, packaged, stored, and retrieved without undue risk to the health and safety of the public.

4. Section 72.9 is revised to read as follows:

§ 72.9 Information collection requirements: OMB approval.

(a) The Nuclear Regulatory Commission has submitted the information collection requirements contained in this part to the Office of Management and Budget (OMB) for approval as required by the Paperwork Reduction Act of 1995 (44 U.S.C. 3501 *et seq.*). OMB has approved the information collection requirements contained in this part under control number 3150–0132.

(b) The approved information collection requirements contained in this part appear in §§ 72.7, 72.11, 72.16, 72.19, 72.22 through 72.34, 72.42, 72.44, 72.48 through 72.56, 72.62, 72.70 through 72.82, 72.90, 72.92, 72.94, 72.98, 72.100, 72.102, 72.104, 72.108, 72.120, 72.126, 72.140 through 72.176, 72.180 through 72.186, 72.192, 72.206, 72.212, 72.216, 72.218, 72.230, 72.232, 72.234, 72.236, 72.240, 72.242, 72.244, and 72.248.

5. In § 72.10, the introductory text of paragraph (a), the introductory text of paragraph (c), and paragraphs (c)(1) and (e)(1) are revised to read as follows:

§ 72.10 Employee protection.

(a) Discrimination by a Commission licensee, certificate holder, an applicant for a Commission license or a CoC, or a contractor or subcontractor of any of these, against an employee for engaging in certain protected activities, is prohibited. Discrimination includes discharge and other actions that relate to compensation, terms, conditions, or privileges of employment. The protected activities are established in section 211 of the Energy Reorganization Act of 1974, as amended, and in general are related to the administration or enforcement of a requirement imposed under the Atomic Energy Act or the Energy Reorganization Act.

* * * * * * *

(c) A violation of paragraph (a), (e), or (f) of this section by a Commission licensee, certificate holder, applicant for a Commission license or a CoC, or a contractor or subcontractor of any of these may be grounds for:

(1) Denial, revocation, or suspension of the license or the CoC.

* * * * *

(e)(1) Each licensee, certificate holder, and applicant for a license or CoC must prominently post the revision of NRC Form 3, ''Notice to Employees,'' referenced in 10 CFR 19.11(c). This form must be posted at locations sufficient to permit employees protected by this section to observe a copy on the way to or from their place of work. The premises must be posted not later than 30 days after an application is docketed and remain posted while the application is pending before the Commission, during the term of the license or CoC, and for 30 days following license or CoC termination.

* * * * *

6. Section 72.11 is revised to read as follows:

§ 72.11 Completeness and accuracy of information.

(a) Information provided to the Commission by a licensee, certificate holder, or an applicant for a license or CoC; or information required by statute or by the Commission's regulations, orders, license or CoC conditions, to be maintained by the licensee or certificate holder, must be complete and accurate in all material respects.

(b) Each licensee, certificate holder, or applicant for a license or CoC must notify the Commission of information identified by the licensee, certificate holder, or applicant for a license or CoC as having, for the regulated activity, a significant implication for public health and safety or common defense and security. A licensee, certificate holder, or an applicant for a license or CoC violates this paragraph only if the licensee, certificate holder, or applicant for a license or CoC fails to notify the Commission of information that the licensee, certificate holder, or applicant for a license or CoC has identified as having a significant implication for public health and safety or common defense and security. Notification must be provided to the Administrator of the appropriate Regional Office within two working days of identifying the information. This requirement is not applicable to information which is already required to be provided to the Commission by other reporting or updating requirements.

7. In § 72.86, paragraph (b) is revised to read as follows:

§ 72.86 Criminal penalties.

* * * * *

(b) The regulations in this part 72 that are not issued under sections 161b, 161i, or 161o for the purposes of section 223 are as follows: §§ 72.1, 72.2, 72.3, 72.4, 72.5, 72.7, 72.8, 72.9, 72.16, 72.18, 72.20, 72.22, 72.24, 72.26, 72.28, 72.32, 72.34, 72.40, 72.46, 72.56, 72.58, 72.60, 72.62, 72.84, 72.86, 72.90, 72.96, 72.108, 72.120, 72.122, 72.124, 72.126, 72.128, 72.130, 72.182, 72.194, 72.200, 72.202, 72.204, 72.206, 72.210, 72.214, 72.220, 72.230, 72.238, 72.240, 72.244, and 72.246.

8. Subpart G is revised to read as follows:

Subpart G—Quality Assurance

Sec.

72.140 Quality assurance requirements.
72.142 Quality assurance organization.
72.144 Quality assurance program.

72.146 Design control.
72.148 Procurement document control.
72.150 Instructions, procedures, and drawings.
72.152 Document control.
72.154 Control of purchased material, equipment, and services.
72.156 Identification and control of materials, parts, and components.
72.158 Control of special processes.
72.160 Licensee and certificate holder inspection.
72.162 Test control.
72.164 Control of measuring and test equipment.
72.166 Handling, storage, and shipping control.
72.168 Inspection, test, and operating status.
72.170 Nonconforming materials, parts, or components.
72.172 Corrective action.
72.174 Quality assurance records.
72.176 Audits.

Subpart G—Quality Assurance

§ 72.140 Quality assurance requirements.

(a) *Purpose.* This subpart describes quality assurance requirements that apply to design, purchase, fabrication, handling, shipping, storing, cleaning, assembly, inspection, testing, operation, maintenance, repair, modification of structures, systems, and components, and decommissioning that are important to safety. As used in this subpart, ''quality assurance'' comprises all those planned and systematic actions necessary to provide adequate confidence that a structure, system, or component will perform satisfactorily in service. Quality assurance includes quality control, which comprises those quality assurance actions related to control of the physical characteristics and quality of the material or component to predetermined requirements. The certificate holder and applicant for a CoC are responsible for the quality assurance requirements as they apply to the design, fabrication, and testing of a spent fuel storage cask until possession of the spent fuel storage cask is transferred to the licensee. The licensee and the certificate holder are also simultaneously responsible for these quality assurance requirements through the oversight of contractors and subcontractors.

(b) *Establishment of program.* Each licensee, applicant for a license, certificate holder, applicant for a CoC shall establish, maintain, and execute a quality assurance program satisfying each of the applicable criteria of this subpart, and satisfying any specific provisions which are applicable to the licensee's, applicant's for a license, certificate holder's, and applicant's for a CoC activities. The licensee, applicant for a license, certificate holder, and applicant for a CoC shall execute the applicable criteria in a graded approach to an extent that is commensurate with the quality assurance requirements' importance to safety. The quality assurance program must cover the activities identified in this subpart throughout the life of the activity. For licensees, this includes activities from the site selection through decommissioning prior to termination of the license. For certificate holders, this includes activities from development of the spent fuel storage cask design through termination of the CoC.

(c) *Approval of program.* (1) Each licensee, applicant for a license, certificate holder, and applicant for a CoC shall file a description, in accordance with § 72.4, of its quality assurance program that includes a discussion of which requirements of this subpart are applicable and the methodology used to satisfy these requirements.

(2) Each licensee shall obtain Commission approval of its quality assurance program prior to receipt of spent fuel at the ISFSI or spent fuel and high-level radioactive waste at the MRS.

(3) Each certificate holder shall obtain Commission approval of its quality assurance program prior to commencing fabrication or testing of a spent fuel storage cask.

(d) *Previously approved programs.* A quality assurance program previously approved by the Commission and which is established, maintained, and executed with regard to an ISFSI or spent fuel storage cask will be accepted as satisfying the requirements of paragraph (b) of this section. Previously approved quality assurance programs that satisfy the requirements of Appendix B to part 50 of this chapter, subpart H of part 71 of this chapter, or subpart G of this part are considered acceptable, except each licensee, applicant for a license, certificate holder, and applicant for a CoC who are using an Appendix B or subpart H quality assurance program shall also meet the recordkeeping requirements of § 72.174. Prior to initial use of a previously approved program, each licensee, applicant for a license, certificate holder, and applicant for a CoC shall notify the NRC, in accordance with § 72.4, of its intent to apply its previously approved quality assurance program to ISFSI or spent fuel storage cask activities. The notification must identify the quality assurance program by date of submittal to the Commission, docket number, and date of Commission approval.

§ 72.142 Quality assurance organization.

(a) The licensee, applicant for a license, certificate holder, and applicant for a CoC shall be responsible for the establishment and execution of the quality assurance program. The licensee and certificate holder may delegate to others, such as contractors, agents, or consultants, the work of establishing and executing the quality assurance program, but the licensee and the certificate holder shall retain responsibility for the program. The licensee, applicant for a license, certificate holder, and applicant for a CoC shall clearly establish and delineate in writing the authority and duties of persons and organizations performing activities affecting the functions of structures, systems, and components which are important to safety. These activities include performing the functions associated with attaining quality objectives and the quality assurance functions.

(b) The quality assurance functions are—

(1) Assuring that an appropriate quality assurance program is established and effectively executed; and

(2) Verifying, by procedures such as checking, auditing, and inspection, that activities affecting the functions that are important to safety have been correctly performed. The persons and organizations performing quality assurance functions shall have sufficient authority and organizational freedom to identify quality problems; to initiate, recommend, or provide solutions; and to verify implementation of solutions.

(c) The persons and organizations performing quality assurance functions shall report to a management level that ensures that the required authority and organizational freedom, including sufficient independence from cost and schedule considerations when these considerations are opposed to safety considerations, are provided. Because of the many variables involved, such as the number of personnel, the type of activity being performed, and the location or locations where activities are performed, the organizational structure for executing the quality assurance program may take various forms, provided that the persons and organizations assigned the quality assurance functions have the required authority and organizational freedom. Irrespective of the organizational structure, the individual(s) assigned the responsibility for assuring effective execution of any portion of the quality assurance program, at any location where activities subject to this section are being performed, must have direct

access to the levels of management necessary to perform this function.

§ 72.144 Quality assurance program.

(a) The licensee, applicant for a license, certificate holder, and applicant for a CoC shall establish, at the earliest practicable time consistent with the schedule for accomplishing the activities, a quality assurance program which complies with the requirements of this subpart. The licensee, applicant for a license, certificate holder, and applicant for a CoC shall document the quality assurance program by written procedures or instructions and shall carry out the program in accordance with these procedures throughout the period during which the ISFSI or MRS is licensed or the spent fuel storage cask is certified. The licensee, applicant for a license, certificate holder, and applicant for a CoC shall identify the structures, systems, and components to be covered by the quality assurance program, the major organizations participating in the program, and the designated functions of these organizations.

(b) The licensee, applicant for a license, certificate holder, and applicant for a CoC, through their quality assurance program(s), shall provide control over activities affecting the quality of the identified structures, systems, and components to an extent commensurate with the importance to safety and, as necessary, to ensure conformance with the approved design of each ISFSI, MRS, or spent fuel storage cask. The licensee, applicant for a license, certificate holder, and applicant for a CoC shall ensure that activities affecting quality are accomplished under suitably controlled conditions. Controlled conditions include the use of appropriate equipment; suitable environmental conditions for accomplishing the activity, such as adequate cleanliness; and assurance that all prerequisites for the given activity have been satisfied. The licensee, applicant for a license, certificate holder, and applicant for a CoC shall take into account the need for special controls, processes, test equipment, tools and skills to attain the required quality and the need for verification of quality by inspection and test.

(c) The licensee, applicant for a license, certificate holder, and applicant for a CoC shall base the requirements and procedures of their quality assurance program(s) on the following considerations concerning the complexity and proposed use of the structures, systems, or components:

(1) The impact of malfunction or failure of the item on safety;

(2) The design and fabrication complexity or uniqueness of the item;

(3) The need for special controls and surveillance over processes and equipment;

(4) The degree to which functional compliance can be demonstrated by inspection or test; and

(5) The quality history and degree of standardization of the item.

(d) The licensee, applicant for a license, certificate holder, and applicant for a CoC shall provide for indoctrination and training of personnel performing activities affecting quality as necessary to ensure that suitable proficiency is achieved and maintained.

(e) The licensee, applicant for a license, certificate holder, and applicant for a CoC shall review the status and adequacy of the quality assurance program at established intervals. Management of other organizations participating in the quality assurance program must regularly review the status and adequacy of that part of the quality assurance program which they are executing.

§ 72.146 Design control.

(a) The licensee, applicant for a license, certificate holder, and applicant for a CoC shall establish measures to ensure that applicable regulatory requirements and the design basis, as specified in the license or CoC application for those structures, systems, and components to which this section applies, are correctly translated into specifications, drawings, procedures, and instructions. These measures must include provisions to ensure that appropriate quality standards are specified and included in design documents and that deviations from standards are controlled. Measures must be established for the selection and review for suitability of application of materials, parts, equipment, and processes that are essential to the functions of the structures, systems, and components which are important to safety.

(b) The licensee, applicant for a license, certificate holder, and applicant for a CoC shall establish measures for the identification and control of design interfaces and for coordination among participating design organizations. These measures must include the establishment of written procedures among participating design organizations for the review, approval, release, distribution, and revision of documents involving design interfaces. The design control measures must provide for verifying or checking the adequacy of design by methods such as design reviews, alternate or simplified calculational methods, or by a suitable testing program. For the verifying or checking process, the licensee and certificate holder shall designate individuals or groups other than those who were responsible for the original design, but who may be from the same organization. Where a test program is used to verify the adequacy of a specific design feature in lieu of other verifying or checking processes, the licensee and certificate holder shall include suitable qualification testing of a prototype or sample unit under the most adverse design conditions. The licensee, applicant for a license, certificate holder, and applicant for a CoC shall apply design control measures to items such as the following: criticality physics, radiation, shielding, stress, thermal, hydraulic, and accident analyses; compatibility of materials; accessibility for inservice inspection, maintenance, and repair; features to facilitate decontamination; and delineation of acceptance criteria for inspections and tests.

(c) The licensee, applicant for a license, certificate holder, and applicant for a CoC shall subject design changes, including field changes, to design control measures commensurate with those applied to the original design. Changes in the conditions specified in the license or CoC require prior NRC approval.

§ 72.148 Procurement document control.

The licensee, applicant for a license, certificate holder, and applicant for a CoC shall establish measures to assure that applicable regulatory requirements, design bases, and other requirements which are necessary to assure adequate quality are included or referenced in the documents for procurement of material, equipment, and services, whether purchased by the licensee, certificate holder, or by their contractors and subcontractors. To the extent necessary, the licensee, applicant for a license, certificate holder, and applicant for a CoC, shall require contractors or subcontractors to provide a quality assurance program consistent with the applicable provisions of this subpart.

§ 72.150 Instructions, procedures, and drawings.

The licensee, applicant for a license, certificate holder, and applicant for a CoC shall prescribe activities affecting quality by documented instructions, procedures, or drawings of a type appropriate to the circumstances and shall require that these instructions, procedures, and drawings be followed. The instructions, procedures, and drawings must include appropriate

quantitative or qualitative acceptance criteria for determining that important activities have been satisfactorily accomplished.

§ 72.152 Document control.

The licensee, applicant for a license, certificate holder, and applicant for a CoC shall establish measures to control the issuance of documents such as instructions, procedures, and drawings, including changes, which prescribe all activities affecting quality. These measures must assure that documents, including changes, are reviewed for adequacy, approved for release by authorized personnel, and distributed and used at the location where the prescribed activity is performed. These measures must ensure that changes to documents are reviewed and approved.

§ 72.154 Control of purchased material, equipment, and services.

(a) The licensee, applicant for a license, certificate holder, and applicant for a CoC shall establish measures to ensure that purchased material, equipment, and services, whether purchased directly or through contractors and subcontractors, conform to the procurement documents. These measures must include provisions, as appropriate, for source evaluation and selection, objective evidence of quality furnished by the contractor or subcontractor, inspection at the contractor or subcontractor source, and examination of products upon delivery.

(b) The licensee, applicant for a license, certificate holder, and applicant for a CoC shall have available documentary evidence that material and equipment conform to the procurement specifications prior to installation or use of the material and equipment. The licensee and certificate holder shall retain or have available this documentary evidence for the life of the ISFSI, MRS, or spent fuel storage cask. The licensee and certificate holder shall ensure that the evidence is sufficient to identify the specific requirements met by the purchased material and equipment.

(c) The licensee, applicant for a license, certificate holder, and applicant for a CoC, or a designee of either, shall assess the effectiveness of the control of quality by contractors and subcontractors at intervals consistent with the importance, complexity, and quantity of the product or services.

§ 72.156 Identification and control of materials, parts, and components.

The licensee, applicant for a license, certificate holder, and applicant for a CoC shall establish measures for the identification and control of materials, parts, and components. These measures must ensure that identification of the item is maintained by heat number, part number, serial number, or other appropriate means, either on the item or on records traceable to the item as required, throughout fabrication, installation, and use of the item. These identification and control measures must be designed to prevent the use of incorrect or defective materials, parts, and components.

§ 72.158 Control of special processes.

The licensee, applicant for a license, certificate holder, and applicant for a CoC shall establish measures to ensure that special processes, including welding, heat treating, and nondestructive testing, are controlled and accomplished by qualified personnel using qualified procedures in accordance with applicable codes, standards, specifications, criteria, and other special requirements.

§ 72.160 Licensee and certificate holder inspection.

The licensee, applicant for a license, certificate holder, and applicant for a CoC shall establish and execute a program for inspection of activities affecting quality by or for the organization performing the activity to verify conformance with the documented instructions, procedures, and drawings for accomplishing the activity. The inspection must be performed by individuals other than those who performed the activity being inspected. Examinations, measurements, or tests of material or products processed must be performed for each work operation where necessary to assure quality. If direct inspection of processed material or products cannot be carried out, indirect control by monitoring processing methods, equipment, and personnel must be provided. Both inspection and process monitoring must be provided when quality control is inadequate without both. If mandatory inspection hold points that require witnessing or inspecting by the licensee's or certificate holder's designated representative, and beyond which work should not proceed without the consent of its designated representative, are required, the specific hold points must be indicated in appropriate documents.

§ 72.162 Test control.

The licensee, applicant for a license, certificate holder, and applicant for a CoC shall establish a test program to ensure that all testing, required to demonstrate that the structures, systems, and components will perform satisfactorily in service, is identified and performed in accordance with written test procedures that incorporate the requirements of this part and the requirements and acceptance limits contained in the ISFSI, MRS, or spent fuel storage cask license or CoC. The test procedures must include provisions to ensure that all prerequisites for the given test are met, that adequate test instrumentation is available and used, and that the test is performed under suitable environmental conditions. The licensee, applicant for a license, certificate holder, and applicant for a CoC shall document and evaluate the test results to ensure that test requirements have been satisfied.

§ 72.164 Control of measuring and test equipment.

The licensee, applicant for a license, certificate holder, and applicant for a CoC shall establish measures to ensure that tools, gauges, instruments, and other measuring and testing devices used in activities affecting quality are properly controlled, calibrated, and adjusted at specified periods to maintain accuracy within necessary limits.

§ 72.166 Handling, storage, and shipping control.

The licensee, applicant for a license, certificate holder, and applicant for a CoC shall establish measures to control, in accordance with work and inspection instructions, the handling, storage, shipping, cleaning, and preservation of materials and equipment to prevent damage or deterioration. When necessary for particular products, special protective environments, such as inert gas atmosphere, and specific moisture content and temperature levels must be specified and provided.

§ 72.168 Inspection, test, and operating status.

(a) The licensee, applicant for a license, certificate holder, and applicant for a CoC shall establish measures to indicate, by the use of markings such as stamps, tags, labels, routing cards, or other suitable means, the status of inspections and tests performed upon individual items of the ISFSI, MRS, or spent fuel storage cask. These measures must provide for the identification of items which have satisfactorily passed required inspections and tests where necessary to preclude inadvertent bypassing of the inspections and tests.

(b) The licensee shall establish measures to identify the operating status of structures, systems, and components of the ISFSI or MRS, such as tagging

valves and switches, to prevent inadvertent operation.

§ 72.170 Nonconforming materials, parts, or components.

The licensee, applicant for a license, certificate holder, and applicant for a CoC shall establish measures to control materials, parts, or components that do not conform to their requirements in order to prevent their inadvertent use or installation. These measures must include, as appropriate, procedures for identification, documentation, segregation, disposition, and notification to affected organizations. Nonconforming items must be reviewed and accepted, rejected, repaired, or reworked in accordance with documented procedures.

§ 72.172 Corrective action.

The licensee, applicant for a license, certificate holder, and applicant for a CoC shall establish measures to ensure that conditions adverse to quality, such as failures, malfunctions, deficiencies, deviations, defective material and equipment, and nonconformances, are promptly identified and corrected. In the case of a significant condition identified as adverse to quality, the measures must ensure that the cause of the condition is determined and corrective action is taken to preclude repetition. The identification of the significant condition adverse to quality, the cause of the condition, and the corrective action taken must be documented and reported to appropriate levels of management.

§ 72.174 Quality assurance records.

The licensee, applicant for a license, certificate holder, and applicant for a CoC shall maintain sufficient records to furnish evidence of activities affecting quality. The records must include the following: design records, records of use, and the results of reviews, inspections, tests, audits, monitoring of work performance, and materials analyses. The records must include closely related data such as qualifications of personnel, procedures, and equipment. Inspection and test records must, at a minimum, identify the inspector or data recorder, the type of observation, the results, the acceptability, and the action taken in connection with any noted deficiencies. Records must be identifiable and retrievable. Records pertaining to the design, fabrication, erection, testing, maintenance, and use of structures, systems, and components important to safety must be maintained by or under the control of the licensee or certificate holder until the NRC terminates the license or CoC.

§ 72.176 Audits.

The licensee, applicant for a license, certificate holder, and applicant for a CoC shall carry out a comprehensive system of planned and periodic audits to verify compliance with all aspects of the quality assurance program and to determine the effectiveness of the program. The audits must be performed in accordance with written procedures or checklists by appropriately trained personnel not having direct responsibilities in the areas being audited. Audited results must be documented and reviewed by management having responsibility in the area audited. Follow-up action, including reaudit of deficient areas, must be taken where indicated.

9. Section 72.232 is revised to read as follows:

§ 72.232 Inspection and tests.

(a) The certificate holder and applicant for a CoC shall permit, and make provisions for, the NRC to inspect the premises and facilities where a spent fuel storage cask is designed, fabricated, and tested.

(b) The certificate holder and applicant for a CoC shall make available to the NRC for inspection, upon reasonable notice, records kept by them pertaining to the design, fabrication, and testing of spent fuel storage casks.

(c) The certificate holder and applicant for a CoC shall perform, and make provisions that permit the NRC to perform, tests that the Commission deems necessary or appropriate for the administration of the regulations in this part.

(d) The certificate holder and applicant for a CoC shall submit a notification under § 72.4 at least 45 days prior to starting fabrication of the first spent fuel storage cask under a Certificate of Compliance.

10. Section 72.234 is revised to read as follows:

§ 72.234 Conditions of approval.

(a) The certificate holder and applicant for a CoC shall ensure that the design, fabrication, testing, and maintenance of a spent fuel storage cask comply with the requirements in § 72.236.

(b) The certificate holder and applicant for a CoC shall ensure that the design, fabrication, testing, and maintenance of spent fuel storage casks are conducted under a quality assurance program that meets the requirements of subpart G of this part.

(c) The certificate holder and applicant for a CoC shall ensure that the fabrication of spent fuel storage casks under a CoC does not begin prior to receipt of the CoC for the spent fuel storage cask.

(d)(1) The certificate holder shall ensure that a record is established and maintained for each spent fuel storage cask fabricated under the CoC.

(2) This record must include:

(i) The NRC CoC number;

(ii) The spent fuel storage cask model number;

(iii) The spent fuel storage cask identification number;

(iv) Date fabrication was started;

(v) Date fabrication was completed;

(vi) Certification that the spent fuel storage cask was designed, fabricated, tested, and repaired in accordance with a quality assurance program accepted by NRC;

(vii) Certification that inspections required by § 72.236(j) were performed and found satisfactory; and

(viii) The name and address of the licensee using the spent fuel storage cask.

(3) The certificate holder shall supply the original of this record to the licensees using the spent fuel storage cask. A current copy of a composite record of all spent fuel storage casks manufactured under a CoC, showing the information in paragraph (d)(2) of this section, must be initiated and maintained by the certificate holder for each model spent fuel storage cask. If the certificate holder permanently ceases production of spent fuel storage casks under a CoC, the certificate holder shall send this composite record to the Commission using instructions in § 72.4.

(e) The certificate holder and the licensees using the spent fuel storage cask shall ensure that the composite record required by paragraph (d) of this section is available to the Commission for inspection.

(f) The certificate holder shall ensure that written procedures and appropriate tests are established prior to use of the spent fuel storage casks. A copy of these procedures and tests must be provided to each licensee using the spent fuel storage cask.

11. Section 72.236 is revised to read as follows:

§ 72.236 Specific requirements for spent fuel storage cask approval and fabrication.

The certificate holder shall ensure that the requirements of this section are met. An applicant for a CoC shall ensure that the requirements of this section are met, except for paragraphs (j) and (k) of this section.

(a) Specifications must be provided for the spent fuel to be stored in the

spent fuel storage cask, such as, but not limited to, type of spent fuel (*i.e.*, BWR, PWR, both), maximum allowable enrichment of the fuel prior to any irradiation, burn-up (*i.e.*, megawatt-days/MTU), minimum acceptable cooling time of the spent fuel prior to storage in the spent fuel storage cask, maximum heat designed to be dissipated, maximum spent fuel loading limit, condition of the spent fuel (*i.e.*, intact assembly or consolidated fuel rods), the inerting atmosphere requirements.

(b) Design bases and design criteria must be provided for structures, systems, and components important to safety.

(c) The spent fuel storage cask must be designed and fabricated so that the spent fuel is maintained in a subcritical condition under credible conditions.

(d) Radiation shielding and confinement features must be provided sufficient to meet the requirements in §§ 72.104 and 72.106.

(e) The spent fuel storage cask must be designed to provide redundant sealing of confinement systems.

(f) The spent fuel storage cask must be designed to provide adequate heat removal capacity without active cooling systems.

(g) The spent fuel storage cask must be designed to store the spent fuel safely for a minimum of 20 years and permit maintenance as required.

(h) The spent fuel storage cask must be compatible with wet or dry spent fuel loading and unloading facilities.

(i) The spent fuel storage cask must be designed to facilitate decontamination to the extent practicable.

(j) The spent fuel storage cask must be inspected to ascertain that there are no cracks, pinholes, uncontrolled voids, or other defects that could significantly reduce its confinement effectiveness.

(k) The spent fuel storage cask must be conspicuously and durably marked with—

(1) A model number;

(2) A unique identification number; and

(3) An empty weight.

(l) The spent fuel storage cask and its systems important to safety must be evaluated, by appropriate tests or by other means acceptable to the NRC, to demonstrate that they will reasonably maintain confinement of radioactive material under normal, off-normal, and credible accident conditions.

(m) To the extent practicable in the design of spent fuel storage casks, consideration should be given to compatibility with removal of the stored spent fuel from a reactor site, transportation, and ultimate disposition by the Department of Energy.

12. Section 72.240 is revised to read as follows:

§ 72.240 Conditions for spent fuel storage cask reapproval.

(a) The certificate holder, a licensee using a spent fuel storage cask, or the representative of a licensee using a spent fuel storage cask shall apply for reapproval of the design of a spent fuel storage cask.

(b) The application for reapproval of the design of a spent fuel storage cask must be submitted not less than 30 days prior to the expiration date of the CoC. When the applicant has submitted a timely application for reapproval, the existing CoC will not expire until the application for reapproval has been determined by the NRC. The application must be accompanied by a safety analysis report (SAR). The new SAR may reference the SAR originally submitted for the approved spent fuel storage cask design.

(c) The design of a spent fuel storage cask will be reapproved if the conditions in § 72.238 are met, and the application includes a demonstration that the storage of spent fuel has not significantly adversely affected structures, systems, and components important to safety.

13. Section 72.242 is added to read as follows:

§ 72.242 Recordkeeping and reports.

(a) Each certificate holder or applicant shall maintain any records and produce any reports that may be required by the conditions of the CoC or by the rules, regulations, and orders of the NRC in effectuating the purposes of the Act.

(b) Records that are required by the regulations in this part or by conditions of the CoC must be maintained for the period specified by the appropriate regulation or the CoC conditions. If a retention period is not specified, the records must be maintained until the NRC terminates the CoC.

(c) Any record maintained under this part may be either the original or a reproduced copy by any state-of-the-art method provided that any reproduced copy is duly authenticated by authorized personnel and is capable of producing a clear and legible copy after storage for the period specified by NRC regulations.

(d) Each certificate holder shall submit a written report to the NRC within 30 days of discovery of a design or fabrication deficiency, for any spent fuel storage cask which has been delivered to a licensee, when the design or fabrication deficiency affects the ability of structures, systems, and components important to safety to perform their intended safety function. The written report shall be sent to the NRC in accordance with the requirements of § 72.4. The report shall include the following:

(1) A brief abstract describing the deficiency, including all component or system failures that contributed to the deficiency and corrective action taken or planned to prevent recurrence;

(2) A clear, specific, narrative description of what occurred so that knowledgeable readers familiar with the design of the spent fuel storage cask, but not familiar with the details of a particular cask, can understand the deficiency. The narrative description shall include the following specific information as appropriate for the particular event:

(i) Dates and approximate times of discovery;

(ii) The cause of each component or system failure, if known;

(iii) The failure mode, mechanism, and effect of each failed component, if known;

(iv) A list of systems or secondary functions that were also affected for failures of components with multiple functions;

(v) The method of discovery of each component or system failure;

(vi) The manufacturer and model number (or other identification) of each component that failed during the event;

(vii) The model and serial numbers of the affected spent fuel storage casks;
(viii) The licensees that have affected spent fuel storage casks;

(3) An assessment of the safety consequences and implications of the deficiency. This assessment shall include the availability of other systems or components that could have performed the same function as the components and systems that were affected;

(4) A description of any corrective actions planned as a result of the deficiency, including those to reduce the probability of similar occurrences in the future;

(5) Reference to any previous similar deficiencies at the same facility that are known to the certificate holder; and

(6) The name and telephone number of a person within the certificate holder's organization who is knowledgeable about the deficiency and can provide additional information.

Dated at Rockville, Maryland, this 5th day of October, 1999.

For the Nuclear Regulatory Commission.

Andrew L. Bates,

Acting Secretary of the Commission.

[FR Doc. 99–26700 Filed 10–14–99; 8:45 am]

BILLING CODE 7590–01–P

NUCLEAR REGULATORY COMMISSION

[NUREG–1600, Rev. 1]

NRC Enforcement Policy; Enforcement Action Against Nonlicensees Under 10 CFR Part 72

AGENCY: Nuclear Regulatory Commission.

ACTION: Policy statement; revision.

SUMMARY: The Nuclear Regulatory Commission (NRC) is publishing a revision to its Enforcement Policy (NUREG–1600, Rev.1, ''General Statement of Policy and Procedure for NRC Enforcement Actions'') to clarify that enforcement action may be taken against nonlicensees for violations of 10 CFR part 72.

DATES: This action is effective October 15, 1999, while comments are being received. Submit comments on or before November 29, 1999.

ADDRESSES: Submit written comments to: David L. Meyer, Chief, Rules and Directives Branch, Division of Administrative Services, Office of Administration, Mail Stop: T6D59, U.S. Nuclear Regulatory Commission, Washington, DC 20555. Hand deliver comments to: 11555 Rockville Pike, Rockville, Maryland, between 7:30 am and 4:15 pm, Federal workdays. Copies of comments received may be examined at the NRC Public Document Room, 2120 L Street, NW (Lower Level), Washington, DC.

FOR FURTHER INFORMATION CONTACT: Richard W. Borchardt, Director, Office of Enforcement, U.S. Nuclear Regulatory Commission, Washington, DC 20555, (301) 415–2741.

SUPPLEMENTARY INFORMATION: The Commission's ''General Statement of Policy and Procedure for NRC Enforcement Actions'' (Enforcement Policy or Policy) (63 FR 26630, May 13, 1998) primarily addresses violations by licensees and certain nonlicensed persons, including certificate holders, as discussed further in footnote 3 to section I, Introduction and Purpose, and in section X, Enforcement Action Against Nonlicensees.

In 10 CFR part 72 of the NRC's regulations addresses licensing requirements for the independent storage of spent nuclear fuel and high-level radioactive waste. Over the past two years, the Commission has observed problems with the performance of several certificate holders and their contractors and subcontractors in the manufacture of spent fuel storage casks. The Commission has concluded that additional enforcement sanctions; *e.g.*, issuance of Notices of Violations (NOVs) and orders, are required to address the performance problems which have occurred in the spent fuel storage industry. Also, concurrent with publication of this change to the Enforcement Policy, the Commission is amending part 72 to expand its applicability to holders of, and applicants for, Certificates of Compliance (CoCs). While CoCs are legally binding documents, certificate holders or applicants for a CoC have not clearly been brought within the scope of certain part 72 requirements, and the NRC has not had a clear basis to cite these persons for violations of part 72 requirements in the same way it treats licensees. When the NRC has identified a failure to comply with part 72 requirements by these persons, it has taken administrative action by issuing a Notice of Nonconformance (NON) or a Demand for Information rather than an NOV. With these changes to part 72, the Commission will be in a position to issue NOVs and Orders to certificate holders and applicants. While the part 72 changes do not apply to contractors and subcontractors certain existing regulations provide for enforcement action to be taken against contractors and subcontractors, *e.g.*, parts 72.10 and 72.12.

A Notice of Violation (NOV) is a written notice that sets forth one or more violations of a legally binding requirement. The NOV effectively conveys to both the person violating the requirement and the public that a violation of a legally binding requirement has occurred and permits use of graduated severity levels to convey more clearly the safety significance of the violation. Therefore, in addition to the changes to part 72, the Commission is amending part X of the Enforcement Policy, Enforcement Action Against Non-Licensees, to make clear that nonlicensees who are subject to specific regulatory requirements; *e.g.*, part 72, will be subject to enforcement action, including NOVs and orders. The final part 72 rule does not provide authority for issuing civil penalties to nonlicensees other than that already provided under the Deliberate Misconduct Rule in § 72.12.

Paperwork Reduction Act

This policy statement does not contain a new or amended information collection requirement subject to the Paperwork Reduction Act of 1995 (44 U.S.C. 3501 *et seq.*). Existing requirements were approved by the Office of Management and Budget (OMB), approval number 3150–0136. The approved information collection requirements contained in this policy statement appear in Section VII.C.

Public Protection Notification

The NRC may not conduct or sponsor, and a person is not required to respond to, a collection of information unless it displays a currently valid OMB control number.

Small Business Regulatory Enforcement Fairness Act

In accordance with the Small Business Regulatory Enforcement Fairness Act of 1996, the NRC has determined that this action is not a major rule and has verified this determination with the Office of Information and Regulatory Affairs of OMB.

Accordingly, the NRC Enforcement Policy published at 63 FR 26632 is amended by revising the last paragraph of section X to read as follows:

General Statement of Policy and Procedure for NRC Enforcement Actions

* * * * *

X. Enforcement Action Against Non-Licensees

* * * * *

When inspections determine that violations of NRC requirements have occurred, or that contractors have failed to fulfill contractual commitments (*e.g.*, 10 CFR part 50, appendix B) that could adversely affect the quality of a safety significant product or service, enforcement action will be taken. Notices of Violation and civil penalties will be used, as appropriate, for licensee failures to ensure that their contractors have programs that meet applicable requirements. Notices of Violation will be issued for contractors who violate 10 CFR part 21. Civil penalties will be imposed against individual directors or responsible officers of a contractor organization who knowingly and consciously fail to provide the notice required by 10 CFR 21.21(b)(1). Notices of Violation or orders will be used against nonlicensees who are subject to the specific requirements of part 72. Notices of Nonconformance will be used for contractors who fail to meet commitments related to NRC activities but are not in violation of specific requirements.

* * * * *

For the Nuclear Regulatory Commission.

Dated at Rockville, Maryland, this 5th day of October, 1999.

Andrew L. Bates,

Acting Secretary of the Commission.

[FR Doc. 99–26701 Filed 10–14–99; 8:45 am]

BILLING CODE 7590–01–P

Reader Aids

Federal Register

Vol. 64, No. 199

Friday, October 15, 1999

CUSTOMER SERVICE AND INFORMATION

Federal Register/Code of Federal Regulations

General Information, indexes and other finding aids	**202–523–5227**
Laws	**523–5227**

Presidential Documents

Executive orders and proclamations	**523–5227**
The United States Government Manual	**523–5227**

Other Services

Electronic and on-line services (voice)	**523–4534**
Privacy Act Compilation	**523–3187**
Public Laws Update Service (numbers, dates, etc.)	**523–6641**
TTY for the deaf-and-hard-of-hearing	**523–5229**

ELECTRONIC RESEARCH

World Wide Web

Full text of the daily Federal Register, CFR and other publications:

http://www.access.gpo.gov/nara

Federal Register information and research tools, including Public Inspection List, indexes, and links to GPO Access:

http://www.nara.gov/fedreg

E-mail

PENS (Public Law Electronic Notification Service) is an E-mail service for notification of recently enacted Public Laws. To subscribe, send E-mail to

listserv@www.gsa.gov

with the text message:

subscribe PUBLAWS-L your name

Use listserv@www.gsa.gov only to subscribe or unsubscribe to PENS. We cannot respond to specific inquiries.

Reference questions. Send questions and comments about the Federal Register system to:

info@fedreg.nara.gov

The Federal Register staff cannot interpret specific documents or regulations.

FEDERAL REGISTER PAGES AND DATE, OCTOBER

53179–53580 1
53581–53882 4
53883–54198 5
54199–54498 6
54499–54758 7
54759–55114 8
55115–55404 12
55405–55614 13
55615–55808 14
55809–56130 15

CFR PARTS AFFECTED DURING OCTOBER

At the end of each month, the Office of the Federal Register publishes separately a List of CFR Sections Affected (LSA), which lists parts and sections affected by documents published since the revision date of each title.

3 CFR

Proclamations:
4865 (*See* Memorandum of April 16, 1999) 53883
4865 (*See* Memorandum of September 24, 1999) 53883
6763 (See Proclamation 7235) 55611

Administrative Orders:
Memorandums:
September 24, 1999 55809
7227 53877
7228 54193
7229 54195
7230 54197
7231 54755
7232 54757
7233 54759
7234 55405
7235 55611
7236 55613
7237 55615
7238 55617
7239 55619

Executive Orders:
11145 (Amended by EO 13138) 53879
11183 (Amended by EO 13138) 53879
11287 (Amended by EO 13138) 53879
12131 (Amended by EO 13138) 53879
12196 (Amended by EO 13138) 53879
12216 (Amended by EO 13138) 53879
12345 (Amended by EO 13138) 53879
12367 (Amended by EO 13138) 53879
12382 (Amended by EO 13138) 53879
12473 (Amended by EO 13140) 55115
12478 (See EO 13140 55115
12550 (See EO 13140) 55115
12586 (See EO 13140) 55115
12708 (See EO 13140) 55115
12767 (See EO 13140) 55115
12852 (Revoked by EO 13138) 53879
12871 (Amended by EO 13138) 53879
12876 (Amended by EO 13138) 53879
12882 (Amended by EO 13138) 53879
12888 (See EO 13140) 55115
12900 (Amended by EO 13138) 53879
12905 (Amended by EO 13138) 53879
12936 (See EO 13140) 55115
12960 (See EO 13140) 55115
12961 (Revoked by EO 13138) 53879
12994 (Amended by EO 13138) 53879
13010 (Revoked in part by EO 13138) 53879
13017 (Revoked by EO 13138) 53879
13021 (Amended by EO 13138) 53879
13037 (Revoked by EO 13138) 53879
13038 (Revoked by EO 13138) 53879
13050 (Revoked by EO 13138) 53879
13062 (Superseded in part by EO 13138) 53879
13086 (See EO 13140) 55115
13115 (Amended by EO 13138) 53879
13138 53879
13139 54175
13140 55115

Administrative Orders:
Memorandums:
April 16, 1999 53883
Presidential Determinations:
No. 99–38 of September 21, 1999 53573
No. 99–39 of September 21, 1999 53575
No. 99–40 of September 21, 1999 53577
No. 99–41 of September 22, 1999 53579
No. 99–42 of September 29, 1999 54499
No. 99–43 of September 30,

1999 54501
No. 99–44 of September 30, 1999 54503
No. 99–45 of September 30, 1999 53505

5 CFR

532....53179
831....53581
842....53581
870....54761
1201....54507

7 CFR

210....55407
215....55407
220....55407
235....55407
245....55407
301....55811
735....54508
915....53181
923....53885
944....53181
1000....53885
1001....53885
1002....53885
1004....53885
1005....53885
1006....53885
1007....53885
1012....53885
1013....53885
1030....53885
1032....53885
1033....53885
1036....53885
1040....53885
1044....53885
1046....53885
1049....53885
1050....53885
1064....53885
1065....53885
1068....53885
1076....53885
1079....53885
1106....53885
1124....53885
1126....53885
1131....53885
1134....53885
1135....53885
1137....53885
1138....53885
1139....53885
1755....53886

8 CFR

Proposed Rules:
Ch. 1....54794

9 CFR

94....55812, 55813
317....53186
381....53186

10 CFR

20....54543, 55524
50....53582
72....53582, 56114
431....54114
Proposed Rules:
2....55176
50....53270

11 CFR

110....55125
Proposed Rules:
100....55440
102....55440
104....55440

12 CFR

204....53617
262....53188
602....54511
612....55621
614....55621
618....55621
910....55125
Proposed Rules:
714....55866
724....55871
745....55871

13 CFR

Proposed Rules:
121....55873

14 CFR

25....54761
36....55598
39....53189, 53191, 53193, 53620, 53621, 53623, 53625, 54199, 54200, 54202, 54512, 54513, 54515, 54517, 54518, 54763, 54767, 54769, 54770, 54773, 54774, 55407, 55409, 55411, 55413, 55414, 55416, 55621, 55624, 55815
71....53627, 53887, 53888, 53889, 53890, 53891, 53892, 53893, 53894, 53895, 53896, 53898, 53899, 54203, 54204, 54205, 54206, 55131, 55815, 55816, 55817, 55818, 55819, 55820
93....53558
97....55132, 55133, 55135
Proposed Rules:
39....53275, 53951, 53953, 54227, 54229, 54230, 54232, 54234, 54237, 54239, 54240, 54242, 54246, 54248, 54249, 54580, 54582, 54584, 54587, 54589, 54591, 54594, 54596, 54598, 54795, 54797, 54799, 54801, 54804, 54808, 54811, 54815, 54818, 54822, 54826, 54829, 54833, 55177, 55181, 55184, 55188, 55191, 55195, 55196, 55197, 55200, 55204, 55207, 55211, 55440, 55636, 55638, 55640, 55642, 55644
71....53956, 53957
193....53958
450....54448

15 CFR

902....55821
774....54520
902....54732
Proposed Rules:
30....53861
732....53854
740....53854
743....53854
748....53854
750....53854
752....53854
758....53854
762....53854
772....53854

17 CFR

210....53900
228....53900
229....53900
230....53900
239....53900
240....53900
249....53900
260....53900
Proposed Rules:
210....55648
228....55648
229....55648
240....55648

18 CFR

2....54522
157....54522
284....54522
380....54522
385....54522
Proposed Rules:
385....53959

19 CFR

122....53627

20 CFR

Proposed Rules:
404....55214
422....55216
718....54966
722....54966
725....54966
726....54966
727....54966

21 CFR

Ch. II....54794
50....54180
178....53925
312....54180
558....53926
878....53927
900....53195
Proposed Rules:
5....53281
25....53281
314....53960
500....53281
510....53281
558....53281
601....53960
880....53294

22 CFR

Ch. V....54538
40....55417
42....55417
171....54538
514....53928
Proposed Rules:
194....53632

24 CFR

200....53930, 55828
203....56108
234....56108
882....53868
888....53450

25 CFR

516....54541
Proposed Rules:
151....55878

26 CFR

1....55137
Proposed Rules:
1....54836

27 CFR

1....54776
47....55625
55....55625

28 CFR

Ch. I....54794
Proposed Rules:
571....53872

29 CFR

4044....55828

30 CFR

250....53195
948....53200
950....53202
Proposed Rules:
250....53298
901....55878
915....54840
946....54843
948....54845

32 CFR

700....56062
1800....53769

33 CFR

100....53208, 53628, 55829, 55830
117....53209, 54776, 55137, 55419, 55831
165....55138, 55420
Proposed Rules:
20....53970
100....54847, 54849
117....55217
165....54242, 54963
175....53971
207....55441

34 CFR

Proposed Rules:
75....54254

36 CFR

Proposed Rules:
217....59074
219....59074

37 CFR

Proposed Rules:
1....53772
3....53772
5....53772
10....53772

38 CFR

3....54206
17....54207
Proposed Rules:
20....53302

39 CFR

Proposed Rules:
111 54255

40 CFR

52 ....53210, 53931, 54559, 55139, 55141, 55421, 55831
61 53212
62 55141
76 55834
81 55421
180 ....54218, 54777, 54779, 55838
201 55141
271 ....55142, 55153, 55629
300 ....53213, 53629

Proposed Rules:
49 54851
52 ....53303, 53973, 54600, 54601, 54851, 55219, 55220, 55442, 55662, 55667, 55879
76 55880
81 55442
122 53304
123 53304
124 53304
130 53304
131 53304
132 53632
197 53304
258 53976
261 ....55443, 55880
264 54604
271 ....55222, 55671

41 CFR

51-2 55841
51-5 55841

42 CFR

Proposed Rules:
57 54263
58 54263
447 54263

43 CFR

1820 53213
3500 53512
3510 53512
3520 53512
3530 53512
3540 53512
3550 53512
3560 53512
3570 53512
3800 53213

Proposed Rules:
2800 55452
2880 55452

44 CFR

65 ....53931, 53933, 53936
67 ....53938, 53939
206 55158

Proposed Rules:
67 ....53980, 53982

45 CFR

96 55843

Proposed Rules:
302 55074
303 55074
304 55074
305 55074
308 55102

46 CFR

1 53220
2 53220
4 53220
10 ....53220, 53230
12 53230
15 53220
31 53220
34 53220
38 53220
52 53220
53 53220
54 53220
56 53220
57 53220
58 53220
59 53220
61 53220
63 53220
64 53220
67 53220
68 53220
69 53220
76 53220
91 53220
95 53220
98 53220
105 53220
107 53220
108 53220
109 53220
118 53220
125 53220
133 53220
147 53220
151 53220
153 53220
160 53220
161 53220
162 53220
167 53220
169 53220
177 53220
181 53220
189 53220
193 53220
197 53220
199 53220
204 54782

Proposed Rules:
5 53970

47 CFR

Ch. I 54561, 55671
0 ....55161, 55425
1 53231
13 53231
20 54564
22 ....53231, 54564
64 ....53242, 53944, 54577, 55163, 55164
73 ....54224, 54225, 54783, 54784, 54785, 54786, 55172, 55173, 55174, 55434
80 53231
87 53231
90 53231
95 53231
97 53231
101 53231

Proposed Rules:
54 53648
61 53648
69 53648
73 ....53655, 54268, 54269, 54270, 55222, 55223, 55452, 55453
76 54854

48 CFR

Ch. 19 54538
1 53264
15 53264
19 53264
52 53264
209 55632
211 55632
214 55632
237 53447
252 55632
415 54963

Proposed Rules:
909 55453
970 55453
1804 54270
1812 54270
1852 54270

49 CFR

172 54730
1002 53264
1003 53264
1007 53264
1011 53264
1012 53264
1014 53264
1017 53264
1018 53264
1019 53264
1021 53264
1034 53264
1039 53264
1100 53264
1101 53264
1103 53264
1104 53264
1105 53264
1113 53264
1133 53264
1139 53264
1150 53264
1151 53264
1152 53264
1177 53264
1180 53264
1184 53264

Proposed Rules:
71 55892
661 54855

50 CFR

216 53269
222 ....55858, 55860
223 ....55434, 55858, 55860
600 54786
635 ....53949, 54577, 55633
648 ....54732, 55821
660 54786
679 ....53630, 53950, 54225, 54578, 54791, 54792, 55438, 55634, 55865

Proposed Rules:
17 ....53655, 55892
648 55688
660 ....54272, 55689
679 53305

REMINDERS

The items in this list were editorially compiled as an aid to Federal Register users. Inclusion or exclusion from this list has no legal significance.

RULES GOING INTO EFFECT OCTOBER 15, 1999

COMMERCE DEPARTMENT

National Oceanic and Atmospheric Administration

Fishery conservation and management:

Atlantic highly migratory species—

Large coastal shark; published 10-5-99

ENVIRONMENTAL PROTECTION AGENCY

Air quality implementation plans; approval and promulgation; various States:

Connecticut; published 8-16-99

Minnesota; published 8-16-99

New Hampshire; published 8-16-99

Wisconsin; published 8-16-99

Pesticides; tolerances in food, animal feeds, and raw agricultural commodities:

Rhizobium inoculants; published 10-15-99

TRANSPORTATION DEPARTMENT

Federal Aviation Administration

Airworthiness directives:

Pratt & Whitney; published 10-15-99

Class E airspace; published 9-29-99¶

RULES GOING INTO EFFECT OCTOBER 16, 1999

TRANSPORTATION DEPARTMENT

Coast Guard

Regattas and marine parades:

Stone Mountain Productions; published 10-15-99

COMMENTS DUE NEXT WEEK

AGRICULTURE DEPARTMENT

Agricultural Marketing Service

Tomatoes grown in—

Florida; comments due by 10-19-99; published 8-20-99

Walnuts grown in—

California; comments due by 10-18-99; published 8-19-99

AGRICULTURE DEPARTMENT

Rural Utilities Service

Telecommunications loan:

General policies, types of loans and loan requirements; comments due by 10-18-99; published 9-17-99

Telecommunications loans:

General policies, types of loans and loan requirements; comments due by 10-18-99; published 9-17-99

COMMERCE DEPARTMENT

Export Administration Bureau

Export administration regulations:

Commercial charges and devices containing energetic materials; exports and reexports; comments due by 10-18-99; published 9-1-99

COMMERCE DEPARTMENT

National Oceanic and Atmospheric Administration

Fishery conservation and management:

Caribbean, Gulf, and South Atlantic fisheries—

Gulf of Mexico Region fishery management plans; comments due by 10-18-99; published 8-18-99

Northeastern United States fisheries—

Atlantic herring; comments due by 10-18-99; published 9-16-99

CONSUMER PRODUCT SAFETY COMMISSION

Consumer Product Safety Act:

Multi-purpose lighters; child resistance standard; comments due by 10-18-99; published 8-4-99

DEFENSE DEPARTMENT

Civilian health and medical program of uniformed services (CHAMPUS):

Prosthetic devices; comments due by 10-19-99; published 8-20-99

ENVIRONMENTAL PROTECTION AGENCY

Air programs; approval and promulgation; State plans for designated facilities and pollutants:

Arizona; comments due by 10-20-99; published 9-20-99

Delaware; comments due by 10-18-99; published 9-17-99

Delaware; correction; comments due by 10-18-99; published 9-29-99

Nevada; comments due by 10-20-99; published 9-20-99

Air quality implementation plans; approval and promulgation; various States:

Arizona; comments due by 10-20-99; published 9-20-99

California; comments due by 10-22-99; published 9-22-99

Nevada; comments due by 10-21-99; published 10-1-99

Oregon; comments due by 10-21-99; published 9-21-99

South Dakota; comments due by 10-21-99; published 9-21-99

Hazardous waste:

Identification and listing—

Dye and pigment industries; comments due by 10-21-99; published 9-8-99

Pesticides; tolerances in food, animal feeds, and raw agricultural commodities:

Glufosinate ammonium; comments due by 10-18-99; published 8-18-99

Pyriproxyfen; comments due by 10-18-99; published 8-18-99

Superfund program:

National oil and hazardous substances contingency plan—

National priorities list update; comments due by 10-18-99; published 9-17-99

National priorities list update; comments due by 10-18-99; published 9-17-99

National priorities list; update; comments due by 10-18-99; published 9-17-99

Water programs:

Clean Water Act—

Water quality planning and management; comments due by 10-22-99; published 8-23-99

Water quality planning and management; National Pollutant Discharge Elimination System program and Federal antidegradation policy; comments due by 10-22-99; published 8-23-99

FEDERAL COMMUNICATIONS COMMISSION

Radio frequency devices:

Digital television receivers; closed captioning requirements; comments due by 10-18-99; published 8-2-99

Radio stations; table of assignments:

Oregon; comments due by 10-18-99; published 9-10-99

GENERAL SERVICES ADMINISTRATION

Acquisition regulations:

Architect-engineer procurements; selection criteria; comments due by 10-18-99; published 8-17-99

HEALTH AND HUMAN SERVICES DEPARTMENT

Food and Drug Administration

Human drugs:

Topical antifungal products (OTC); tentative final monograph; comments due by 10-20-99; published 7-22-99

HEALTH AND HUMAN SERVICES DEPARTMENT

Health Care Financing Administration

Group and individual health insurance markets; Federal enforcement; comments due by 10-19-99; published 8-20-99

Medicare:

Graduate medical education; incentive payments under plans for voluntary reduction in number of residents; comments due by 10-18-99; published 8-18-99

HOUSING AND URBAN DEVELOPMENT DEPARTMENT

Acquisition regulations:

Miscellaneous amendments; comments due by 10-22-99; published 8-23-99

INTERIOR DEPARTMENT

Minerals Management Service

Royalty management:

Federal geothermal resources valuation; comments due by 10-18-99; published 8-19-99

LABOR DEPARTMENT

Occupational Safety and Health Administration

Construction safety and health standards:

Fall protection; comments due by 10-22-99; published 7-14-99

MANAGEMENT AND BUDGET OFFICE

Federal Procurement Policy Office

Acquisition regulations:

Cost Accounting Standards Board—

Cost accounting practices; changes; comments due by 10-19-99; published 8-20-99

NUCLEAR REGULATORY COMMISSION

Radiation protection standards:

Criticality guidance for low-level waste; proposed compatibility designation ange; comments due by 10-20-99; published 9-20-99

Spent nuclear fuel and high-level radioactive waste; independent storage; licensing requirements:

Approved spent fuel storage casks; list additions; comments due by 10-22-99; published 9-22-99

POSTAL RATE COMMISSION

Practice and procedure:

Library reference rule; comments due by 10-20-99; published 9-30-99

RAILROAD RETIREMENT BOARD

Emergency regulations:

Plan of operation during national emergency; procedures update; comments due by 10-18-99; published 8-17-99

TRANSPORTATION DEPARTMENT

Federal Aviation Administration

Air carrier certification and operations:

Aging airplane safety; comments due by 10-18-99; published 8-18-99

Airworthiness directives:

Airbus; comments due by 10-20-99; published 9-20-99

Boeing; comments due by 10-18-99; published 9-2-99

Eurocopter France; comments due by 10-22-99; published 8-23-99

Airworthiness standards:

Transport category airplanes—

Landing gear shock absorption test requirements; comments due by 10-18-99; published 6-18-99

Class E airspace; comments due by 10-18-99; published 8-27-99

Schools and other certificated agencies:

Repair stations; Part 145 review; comments due by 10-19-99; published 6-21-99

TREASURY DEPARTMENT

Internal Revenue Service

Procedure and administration:

Compromises of internal revenue taxes; cross reference; comments due by 10-19-99; published 7-21-99

LIST OF PUBLIC LAWS

This is a continuing list of public bills from the current session of Congress which have become Federal laws. It may be used in conjunction with ''P L U S'' (Public Laws Update Service) on 202–523–6641. This list is also available online at http://www.nara.gov/fedreg.

The text of laws is not published in the **Federal Register** but may be ordered in ''slip law'' (individual pamphlet) form from the Superintendent of Documents, U.S. Government Printing Office, Washington, DC 20402 (phone, 202–512–1808). The text will also be made available on the Internet from GPO Access at http://www.access.gpo.gov/nara/index.html. Some laws may not yet be available.

H.R. 2084/P.L. 106–69

Department of Transportation and Related Agencies Appropriations Act, 2000 (Oct. 9, 1999; 113 Stat. 986)

S. 1606/P.L. 106–70

To extend for 9 additional months the period for which chapter 12 of title 11, United States Code, is reenacted. (Oct. 9, 1999; 113 Stat. 1031)

S. 249/P.L. 106–71

Missing, Exploited, and Runaway Children Protection Act (Oct. 12, 1999; 113 Stat. 1032)

Last List October 8, 1999

Public Laws Electronic Notification Service (PENS)

PENS is a free electronic mail notification service of newly enacted public laws. To subscribe, go to www.gsa.gov/archives/publaws-l.html or send E-mail to **listserv@www.gsa.gov** with the following text message:

SUBSCRIBE PUBLAWS-L Your Name.

Note: This service is strictly for E-mail notification of new laws. The text of laws is not available through this service. **PENS** cannot respond to specific inquiries sent to this address.