8–31–99
Vol. 64 No. 168
Pages 47337–47648

# federal register

Tuesday
August 31, 1999

The **FEDERAL REGISTER** is published daily, Monday through Friday, except official holidays, by the Office of the Federal Register, National Archives and Records Administration, Washington, DC 20408, under the Federal Register Act (44 U.S.C. Ch. 15) and the regulations of the Administrative Committee of the Federal Register (1 CFR Ch. I). The Superintendent of Documents, U.S. Government Printing Office, Washington, DC 20402 is the exclusive distributor of the official edition.

The **Federal Register** provides a uniform system for making available to the public regulations and legal notices issued by Federal agencies. These include Presidential proclamations and Executive Orders, Federal agency documents having general applicability and legal effect, documents required to be published by act of Congress, and other Federal agency documents of public interest.

Documents are on file for public inspection in the Office of the Federal Register the day before they are published, unless the issuing agency requests earlier filing. For a list of documents currently on file for public inspection, see http://www.nara.gov/fedreg.

**The seal of the National Archives and Records Administration authenticates the Federal Register** as the official serial publication established under the Federal Register Act. Under 44 U.S.C. 1507, the contents of the **Federal Register** shall be judicially noticed.

The **Federal Register** is published in paper and on 24x microfiche. It is also available online at no charge as one of the databases on GPO Access, a service of the U.S. Government Printing Office.

The online edition of the **Federal Register** is issued under the authority of the Administrative Committee of the Federal Register as the official legal equivalent of the paper and microfiche editions (44 U.S.C. 4101 and 1 CFR 5.10). It is updated by 6 a.m. each day the **Federal Register** is published and it includes both text and graphics from Volume 59, Number 1 (January 2, 1994) forward.

GPO Access users can choose to retrieve online **Federal Register** documents as TEXT (ASCII text, graphics omitted), PDF (Adobe Portable Document Format, including full text and all graphics), or SUMMARY (abbreviated text) files. Users should carefully check retrieved material to ensure that documents were properly downloaded.

On the World Wide Web, connect to the **Federal Register** at http://www.access.gpo.gov/nara. Those without World Wide Web access can also connect with a local WAIS client, by Telnet to swais.access.gpo.gov, or by dialing (202) 512-1661 with a computer and modem. When using Telnet or modem, type swais, then log in as guest with no password.

For more information about GPO Access, contact the GPO Access User Support Team by E-mail at gpoaccess@gpo.gov; by fax at (202) 512–1262; or call (202) 512–1530 or 1–888–293–6498 (toll free) between 7 a.m. and 5 p.m. Eastern time, Monday–Friday, except Federal holidays.

The annual subscription price for the **Federal Register** paper edition is $555, or $607 for a combined **Federal Register,** Federal Register Index and List of CFR Sections Affected (LSA) subscription; the microfiche edition of the **Federal Register** including the Federal Register Index and LSA is $220. Six month subscriptions are available for one-half the annual rate. The charge for individual copies in paper form is $8.00 for each issue, or $8.00 for each group of pages as actually bound; or $1.50 for each issue in microfiche form. All prices include regular domestic postage and handling. International customers please add 25% for foreign handling. Remit check or money order, made payable to the Superintendent of Documents, or charge to your GPO Deposit Account, VISA, MasterCard or Discover. Mail to: New Orders, Superintendent of Documents, P.O. Box 371954, Pittsburgh, PA 15250–7954.

There are no restrictions on the republication of material appearing in the **Federal Register.**

**How To Cite This Publication:** Use the volume number and the page number. Example: 64 FR 12345.

## SUBSCRIPTIONS AND COPIES

| | |
|---|---|
| **PUBLIC** | |
| **Subscriptions:** | |
| Paper or fiche | **202–512–1800** |
| Assistance with public subscriptions | **512–1806** |
| **General online information** | **202–512–1530; 1–888–293–6498** |
| **Single copies/back copies:** | |
| Paper or fiche | **512–1800** |
| Assistance with public single copies | **512–1803** |
| **FEDERAL AGENCIES** | |
| **Subscriptions:** | |
| Paper or fiche | **523–5243** |
| Assistance with Federal agency subscriptions | **523–5243** |

Printed on recycled paper.

# Contents

**Federal Register**

Vol. 64, No. 168

Tuesday, August 31, 1999

**Agricultural Marketing Service**
RULES
Eggs, inspection; and agricultural and vegetable seeds quality inspection and certification; CFR correction, 47349
Oranges and grapefruit grown in—
Texas, 47349–47358

**Agriculture Department**
*See* Agricultural Marketing Service
*See* Commodity Credit Corporation
*See* Forest Service
*See* Rural Housing Service

**Air Force Department**
NOTICES
Meetings:
Community College Board of Visitors, 47490

**Army Department**
*See* Engineers Corps

**Centers for Disease Control and Prevention**
NOTICES
Meetings:
National Center for Environmental Health—
Pediatric Centers Directors, 47507
National Vaccine Advisory Committee, 47507–47508

**Children and Families Administration**
NOTICES
Grant and cooperative agreement awards:
National Adoption Center, 47508

**Coast Guard**
RULES
Drawbridge operations:
New York, 47389–47390
Vessel documentation and measurement:
Standard measurement system exemption from gross tonnage, 47402–47404
PROPOSED RULES
Regattas and marine parades:
Puerto Rico International Cup, 47461–47462

**Committee for the Implementation of Textile Agreement**
NOTICES
Cotton, wool, and man-made textiles:
Philippines; republication, 47485–47486

**Commodity Credit Corporation**
RULES
Loan and purchase programs:
Emergency livestock assistance
1998 Flood Compensation Program, 47358–47361

**Commodity Futures Trading Commission**
PROPOSED RULES
Commodity option transactions:
Enumerated agricultural commodities; off-exchange trade options, 47452–47461

**Corporation for National and Community Service**
NOTICES
Agency information collection activities:
Submission for OMB review; comment request, 47486–47487

**Defense Department**
*See* Air Force Department
*See* Engineers Corps
NOTICES
Agency information collection activities:
Proposed collection; comment request, 47487
Civilian health and medical program of uniformed services (CHAMPUS):
TRICARE program—
Mental health rate updates; 2000 FY, 47487–47488
Meetings:
Defense Intelligence Agency Science and Technology Advisory Board, 47489
Vieques, PR; special panel on military operations, 47489
Reports and guidance documents; availability, etc.:
Global Positioning System spectrum protection; report to Congress, 47489–47490

**Education Department**
NOTICES
Meetings:
National Commission on Mathematics and Science Teaching for 21st Century, 47490–47491
Postsecondary education:
Federal Perkins Loan, Federal Work-Study, and Federal Supplemental Educational Opportunity Grant Programs—
Fiscal operations report and application; filing closing date, 47492–47493
Underuse of funds; allocation reduction waiver request; closing date, 47491–47492
Senior Executive Service:
Performance Review Board; membership, 47493

**Employment and Training Administration**
NOTICES
Adjustment assistance:
Arrow Automotive Industries, 47521
Banko Petroleum Management, Inc., 47522
Butch Spurlin Mud Consulting, 47522
Corning, Inc., 47522
Fina Oil & Chemical Co., 47522–47523
Guilford of Maine, 47523
Horner Flooring Co., Inc., 47523
Jasper Textiles, Inc., 47523
Jencraft Corp., 47523
Koh-I-Noor, Inc., 47524
Safe Car, Inc., 47524
Southwestern Energy Production Co., 47524
Tektronix, Inc., 47524
Thomson Precision Ball Co., LLC, 47524
Thunderbird Mining, 47525
Timken Co., 47525
Trim Master, Inc., 47525
Viskase Corp., 47525
Weldon Machine Tool et al., 47525–47527

Adjustment assistance and NAFTA transitional adjustment assistance:
Sherman Lumber Co., 47521
NAFTA transitional adjustment assistance:
Champion Aviation Products, 47527–47528
Procter & Gamble Paper Products Co., 47528–47529
Quest Petroleum Corp., 47529

**Energy Department**
*See* Federal Energy Regulatory Commission
**NOTICES**
Powerplant and industrial fuel use; new electric powerplant coal capability:
Self-certification filings—
Tenaska Gateway Partners, Ltd., 47493–47494

**Engineers Corps**
**PROPOSED RULES**
Navigation regulations:
St. Marys Falls Canal and Soo Locks, MI; administration and navigation, 47462–47464

**Environmental Protection Agency**
**RULES**
Acquisition regulations:
Contracting by negotiation, 47409–47418
Air quality implementation plans; approval and promulgation; various States:
California, 47390–47395
North Dakota, 47395–47401
Superfund program:
National oil and hazardous substances contingency plan—
National priorities list update, 47401–47402
**PROPOSED RULES**
Air quality implementation plans; approval and promulgation; various States:
California, 47464–47465
North Dakota, 47465
Superfund program:
National oil and hazardous substances contingency plan—
National priorities list update, 47465–47483
**NOTICES**
Committees; establishment, renewal, termination, etc.:
National Environmental Justice Advisory Council, 47502

**Executive Office of the President**
*See* Presidential Documents
*See* Science and Technology Policy Office

**Federal Aviation Administration**
**RULES**
Air traffic operating and flight rules, etc.:
Kodak Albuquerque International Balloon Fiesta, NM; airspace and flight operations requirements
Correction, 47563
Airworthiness directives:
Aerospatiale, 47384–47385
Bell, 47362–47365
Boeing, 47365–47368 , 47372–47374 , 47377–47382
de Havilland, 47374–47376
Fokker, 47382–47384
Israel Aircraft Industries, Ltd., 47371–47372
Raytheon, 47376–47377
Short Brothers, 47368–47371
Airworthiness standards:
Rotorcraft; normal category—
Maximum weight and passenger seat limitation; correction, 47563
Rotorcraft; transport category—
Rotorcraft performance; correction, 47563
Class C airspace, 47385–47386
Class E airspace, 47386–47387
Procedural rules:
Protests and contract disputes procedures; and Equal Access to Justice Act implementation
Correction, 47361–47362
Standard instrument approach procedures, 47388–47389
VOR Federal airways; correction, 47563
**PROPOSED RULES**
Airworthiness directives:
Boeing, 47440–47442
McDonnell Douglas, 47438–47440
Mitsubishi, 47442–47446
Rolls-Royce plc., 47447–47449
Class E airspace, 47449–47452
**NOTICES**
Agency information collection activities:
Submission for OMB review; comment request, 47561

**Federal Communications Commission**
**RULES**
Radio stations; table of assignments:
Arizona, 47405–47408
Arkansas, 47404–47405, 47407
California, 47406
Colorado, 47406–47409
Kansas, 47405–47406 , 47408
**PROPOSED RULES**
Radio stations; table of assignments:
New Mexico, 47484
Various States, 47483–47484
**NOTICES**
Meetings:
Public Safety National Coordination Committee, 47502–47503

**Federal Emergency Management Agency**
**RULES**
Disaster assistance:
Administrative and audit requirements; CFR correction, 47402
**NOTICES**
Disaster and emergency areas:
Iowa, 47503–47504
Minnesota, 47504–47505

**Federal Energy Regulatory Commission**
**NOTICES**
Electric rate and corporate regulation filings:
Virginia Electric & Power Co., et al., 47497–47500
Environmental statements; availability, etc.:
Transwestern Pipeline Co., 47500–47501
Hydroelectric applications, 47501–47502
*Applications, hearings, determinations, etc.:*
Gas Transport, Inc., 47494
Illinova Power Marketing, Inc., et al., 47494–47495
KO Transmission Co., 47495
Natural Gas Pipeline Co. of America, 47495
Reliant Energy Gas Transmission Co., 47495–47496
Texas Gas Transmission Corp., 47496
Trailblazer Pipeline Co., 47496–47497

**Federal Highway Administration**
NOTICES
Environmental statements; notice of intent:
Paulding and Defiance Counties, OH and Allen County, IN, 47561–47562

**Federal Trade Commission**
NOTICES
Prohibited trade practices:
Kroger Co. et al., 47505–47507

**Fish and Wildlife Service**
RULES
Migratory bird hunting:
Seasons, limits, and shooting hours; establishment, etc., 47418–47437
NOTICES
Migratory bird hunting:
Alaska; harvest policy update, 47512–47514

**Food and Drug Administration**
NOTICES
Agency information collection activities:
Submission for OMB review; comment request, 47508–47509
Meetings:
Medical Devices Advisory Committee, 47509

**Forest Service**
NOTICES
Meetings:
Deschutes Provincial Interagency Executive Committee Advisory Committee, 47485

**Health and Human Services Department**
*See* Centers for Disease Control and Prevention
*See* Children and Families Administration
*See* Food and Drug Administration
*See* National Institutes of Health
*See* Public Health Service

**Immigration and Naturalization Service**
NOTICES
Agency information collection activities:
Proposed collection; comment request, 47518–47520
Submission for OMB review; comment request, 47520–47521

**Interior Department**
*See* Fish and Wildlife Service
*See* Land Management Bureau
*See* National Park Service
*See* Reclamation Bureau
NOTICES
Committees; establishment, renewal, termination, etc.:
Front Range Resource Advisory Council et al., 47512

**International Trade Commission**
NOTICES
Meetings; Sunshine Act, 47517–47518

**Justice Department**
*See* Immigration and Naturalization Service

**Labor Department**
*See* Employment and Training Administration
*See* Occupational Safety and Health Administration

**Land Management Bureau**
NOTICES
Environmental statements; notice of intent:
New Mexico and Colorado; various counties; pipeline facilities construction and transportation of petroleum products via underground pipeline, 47514–47515
Public land orders:
Alaska, 47515
California, 47515
Colorado, 47515–47516

**National Archives and Records Administration**
NOTICES
Electronic copies previously covered by General Records Schedule 20; records schedules availability and comment request, 47529–47530
Meetings:
Presidential Libraries Advisory Committee, 47530

**National Highway Traffic Safety Administration**
RULES
Motor vehicle safety standards:
Child restraint systems—
Child restraint anchorage systems, 47565–47608

**National Institutes of Health**
NOTICES
Meetings:
National Institute of Allergy and Infectious Diseases, 47510–47511
National Institute of Dental and Craniofacial Research, 47510
National Institute of Diabetes and Digestive and Kidney Diseases, 47509–47510
National Institute on Drug Abuse, 47510

**National Park Service**
NOTICES
National Register of Historic Places:
Pending nominations, 47516–47517

**National Transportation Safety Board**
NOTICES
Meetings; Sunshine Act, 47530

**Nuclear Regulatory Commission**
NOTICES
Meetings:
Reactor Safeguards Advisory Committee, 47539–47540
Meetings; Sunshine Act, 47540
Reports and guidance documents; availability, etc.:
Radiation Standards Interagency Steering Committee; 1998 annual report, 47540–47541
*Applications, hearings, determinations, etc.:*
Deleo, Alfonso, Jr., 47530–47532
Indiana Michigan Power Co., 47532–47537
Vermont Yankee Nuclear Power Corp., 47537–47539

**Occupational Safety and Health Administration**
PROPOSED RULES
Construction safety and health standards:
Fall protection
Correction, 47461

**Presidential Documents**
PROCLAMATIONS
*Special observances:*
America Goes Back to School (Proc. 7218), 47337–47338

**EXECUTIVE ORDERS**
Committees; establishment, renewal, termination, etc.:
Labor Organization, President's Committee on the International; amendment (EO 13135), 47339
**ADMINISTRATIVE ORDERS**
Economic Community of West African States' Monitoring Group (ECOMOG); military assistance (Presidential Determination No. 99-34 of Aug. 13, 1999), 47343
Refugee admissions; revised allocations (Presidential Determination No. 99-33 of Aug. 12, 1999), 47341
Religious Freedom Act of 1998, International; delegation of authority (Memorandum of Aug. 17, 1999), 47345
Yugoslavia, United Nations War Crimes Tribunal for the former; drawdown of services and commodities (Presidential Determination No. 99-35 of Aug. 17, 1999), 47347

**Public Health Service**
*See* Centers for Disease Control and Prevention
*See* Food and Drug Administration
*See* National Institutes of Health
**NOTICES**
Meetings:
Human Exposure Assessment; Role in Prevention of Environmental Disease; workshop, 47511–47512

**Railroad Retirement Board**
**NOTICES**
Agency information collection activities:
Submission for OMB review; comment request, 47541

**Reclamation Bureau**
**NOTICES**
Meetings:
Glen Canyon Technical Work Group, 47517

**Rural Housing Service**
**NOTICES**
Agency information collection activities:
Proposed collection; comment request; correction, 47563

**Science and Technology Policy Office**
**NOTICES**
Meetings:
President's Committee of Advisors on Science and Technology, 47502

**Securities and Exchange Commission**
**NOTICES**
Agency information collection activities:
Submission for OMB review; comment request, 47541
Investment Company Act of 1940:
Exemption applications—
Target/United Funds, Inc., et al., 47550–47557
Self-regulatory organizations; proposed rule changes:
Midwest Clearing Corp., 47557
*Applications, hearings, determinations, etc.:*
Mitchell Hutchins Series Trust et al., 47541–47548
Union Central Life Insurance Co. et al., 47548–47550

**Small Business Administration**
**NOTICES**
Agency information collection activities:
Proposed collection; comment request, 47557–47558

**Social Security Administration**
**NOTICES**
Agency information collection activities:
Proposed collection and submission for OMB review; comment request, 47558–47559

**State Department**
**NOTICES**
Meetings:
Private International Law Advisory Committee, 47559–47560
Senior Executive Service:
Performance Review Board; membership, 47560

**State Justice Institute**
**NOTICES**
Grants, cooperative agreements, and contracts; guidelines, 47609–47647

**Transportation Department**
*See* Coast Guard
*See* Federal Aviation Administration
*See* Federal Highway Administration
*See* National Highway Traffic Safety Administration
**NOTICES**
Aviation proceedings:
Agreements filed; weekly receipts, 47560–47561
Certificates of public convenience and necessity and foreign air carrier permits; weekly applications, 47561

---

**Separate Parts In This Issue**

**Part II**
Department of Transportation, National Highway Traffic Safety Administration, 47565–47608

**Part III**
Department of Justice, State Justice Institute, 47609–47647

---

**Reader Aids**
Consult the Reader Aids section at the end of this issue for phone numbers, online resources, finding aids, reminders, and notice of recently enacted public laws.

## CFR PARTS AFFECTED IN THIS ISSUE

A cumulative list of the parts affected this month can be found in the Reader Aids section at the end of this issue.


**3 CFR**

**Proclamations:**

7218 ..... 47337

**Executive Orders:**

12216 (Amended by EO 13135) ..... 47339

13135 ..... 47339

**Administrative Orders**

Memorandums:

August 17, 1999 ..... 47345

Presidential Determinations:

No. 98–39 of September 30, 1998 (See Presidential Determination No. 99–33 of August 12, 1999) ..... 47341

No. 99–33 of August 12, 1999 ..... 47341

No. 99–34 of August 13, 1999 ..... 47343

No. 99–35 of August 17, 1999 ..... 47347

**7 CFR**

57 ..... 47349

75 ..... 47349

906 ..... 47349

1439 ..... 47358

**14 CFR**

14 ..... 47361

17 ..... 47361

27 ..... 47563

29 ..... 47563

39 (11 documents) ..... 47362, 47365, 47368, 47370, 47371, 47372, 47374, 47376, 47377, 47382, 47384

71 (3 documents) ..... 47385, 47386, 47563

91 ..... 47563

97 ..... 47388

**Proposed Rules:**

39 (4 documents) ..... 47438, 47440, 47442, 47447

71 (2 documents) ..... 47449, 47451

**17 CFR**

**Proposed Rules:**

3 ..... 47452

32 ..... 47452

**29 CFR**

**Proposed Rules:**

1926 ..... 47461

**33 CFR**

117 ..... 47389

**Proposed Rules:**

100 ..... 47461

207 ..... 47462

**40 CFR**

52 (3 documents) ..... 47390, 47392, 47395

60 ..... 47395

300 ..... 47401

**Proposed Rules:**

52 (3 documents) ..... 47464, 47465

60 ..... 47465

300 (3 documents) ..... 47465, 47478, 47481

**44 CFR**

206 ..... 47402

**46 CFR**

69 ..... 47402

**47 CFR**

73 (11 documents) ..... 47404, 47405, 47406, 47407, 47408

**Proposed Rules:**

73 (2 documents) ..... 47483, 47484

**48 CFR**

1503 ..... 48409

1515 ..... 47409

1552 ..... 47409

**49 CFR**

571 ..... 47566

**50 CFR**

20 ..... 47418

Federal Register
Vol. 64, No. 168
Tuesday, August 31, 1999

# Presidential Documents

**Title 3—**

**The President**

**Proclamation 7218 of August 27, 1999**

## America Goes Back to School, 1999

**By the President of the United States of America**

**A Proclamation**

Education has always been at the heart of opportunity in America. It opens doors for our young people, gives them the tools they need to succeed, and instills in them a sense of responsibility as they strive to make the most of their lives. However, while the importance of education is unchanging, the challenges facing America's schools and students are not. There are now more children, from more diverse backgrounds, in our public schools than at any time in our country's history. We must ensure that their education gives them the knowledge and skills they need to help our Nation thrive in the new century.

America's current prosperity offers us an unprecedented opportunity to invest in our children's education. I am proud that we have begun that task by opening the doors of college to all our young people with tax credits and more affordable student loans, more Pell grants and work-study jobs, education IRAs, and the new HOPE Scholarship tax cut that more than 5 million Americans will have received by the end of this year. I have also announced $43 million in grants to help States and communities to recruit talented people into teaching jobs and improve the quality of teaching nationwide.

These are important accomplishments, but we must build on them. The goal of the America Goes Back to School initiative is to support family and community involvement in childhood learning and to build strong community support for our schools, teachers, and students.

This year's theme—''Challenge Our Students and They Will Soar''—reflects our faith in America's youth and our commitment to providing them with the tools they need to succeed in our rapidly changing world. We must turn around failing schools, hold States and school districts accountable for helping all children reach high academic standards, support charter schools and other forms of public school choice, expand after-school and summer programs, develop pathways to college and careers, and provide safe, drug-free schools for all our children. We must ensure that all our students have access to computers and that every classroom and library is connected to the Internet. If we want our children to compete at a world-class level, they must have modern, world-class schools. I am therefore challenging the Congress to enact my proposals to build and modernize 6,000 public schools; and I am also asking the Congress to continue funding to hire 100,000 well-prepared teachers to reduce class size in the early grades, the years that we know—intuitively and through research—are critical to the development of children's learning and thinking skills.

My Administration is working hard to improve our Nation's education system, but no government effort can replace the vision, encouragement, and dedication of our families and communities. As America's students go back to school this year, let us pledge to provide every child with a safe and supportive environment in which to learn and grow, and let us ensure that every segment of our society is involved in the effort. Let us also resolve that our young people will return to schools that are genuine places

of learning, where they receive the care, attention, and education they need to reach their full potential.

NOW, THEREFORE, I, WILLIAM J. CLINTON, President of the United States of America, by virtue of the authority vested in me by the Constitution and laws of the United States, do hereby proclaim August 29 through September 11, 1999, as a time when America Goes Back to School. I encourage parents, schools, community and State leaders, businesses, civic and religious organizations, and the people of the United States to observe this period with appropriate ceremonies and activities expressing support for high academic standards and promoting family and community involvement in providing a quality education for every child.

IN WITNESS WHEREOF, I have hereunto set my hand this twenty-seventh day of August, in the year of our Lord nineteen hundred and ninety-nine, and of the Independence of the United States of America the two hundred and twenty-fourth.

William J. Clinton

[FR Doc. 99–22777
Filed 8–30–99; 8:45 am]
Billing code 3195–01–P

# Presidential Documents

**Executive Order 13135 of August 27, 1999**

## Amendment to Executive Order 12216, President's Committee on the International Labor Organization

By the authority vested in me as President by the Constitution and the laws of the United States of America, including the Federal Advisory Committee Act, as amended (5 U.S.C. App.), it is hereby ordered that Executive Order 12216 is amended as follows: The second sentence of section 1–101 is amended by substituting ''the Assistant to the President for Economic Policy, and the Presidents of...'' for ''and the Presidents of...''.

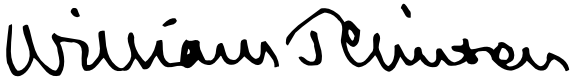

THE WHITE HOUSE,
*August 27, 1999.*

[FR Doc. 99–22778
Filed 8–30–99; 8:45 am]
Billing code 3195–01–P

# Presidential Documents

**Presidential Determination No. 99–33 of August 12, 1999**

## Emergency Presidential Determination on Additional FY 99 Refugee Admissions Numbers Pursuant to Section 207(b) of the Immigration and Nationality Act

**Memorandum for the Secretary of State**

In accordance with section 207(b) of the Immigration and Nationality Act (the ''Act'') (8 U.S.C. 1157(b)), and after appropriate consultations with the Congress, I hereby determine that an unforeseen refugee emergency exists in Europe, and that the admission to the United States of Kosovar refugees in response to this emergency is justified by grave humanitarian concerns and is in the national interest. The admission of these refugees cannot be accomplished under the worldwide refugee admissions ceiling of 78,000 for Fiscal Year 1999, as authorized in Presidential Determination 98–39 of September 30, 1998, and an increase to 91,000 is warranted. The revised regional allocations are as follows:

| | |
|---|---|
| Africa | 12,000 |
| East Asia | 9,000 |
| Europe | 61,000 |
| Latin America/Caribbean | 3,000 |
| Near East/South Asia | 4,000 |
| Unallocated | 2,000 |

The provisions of Presidential Determination 98–39 are retained, except to the extent superseded by this determination.

You are hereby directed to report this determination to the Congress immediately and to publish it in the **Federal Register**.

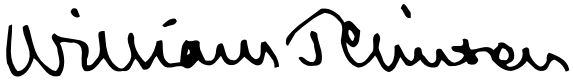

THE WHITE HOUSE,
*Washington, August 12, 1999.*

[FR Doc. 99–22779
Filed 8–30–99; 8:45 am]
Billing code 4710–10–M

# Presidential Documents

**Presidential Determination No. 99–34 of August 13, 1999**

## Determination to Authorize the Furnishing of Nonlethal Emergency Military Assistance to the States Participating in the Economic Community of West African States' Monitoring Group (ECOMOG) Under Section 506(a)(l) of the Foreign Assistance Act of 1961, as Amended

**Memorandum for the Secretary of State [and] the Secretary of Defense**

Pursuant to the authority vested in me by section 506(a)(l) of the Foreign Assistance Act of 1961, as amended, 22 U.S.C. 2318(a)(1) (the ''Act''), I hereby determine that:

(1) an unforeseen emergency exists that requires immediate military assistance to states currently participating in, and to states that may in the future participate in, ECOMOG; and

(2) the emergency requirement cannot be met under the authority of the Arms Export Control Act or any other law except section 506(a)(1) of the Act.

Therefore, I direct the drawdown from the inventory and resources of the Department of Defense of an aggregate value not to exceed $3 million in defense articles from the stocks of the Department of Defense, defense services of the Department of Defense, and military education and training, to provide drawdown assistance to the states currently participating (Nigeria, Ghana, Sierra Leone, Mali, and Guinea), and to those states that in the future may participate, in ECOMOG to enhance ECOMOG's capabilities to participate in efforts to restore peace and security in Sierra Leone.

The Secretary of State is authorized and directed to report this determination to the Congress and to arrange for its publication in the **Federal Register**.

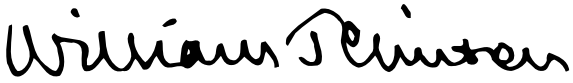

THE WHITE HOUSE,
*Washington, August 13, 1999.*

[FR Doc. 99–22780
Filed 8–30–99; 8:45 am]
Billing code 4710–10–M

# Presidential Documents

**Memorandum of August 17, 1999**

## Delegation of Responsibilities Under the International Religious Freedom Act of 1998

**Memorandum for the Secretary of State**

By the authority vested in me by the Constitution and the laws of the United States of America, including section 301 of title 3 of the United States Code, I hereby delegate to the Secretary of State the functions and authorities vested in the President by title IV, subtitle I (sections 401–409) of the International Religious Freedom Act of 1998 (Public Law 105–292) (the ''Act'').

Any reference in this memorandum to any act shall be deemed to be a reference to such act as amended from time to time.

The functions delegated by this memorandum may be delegated within the Department of State.

You are authorized and directed to publish this memorandum in the **Federal Register**.

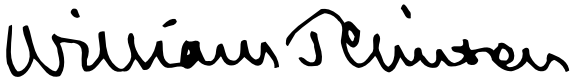

THE WHITE HOUSE,
*Washington, August 17, 1999.*

[FR Doc. 99–22781
Filed 8–30–99; 8:45 am]
Billing code 4710–10–M

# Presidential Documents

**Presidential Determination No. 99–35 of August 17, 1999**

## Determination to Authorize the Furnishing of Commodities and Services for the United Nations War Crimes Tribunal Established With Regard to the Former Yugoslavia

**Memorandum for the Secretary of State [and] the Secretary of Defense**

Pursuant to the authority vested in me as President of the United States, including section 554 of the Foreign Operations, Export Financing, and Related Programs Appropriations Act, 1999, as enacted in Public Law 105–277, I hereby:

(a) determine that a drawdown of up to $5 million of commodities and services from the inventory and resources of the Department of Defense will contribute to a just resolution of charges regarding genocide and other violations of international humanitarian law; and

(b) direct the drawdown, pursuant to section 552(c) of the Foreign Assistance Act of 1961, as amended, 22 U.S.C. 2348a (the ''Act''), of up to $5 million in commodities and services from the inventory and resources of the Department of Defense for the United Nations War Crimes Tribunal established with regard to the former Yugoslavia by the United Nations Security Council, without regard to the ceiling limitation contained in section 552(c)(2) of the Act.

The Secretary of State is authorized and directed to report this determination to the Congress and to arrange for its publication in the **Federal Register**.

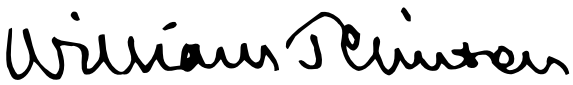

THE WHITE HOUSE,
*Washington, August 17, 1999.*

[FR Doc. 99–22782
Filed 8–30–99; 8:45 am]
Billing code 4710–10–M

# Rules and Regulations

Federal Register
Vol. 64, No. 168
Tuesday, August 31, 1999

This section of the FEDERAL REGISTER contains regulatory documents having general applicability and legal effect, most of which are keyed to and codified in the Code of Federal Regulations, which is published under 50 titles pursuant to 44 U.S.C. 1510.

The Code of Federal Regulations is sold by the Superintendent of Documents. Prices of new books are listed in the first FEDERAL REGISTER issue of each week.

## DEPARTMENT OF AGRICULTURE

### Agricultural Marketing Service

### 7 CFR Parts 57 and 75

### Inspection of Eggs and Regulations for Inspection and Certification of Quality of Agricultural and Vegetable Seeds

*CFR Correction*

In Title 7 of the Code of Federal Regulations, parts 53 to 209, revised as of Jan. 1, 1999, page 80, § 57.760 is corrected by reinstating text missing from the end of the section, the source note, and the effective date; and page 193, which is duplicate text, is removed. The reinstated text follows:

**§ 57.760 Inspection of egg handlers.**

* * * any place of business, plant, or transport vehicle subject to inspection under the provisions of the Act.

[63 FR 45675, Aug. 27, 1998. Redesignated at 63 FR 69970, Dec. 17, 1998]

Effective Date Note: At 63 FR 69970, Dec. 17, 1998, § 57.760 was redesignated from § 59.760. At 63 FR 45675, Aug. 27, 1998, § 59.760 was revised, effective Aug. 27, 1999. For the convenience of the user, the superseded text is set forth as follows:

[FR Doc. 99–55527 Filed 8–30–99; 8:45am]

BILLING CODE 1505–01–D

## DEPARTMENT OF AGRICULTURE

### Agricultural Marketing Service

### 7 CFR Part 906

**[Docket No. FV99–906–3 IFR]**

### Oranges and Grapefruit Grown in Lower Rio Grande Valley in Texas; Changes to Pack Requirements

**AGENCY:** Agricultural Marketing Service, USDA.

**ACTION:** Interim final rule with request for comments.

**SUMMARY:** This rule changes the pack requirements currently prescribed under the marketing order covering oranges and grapefruit grown in the Lower Rio Grande Valley in Texas. The marketing order regulates the handling of such fruit and is administered locally by the Texas Valley Citrus Committee (Committee). This rule changes the orange and grapefruit pack sizes so that each pack size will reflect the actual number of fruit in a 7/10 bushel carton. It also more closely aligns the pack sizes for Texas oranges with the pack sizes used by shippers of California oranges. These changes will enable Texas handlers to compete more effectively in the marketplace. The rule also makes conforming changes to the pack size references in the minimum size regulations to keep the minimum size requirements for orange and grapefruit the same as currently specified.

**DATES:** Effective September 1, 1999; comments received by November 1, 1999 will be considered prior to issuance of a final rule.

**ADDRESSES:** Interested persons are invited to submit written comments concerning this rule. Comments must be sent to the Docket Clerk, Fruit and Vegetable Programs, AMS, USDA, room 2525–S, P.O. Box 96456, Washington, DC 20090–6456; Fax: (202) 720–5698; or E-mail: moab.docketclerk@usda.gov. All comments should reference the docket number and the date and page number of this issue of the **Federal Register** and will be made available for public inspection in the Office of the Docket Clerk during regular business hours.

**FOR FURTHER INFORMATION CONTACT:** Belinda G. Garza, Regional Manager, McAllen Marketing Field Office, Marketing Order Administration Branch, Fruit and Vegetable Programs, AMS, USDA, 1313 E. Hackberry, McAllen, Texas 78501; telephone: (956) 682–2833, Fax: (956) 682–5942; or George Kelhart, Technical Advisor, Marketing Order Administration Branch, Fruit and Vegetable Programs, AMS, USDA, room 2525–S, P.O. Box 96456, Washington, DC 20090–6456; telephone: (202) 720–2491, Fax: (202) 720–5698. Small businesses may request information on complying with this regulation, or obtain a guide on complying with fruit, vegetable, and specialty crop marketing agreements and orders by contacting Jay Guerber, Marketing Order Administration Branch, Fruit and Vegetable Programs, AMS, USDA, P.O. Box 96456, room 2525–S, Washington, DC 20090–6456; telephone (202) 720–2491, Fax: (202) 720–5698, or E-mail: Jay.Guerber@usda.gov. You may view the marketing agreement and order small business compliance guide at the following web site: http://www.ams.usda.gov/fv/moab.html.

**SUPPLEMENTARY INFORMATION:** This rule is issued under Marketing Agreement and Order No. 906, as amended (7 CFR part 906), regulating the handling of oranges and grapefruit grown in the Lower Rio Grande Valley in Texas, hereinafter referred to as the ''order.'' The marketing agreement and order are effective under the Agricultural Marketing Agreement Act of 1937, as amended (7 U.S.C. 601–674), hereinafter referred to as the ''Act.''

The Department of Agriculture (Department) is issuing this rule in conformance with Executive Order 12866.

This rule has been reviewed under Executive Order 12988, Civil Justice Reform. This rule is not intended to have retroactive effect. This rule will not preempt any State or local laws, regulations, or policies, unless they present an irreconcilable conflict with this rule.

The Act provides that administrative proceedings must be exhausted before parties may file suit in court. Under section 608c(15)(A) of the Act, any handler subject to an order may file with the Secretary a petition stating that the order, any provision of the order, or any obligation imposed in connection with the order is not in accordance with law and request a modification of the order or to be exempted therefrom. A handler is afforded the opportunity for a hearing on the petition. After the hearing the Secretary would rule on the petition. The Act provides that the district court of the United States in any district in which the handler is an inhabitant, or has his or her principal place of business, has jurisdiction to review the Secretary's ruling on the petition, provided an action is filed not later than 20 days after the date of the entry of the ruling.

This rule changes the current orange and grapefruit pack sizes from a 1⅖ bushel box basis to pack sizes based upon the actual number of fruit packed in a 7/10 bushel carton. The orange pack

sizes also will be more closely aligned to the pack sizes and size tolerances used by California orange shippers. The rule also makes conforming changes to the pack size references in the minimum size regulations for oranges and grapefruit to keep the minimum size requirements the same as currently specified. This rule will enable handlers to compete more effectively in the marketplace.

The Committee's Grade and Size Subcommittee met on April 20 and 29 and May 4, 1999, to discuss possible changes to the order's pack requirements. At a meeting on May 13, 1999, the Subcommittee recommended and the Committee unanimously approved changes to the regulations. On July 1, 1999, the Committee met again and unanimously recommended the following changes to the orange and grapefruit pack and conforming changes to the size regulations.

(1) Eliminate two pack size tables for different orange varieties, change the pack sizes to a 7/10 bushel carton basis for all orange varieties to be consistent with California pack sizes, and add a pack size 64 to the California sizes. The changes will result in one pack size chart ranging from pack size 24 to 138 with minimum and maximum diameter size ranges for all oranges, and, when packed in 7/10 bushel containers, the pack sizes will reflect the actual number of fruit in the container;

(2) Replace the 1 2/5 bushel box references in the regulations with 7/10 bushel carton references;

(3) Change current grapefruit pack sizes based on a 1 2/5 bushel box to pack sizes based upon the actual number of fruit packed in a 7/10 bushel carton; and

(4) Make conforming changes to the size requirements in § 906.365 based on the above changes to keep the minimum size requirements for oranges and grapefruit the same as currently specified.

Under the terms of the order, fresh market shipments of oranges and grapefruit grown in the Lower Rio Grande Valley in Texas are required to be inspected and meet grade, size, container, and pack requirements. Section 906.40 authorizes the issuance of pack regulations. Section 906.340(a)(2) of the order's rules and regulations outlines pack requirements for fresh shipments of Texas oranges and grapefruit.

**Changes to the Pack Requirements for Oranges**

Section 906.340(a)(2)(i) specifies pack requirements for oranges. It includes two tables specifying pack sizes in terms of minimum and maximum diameters for each specified pack size, for different varieties of oranges. Packing tolerances for off-size are specified, as are standard pack requirements.

Currently, oranges are divided into two categories for the purpose of pack regulations: (1) Navel, Valencia, and similar late-type oranges, and (2) all other varieties of oranges. For all types of oranges, 13 pack sizes ranging from pack size 46 (the largest fruit) to pack size 324 (the smallest fruit) are specified. The minimum diameters for Navel, Valencia, and similar late-type oranges for each of the pack sizes are 2/16 inch smaller than those specified for all other oranges, while the maximum diameters for all varieties of oranges in the 13 pack sizes are the same. All oranges, however, must at least be pack size 288, except that the minimum diameter limit is 2 6/16 inches.

The current orange pack sizes and minimum and maximum diameters are shown in the following tables:

**Table 1 (Section 906.304(a)(2)(i)(a))**

TABLE 1.—ORANGES, EXCEPT NAVELS, VALENCIAS, & SIMILAR LATE-TYPE ORANGES

[1 2/5 Bushel Box]

| Pack size | Diameter in inches | |
|---|---|---|
| | Minimum | Maximum |
| 46's | 4 5/16 | 5 |
| 54's or 56's | 4 2/16 | 4 12/16 |
| 64's | 3 15/16 | 4 8/16 |
| 70's or 72's | 3 13/16 | 4 5/16 |
| 80's | 3 10/16 | 4 2/16 |
| 100's | 3 7/16 | 3 13/16 |
| 112's | 3 5/16 | 3 11/16 |
| 125's | 3 3/16 | 3 9/16 |
| 163's | 2 15/16 | 3 5/16 |
| 200's | 2 11/16 | 3 1/16 |
| 252's | 2 7/16 | 2 12/16 |
| 288's | 2 4/16 | 2 9/16 |
| 324's | 2 3/16 | 2 8/16 |

**Table II (Section 906.340(a)(2)(i)(c))**

TABLE II.—NAVELS, VALENCIA & SIMILAR LATE-TYPE ORANGES

[1 2/5 Bushel Box]

| Pack size | Diameter in inches | |
|---|---|---|
| | Minimum | Maximum |
| 46 | 4 3/16 | 5 |
| 54 | 4 | 4 12/16 |
| 64 | 3 13/16 | 4 8/16 |
| 70 or 72 | 3 11/16 | 4 5/16 |
| 80 | 3 8/16 | 4 2/16 |

TABLE II.—NAVELS, VALENCIA & SIMILAR LATE-TYPE ORANGES—Continued

[1 2/5 Bushel Box]

| Pack size | Diameter in inches | |
|---|---|---|
| | Minimum | Maximum |
| 100 | 3 5/16 | 3 13/16 |
| 112 | 3 3/16 | 3 11/16 |
| 125 | 3 1/16 | 3 9/16 |
| 163 | 2 13/16 | 3 5/16 |
| 200 | 2 9/16 | 3 1/16 |
| 252 | 2 5/16 | 2 13/16 |
| 288 | 2 2/16 | 2 9/16 |

All oranges must be at least Pack Size 288, except that the minimum diameter limit for Pack Size 288 oranges in any lot shall be 2 6/16 inches.

The Committee recommended changing the orange pack sizes to the pack sizes used by the California citrus industry. A study by the Committee indicates that approximately 39 percent of Texas oranges are sold in Texas, and about 36 percent in California. Almost 90 percent of Texas oranges are marketed west of the Mississippi River. California dominates the western domestic orange market with fruit available on a year-round basis. Texas, on the other hand, is a relatively small producer of oranges with a marketing season from late September through May. Presently, the pack sizes for California oranges are different from those for Texas oranges. Furthermore, Texas presently has the two previously mentioned orange size tables—one for Navels, Valencias, and similar late-type oranges, and another for all other varieties.

Since California dominates the orange market, produce buyers are much more familiar with California orange pack sizes than pack sizes used by the Texas citrus industry. Buyers' computers tend to have California pack sizes listed, but not Texas. This puts handlers of Texas oranges at a competitive disadvantage. Further, Texas does not currently pack a size 138 orange, because this size is not a specified pack size. The closest Texas sizes are 126 and 144. As a result, the Texas orange industry cannot take advantage of size 138 business.

Moreover, retailers, wholesalers, food service distributors, and brokers are much more familiar with California orange pack sizes than Texas orange pack sizes because California ships a much larger volume and is present in the marketplace year-round. Having pack sizes different from California's is a marketing problem that affects all producers and handlers and could cause the Texas industry to lose fresh orange sales. The Committee believes that the Texas pack sizes need to be more closely aligned with the California pack sizes. In addition to the pack sizes used by the California industry, the Committee recommended a pack size 64, presently a very popular size for the Texas industry, ranging from a minimum diameter of 2 11/16 inches to a maximum of 3 10/16 inches.

The Committee unanimously recommended orange pack sizes ranging from pack size 24 to 138 with minimum and maximum diameters based on the 7/10 bushel carton and the actual number of fruit in that size carton, as shown in the following table:

ORANGES

[7/10 bushel carton]

| Pack size/Number of oranges | Diameter in inches | |
|---|---|---|
| | Minimum | Maximum |
| 24 | 3 12/16 | 5 1/16 |
| 32 | 3 6/16 | 4 9/16 |
| 36 | 3 4/16 | 4 6/16 |
| 40 | 3 2/16 | 4 4/16 |
| 48 | 2 15/16 | 4 |
| 56 | 2 13/16 | 3 13/16 |
| 64 | 2 11/16 | 3 10/16 |
| 72 | 2 9/16 | 3 8/16 |
| 88 | 2 8/16 | 3 4/16 |
| 113 | 2 7/16 | 3 |
| 138 | 2 6/16 | 2 12/16 |

Currently, Texas has minimum and maximum orange size diameters in inches and fractions of an inch for each pack size based on the 1 2/5 bushel box. The Committee recommended changing the minimum and maximum diameter size ranges for the proposed pack sizes to a 7/10 bushel carton basis as shown in the foregoing table because 1 2/5 bushel boxes are no longer used by the industry.

Adopting the California orange pack sizes for all varieties of oranges will eliminate the two separate pack size tables currently in the orange pack regulations. Separate tables for different varieties of oranges were established to allow for varietal size differences. Some varieties tend to be round and others slightly oblong, and older mechanical fruit sizing equipment could not accurately size the differently shaped fruit. Present day mechanical fruit sizers, however, accurately size all varieties of oranges regardless of shape, and two separate pack size tables for different orange varieties are no longer necessary.

Language also is being added to clarify that if 7/10 bushel containers of oranges are marked, the count of fruit in each container shall not be less than the count marked on the container, but may exceed the count marked on the container by not more than 8 percent. The 8 percent tolerance is used in California. When packed in marked containers other than 7/10 bushel, the pack sizes applicable to 7/10 bushel containers shall also apply to such containers.

### Replace References to the 1 2/5 Bushel Box With a 7/10 Bushel Carton

As discussed earlier, the current Texas orange and grapefruit regulations refer to a 1 2/5 bushel box. The 1 2/5 bushel box is a carryover from past years when fruit was packed in a wooden ''Bruce'' box, which is twice the size of the common 7/10 bushel carton presently used in commercial business. The Committee recommended changing all references to the 1 2/5 bushel box to a 7/10 bushel carton. References to the 1 2/5 bushel box and associated fruit pack sizes based on that container are confusing to the industry. All weekly Committee utilization reports, annual reports, and other documents currently reference the 7/10 bushel carton equivalent. With the elimination of the 1 2/5 bushel box, the orange pack sizes would be in accordance with the count in a 7/10 bushel carton.

The 7/10 bushel carton equivalent and fruit count per carton is now the accepted unit of measure for oranges and grapefruit within the Texas industry. Handlers actually currently pack as to count of fruit in the box. Eliminating all references to the 1 2/5 bushel box and related pack sizes will minimize confusion among all producers and handlers.

### Changes to the Pack Requirements for Grapefruit

Section 906.340(a)(2)(ii) specifies pack requirements for grapefruit based upon the United States Standards for Grades of Grapefruit (Texas and States other than Florida, California, and Arizona), hereinafter referred to as the ''grapefruit standards'', with some exceptions. Grapefruit are currently required to be packed within the diameter limits specified for the various pack sizes defined in 7 CFR 51.630(c) of the grapefruit standards, based on a 1 2/5 bushel box. Exceptions are that the minimum diameter limit for pack size 96 grapefruit is 3 9/16 inches, and for pack size 112 grapefruit, the minimum diameter is 3 5/16 inches. The current standard pack and standard sizing requirements, and packing tolerances will remain unchanged.

The grapefruit standards define eight pack sizes. The smallest is size 125/126, which ranges from a minimum of 3 inches to a maximum of 3 8/16 inches in diameter. The largest is size 46 which ranges from 4 5/16 to 5 inches in diameter. The Texas grapefruit pack regulations include a size 36 grapefruit, which ranges from 4 15/16 to 5 9/16 inches in diameter. This pack size is not in the grapefruit standards. The minimum diameters for pack sizes 96 and 112 are different from those specified in the grapefruit standards. The grapefruit standards specify 3 6/16 inches and 3 2/16 inches, and the order requirements specify 3 9/16 inches and 3 5/16 inches, respectively. The maximum diameters are the same.

The Committee recommended revising the grapefruit pack sizes based on a 7/10 bushel carton as shown in the following table rather than the 1 2/5 bushel box, which is obsolete and confusing. As mentioned earlier, the Texas citrus industry for many years has used the 7/10 bushel carton as its standard shipping container. Presently, any reference to a 1 2/5 bushel of fruit has to be converted to 7/10 bushel equivalents. With the elimination of the 1 2/5 bushel box, grapefruit pack sizes will reference the number of grapefruit that will pack in a 7/10 bushel carton.

GRAPEFRUIT

[7/10 bushel carton]

| Pack size/ Number of grapefruit | Diameter in inches | |
|---|---|---|
| | Minimum | Maximum |
| 18(36) | 4 15/16 | 5 9/16 |
| 23(46) | 4 5/16 | 5 |
| 27(54/56) | 4 2/16 | 4 12/16 |
| 32(64) | 3 15/16 | 4 8/16 |
| 36(70/72) | 3 13/16 | 4 5/16 |
| 40(80) | 3 10/16 | 4 2/16 |
| 48(96) | 3 9/16 | 3 14/16 |
| 56(112/113) | 3 5/16 | 3 10/16 |

(Numbers in parentheses represent current pack sizes.) Minimum and maximum diameter ranges for the new pack sizes (not in parentheses) are the same as currently specified.

Language also is being added to clarify that if 7/10 bushel containers of grapefruit are marked, the count of fruit in the container shall not be less than the count marked on the container, but may exceed the count marked on the container by not more than 8 percent. The 8 percent tolerance is used in California. When packed in marked containers other than 7/10 bushel, the pack sizes applicable to 7/10 bushel containers shall also apply to such containers.

### Conforming Changes to the Size Regulations

Changing the orange pack sizes and minimum and maximum diameter size ranges requires conforming changes to the size regulations for oranges in § 906.365(a)(2). The minimum size which may be packed will change from pack size 288 to the new pack size 138, but the minimum size permitted will continue to be a 2 6/16 inch minimum diameter.

Changing the grapefruit pack sizes from a 1 2/5 bushel box basis to pack sizes based on the 7/10 bushel carton also requires conforming changes to the grapefruit size regulations in § 906.365(a)(4). The minimum pack size will change from pack size 96 to pack size 48, but the minimum diameter permitted to be shipped will remain 3 9/16 inches. A reference to current pack size 112 in § 906.365(a) will change to pack size 56. That paragraph provides that pack size 56 grapefruit (with a minimum diameter of 3 5/16 inches) may be shipped if the fruit grades at least U.S. No. 1.

**Initial Regulatory Flexibility Analysis**

Pursuant to requirements set forth in the Regulatory Flexibility Act (RFA), the Agricultural Marketing Service (AMS) has considered the economic impact of this action on small entities. Accordingly, AMS has prepared this initial regulatory flexibility analysis.

The purpose of the RFA is to fit regulatory actions to the scale of business subject to such actions in order that small businesses will not be unduly or disproportionately burdened. Marketing orders issued pursuant to the Act, and the rules issued thereunder, are unique in that they are brought about through group action of essentially small entities acting on their own behalf. Thus, both statutes have small entity orientation and compatibility.

There are approximately 315 producers of oranges and grapefruit in the production area and 16 handlers subject to regulation under the marketing order. Small agricultural producers have been defined by the Small Business Administration (SBA) (13 CFR 121.601) as those having annual receipts less than $500,000 and small agricultural service firms are defined as those whose annual receipts are less than $5,000,000. The majority of Texas orange and grapefruit producers and handlers may be classified as small entities.

Last year, 5 of the 16 handlers (31 percent) each shipped over 625,000 7/10 bushel cartons of oranges and grapefruit. Using an average f.o.b. price of $8.00 per carton, these handlers could be considered large businesses by the SBA, and the remaining 11 handlers (69 percent) could be considered small businesses. Of the approximately 315 producers within the production area, few have sufficient acreage to generate sales in excess of $500,000; therefore, a majority of producers of Texas oranges and grapefruit may be classified as small entities.

Many producers are still recovering from the 1983 and 1989 devastating freezes that virtually destroyed the Texas citrus industry. Most trees in the production area were planted within the past ten years and have not yet reached full maturity. As a result, yields are still somewhat low and the profit to the producers is marginal. The 1998–99 season grapefruit and orange production levels were 59 percent and 36 percent of the pre-1983 freeze levels.

This rule changes the orange and grapefruit pack sizes currently prescribed under the order to pack sizes based upon the actual number of fruit packed in a 7/10 bushel carton. It also more closely aligns the pack sizes for Texas oranges to those used by shippers of oranges grown in California. Conforming changes are also made to the pack size references in the size regulations for oranges and grapefruit to the minimum sizes permitted to be shipped the same as currently specified. This rule will enable handlers to compete more effectively in the marketplace.

The Grade and Size Subcommittee met on April 20 and 29 and May 4, 1999, to discuss possible changes to the order's pack requirements. At a meeting on May 13, 1999, the Subcommittee recommended and the Committee unanimously approved changes to the regulations. On July 1, 1999, the Committee met again and unanimously recommended the following changes to the orange and grapefruit pack and conforming changes to the size regulations:

(1) Eliminate two separate pack size tables for different orange varieties and establish one table for all orange varieties, change the pack sizes to a 7/10 bushel carton basis for all orange varieties consistent with California pack sizes (the Texas pack sizes currently are based on 1 2/5 bushel boxes), and add a pack size 64 not specified in the California sizes. The new pack size table includes pack sizes for all orange varieties ranging from pack size 24 to 138, and each pack size has minimum and maximum diameter ranges; (2) Change current grapefruit pack sizes based on a 1 2/5 bushel box to pack sizes based upon the actual number of fruit packed in the 7/10 bushel carton; and (3) Make conforming changes to the size regulations based on the above recommendations.

Under the terms of the order, fresh market shipments of oranges and grapefruit grown in the Lower Rio Grande Valley in Texas are required to be inspected and meet grade, size, container, and pack requirements. Section 906.40 authorizes the issuance of pack regulations. Section 906.340(a)(2) of the order's rules and regulations outlines pack requirements for fresh shipments of Texas oranges and grapefruit. Size requirements are specified under § 906.365.

**Changes to the Pack Requirements for Oranges**

Section 906.340(a)(2) specifies pack requirements for oranges and includes two tables with pack sizes and minimum and maximum diameter size ranges for different varieties of oranges. These requirements provide, among other things, that oranges be packed in accordance with certain minimum and maximum diameters.

Currently, oranges are divided into two categories for the purpose of pack regulations: (1) Navel, Valencia and similar late-type oranges, and (2) all other varieties of oranges. All types of oranges must be packed in accordance with 13 pack sizes. The minimum diameters for Navel, Valencia, and similar late-type oranges for each of the pack sizes are 2/16 inch smaller than those specified for all other oranges, while the maximum diameters for all varieties of oranges in the 13 pack sizes are the same. The minimum diameter, however, for all oranges is pack size 288 with a minimum diameter limit of 2 6/16 inches.

The current orange pack sizes and minimum and maximum diameters are shown in the following tables:

**Table I (Section 906.304(a)(2)(i)(a))**

TABLE 1.—ALL ORANGES, EXCEPT NAVELS, VALENCIAS, AND SIMILAR LATE-TYPE ORANGES

[1 2/5 Bushel Box]

| Pack size | Diameter in inches | |
|---|---|---|
| | Minimum | Maximum |
| 46's | 4 5/16 | 5 |
| 54's or 56's | 4 2/16 | 4 12/16 |
| 64's | 3 15/16 | 4 8/16 |
| 70's or 72's | 3 13/16 | 4 5/16 |
| 80's | 3 10/16 | 4 2/16 |
| 100's | 3 7/16 | 3 13/16 |

TABLE 1.—ALL ORANGES, EXCEPT NAVELS, VALENCIAS, AND SIMILAR LATE-TYPE ORANGES—Continued

[1 2/5 Bushel Box]

| Pack size | Diameter in inches | |
|---|---|---|
| | Minimum | Maximum |
| 112's | 3 5/16 | 3 11/16 |
| 125's | 3 3/16 | 3 9/16 |
| 163's | 2 15/16 | 3 5/16 |
| 200's | 2 11/16 | 3 1/16 |
| 252's | 2 7/16 | 2 12/16 |
| 288's | 2 4/16 | 2 9/16 |
| 324's | 2 3/16 | 2 8/16 |

**Table II (Section 906.340(a)(2)(i)(c))**

TABLE II.—NAVELS, VALENCIA & SIMILAR LATE-TYPE ORANGES

[2/5 Bushel Box]

| Pack size | Diameter in inches | |
|---|---|---|
| | Minimum | Maximum |
| 46 | 4 3/16 | 5 |
| 54 | 4 | 4 12/16 |
| 64 | 3 11/16 | 4 8/16 |
| 70 or 72 | 3 11/16 | 4 5/16 |
| 80 | 3 8/16 | 4 2/16 |
| 100 | 3 5/16 | 3 13/16 |
| 112 | 3 3/16 | 3 11/16 |
| 125 | 3 1/16 | 3 9/16 |
| 163 | 2 13/16 | 3 5/16 |
| 200 | 2 9/16 | 3 1/16 |
| 252 | 2 5/16 | 2 12/16 |
| 288 | 2 2/16 | 2 9/16 |

All oranges must be at least Pack Size 288, except that the minimum diameter limit for Pack Size 288 oranges in any lot shall be 2 6/16 inches.

The Committee recommended changing the orange pack sizes to the pack sizes used by the California citrus industry. A study by the Committee indicates that approximately 39 percent of Texas oranges are sold in Texas, and about 36 percent in California. Almost 90 percent is marketed west of the Mississippi River. California dominates the western domestic orange market with fruit available on a year-round basis. Texas, on the other hand, is a relatively small producer of oranges with a marketing season from late September through May. Presently, oranges from California are sized differently from oranges available from Texas. Furthermore, as mentioned before, Texas has two orange size tables—one for Navels, Valencias, and similar late-type oranges, and another for all other varieties.

Since California dominates the orange market, produce buyers are much more familiar with California orange pack sizes than pack sizes used by the Texas citrus industry. Buyers' computers tend to have California pack sizes listed, but not Texas'. This puts Texas oranges at a competitive disadvantage. Further, Texas does not currently pack a size 138 orange. The closest Texas sizes are 126 and 144. As a result, the Texas orange industry cannot supply buyers interested in purchasing size 138.

Retailers, wholesalers, food service distributors, and brokers are much more familiar with California orange pack sizes than Texas orange pack sizes because California ships a much larger volume and is present in the marketplace year-round. Having pack sizes different from California's is a marketing problem that affects all producers and handlers and could cause the Texas industry to lose fresh orange sales. The Committee believes that the pack sizes for Texas should be similar to those used by California shippers. In addition to the pack sizes used by the California industry, the Committee recommended a pack size 64, presently a very popular size for the Texas industry, ranging from a minimum diameter of 2 11/16 inches to a maximum of 3 10/16 inches.

The Committee unanimously recommended orange pack sizes ranging from pack size 24 to 138 with minimum and maximum diameters based on the 7/10 bushel carton, which will refer to the actual number of fruit in the carton, as shown in the following table:

ORANGES

[7/10 bushel carton]

| Pack size/Number of grapefruit | (Diameter in Inches) | |
|---|---|---|
| | Minimum | Maximum |
| 24 | 3 12/16 | 5 1/16 |
| 32 | 3 6/16 | 4 9/16 |

ORANGES—Continued

[7/10 bushel carton]

| Pack size/Number of grapefruit | (Diameter in Inches) | |
|---|---|---|
| | Minimum | Maximum |
| 36 | 3 4/16 | 4 6/16 |
| 40 | 3 2/16 | 4 4/16 |
| 48 | 2 15/16 | 4 |
| 56 | 2 13/16 | 3 13/16 |
| 64 | 2 11/16 | 3 10/16 |
| 72 | 2 9/16 | 3 8/16 |
| 88 | 2 8/16 | 3 4/16 |
| 113 | 2 7/16 | 3 |
| 138 | 2 6/16 | 2 12/16 |

Currently, Texas has minimum and maximum orange diameter size ranges in inches and fractions of an inch for each pack size. The Committee recommended changing the minimum and maximum diameters for the pack sizes to a 7/10 bushel carton basis as shown in the foregoing table.

Adopting the California orange pack sizes for all varieties of oranges would eliminate the two separate pack size tables currently in the orange pack regulations. The separate tables for different varieties of oranges were established to allow for varietal size differences. Some varieties tend to be round and others slightly oblong, which caused problems with older mechanical sizing equipment. Present day mechanical fruit sizing equipment, however, accurately sizes all varieties of oranges and two separate pack size tables for different orange varieties are no longer necessary.

For purposes of clarity, language is being added under Table I indicating that if 7/10 bushel containers of oranges are marked, the count of fruit in each container shall not be less than the count marked on the container, but may exceed the count marked on the container by not more than 8 percent. The 8 percent tolerance is used in California. When packed in marked containers other than 7/10 bushel, the pack sizes applicable to 7/10 bushel containers shall also apply to such containers.

**Replace References to the 1 2/5 Bushel Box with a 7/10 Bushel Carton**

The current Texas orange and grapefruit pack size regulations refer to a 1 2/5 bushel box. The 1 2/5 bushel box is a carryover from past years when fruit was packed in a wooden ''Bruce'' box, which is twice the size of the common 7/10 bushel carton presently used in commercial business. The Committee recommended changing all references to the 1 2/5 bushel box to a 7/10 bushel carton. References to the 1 2/5 bushel box and associated fruit pack sizes based on that container are confusing to the industry. All weekly Committee utilization reports, annual reports, and other documents currently reference the 7/10 bushel carton or equivalent. With the elimination of the 1 2/5 bushel box, the orange pack sizes would be in accordance with the count in a 7/10 bushel carton.

The 7/10 bushel carton and fruit count per carton is now the accepted standard for oranges and grapefruit within the Texas industry. Handlers currently pack as to the count of fruit in the box. Eliminating all references to the 1 2/5 bushel box and related pack sizes will minimize confusion among all producers and handlers.

**Changes to the Pack Requirements for Grapefruit**

Section 906.340(a)(2) also provides pack requirements for grapefruit based upon the United States Standards for Grades of Grapefruit (Texas and States other than Florida, California, and Arizona) with some exceptions. Grapefruit are currently required to be packed within the diameter limits specified for the various pack sizes defined in 7 CFR 51.630(c) of the United States Standards for Grades of Grapefruit (Texas and States other than Florida, California, and Arizona), hereinafter referred to as the grapefruit standards, based on a 1 2/5 bushel box. Exceptions are that the minimum diameter for pack size 96 grapefruit is 3 9/16 inches, and for pack size 112 grapefruit, the minimum diameter is 3 5/16 inches. The current standard pack and standard sizing requirements, and packing tolerances will remain unchanged.

The grapefruit standards define eight pack sizes. The smallest is size 125/126, which ranges from a minimum of 3 inches to a maximum of 3 8/16 inches in diameter. The largest is size 46 which ranges from 4 5/16 to 5 inches in diameter. The Texas grapefruit pack regulations also include a size 36 grapefruit, which ranges from 4 15/16 to 5 9/16 inches in diameter. The minimum diameters for pack sizes 96 and 112 have been modified from 3 6/16 inches and 3 2/16 inches as specified in the grapefruit standards to 3 9/16 and 3 5/16 inches, respectively.

The Committee recommended revising the grapefruit pack sizes based on a 7/10 bushel carton, as shown in the following table, rather than the 1 2/5 bushel box, because the latter basis is obsolete and confusing. The Texas citrus industry for many years has used the 7/10 bushel carton as the standard. Presently, any reference to a 1 2/5 bushel of fruit has to be converted to 7/10 bushel equivalents. With the elimination of the 1 2/5 bushel box, grapefruit pack sizes will reference the number of grapefruit that will pack in a 7/10 bushel carton.

GRAPEFRUIT

[7/10 bushel carton]

| Pack size/Number of grapefruit | Diameter in inches | |
|---|---|---|
| | Minimum | Maximum |
| 18(36) | 4 15/16 | 5 9/16 |

GRAPEFRUIT—Continued

[7/10 bushel carton]

| Pack size/Number of grapefruit | Diameter in inches | |
|---|---|---|
| | Minimum | Maximum |
| 23(46) | 4 5/16 | 5 |
| 27(54/56) | 4 2/16 | 4 12/16 |
| 32(64) | 3 15/16 | 4 8/16 |
| 36(70/72) | 3 13/16 | 4 5/16 |
| 40(80) | 3 10/16 | 4 2/16 |
| 48(96) | 3 9/16 | 3 14/16 |
| 56(112/113) | 3 5/16 | 3 10/16 |

(Numbers in parentheses represent current pack sizes.)

Minimum and maximum diameter size ranges for the new pack sizes will remain the same as currently specified.

For purposes of clarity, language is being added after Table II specifying that if 7/10 bushel containers of grapefruit are marked, the count of fruit in the container shall not be less than the count marked on the container, but may exceed the count marked on the container by not more than 8 percent. The 8 percent tolerance is used in California. When packed in marked containers other than 7/10 bushel, the pack sizes applicable to 7/10 bushel containers shall also apply to such containers.

**Conforming Changes to the Size Regulations**

Changing the orange pack sizes and minimum and maximum diameter size ranges requires conforming changes to the size regulations for oranges in 906.365(a)(2). The minimum size which may be packed will change from pack size 288 to a new pack size 138, but the minimum diameter permitted to be shipped will continue to be 2 6/16 inches.

Changing the grapefruit pack sizes from a 1 2/5 bushel box basis to pack sizes based on the 7/10 bushel carton also requires conforming changes to the grapefruit size regulations in 906.365(a)(4). The minimum pack size will change from pack size 96 to pack size 48, but the minimum diameter permitted to be shipped will remain 3 9/16 inches. A reference to current pack size 112 in 906.365(a)(4) will change to pack size 56. That paragraph provides that pack size 56 grapefruit (with a minimum diameter of 3 5/16 inches) may be packed and shipped if the fruit grades at least U.S. No. 1.

The Committee concluded that leaving the pack sizes as they currently are could cause the Texas citrus industry to lose fresh orange sales. The pack size changes are expected to result in increased sales, but the amount of increase cannot be determined precisely.

Eliminating the references to the 1 2/5 bushel box in the regulations will not have any effect upon producer returns or sales. It simply eliminates an antiquated unit of measure from the regulations, will prevent confusion, and eliminate the need for converting 1 2/5 bushel box references to the standard 7/10 bushel carton.

Changing the grapefruit pack sizes consistent with the changes being recommended in the orange pack sizes would prevent confusion in the industry. The industry, both sellers and buyers, currently refer to the size of grapefruit (and oranges) by the number of fruit packed in a 7/10 bushel carton. The changes made by this action reflect this industry practice.

The opportunities and benefits of these changes are expected to be equally available to all Texas citrus producers and handlers regardless of their size of operation. The recommended changes offer benefits to the entire Texas citrus industry. These changes will enable handlers to compete more effectively in the marketplace. They will also contribute to the industry's long-term objective to market as much citrus as possible. These regulation changes are expected to lead to market expansion, which would benefit producers, handlers, buyers, and consumers of Texas citrus. Accordingly, in assessing alternatives to the changes provided in this interim final rule, this action provides the most beneficial results.

This rule will not impose any additional reporting or recordkeeping requirements on either small or large Texas orange and grapefruit handlers. As with all Federal marketing order programs, reports and forms are periodically reviewed to reduce information requirements and duplication by industry and public sectors. In addition, the Department has not identified any relevant Federal rules that duplicate, overlap, or conflict with this rule.

Further, the Committee's meetings were widely publicized throughout the Texas orange and grapefruit industry and all interested persons were invited to attend the meetings and participate in Committee deliberations. Like all Committee meetings, the May 13, 1999, and July 1, 1999, meetings were public meetings and all entities, both large and small, were able to express their views on this issue.

Also, the Committee has a number of appointed subcommittees to review certain issues and make recommendations to the Committee. The Committee's Grade and Size Subcommittee met on April 20, April 29, and May 4, 1999, and discussed this issue in detail. Those meetings were also public meetings and both large and small entities were able to participate and express their views. Finally, interested persons are invited to submit information on the regulatory and informational impacts of this action on small businesses.

After consideration of all relevant material presented, including the Committee's recommendation, and other information, it is found that this interim final rule, as hereinafter set forth, will tend to effectuate the declared policy of the Act.

This rule invites comments on changes to the pack requirements and conforming changes to the size regulations currently prescribed under the Texas citrus marketing order. Any comments received will be considered prior to finalization of this rule.

Pursuant to 5 U.S.C. 553, it is also found and determined upon good cause that it is impracticable, unnecessary, and contrary to the public interest to give preliminary notice prior to putting this rule into effect and that good cause exists for not postponing the effective date of this rule until 30 days after publication in the **Federal Register** because: (1) This rule changes pack requirements applied to handlers of Texas citrus grown in the production area to enable them to compete more

effectively in the marketplace; (2) the regulatory period begins September 1 and this action should be in effect promptly so handlers can plan accordingly; (3) the Committee unanimously recommended these changes at public meetings and interested parties had an opportunity to provide input; (4) Texas citrus handlers are aware of this action and are preparing to operate under the new pack sizes; and (5) this rule provides a 60-day comment period and any comments received will be considered prior to finalization of this rule.

**List of Subjects in 7 CFR part 906**

Grapefruit, Marketing agreements, Oranges, Reporting and recordkeeping requirements.

For the reasons set forth in the preamble, 7 CFR part 906 is amended as follows:

## PART 906—ORANGES AND GRAPEFRUIT GROWN IN LOWER RIO GRANDE VALLEY IN TEXAS

1. The authority citation for 7 CFR part 906 continues to read as follows:

**Authority:** 7 U.S.C. 601–674.

2. The subpart heading immediately preceding § 906.340 is revised to read ''**Subpart—Container and Pack Requirements**''

3. In § 906.340, paragraphs (a)(2)(i)(b) and (a)(2)(i)(c) are removed, and paragraphs (a)(2)(i), Tables I and II, and (a)(2)(ii) are revised to read as follows:

**§ 906.340 Container, pack, and container marking regulations.**

(a) * * *

(2) *Pack regulation.* (i) *Oranges.* (A) Oranges, when packed in any carton, bag, or other container, shall be sized in accordance with the sizes in the following Table I, and, when place packed in cartons or other containers, meet the requirements of standard pack; and, when in containers not packed according to a definite pattern, shall be sized in accordance with the sizes in Table I and otherwise meet the requirements of standard sizing: *Provided,* That the packing tolerances in the U.S. Standards for Grades of Oranges (Texas and States other than Florida, California, and Arizona), shall apply to fruit so packed:

TABLE I.—ORANGES

[7/10 bushel carton]

| Pack size/Number of oranges | Diameter in inches | |
|---|---|---|
| | Minimum | Maximum |
| 24 | 3 12/16 | 5 1/16 |
| 32 | 3 6/16 | 4 9/16 |
| 36 | 3 4/16 | 4 6/16 |
| 40 | 3 2/16 | 4 4/16 |
| 48 | 2 15/16 | 4 |
| 56 | 2 13/16 | 3 13/16 |
| 64 | 2 11/16 | 3 10/16 |
| 72 | 2 9/16 | 3 8/16 |
| 88 | 2 8/16 | 3 4/16 |
| 113 | 2 7/16 | 3 |
| 138 | 2 6/16 | 2 12/16 |

(B) If 7/10 bushel containers of oranges are marked, the count of fruit in each container shall not be less than the count marked on the container, but may exceed the count marked on the container by not more than 8 percent. When packed in marked containers other than 7/10 bushel, the pack sizes applicable to 7/10 bushel containers shall also apply to such containers.

(ii) *Grapefruit.* (A) Grapefruit, when packed in any carton, bag, or other container, shall be sized in accordance with the sizes in the following Table II, except as otherwise provided in the regulations issued pursuant to this part, and when place packed in cartons or other containers meet the requirements of standard pack; and, when in containers not packed according to a definite pattern, shall be sized in accordance with the sizes in Table II and otherwise meet the requirements of standard sizing: *Provided,* That the packing tolerances in the U.S. Standards for Grades of Grapefruit (Texas and States other than Florida, California, and Arizona), shall apply to fruit so packed:

TABLE II.—GRAPEFRUIT

[7/10 bushel carton]

| Pack size/Number of grapefruit | Diameter in inches | |
|---|---|---|
| | Minimum | Maximum |
| 18 | 4 15/16 | 5 9/16 |
| 23 | 4 5/16 | 5 |
| 27 | 4 2/16 | 4 12/16 |
| 32 | 3 15/16 | 4 8/16 |
| 36 | 3 13/16 | 4 5/16 |
| 40 | 3 10/16 | 4 2/16 |
| 48 | 3 9/16 | 3 14/16 |
| 56 | 3 5/16 | 3 10/16 |

(B) If 7/10 bushel containers of grapefruit are marked, the count of fruit in the container shall not be less than the count marked on the container, but may exceed the count marked on the container by not more than 8 percent. When packed in marked containers other than 7/10 bushel, the pack sizes applicable to 7/10 bushel containers shall also apply to such containers.

* * * * *

3. Section 906.365 is amended by revising paragraphs (a)(2) and (a)(4) to read as follows:

**§ 906.365 Texas Orange and Grapefruit Regulation 34.**

(a) * * *

(2) Such oranges are at least pack size 138 with a minimum diameter limit of 2 6/16 inches;

* * * * *

(4) Such grapefruit are at least pack size 48 with a minimum diameter limit of 3 9/16: *Provided,* That any handler may handle grapefruit smaller than pack size 48, if such grapefruit grade at least U.S. No. 1 and they are at least pack size 56 with a minimum diameter limit of 3 5/16 inches.

* * * * *

Dated: August 26, 1999.

**Robert C. Keeney,**

*Deputy Administrator, Fruit and Vegetable Programs.*

[FR Doc. 99–22666 Filed 8–30–99; 8:45 am]

BILLING CODE 3410–02–P

---

## DEPARTMENT OF AGRICULTURE

## Commodity Credit Corporation

## 7 CFR Part 1439

**RIN 0560–AF57**

## Flood Compensation Program

**AGENCY:** Commodity Credit Corporation, USDA.

**ACTION:** Interim rule with request for comments.

**SUMMARY:** This rule provides relief for a special Flood Compensation Program for farmers in certain counties affected by long-term flooding. Twelve million dollars have been made available from proceeds from a disaster reserve under section 813 of the Agricultural Act of 1970. Another thirty million dollars have been made available using funds under section 1102(c) of the Agriculture, Rural Development, Food and Drug Administration, and Related Appropriations Act, 1999 (1999 Act). Farmers can, subject to certain payment limits, receive payment for the loss of the use of cropland or pastureland in eligible counties during the period from October 1, 1997 through September 30, 1998. The county must have been declared a disaster area under a Presidential Declaration or Secretarial Designation during a period specified in the rules and land on at least one farm in the county must be cropland or pasture land that was flooded sometime after October 1, 1992. Other limitations also apply. Applicants for assistance must own or have a binding cash lease on the property and have owned it or leased it continuously since October 1, 1997. These rules are designed to address circumstances where changes in bodies of water may have produced widespread losses that might not otherwise generate assistance under other programs. At least $12 million of the total $42 million will be reserved for livestock producers because of the special needs of such producers.

**DATES:** Effective August 26, 1999. Comments on this rule must be received by September 27, 1999 in order to be assured of consideration. Comments on the information collection must be received by October 25, 1999 in order to be assured of consideration.

**ADDRESSES:** Comments should be mailed to Diane Sharp, Director, Production, Emergencies, and Compliance Division, Farm Service Agency, United States Department of Agriculture, STOP 0517, 1400 Independence Avenue, SW, Washington, DC 20250–0517, telephone (202) 720–7641, e-mail Diane__Sharp@wdc.fsa.usda.gov. Comments may be inspected in the Office of the Director, PECD, Farm Service Agency (FSA), USDA, Room 4752 South Building, Washington, DC, between 7:30 a.m. and 4:30 p.m., Monday through Friday, except holidays.

**FOR FURTHER INFORMATION CONTACT:** Helen Smith, at the above address, (202) 720–6601.

**SUPPLEMENTARY INFORMATION:**

### Executive Order 12866

This interim rule is issued in conformance with Executive Order 12866 and has been determined to be significant and therefore has been reviewed by the Office of Management and Budget (OMB).

### Regulatory Flexibility Act

It has been determined that the Regulatory Flexibility Act is not applicable to this rule because the Farm Service Agency (FSA) and the Commodity Credit Corporation (CCC) are not required by 5 U.S.C. 553 or any other provision of law to publish a notice of proposed rulemaking with respect to the subject matter of this rule.

### Environmental Evaluation

It has been determined by an environmental evaluation that this action will have no significant impact on the quality of the environment nor an adverse effect on human health on any population. Therefore, neither an environmental assessment nor an Environmental Impact Statement is needed.

### Executive Order 12988

This rule has been reviewed in accordance with Executive Order 12988. The provisions of this rule preempt State laws to the extent such laws are inconsistent with the provisions of this rule. Before any judicial action may be brought concerning provisions of this rule, administrative remedies must be exhausted.

### Executive Order 12372

This program is not subject to the provisions of Executive Order 12372, which require intergovernmental consultation with State and local officials. See the notice related to 7 CFR part 3015, subpart V, published at 48 FR 29115 (June 24, 1983).

### Unfunded Mandates Reform Act of 1995

This rule contains no Federal mandates under the regulatory provisions of Title II of the Unfunded Mandates Reform Act of 1995 (UMRA) for State, local, and tribal governments or the private sector. Thus, this rule is not subject to the requirements of sections 202 and 205 of UMRA.

### Paperwork Reduction Act

Information will be collected for the program provided for in this notice. The information collected will be used to operate the Flood Compensation Program. In accordance with the Paperwork Reduction Act, the Commodity Credit Corporation will submit an emergency information collections request to OMB for approval of the Flood Compensation Program reports as necessary for the proper functioning of the program.

*Title:* Flood Compensation Program.

*OMB Control Number:* 0560—New.

*Type of Request:* Request for approval of a New Information Collection.

*Abstract:* Producers must have land in counties declared a disaster area by a Presidential Declaration or Secretarial Designation during the period January 1, 1997, through August 1, 1998, as a result of damage due to severe flooding or excess moisture in order to be eligible

for benefits. Approval for benefits is contingent upon a determination that due to flooding or excess moisture the land was unfit for crop production, haying, grazing, or other agricultural production at all times during FY 1998. Producers will be required to certify the fields and acres that were unfit for crop production, haying, grazing, or other agricultural production at times during FY 1998 due to the flooding or excess moisture. The information collection will be used to determine the eligibility and amount of assistance. The information collection is essential to eligibility and assistance determinations.

*Estimate of Burden:* Public reporting burden for this collection of information is estimated to average 1 hour per response.

*Respondents:* Producers.

*Estimated Number of Respondents:* 6,500.

*Estimated Number of Responses per Respondent:* 1.

*Estimated Total Annual Burden on Respondents:* 6,500 hours.

*Proposed topics for comment include:* (a) Whether the collection of information is necessary for the proper performance of the function of the agency, including whether the information will have practical utility; (b) the accuracy of the agency's estimate of burden including the validity of the methodology and assumptions used; (c) ways to enhance the quality, utility, and clarity of the information collected; and (d) ways to minimize the burden of the collection of the information on those who are to respond, including through the use of appropriate automated, electronic, mechanical, or other technological collection techniques or other forms of information technology. Comments should be sent to the Desk Officer for Agriculture, Office of Information and Regulatory Affairs, Office of Management and Budget, Washington, DC 20503 and to Diane Sharp, Director, Production, Emergencies, and Compliance Division, Farm Service Agency, United States Department of Agriculture, STOP 0517, 1400 Independence Avenue SW, Washington, DC 20250–0517, telephone (202) 720–7641.

**Executive Order 12612**

It has been determined that this rule does not have sufficient Federalism implications to warrant the preparation of a Federalism Assessment. The provisions contained in this rule will not have a substantial direct effect on States or their political subdivisions, or on the distribution of power and responsibilities among the various levels of government.

Section 1133 of the 1999 Act exempts implementation of section 1102 from public rule-making. Although this rule is based on another authority as well (section 813 of the Agricultural Act of 1970 (7 U.S.C. 1427a)), in order to be consistent with the 1999 Act, to allow immediate acceptance of applications, and to assure that relief is made available promptly, this rule is made effective immediately with a 30-day comment period. Further delay would, for the reasons given, be contrary to the public interest. Likewise, to the extent that any statute requires Congressional review prior to implementation, it is determined that delay for such review would be contrary to the public interest.

**Background**

This interim rule sets forth the terms and conditions of the Flood Compensation Program (FCP) established by the Secretary of Agriculture to be carried out through the Commodity Credit Corporation (CCC) by the Farm Service Agency (FSA) of the Department of Agriculture (USDA). On June 12, 1996, Congress passed a Concurrent Resolution (S. Con. Res. 63), which addresses the Secretary's authority to dispose of commodities held in the disaster reserve established under section 813 of the Agricultural Act of 1970 (7 U.S.C. 1427a). The Concurrent Resolution suggests that the proceeds of the reserve be used for the benefit of livestock producers whose ability to maintain livestock is adversely affected by disaster conditions, such as prolonged drought or flooding. Accordingly, the Secretary designated $12 million received from the sale of commodities previously held in the disaster reserve to compensate livestock producers whose flooded land was previously used in the production of feed or grazing for livestock.

In addition, section 1102(c) of the Agriculture, Rural Development, Food and Drug Administration, and Related Agencies Appropriations Act, 1999 (Pub. L. 105–277) (1999 Act) appropriated funds to the Secretary ''to make assistance available to producers on a farm who have incurred multiyear losses (as defined by the Secretary) in the 1998 and preceding crops of a commodity due to disasters.'' Of that appropriation, the Secretary has designated $30 million for the FCP established by this subpart. Accordingly, a total of $42 million is made available to carry out the FCP.

The rule is designed to focus on counties with generalized flooding problems since 1992, due to, for example, the expansion of the boundaries of natural bodies of water such as Devil's Lake in North Dakota and Day County and surrounding counties in South Dakota. Such flooding can change the basic character of the land and render the land ineligible for other benefits or for enrollment in programs like the Conservation Reserve Program (CRP). Generalized conditions of that sort can produce tertiary effects in the local community and accordingly, problems such as those in Devil's Lake have been the source of considerable attention and concern with respect to the exercise of discretionary authorities that may be available to the Secretary of Agriculture. The rule is addressed to those situations and is designed to focus on recent losses caused by flooding that may have occurred in the recent past, much as in the generalized disaster program provided for in section 1102 of the 1999 Act. Hence, the regulations set out in this notice would provide compensation to eligible producers whose land was not usable in the period from October 1, 1997 through September 30, 1998. To assure severe enough general conditions to accord with the intent of this program, the rules provide further that a county will be eligible for the program only if the county was declared a disaster area during the period January 1, 1997 through August 1, 1998 due to losses caused by flooding or excess moisture. Also, the county must have been experiencing such losses since 1992 in order to identify places where the problem is a long-term problem, but one that involves increasing losses due to increased flooding.

General Rules for programs of this type are provided in part 1439, which was revised in total by a rule published on March 19, 1999 (64 FR 13497). In the new program, no person, as defined in the applicable regulations, may receive over $40,000, and no person may receive any payment if that person's gross revenue for 1998, as determined in conformity with the rules, exceeded $2.5 million. The applicant must be the owner or lessee under a binding lease of cropland or pastureland that was engulfed after 1992, must have owned or leased the land continuously since October 1, 1997 and must still be the owner or lessee of the land. Other restrictions apply as well.

Also, this rule modifies the March 19, 1999 rule that, in addition to providing the general provisions for part 1439, set out specific rules for a general Livestock Assistance Program (LAP). The LAP rule indicated that LAP payments would be in addition to other payments received under other programs. That rule has

been changed in this rule to avoid the possibility of over-compensation for the same losses. Specifically, 1439.101(c) is amended so that, unless otherwise specified in some other authority, there will not be such double payment unless specifically approved for reasons of equity by the agency.

Because livestock producers don't generally have access to the same programs as other producers and because of the concern expressed in the 1996 resolution, at least $12 million of the total $42 million provided in the new program set out in this rule will be reserved for persons who, during the time set in the regulations, were livestock producers, even if it becomes necessary to prorate benefits due to claims in excess of available funds. Unadjusted payment rates will be based on the average local rental rates for crop land and pasture land, using, where possible, National Agricultural Statistical Service data.

**List of Subjects in 7 CFR Part 1439**

Animal feed, Disaster assistance, Flooded land, Livestock programs, Reporting and recordkeeping requirements.

Accordingly, 7 CFR part 1439 is amended as follows:

## PART 1439—EMERGENCY LIVESTOCK ASSISTANCE

1. The authority citation for 7 CFR part 1439 is revised to read as follows:

**Authority:** 7 U.S.C. 1427a; 15 U.S.C. 714b and 714c; Sec. 1102, Pub. L. 105–277, 122 Stat. 2681.

### § 1439.101 [Amended].

2. Section 7 CFR 1439.101(c) is revised by removing the word ''eligible'' and adding the phrase ''not eligible'' in its place.

3. Part 1439 is amended by adding a new subpart entitled ''Subpart—1998 Flood Compensation Program (FCP)'', to read as follows:

### Subpart—1998 Flood Compensation Program

Sec.

1439.201 Applicability.
1439.202 Administration.
1439.203 Definitions.
1439.204 Application process.
1439.205 County committee determinations of general applicability.
1439.206 Eligible producers, eligible land and loss criteria.
1439.207 Producer eligibility.
1439.208 Calculation of assistance.
1439.209 Availability of funds.

### Subpart—1998 FLood Compensation Progam

### § 1439.201 Applicability.

This subpart sets forth the terms and conditions applicable to the 1998 Flood Compensation Program (FCP). Benefits will be provided to eligible livestock and non-livestock producers in the United States but only in counties where long term flooding occurred, and that were subsequently approved by the Deputy Administrator for Farm Programs as eligible counties.

### § 1439.202 Administration.

This subpart shall be administered as set forth in § 1439.2 of this part.

### § 1439.203 Definitions.

Terms in this part shall have the same meanings as are assigned by those defined in § 1439.3 and § 718.2 of this title. In addition, for purposes of this part and notwithstanding any contrary definitions in this part or part 718:

*Application* means Form CCC–454, Flood Compensation Program Application. Form CCC–454 is available at county FSA offices.

*FCP* means the Flood Compensation Program provided for in this part.

*FY* 1998 means the period from October 1, 1997 through September 30, 1998.

*Livestock* means beef and dairy cattle, buffalo and beefalo (when maintained in the same manner as beef cattle), sheep, goats, swine, poultry, and equine animals used commercially for human food or kept for the production of food or fiber on the owner's farm.

*NASS* means The National Agricultural Statistics Service.

### § 1439.204 Application process.

(a) Producers must submit a completed application prior to the close of business on July 2, 1999, or other such date as established by the Deputy Administrator. The application and any supporting documentation shall be submitted to the county office with administrative authority over a producer's eligible flooded land or to the county office that maintains the farm records for the producer.

(b) Producers shall certify as to the accuracy of all the information contained in the application, and provide any other information to CCC that the County Office or Committee deems necessary to determine the producer's eligibility.

### § 1439.205 County committee determinations of general applicability.

(a)(1) County Committees in counties declared or designated a disaster area by a Presidential Declaration or Secretarial Designation during the period January 1, 1997, through August 1, 1998, because of severe flooding or excessive moisture shall determine whether that county has at least one farm with land used for the production of crops, feed, seed, or other agricultural use prior to October 1, 1992, on which both of the following apply:

(i) Land on the farm that otherwise would have been used for crops or for pasture was inaccessible or incapable of production at all times during FY 1998 due to flooding; and

(ii) Land on the farm has been subject to continuous flooding that began any time during FY 1993 and continued through FY 1998.

(2) In making this determination, the County committee shall use what it considers to be the best information available, including but not limited to: Extension Service, Natural Resources Conservation Service, aerial photography, rainfall data, and general knowledge of losses due to flooding

(b) Having made an affirmative determination under paragraph (a), the county committee shall, if it is also determined that cropland or pastureland in the county was incapable of crop production during FY 1998 because of new or increased continuous flooding that occurred since FY 1992, submit to the Deputy Administrator for Farm Programs, with State Committee concurrence, a memorandum of request for affirmance of the county as an eligible county for purposes of this part. That request shall be accompanied by a copy of applicable notification of disaster declaration or designation, and copies of certification maps and acreage reports from one farm in the county that indicate continuous flooding occurred on the farm that began no later than October 1, 1993. Upon affirmance by the Deputy Administrator or designee after review, the county shall be considered to be an ''eligible county'' for purposes of this part.

(c) With respect to each eligible county, the county committee for that county shall establish separate payment rates for cropland and pasture land. These rates shall be reviewed by the State Committee and shall be equal to the estimated five-year average for all land of each type in the county. The State Committee may take into account rates established for the Conservation Reserve Program operated under 7 CFR part 1410 and ensure, subject to paragraph (d), that the rates are comparable. The Deputy Administrator shall review and may adjust the rates for reasonableness and consistency.

(d) Except as provided by the Deputy Administrator, payment rates shall be established based on NASS data in the

States for which NASS has established rental rates on a county-by-county basis for 1998.

**§ 1439.206 Eligible producers, eligible land, and loss criteria.**

(a) The flooded land for which a producer requests benefits must be within the physical boundary of an eligible county. Producers in unapproved counties contiguous to an eligible county may not receive benefits under this subpart.

(b) To be eligible for benefits under this subpart, a producer in an eligible county must have a tract of land that meets all the following criteria:

(1) The land is cropland or pasture land used for the production of feed for livestock (haying, grazing, or feed grain production) or other agricultural use in one or more years during the period beginning October 1, 1991, through September 30, 1997;

(2) The land was inaccessible or unfit for crop production, grazing, or haying because of flooding or excess moisture during all of the period beginning October 1, 1997, through September 30, 1998;

(3) The land has been owned or leased under a binding cash lease by the producer continuously since October 1, 1997;

(4) The land is a contiguous parcel of land with an area equal to one acre or more;

(5) The land was not, except as determined by the Deputy Administrator, the subject of, nor will be the subject of, any other Federal payment for activities or lack of activity during the period October 1, 1997, through September 30, 1998, whether or not disaster-related, with the exception of the production flexibility contract (PFC) program payments received under part 1412 of this chapter. This prohibition includes but is not limited to other payments under this part; the Conservation Reserve Program, part 1410 of this chapter; the Wetlands Reserve Program, part 1467 of this chapter; or any Emergency Watershed Protection Program or Federal Easement Program that prohibits crop production or grazing.

(c) On Form CCC–454 producers shall be required to certify on each farm the number of flooded cropland and non-cropland acres for the farm in 1998 and the number of flooded cropland and non-cropland acres in 1992. To establish the acreage eligible for payment, flooded land certified for 1992 shall be subtracted from the flooded land certified for 1998 for each applicable type. The difference will be the acreages of cropland and non-cropland subject to flooding and eligible for FCP payment, except that the difference may be adjusted as needed to ensure, to the extent practicable, an accurate estimate of the net increased flooding on the farm after October 1, 1993.

(d) All determinations as to the amount of land eligible for enrollment and compensation under this subpart are subject to approval by the county committee.

(e) The county committee may use any available documentation to make the determinations under paragraphs (b) and (c) of this section, including but not limited to: maps, slides, precipitation data, water table levels and disaster reports.

**§ 1439.207 Producer eligibility.**

(a) At least $12 million in payments under this part shall be reserved for livestock producers. For this purpose, a livestock producer is a person who, on the applicable farm, meets the definition of livestock producer set out in § 1439.3 during the period beginning January 1, 1993 and ending with the ending date of the Presidential disaster designation that qualified the county for this program.

(b) Payments under this subpart shall be subject to the provisions of § 1439.1 through § 1439.12, and their successor regulations, except as otherwise provided in this subpart.

(c) No person (as defined and determined under part 1400 of this chapter) may receive more than $40,000 under this subpart.

(d) No person (as defined and determined under part 1400 of this chapter) will be eligible for payment under this subpart if that person's annual gross receipts for the most recent tax year preceding the crop year for which benefits are requested were in excess of $2.5 million. That determination shall be made in the manner provided for in § 1439.11.

(e) The following entities are not eligible for benefits under this subpart:

(1) State or local governments or subdivisions thereof; or

(2) Any individual or entity who is a foreign person as determined in accordance with the provisions of § 1400.501 and § 1400.502 of this chapter.

**§ 1439.208 Calculation of Assistance.**

(a) The unadjusted value of FCP assistance determined with respect to the flooded land in an eligible county for each producer may not exceed the amount obtained by adding paragraphs (b) and (c) of this section.

(b) For each eligible producer with respect to the applicable qualifying cropland, the established local payment rate for cropland will be multiplied by the number of qualifying acres, as determined by the County Committee in accordance with instructions from the Deputy Administrator.

(c) For each eligible producer with respect to the applicable qualifying non-cropland, the established local payment rate for non-cropland will be multiplied by the number of qualifying acres, as determined by the County Committee in accordance with instructions from the Deputy Administrator.

**§ 1439.209 Availability of Funds.**

In the event that the total amount of claims submitted under this subpart exceeds the $42 million appropriated for FCP, each payment shall be reduced by a uniform national percentage except as needed to assure sufficient payment to livestock producers as provided for in this part. Such payment reductions shall be after the imposition of applicable payment limitation provisions.

Signed in Washington, DC, on August 26, 1999.

**Parks Shackelford,**

*Executive Vice President, Commodity Credit Corporation.*

[FR Doc. 99–22626 Filed 8–26–99; 4:24 pm]

BILLING CODE 3410–05–P

---

## DEPARTMENT OF TRANSPORTATION

## Federal Aviation Administration

## 14 CFR Parts 14 and 17

**[Docket No. FAA–1998–4379; Amendment No. 14–03, Part 17 (New)]**

**RIN 2120–AG19**

## Procedures for Protests and Contract Disputes; Amendment of Equal Access to Justice Act Regulations; Correction

**AGENCY:** Federal Aviation Administration (FAA), DOT.

**ACTION:** Final rule; correction.

**SUMMARY:** This document makes certain corrections to the final rule published in the **Federal Register** on June 18, 1999, (64 FR 32926), which provides regulations for the conduct of protests and contract disputes under the Federal Aviation Administration Acquisition Management System.

**DATES:** Effective on August 31, 1999.

**FOR FURTHER INFORMATION CONTACT:** Marie A. Collins, telephone: (202) 366–6400.

**SUPPLEMENTARY INFORMATION:** This action adds language inadvertently omitted from the final rule, corrects erroneous references to subsections, and

modifies the ''Discussion of Comments'' section accordingly. The added language was contained originally in the Notice of Proposed Rulemaking (NPRM) published in the **Federal Register** on August 25, 1998 (63 FR 45372) and was discussed in the ''Discussion of Comments'' section of the final rule. That section indicated that the language pertaining to the deadline for requesting intervenor status in protests of contract awards and Attorneys' fees was unchanged from that contained in the NPRM, but that the provision pertaining to payment of interest was eliminated.

**Correction**

In rule FR Doc. 99–15217, published on June 18, 1999 (64 FR 32926), make the following corrections:

1. On page 32926, in the heading, on the 6th line, correct ''No. 14–0317–01'' to read ''No. 14–03, Part 17 (New)''.

2. On page 32933, in the third column, second full paragraph, line 7, correct ''§ 17.39(m) as well'' to read ''§ 17.39(l), which was moved to § 17.39(m)''.

3. On page 32933, in the third column, second full paragraph, beginning on line 11, add the following sentence, ''Former § 17.39(l) and language was added to clarify the process of releasing findings and recommendations that contain protected information subject to a protective order.''.

4. On page 32933, in the third column, second full paragraph, line 21, before the word ''Finally,'' add the following sentence, ''The language in former § 17.39(m) pertaining to Attorneys' fees was moved to § 17.39(n).''.

5. On page 32939, in the second column, in § 17.15, add a sentence at the end of paragraph (f) to read as follows:

**§ 17.15 Filing a protest.**

* * * * *

(f) * * * The awardee and/or interested parties shall notify the ODRA in writing, of their interest in participating in the protest as intervenors within two (2) business days of receipt of the CO's notification, and shall, in such notice, designate a person as the point of contact for the ODRA. Such notice may be submitted to the ODRA by facsimile.

* * * * *

6. On page 32944, second column, in § 17.39, add paragraph (n), to read as follows:

**§ 17.39 Default adjudicative process for contract disputes.**

* * * * *

(n) Attorneys fees of a qualified prevailing contractor are allowable to the extent permitted by the EAJA, 5 U.S.C. 504 (a) (1).

Issued in Washington, DC on August 24, 1999.

**Donald P. Byrne,**

*Assistant Chief Counsel.*

[FR Doc. 99–22297 Filed 8–30–99; 8:45 am]

BILLING CODE 4910–13–M

---

## DEPARTMENT OF TRANSPORTATION

## Federal Aviation Administration

## 14 CFR Part 39

**[Docket No. 98–SW–72–AD; Amendment 39–11268; AD 99–18–02]**

**RIN 2120–AA64**

## Airworthiness Directives; Bell Helicopter Textron, Inc. Model 205A–1 and 205B Helicopters

**AGENCY:** Federal Aviation Administration, DOT.

**ACTION:** Final rule.

**SUMMARY:** This amendment adopts a new airworthiness directive (AD), applicable to Bell Helicopter Textron, Inc. (BHTI) Model 205A–1 and 205B helicopters, that requires inspecting the vertical fin spar cap (spar cap) for cracking, corrosion, or disbonding; modifying the vertical fin; and replacing the left-hand spar cap. This amendment is prompted by five accidents involving helicopters of similar type design. The actions specified by this AD are intended to detect fatigue cracking or corrosion on the spar cap, which could lead to failure of the vertical fin spar, loss of the tail rotor, and subsequent loss of control of the helicopter.

**DATES:** Effective October 5, 1999.

The incorporation by reference of certain publications listed in the regulations is approved by the Director of the **Federal Register** as of October 5, 1999.

**ADDRESSES:** The service information referenced in this AD may be obtained from Bell Helicopter Textron, Inc., P.O. Box 482, Fort Worth, Texas 76101, telephone (817) 280–3391, fax (817) 280–6466. This information may be examined at the FAA, Office of the Regional Counsel, Southwest Region, 2601 Meacham Blvd., Room 663, Fort Worth, Texas; or at the Office of the **Federal Register**, 800 North Capitol Street, NW., suite 700, Washington, DC.

**FOR FURTHER INFORMATION CONTACT:** Mike Kohner, Aerospace Engineer, FAA, Rotorcraft Directorate, Rotorcraft Certification Office, 2601 Meacham Blvd., Fort Worth, Texas 76137, telephone (817) 222–5447, fax (817) 222–5783.

**SUPPLEMENTARY INFORMATION:** A proposal to amend part 39 of the Federal Aviation Regulations (14 CFR part 39) to include an airworthiness directive (AD) that is applicable to BHTI Model 205A–1 and 205B helicopters was published in the **Federal Register** on June 3, 1999 (64 FR 29814). That action proposed to require:

—Visually inspecting the spar cap for any crack or disbonding;
—Inspecting the spar cap for any disbonding using a tap hammer;
—Modifying the vertical fin;
—After modifying the vertical fin, inspecting the spar cap for any cracks using a dye-penetrant inspection method; and
—Replacing the left-hand spar cap.

Interested persons have been afforded an opportunity to participate in the making of this amendment. No comments were received on the proposal or the FAA's determination of the cost to the public. The FAA has determined that air safety and the public interest require the adoption of the rule as proposed except for minor editorial changes. The FAA has determined that these changes will neither increase the economic burden on any operator nor increase the scope of the AD.

The FAA estimates that 150 helicopters of U.S. registry will be affected by this AD, that it will take approximately 4 work hours per helicopter to accomplish the initial inspections, 0.5 work hour for the repetitive inspections, and 180 hours to replace the vertical fin spar assembly, and that the average labor rate is $60 per work hour. Required parts will cost approximately $300 per helicopter. Based on these figures, the total cost impact of the AD on U.S. operators is estimated to be $1,705,500 to conduct the initial inspection and one repetitive inspection, and replace the vertical vin spar assembly on all the fleet.

The regulations adopted herein will not have substantial direct effects on the States, on the relationship between the national government and the States, or on the distribution of power and responsibilities among the various levels of government. Therefore, in accordance with Executive Order 12612, it is determined that this final rule does not have sufficient federalism implications to warrant the preparation of a Federalism Assessment.

For the reasons discussed above, I certify that this action (1) is not a ''significant regulatory action'' under

Executive Order 12866; (2) is not a ''significant rule'' under DOT Regulatory Policies and Procedures (44 FR 11034, February 26, 1979); and (3) will not have a significant economic impact, positive or negative, on a substantial number of small entities under the criteria of the Regulatory Flexibility Act. A final evaluation has been prepared for this action and it is contained in the Rules Docket. A copy of it may be obtained from the Rules Docket at the location provided under the caption **ADDRESSES.**

**List of Subjects in 14 CFR Part 39**

Air transportation, Aircraft, Aviation safety, Incorporation by reference, Safety.

Adoption of the Amendment

Accordingly, pursuant to the authority delegated to me by the Administrator, the Federal Aviation Administration amends part 39 of the Federal Aviation Regulations (14 CFR part 39) as follows:

## PART 39—AIRWORTHINESS DIRECTIVES

1. The authority citation for part 39 continues to read as follows:

**Authority:** 49 U.S.C. 106(g), 40113, 44701.

**§ 39.13 [Amended].**

2. Section 39.13 is amended by adding a new airworthiness directive to read as follows:

**AD 99–18–02–AD Bell Helicopter, Textron, Inc.:** Amendment 39–11268. Docket No. 98–SW–72–AD.

*Applicability:* Model 205A–1 helicopters with vertical fin spar cap, part number (P/N) 212–030–447–001 or –101, installed, and Model 205B helicopters with vertical fin spar cap, P/N 212–030–447–101, installed, certificated in any category.

**Note 1:** This AD applies to each helicopter identified in the preceding applicability provision, regardless of whether it has been otherwise modified, altered, or repaired in the area subject to the requirements of this AD. For helicopters that have been modified, altered, or repaired so that the performance of the requirements of this AD is affected, the owner/operator must request approval for an alternative method of compliance in accordance with paragraph (d) of this AD. The request should include an assessment of the effect of the modification, alteration, or repair on the unsafe condition addressed by this AD; and, if the unsafe condition has not been eliminated, the request should include specific proposed actions to address it.

*Compliance:* Required as indicated, unless accomplished previously.

To prevent failure of the vertical fin (fin) spar, loss of the tail rotor, and subsequent loss of control of the helicopter, accomplish the following:

(a) For Model 205A–1 helicopters with a fin spar cap (spar cap), P/N 212–030–447–001, installed, accomplish the following:

(1) Within 8 hours time-in-service (TIS), modify the vertical fin and visually inspect the fin spar for cracks in accordance with Part I (A1), paragraphs 1 through 4 of Bell Helicopter Textron, Inc. Alert Service Bulletin No. 205–98–70, Revision A, dated September 21, 1998 (ASB).

(i) If a crack is discovered on the fin spar, replace the fin spar assembly with an airworthy fin spar assembly before further flight. Repair any corrosion or disbonding discovered during the inspection before further flight.

(ii) After inspecting, apply MIL–PRF–81352 clear lacquer or an equivalent coating to the area where the paint and primer were removed. Spray, brush, or wipe on a protective coat of MIL–C–16173, Grade 2, or equivalent compound, over the clear lacquer or equivalent coating.

(iii) Install the inspection door, intermediate gearbox cover, and tail rotor driveshaft cover.

(2) After initially modifying and inspecting the fin, inspect the fin spar for cracks at intervals not to exceed 8 hours TIS as follows:

(i) Accomplish Part I (A2), paragraphs 1 through 3, of the ASB.

(ii) If a crack is discovered on the fin spar, replace the fin spar cap or spar assembly with airworthy parts before further flight. Repair any corrosion or disbonding discovered during the inspection before further flight.

(iii) After inspecting, accomplish Part I (A2), paragraphs 5 and 6, of the ASB.

(3) Within 25 hours TIS, inspect and modify the fin assembly as follows:

(i) Accomplish Part II (C1), paragraph 1, of the ASB.

(ii) Remove the clip, part number (P/N) 212–030–099–091, and radius block, P/N 212–030–099–095, if existing. Remove the retainer, P/N 212–030–121–037, and sufficient rivets from the bottom row of the forward left-hand fin skin to allow trimming of the forward left-hand skin along the skin ''cutline'', approximately fin station 66.31 (see Figure 2 of the ASB).

(iii) Before drilling or reaming, inspect all holes in the spar cap where rivets were removed for short edge distance. If an existing edge distance will be less than 1.5 times the diameter of the drill or reamed hole, repairs must be performed and must be FAA approved before proceeding.

(iv) Accomplish Part II (C1), paragraphs 3, 4, and 6, in the ASB.

(v) If a crack is discovered on the fin spar, replace the fin spar cap or spar assembly with airworthy parts before further flight. Repair any corrosion or disbonding discovered during the inspection before further flight.

(vi) Accomplish Part II (C1), paragraphs 10 through 14, of the ASB.

(4) After initially modifying and dye-penetrant inspecting the fin spar, inspect the fin spar at intervals not to exceed 300 hours TIS as follows:

(i) Accomplish Part II (C2), paragraphs 1, 2, 3, 4, 5, and 7, of the ASB.

(ii) If a crack is discovered on the fin spar, replace the fin spar cap or spar assembly with airworthy parts before further flight. Repair any corrosion or disbonding discovered during the inspection before further flight.

(iii) Accomplish Part II (C2), paragraphs 11 through 14, of the ASB.

(5) Within 12 calendar months, remove the left-hand fin spar cap, P/N 212–030–447–001. Replace it with an airworthy fin spar cap or spar assembly configuration that has been demonstrated to the FAA to satisfy the structural fatigue requirements of repeated high-torque events and is approved by the Manager, Rotorcraft Standards Staff.

(6) Installation of a fin spar cap or assembly that has been approved by the Manager, Rotorcraft Standards Staff, constitutes terminating action for the requirements of this AD.

(b) For Model 205A–1 helicopters with a fin spar cap, P/N 212–030–447–101, installed, accomplish the following:

(1) Within 8 hours TIS, modify the vertical fin and visually inspect the fin spar for cracks in accordance with Part II (A1), paragraphs 1 through 5, of the ASB.

(i) If a crack is discovered on the fin spar, replace the fin spar cap or assembly with an airworthy parts before further flight. Repair any corrosion or disbonding discovered during the inspection before further flight.

(ii) After inspecting, apply MIL–PRF–81352 clear lacquer or an equivalent coating to the two lower rivet holes and on the surface where paint and primer were removed. Spray, brush, or wipe on a protective coat of MIL–C–16173, Grade 2 or equivalent compound, over the clear lacquer or equivalent coating. To facilitate subsequent inspections, do not replace the two lower rivets (see Figure 2 of the ASB).

(iii) Before drilling or reaming, inspect all holes in the spar cap where rivets were removed for short edge distance. If an existing edge distance will be less than 1.5 times the diameter of the drill or reamed hole, repairs must be performed and must be FAA approved before proceeding.

(iv) Fasten the forward left-hand fin skin and the retainer, P/N 212–030–121–037, to the spar assembly using Hi-Loks and blind rivets as specified in Figure 2 of the ASB. Reinstall the clip and radius block, if existing, that were removed in accordance with paragraph 2 of Part II (A1) of the ASB.

(v) Refinish the reworked area.

(vi) Install the inspection door, intermediate gearbox cover, and tail rotor driveshaft cover.

(2) After initially modifying and inspecting the fin, inspect the fin spar for cracks at intervals not to exceed 8 hours TIS as follows:

(i) Accomplish Part II (A2), paragraphs 1 through 3, of the ASB.

(ii) If a crack is discovered on the fin spar, replace the fin spar cap or assembly with airworthy parts before further flight. Repair any corrosion or disbonding discovered during the inspection before further flight.

(iii) After inspecting, accomplish Part II (A2), paragraphs 5 and 6, of the ASB.

(3) Within 25 hours TIS, modify and inspect the vertical fin as follows:

(i) Accomplish Part II (C1), paragraph 1, of the ASB.

(ii) Remove the clip, P/N 212–030–099–091, and radius block, P/N 212–030–099–095, if existing. Remove the retainer, P/N 212–030–121–037, and sufficient rivets from the bottom row of the forward left-hand fin skin to allow trimming of the forward left-hand fin skin along the skin ''cutline'', approximately fin station 66.31 (see Figure 2 of the ASB).

(iii) Before drilling or reaming, inspect all holes in the spar cap where rivets were removed for short edge distance. If an existing edge distance will be less than 1.5 times the diameter of the drill or reamed hole, repairs must be performed and must be FAA approved before proceeding.

(iv) Accomplish Part II (C1), paragraphs 3, 4, and 6, of the ASB.

(v) If a crack is discovered on the fin spar, replace the fin spar cap or assembly with airworthy parts before further flight. Repair any corrosion or disbonding discovered during the inspection before further flight.

(vi) Accomplish Part II (C1), paragraphs 10 through 14, of the ASB.

(4) After initially modifying and dye-penetrant inspecting the fin spar, inspect the fin spar at intervals not to exceed 300 hours TIS as follows:

(i) Accomplish Part II (C2), paragraphs 1 through 7, of the ASB.

(ii) If a crack is discovered on the fin spar, replace the fin spar cap or assembly with airworthy parts before further flight. Repair any corrosion or disbonding discovered during the inspection before further flight.

(iii) Accomplish Part II (C2), paragraphs 11 through 14, of the ASB.

(5) Within 25 hours TIS, and thereafter at intervals not to exceed 300 hours TIS, inspect the fin spar as follows:

(i) Accomplish Part II (B), paragraphs 1 through 13, of the ASB.

(ii) Repair any disbonding discovered during the inspection before further flight.

(6) Within 12 calendar months, remove the left-hand fin spar cap, P/N 212–030–447–101. Replace it with an airworthy fin spar cap or spar assembly configuration that has been demonstrated to the FAA to satisfy the structural fatigue requirements of repeated high-torque events and is approved by the Manager, Rotorcraft Standards Staff.

(7) Installation of a fin spar that has been approved by the Manager, Rotorcraft Standards Staff, that satisfies the requirements of paragraph (b)(6) of this AD constitutes terminating action for the requirements of this AD.

(c) For Model 205B helicopters with a fin spar cap, P/N 212–030–447–101, installed, accomplish the following:

(1) Within 8 hours TIS, modify the fin and visually inspect the fin spar for cracks in accordance with Part I (A1), paragraphs 1 through 5, of Bell Helicopter Textron, Inc. Alert Service Bulletin No. 205B–98–26, Revision A, dated September 21, 1998 (205B ASB).

(i) If a crack is discovered on the fin spar, replace the fin spar cap or assembly with airworthy parts before further flight. Repair any corrosion or disbonding discovered during the inspection before further flight.

(ii) After inspecting, apply MIL–PRF–81352 clear lacquer or an equivalent coating to the two lower rivet holes and on the surface where paint and primer were removed. Spray, brush, or wipe on a protective coat of MIL–C–16173, Grade 2, or equivalent compound, over the clear lacquer. To facilitate subsequent inspections, do not replace the two lower rivets (see Figure 2 of the 205B ASB).

(iii) Before drilling or reaming, inspect all holes in the spar cap where rivets were removed for short edge distance. If an existing edge distance will be less than 1.5 times the diameter of the drill or reamed hole, repairs must be performed and must be FAA approved before proceeding.

(iv) Fasten the forward left-hand fin skin and the retainer, P/N 212–030–121–037, to the spar assembly using Hi-Loks and blind rivets as specified in Figure 2 of the 205B ASB. Reinstall the clip and radius block, if existing, removed in paragraph 2 of Part I (A1) of the 205B ASB.

(v) Install the inspection door, intermediate gearbox cover, and tail rotor driveshaft cover.

(2) After initially modifying and inspecting the fin, inspect the fin spar for cracks at intervals not to exceed 8 hours TIS as follows:

(i) Accomplish Part I (A2), paragraphs 1 through 3, of the 205B ASB.

(ii) If a crack is discovered on the spar, replace the fin spar cap or assembly with airworthy parts before further flight. Any corrosion or disbonding discovered during the inspection must be repaired before further flight.

(iii) After inspecting, accomplish Part I (A2), paragraphs 5 and 6, of the 205B ASB.

(3) Within 25 hours TIS, modify and inspect the fin as follows:

(i) Accomplish Part I (C1), paragraph 1 of the 205B ASB.

(ii) Remove the clip, P/N 212–030–099–091, and radius block, P/N 212–030–099–095, if existing. Remove the retainer, P/N 212–030–121–037, and sufficient rivets from the bottom row of the forward left-hand fin skin to allow trimming of the forward left-hand fin skin along the skin ''cutline'', approximately fin station 66.31 (see Figure 2 of the 205B ASB).

(iii) Before drilling or reaming, inspect all holes in the spar cap where rivets were removed for short edge distance. If an existing edge distance will be less than 1.5 times the diameter of the drill or reamed hole, repairs must be performed and must be FAA approved before proceeding.

(iv) Accomplish Part I (C1), paragraphs 3, 4, and 6, in the 205B ASB.

(v) If a crack is discovered on the spar, replace the fin spar cap or assembly with airworthy parts before further flight. Any corrosion or disbonding discovered during the inspection must be repaired before further flight.

(vi) Accomplish Part I (C1), paragraphs 10 through 14, of the 205B ASB.

(4) After initially modifying and dye-penetrant inspecting the fin spar, inspect the fin spar at intervals not to exceed 300 hours TIS as follows:

(i) Accomplish Part I (C2), paragraphs 1, 2, 3, 4, 5, and 7, of the 205B ASB.

(ii) If a crack is discovered on the spar, replace the fin spar cap or assembly with airworthy parts before further flight. Any corrosion or disbonding discovered during the inspection must be repaired before further flight.

(iii) Accomplish Part I (C2), paragraphs 11 through 14, of the 205B ASB.

(5) Within 25 hours TIS, inspect the fin spar at intervals not to exceed 300 hours TIS as follows:

(i) Accomplish Part I (B), paragraphs 1 through 13, of the 205B ASB.

(ii) Any disbonding discovered during the inspection must be repaired before further flight.

(6) Within 12 calendar months, remove the left-hand fin spar cap, P/N 212–030–447–101. Replace it with an airworthy fin spar cap configuration that has been demonstrated to the FAA to satisfy the structural fatigue requirements of repeated high-torque events and is approved by the Manager, Rotorcraft Standards Staff.

(7) Installation of a fin spar that satisfies the above requirements and has been approved by the Manager, Rotorcraft Standards Staff, constitutes a terminating action for the requirements of this AD.

(d) An alternative method of compliance or adjustment of the compliance time that provides an acceptable level of safety may be used if approved by the Manager, Rotorcraft Standards Staff, Rotorcraft Directorate, FAA. Operators shall submit their requests through a FAA Principal Maintenance Inspector, who may concur or comment and then send it to the Manager, Rotorcraft Standards Staff.

**Note 2:** Information concerning the existence of approved alternative methods of compliance with this AD, if any, may be obtained from the Rotorcraft Standards Staff.

(e) Special flight permits may be issued in accordance with sections 21.197 and 21.199 of the Federal Aviation Regulations (14 CFR 21.197 and 21.199) to operate the helicopter to a location where the requirements of this AD can be accomplished.

(f) The modification of the vertical fin, the visual and dye-penetrant inspections, and any necessary repairs shall be done in accordance with Bell Helicopter Textron, Inc. Alert Service Bulletin No. 205–98–70, Revision A, or No. 205B–98–26, Revision A, both dated September 21, 1998, as applicable. This incorporation by reference was approved by the Director of the Federal Register in accordance with 5 U.S.C. 552(a) and 1 CFR part 51. Copies may be obtained from Bell Helicopter Textron, Inc., P.O. Box 482, Fort Worth, Texas 76101, telephone (817) 280–3391, fax (817) 280–6466. Copies may be inspected at the FAA, Office of the Regional Counsel, Southwest Region, 2601 Meacham Blvd., Room 663, Fort Worth, Texas; or at the Office of the Federal Register, 800 North Capitol Street, NW., suite 700, Washington, DC.

(g) This amendment becomes effective on October 5, 1999.

Issued in Fort Worth, Texas, on August 18, 1999.

**Henry A. Armstrong,**

*Manager, Rotorcraft Directorate, Aircraft Certification Service.*

[FR Doc. 99–22077 Filed 8–30–99; 8:45 am]

BILLING CODE 4910–13–U

---

## DEPARTMENT OF TRANSPORTATION

## Federal Aviation Administration

## 14 CFR Part 39

**[Docket No. 99–NM–77–AD; Amendment 39–11269; AD 99–18–03]**

**RIN 2120–AA64**

## Airworthiness Directives; Boeing Model 747 Series Airplanes

**AGENCY:** Federal Aviation Administration, DOT.

**ACTION:** Final rule; request for comments.

**SUMMARY:** This amendment adopts a new airworthiness directive (AD), applicable to certain Boeing Model 747 series airplanes. This action requires repetitive inspections and tests of the thrust reverser control and indication system on each engine, and corrective actions, if necessary; installation of a terminating modification; and repetitive operational checks of that installation, and repair, if necessary. This amendment is prompted by the results of a safety review, which revealed that in-flight deployment of a thrust reverser could result in significant reduction in airplane controllability. The actions specified in this AD are intended to ensure the integrity of the fail-safe features of the thrust reverser system by preventing possible failure modes, which could result in inadvertent deployment of a thrust reverser during flight, and consequent reduced controllability of the airplane.

**DATES:** Effective September 15, 1999.

The incorporation by reference of certain publications listed in the regulations is approved by the Director of the **Federal Register** as of September 15, 1999.

Comments for inclusion in the Rules Docket must be received on or before November 1, 1999.

**ADDRESSES:** Submit comments in triplicate to the Federal Aviation Administration (FAA), Transport Airplane Directorate, ANM–114, Attention: Rules Docket No. 99–NM–77–AD, 1601 Lind Avenue, SW., Renton, Washington 98055–4056.

The service information referenced in this AD may be obtained from Boeing Commercial Airplane Group, P.O. Box 3707, Seattle, Washington 98124–2207. This information may be examined at the FAA, Transport Airplane Directorate, 1601 Lind Avenue, SW., Renton, Washington; or at the Office of the **Federal Register**, 800 North Capitol Street, NW., suite 700, Washington, DC.

**FOR FURTHER INFORMATION CONTACT:** Ed Hormel, Aerospace Engineer, Propulsion Branch, ANM–140S, FAA, Transport Airplane Directorate, Seattle Aircraft Certification Office, 1601 Lind Avenue, SW., Renton, Washington 98055–4056; telephone (206) 227–2681; fax (206) 227–1181.

**SUPPLEMENTARY INFORMATION:** On May 26, 1991, a Boeing Model 767–300ER series airplane was involved in an accident as a result of an uncommanded in-flight deployment of a thrust reverser. Following that accident, a study was conducted to evaluate the potential effects of an uncommanded thrust reverser deployment throughout the flight regime of the Boeing Model 747 series airplane. The study included a re-evaluation of the thrust reverser control system fault analysis and airplane controllability. The results of the evaluation indicated that, in the event of thrust reverser deployment during high-speed climb using high engine power, these airplanes also could experience control problems. This condition, if not corrected, could result in possible failure modes in the thrust reverser control system, inadvertent deployment of a thrust reverser during flight, and consequent reduced controllability of the airplane.

### Explanation of Relevant Service Information

The FAA has reviewed and approved Boeing Alert Service Bulletin 747–78A2148, dated June 1, 1995, and Boeing Service Bulletin 747–78A2148, Revision 1, dated July 20, 1995, which describe procedures for certain repetitive inspections and tests of the thrust reverser system, and corrective actions, if necessary. The inspections and tests include inspection of the thrust reverser control microswitch; a test of the thrust reverser indication system; an integrity check of the number three gear box lock and air motor brake; an inspection of the thrust reverser wire bundle; and an operational test of the thrust reverser. The corrective actions include, among other things:

- Adjustment, or replacement and adjustment, of any microswitch which fails to perform its intended function during movement of the respective forward or reverse thrust lever.
- Replacement of the number 3 gearbox lock or deactivation of the thrust reverser on any engine if the thrust reverser translating cowl moves when the number 3 gearbox lock should be engaged.
- Replacement of the air motor on any engine if the thrust reverser translating cowl moves when the air motor brake should be engaged.
- Replacement of worn or damaged wire clamps and wiring if chafing or other damage is detected.

The FAA also has reviewed and approved Boeing Service Bulletin 747–78–2136, dated May 11, 1995, which describes procedures for installation of provisional wiring:

- Between the P8 panel aisle stand and relay panels P252 and P253;
- Between the P6 overhead panel and relay panels P252 and P253;
- Between relay panels P252 and P253;
- Between relay panels P252 and P253 and wing/body disconnect area;
- Between left wing/body disconnect area and strut No. 1 and 2; and
- Between right wing/body disconnect area and strut No. 3 and 4.

This service bulletin references the Boeing Standard Wiring Practices Manual, which describes wire installation procedures, and the Boeing 747 Airplane Maintenance Manual (AMM) as additional sources of service information for accomplishment of this modification.

In addition, the FAA has reviewed and approved Boeing Service Bulletin 747–78–2156, dated October 31, 1996, which describes procedures for installation of the following:

- Four additional microswitches and associated wiring in the aisle stand P8 panel;
- Four circuit breakers and associated wiring changes in the P6 panel;
- New relay panels P252 and P253; and
- Left and right wing/body disconnect panel and associated wiring.

Boeing Service Bulletin 747–78–2156 references Boeing Service Bulletin 747–78–2136; and the following Rolls-Royce Service Bulletins:

- RB.211–71–B545, Revision 2, dated August 8, 1997, and RB.211–71–B551, Revision 1, dated March 20, 1998, which describe procedures for the installation of provisions on the engines to accommodate the installation of an additional thrust reverser locking gearbox; and
- RB.211–78–B552, dated June 21, 1996, which describes procedures for installation of an additional thrust reverser locking gearbox.

Accomplishment of Boeing Service Bulletin 747–78–2156 requires prior or

concurrent accomplishment of Boeing Service Bulletin 747–78–2136; and Rolls-Royce Service Bulletins RB.211–71–B545, Revision 2; RB.211–71–B551, Revision 1; and RB.211–78–B552, and eliminates the need for the repetitive inspections and tests specified in Boeing Alert Service Bulletin 747–78A2148, and Boeing Service Bulletin 747–78A2148, Revision 1.

**Explanation of Requirements of the Rule**

Since an unsafe condition has been identified that is likely to exist or develop on other airplanes of the same type design, this AD is being issued to prevent possible failure modes that can result in inadvertent deployment of a thrust reverser during flight and consequent reduced controllability of the airplane. This AD requires repetitive inspections and tests of the thrust reverser system, and corrective actions, if necessary; installation of a terminating modification; and repetitive operational checks of the gearbox locks and the air motor brake following accomplishment of the installation, and repair, if necessary. The actions are required to be accomplished in accordance with the service bulletins described previously, except as discussed below.

This AD also includes a provision for deactivation of one thrust reverser in accordance with Section 78–1 of Boeing Document D6–33391, ''Boeing 747–100/–200/–300/SP Dispatch Deviations Procedures Guide,'' Revision 22, dated January 30, 1998. No more than one reverser on any airplane may be deactivated under the provisions of this document.

This AD also requires repetitive operational checks of the gearbox locks and the air motor brake following accomplishment of Boeing Service Bulletin 747–78–2156. Those checks are required to be performed in accordance with the procedures described in Chapter 78–30–00, Section 5, of the FAA-approved Boeing 747 Airplane Maintenance Manual (AMM).

**Differences Between Service Bulletins and This AD**

Operators should note that, although Boeing Alert Service Bulletin 747–78A2148 and Boeing Service Bulletin 747–78A2148, Revision 1, recommend accomplishing the initial inspection at the next convenient maintenance period, the FAA has determined that such a compliance time would not address the identified unsafe condition in a timely manner. In developing an appropriate compliance time for this AD, the FAA considered not only the manufacturer's recommendation, but the degree of urgency associated with addressing the subject unsafe condition, the average utilization of the affected fleet, and the time necessary to perform the inspections (6 hours per engine). In light of all of these factors, the FAA finds a 90-day compliance time for the initial inspection to be warranted, in that it represents an appropriate interval of time allowable for affected airplanes to continue to operate without compromising safety.

Operators also should note that, although Boeing Service Bulletin 747–78–2156 does not specify any compliance time for accomplishment of the modification, the FAA has determined that this does not address the identified unsafe condition in a timely manner, as described above. The FAA finds a 36-month compliance time for accomplishment of the modification is warranted, in that it represents an appropriate interval of time allowable for affected airplanes to continue to operate without compromising safety.

**Cost Impact**

None of the Model 747 series airplanes affected by this action are on the U.S. Register. All airplanes included in the applicability of this rule currently are operated by non-U.S. operators under foreign registry; therefore, they are not directly affected by this AD action. However, the FAA considers that this rule is necessary to ensure that the unsafe condition is addressed in the event that any of these subject airplanes are imported and placed on the U.S. Register in the future.

Should an affected airplane be imported and placed on the U.S. Register in the future:

It would require approximately 24 work hours (6 work hours per engine) to accomplish the required inspections and tests, at an average labor rate of $60 per work hour. Based on these figures, the cost impact of the inspections and tests required by this AD would be approximately $1,440 per airplane, per inspection/test cycle.

It would require approximately 392 work hours to accomplish the required installation of provisional wiring, at an average labor rate of $60 per work hour. Required parts would cost approximately $22,298 per airplane. Based on these figures, the cost impact of this modification required by this AD would be approximately $45,818 per airplane.

It would require approximately 306 work hours to accomplish the required installation of the locking gearbox, at an average labor rate of $60 per work hour. Required parts would be provided by the manufacturer at no cost to the operators. Based on these figures, the cost impact of the installation required by this AD would be approximately $18,360 per airplane.

It would require approximately 2 work hours to accomplish the required operational check, at an average labor rate of $60 per work hour. Based on these figures, the cost impact of the operational check required by this AD would be approximately $120 per airplane, per check.

**Determination of Rule's Effective Date**

Since this AD action does not affect any airplane that is currently on the U.S. register, it has no adverse economic impact and imposes no additional burden on any person. Therefore, prior notice and public procedures hereon are unnecessary and the amendment may be made effective in less than 30 days after publication in the **Federal Register.**

**Comments Invited**

Although this action is in the form of a final rule and was not preceded by notice and opportunity for public comment, comments are invited on this rule. Interested persons are invited to comment on this rule by submitting such written data, views, or arguments as they may desire. Communications shall identify the Rules Docket number and be submitted in triplicate to the address specified under the caption **ADDRESSES.** All communications received on or before the closing date for comments will be considered, and this rule may be amended in light of the comments received. Factual information that supports the commenter's ideas and suggestions is extremely helpful in evaluating the effectiveness of the AD action and determining whether additional rulemaking action would be needed.

Comments are specifically invited on the overall regulatory, economic, environmental, and energy aspects of the rule that might suggest a need to modify the rule. All comments submitted will be available, both before and after the closing date for comments, in the Rules Docket for examination by interested persons. A report that summarizes each FAA-public contact concerned with the substance of this AD will be filed in the Rules Docket.

Commenters wishing the FAA to acknowledge receipt of their comments submitted in response to this rule must submit a self-addressed, stamped postcard on which the following statement is made: ''Comments to Docket Number 99–NM–77–AD.'' The postcard will be date stamped and returned to the commenter.

## Regulatory Impact

The regulations adopted herein will not have substantial direct effects on the States, on the relationship between the national government and the States, or on the distribution of power and responsibilities among the various levels of government. Therefore, in accordance with Executive Order 12612, it is determined that this final rule does not have sufficient federalism implications to warrant the preparation of a Federalism Assessment.

For the reasons discussed above, I certify that this action (1) is not a ''significant regulatory action'' under Executive Order 12866; (2) is not a ''significant rule'' under DOT Regulatory Policies and Procedures (44 FR 11034, February 26, 1979); and (3) will not have a significant economic impact, positive or negative, on a substantial number of small entities under the criteria of the Regulatory Flexibility Act. A final evaluation has been prepared for this action and it is contained in the Rules Docket. A copy of it may be obtained from the Rules Docket at the location provided under the caption **ADDRESSES.**

## List of Subjects in 14 CFR Part 39

Air transportation, Aircraft, Aviation safety, Incorporation by reference, Safety.

## Adoption of the Amendment

Accordingly, pursuant to the authority delegated to me by the Administrator, the Federal Aviation Administration amends part 39 of the Federal Aviation Regulations (14 CFR part 39) as follows:

## PART 39—AIRWORTHINESS DIRECTIVES

1. The authority citation for part 39 continues to read as follows:

**Authority:** 49 U.S.C. 106(g), 40113, 44701.

### § 39.13 [Amended]

2. Section 39.13 is amended by adding the following new airworthiness directive:

**99–18–03 Boeing:** Amendment 39–11269. Docket 99–NM–77–AD.

*Applicability:* Model 747–100B, –200, –300, and SP series airplanes, equipped with Rolls Royce RB211–524B2, C2, and D4 engines; certificated in any category, as listed in the following service bulletins:

- Boeing Alert Service Bulletin 747–78A2148, dated June 1, 1995;
- Boeing Service Bulletin 747–78A2148, Revision 1, dated July 20, 1995;
- Boeing Service Bulletin 747–78–2136, dated May 11, 1995; and
- Boeing Service Bulletin 747–78–2156, dated October 31, 1996.

**Note 1:** This AD applies to each airplane identified in the preceding applicability provision, regardless of whether it has been modified, altered, or repaired in the area subject to the requirements of this AD. For airplanes that have been modified, altered, or repaired so that the performance of the requirements of this AD is affected, the owner/operator must request approval for an alternative method of compliance in accordance with paragraph (f) of this AD. The request should include an assessment of the effect of the modification, alteration, or repair on the unsafe condition addressed by this AD; and, if the unsafe condition has not been eliminated, the request should include specific proposed actions to address it.

*Compliance:* Required as indicated, unless accomplished previously.

To prevent inadvertent deployment of a thrust reverser during flight and consequent reduced controllability of the airplane, accomplish the following:

**Repetitive Inspections and Tests**

(a) Within 90 days after the effective date of this AD: Perform the applicable inspections and tests of the thrust reverser control and indication system on each engine, in accordance with Part III.A. through III.G. of the Accomplishment Instructions of Boeing Alert Service Bulletin 747–78A2148, dated June 1, 1995, or Boeing Service Bulletin 747–78A2148, Revision 1, dated July 20, 1995. Repeat the applicable inspections and tests thereafter at intervals not to exceed 18 months, until accomplishment of paragraph (c) of this AD.

**Corrective Actions**

(b) If any inspection or test required by paragraph (a) of this AD cannot be successfully performed as specified in the service bulletin, or if any discrepancy is detected during any inspection or test, accomplish paragraphs (b)(1) and (b)(2) of this AD.

(1) Prior to further flight, deactivate the associated thrust reverser in accordance with Section 78–1 of Boeing Document D6–33391, ''Boeing 747–100/–200/–300/SP Dispatch Deviations Procedures Guide,'' Revision 22, dated January 30, 1998. No more than one reverser on any airplane may be deactivated under the provisions of this paragraph.

**Note 2:** The airplane may be operated in accordance with the provisions and limitations specified in the operator's FAA-approved Master Minimum Equipment List (MMEL), provided that no more than one thrust reverser on the airplane is inoperative.

(2) Within 10 days after deactivation of any thrust reverser in accordance with this paragraph, the thrust reverser must be repaired in accordance with Boeing Alert Service Bulletin 747–78A2148, dated June 1, 1995, or Boeing Service Bulletin 767–78A2148, Revision 1, dated July 20, 1995. Additionally, the inspections and tests required by paragraph (a) of this AD must be successfully accomplished as specified in the service bulletin; once this is accomplished, the thrust reverser must then be reactivated.

**Modification**

(c) Within 36 months after the effective date of this AD, install an additional locking system on the thrust reversers in accordance with the Accomplishment Instructions of Boeing Service Bulletin 747–78–2156, dated October 31, 1996. Prior to or concurrent with accomplishment of Boeing Service Bulletin 747–78–2156, dated October 31, 1996: Accomplish Boeing Service Bulletin 747–78–2136, dated May 11, 1995; and Rolls-Royce Service Bulletins RB.211–71-B545, Revision 2, dated August 8, 1997, RB.211–71-B551, Revision 1, dated March 20, 1998, and RB.211–78-B552, dated June 21, 1996. Accomplishment of these actions constitutes terminating action for the repetitive inspections and tests required by paragraph (a) of this AD.

**Operational Checks**

(d) Within 3,000 flight hours after accomplishing the modification required by paragraph (c) of this AD, or within 1,000 flight hours after the effective date of this AD, whichever occurs later: Perform operational checks of the number 2 and number 3 gearbox locks and of the air motor brake, in accordance with the procedures described in Chapter 78–30–00, Section 5, of the FAA-approved Boeing 747 Airplane Maintenance Manual (AMM).

**Corrective Actions**

(e) If any operational check required by paragraph (d) of this AD cannot be successfully performed as specified in the procedures described in Chapter 78–30–00, Section 5, of the AMM, or if any discrepancy is detected during any operational check, accomplish paragraphs (e)(1) and (e)(2) of this AD. Repeat the operational checks thereafter at intervals not to exceed 3,000 flight hours.

(1) Prior to further flight, deactivate the associated thrust reverser in accordance with Section 78–1 of Boeing Document D6–33391, ''Boeing 747–100/-200/-300/SP Dispatch Deviations Procedures Guide,'' Revision 22, dated January 30, 1998. No more than one reverser on any airplane may be deactivated under the provisions of this paragraph.

**Note 3:** The airplane may be operated in accordance with the provisions and limitations specified in the operator's FAA-approved MMEL, provided that no more than one thrust reverser on the airplane is inoperative.

(2) Within 10 days after deactivation of any thrust reverser in accordance with this paragraph, the thrust reverser must be repaired in accordance the AMM. Additionally, the operational checks required by paragraph (d) of this AD must be successfully accomplished as specified in the AMM; once this is accomplished, the thrust reverser must then be reactivated.

**Alternative Methods of Compliance**

(f) An alternative method of compliance or adjustment of the compliance time that provides an acceptable level of safety may be used if approved by the Manager, Seattle Aircraft Certification Office (ACO), FAA, Transport Airplane Directorate. Operators shall submit their requests through an appropriate FAA Principal Maintenance Inspector, who may add comments and then send it to the Manager, Seattle ACO.

**Note 4:** Information concerning the existence of approved alternative methods of compliance with this AD, if any, may be obtained from the Seattle ACO.

**Special Flight Permits**

(g) Special flight permits may be issued in accordance with sections 21.197 and 21.199 of the Federal Aviation Regulations (14 CFR 21.197 and 21.199) to operate the airplane to a location where the requirements of this AD can be accomplished.

**Incorporation by Reference**

(h) Except as provided by paragraphs (b)(1), (d), (e), (e)(1), and (e)(2) of this AD, the actions shall be done in accordance with the applicable service bulletins, which contain the specified list of effective pages:

| Service bulletin referenced and date | Page No. shown on page | Revision level shown on page | Date shown on page |
|---|---|---|---|
| Boeing 747–78–2136, May 11, 1995 | 1–161 | Original | May 11, 1995. |
| Boeing 747–78A2148, June 1, 1995 | 1–50 | Original | June 1, 1995. |
| Boeing 747–78A2148, Revision 1, July 20, 1995 | 1–50 | 1 | July 20, 1995. |
| Boeing 747–78–2156, October 31, 1996 | 1–283 | Original | October 31, 1996. |
| Rolls-Royce, RB.211–78–B552 June 21, 1996 | 1–33 | Original | June 21, 1996. |
| **Supplement** | | | |
| Rolls-Royce, RB.211-71-B545, Revision 2, August 8, 1997 | 1, 2 | Original | June 21, 1996. |
| | 1, 4 | 2 | August 8, 1997. |
| | 2, 3, 5–45 | Original | December 22, 1995. |
| **Supplement** | | | |
| Rolls-Royce, RB.211–71–B551, Revision 1, March 20, 1998 | 1, 2 | 2 | August 8, 1997. |
| | 1, 5, 85 | 1 | March 20, 1998. |
| | 2–4, 6–84, 86–106 | Original | June 21, 1996. |
| **Supplement** | | | |
| | 1–5 | 1 | March 20, 1998. |

This incorporation by reference was approved by the Director of the **Federal Register** in accordance with 5 U.S.C. 552(a) and 1 CFR part 51. Copies may be obtained from Boeing Commercial Airplane Group, P.O. Box 3707, Seattle, Washington 98124–2207. Copies may be inspected at the FAA, Transport Airplane Directorate, 1601 Lind Avenue, SW., Renton, Washington; or at the Office of the **Federal Register**, 800 North Capitol Street, NW., suite 700, Washington, DC.

(i) This amendment becomes effective on September 15, 1999.

Issued in Renton, Washington, on August 19, 1999.

**Vi L. Lipski,**

*Acting Manager, Transport Airplane Directorate, Aircraft Certification Service.*

[FR Doc. 99–22193 Filed 8–30–99; 8:45 am]

BILLING CODE 4910–13–U

## DEPARTMENT OF TRANSPORTATION

## Federal Aviation Administration

## 14 CFR Part 39

**[Docket No. 98–NM–369–AD; Amendment 39–11276; AD 99–18–10]**

**RIN 2120–AA64**

## Airworthiness Directives; Short Brothers Model SD3–SHERPA, SD3–60 SHERPA, SD3–30, and SD3–60 Series Airplanes

**AGENCY:** Federal Aviation Administration, DOT.

**ACTION:** Final rule.

**SUMMARY:** This amendment adopts a new airworthiness directive (AD), applicable to all Short Brothers Model SD3–SHERPA, SD3–60 SHERPA, SD3–30, and SD3–60 series airplanes, that requires a one-time detailed visual inspection of the emergency brake accumulator mounting structure for evidence of cracking; and corrective action, if necessary. This amendment is prompted by issuance of mandatory continuing airworthiness information by a foreign civil airworthiness authority. The actions specified by this AD are intended to prevent failure of the mounting angle that supports the emergency brake system due to cracking, which could result in loss of the emergency brake system.

**DATES:** Effective October 5, 1999.

The incorporation by reference of certain publications listed in the regulations is approved by the Director of the Federal Register as of October 5, 1999.

**ADDRESSES:** The service information referenced in this AD may be obtained from Short Brothers, Airworthiness & Engineering Quality, P.O. Box 241, Airport Road, Belfast BT3 9DZ, Northern Ireland. This information may be examined at the Federal Aviation Administration (FAA), Transport Airplane Directorate, Rules Docket, 1601 Lind Avenue, SW., Renton, Washington; or at the Office of the Federal Register, 800 North Capitol Street, NW., suite 700, Washington, DC.

**FOR FURTHER INFORMATION CONTACT:** Norman B. Martenson, Manager, International Branch, ANM–116, FAA, Transport Airplane Directorate, 1601 Lind Avenue, SW., Renton, Washington 98055–4056; telephone (425) 227–2110; fax (425) 227–1149.

**SUPPLEMENTARY INFORMATION:** A proposal to amend part 39 of the Federal Aviation Regulations (14 CFR part 39) to include an airworthiness directive (AD) that is applicable to all Short Brothers Model SD3–SHERPA, SD3–60 SHERPA, SD3–30, and SD3–60 series airplanes was published in the **Federal Register** on June 28, 1999 (64 FR 34575). That action proposed to require a one-time visual inspection of the emergency brake accumulator mounting structure for evidence of cracking; and corrective action, if necessary.

### Comments

Interested persons have been afforded an opportunity to participate in the making of this amendment. No comments were submitted in response to the proposal or the FAA's determination of the cost to the public.

### Explanation of Change Made to Proposal

The FAA has added a note to the final rule to clarify the definition of a detailed visual inspection.

## Conclusion

The FAA has determined that air safety and the public interest require the adoption of the rule with the change previously described. The FAA has determined that this change will neither increase the economic burden on any operator nor increase the scope of the AD.

## Interim Action

This is considered to be interim action until final action is identified, at which time the FAA may consider further rulemaking.

## Cost Impact

The FAA estimates that 56 airplanes of U.S. registry will be affected by this AD, that it will take approximately 1 work hour per airplane to accomplish the required inspection, and that the average labor rate is $60 per work hour. Based on these figures, the cost impact of the required AD on U.S. operators is estimated to be $3,360, or $60 per airplane.

The cost impact figure discussed above is based on assumptions that no operator has yet accomplished any of the requirements of this AD action, and that no operator would accomplish those actions in the future if this AD were not adopted.

## Regulatory Impact

The regulations adopted herein will not have substantial direct effects on the States, on the relationship between the national government and the States, or on the distribution of power and responsibilities among the various levels of government.

Therefore, in accordance with Executive Order 12612, it is determined that this final rule does not have sufficient federalism implications to warrant the preparation of a Federalism Assessment.

For the reasons discussed above, I certify that this action (1) is not a ''significant regulatory action'' under Executive Order 12866; (2) is not a ''significant rule'' under DOT Regulatory Policies and Procedures (44 FR 11034, February 26, 1979); and (3) will not have a significant economic impact, positive or negative, on a substantial number of small entities under the criteria of the Regulatory Flexibility Act. A final evaluation has been prepared for this action and it is contained in the Rules Docket. A copy of it may be obtained from the Rules Docket at the location provided under the caption **ADDRESSES**.

## List of Subjects in 14 CFR Part 39

Air transportation, Aircraft, Aviation safety, Incorporation by reference, Safety.

## Adoption of the Amendment

Accordingly, pursuant to the authority delegated to me by the Administrator, the Federal Aviation Administration amends part 39 of the Federal Aviation Regulations (14 CFR part 39) as follows:

## PART 39—AIRWORTHINESS DIRECTIVES

1. The authority citation for part 39 continues to read as follows:

**Authority:** 49 U.S.C. 106(g), 40113, 44701.

### § 39.13 [Amended]

2. Section 39.13 is amended by adding the following new airworthiness directive:

**99–18–10 Short Brothers PLC:** Amendment 39–11276. Docket 98–NM–369–AD.

*Applicability:* All Model SD3–SHERPA, SD3–60 SHERPA, SD3–30, and SD3–60 series airplanes, certificated in any category.

**Note 1:** This AD applies to each airplane identified in the preceding applicability provision, regardless of whether it has been modified, altered, or repaired in the area subject to the requirements of this AD. For airplanes that have been modified, altered, or repaired so that the performance of the requirements of this AD is affected, the owner/operator must request approval for an alternative method of compliance in accordance with paragraph (c) of this AD. The request should include an assessment of the effect of the modification, alteration, or repair on the unsafe condition addressed by this AD; and, if the unsafe condition has not been eliminated, the request should include specific proposed actions to address it.

*Compliance:* Required as indicated, unless accomplished previously.

To prevent failure of the mounting angle that supports the emergency brake system due to cracking, which could result in loss of the emergency brake system, accomplish the following:

**Inspection**

(a) Within 3 months after the effective date of this AD, perform a detailed visual inspection of the emergency brake accumulator mounting angle for evidence of cracking in accordance with Shorts Service Bulletin SD3 SHERPA–29–2 (for Model SD3–SHERPA series airplanes); SD360 SHERPA–29–1 (for Model SD3–60 SHERPA series airplanes); SD330–29–19 (for Model SD3–30 series airplanes); or SD360–29–06 (for Model SD3–60 series airplanes); all dated October 22, 1998; as applicable. If any cracking is found, prior to further flight, remove and replace the mounting angle with a new or serviceable part in accordance with the applicable service bulletin.

**Note 2:** For the purposes of this AD, a detailed visual inspection is defined as: ''An intensive visual examination of a specific structural area, system, installation, or assembly to detect damage, failure, or irregularity. Available lighting is normally supplemented with a direct source of good lighting at intensity deemed appropriate by the inspector. Inspection aids such as mirror, magnifying lenses, etc., may be used. Surface cleaning and elaborate access procedures may be required.''

**Reporting**

(b) Within 10 days after accomplishing the inspection required by paragraph (a) of this AD, submit a report of the inspection results (both positive and negative findings) to Short Brothers PLC, Mel Smith, Team Leader Customer Support, facsimile number: 44–1232–733024. Information collection requirements contained in this regulation have been approved by the Office of Management and Budget (OMB) under the provisions of the Paperwork Reduction Act of 1980 (44 U.S.C. 3501 *et seq.*) and have been assigned OMB Control Number 2120–0056.

**Alternative Methods of Compliance**

(c) An alternative method of compliance or adjustment of the compliance time that provides an acceptable level of safety may be used if approved by the Manager, International Branch, ANM–116, FAA, Transport Airplane Directorate. Operators shall submit their requests through an appropriate FAA Principal Maintenance Inspector, who may add comments and then send it to the Manager, International Branch, ANM–116.

**Note 3:** Information concerning the existence of approved alternative methods of compliance with this AD, if any, may be obtained from the International Branch, ANM–116.

**Special Flight Permits**

(d) Special flight permits may be issued in accordance with sections 21.197 and 21.199 of the Federal Aviation Regulations (14 CFR 21.197 and 21.199) to operate the airplane to a location where the requirements of this AD can be accomplished.

**Incorporation by Reference**

(e) The inspection and replacement shall be done in accordance with Shorts Service Bulletin SD3 SHERPA–29–2, dated October 22, 1998; Shorts Service Bulletin SD360 SHERPA–29–1, dated October 22, 1998; Shorts Service Bulletin SD330–29–19, dated October 22, 1998; or Shorts Service Bulletin SD360–29–06, dated October 22, 1998; as applicable. This incorporation by reference was approved by the Director of the Federal Register in accordance with 5 U.S.C. 552(a) and 1 CFR part 51. Copies may be obtained from Short Brothers, Airworthiness & Engineering Quality, P.O. Box 241, Airport Road, Belfast BT3 9DZ, Northern Ireland. Copies may be inspected at the FAA, Transport Airplane Directorate, 1601 Lind Avenue, SW., Renton, Washington; or at the Office of the Federal Register, 800 North Capitol Street, NW., suite 700, Washington, DC.

**Note 4:** The subject of this AD is addressed in British airworthiness directives 009–10–98, 011–10–98, 008–10–98, and 010–10–98.

(f) This amendment becomes effective on October 5, 1999.

Issued in Renton, Washington, on August 23, 1999.

**Vi L. Lipski,**

*Acting Manager, Transport Airplane Directorate, Aircraft Certification Service.*

[FR Doc. 99–22385 Filed 8–30–99; 8:45 am]

BILLING CODE 4910–13–U

---

## DEPARTMENT OF TRANSPORTATION

## Federal Aviation Administration

## 14 CFR Part 39

**[Docket No. 98–NM–349–AD; Amendment 39–11275; AD 99–18–09]**

**RIN 2120–AA64**

## Airworthiness Directives; Short Brothers Model SD3–30 Series Airplanes

**AGENCY:** Federal Aviation Administration, DOT.

**ACTION:** Final rule.

**SUMMARY:** This amendment adopts a new airworthiness directive (AD), applicable to certain Short Brothers Model SD3–30 series airplanes, that requires modification of electrical wiring associated with heater components. This amendment is prompted by issuance of mandatory continuing airworthiness information by a foreign civil airworthiness authority. The actions specified by this AD are intended to prevent failure of the autofeather system, which could result in reduced controllability of the airplane in the event of engine failure during takeoff.

**DATES:** Effective October 5, 1999.

The incorporation by reference of certain publications listed in the regulations is approved by the Director of the Federal Register as of October 5, 1999.

**ADDRESSES:** The service information referenced in this AD may be obtained from Short Brothers, Airworthiness & Engineering Quality, P.O. Box 241, Airport Road, Belfast BT3 9DZ, Northern Ireland. This information may be examined at the Federal Aviation Administration (FAA), Transport Airplane Directorate, Rules Docket, 1601 Lind Avenue, SW., Renton, Washington; or at the Office of the **Federal Register**, 800 North Capitol Street, NW., suite 700, Washington, DC.

**FOR FURTHER INFORMATION CONTACT:** Norman B. Martenson, Manager, International Branch, ANM–116, FAA, Transport Airplane Directorate, 1601 Lind Avenue, SW., Renton, Washington 98055–4056; telephone (425) 227–2110; fax (425) 227–1149.

**SUPPLEMENTARY INFORMATION:** A proposal to amend part 39 of the Federal Aviation Regulations (14 CFR part 39) to include an airworthiness directive (AD) that is applicable to certain Short Brothers Model SD3–30 series airplanes was published in the **Federal Register** on June 28, 1999 (64 FR 34577). That action proposed to require modification of electrical wiring associated with heater components.

### Comments

Interested persons have been afforded an opportunity to participate in the making of this amendment. No comments were submitted in response to the proposal or the FAA's determination of the cost to the public.

### Conclusion

The FAA has determined that air safety and the public interest require the adoption of the rule as proposed.

### Cost Impact

The FAA estimates that 27 airplanes of U.S. registry will be affected by this AD, that it will take approximately 6 work hours per airplane to accomplish the required actions and that the average labor rate is $60 per work hour. The cost for required parts will be minimal. Based on these figures, the cost impact of this AD on U.S. operators is estimated to be $9,720, or $360 per airplane.

The cost impact figure discussed above is based on assumptions that no operator has yet accomplished any of the requirements of this AD action, and that no operator would accomplish those actions in the future if this AD were not adopted.

### Regulatory Impact

The regulations adopted herein will not have substantial direct effects on the States, on the relationship between the national government and the States, or on the distribution of power and responsibilities among the various levels of government. Therefore, in accordance with Executive Order 12612, it is determined that this final rule does not have sufficient federalism implications to warrant the preparation of a Federalism Assessment.

For the reasons discussed above, I certify that this action (1) is not a ''significant regulatory action'' under Executive Order 12866; (2) is not a ''significant rule'' under DOT Regulatory Policies and Procedures (44 FR 11034, February 26, 1979); and (3) will not have a significant economic impact, positive or negative, on a substantial number of small entities under the criteria of the Regulatory Flexibility Act. A final evaluation has been prepared for this action and it is contained in the Rules Docket. A copy of it may be obtained from the Rules Docket at the location provided under the caption **ADDRESSES.**

### List of Subjects in 14 CFR Part 39

Air transportation, Aircraft, Aviation safety, Incorporation by reference, Safety.

### Adoption of the Amendment

Accordingly, pursuant to the authority delegated to me by the Administrator, the Federal Aviation Administration amends part 39 of the Federal Aviation Regulations (14 CFR part 39) as follows:

## PART 39—AIRWORTHINESS DIRECTIVES

1. The authority citation for part 39 continues to read as follows:

**Authority:** 49 U.S.C. 106(g), 40113, 44701.

**§ 39.13 [Amended]**

2. Section 39.13 is amended by adding the following new airworthiness directive:

**99–18–09 Short Brothers PLC:** Amendment 39–11275. Docket 98–NM–349–AD.

*Applicability:* Model SD3–30 series airplanes that have been modified in accordance with Shorts Service Bulletin SD330–30–30, dated June 1988; certificated in any category.

**Note 1:** This AD applies to each airplane identified in the preceding applicability provision, regardless of whether it has been otherwise modified, altered, or repaired in the area subject to the requirements of this AD. For airplanes that have been modified, altered, or repaired so that the performance of the requirements of this AD is affected, the owner/operator must request approval for an alternative method of compliance in accordance with paragraph (b) of this AD. The request should include an assessment of the effect of the modification, alteration, or repair on the unsafe condition addressed by this AD; and, if the unsafe condition has not been eliminated, the request should include specific proposed actions to address it.

*Compliance:* Required as indicated, unless accomplished previously.

To prevent failure of the autofeather system, which could result in reduced controllability of the airplane in the event of engine failure during takeoff, accomplish the following:

**Required Modification**

(a) Within 60 days after the effective date of this AD, modify electrical wiring associated with component heaters in accordance with Shorts Service Bulletin SD330–30–33, dated June 1998.

**Note 2:** Shorts Service Bulletin SD330–30–33, dated June 1998, references Shorts

Service Bulletin SD330–30–30, Revision 1, dated September 1997, as an additional source of service information for modifying the electrical wiring and removing equipment associated with component heaters. Operators should note that Shorts Service Bulletin SD330–30–30, Revision 1, dated September 1997, requires that Pratt & Whitney Service Bulletin No. 3222, Revision No. 2, be incorporated prior to or in conjunction with the service bulletin.

**Alternative Methods of Compliance**

(b) An alternative method of compliance or adjustment of the compliance time that provides an acceptable level of safety may be used if approved by the Manager, International Branch, ANM–116, FAA, Transport Airplane Directorate. Operators shall submit their requests through an appropriate FAA Principal Maintenance Inspector, who may add comments and then send it to the Manager, International Branch, ANM–116.

**Note 3:** Information concerning the existence of approved alternative methods of compliance with this AD, if any, may be obtained from the International Branch, ANM–116.

**Special Flight Permits**

(c) Special flight permits may be issued in accordance with sections 21.197 and 21.199 of the Federal Aviation Regulations (14 CFR 21.197 and 21.199) to operate the airplane to a location where the requirements of this AD can be accomplished.

**Incorporation by Reference**

(d) The modification shall be done in accordance with Shorts Service Bulletin SD330–30–33, dated June 1998. This incorporation by reference was approved by the Director of the **Federal Register** in accordance with 5 U.S.C. 552(a) and 1 CFR part 51. Copies may be obtained from Short Brothers, Airworthiness & Engineering Quality, P.O. Box 241, Airport Road, Belfast BT3 9DZ, Northern Ireland. Copies may be inspected at the FAA, Transport Airplane Directorate, 1601 Lind Avenue, SW., Renton, Washington; or at the Office of the **Federal Register**, 800 North Capitol Street, NW., suite 700, Washington, DC.

**Note 4:** The subject of this AD is addressed in British airworthiness directive 003–06–98.

(e) This amendment becomes effective on October 5, 1999.

Issued in Renton, Washington, on August 23, 1999.

**Vi L. Lipski,**

*Acting Manager, Transport Airplane Directorate, Aircraft Certification Service.*

[FR Doc. 99–22386 Filed 8–30–99; 8:45 am]

BILLING CODE 4910–13–U

## DEPARTMENT OF TRANSPORTATION

## Federal Aviation Administration

## 14 CFR Part 39

**[Docket No. 98–NM–332–AD; Amendment 39–11274; AD 99–18–08]**

**RIN 2120–AA64**

## Airworthiness Directives; Israel Aircraft Industries, Ltd. (IAI), Model 1124 and 1124A Series Airplanes

**AGENCY:** Federal Aviation Administration, DOT.

**ACTION:** Final rule.

**SUMMARY:** This amendment adopts a new airworthiness directive (AD), applicable to all IAI Model 1124 and 1124A series airplanes, that requires installation of an independent circuit breaker and associated wiring changes for the hydraulic low pressure warning lights. This amendment is prompted by issuance of mandatory continuing airworthiness information by a foreign civil airworthiness authority. The actions specified by this AD are intended to prevent loss of the hydraulic low pressure warning lights. Low pressure in the hydraulic system can result in reduced controllability of the airplane.

**DATES:** Effective October 5, 1999.

The incorporation by reference of certain publications listed in the regulations is approved by the Director of the Federal Register as of October 5, 1999.

**ADDRESSES:** The service information referenced in this AD may be obtained from Galaxy Aerospace Corporation, One Galaxy Way, Fort Worth Alliance Airport, Fort Worth, Texas 76177. This information may be examined at the Federal Aviation Administration (FAA), Transport Airplane Directorate, Rules Docket, 1601 Lind Avenue, SW., Renton, Washington; or at the Office of the Federal Register, 800 North Capitol Street, NW., suite 700, Washington, DC.

**FOR FURTHER INFORMATION CONTACT:** Norman B. Martenson, Manager, International Branch, ANM–116, FAA, Transport Airplane Directorate, 1601 Lind Avenue, SW., Renton, Washington 98055–4056; telephone (425) 227–2110; fax (425) 227–1149.

**SUPPLEMENTARY INFORMATION:** A proposal to amend part 39 of the Federal Aviation Regulations (14 CFR part 39) to include an airworthiness directive (AD) that is applicable to all IAI Model 1124 and 1124A series airplanes was published in the **Federal Register** on July 7, 1999 (64 FR 36628). That action proposed to require installation of an independent circuit breaker and associated wiring changes for the hydraulic low pressure warning lights.

**Comments**

Interested persons have been afforded an opportunity to participate in the making of this amendment. No comments were submitted in response to the proposal or the FAA's determination of the cost to the public.

**Conclusion**

The FAA has determined that air safety and the public interest require the adoption of the rule as proposed.

**Cost Impact**

The FAA estimates that 218 airplanes of U.S. registry will be affected by this AD, that it will take approximately 6 work hours per airplane to accomplish the required modification, and that the average labor rate is $60 per work hour. Required parts will cost approximately $142 per airplane. Based on these figures, the cost impact of this AD on U.S. operators is estimated to be $109,436, or $502 per airplane.

The cost impact figure discussed above is based on assumptions that no operator has yet accomplished any of the requirements of this AD action, and that no operator would accomplish those actions in the future if this AD were not adopted.

**Regulatory Impact**

The regulations adopted herein will not have substantial direct effects on the States, on the relationship between the national government and the States, or on the distribution of power and responsibilities among the various levels of government. Therefore, in accordance with Executive Order 12612, it is determined that this final rule does not have sufficient federalism implications to warrant the preparation of a Federalism Assessment.

For the reasons discussed above, I certify that this action (1) is not a ''significant regulatory action'' under Executive Order 12866; (2) is not a ''significant rule'' under DOT Regulatory Policies and Procedures (44 FR 11034, February 26, 1979); and (3) will not have a significant economic impact, positive or negative, on a substantial number of small entities under the criteria of the Regulatory Flexibility Act. A final evaluation has been prepared for this action and it is contained in the Rules Docket. A copy of it may be obtained from the Rules Docket at the location provided under the caption **ADDRESSES.**

### List of Subjects in 14 CFR Part 39

Air transportation, Aircraft, Aviation safety, Incorporation by reference, Safety.

### Adoption of the Amendment

Accordingly, pursuant to the authority delegated to me by the Administrator, the Federal Aviation Administration amends part 39 of the Federal Aviation Regulations (14 CFR part 39) as follows:

## PART 39—AIRWORTHINESS DIRECTIVES

1. The authority citation for part 39 continues to read as follows:

**Authority:** 49 U.S.C. 106(g), 40113, 44701.

**§ 39.13 [Amended]**

2. Section 39.13 is amended by adding the following new airworthiness directive:

**99–18–08 Israel Aircraft Industries, Ltd.:** Amendment 39–11274. Docket 98–NM–332–AD.

*Applicability:* All Model 1124 and 1124A series airplanes, certificated in any category.

**Note 1:** This AD applies to each airplane identified in the preceding applicability provision, regardless of whether it has been modified, altered, or repaired in the area subject to the requirements of this AD. For airplanes that have been modified, altered, or repaired so that the performance of the requirements of this AD is affected, the owner/operator must request approval for an alternative method of compliance in accordance with paragraph (b) of this AD. The request should include an assessment of the effect of the modification, alteration, or repair on the unsafe condition addressed by this AD; and, if the unsafe condition has not been eliminated, the request should include specific proposed actions to address it.

*Compliance:* Required as indicated, unless accomplished previously.

To prevent loss of the hydraulic low pressure warning lights which could result in unknown low pressure in the hydraulic system and consequent reduced controllability of the airplane accomplish the following:

(a) Within 400 hours time-in-service or 1 year after the effective date of this AD, whichever occurs first: Install an independent circuit breaker and associated wiring changes for the hydraulic low pressure warning lights, in accordance with IAI 1124-Westwind Alert Service Bulletin 1124–29A–140, dated August 15, 1998.

### Alternative Methods of Compliance

(b) An alternative method of compliance or adjustment of the compliance time that provides an acceptable level of safety may be used if approved by the Manager, International Branch, ANM–116, FAA, Transport Airplane Directorate. Operators shall submit their requests through an appropriate FAA Principal Maintenance Inspector, who may add comments and then send it to the Manager, International Branch, ANM–116.

**Note 2:** Information concerning the existence of approved alternative methods of compliance with this AD, if any, may be obtained from the International Branch, ANM–116.

### Special Flight Permits

(c) Special flight permits may be issued in accordance with sections 21.197 and 21.199 of the Federal Aviation Regulations (14 CFR 21.197 and 21.199) to operate the airplane to a location where the requirements of this AD can be accomplished.

### Incorporation by Reference

(d) The installation shall be done in accordance with IAI 1124-Westwind Alert Service Bulletin 1124–29A–140, dated August 15, 1998. This incorporation by reference was approved by the Director of the Federal Register in accordance with 5 U.S.C. 552(a) and 1 CFR part 51. Copies may be obtained from Galaxy Aerospace Corporation, One Galaxy Way, Fort Worth Alliance Airport, Fort Worth, Texas 76177. Copies may be inspected at the FAA, Transport Airplane Directorate, 1601 Lind Avenue, SW., Renton, Washington; or at the Office of the Federal Register, 800 North Capitol Street, NW., suite 700, Washington, DC.

**Note 3:** The subject of this AD is addressed in Israeli airworthiness directive 29–98–09–01, dated September 23, 1998.

(e) This amendment becomes effective on October 5, 1999.

Issued in Renton, Washington, on August 23, 1999.

**Vi L. Lipski,**

*Acting Manager, Transport Airplane Directorate, Aircraft Certification Service.*

[FR Doc. 99–22387 Filed 8–30–99; 8:45 am]

BILLING CODE 4910–13–U

---

## DEPARTMENT OF TRANSPORTATION

## Federal Aviation Administration

## 14 CFR Part 39

**[Docket No. 98–NM–222–AD; Amendment 39–11273; AD 99–18–07]**

**RIN 2120–AA64**

## Airworthiness Directives; Boeing Model 747–400 Series Airplanes

**AGENCY:** Federal Aviation Administration, DOT.

**ACTION:** Final rule.

**SUMMARY:** This amendment adopts a new airworthiness directive (AD), applicable to certain Boeing Model 747–400 series airplanes, that requires installation of strap assemblies on the ceiling panels and rails that support the video monitors. This amendment is prompted by reports of the video monitor ceiling panels falling into the cabin area due to the failure of certain latch assemblies during turbulence. The actions specified by this AD are intended to prevent ceiling panels from falling into the passenger area in the event of failure of certain latch assemblies on the ceiling panels, which could result in consequent injury to the crew and passengers.

**DATES:** Effective October 5, 1999.

The incorporation by reference of certain publications listed in the regulations is approved by the Director of the Federal Register as of October 5, 1999.

**ADDRESSES:** The service information referenced in this AD may be obtained from Boeing Commercial Airplane Group, P.O. Box 3707, Seattle, Washington 98124–2207. This information may be examined at the Federal Aviation Administration (FAA), Transport Airplane Directorate, Rules Docket, 1601 Lind Avenue, SW., Renton, Washington; or at the Office of the Federal Register, 800 North Capitol Street, NW., suite 700, Washington, DC.

**FOR FURTHER INFORMATION CONTACT:** Jan Risheim, Aerospace Engineer, Airframe Branch, ANM–120S, FAA, Transport Airplane Directorate, Seattle Aircraft Certification Office, 1601 Lind Avenue, SW., Renton, Washington 98055–4056; telephone (425) 227–1675; fax (425) 227–1181.

**SUPPLEMENTARY INFORMATION:** A proposal to amend part 39 of the Federal Aviation Regulations (14 CFR part 39) to include an airworthiness directive (AD) that is applicable to certain Boeing Model 747–400 series airplanes was published in the **Federal Register** on November 9, 1998 (63 FR 60222). That action proposed to require installation of strap assemblies on the ceiling panels and rails that support the video monitors.

### Comments

Interested persons have been afforded an opportunity to participate in the making of this amendment. Due consideration has been given to the comments received.

One commenter states that the proposed AD is not applicable to any airplane in its fleet and offers no further comment.

### Request To Revise Language of Unsafe Condition

One commenter, the manufacturer, requests that the language used to describe the unsafe condition be revised to more accurately reflect the intent of the service bulletin. In the body of the proposal, the statement of the unsafe condition reads, ''To prevent failure of

certain latch assemblies on the ceiling panels, which could cause the ceiling panels to fall into the cabin area, and consequent injury to the crew and passengers, accomplish the following.'' The commenter states that the strap assemblies installed in accordance with the service bulletin ''* * * are not intended to, and will not, prevent failure of the latch assemblies. The function of the strap assemblies is to prevent the panels from falling in the event that the latches do fail.''

The FAA concurs with the commenter's request. Therefore, the statement of unsafe condition has been revised accordingly in both the ''Summary'' and ''Compliance'' sections of the final rule.

**Request To Reduce Cost Estimate**

One commenter, the manufacturer, requests that the estimated number of work hours be reduced from the 476 work hours stated in the proposal. The commenter points out that, in Boeing Service Bulletin 747–25A3142, Revision 1, dated August 6, 1998, the estimated number of work hours necessary for the installation of strap assemblies on the ceiling panels is reduced from 34 work hours per panel (as stated in the original issue of the service bulletin, dated October 16, 1997) to 9 work hours per panel. Furthermore, the commenter states that the number of work hours that would be necessary for the proposed actions to be accomplished on an airplane ranges from a minimum of 18 work hours (2 panels at 9 work hours each) to a maximum of 126 work hours (14 panels at 9 work hours each). Similarly, the commenter states that the estimated cost of parts ranges from $1,366 to $9,575, depending on the number of ceiling panels that need to be modified.

The FAA concurs with the commenter's request to reduce the estimated number of work hours. Though the commenter does not make a specific request with regard to the range of minimum-to-maximum work hours and parts costs, the FAA infers that the commenter wants the cost impact section of the proposal to be revised to reflect the range of costs rather than the maximum cost only. The FAA concurs with this request, and the ''Cost Impact'' section of this final rule has been revised accordingly.

**Request To Increase Compliance Time**

One commenter requests that the proposed compliance time for accomplishment of the installation of strap assemblies be increased from 24 to 36 months to minimize impact on its operations.

The FAA does not concur with the commenter's request. In developing an appropriate compliance time for this action, the FAA considered the safety implications and normal operator maintenance schedules. The 24-month compliance time was chosen to ensure that affected airplanes complete one required major maintenance period (''C'' check) during the proposed compliance time. The FAA finds that the 24-month compliance time represents an appropriate interval of time allowable wherein the installation can be accomplished during scheduled maintenance intervals for the majority of affected operators, and an acceptable level of safety can be maintained. No change to the final rule is necessary in this regard.

**Request To Decrease Compliance Time**

One commenter recommends that the proposed compliance time for accomplishment of the installation of strap assemblies be reduced from 24 to 12 months. The commenter states that a compliance time of 12 months would better ensure the safety of the traveling public. The commenter also suggests that a requirement to block seats in the ''drop zone'' would be another option to ensure passenger safety.

The FAA does not concur with the commenter's request. As explained above, in establishing a compliance time for the proposed requirement, the FAA considered the safety implications and normal maintenance schedules for affected operators. The FAA finds that 24 months represents an appropriate interval of time allowable for the operators to continue to operate the affected airplanes, while not affecting the safety of the flight crew or passengers. The FAA also finds that reducing the compliance time from 24 to 12 months or requiring blockage of seats would add an additional burden on operators and require issuance of a supplemental NPRM and reopening of the public comment period. The FAA finds that, considering the safety implications associated with the identified unsafe condition, it would be inappropriate to delay the issuance of the rule in this way. No change to the final rule is necessary in this regard.

**Conclusion**

After careful review of the available data, including the comments noted above, the FAA has determined that air safety and the public interest require the adoption of the rule with the changes described previously. The FAA has determined that these changes will neither increase the economic burden on any operator nor increase the scope of the AD.

**Cost Impact**

There are approximately 280 airplanes of the affected design in the worldwide fleet. The FAA estimates that 40 airplanes of U.S. registry will be affected by this AD.

It will take approximately 9 work hours per ceiling panel, and between 18 and 126 work hours per airplane, to accomplish the required installation, at an average labor rate of $60 per work hour. Required parts will cost between $1,366 and $9,575 per airplane. Based on these figures, the cost impact of the installation required by this AD on U.S. operators is estimated to be between $2,446 and $17,135 per airplane.

The cost impact figure discussed above is based on assumptions that no operator has yet accomplished any of the proposed requirements of this AD action, and that no operator would accomplish those actions in the future if this AD were not adopted.

**Regulatory Impact**

The regulations adopted herein will not have substantial direct effects on the States, on the relationship between the national government and the States, or on the distribution of power and responsibilities among the various levels of government. Therefore, in accordance with Executive Order 12612, it is determined that this final rule does not have sufficient federalism implications to warrant the preparation of a Federalism Assessment.

For the reasons discussed above, I certify that this action (1) is not a ''significant regulatory action'' under Executive Order 12866; (2) is not a ''significant rule'' under DOT Regulatory Policies and Procedures (44 FR 11034, February 26, 1979); and (3) will not have a significant economic impact, positive or negative, on a substantial number of small entities under the criteria of the Regulatory Flexibility Act. A final evaluation has been prepared for this action and it is contained in the Rules Docket. A copy of it may be obtained from the Rules Docket at the location provided under the caption **ADDRESSES.**

**List of Subjects in 14 CFR Part 39**

Air transportation, Aircraft, Aviation safety, Incorporation by reference, Safety.

**Adoption of the Amendment**

Accordingly, pursuant to the authority delegated to me by the Administrator, the Federal Aviation Administration amends part 39 of the

Federal Aviation Regulations (14 CFR part 39) as follows:

## PART 39—AIRWORTHINESS DIRECTIVES

1. The authority citation for part 39 continues to read as follows:

**Authority:** 49 U.S.C. 106(g), 40113, 44701.

### § 39.13 [Amended]

2. Section 39.13 is amended by adding the following new airworthiness directive:

**99–18–07 Boeing:** Amendment 39–11273. Docket 98–NM–222–AD.

*Applicability:* Model 747–400 series airplanes, as listed in Boeing Alert Service Bulletin 747–25A3142, Revision 1, dated August 6, 1998, certificated in any category.

**Note 1:** This AD applies to each airplane identified in the preceding applicability provision, regardless of whether it has been modified, altered, or repaired in the area subject to the requirements of this AD. For airplanes that have been modified, altered, or repaired so that the performance of the requirements of this AD is affected, the owner/operator must request approval for an alternative method of compliance in accordance with paragraph (b) of this AD. The request should include an assessment of the effect of the modification, alteration, or repair on the unsafe condition addressed by this AD; and, if the unsafe condition has not been eliminated, the request should include specific proposed actions to address it.

*Compliance:* Required as indicated, unless accomplished previously.

To prevent ceiling panels from falling into the passenger area in the event of failure of certain latch assemblies on the ceiling panels, which could result in consequent injury to the crew and passengers, accomplish the following:

(a) Within 24 months after the effective date of this AD, install strap assemblies on the ceiling panels and rails that support the video monitors, in accordance with Boeing Alert Service Bulletin 747–25A3142, dated October 16, 1997, or Revision 1, dated August 6, 1998.

**Alternative Methods of Compliance**

(b) An alternative method of compliance or adjustment of the compliance time that provides an acceptable level of safety may be used if approved by the Manager, Seattle Aircraft Certification Office, FAA, Transport Airplane Directorate. Operators shall submit their requests through an appropriate FAA Principal Maintenance Inspector, who may add comments and then send it to the Manager, Seattle ACO.

**Note 2:** Information concerning the existence of approved alternative methods of compliance with this AD, if any, may be obtained from the Seattle ACO.

**Special Flight Permits**

(c) Special flight permits may be issued in accordance with sections 21.197 and 21.199 of the Federal Aviation Regulations (14 CFR 21.197 and 21.199) to operate the airplane to a location where the requirements of this AD can be accomplished.

**Incorporation by Reference**

(d) The installation shall be done in accordance with Boeing Alert Service Bulletin 747–25A3142, dated October 16, 1997, or Boeing Service Bulletin 747–25A3142, Revision 1, dated August 6, 1998. This incorporation by reference was approved by the Director of the Federal Register in accordance with 5 U.S.C. 552(a) and 1 CFR part 51. Copies may be obtained from Boeing Commercial Airplane Group, P.O. Box 3707, Seattle, Washington 98124–2207. Copies may be inspected at the FAA, Transport Airplane Directorate, 1601 Lind Avenue, SW., Renton, Washington; or at the Office of the Federal Register, 800 North Capitol Street, NW., suite 700, Washington, DC.

(e) This amendment becomes effective on October 5, 1999.

Issued in Renton, Washington, on August 23, 1999.

**Vi L. Lipski,**

*Acting Manager, Transport Airplane Directorate, Aircraft Certification Service.*

[FR Doc. 99–22388 Filed 8–30–99; 8:45 am]

BILLING CODE 4910–13–U

---

## DEPARTMENT OF TRANSPORTATION

## Federal Aviation Administration

## 14 CFR Part 39

**[Docket No. 97–CE–10–AD; Amendment 39–11279; AD 99–18–13]**

**RIN 2120–AA64**

## Airworthiness Directives; de Havilland Inc. Models DHC-6–1, DHC–6–100, DHC–6–200, and DHC–6–300 Airplanes

**AGENCY:** Federal Aviation Administration, DOT.

**ACTION:** Final rule.

**SUMMARY:** This amendment adopts a new airworthiness directive (AD) that applies to all de Havilland Inc. Models DHC–6–1, DHC–6–100, DHC–6–200, and DHC–6–300 airplanes. This AD requires amending the Limitations Section of the airplane flight manual (AFM) to prohibit the positioning of the power levers aft of the flight idle stop while the airplane is in flight. The AFM amendment includes a statement of consequences if the limitation is not followed. This AD is a result of numerous incidents and five documented accidents involving airplanes equipped with turboprop engines where the propeller beta was improperly utilized during flight. None of the incidents or accidents involved de Havilland Inc. Models DHC–6–1, DHC–6–100, DHC–6–200, and DHC–6–300 airplanes. The actions specified by this AD are intended to prevent loss of airplane control or engine overspeed with consequent loss of engine power caused by the power levers being positioned aft of the flight idle stop while the airplane is in flight.

**EFFECTIVE DATE:** October 8, 1999.

**ADDRESSES:** This information may be examined at the Federal Aviation Administration (FAA), Central Region, Office of the Regional Counsel, Attention: Rules Docket No. 97–CE–10–AD, Room 1558, 601 E. 12th Street, Kansas City, Missouri 64106.

**FOR FURTHER INFORMATION CONTACT:** Peter LeVoci, Flight Test Pilot, FAA, New York Aircraft Certification Office, 10 Fifth Street, Third Floor, Valley Stream, New York 11581; telephone: (516) 256–7514; facsimile: (516) 568–2716.

**SUPPLEMENTARY INFORMATION:**

### Events Leading to the Issuance of This AD

A proposal to amend part 39 of the Federal Aviation Regulations (14 CFR part 39) to include an AD that would apply to all de Havilland Models DHC–6–1, DHC–6–100, DHC–6–200, and DHC–6–300 airplanes was published in the **Federal Register** as a notice of proposed rulemaking (NPRM) on October 22, 1998 (63 FR 56582). The NPRM proposed to require amending the Limitations Section of the AFM to prohibit the positioning of the power levers aft of the flight idle stop while the airplane is in flight, including a statement of consequences if the limitation is not followed. This AFM amendment shall consist of the following language:

> Positioning of power levers aft of the flight idle stop while the airplane is in flight is prohibited. Such positioning may lead to loss of airplane control or may result in an overspeed condition and consequent loss of engine power.

The NPRM was the result of numerous incidents and five documented accidents involving airplanes equipped with turboprop engines where the propeller beta was improperly utilized during flight. None of the incidents or accidents involved de Havilland Inc. Models DHC–6–1, DHC–6–100, DHC–6–200, and DHC–6–300 airplanes.

Interested persons have been afforded an opportunity to participate in the making of this amendment. Due consideration has been given to the one comment received.

### Comment Disposition

The commenter supports the AD as written and believes that the FAA

should issue additional AD action that mandates a modification that would prevent the flight crews from intentionally or inadvertently selecting the power levers below the flight idle stop while in flight. The commenter suggests this modification be in the form of a mechanical lockout device to preclude such power lever selection.

The FAA is currently evaluating each of the aircraft where AD's were issued to address this issue with a flight manual revision. The purpose of this evaluation is to determine whether a mechanical lockout device is necessary. Among those aircraft the FAA is evaluating are the de Havilland DHC–6 series airplanes. If the FAA determines that such a device is necessary, additional rulemaking may be initiated. No changes have been made to the final rule as a result of this comment.

## The FAA's Determination

After careful review of all available information related to the subject presented above, the FAA has determined that air safety and the public interest require the adoption of the rule as proposed except for minor editorial corrections. The FAA has determined that these minor corrections will not change the meaning of the AD and will not add any additional burden upon the public than was already proposed.

## Compliance Time of This AD

The FAA has determined that the compliance time of this AD will be specified in calendar time instead of hours time-in-service. While the condition addressed by this AD is unsafe while the airplane is in flight, the condition is not a result of repetitive airplane operation; the potential of the unsafe condition occurring is the same on the first flight as it is for subsequent flights. The compliance time of ''30 days after the effective date of this AD'' will not inadvertently ground airplanes and will assure that all owners/operators of the affected airplanes accomplish this action in a reasonable time period.

## Cost Impact

The FAA estimates that 114 airplanes in the U.S. registry will be affected by this AD, that it will take approximately 1 workhour per airplane to incorporate the AFM amendment, and that the average labor rate is approximately $60 an hour. Accomplishing the AFM revision requirements of this AD may be performed by the owner/operator holding at least a private pilot certificate as authorized by section 43.7 of the Federal Aviation Regulations (14 CFR 43.7), and must be entered into the aircraft records showing compliance with the AD in accordance with section 43.9 of the Federal Aviation Regulations (14 CFR 43.9). The only cost impact of this AD is the time it would take each owner/operator of the affected airplanes to insert the information into the AFM.

## Regulatory Impact

The regulations adopted herein will not have substantial direct effects on the States, on the relationship between the national government and the States, or on the distribution of power and responsibilities among the various levels of government. Therefore, in accordance with Executive Order 12612, it is determined that this final rule does not have sufficient federalism implications to warrant the preparation of a Federalism Assessment.

For the reasons discussed above, I certify that this action (1) is not a ''significant regulatory action'' under Executive Order 12866; (2) is not a ''significant rule'' under DOT Regulatory Policies and Procedures (44 FR 11034, February 26, 1979); and (3) will not have a significant economic impact, positive or negative, on a substantial number of small entities under the criteria of the Regulatory Flexibility Act. A copy of the final evaluation prepared for this action is contained in the Rules Docket. A copy of it may be obtained by contacting the Rules Docket at the location provided under the caption **ADDRESSES**.

## List of Subjects in 14 CFR Part 39

Air transportation, Aircraft, Aviation safety, Safety.

## Adoption of the Amendment

Accordingly, pursuant to the authority delegated to me by the Administrator, the Federal Aviation Administration amends part 39 of the Federal Aviation Regulations (14 CFR part 39) as follows:

## PART 39—AIRWORTHINESS DIRECTIVES

1. The authority citation for part 39 continues to read as follows:

**Authority:** 49 U.S.C. 106(g), 40113, 44701.

### § 39.13 [Amended]

2. Section 39.13 is amended by adding a new airworthiness directive (AD) to read as follows:

**99–18–13 De Havilland Inc:** Amendment 39–11279; Docket No. 97-CE–10-AD.

*Applicability:* Models DHC–6–1, DHC–6–100, DHC–6–200, and DHC–6–300 airplanes, all serial numbers, certificated in any category.

**Note 1:** This AD applies to each airplane identified in the preceding applicability provision, regardless of whether it has been modified, altered, or repaired in the area subject to the requirements of this AD. For airplanes that have been modified, altered, or repaired so that the performance of the requirements of this AD is affected, the owner/operator must request approval for an alternative method of compliance in accordance with paragraph (e) of this AD. The request should include an assessment of the effect of the modification, alteration, or repair on the unsafe condition addressed by this AD; and, if the unsafe condition has not been eliminated, the request should include specific proposed actions to address it.

*Compliance:* Required within the next 30 days after the effective date of this AD, unless already accomplished.

To prevent loss of airplane control or engine overspeed with consequent loss of engine power caused by the power levers being positioned aft of the flight idle stop while the airplane is in flight, accomplish the following:

(a) Amend the Limitations Section of the airplane flight manual (AFM) by inserting the following language:

Positioning of power levers aft of the flight idle stop while the airplane is in flight is prohibited. Such positioning may lead to loss of airplane control or may result in an overspeed condition and consequent loss of engine power.

(b) This action may be accomplished by incorporating a copy of this AD into the Limitations Section of the AFM.

(c) Amending the AFM, as required by this AD, may be performed by the owner/operator holding at least a private pilot certificate as authorized by section 43.7 of the Federal Aviation Regulations (14 CFR 43.7), and must be entered into the aircraft records showing compliance with this AD in accordance with section 43.9 of the Federal Aviation Regulations (14 CFR 43.9).

(d) Special flight permits may be issued in accordance with sections 21.197 and 21.199 of the Federal Aviation Regulations (14 CFR 21.197 and 21.199) to operate the airplane to a location where the requirements of this AD can be accomplished.

(e) An alternative method of compliance or adjustment of the compliance time that provides an equivalent level of safety may be approved by the Manager, FAA, New York Aircraft Certification Office (ACO), 10 Fifth Street, Third Floor, Valley Stream, New York 11581. The request shall be forwarded through an appropriate FAA Maintenance Inspector, who may add comments and then send it to the Manager, New York ACO.

**Note 2:** Information concerning the existence of approved alternative methods of compliance with this AD, if any, may be obtained from the New York ACO.

(f) This amendment becomes effective on October 8, 1999.

Issued in Kansas City, Missouri, on August 23, 1999.

**Terry L. Chasteen,**

*Acting Manager, Small Airplane Directorate, Aircraft Certification Service.*

[FR Doc. 99–22535 Filed 8–30–99; 8:45 am]

BILLING CODE 4910–13–U

---

## DEPARTMENT OF TRANSPORTATION

## Federal Aviation Administration

## 14 CFR Part 39

**[Docket No. 99–CE–56–AD; Amendment 39–11281; AD 99–18–15]**

**RIN 2120–AA64**

## Airworthiness Directives; Raytheon Aircraft Company Beech Models C90A, B200, B300, and 1900D Airplanes

**AGENCY:** Federal Aviation Administration, DOT.

**ACTION:** Final rule; request for comments.

**SUMMARY:** This amendment adopts a new airworthiness directive (AD) that applies to all Raytheon Aircraft Company (Raytheon) Beech Models C90A, B200, B300, and 1900D airplanes. This AD requires replacing the landing gear hand pump for airplanes that had a pump within a certain serial number range installed at manufacture; and prohibits the future installation of any of these pumps on all of the affected airplanes. This AD is the result of information from the manufacturer of improper machining of the pump housing on certain landing gear emergency hand pumps on the affected airplanes. This resulted in an insufficient groove depth to retain a snap ring, which retains the check valve in its proper position within the housing. The actions specified in this AD are intended to detect any improperly machined landing gear emergency hand pumps, which, if not removed from service, could result in the inability to properly lower and lock the landing gear in the event of failure of the primary retraction/extension system.

**DATES:** Effective September 27, 1999.

Comments for inclusion in the Rules Docket must be received on or before October 27, 1999.

**ADDRESSES:** Submit comments in triplicate to the Federal Aviation Administration (FAA), Central Region, Office of the Regional Counsel, Attention: Rules Docket No. 99–CE–56–AD, Room 1558, 601 E. 12th Street, Kansas City, Missouri 64106.

This information may be examined at the Federal Aviation Administration (FAA), Central Region, Office of the Regional Counsel, Attention: Rules Docket No. 99–CE–56–AD, Room 1558, 601 E. 12th Street, Kansas City, Missouri 64106.

**FOR FURTHER INFORMATION CONTACT:** Mr. Paul DeVore, Aerospace Engineer, FAA, Wichita Aircraft Certification Office, 1801 Airport Road, Mid-Continent Airport, Wichita, Kansas 67209; telephone: (316) 946–4142; facsimile: (316) 946–4407.

**SUPPLEMENTARY INFORMATION:**

### Discussion

The FAA has received information from the Raytheon Aircraft Corporation (Raytheon) of improper machining of the pump housing on landing gear emergency hand pumps, part number 101–388007–3, serial numbers 2702 through 2833; that are installed on certain Raytheon Beech Models C90A, B200, B300, and 1900D airplanes. This resulted in an insufficient groove depth to retain a snap ring, which retains the check valve in its proper position within the housing. These landing gear emergency hand pumps may have been installed at manufacture on airplanes within the following serial number range:

| Model | Serial numbers |
|---|---|
| C90A ..... | LJ–1526 through LJ–1550. |
| B200 ..... | BB–1628 through BB–1659. |
| B300 ..... | FL–213 through FL–237. |
| 1900D .... | UE–346 through UE–356, UE–358, and UE–367. |

Continuing to utilize these pumps in service could result in the inability to properly lower and lock the landing gear in the event of failure of the primary retraction/extension system.

### The FAA's Determination

After examining the circumstances and reviewing all available information related to the incidents described above, the FAA has determined that:

—These improperly machined landing gear emergency hand pumps should be removed from service; and

—AD action should be taken to prevent the above-referenced condition from occurring.

### Explanation of the Provisions of the AD

Since an unsafe condition has been identified that is likely to exist or develop in other Raytheon Beech Models C90A, B200, B300, and 1900D airplanes of the same type design, the FAA is taking AD action. This AD requires replacing the landing gear hand pump for airplanes that had a pump within a certain serial number range installed at manufacture; and prohibits the future installation of any of these pumps on all of the affected airplanes.

### Determination of the Effective Date of the AD

Since a situation exists that requires the immediate adoption of this regulation, it is found that notice and opportunity for public prior comment hereon are impracticable, and that good cause exists for making this amendment effective in less than 30 days.

### Comments Invited

Although this action is in the form of a final rule that involves requirements affecting immediate flight safety and, thus, was not preceded by notice and opportunity to comment, comments are invited on this rule. Interested persons are invited to comment on this rule by submitting such written data, views, or arguments as they may desire. Communications should identify the Rules Docket number and be submitted in triplicate to the address specified above. All communications received on or before the closing date for comments will be considered, and this rule may be amended in light of the comments received. Factual information that supports the commenter's ideas and suggestions is extremely helpful in evaluating the effectiveness of the AD action and determining whether additional rulemaking action would be needed.

Comments are specifically invited on the overall regulatory, economic, environmental, and energy aspects of the rule that might suggest a need to modify the rule. All comments submitted will be available, both before and after the closing date for comments, in the Rules Docket for examination by interested persons. A report that summarizes each FAA-public contact concerned with the substance of this AD will be filed in the Rules Docket.

Commenters wishing the FAA to acknowledge receipt of their comments submitted in response to this rule must submit a self-addressed, stamped postcard on which the following statement is made: ''Comments to Docket No. 99–CE–56–AD.'' The postcard will be date stamped and returned to the commenter.

### Regulatory Impact

The regulations adopted herein will not have substantial direct effects on the States, on the relationship between the national government and the States, or on the distribution of power and responsibilities among the various levels of government. Therefore, in accordance with Executive Order 12612,

it is determined that this final rule does not have sufficient federalism implications to warrant the preparation of a Federalism Assessment.

The FAA has determined that this regulation is an emergency regulation that must be issued immediately to correct an unsafe condition in aircraft, and is not a significant regulatory action under Executive Order 12866. It has been determined further that this action involves an emergency regulation under DOT Regulatory Policies and Procedures (44 FR 11034, February 26, 1979). If it is determined that this emergency regulation otherwise would be significant under DOT Regulatory Policies and Procedures, a final regulatory evaluation will be prepared and placed in the Rules Docket (otherwise, an evaluation is not required). A copy of it, if filed, may be obtained from the Rules Docket.

### List of Subjects in 14 CFR Part 39

Air transportation, Aircraft, Aviation safety, Safety.

### Adoption of the Amendment

Accordingly, pursuant to the authority delegated to me by the Administrator, the Federal Aviation Administration amends part 39 of the Federal Aviation Regulations (14 CFR part 39) as follows:

## PART 39—AIRWORTHINESS DIRECTIVES

1. The authority citation for part 39 continues to read as follows:

**Authority:** 49 U.S.C. 106(g), 40113, 44701.

### § 39.13 [Amended]

2. Section 39.13 is amended by adding a new airworthiness directive (AD) to read as follows:

**99–18–15 Raytheon Aircraft Company** (All type certificates of the affected airplanes previously held by the Beech Aircraft Corporation): Amendment 39–11281; Docket No. 99–CE–56–AD.

*Applicability:* The following Raytheon Beech airplane models and serial numbers, certificated in any category:

REPLACEMENT REQUIREMENTS OF PARAGRAPH (A) OF THIS AD

| Model | Serial numbers |
|---|---|
| C90A ..... | LJ–1526 through LJ–1550. |
| B200 ..... | BB–1628 through BB–1659. |
| B300 ..... | FL–213 through FL–237. |
| 1900D .... | UE–346 through UE–356, UE–358, and UE–367. |

INSTALLATION REQUIREMENTS OF PARAGRAPH (B) OF THIS AD

| Model | Serial numbers |
|---|---|
| C90A ..... | All serial numbers. |
| B200 ..... | All serial numbers. |
| B300 ..... | All serial numbers. |
| 1900D .... | All serial numbers. |

**Note 1:** This AD applies to each airplane identified in the preceding applicability provision, regardless of whether it has been modified, altered, or repaired in the area subject to the requirements of this AD. For airplanes that have been modified, altered, or repaired so that the performance of the requirements of this AD is affected, the owner/operator must request approval for an alternative method of compliance in accordance with paragraph (e) of this AD. The request should include an assessment of the effect of the modification, alteration, or repair on the unsafe condition addressed by this AD; and, if the unsafe condition has not been eliminated, the request should include specific proposed actions to address it.

*Compliance:* Required as indicated in the body of this AD, unless already accomplished.

To detect any improperly machined landing gear emergency hand pumps, which, if not removed from service, could result in the inability to properly lower and lock the landing gear in the event of failure of the primary retraction/extension system, accomplish the following:

(a) *For the airplanes referenced in the Replacement Requirements of Paragraph (a) of this AD portion of the Applicability section of this AD:* Within the next 25 hours time-in-service (TIS) after the effective date of this AD, replace any landing gear emergency hand pump, part number 101–388007–3, that incorporates a serial number in the range of 2702 through 2833.

**Note 2:** This AD allows the aircraft owner or pilot to check the maintenance records to determine whether the landing gear emergency hand pump, part number 101–388007–3, has been replaced with one outside the serial number range of 2702 through 2833. See paragraph (c) of this AD for authorization.

(b) *For the airplanes referenced in the Installation Requirements of Paragraph (b) of this AD portion of the Applicability section of this AD:* As of the effective date of this AD, no person may install a landing gear emergency hand pump, part number 101–388007–3, that incorporates a serial number in the range of 2702 through 2833.

(c) The owner/operator holding at least a private pilot certificate as authorized by section 43.7 of the Federal Aviation Regulations (14 CFR 43.7) may check the maintenance records to determine whether the landing gear emergency hand pump, part number 101–388007–3, that is installed incorporates a serial number outside the range of 2702 through 2833. If, by checking the maintenance records, it can be positively shown that an actuator with a serial number outside of the range of 2702 through 2833 is installed, the requirements of paragraph (a) of this AD do not apply and the owner/operator must make an entry into the aircraft records showing compliance with this portion of the AD in accordance with section 43.9 of the Federal Aviation Regulations (14 CFR 43.9).

(d) Special flight permits may be issued in accordance with sections 21.197 and 21.199 of the Federal Aviation Regulations (14 CFR 21.197 and 21.199) to operate the airplane to a location where the requirements of this AD can be accomplished.

(e) An alternative method of compliance or adjustment of the compliance times that provides an equivalent level of safety may be approved by the Manager, Wichita Aircraft Certification Office (ACO), 1801 Airport Road, Room 100, Mid-Continent Airport, Wichita, Kansas 67209. The request shall be forwarded through an appropriate FAA Maintenance Inspector, who may add comments and then send it to the Manager, Wichita ACO.

**Note 3:** Information concerning the existence of approved alternative methods of compliance with this AD, if any, may be obtained from the Wichita ACO.

(f) This amendment becomes effective on September 27, 1999.

Issued in Kansas City, Missouri, on August 23, 1999.

**Terry L. Chasteen,**

*Acting Manager, Small Airplane Directorate, Aircraft Certification Service.*

[FR Doc. 99–22534 Filed 8–30–99; 8:45 am]

BILLING CODE 4910–13–U

---

## DEPARTMENT OF TRANSPORTATION

## Federal Aviation Administration

## 14 CFR Part 39

**[Docket No. 97–NM–03–AD; Amendment 39–11271; AD 99–18–05]**

**RIN 2120–AA64**

## Airworthiness Directives; Boeing Model 727 Series Airplanes

**AGENCY:** Federal Aviation Administration, DOT.

**ACTION:** Final rule.

**SUMMARY:** This amendment adopts a new airworthiness directive (AD), applicable to all Boeing Model 727 series airplanes, that requires repetitive inspections to detect cracks in the forward flange of the vertical beam of the aft pressure bulkhead at certain buttock lines, and installation of a splice repair, if necessary. The amendment also requires installation of a preventative modification on the vertical beam of the door frame in certain cases. This amendment is prompted by reports of fatigue cracks found in the vertical beam web and forward flange of the aft pressure bulkhead. The actions specified by this AD are intended to detect and correct

such fatigue cracking, which could result in the inability of the subject vertical beam to withstand the fail-safe loads, and consequent loss of cabin pressurization.

**DATES:** Effective October 5, 1999.

The incorporation by reference of certain publications listed in the regulations is approved by the Director of the Federal Register as of October 5, 1999.

**ADDRESSES:** The service information referenced in this AD may be obtained from Boeing Commercial Airplane Group, P.O. Box 3707, Seattle, Washington 98124–2207. This information may be examined at the Federal Aviation Administration (FAA), Transport Airplane Directorate, Rules Docket, 1601 Lind Avenue, SW., Renton, Washington; or at the Office of the Federal Register, 800 North Capitol Street, NW., suite 700, Washington, DC.

**FOR FURTHER INFORMATION CONTACT:** Walter Sippel, Aerospace Engineer, Airframe Branch, ANM–120S, FAA, Seattle Aircraft Certification Office, 1601 Lind Avenue, SW., Renton, Washington; telephone (425) 227–2774; fax (425) 227–1181.

**SUPPLEMENTARY INFORMATION:** A proposal to amend part 39 of the Federal Aviation Regulations (14 CFR part 39) to include an airworthiness directive (AD) that is applicable to all Boeing Model 727 series airplanes was published in the **Federal Register** on July 18, 1997 (62 FR 38493). That action proposed to require repetitive inspections to detect cracks in the forward flange of the vertical beam of the aft pressure bulkhead at certain buttock lines, and installation of a splice repair, if necessary. That action also proposed to require installation of a preventative modification on the vertical beam of the door frames in certain cases.

## Comments Received

Interested persons have been afforded an opportunity to participate in the making of this amendment. Due consideration has been given to the comments received.

Two commenters support the proposed rule.

## Request to Correct Service Information

One commenter states that the last sentence under the heading ''Explanation of Relevant Service Information'' of the proposed AD incorrectly references Boeing Service Bulletin 727–53–0055 as ''an additional source of service information for identical procedures to repair and modify the affected area.'' The commenter adds that Boeing Service Bulletin 727–53–0055 specifies a splice installation only if cracks are beyond repair/modification limits, whereas Boeing Service Bulletin 727–53–0210, dated April 1, 1993, specifies a splice repair and modification any time cracks are found.

The FAA does not concur that the reference to Boeing Service Bulletin 727–53–0055 is incorrect in the proposed AD. Although Boeing Service Bulletins 727–53–0055 and 727–53–0210 specify an inspection of the vertical beam at different locations, both service bulletins specify the same procedures for accomplishing the preventative modification and the splice repair. In light of this, the FAA considers that the reference to Boeing Service Bulletin 727–53–0055 is correct. However, the ''Explanation of Relevant Service Information'' does not reappear in the final rule; therefore, no change to the final rule is necessary in this regard.

## Requests to Revise the Cost Estimate

Three commenters request that the cost estimate in the proposed AD be revised.

One commenter estimates that access to the affected area and removal and installation of the lavatories and walls would require 80 hours for a fleet cost of $389,000 for the inspection, total out-of-service costs of $1,285,380, additional inspection costs of $728,382 because of a disruption of normal ''C'' checks, and an inspection-only cost of $2,402,762. The commenter adds that the proposed AD requires inspections within 1,500 flight cycles, which would not allow the airplane to be scheduled into normal ''C'' checks and would necessitate its removal from service for approximately 90 days.

Another commenter estimates approximately 10 hours for the inspections. This estimate is based on 4 hours to gain access to the inspection area, 2 hours to accomplish the inspection, and 4 hours to close up the inspection area, with a cost per airplane of approximately $600 and a fleet cost of $632,400.

Another commenter estimates 200 hours (two mechanics for 5 working days) to remove/replace the lavatories and perform the inspections. The commenter states that, because the proposed initial inspection interval of 1,500 flight cycles is 500 flight cycles less than its current ''C'' check interval, 25 percent of its Model 727 fleet would need to be removed from service on a ''special route'' basis and flown to a maintenance base to accomplish the inspection. The commenter adds that this schedule disruption and the downtime added to routine ''C'' check visits would severely impact operations and result in unnecessary expense and burden.

The FAA does not concur with the commenters' requests to revise the cost estimate in the AD. The FAA based its estimate on the cost estimate recommended in Boeing Service Bulletin 727–53–0210, dated April 1, 1993; as revised by Notice of Status Change 727–53–0210 NSC 1, dated June 17, 1993; and Notice of Status Change 727–53–0210 NSC 2, dated September 21, 1995. In that service bulletin, the time for removal and installation of lavatories is not included in the estimate because those times vary significantly based on the type of lavatories installed and whether lavatory galleys are installed (freighters have neither), and whether or not other inspections are being accomplished.

The FAA recognizes that, in accomplishing the requirements of any AD, operators may incur ''incidental'' costs in addition to the ''direct'' costs. The cost analysis in AD rulemaking actions, however, typically does not include incidental costs, such as the time required to gain access and close up; planning time; or time necessitated by other administrative actions. Because incidental costs may vary significantly from operator to operator, they are almost impossible to calculate.

In addition, where safety considerations allow, the FAA attempts to impose compliance times that generally coincide with operators' maintenance schedules. However, because operators' schedules vary substantially, the FAA is unable to accommodate every operator's optimal scheduling in each AD. Each AD does allow individual operators to obtain approval for extensions of compliance times, based on a showing that the extension will not affect safety adversely. Therefore, the FAA does not consider it appropriate to attribute to the AD, the costs associated with the type of special scheduling that might otherwise be required. Furthermore, because the FAA generally attempts to impose compliance times that coincide with operators' scheduled maintenance, the FAA considers it inappropriate to attribute the cost associated with aircraft ''downtime'' to the cost of the AD, because, normally, compliance with the AD will not necessitate any additional downtime beyond that of a regularly scheduled maintenance hold. Even if, in some cases, additional downtime is necessary for some airplanes, the FAA does not possess sufficient information to evaluate the number of airplanes that may be so affected or the amount of additional downtime that may be

required. No change to the final rule is necessary in this regard.

**Request to Revise Compliance Time**

One commenter requests revising **Note 2** [following paragraph (a)(2) of the proposed AD]. The commenter states that **Note 2** does not agree with the service bulletin. The commenter considers that if the splice repair has been accomplished, the inspection threshold should be 20,000 flight cycles since installation of the splice repair; whereas, if the splice repair has not been accomplished, the threshold should be 20,000 flight cycles from time of delivery.

The FAA agrees with the commenter's remark that **Note 2** of the proposed AD does not correspond with the service bulletin, and has removed the note from this final rule. In reviewing this comment, the FAA notes that the compliance time specified in the proposed AD differs from the service bulletin. However, the FAA's intent was that the compliance times coincide with the service bulletin.

Further, the FAA notes that the splice repair or the preventative modification may have been installed independently on the left and right vertical beams. In such cases, in order to allow those beams to be inspected independently, the FAA has revised the final rule to specify compliance times from the time of installation of the splice repair or preventative modification of the vertical beams. The compliance times in paragraphs (a)(1) and (a)(2) of this AD have been revised to coincide with the service bulletin, as follows:

- For any vertical beam on which neither the preventative modification nor the splice repair have been accomplished, paragraph (a)(1) of this AD requires an inspection prior to the accumulation of 20,000 total flight cycles, or within 1,500 flight cycles after the effective date of this AD, whichever occurs later.
- For any vertical beam on which the preventative modification has not been accomplished and the splice repair has been accomplished, paragraph (a)(2) of this AD requires an inspection prior to the accumulation of 20,000 flight cycles since installation of the splice repair, or within 1,500 flight cycles after the effective date of this AD, whichever occurs later.

**Request to Extend Compliance Time for Inspections**

One commenter requests an inspection interval of 4,000 flight cycles, with repeat inspections every 4,000 flight cycles if the preventative modification has not been accomplished. The commenter states that the 4,000 flight cycle limit would allow the operator to remove the lavatories, accomplish the inspection, and install the preventative modification during scheduled corrosion (R–check) visits. The commenter adds that these corrosion visits are of sufficient duration to absorb the additional work without undue impact, and that its current fleet plans include the initial inspection and installation of the preventative modification during the same visit. The commenter considers that the 4,000 flight cycles for the initial inspection is justified from a technical standpoint because it has been conducting routine intensified inspections and repairs of the aft pressure bulkhead vertical beam at scheduled heavy maintenance visits since 1988. The commenter also states that the inspection interval of 1,500 flight cycles is 500 flight cycles less than its current ''C–check'' interval. The commenter adds that, unless the inspection intervals are increased, 25% of its 727 fleet would be removed from service on a ''special route'' basis and flown to base maintenance. The commenter considers that this schedule disruption and the additional downtime added to routine C–checks would severely impact operations and result in unnecessary expense and burden, whereas inspection intervals of 4,000 flight cycles would allow sufficient time to accomplish the work without undue impact.

The FAA does not concur with the commenter's request to revise the compliance times, as described. The grace period for the initial inspection and the inspection intervals specified in this AD were determined based on engineering analysis of crack growth rates and the type of detection methods used. The compliance times proposed by the commenter do not ensure that cracking will be detected in a timely manner.

Another commenter requests that the initial inspection threshold required by paragraph (a)(1) of the proposed AD be increased from ''18,500 total flight cycles'' to ''30,000 total flight cycles.'' The commenter states that the two reports of cracks have both occurred at 48,000 and 48,500 flight cycles. The commenter adds that it considers the inspection threshold of 18,500 flight cycles to be premature because cracking did not occur before 48,000 flight cycles.

The FAA does not concur that the inspection threshold required by paragraph (a)(1) of the final rule, should be increased to 30,000 total flight cycles. While Boeing Service Bulletin 727–53–0210 specifies that cracks occurred at thresholds exceeding 48,000 flight cycles, the FAA considers that the extent of such cracking was unsafe. In developing an appropriate compliance time for this AD, the FAA considered the degree of urgency associated with addressing the subject unsafe condition, the average utilization of the affected fleet, the time necessary to perform the inspection, and the practical aspects of performing the inspections. In consideration of these factors, the FAA finds that the compliance time required by paragraph (a)(1) of this AD represents an appropriate threshold for accomplishment of the inspection in a timely manner within the fleet and still maintain an adequate level of safety. The FAA considers that the inspections can be accomplished within an interval of time that parallels normal scheduled maintenance for a majority of affected operators, and within an appropriate interval to prevent the initiation and propagation of fatigue cracking in the vertical beam web and forward flange of the aft pressure bulkhead.

Because the objective of the proposed inspections is to detect and correct these cracks before the extent of the cracking found on those airplanes, the FAA has determined that the inspection threshold specified in paragraph (a)(1) of the AD is appropriate. No change was made to the final rule in this regard.

**Request to Defer Accomplishment of Modification on Both Frames**

One commenter states that operators should have the option of ''terminating the inspection'' on both frames. The FAA infers that the commenter requests that the repair be required for cracked door frames only, and that operators be allowed to accomplish the modification at a time established by the operator. The FAA has determined that an appropriate level of safety can be assured by accomplishment of both the repair and modification on all cracked door frames prior to further flight, as recommended by the manufacturer. Additionally, repetitive inspections of uncracked door frames must be accomplished at the intervals specified in this AD. Paragraphs (b) and (c) of this AD have been revised accordingly.

**Request to Change Installation Requirement for Splice Repair**

One commenter requests that an operator should be allowed to install the splice repair only (not the preventative modification) on a cracked door frame, followed by repeat inspections beginning at 18,500 flight cycles.

The FAA does not concur that an adequate level of safety can be ensured

by requiring only the splice repair and continued inspection beginning at 18,500 flight cycles after repair of the cracked vertical beam. The FAA points out that the commenter provided no technical justification for accomplishing only the repair with repetitive inspections of a cracked vertical beam; the FAA considers cracking in the forward flange of the vertical beam of the aft pressure bulkhead to be a significant safety issue.

In developing the appropriate actions (i.e., repair, modification, and repetitive inspections) for this AD, the FAA considered not only those safety issues but the recommendations of the manufacturer, the availability of parts, and the practical aspect of accomplishing the required inspections within an interval of time that parallels normal scheduled maintenance for the majority of affected operators. The FAA considers that the repair, modification, and repetitive inspections required by the proposed AD are necessary to ensure the timely detection of cracking.

To further clarify the required repetitive inspection intervals of uncracked vertical beams and the required actions for cracked vertical beams, paragraphs (b)(1)(i) and (b)(1)(ii) have been added, and paragraphs (b), (b)(1), (b)(2), and (c) have been revised in the final rule.

**Requests to Clarify the Repetitive Inspection Intervals**

One commenter requests that paragraph (a)(2) of the proposed AD, which specifies repetitive inspections at intervals not to exceed 6,000 flight cycles, be divided into two sections, one for airplanes inspected at 3,000 flight cycles and another for airplanes inspected at 6,000 flight cycles. The commenter states that, for airplanes with the modification accomplished previously, paragraph (a)(2) requires repetitive inspections thereafter at intervals not to exceed 6,000 flight cycles; however, paragraph (b)(2) requires such inspections at intervals not to exceed 3,000 flight cycles. The commenter considers that the FAA's intent was to require such inspections thereafter at intervals not to exceed 3,000 flight cycles for airplanes that do not have preventative modifications installed.

Another commenter states that the actions required by paragraphs (a)(2) and (b)(2) seem to conflict. That commenter suggests changing the wording in those paragraphs to clarify that repetitive inspections are not to exceed 3,000 flight cycles for unmodified structure or 6,000 flight cycles for modified structure.

The FAA concurs. The FAA agrees that clarification of the number of repetitive inspection intervals specified in paragraphs (a)(2) and (b)(2) of the proposed AD is necessary. The FAA also agrees that it is necessary to distinguish between the number of flight cycles required for modified and unmodified structures in the final rule. In light of this, the FAA has deleted the repetitive inspections specified in paragraph (a)(2) of the proposed AD, and has specified the repetitive inspection intervals required for modified and unmodified structures in paragraphs (b)(1)(i) and (b)(1)(ii) of the final rule.

**Request to Allow Repair/Modification During D-Check**

One commenter requests that the repair and modification required by the proposed AD be accomplished during ''D-check'' opportunities because the actions required could exceed 200 hours and possibly 4 days.

The FAA does not concur. The FAA points out that the compliance times specified in the AD for the repair and preventative modification were based on the information included in Boeing Service Bulletin 727–53–0210, and that it considers these estimates appropriate. The FAA has determined that continued flight with unmodified structure, which has begun to crack and is likely to continue cracking, does not provide an acceptable level of safety. In light of these considerations, no change has been made to the final rule in this regard.

**Request to Correct Typographical Error**

Two commenters request a correction to paragraph (c) of the NPRM to delete a reference to paragraph (a)(3). The FAA agrees that paragraph (a)(3) did not exist in the NPRM and that a reference to that paragraph should not have been included in paragraph (c) of the NPRM. However, the final rule now includes a paragraph (a)(3), which is appropriately referenced in paragraph (c) of this final rule.

**Request to Permit ''Industry-Accepted Shop Practices''**

One commenter requests including a statement in the final rule allowing the use of industry-accepted shop practices in lieu of processes and finishes (e.g., primer, paint, or sealant) that are specified by the original equipment manufacturer (OEM) and that have no effect on the intent of the AD. The commenter states that industry-accepted shop practices would allow operators to use equivalent methods and types of finishes without first having to seek approval from the FAA for an alternative method of compliance.

The FAA does not concur with the request to allow the use of industry-accepted shop practices instead of the alternative method of compliance required by paragraph (d) of the proposed AD. The FAA points out that such practices could vary from operator to operator and, thus, make it impossible to ensure the appropriate level of safety required. In light of this, the FAA has determined that it is unacceptable to delegate an undefined practice. This final rule requires that the actions be accomplished in accordance with the procedures specified in Boeing Service Bulletin 727–53–0210. An industry-accepted shop practice may be used only if approved as an alternative method of compliance in accordance with paragraph (d) of the final rule. No change has been made to paragraph (d) of the final rule.

**Explanation of Changes Made to the Proposal**

Operators should note that the following changes were made to this AD to clarify certain terminology:

- The term ''aft fuselage bulkhead,'' which was used in the proposed AD, has been changed to ''aft pressure bulkhead'' in the final rule. This change was made in the Summary and throughout this AD to correlate with the term used in Boeing Service Bulletin 727–53–0210 and because it more accurately describes the bulkhead.
- The term ''close visual inspections,'' as specified in certain paragraphs of the proposed AD, has been changed to ''detailed visual inspections.'' This terminology is considered to be technically equivalent. This change was made in paragraphs (b)(1)(i), (b)(1)(ii), (b)(2), and (c) of the final rule. In addition, **Note 2** has been added to the final rule, following paragraph (a)(3), to include the definition of a ''detailed visual inspection.''

**Conclusion**

After careful review of the available data, including the comments noted above, the FAA has determined that air safety and the public interest require the adoption of the rule with the changes previously described. The FAA has determined that these changes will neither increase the economic burden on any operator nor increase the scope of the AD.

**Cost Impact**

There are approximately 1,560 Model 727 series airplanes of the affected design in the worldwide fleet. The FAA

estimates that 1,054 airplanes of U.S. registry will be affected by this AD.

It will take approximately 2 work hours per airplane to accomplish the required inspections, at an average labor rate of $60 per work hour. Based on these figures, the cost impact of the inspection required by this AD on U.S. operators is estimated to be $126,480, or $120 per airplane, per inspection cycle.

The cost impact figure discussed above is based on assumptions that no operator has yet accomplished any of the requirements of this AD action, and that no operator would accomplish those actions in the future if this AD were not adopted.

Should an operator be required to accomplish the preventative modification, it will take approximately 100 work hours per airplane to accomplish, at an average labor rate of $60 per work hour. The cost of required parts could range between $910 and $1,042 per preventative modification kit (2 kits per airplane). Based on these figures, the cost impact of the preventative modification required by this AD on U.S. operators is estimated to be between $7,820, and $8,084 per airplane.

Should an operator be required to accomplish the splice repair, it will take approximately 148 work hours per airplane to accomplish, at an average labor rate of $60 per work hour. Required parts will cost approximately $3,545 per airplane ($1,756 for the splice repair kit on the left side, and $1,789 for the splice repair kit on the right side). Based on these figures, the cost impact of the splice repair required by this AD on U.S. operators is estimated to be $12,425 per airplane.

## Regulatory Impact

The regulations adopted herein will not have substantial direct effects on the States, on the relationship between the national government and the States, or on the distribution of power and responsibilities among the various levels of government.

Therefore, in accordance with Executive Order 12612, it is determined that this final rule does not have sufficient federalism implications to warrant the preparation of a Federalism Assessment.

For the reasons discussed above, I certify that this action (1) is not a ''significant regulatory action'' under Executive Order 12866; (2) is not a ''significant rule'' under DOT Regulatory Policies and Procedures (44 FR 11034, February 26, 1979); and (3) will not have a significant economic impact, positive or negative, on a substantial number of small entities under the criteria of the Regulatory Flexibility Act. A final evaluation has been prepared for this action and it is contained in the Rules Docket. A copy of it may be obtained from the Rules Docket at the location provided under the caption **ADDRESSES**.

## List of Subjects in 14 CFR Part 39

Air transportation, Aircraft, Aviation safety, Incorporation by reference, Safety.

## Adoption of the Amendment

Accordingly, pursuant to the authority delegated to me by the Administrator, the Federal Aviation Administration amends part 39 of the Federal Aviation Regulations (14 CFR part 39) as follows:

## PART 39—AIRWORTHINESS DIRECTIVES

1. The authority citation for part 39 continues to read as follows:

**Authority:** 49 U.S.C. 106(g), 40113, 44701.

### § 39.13 [Amended]

2. Section 39.13 is amended by adding the following new airworthiness directive:

**99–18–05 Boeing:** Amendment 39–11271. Docket 97–NM–03–AD.

**Applicability:** All Model 727 airplanes, certificated in any category.

**Note 1:** This AD applies to each airplane identified in the preceding applicability provision, regardless of whether it has been modified, altered, or repaired in the area subject to the requirements of this AD. For airplanes that have been modified, altered, or repaired so that the performance of the requirements of this AD is affected, the owner/operator must request approval for an alternative method of compliance in accordance with paragraph (d) of this AD. The request should include an assessment of the effect of the modification, alteration, or repair on the unsafe condition addressed by this AD; and, if the unsafe condition has not been eliminated, the request should include specific proposed actions to address it.

*Compliance:* Required as indicated, unless accomplished previously.

To detect and correct fatigue cracking in the forward flange of the vertical beam of the aft pressure bulkhead, which could result in the inability of the subject vertical beam to withstand the fail-safe loads, and consequent loss of cabin pressurization, accomplish the following:

**Initial Inspections**

(a) Perform a detailed visual inspection and a high frequency eddy current (HFEC) inspection to detect cracks in the forward flange of the vertical beam at left and right buttock line 17.8 from water lines 265 through 288 inclusive, in accordance with Boeing Service Bulletin 727–53–0210, dated April 1, 1993, as revised by Notice of Status Change 727–53–0210 NSC 1, dated June 17, 1993, and Notice of Status Change 727–53–0210 NSC 2, dated September 21, 1995; at the time specified in paragraph (a)(1), (a)(2), or (a)(3) of this AD, as applicable.

(1) For any vertical beam on which neither the preventative modification nor the splice repair have been accomplished, as specified in Boeing Service Bulletin 727–53–0210, dated April 1, 1993; or Boeing Service Bulletin 727–53–0055, Revision 6, dated February 28, 1986, Revision 7, dated March 5, 1987, Revision 8, dated December 17, 1987, or Revision 9, dated August 3, 1989: Inspect prior to the accumulation of 20,000 total flight cycles, or within 1,500 flight cycles after the effective date of this AD, whichever occurs later.

(2) For any vertical beam on which the preventative modification has not been accomplished and the splice repair has been accomplished, as specified in Boeing Service Bulletin 727–53–0210, dated April 1, 1993, or Boeing Service Bulletin 727–53–0055, Revision 6, dated February 28, 1986, Revision 7, dated March 5, 1987, Revision 8, dated December 17, 1987, or Revision 9, dated August 3, 1989: Inspect prior to the accumulation of 20,000 flight cycles since installation of the splice repair, or within 1,500 flight cycles after the effective date of this AD, whichever occurs later.

(3) For any vertical beam on which the preventative modification has been accomplished and the splice repair has or has not been accomplished, as specified in Boeing Service Bulletin 727–53–0210, dated April 1, 1993, or Boeing Service Bulletin 727–53–0055, Revision 6, dated February 28, 1986, Revision 7, dated March 5, 1987, Revision 8, dated December 17, 1987, or Revision 9, dated August 3, 1989: Inspect prior to the accumulation of 40,000 flight cycles since installation of the preventative modification, or within 1,500 flight cycles after the effective date of this AD, whichever occurs later.

**Note 2:** For the purposes of this AD, a detailed inspection is defined as: ''An intensive visual examination of a specific structural area, system, installation, or assembly to detect damage, failure, or irregularity. Available lighting is normally supplemented with a direct source of good lighting at intensity deemed appropriate by the inspector. Inspection aids such as mirror, magnifying lenses, etc. may be used. Surface cleaning and elaborate access procedures may be required.''

**Repetitive Inspections and Corrective Action**

(b) If no crack is detected during any inspection required by paragraph (a)(1), (a)(2), or (a)(3) of this AD, accomplish either paragraph (b)(1) or (b)(2) of this AD, as applicable, in accordance with Boeing Service Bulletin 727–53–0210, dated April 1, 1993, as revised by Notice of Status Change 727–53–0210 NSC 1, dated June 17, 1993, and Notice of Status Change 727–53–0210 NSC 2, dated September 21, 1995.

(1) For any vertical beam on which the preventative modification has not been accomplished, as specified in paragraphs (a)(1) and (a)(2) of this AD, accomplish either paragraph (b)(1)(i) or (b)(1)(ii) of this AD in accordance with the service bulletin.

(i) Prior to further flight, install the preventative modification. Prior to the accumulation of 40,000 flight cycles following accomplishment of a preventative modification, accomplish the detailed visual and HFEC inspections specified in paragraph (a) of this AD for any modified area. Repeat those inspections thereafter at intervals not to exceed 6,000 flight cycles for that modified area. Or

(ii) Repeat the detailed visual and HFEC inspections specified in paragraph (a) of this AD for any unmodified area at intervals not to exceed 3,000 flight cycles.

(2) For any vertical beam on which the preventative modification has been accomplished, repeat the detailed visual and HFEC inspections specified in paragraph (a) of this AD thereafter at intervals not to exceed 6,000 flight cycles.

(c) If any crack is detected during any inspection required by paragraph (a)(1), (a)(2), or (a)(3) of this AD, prior to further flight, install a splice repair and preventative modification to all cracked door frames, in accordance with Boeing Service Bulletin 727–53–0210, dated April 1, 1993, as revised by Notice of Status Change 727–53–0210 NSC 1, dated June 17, 1993, and Notice of Status Change 727–53–0210 NSC 2, dated September 21, 1995. Prior to the accumulation of 40,000 flight cycles following accomplishment of the preventative modification, accomplish the detailed visual and HFEC inspections specified in paragraph (a) of this AD. Repeat those inspections specified in paragraph (a) for that repaired and modified area thereafter at intervals not to exceed 6,000 flight cycles.

**Alternative Method of Compliance**

(d) An alternative method of compliance or adjustment of the compliance time that provides an acceptable level of safety may be used if approved by the Manager, Seattle Aircraft Certification Office (ACO), FAA, Transport Airplane Directorate. Operators shall submit their requests through an appropriate FAA Principal Maintenance Inspector, who may add comments and then send it to the Manager, Seattle ACO.

**Note 3:** Information concerning the existence of approved alternative methods of compliance with this AD, if any, may be obtained from the Seattle ACO.

**Special Flight Permits**

(e) Special flight permits may be issued in accordance with sections 21.197 and 21.199 of the Federal Aviation Regulations (14 CFR 21.197 and 21.199) to operate the airplane to a location where the requirements of this AD can be accomplished.

**Incorporation by Reference**

(f) The actions shall be done in accordance with Boeing Service Bulletin 727–53–0210, dated April 1, 1993, as revised by Notice of Status Change 727–53–0210 NSC 1, dated June 17, 1993, and Notice of Status Change 727–53–0210 NSC 2, dated September 21, 1995. This incorporation by reference was approved by the Director of the **Federal Register** in accordance with 5 U.S.C. 552(a) and 1 CFR part 51. Copies may be obtained from Boeing Commercial Airplane Group, P.O. Box 3707, Seattle, Washington 98124–2207. Copies may be inspected at the FAA, Transport Airplane Directorate, 1601 Lind Avenue, SW., Renton, Washington; or at the Office of the Federal Register, 800 North Capitol Street, NW., suite 700, Washington, DC.

(g) This amendment becomes effective on October 5, 1999.

Issued in Renton, Washington, on August 23, 1999.

**Vi L. Lipski,**

*Acting Manager,*

*Transport Airplane Directorate,*

*Aircraft Certification Service.*

[FR Doc. 99–22397 Filed 8–30–99; 8:45 am]

BILLING CODE 4910–13–U

---

## DEPARTMENT OF TRANSPORTATION

## Federal Aviation Administration

## 14 CFR Part 39

**[Docket No. 99–NM–224–AD; Amendment 39–11278; AD 99–18–12]**

**RIN 2120–AA64**

## Airworthiness Directives; Fokker Model F27 Mark 050 Series Airplanes

**AGENCY:** Federal Aviation Administration, DOT.

**ACTION:** Final rule; request for comments.

**SUMMARY:** This amendment adopts a new airworthiness directive (AD), applicable to all Fokker Model F27 Mark 050 series airplanes. This action requires a one-time inspection to detect cracking of the fuselage between stations 15375 and 16275, at the skin splice above the cabin windows; and corrective action, if necessary. This amendment is prompted by issuance of mandatory continuing airworthiness information by a foreign civil airworthiness authority. The actions specified in this AD are intended to detect and correct such cracking, which could result in depressurization of the cabin and reduced structural integrity of the airplane fuselage.

**DATES:** Effective September 15, 1999.

The incorporation by reference of certain publications listed in the regulations is approved by the Director of the Federal Register as of September 15, 1999.

Comments for inclusion in the Rules Docket must be received on or before September 30, 1999.

**ADDRESSES:** Submit comments in triplicate to the Federal Aviation Administration (FAA), Transport Airplane Directorate, ANM–114, Attention: Rules Docket No. 99–NM–224–AD, 1601 Lind Avenue, SW., Renton, Washington 98055–4056.

The service information referenced in this AD may be obtained from Fokker Services B.V., P.O. Box 231, 2150 AE Nieuw-Vennep, The Netherlands. This information may be examined at the FAA, Transport Airplane Directorate, 1601 Lind Avenue, SW., Renton, Washington; or at the Office of the Federal Register, 800 North Capitol Street, NW., suite 700, Washington, DC.

**FOR FURTHER INFORMATION CONTACT:** Norman B. Martenson, Manager, International Branch, ANM–116, FAA, Transport Airplane Directorate, 1601 Lind Avenue, SW., Renton, Washington 98055–4056; telephone (425) 227–2110; fax (425) 227–1149.

**SUPPLEMENTARY INFORMATION:** The Rijksluchtvaartdienst (RLD), which is the airworthiness authority for the Netherlands, notified the FAA that an unsafe condition may exist on all Fokker Model F27 Mark 050 series airplanes. The RLD advises that a report was received of a crack that had been discovered on the left-hand side of the fuselage between stations 15375 and 16275, at the skin splice above the cabin windows. Subsequent investigation of the skin splice revealed that the crack had initiated at a scratch in the bonded doubler at the edge of the lower skin. Fatigue caused the crack to grow to 21.3 inches (540 mm) undetected, until the skin splice opened, due to overload. This resulted in pressurization problems during climb of the airplane, leading to the detection of the crack. This condition, if not corrected, could result in depressurization of the cabin and reduced structural integrity of the airplane fuselage.

**Explanation of Relevant Service Information**

Fokker has issued Service Bulletin SBF50–53–053, dated February 1, 1997, which describes procedures for a one-time eddy current inspection to detect cracking of the fuselage between stations 15375 and 16275, at the skin splice above the cabin windows. The RLD classified this service bulletin as mandatory and issued Dutch airworthiness directive 1997–022 (A), dated February 28, 1997, in order to assure the continued airworthiness of these airplanes in the Netherlands.

**FAA's Conclusions**

This airplane model is manufactured in the Netherlands and is type certificated for operation in the United States under the provisions of section 21.29 of the Federal Aviation Regulations (14 CFR 21.19) and the

applicable bilateral airworthiness agreement. Pursuant to this bilateral airworthiness agreement, the RLD has kept the FAA informed of the situation described above. The FAA has examined the findings of the RLD, reviewed all available information, and determined that AD action is necessary for products of this type design that are certificated for operation in the United States.

### Explanation of Requirements of the Rule

Since an unsafe condition has been identified that is likely to exist or develop on other airplanes of the same type design registered in the United States, this AD is being issued to detect and correct cracking of the fuselage between stations 15375 and 16275, at the skin splice above the cabin windows, and corrective action, if necessary. This AD requires accomplishment of the actions specified in the service bulletin described previously, except as discussed below.

### Differences Between Proposed Rule and Service Information/Dutch Airworthiness Directive

Operators should note that, although the service bulletin and Dutch airworthiness directive specify that the manufacturer may be contacted for disposition of certain repair conditions, this proposal would require the repair of those conditions to be accomplished in accordance with a method approved by the FAA.

### Cost Impact

None of the airplanes affected by this action are on the U.S. Register. All airplanes included in the applicability of this rule currently are operated by non-U.S. operators under foreign registry; therefore, they are not directly affected by this AD action. However, the FAA considers that this rule is necessary to ensure that the unsafe condition is addressed in the event that any of these subject airplanes are imported and placed on the U.S. Register in the future.

Should an affected airplane be imported and placed on the U.S. Register in the future, it would require approximately 2 work hours to accomplish the required inspection, at an average labor rate of $60 per work hour. Based on these figures, the cost impact of this AD would be $120 per airplane.

### Determination of Rule's Effective Date

Since this AD action does not affect any airplane that is currently on the U.S. register, it has no adverse economic impact and imposes no additional burden on any person. Therefore, prior notice and public procedures hereon are unnecessary and the amendment may be made effective in less than 30 days after publication in the **Federal Register.**

### Comments Invited

Although this action is in the form of a final rule and was not preceded by notice and opportunity for public comment, comments are invited on this rule. Interested persons are invited to comment on this rule by submitting such written data, views, or arguments as they may desire. Communications shall identify the Rules Docket number and be submitted in triplicate to the address specified under the caption **ADDRESSES**. All communications received on or before the closing date for comments will be considered, and this rule may be amended in light of the comments received. Factual information that supports the commenter's ideas and suggestions is extremely helpful in evaluating the effectiveness of the AD action and determining whether additional rulemaking action would be needed.

Comments are specifically invited on the overall regulatory, economic, environmental, and energy aspects of the rule that might suggest a need to modify the rule. All comments submitted will be available, both before and after the closing date for comments, in the Rules Docket for examination by interested persons. A report that summarizes each FAA-public contact concerned with the substance of this AD will be filed in the Rules Docket.

Commenters wishing the FAA to acknowledge receipt of their comments submitted in response to this rule must submit a self-addressed, stamped postcard on which the following statement is made: ''Comments to Docket Number 99–NM–224–AD.'' The postcard will be date stamped and returned to the commenter.

### Regulatory Impact

The regulations adopted herein will not have substantial direct effects on the States, on the relationship between the national government and the States, or on the distribution of power and responsibilities among the various levels of government. Therefore, in accordance with Executive Order 12612, it is determined that this final rule does not have sufficient federalism implications to warrant the preparation of a Federalism Assessment.

For the reasons discussed above, I certify that this action (1) is not a ''significant regulatory action'' under Executive Order 12866; (2) is not a ''significant rule'' under DOT Regulatory Policies and Procedures (44 FR 11034, February 26, 1979); and (3) will not have a significant economic impact, positive or negative, on a substantial number of small entities under the criteria of the Regulatory Flexibility Act. A final evaluation has been prepared for this action and it is contained in the Rules Docket. A copy of it may be obtained from the Rules Docket at the location provided under the caption **ADDRESSES.**

### List of Subjects in 14 CFR Part 39

Air transportation, Aircraft, Aviation safety, Incorporation by reference, Safety.

### Adoption of the Amendment

Accordingly, pursuant to the authority delegated to me by the Administrator, the Federal Aviation Administration amends part 39 of the Federal Aviation Regulations (14 CFR part 39) as follows:

## PART 39—AIRWORTHINESS DIRECTIVES

1. The authority citation for part 39 continues to read as follows:

**Authority:** 49 U.S.C. 106(g), 40113, 44701.

### § 39.13 [Amended]

2. Section 39.13 is amended by adding the following new airworthiness directive:

**99–18–12 Fokker Services B.V.:** Amendment 39–11278. Docket 99–NM–224–AD.

*Applicability:* All Model F27 Mark 050 series airplanes, certificated in any category.

**Note 1:** This AD applies to each airplane identified in the preceding applicability provision, regardless of whether it has been modified, altered, or repaired in the area subject to the requirements of this AD. For airplanes that have been modified, altered, or repaired so that the performance of the requirements of this AD is affected, the owner/operator must request approval for an alternative method of compliance in accordance with paragraph (c) of this AD. The request should include an assessment of the effect of the modification, alteration, or repair on the unsafe condition addressed by this AD; and, if the unsafe condition has not been eliminated, the request should include specific proposed actions to address it.

*Compliance:* Required as indicated, unless accomplished previously.

To detect cracking of the fuselage between stations 15375 and 16275, at the skin splice above the cabin windows, which could result in depressurization of the cabin and reduced structural integrity of the airplane fuselage, accomplish the following:

(a) Prior to the accumulation of 10,000 total flight cycles, or within 6 months after the effective date of this AD, whichever occurs later, perform a one-time eddy current inspection to detect cracking of the fuselage

between stations 15375 and 16275, at the skin splice above the cabin windows, in accordance with the Accomplishment Instructions of Fokker Service Bulletin SBF50–53–053, dated February 1, 1997.

(b) If any crack is found during the inspection required by paragraph (a) of this AD: Prior to further flight, repair in accordance with a method approved by the Manager, International Branch, ANM–116, FAA, Transport Airplane Directorate. For a repair method to be approved by the Manager, International Branch, ANM–116, as required by this paragraph, the Manager's approval letter must specifically reference this AD.

**Alternative Methods of Compliance**

(c) An alternative method of compliance or adjustment of the compliance time that provides an acceptable level of safety may be used if approved by the Manager, International Branch, ANM–116. Operators shall submit their requests through an appropriate FAA Principal Maintenance Inspector, who may add comments and then send it to the Manager, International Branch, ANM–116.

**Note 2:** Information concerning the existence of approved alternative methods of compliance with this AD, if any, may be obtained from the International Branch, ANM–116.

**Special Flight Permits**

(d) Special flight permits may be issued in accordance with sections 21.197 and 21.199 of the Federal Aviation Regulations (14 CFR 21.197 and 21.199) to operate the airplane to a location where the requirements of this AD can be accomplished.

**Incorporation by Reference**

(e) Except as provided by paragraph (b) of this AD, the actions shall be done in accordance with Fokker Service Bulletin SBF50–53–053, dated February 1, 1997. This incorporation by reference was approved by the Director of the Federal Register in accordance with 5 U.S.C. 552(a) and 1 CFR part 51. Copies may be obtained from Fokker Services B.V., P.O. Box 231, 2150 AE Nieuw-Vennep, The Netherlands. Copies may be inspected at the FAA, Transport Airplane Directorate, 1601 Lind Avenue, SW., Renton, Washington; or at the Office of the Federal Register, 800 North Capitol Street, NW., suite 700, Washington, DC.

**Note 3:** The subject of this AD is addressed in Dutch airworthiness directive 1997–022 (A), dated February 28, 1997.

(f) This amendment becomes effective on September 15, 1999.

Issued in Renton, Washington, on August 23, 1999.

**Vi L. Lipski,**

*Acting Manager, Transport Airplane Directorate, Aircraft Certification Service.*

[FR Doc. 99–22392 Filed 8–30–99; 8:45 am]

BILLING CODE 4910–13–U

## DEPARTMENT OF TRANSPORTATION

## Federal Aviation Administration

## 14 CFR Part 39

**[Docket No. 98–NM–201–AD; Amendment 39–11272; AD 99–18–06]**

**RIN 2120–AA64**

## Airworthiness Directives; Aerospatiale Model ATR42–300 and ATR42–320 Series Airplanes

**AGENCY:** Federal Aviation Administration, DOT.

**ACTION:** Final rule.

**SUMMARY:** This amendment adopts a new airworthiness directive (AD), applicable to certain Aerospatiale Model ATR42–300 and ATR42–320 series airplanes, that requires a one-time inspection for cracking of a fastener hole located on the lower surface of the outer wing, and repair, if necessary; and cold working of the hole and installation of a new fastener in the hole. This amendment is prompted by issuance of mandatory continuing airworthiness information by a foreign civil airworthiness authority. The actions specified by this AD are intended to prevent fatigue damage on the outer wing and consequent reduced structural integrity of the wing.

**DATES:** Effective October 5, 1999.

The incorporation by reference of certain publications listed in the regulations is approved by the Director of the Federal Register as of October 5, 1999.

**ADDRESSES:** The service information referenced in this AD may be obtained from Aerospatiale, 316 Route de Bayonne, 31060 Toulouse, Cedex 03, France. This information may be examined at the Federal Aviation Administration (FAA), Transport Airplane Directorate, Rules Docket, 1601 Lind Avenue, SW., Renton, Washington; or at the Office of the Federal Register, 800 North Capitol Street, NW., suite 700, Washington, DC.

**FOR FURTHER INFORMATION CONTACT:** Norman B. Martenson, Manager, International Branch, ANM–116, FAA, Transport Airplane Directorate, 1601 Lind Avenue, SW, Renton, Washington 98055–4056; telephone (425) 227–2110; fax (425) 227–1149.

**SUPPLEMENTARY INFORMATION:** A proposal to amend part 39 of the Federal Aviation Regulations (14 CFR part 39) to include an airworthiness directive (AD) that is applicable to certain Aerospatiale Model ATR42–300 and ATR42–320 series airplanes was published in the **Federal Register** on June 23, 1999 (64 FR 33441). That action proposed to require a one-time inspection for cracking of a fastener hole located on the lower surface of the outer wing, and repair, if necessary; and cold working of the hole and installation of a new fastener in the hole.

### Comments

Interested persons have been afforded an opportunity to participate in the making of this amendment. No comments were submitted in response to the proposal or the FAA's determination of the cost to the public.

### Conclusion

The FAA has determined that air safety and the public interest require the adoption of the rule as proposed.

### Cost Impact

The FAA estimates that 14 airplanes of U.S. registry will be affected by this AD, that it will take approximately 8 work hours per airplane to accomplish the required actions, and that the average labor rate is $60 per work hour. Required parts will be provided by the manufacturer at no cost to the operator. Based on these figures, the cost impact of the required AD on U.S. operators is estimated to be $6,720, or $480 per airplane.

The cost impact figure discussed above is based on assumptions that no operator has yet accomplished any of the requirements of this AD action, and that no operator would accomplish those actions in the future if this AD were not adopted.

### Regulatory Impact

The regulations adopted herein will not have substantial direct effects on the States, on the relationship between the national government and the States, or on the distribution of power and responsibilities among the various levels of government. Therefore, in accordance with Executive Order 12612, it is determined that this final rule does not have sufficient federalism implications to warrant the preparation of a Federalism Assessment.

For the reasons discussed above, I certify that this action (1) is not a ''significant regulatory action'' under Executive Order 12866; (2) is not a ''significant rule'' under DOT Regulatory Policies and Procedures (44 FR 11034, February 26, 1979); and (3) will not have a significant economic impact, positive or negative, on a substantial number of small entities under the criteria of the Regulatory Flexibility Act. A final evaluation has been prepared for this action and it is contained in the Rules Docket. A copy

of it may be obtained from the Rules Docket at the location provided under the caption **ADDRESSES**.

### List of Subjects in 14 CFR Part 39

Air transportation, Aircraft, Aviation safety, Incorporation by reference, Safety.

### Adoption of the Amendment

Accordingly, pursuant to the authority delegated to me by the Administrator, the Federal Aviation Administration amends part 39 of the Federal Aviation Regulations (14 CFR part 39) as follows:

## PART 39—AIRWORTHINESS DIRECTIVES

1. The authority citation for part 39 continues to read as follows:

**Authority:** 49 U.S.C. 106(g), 40113, 44701.

### § 39.13 [Amended]

2. Section 39.13 is amended by adding the following new airworthiness directive:

**99–18–06 Aerospatiale:** Amendment 39–11272. Docket 98–NM–201–AD.

*Applicability:* Model ATR42–300 and ATR42–320 series airplanes, serial numbers 3 through 59 inclusive; certificated in any category.

**Note 1:** This AD applies to each airplane identified in the preceding applicability provision, regardless of whether it has been modified, altered, or repaired in the area subject to the requirements of this AD. For airplanes that have been modified, altered, or repaired so that the performance of the requirements of this AD is affected, the owner/operator must request approval for an alternative method of compliance in accordance with paragraph (b) of this AD. The request should include an assessment of the effect of the modification, alteration, or repair on the unsafe condition addressed by this AD; and, if the unsafe condition has not been eliminated, the request should include specific proposed actions to address it.

*Compliance:* Required as indicated, unless accomplished previously.

To prevent fatigue damage on the outer wing and consequent reduced structural integrity of the wing, accomplish the following:

**Corrective Action**

(a) Prior to the accumulation of 33,000 total landings, or within 2,000 landings after the effective date of this AD, whichever occurs later, accomplish paragraphs (a)(1) and (a)(2) of this AD in accordance with Avions de Transport Regional Service Bulletin ATR42–57–0050, dated April 17, 1998.

(1) Perform a high frequency eddy current inspection to detect cracking of the fastener hole located on the lower surface of the outer wing near the spar/rib 15 junction. If any cracking is found, prior to further flight, repair the cracking in accordance with a method approved by either the Manager, International Branch, ANM–116, FAA, Transport Airplane Directorate, or the Direction Generale de l'Aviation Civile (or its delegated agent).

(2) Perform cold working of the fastener hole located on the lower surface of the outer wing near the spar/rib 15 junction, and install a new fastener in the hole.

**Alternative Methods of Compliance**

(b) An alternative method of compliance or adjustment of the compliance time that provides an acceptable level of safety may be used if approved by the Manager, International Branch, ANM–116. Operators shall submit their requests through an appropriate FAA Principal Maintenance Inspector, who may add comments and then send it to the Manager, International Branch, ANM–116.

**Note 2:** Information concerning the existence of approved alternative methods of compliance with this AD, if any, may be obtained from the International Branch, ANM–116.

**Special Flight Permits**

(c) Special flight permits may be issued in accordance with sections 21.197 and 21.199 of the Federal Aviation Regulations (14 CFR 21.197 and 21.199) to operate the airplane to a location where the requirements of this AD can be accomplished.

**Incorporation by Reference**

(d) Except as provided by paragraph (a)(1) of this AD, the actions shall be done in accordance with Avions de Transport Regional Service Bulletin ATR42–57–0050, dated April 17, 1998. This incorporation by reference was approved by the Director of the **Federal Register** in accordance with 5 U.S.C. 552(a) and 1 CFR part 51. Copies may be obtained from Aerospatiale, 316 Route de Bayonne, 31060 Toulouse, Cedex 03, France. Copies may be inspected at the FAA, Transport Airplane Directorate, 1601 Lind Avenue, SW., Renton, Washington; or at the Office of the **Federal Register**, 800 North Capitol Street, NW., suite 700, Washington, DC.

**Note 3:** The subject of this AD is addressed in French airworthiness directive 98–147–075(B), dated April 8, 1998.

(e) This amendment becomes effective on October 5, 1999.

Issued in Renton, Washington, on August 23, 1999.

**Vi L. Lipski,**

*Acting Manager, Transport Airplane Directorate, Aircraft Certification Service.*

[FR Doc. 99–22389 Filed 8–30–99; 8:45 am]

BILLING CODE 4910–13–P

## DEPARTMENT OF TRANSPORTATION

## Federal Aviation Administration

## 14 CFR Part 71

**[Airspace Docket No. 99–AWA–1]**

**RIN 2120–AA66**

## Revision to the Legal Description of the Riverside, March Air Force Base (AFB), Class C Airspace Area; CA

**AGENCY:** Federal Aviation Administration (FAA), DOT.

**ACTION:** Final rule.

**SUMMARY:** This action revises the legal description of the Riverside March AFB, CA, Class C airspace area by replacing references to the former active duty AFB with the current civil/military joint-use designation of ''March Field.'' Additionally, this action changes the legal description to reflect the current operating hours for the Class C airspace area which are consistent with the current mission requirements of the U.S. Air Force (USAF) Reserve, the U.S. Customs Service, and other tenants operating at this airport. The Class C airspace area is designated effective during the specific days and times of operation of the March Ground Controlled Approach (GCA) facility as established in advance by a Notice to Airmen (NOTAM). The effective dates and times will thereafter be continuously published in the Airport/Facility Directory. This action will not change the actual dimensions, configuration, or operating requirements of the Riverside, March Field, CA, Class C airspace area.

**EFFECTIVE DATE:** November 4, 1999.

**FOR FURTHER INFORMATION CONTACT:** Ken McElroy, Airspace and Rules Division, ATA–400, Office of Air Traffic Airspace Management, Federal Aviation Administration, 800 Independence Avenue, SW., Washington, DC 20591; telephone: (202) 267–8783.

**SUPPLEMENTARY INFORMATION:**

### Background

On May 7, 1997, the USAF Reserve and the March Joint Powers Authority (JPA) entered into a formal agreement for military-civilian joint-use of the former Riverside, March AFB. The Riverside, March Field, Class C airspace area remains an essential safety measure in support of the ongoing mission requirements of key March Field tenants which include the 336th Air Refueling Squadron and the 729th Airlift Squadron of the U.S. Air Force Reserve's 452nd Air Mobility Wing, the U. S. Customs Service Domestic Air

Interdiction Center, the 163rd Air Refueling Wing of the California Air National Guard, and the March Aero Club.

On March 25, 1999, the FAA published an NPRM (64 FR 14410) that proposed to modify the Riverside, March Field, Class C airspace area. Interested parties were invited to participate in this rulemaking proceeding by submitting comments on the proposal to the FAA. No comments were received. Except for editorial changes, this amendment is the same as that proposed in the notice.

## The Rule

This amendment to part 71 of The Federal Aviation Regulations (14 CFR part 71) revises the legal description of the Riverside, March AFB Class C airspace area located at Riverside, CA. The current legal description for the Riverside, March AFB Class C airspace area refers to an AFB that has been deactivated. This action is a technical amendment to the legal description and will not change the actual dimensions, configuration, or operating requirements of the Riverside, March AFB Class C airspace area.

The coordinates for this airspace docket are based on North American Datum 83. Class C airspace areas are published in paragraph 4000 of FAA Order 7400.9F, dated September 10, 1998, and effective September 16, 1998, which is incorporated by reference in 14 CFR 71.1. The Class C airspace area listed in this document will be published subsequently in the Order.

The FAA has determined that this regulation only involves an established body of technical regulations for which frequent and routine amendments are necessary to keep them operationally current. Therefore, this Regulation: (1) Is not a ''significant regulatory action'' under Executive Order 12866; (2) is not a ''Significant rule'' under DOT Regulatory Policies and Procedures (44 FR 11034; February 26, 1979); and (3) does not warrant preparation of a regulatory evaluation as the anticipated impact is so minimal. Since this is a routine matter that will only affect air traffic procedures and air navigation, it is certified that this proposed rule, when promulgated, will not have a significant economic impact on a substantial number of small entities under the criteria of the Regulatory Act.

## List of Subjects in 14 CFR Part 71

Airspace, Incorporation by reference, Navigation (air).

## Adoption of the Amendment

In consideration of the foregoing, the Federal Aviation Administration amends 14 CFR part 71 as follows:

## PART 71—DESIGNATION OF CLASS A, CLASS B, CLASS C, CLASS D, AND CLASS E AIRSPACE AREAS; AIRWAYS; ROUTES; AND REPORTING POINTS

1. The authority citation for 14 CFR part 71 continues to read as follows:

**Authority:** 49 U.S.C. 106(g), 40103, 40113, 40120; E.O. 10854, 24 FR 9565, 3 CFR, 1959–1963 Comp., p. 389.

### § 71.1 [Amended]

2. The incorporation by reference in 14 CFR 71.1 of the Federal Aviation Administration Order 7400.9F, Airspace Designations and Reporting Points, dated September 10, 1998, and effective September 16, 1998, is amended as follows:

*Paragraph 4000 Class C Airspace*

* * * * *

**AWP CA C Riverside March Field, CA [Revised]**

Riverside, March Field, CA
(Lat. 33°52′50″ N., long. 117°15′34″ W.)

That airspace extending upward from the surface to and including 5,500 feet MSL within a 5-mile radius of March Field; and that airspace extending upward from 3,900 feet MSL to and including 5,500 feet MSL within the 10-mile radius of March Field from the centerline of V–16/V–370 east of the airport clockwise to the 216° bearing from the airport and that airspace extending upward from 2,900 feet MSL to but not including 3,900 feet MSL within 2 miles east and 1.5 miles west of the 150° bearing from the airport extending from the 5-mile radius to the 10-mile radius of the airport. This Class C airspace area is effective during the specific days and hours of operation of the March GCA facility as established in advance by a Notice to Airmen. The effective dates and times will thereafter be continuously published in the Airport/Facility Directory.

* * * * *

Issued in Washington, DC on August 25, 1999.

**Reginald C. Matthews,**

*Manager, Airspace and Rules Division.*

[FR Doc. 99–22609 Filed 8–30–99; 8:45 am]

BILLING CODE 4910–13–P

## DEPARTMENT OF TRANSPORTATION

## Federal Aviation Administration

## 14 CFR Part 71

**[Airspace Docket No. 99–ACE–40]**

## Amendment to Class E Airspace; Nevada, MO

**AGENCY:** Federal Aviation Administration (FAA), DOT.

**ACTION:** Direct final rule; request for comments.

**SUMMARY:** This action amends Class E airspace area at Nevada Municipal Airport, Nevada, MO. A review of the Class E airspace area for Nevada Municipal Airport indicates it does not comply with the criteria for 700 feet Above Ground Level (AGL) airspace required for diverse departures as specified in FAA Order 7400.2D. The Class E airspace has been enlarged to conform to the criteria of FAA Order 7400.2D.

In addition, the Nevada Non Directional Radio Beacon (NDB) and coordinates have been included in the text header and the legal description for Nevada Municipal Airport.

The intended effect of this rules to provide additional controlled Class E airspace for aircraft operating under Instrument Flight Rules (IFR), include reference to Nevada NDB, and comply with the criteria of FAA Order 7400.2D.

**DATES:** Effective date: 0901 UTC, November 4, 1999.

Comments for inclusion in the Rules Docket must be received on or before September 19, 1999.

**ADDRESSES:** Send comments regarding the rule in triplicate to: Manager, Airspace Branch, Air Traffic Division, ACE–520, Federal Aviation Administration, Docket Number 99–ACE–40, 601 East 12th Street, Kansas City, MO 64106.

The official docket may be examined in the Office of the Regional Counsel for the Central Region at the same address between 9:00 a.m. and 3:00 p.m., Monday through Friday, except Federal holidays.

An informal docket may also be examined during normal business hours in the Air Traffic Division at the same address listed above.

**FOR FURTHER INFORMATION CONTACT:** Kathy Randolph, Air Traffic Division, Airspace Branch, ACE–520C, Federal Aviation Administration, 601 East 12th Street, Kansas City, MO 64106; telephone: (816) 426–3408.

**SUPPLEMENTARY INFORMATION:** This amendment to 14 CFR 71 revises the

Class E airspace at Nevada, MO. A review of the Class E airspace for Nevada Municipal Airport, MO, indicates it does not meet the criteria for 700 feet AGL airspace required for diverse departures as specified in FAA Order 7400.2D. The criteria in FAA Order 7400.2D for an aircraft to reach 1200 feet AGL is based on a standard climb gradient of 200 feet per mile plus the distance from the Airport Reference Point (ARP) to the end of the outermost runway. Any fractional part of a mile is converted to the next higher tenth of a mile. The amendment at Nevada Municipal, MO, will provide additional controlled airspace for aircraft operating under IFR, include reference to the Nevada NDB, and comply with the criteria of FAA Order 7400.2D. The area will be depicted on appropriate aeronautical charts. Class E airspace areas extending upward from 700 feet or more above the surface of the earth are published in paragraph 6005 of the FAA Order 7400.9F, dated September 10, 1998, and effective September 16, 1998, which is incorporated by reference in 14 CFR 71.1. The Class E airspace designation listed in this document will be published subsequently in the Order.

## The Direct Final Rule Procedure

The FAA anticipates that this regulation will not result in adverse or negative comment and, therefore, is issuing it as a direct final rule. Previous action of this nature have not been controversial and have not resulted in adverse comments or objections. The amendment will enhance safety for all flight operations by designation an area where VFR pilots may anticipate the presence of IFR aircraft at lower altitudes, especially during inclement weather conditions. A greater degree of safety is achieved by the area on aeronautical charts. Unless a written adverse or negative comment, or a written notice of intent to submit an adverse or negative comment is received within the comment period, the regulation will become effective on the date specified above. After the close of the comment period, the FAA will publish a document in the **Federal Register** indicating that no adverse or negative comments were received and conforming the date on which the final rule will become effective. If the FAA does receive, within the comment period, an adverse or negative comments, or written notice of intent to submit such a comment, a document withdrawing the direct final rule will be published in the **Federal Register**, and a notice of a proposed rulemaking may be published with a new comment period.

## Comments Invited

Although this action is in the form of a final rule and was not preceded by a notice of proposed rulemaking, comments are invited on this rule. Interested persons are invited to comment on this rule by submitting such written data, views, or arguments as they may desire. Communications should identify the Rule Docket number and be submitted in triplicate to the address specified under the caption **ADDRESSES**. All communications received on or before the closing date for comments will be considered, and this rule may be amended or withdrawn in light of the comments received. Factual information that supports the commenter's ideas and suggestions is extremely helpful in evaluating the effectiveness of this action and determining whether additional rulemaking action would be needed.

Comments are specifically invited on the overall regulatory, economic, environmental, and energy-related aspects of the rule that might suggest a need to modify the rule. All comments submitted will be available, both before and after the closing date for comments, in the Rules Docket for examination by interested persons. A report that summarizes each FAA-public contact concerned with the substance of this action will be filed in the Rules Docket.

Commenters wishing the FAA to acknowledge receipt of their comments submitted in response to this rule must submit a self-addressed, stamped postcard on which the following statement is made: ''Comments to Docket No. 99–ACE–40.'' The postcard will be date stamped and returned to the commenter.

## Agency Findings

The regulation adopted herein will not have substantial direct effects on the States, on the relationship between the national government and the States, or on the distribution of power and responsibilities among the various levels of government. Therefore, in accordance with Executive Order 12612, it is determined that this final rule does not have sufficient federalism implications to warrant the preparation of a Federalism Assessment.

The FAA has determined that this regulation is noncontroversial and unlikely to result in adverse or negative comments. For the reasons discussed in the preamble, I certify that this regulation (1) is not a ''significant regulatory action'' under Executive Order 12866; (2) is not a ''significant rule'' under Department of Transportation (DOT) Regulatory Policies and Procedures (44 FR 11034, February 26, 1979); and (3) if promulgated, will not have a significant economic impact, positive or negative, on a substantial number of small entities under the criteria of the Regulatory Flexibility Act.

## List of Subjects in 14 CFR Part 71

Airspace, Incorporation by reference, Navigation (air).

## Adoption of the Amendment

Accordingly, the Federal Aviation Administration amends 14 CFR part 71 as follows:

## PART 71—DESIGNATION OF CLASS A, CLASS B, CLASS C, CLASS D, AND CLASS E AIRSPACE AREAS; AIRWAYS; ROUTES; AND REPORTING POINTS

1. The authority citation for part 71 continues to read as follows:

**Authority:** 49 U.S.C. 106(g), 40103, 40113, 40120; E.O. 10854, 24 FR 9565, 3 CFR, 1959–1963 Comp., p. 389.

### § 71.1 [Amended]

2. The incorporation by reference in 14 CFR 71.1 of Federal Aviation Administration Order 7400.9F, Airspace Designations and Reporting Points, dated September 10, 1998, and effective September 16, 1998, is amended as follows:

*Paragraph 6005 Class E airspace areas extending upward from 700 feet or more above the surface of the earth.*

* * * * *

**ACE MO E5 Nevada, MO [Revised]**

Nevada Municipal Airport, MO
(Lat. 35°51′07″ N., long. 94°18′18″ W.)
Nevada NDB
(Lat. 37°51′32″ N., long. 95°18′10″ W.)

That airspace extending upward from 700 feet above the surface within a 6.6-mile radius of Nevada Municipal Airport and within 2.6 miles each side of the 036° bearing from the Nevada NDB, extending from the 6l6-mile radius to 7.5 miles northeast of the airport.

Issued in Kansas City, MO, on August 11, 1999.

**Richard L. Day,**

*Acting Manager, Air Traffic Division, Central Region.*

[FR Doc. 99–22220 Filed 8–30–99 8:45 am]

BILLING CODE 4910–13–M

**DEPARTMENT OF TRANSPORTATION**

**Federal Aviation Administration**

**14 CFR Part 97**

**[Docket No. 29708; Amdt. No. 1946]**

## Standard Instrument Approach Procedures; Miscellaneous Amendments

**AGENCY:** Federal Aviation Administration (FAA), DOT.

**ACTION:** Final rule.

**SUMMARY:** This amendment establishes, amends, suspends, or revokes Standard Instrument Approach Procedures (SIAPs) for operations at certain airports. These regulatory actions are needed because of the adoption of new or revised criteria, or because of changes occurring in the National Airspace System, such as the commissioning of new navigational facilities, addition of new obstacles, or changes in air traffic requirements. These changes are designed to provide safe and efficient use of the navigable airspace and to promote safe flight operations under instrument flight rules at the affected airports.

**DATES:** An effective date for each SIAP is specified in the amendatory provisions.

Incorporation by reference-approved by the Director of the Federal Register on December 31, 1980, and reapproved as of January 1, 1982.

**ADDRESSES:** Availability of matters incorporated by reference in the amendment is as follows:

*For Examination*—1. FAA Rules Docket, FAA Headquarters Building, 800 Independence Avenue, SW., Washington, DC 20591;

2. The FAA Regional Office of the region in which the affected airport is located; or

3. The Flight Inspection Area Office which originated the SIAP.

*For Purchase*—Individual SIAP copies my be obtain from:

1. FAA Public Inquiry Center (APA–200), FAA Headquarters Building, 800 Independence Avenue, SW., Washington, DC 20591; or

2. The FAA Regional Office of the region in which the affected airport is located.

*By Subscription*—Copies of all SIAPs, mailed once every 2 weeks, are for sale by the Superintendent of Documents, U.S. Government Printing Office, Washington, DC 20402.

**FOR FURTHER INFORMATION CONTACT:** Donald P. Pate, Flight Procedure Standards Branch (AMCAFS—420), Flight Technologies and Programs Division, Flight Standards Service, Federal Aviation Administration, Mike Monroney Aeronautical Center, 6500 South MacArthur Blvd. Oklahoma City, OK. 73169 (Mail Address: P.O. Box 25082 Oklahoma City, OK. 73125) telephone: (405) 954–4164.

**SUPPLEMENTARY INFORMATION:** This amendment to part 97 of the Federal Aviation Regulations (14 CFR part 97) establishes, amends, suspends, or revokes Standard Instrument Approach Procedures (SIAPs). The complete regulatory description of each SIAP is contained in official FAA form documents which are incorporated by reference in this amendment under 5 U.S.C. 552(a), 1 CFR part 51, and § 97.20 of the Federal Aviation Regulations (FAR). The applicable FAA Forms are identified as FAA Forms 8260–3, 8260–4, and 8260–5. Materials incorporated by reference are available for examination or purchase as stated above.

The large number of SIAPs, their complex nature, and the need for a special format make their verbatim publication in the **Federal Register** expensive and impractical. Further, airmen do not use the regulatory text of the SIAPs, but refer to their graphic depiction on charts printed by publishers of aeronautical materials. Thus, the advantages of incorporation by reference are realized and publication of the complete description of each SIAP contained in FAA form documents is unnecessary. The provisions of this amendment state the affected CFR (and FAR) sections, with the types and effective dates of the SIAPs. This amendment also identifies the airport, its location, the procedure identification and the amendment number.

### The Rule

This amendment to part 97 is effective upon publication of each separate SIAP as contained in the transmittal. Some SIAP amendments may have been previously issued by the FAA in a National Flight Data Center (NFDC) Notice to Airmen (NOTAM) as an emergency action of immediate flight safety relating directly to published aeronautical charts. The circumstances which created the need for some SIAP amendments may require making them effective in less than 30 days. For the remaining SIAPs, an effective date at least 30 days after publication is provided.

Further, the SIAPs contained in this amendment are based on the criteria contained in the U.S. Standard for Terminal Instrument Procedures (TERPS). In developing these SIAPs, the TERPS criteria were applied to the conditions existing or anticipated at the affected airports. Because of the close and immediate relationship between these SIAPs and safety in air commerce, I find that notice and public procedure before adopting these SIAPs are impracticable and contrary to the public interest and, where applicable, that good cause exists for making some SIAPs effective in less than 30 days.

### Conclusion

The FAA has determined that this regulation only involves an established body of technical regulations for which frequent and routine amendments are necessary to keep them operationally current. It, therefore—(1) is not a ''significant regulatory action'' under Executive Order 12866; (2) is not a ''significant rule'' under DOT Regulatory Policies and Procedures (44 FR 11034; February 26, 1979); and (3) does not warrant preparation of a regulatory evaluation as the anticipated impact is so minimal. For the same reason, the FAA certifies that this amendment will not have a significant economic impact on a substantial number of small entities under the criteria of the Regulatory Flexibility Act.

### List of Subjects in 14 CFR Part 97

Air traffic control, Airports, Navigation (air).

Issued in Washington, DC on August 20, 1999.

**L. Nicholas Lacey,**

*Director, Flight Standards Service.*

### Adoption of the Amendment

Accordingly, pursuant to the authority delegated to me, part 97 of the Federal Aviation Regulations (14 CFR part 97) is amended by establishing, amending, suspending, or revoking Standard Instrument Approach Procedures, effective at 0901 UTC on the dates specified, as follows:

## PART 97—STANDARD INSTRUMENT APPROACH PROCEDURES

1. The authority citation for part 97 is revised to read as follows:

**Authority:** 49 U.S.C. 106(g), 40103, 40113, 40120, 44701; and 14 CFR 11.49(b)(2).

2. Part 97 is amended to read as follows:

By amending: § 97.23 VOR, VOR/DME, VOR or TACAN, and VOR/DME or TACAN; § 97.25 LOC, LOC/DME, LDA, LDA/DME, SDF, SDF/DME; § 97.27 NDB, NDB/DME; § 97.29 ILS, ILS/DME, ISMLS, MLS, MLS/DME, MLS/RNAV; § 97.31 RADAR SIAPs;

§ 97.33 RNAV SIAPs; and § 97.35 COPTER SIAPs, identified as follows:

*Effective September 9, 1999*

Atlanta, GA, The William B. Hartsfield Atlanta Intl, ILS RWY 9L, Amdt 6
Atlanta, GA, The William B. Hartsfield Atlanta Intl, ILS RWY 27R, Amdt 3
Falfurrias, TX, Brooks County, NDB RWY 35, Amdt 1
Falfurrias, TX, Brooks County, GPS RWY 17, Orig

*Effective October 7, 1999*

Denver, CO, Denver Intl, ILS RWY 34, Orig
Denver, CO, Denver Intl, ILS RWY 35L, Amdt 2
Denver, CO, Denver Intl, ILS RWY 35R, Orig
Denver, CO, Denver Intl, ILS/DME RWY 34, Amdt 1, CANCELLED
Denver, CO, Denver Intl, ILS/DME RWY 35R, Amdt 1, CANCELLED
Laredo, TX, Laredo Intl, ILS RWY 17R, Amdt 9
Blacksburg, VA, Virginia Tech, LOC/DME RWY 12, Orig
Blacksburg, VA, Virginia Tech, LOC/RWY RWY 12, Amdt 5, CANCELLED

*Effective November 4, 1999*

Little Rock, AR, Adams Field, GPS RWY 36, Orig
Little Rock, AR, Adams Field, VOR/DME RNAV or GPS RWY 36, Amdt 10 CANCELLED
Milton, FL, Peter Prince Field, GPS RWY 36, Amdt 1
Pompano Beach, FL, Pompano Beach Airpark, GPS RWY 33, Orig
Brunswick, GA, Glynco Jetport, GPS RWY 7, Orig
Brunswick, GA, Glynco Jetport, VOR/DME RNAV RWY 7, Amdt 6B, CANCELLED
Brunswick, GA, Glynco Jetport, GPS RWY 25, Orig
Brunswick, GA, Glynco Jetport, VOR/DME RNAV RWY 25, Amdt 6B, CANCELLED
Sheridan, IN, Sheridan, GPS RWY 5, Orig
Sheridan, IN, Sheridan, GPS RWY 23, Orig
Carroll, IA, Arthur N. Neu, GPS RWY 13, Amdt 1
Carroll, IA, Arthur N. Neu, GPS RWY 31, Amdt 1
Boston, MA, General Edward Lawrence Logan Intl, GPS RWY 27, Orig
Boston, MA, General Edward Lawrence Logan Intl, GPS RWY 33L, Orig
Ava, MO, Ava Bill Martin Memorial, VOR-A, Amdt 2
Ava, MO, Ava Bill Martin Memorial, NDB RWY 31, Amdt 1
Ava, MO, Ava Bill Martin Memorial, GPO RWY 13, Orig
Ava, MO, Ava Bill Martin Memorial, GPO RWY 31, Orig
York, NE, York Muni, NDB RWY 17, Amdt 4
Raton, NM, Raton Municipal/Crews Field, VOR/DME RWY 2, Amdt 7
Raton, NM, Raton Municipal/Crews Field, NDB RWY 2, Amdt 5
Raton, NM, Raton Municipal/Crews Field, GPS RWY 2, Amdt 1
Raton, NM, Raton Municipal/Crews Field, GPS RWY 25, Amdt 1
Greenville, NC, Pitt-Greenville, GPS RWY 1, Orig
Greenville, NC, Pitt-Greenville, GPS RWY 19, Orig
Barnesville, OH, Barnesville-Bradfield, GPS RWY 27, Orig
Chambersburg, PA, Chamberburg Muni, GPS RWY 24, Amdt 1
Indiana, PA, Indiana County/Jimmy Stewart Field, GPS RWY 10, Orig
Zelienople, PA, Zelienople Muni, GPS RWY 17, Amdt 1
Zelienople, PA, Zelienople Muni, GPS RWY 35, Amdt 1
North Kingstown, RI, Quonset State, VOR–A, Amdt 5
North Kingstown, RI, Quonset State, VOR RWY 34, Amdt 1
North Kingstown, RI, Quonset State, ILS RWY 16, Amdt 8
North Kingstown, RI, Quonset State, GPS RWY 34, Amdt 1
North Kingstown, RI, Quonset State, VOR/DME RNAV RWY 34, Amdt 2
Beaumont/Port Arthur, TX, Southeast Texas Regional, GPS RWY 12, Orig
Beaumont/Port Arthur, TX, Southeast Texas Regional, GPS RWY 16, Orig
Beaumont/Port Arthur, TX, Southeast Texas Regional, GPS RWY 30, Orig
College Station, TX, Easterwood Field, GPS RWY 16, Orig
College Station, TX, Easterwood Field, GPS RWY 28, Orig
Lockhart, TX, Lockhart Muni, GPS RWY 18, Orig
Lockhart, TX, Lockhart Muni, GPS RWY 36, Orig
Berkeley Springs, WV, Potomac Airpark, GPS RWY 11, Orig
Berkeley Springs, WV, Potomac Airpark, GPS RWY 29, Orig
Berkeley Springs, WV, Potomac Airpark, VOR/DME RNAV–A, Amdt 2
Morgantown, WV, Morgantown Muni-Walter L. Bill Hart Field, VOR OR GPS–A, Amdt 12
Morgantown, WV, Morgantown Muni-Walter L. Bill Hart Field, VOR/DME RWY 18, Amdt 7
Morgantown, WV, Morgantown Muni-Walter L. Bill Hart Field, ILS RWY 18, Amdt 12
Guernsey, WY, Camp Guernsey, GPS RWY 32, Orig

[FR Doc. 99–22611 Filed 8–30–99; 8:45 am]
BILLING CODE 4010–13–M

## DEPARTMENT OF TRANSPORTATION

## Coast Guard

## 33 CFR Part 117

**[CGD01–99–153]**

## Drawbridge Operation Regulations: Hutchinson River, NY

**AGENCY:** Coast Guard, DOT.

**ACTION:** Notice of temporary deviation from regulations.

**SUMMARY:** The Commander, first Coast Guard District, has issued a temporary deviation from the drawbridge operation regulations governing the operation of the Pelham Bay Railroad Bridge, mile 0.5, across the Hutchinson River in New York City, New York. This deviation allows the bridge owner to keep the bridge in the closed position from 7 a.m., on August 25, 1999, to 5 p.m., on August 27, 1999, and from 7 a.m., on September 1, 1999, to 5 p.m., on September 3, 1999. This action is necessary to facilitate replacement of the bridge miter rails and counterweight modifications.

**DATES:** This deviation is effective from August 25, 1999, to August 27, 1999, and from September 1, 1999, to September 3, 1999.

**FOR FURTHER INFORMATION CONTACT:** Joe Schmied, Project Officer, First Coast Guard District, at (212) 668–7165.

**SUPPLEMENTARY INFORMATION:** The Pelham Bay Railroad Bridge, at mile 0.5, across the Hutchinson River in New York City, New York, has a vertical clearance of 8 feet at mean high water, and 15 feet at mean low water in the closed position. The bridge is required to open on signal at all times. The bridge owner, AMTRAK, has requested a temporary deviation from the drawbridge operating regulations to facilitate necessary maintenance for the replacement of the bridge miter rails and counterweight modifications. This deviation from the operating regulations allows the bridge owner to keep the Pelham Bay Railroad Bridge in the closed position from 7 a.m., on August 25, 1999, to 5 p.m., on August 27, 1999, and from 7 a.m., on September 1, 1999, to 5 p.m., on September 3, 1999. Vessels that can pass under the bridge without an opening may do so at all times during the closed period.

The bridge owner did not provide the required thirty-day notice to the Coast Guard for approval of scheduled maintenance repair which would require a drawbridge to deviate from the normal operating regulations. The Coast Guard has approved AMTRAK's request to close the bridge, however, because the work was determined to be necessary for public safety and the continued operation of the bridge.

In accordance with 33 CFR 117.35(c), this work will be performed with all due speed in order to return the bridge to normal operation as soon as possible. This deviation from the operating regulations is authorized under 33 CFR 117.35.

Dated: August 23, 1999.

**R. M. Larrabee,**

*Rear Admiral, U.S. Coast Guard, Commander, First Coast Guard District.*

[FR Doc. 99–22656 Filed 8–30–99; 8:45 am]

BILLING CODE 4910–15–M

## ENVIRONMENTAL PROTECTION AGENCY

## 40 CFR Part 52

**[CA 217–0170a; FRL–6423–1]**

## Approval and Promulgation of Implementation Plans; California State Implementation Plan Revision, South Coast Air Quality Management District

**AGENCY:** Environmental Protection Agency (EPA).

**ACTION:** Direct final rule.

**SUMMARY:** EPA is taking direct final action on a revision to the California State Implementation Plan. The revision concerns a rule from the South Coast Air Quality Management District (SCAQMD). This approval action will incorporate this rule into the federally approved SIP. The intended effect of approving this rule is to regulate emissions of volatile organic compounds (VOCs) in accordance with the requirements of the Clean Air Act, as amended in 1990 (CAA or the Act). The revised rule controls VOC emissions from commercial and industrial adhesive applications. EPA is finalizing the approval of this revision into the California SIP under provisions of the CAA regarding EPA action on SIP submittals, SIPs for national primary and secondary ambient air quality standards and plan requirements for nonattainment areas.

**DATES:** This rule is effective on November 1, 1999 without further notice, unless EPA receives adverse comments by September 30, 1999. If EPA receives such comment, it will publish a timely withdrawal **Federal Register** informing the public that this rule will not take effect.

**ADDRESSES:** Written comments must be submitted to Andrew Steckel at the Region IX office listed below. Copies of the rule revisions and EPA's evaluation report for the rule are available for public inspection at EPA's Region IX office during normal business hours. Copies of the submitted rule revisions are available for inspection at the following locations:

Rulemaking Office [AIR–4], Air Division, U.S. Environmental Protection Agency, Region IX, 75 Hawthorne Street, San Francisco, CA 94105.

Environmental Protection Agency, Air Docket (6102), 401 ''M'' Street, S.W., Washington, D.C. 20460.

California Air Resources Board, Stationary Source Division, Rule Evaluation Section, 2020 ''L'' Street, Sacramento, CA 95812.

South Coast Air Quality Management District, 21865 E. Copley Drive, Diamond Bar, CA 91765.

**FOR FURTHER INFORMATION CONTACT:** Yvonne Fong, Rulemaking Office [AIR–4], Air Division, U.S. Environmental Protection Agency, Region IX, 75 Hawthorne Street, San Francisco, CA 94105, Telephone: (415) 744–1199.

**SUPPLEMENTARY INFORMATION:**

### I. Applicability

The rule being approved into the California SIP is SCAQMD Rule 1168, Adhesive Application. This rule was submitted by the California Air Resources Board to EPA on September 29, 1998.

### II. Background

On March 3, 1978, EPA promulgated a list of ozone nonattainment areas under the provisions of the Clean Air Act, as amended in l977 (1977 Act or pre-amended Act), that included the Los Angeles-South Coast Air Basin Area. 43 FR 8964, 40 CFR 81.305. On May 26, 1988, EPA notified the Governor of California, pursuant to section 110(a)(2)(H) of the 1977 Act, that the above district's portion of the California SIP was inadequate to attain and maintain the ozone standard and requested that deficiencies in the existing SIP be corrected (EPA's SIP–Call). On November 15, 1990, the Clean Air Act Amendments of 1990 were enacted. Public Law 101–549, 104 Stat. 2399, codified at 42 U.S.C. 7401–7671q. In amended section 182(a)(2)(A) of the CAA, Congress statutorily adopted the requirement that nonattainment areas fix their deficient reasonably available control technology (RACT) rules for ozone and established a deadline of May 15, 1991 for states to submit corrections of those deficiencies.

Section 182(a)(2)(A) applies to areas designated as nonattainment prior to enactment of the amendments and classified as marginal or above as of the date of enactment. It requires such areas to adopt and correct RACT rules pursuant to pre-amended section 172 (b) as interpreted in pre-amendment guidance.[1] EPA's SIP–Call used that guidance to indicate the necessary corrections for specific nonattainment areas. The Los Angeles-South Coast Air Basin Area is classified as extreme[2]; therefore, this area was subject to the RACT fix-up requirement and the May 15, 1991 deadline.

The State of California submitted many revised RACT rules for incorporation into its SIP on September 29, 1998, including the rule being acted on in this document. This document addresses EPA's direct-final action for SCAQMD Rule 1168, Adhesive Applications. SCAQMD adopted Rule 1168 on February 13, 1998. EPA found the submitted rule complete on January 26, 1999 pursuant to criteria set forth in 40 CFR part 51, appendix V[3] and is finalizing the rule for approval into the SIP.

SCAQMD Rule 1168 limits the VOC emissions resulting from commercial and industrial adhesive applications. VOCs contribute to the production of ground level ozone and smog. This rule was originally adopted as part of SCAQMD's effort to achieve the National Ambient Air Quality Standard (NAAQS) for ozone and in response to EPA's SIP–Call and the section 182(a)(2)(A) CAA requirement. The following is EPA's evaluation and final action for this rule.

### III. EPA Evaluation and Action

To determine the approvability of a VOC rule, EPA must evaluate the rule for consistency with the requirements of the CAA and EPA regulations, as found in section 110 and part D of the CAA and 40 CFR part 51 (Requirements for Preparation, Adoption, and Submittal of Implementation Plans). The EPA interpretation of these requirements, which forms the basis for today's action, appears in the various EPA policy guidance documents listed in footnote 1. Among those provisions is the requirement that a VOC rule must, at a minimum, provide for the implementation of RACT for stationary sources of VOC emissions. This requirement was carried forth from the pre-amended Act.

---

[1] Among other things, the pre-amendment guidance consists of those portions of the proposed Post-1987 ozone and carbon monoxide policy that concern RACT, 52 FR 45044 (November 24, 1987); ''Issues Relating to VOC Regulation Cutpoints, Deficiencies, and Deviations, Clarification to Appendix D of November 24, 1987 **Federal Register** document'' (Blue Book) (notice of availability was published in the **Federal Register** on May 25, 1988); and the existing control technique guidelines (CTGs).

[2] The Los Angeles-South Coast Air Basin Area retained its designation of nonattainment and was classified by operation of law pursuant to sections 107(d) and 181(a) upon the date of enactment of the CAA. See 56 FR 56694 (November 6, 1991).

[3] EPA adopted the completeness criteria on February 16, 1990 (55 FR 5830) and, pursuant to section 110(k)(1)(A) of the CAA, revised the criteria on August 26, 1991 (56 FR 42216).

In addition, this rule was evaluated against the SIP enforceability guidelines found in the EPA Region IX—California Air Resources Board document entitled, ''Guidance Document for Correcting VOC Rule Deficiencies'' (April 1991) and against other EPA policies. In general, these guidance documents have been set forth to ensure that VOC rules are fully enforceable and strengthen or maintain the SIP.

There is currently no version of SCAQMD 1168, Adhesive Applications in the SIP. The submitted rule includes provisions which:

- clearly delineate rule applicability (sections a, i, and j),
- limit the VOC content of adhesives, sealants, and primers (sections c1–3),
- specify application techniques and good housekeeping practices (sections c4–6),
- require persons opting to use control equipment to use equipment with a combined control and capture efficiency of at least 80 percent (section c7),
- specify that the lowest VOC standard shall apply for any adhesive product making multiple application claims (section c9),
- require records be maintained in accordance with Rule 109 (section e),
- reference test methods for determining VOC content and capture and control efficiency (sections f and g), and
- prohibit specification of the use of non-complying adhesive products within the District (section h).

Earlier versions of this rule were adopted on December 4, 1992 and December 10, 1993, and submitted to EPA. While EPA can only act on the most recently submitted version, EPA reviewed relevant materials associated with the superseded versions.

EPA has evaluated the submitted rule and has determined that it is consistent with the CAA, EPA regulations, and EPA policy. Therefore, SCAQMD Rule 1168, Adhesive Applications is being approved under section 110(k)(3) of the CAA as meeting the requirements of section 110(a) and part D.

EPA is publishing this rule without prior proposal because the Agency views this as a noncontroversial amendment and anticipates no adverse comments. However, in the proposed rules section of this **Federal Register** publication, EPA is publishing a separate document that will serve as the proposal to approve the SIP revision should adverse comments be filed. This rule will be effective November 1, 1999 without further notice unless the Agency receives adverse comments by September 30, 1999.

If the EPA receives such comments, then EPA will publish a timely withdrawal in the **Federal Register** informing the public that the rule will not take effect. All public comments received will then be addressed in a subsequent final rule based on the proposed rule. The EPA will not institute a second comment period. Any parties interested in commenting on this rule should do so at this time. If no such comments are received, the public is advised that this rule is effective on November 1, 1999 and no further action will be taken on the proposed rule.

## IV. Administrative Requirements

### *A. Executive Order 12866*

The Office of Management and Budget (OMB) has exempted this regulatory action from Executive Order (E.O.) 12866, Regulatory Planning and Review.

### *B. Executive Order 12875*

Under Executive Order 12875, Enhancing the Intergovernmental Partnership, EPA may not issue a regulation that is not required by statute and that creates a mandate upon a State, local or tribal government, unless the Federal government provides the funds necessary to pay the direct compliance costs incurred by those governments, or EPA consults with those governments. If EPA complies by consulting, Executive Order 12875 requires EPA to provide to the Office of Management and Budget a description of the extent of EPA's prior consultation with representatives of affected State, local and tribal governments, the nature of their concerns, copies of any written communications from the governments, and a statement supporting the need to issue the regulation. In addition, Executive Order 12875 requires EPA to develop an effective process permitting elected officials and other representatives of State, local and tribal governments ''to provide meaningful and timely input in the development of regulatory proposals containing significant unfunded mandates.'' Today's rule does not create a mandate on State, local or tribal governments. The rule does not impose any enforceable duties on these entities. Accordingly, the requirements of section 1(a) of E.O. 12875 do not apply to this rule.

### *C. Executive Order 13045*

Protection of Children from Environmental Health Risks and Safety Risks (62 FR 19885, April 23, 1997), applies to any rule that: (1) Is determined to be ''economically significant'' as defined under E.O. 12866, and (2) concerns an environmental health or safety risk that EPA has reason to believe may have a disproportionate effect on children. If the regulatory action meets both criteria, the Agency must evaluate the environmental health or safety effects of the planned rule on children, and explain why the planned regulation is preferable to other potentially effective and reasonably feasible alternatives considered by the Agency. This rule is not subject to E.O. 13045 because it is does not involve decisions intended to mitigate environmental health or safety risks.

### *D. Executive Order 13084*

Under Executive Order 13084, Consultation and Coordination with Indian Tribal Governments, EPA may not issue a regulation that is not required by statute, that significantly or uniquely affects the communities of Indian tribal governments, and that imposes substantial direct compliance costs on those communities, unless the Federal government provides the funds necessary to pay the direct compliance costs incurred by the tribal governments, or EPA consults with those governments. If EPA complies by consulting, Executive Order 13084 requires EPA to provide to the Office of Management and Budget, in a separately identified section of the preamble to the rule, a description of the extent of EPA's prior consultation with representatives of affected tribal governments, a summary of the nature of their concerns, and a statement supporting the need to issue the regulation. In addition, Executive Order 13084 requires EPA to develop an effective process permitting elected officials and other representatives of Indian tribal governments ''to provide meaningful and timely input in the development of regulatory policies on matters that significantly or uniquely affect their communities.'' Today's rule does not significantly or uniquely affect the communities of Indian tribal governments. Accordingly, the requirements of section 3(b) of E.O. 13084 do not apply to this rule.

### *E. Regulatory Flexibility Act*

The Regulatory Flexibility Act (RFA) generally requires an agency to conduct a regulatory flexibility analysis of any rule subject to notice and comment rulemaking requirements unless the agency certifies that the rule will not have a significant economic impact on a substantial number of small entities. Small entities include small businesses, small not-for-profit enterprises, and small governmental jurisdictions. This

final rule will not have a significant impact on a substantial number of small entities because SIP approvals under section 110 and subchapter I, part D of the Clean Air Act do not create any new requirements but simply approve requirements that the State is already imposing. Therefore, because the Federal SIP approval does not create any new requirements, I certify that this action will not have a significant economic impact on a substantial number of small entities. Moreover, due to the nature of the Federal-State relationship under the Clean Air Act, preparation of flexibility analysis would constitute Federal inquiry into the economic reasonableness of state action. The Clean Air Act forbids EPA to base its actions concerning SIPs on such grounds. *Union Electric Co.,* v. *U.S. EPA,* 427 U.S. 246, 255–66 (1976); 42 U.S.C. 7410(a)(2).

*F. Unfunded Mandates*

Under section 202 of the Unfunded Mandates Reform Act of 1995 (''Unfunded Mandates Act''), signed into law on March 22, 1995, EPA must prepare a budgetary impact statement to accompany any proposed or final rule that includes a Federal mandate that may result in estimated annual costs to State, local, or tribal governments in the aggregate; or to private sector, of $100 million or more. Under section 205, EPA must select the most cost-effective and least burdensome alternative that achieves the objectives of the rule and is consistent with statutory requirements. Section 203 requires EPA to establish a plan for informing and advising any small governments that may be significantly or uniquely impacted by the rule.

EPA has determined that the approval action promulgated does not include a Federal mandate that may result in estimated annual costs of $100 million or more to either State, local, or tribal governments in the aggregate, or to the private sector. This Federal action approves pre-existing requirements under State or local law, and imposes no new requirements. Accordingly, no additional costs to State, local, or tribal governments, or to the private sector, result from this action.

*G. Submission to Congress and the Comptroller General*

The Congressional Review Act, 5 U.S.C. 801 *et seq.,* as added by the Small Business Regulatory Enforcement Fairness Act of 1996, generally provides that before a rule may take effect, the agency promulgating the rule must submit a rule report, which includes a copy of the rule, to each House of the Congress and to the Comptroller General of the United States. EPA will submit a report containing this rule and other required information to the U.S. Senate, the U.S. House of Representatives, and the Comptroller General of the United States prior to publication of the rule in the **Federal Register**. This rule is not a ''major'' rule as defined by 5 U.S.C. 804(2).

*H. Petitions for Judicial Review*

Under section 307(b)(1) of the Clean Air Act, petitions for judicial review of this action must be filed in the United States Court of Appeals for the appropriate circuit by November 1, 1999. Filing a petition for reconsideration by the Administrator of this final rule does not affect the finality of this rule for the purposes of judicial review nor does it extend the time within which a petition for judicial review may be filed, and shall not postpone the effectiveness of such rule or action. This action may not be challenged later in proceedings to enforce its requirements. (See section 307(b)(2).)

**List of Subjects in 40 CFR Part 52**

Environmental protection, Air pollution control, Hydrocarbons, Incorporation by reference, Intergovernmental relations, Ozone, Reporting and recordkeeping requirements, Volatile organic compounds.

Dated: August 6, 1999.

**Felicia Marcus,**

*Regional Administrator, Region IX.*

Part 52, Chapter I, Title 40 of the Code of Federal Regulations is amended as follows:

## PART 52—[AMENDED]

1. The authority citation for Part 52 continues to read as follows:

**Authority:** 42 U.S.C. 7401 *et seq.*

## Subpart F—California

2. Section 52.220 is amended by adding paragraphs (c)(266) to read as follows:

**§ 52.220 Identification of plan.**

* * * * *

(c) * * *

(266) New and amended regulations for the following APCDs were submitted on September 29, 1998 by the Governor's designee.

(i) Incorporation by reference.

(A) South Coast Air Quality Management District.

(*1*) Rule 1168, adopted on April 7, 1989, and amended February 13, 1998.

* * * * *

[FR Doc. 99–22179 Filed 8–30–99; 8:45 am]

BILLING CODE 6560–50–P

---

## ENVIRONMENTAL PROTECTION AGENCY

## 40 CFR Part 52

**[CA 224–0166a; FRL–6425–5]**

## Approval and Promulgation of Implementation Plans; California State Implementation Plan Revision, South Coast Air Quality Management District, Ventura County Air Pollution Control District

**AGENCY:** Environmental Protection Agency (EPA).

**ACTION:** Direct final rule.

**SUMMARY:** EPA is taking direct final action on revisions to the California State Implementation Plan. The revisions concern rules from the following special districts: South Coast Air Quality Management District (SCAQMD); and, Ventura County Air Pollution Control District (VCAPCD). This approval action will incorporate these rules into the federally approved SIP. The intended effect of approving these rules is to regulate emissions of volatile organic compounds (VOCs) according to the requirements of the Clean Air Act, as amended in 1990 (CAA or the Act). The revised rules control VOC emissions from pleasure craft coating operations. Thus, EPA is finalizing the approval of these revisions into the California SIP under provisions of the CAA regarding EPA action on SIP submittals, SIPs for national primary and secondary ambient air quality standards and plan requirements for nonattainment areas.

**DATES:** This rule is effective on November 1, 1999 without further notice, unless EPA receives adverse comments by September 30, 1999. If EPA receives such comment, it will publish a timely withdrawal in the **Federal Register** informing the public that this rule will not take effect.

**ADDRESSES:** Written comments must be submitted to Andrew Steckel at the Region IX office listed below. Copies of the rule revisions and EPA's evaluation report for each rule are available for public inspection at EPA's Region IX office during normal business hours. Copies of the submitted rule revisions are available for inspection at the following locations:

Rulemaking Office (AIR–4), Air Division, U.S. Environmental Protection Agency, Region IX, 75 Hawthorne Street, San Francisco, CA 94105;
Environmental Protection Agency, Air Docket (6102), 401 ''M'' Street, SW, Washington, DC 20460;
California Air Resources Board, Stationary Source Division, Rule Evaluation Section, 2020 ''L'' Street, Sacramento, CA 95812;
South Coast Air Quality Management District, 21865 East Copley Drive, Diamond Bar, CA 91765–4182; and,
Ventura County Air Pollution Control District, 669 County Square Drive, Ventura, CA 93003

**FOR FURTHER INFORMATION CONTACT:**

Jerald S. Wamsley, Rulemaking Office, AIR–4, Air Division, U.S. Environmental Protection Agency, Region IX, 75 Hawthorne Street, San Francisco, CA 94105, Telephone: (415) 744–1226.

**SUPPLEMENTARY INFORMATION:**

## I. Applicability

The rules being approved into the California SIP are SCAQMD Rule 1106.1—Pleasure Craft Coating Operations and VCAPCD Rule 74.24.1—Pleasure Craft Coating and Commercial Boatyard Operations. These rules were submitted by the California Air Resources Board (CARB) to EPA on June 3, 1999 and February 16, 1999, respectively.

## II. Background

On March 3, 1978, EPA promulgated a list of ozone nonattainment areas under the provisions of the Clean Air Act, as amended in l977 (1977 Act or pre-amended Act), that included the South Coast air basin and Ventura County. See 43 FR 8964, 40 CFR 81.305. On May 26, 1988, EPA notified the Governor of California, pursuant to section 110(a)(2)(H) of the 1977 Act, that the above districts' portions of the California SIP were inadequate to attain and maintain the ozone standard and requested that deficiencies in the existing SIP be corrected (EPA's SIP-Call). On November 15, 1990, the Clean Air Act Amendments of 1990 were enacted. Public Law 101–549, 104 Stat. 2399, codified at 42 U.S.C. 7401–7671q. In amended section 182(a)(2)(A) of the CAA, Congress statutorily adopted the requirement that nonattainment areas fix their deficient reasonably available control technology (RACT) rules for ozone and established a deadline of May 15, 1991 for states to submit corrections of those deficiencies.

Section 182(a)(2)(A) applies to areas designated as nonattainment prior to enactment of the amendments and classified as marginal or above as of the date of enactment. It requires such areas to adopt and correct RACT rules pursuant to pre-amended section 172 (b) as interpreted in pre-amendment guidance.[1] EPA's SIP-Call used that guidance to indicate the necessary corrections for specific nonattainment areas. The South Coast air basin is classified as extreme and Ventura County is classified as severe.[2] Therefore, these areas were subject to the RACT fix-up requirement and the May 15, 1991 deadline.

The State of California submitted many revised RACT rules for incorporation into its SIP on both June 3, 1999 and February 16, 1999, including the rules being acted on in this document. This document addresses EPA's direct-final action for SCAQMD Rule 1106.1—Pleasure Craft Coating Operations and VCAPCD Rule 74.24.1—Pleasure Craft Coating and Commercial Boatyard Operations. SCAQMD adopted Rule 1106.1 on February 12, 1999. VCAPCD adopted Rule 74.24.1 on November 19, 1998. EPA found both of these submitted rules to be complete on June 24, 1999 and April 23, 1999, respectively; pursuant to EPA's completeness criteria that are set forth in 40 CFR part 51, appendix V.[3] SCAQMD Rule 1106.1 and VCAPCD Rule 74.24.1 are being finalized for approval into the SIP with today's action.

SCAQMD Rule 1106.1 and VCAPCD Rule 74.24.1 are designed to reduce volatile organic compound (VOC) emissions at industrial sites engaged in manufacturing or repairing vessels which are operated, leased, rented, or chartered to a person or business for recreational purposes. VOCs contribute to the production of ground level ozone and smog. These rules were adopted as part of SCAQMD and VCAPCD efforts to achieve the National Ambient Air Quality Standard (NAAQS) for ozone and in response to EPA's SIP-Call and the section 182(a)(2)(A) CAA requirement. The following is EPA's evaluation and final action for this rule.

## III. EPA Evaluation and Action

In determining the approvability of a VOC rule, EPA must evaluate the rule for consistency with the requirements of the CAA and EPA regulations, as found in section 110 and part D of the CAA and 40 CFR part 51 (Requirements for Preparation, Adoption, and Submittal of Implementation Plans). The EPA interpretation of these requirements, which forms the basis for today's action, appears in the various EPA policy guidance documents listed in footnote one. Among those provisions is the requirement that a VOC rule must, at a minimum, provide for the implementation of RACT for stationary sources of VOC emissions. This requirement was carried forth from the pre-amended Act.

For the purpose of assisting state and local agencies in developing RACT rules, EPA prepared a series of Control Technique Guideline (CTG) documents. The CTGs are based on the underlying requirements of the Act and specify the presumptive norms for what is RACT for specific source categories. Under the CAA, Congress ratified EPA's use of these documents, as well as other Agency policy, for requiring States to ''fix-up'' their RACT rules. See section 182(a)(2)(A). Further interpretations of EPA policy are found in the Blue Book, referred to in footnote one. In general, these guidance documents have been set forth to ensure that VOC rules are fully enforceable and strengthen or maintain the SIP.

However, there is no CTG applicable to the pleasure craft coating operations source category. Along with SCAQMD Rule 1106.1 and VCAPCD 74.24.1, one other pleasure craft coating rule, San Diego County Air Pollution Control District Rule 67.18, has been adopted within California. Together, these three rules provide a basis for determining what controls are reasonably available within California. This rulemaking will not establish EPA's national definition of RACT for the pleasure craft coating industry across the United States.

On April 13, 1995, EPA approved into the SIP a version of SCAQMD Rule 1106.1—Pleasure Craft Coating Operations that had been adopted on May 1, 1992. (See 60 FR 18750.) Revisions to this Rule 1106.1 were adopted subsequently on March 8, 1996 and June 13, 1997, and submitted to EPA. While EPA can only act on this most recently submitted version, EPA reviewed relevant materials associated

[1] Among other things, the pre-amendment guidance consists of those portions of the proposed Post-1987 ozone and carbon monoxide policy that concern RACT, 52 FR 45044 (November 24, 1987); ''Issues Relating to VOC Regulation Cutpoints, Deficiencies, and Deviations, Clarification to Appendix D of November 24, 1987 **Federal Register** Notice'' (Blue Book) (notice of availability was published in the **Federal Register** on May 25, 1988); and the existing control technique guidelines (CTGs).

[2] Both the South Coast air basin and Ventura County retained their designation of nonattainment and were classified by operation of law pursuant to sections 107(d) and 181(a) upon the date of enactment of the CAA. See 56 FR 56694 (November 6, 1991).

[3] EPA adopted the completeness criteria on February 16, 1990 (55 FR 5830) and, pursuant to section 110(k)(1)(A) of the CAA, revised the criteria on August 26, 1991 (56 FR 42216).

with these prior and superseded versions of the rule. SCAQMD's submitted Rule 1106.1 includes the following significant changes from the current SIP:

—Increase temporarily the VOC emission limits for Extreme High Gloss Topcoats from 490 gr/l to 650 gr/l and Finish Primers from 420 gr/l to 600 gr/l returning these emission limits to the previously lower limits on January 1, 2001;
—Increase the VOC emissions limit for Antifoulants from 150 gr/l to 400 gr/l and lowering the emissions limit to 300 gr/l on January 1, 2001;
—Remove the requirement that sprayed coatings be applied using high volume low pressure (HVLP) or equivalent methods; and,
—Provide related editorial amendments such as removing irrelevant past compliance dates and emission limits and renumbering test method designations.

The modified VOC content limits and compliance dates in the submitted Rule 1106.1 neither interfere with reasonable further progress, nor attainment of the NAAQS. Considering progress requirements, enough surplus emission reductions exist between 1999 and 2005 in the EPA approved ozone attainment plan to allow a delay in emission reductions from Rule 1106.1 while still meeting the CAA's progress requirements. (See 62 FR 1181, January 8, 1997.) Regarding attainment of the NAAQS in 2010, the relaxed emission limits in the submitted rule add less than 0.0063% (40.5 pounds per day) to the EPA approved 2010 VOC emissions budget of 323 tons per day. For these reasons, the changes within submitted Rule 1106.1 are consistent with the requirements of section 110(l) of the CAA.

EPA has evaluated submitted Rule 1106.1 and determined that it is consistent with the CAA, EPA regulations, and EPA policy. Therefore, SCAQMD Rule 1106.1—Pleasure Craft Coating Operations is being approved under section 110(k)(3) of the CAA as meeting the requirements of section 110(a) and part D. Although the VOC emissions increases due to Rule 1106.1 can be considered a de minimus amount by themselves, SCAQMD should account for the cumulative effect of such emission increases in future attainment plan revisions.

There is no version of VCAPCD Rule 74.24.1—Pleasure Craft Coating and Commercial Boatyard Operations in the SIP. The submitted rule includes the following general provisions:

—Applicability;
—Requirements for ROC (reactive organic compounds) content of coatings, surface preparation, and storage of ROC containing materials;
—Exemptions from the rule;
—Record keeping to demonstrate compliance with the rule;
—Test methods for determining compliance with the rule;
—Violations; and
—Definitions of terms used within the rule

EPA has evaluated the submitted rule and has determined that it is consistent with the CAA, EPA regulations, and EPA policy. Therefore, VCAPCD Rule 74.24.1—Pleasure Craft Coating and Boatyard Operations is being approved under section 110(k)(3) of the CAA as meeting the requirements of section 110(a) and part D.

EPA is publishing this rulemaking action without prior proposal because the Agency views this as a noncontroversial amendment and anticipates no adverse comments. However, in the proposed rules section of this **Federal Register** publication, EPA is publishing a separate document that will serve as the proposal to approve the SIP revision should adverse comments be filed. This rule will be effective November 1, 1999 without further notice unless the Agency receives adverse comments by September 30, 1999.

If the EPA receives such comments, then EPA will publish a timely withdrawal in the **Federal Register** informing the public that the rule did not take effect. All public comments received will then be addressed in a subsequent final rule based on the proposed rule. The EPA will not institute a second comment period. Any parties interested in commenting on this rule should do so at this time. If no such comments are received, the public is advised that this rule is effective on November 1, 1999, and no further action will be taken on the proposed rule.

## IV. Administrative Requirements

### *A. Executive Order 12866*

The Office of Management and Budget (OMB) has exempted this regulatory action from Executive Order (E.O.) 12866, Regulatory Planning and Review.

### *B. Executive Order 12875*

Under Executive Order 12875, Enhancing the Intergovernmental Partnership, EPA may not issue a regulation that is not required by statute and that creates a mandate upon a State, local or tribal government, unless the Federal government provides the funds necessary to pay the direct compliance costs incurred by those governments, or EPA consults with those governments. If EPA complies by consulting, Executive Order 12875 requires EPA to provide to the Office of Management and Budget a description of the extent of EPA's prior consultation with representatives of affected State, local and tribal governments, the nature of their concerns, copies of any written communications from the governments, and a statement supporting the need to issue the regulation. In addition, Executive Order 12875 requires EPA to develop an effective process permitting elected officials and other representatives of State, local and tribal governments ''to provide meaningful and timely input in the development of regulatory proposals containing significant unfunded mandates.'' Today's rule does not create a mandate on State, local or tribal governments. The rule does not impose any enforceable duties on these entities. Accordingly, the requirements of section 1(a) of E.O. 12875 do not apply to this rule.

### *C. Executive Order 13045*

Protection of Children from Environmental Health Risks and Safety Risks (62 FR 19885, April 23, 1997), applies to any rule that: (1) Is determined to be ''economically significant'' as defined under E.O. 12866, and (2) concerns an environmental health or safety risk that EPA has reason to believe may have a disproportionate effect on children. If the regulatory action meets both criteria, the Agency must evaluate the environmental health or safety effects of the planned rule on children, and explain why the planned regulation is preferable to other potentially effective and reasonably feasible alternatives considered by the Agency. This rule is not subject to E.O. 13045 because it is does not involve decisions intended to mitigate environmental health or safety risks.

### *D. Executive Order 13084*

Under Executive Order 13084, Consultation and Coordination with Indian Tribal Governments, EPA may not issue a regulation that is not required by statute, that significantly or uniquely affects the communities of Indian tribal governments, and that imposes substantial direct compliance costs on those communities, unless the Federal government provides the funds necessary to pay the direct compliance costs incurred by the tribal governments, or EPA consults with those governments. If EPA complies by consulting, Executive Order 13084

requires EPA to provide to the Office of Management and Budget, in a separately identified section of the preamble to the rule, a description of the extent of EPA's prior consultation with representatives of affected tribal governments, a summary of the nature of their concerns, and a statement supporting the need to issue the regulation. In addition, Executive Order 13084 requires EPA to develop an effective process permitting elected officials and other representatives of Indian tribal governments ''to provide meaningful and timely input in the development of regulatory policies on matters that significantly or uniquely affect their communities.'' Today's rule does not significantly or uniquely affect the communities of Indian tribal governments. Accordingly, the requirements of section 3(b) of E.O. 13084 do not apply to this rule.

*E. Regulatory Flexibility Act*

The Regulatory Flexibility Act (RFA) generally requires an agency to conduct a regulatory flexibility analysis of any rule subject to notice and comment rulemaking requirements unless the agency certifies that the rule will not have a significant economic impact on a substantial number of small entities. Small entities include small businesses, small not-for-profit enterprises, and small governmental jurisdictions. This final rule will not have a significant impact on a substantial number of small entities because SIP approvals under section 110 and subchapter I, part D of the Clean Air Act do not create any new requirements but simply approve requirements that the State is already imposing. Therefore, because the Federal SIP approval does not create any new requirements, I certify that this action will not have a significant economic impact on a substantial number of small entities. Moreover, due to the nature of the Federal-State relationship under the Clean Air Act, preparation of flexibility analysis would constitute Federal inquiry into the economic reasonableness of state action. The Clean Air Act forbids EPA to base its actions concerning SIPs on such grounds. *Union Electric Co.,* v. *U.S. EPA*, 427 U.S. 246, 255–66 (1976); 42 U.S.C. 7410(a)(2).

*F. Unfunded Mandates*

Under section 202 of the Unfunded Mandates Reform Act of 1995 (''Unfunded Mandates Act''), signed into law on March 22, 1995, EPA must prepare a budgetary impact statement to accompany any proposed or final rule that includes a Federal mandate that may result in estimated annual costs to State, local, or tribal governments in the aggregate; or to private sector, of $100 million or more. Under section 205, EPA must select the most cost-effective and least burdensome alternative that achieves the objectives of the rule and is consistent with statutory requirements. Section 203 requires EPA to establish a plan for informing and advising any small governments that may be significantly or uniquely impacted by the rule.

EPA has determined that the approval action promulgated does not include a Federal mandate that may result in estimated annual costs of $100 million or more to either State, local, or tribal governments in the aggregate, or to the private sector. This Federal action approves pre-existing requirements under State or local law, and imposes no new requirements. Accordingly, no additional costs to State, local, or tribal governments, or to the private sector, result from this action.

*G. Submission to Congress and the Comptroller General*

The Congressional Review Act, 5 U.S.C. 801 *et seq.*, as added by the Small Business Regulatory Enforcement Fairness Act of 1996, generally provides that before a rule may take effect, the agency promulgating the rule must submit a rule report, which includes a copy of the rule, to each House of the Congress and to the Comptroller General of the United States. EPA will submit a report containing this rule and other required information to the U.S. Senate, the U.S. House of Representatives, and the Comptroller General of the United States prior to publication of the rule in the **Federal Register**. This rule is not a ''major'' rule as defined by 5 U.S.C. 804(2).

*H. Petitions for Judicial Review*

Under section 307(b)(1) of the Clean Air Act, petitions for judicial review of this action must be filed in the United States Court of Appeals for the appropriate circuit by November 1, 1999. Filing a petition for reconsideration by the Administrator of this final rule does not affect the finality of this rule for the purposes of judicial review nor does it extend the time within which a petition for judicial review may be filed, and shall not postpone the effectiveness of such rule or action. This action may not be challenged later in proceedings to enforce its requirements. (See section 307(b)(2).)

**List of Subjects in 40 CFR Part 52**

Environmental protection, Air pollution control, Hydrocarbons, Incorporation by reference, Intergovernmental relations, Ozone, Reporting and recordkeeping requirements, Volatile organic compounds.

Dated: August 6, 1999.

**Laura Yoshii,**

*Acting Regional Administrator, Region IX.*

Part 52, Chapter I, Title 40 of the Code of Federal Regulations is amended as follows:

## PART 52—[AMENDED]

1. The authority citation for Part 52 continues to read as follows:

**Authority:** 42 U.S.C. 7401 *et seq.*

## Subpart F—California

2. Section 52.220 is amended by adding paragraphs (c)(262)(i)(B)(*2*) and (c)(264)(i)(A)(*2*) to read as follows:

**§ 52.220 Identification of plan.**

* * * * *

(c) * * *

(262) * * *

(i) * * *

(B) * * *

(*2*) Rule 74.24.1, adopted on November 10, 1998.

* * * * *

(264) * * *

(i) * * *

(A) * * *

(*2*) Rule 1106.1, adopted on May 1, 1992, and amended on February 12, 1999.

* * * * *

[FR Doc. 99–22183 Filed 8–30–99; 8:45 am]

BILLING CODE 6560–50–P

---

## ENVIRONMENTAL PROTECTION AGENCY

## 40 CFR Parts 52 and 60

**[ND–001–0006a; FRL–6426–5]**

## Clean Air Act Approval and Promulgation of Air Quality Implementation Plan Revision for North Dakota; Revisions to the Air Pollution Control Rules; Delegation of Authority for New Source Performance Standards

**AGENCY:** Environmental Protection Agency (EPA).

**ACTION:** Direct final rule and delegation of authority.

**SUMMARY:** EPA approves revisions to the State Implementation Plan (SIP) submitted by the Governor of North Dakota with a letter dated September 28, 1998. The revisions affect air pollution control rules regarding general

provisions, the State $SO_2$ ambient air quality standard, emissions of particulate matter and organic compounds, and permits to construct. EPA will handle separately the revisions to the Title V operating permit program, a direct delegation request for emission standards for hazardous air pollutants for source categories, and the State's plan for hospital, medical, and infectious waste incinerators.

Finally, EPA is providing notice that on May 7, 1999, North Dakota was delegated authority to implement and enforce the New Source Performance Standards (NSPS) in 40 CFR part 60, as of November 1, 1997, (excluding subpart Eb).

**DATES:** This direct final rule is effective on November 1, 1999 without further notice, unless EPA receives adverse comment by September 30, 1999. If adverse comment is received, EPA will publish a timely withdrawal of the direct final rule in the **Federal Register** informing the public that the rule will not take effect.

**ADDRESSES:** Mail written comments to Richard R. Long, Director, Air and Radiation Program, Mailcode 8P–AR, Environmental Protection Agency, Region VIII, 999 18th Street, suite 500, Denver, Colorado, 80202–2405. Documents relevant to this action can be perused during normal business hours at the Air and Radiation Program, Environmental Protection Agency, Region VIII, 999 18th Street, suite 500, Denver, Colorado, 80202–2405. Copies of the incorporation by reference material are available at the Air and Radiation Docket and Information Center, Environmental Protection Agency, 401 M Street, SW., Washington, DC 20460. Copies of the State documents relevant to this action are available at the North Dakota Department of Health, Division of Environmental Engineering, 1200 Missouri Avenue, Bismarck, North Dakota, 58504–5264.

**FOR FURTHER INFORMATION CONTACT:** Amy Platt, Environmental Protection Agency, Region VIII, (303) 312–6449.

**SUPPLEMENTARY INFORMATION:** Throughout this document wherever ''we,'' ''us,'' or ''our'' are used we mean EPA.

## I. Background

In response to a petition by the Lignite Energy Council, the North Dakota Legislature adopted Senate Bill No. 2356 in the spring of 1997. This bill created a new section in chapter 23–25 of the North Dakota Century Code which, among other things, prohibits the adoption of ambient air quality rules or standards for sulfur dioxide that affect coal conversion facilities or petroleum refineries that are more strict than federal rules or standards under the Clean Air Act. As a result, the North Dakota Department of Health revised Chapter 33–15–02, Ambient Air Quality Standards, of the North Dakota Administrative Code (N.D.A.C.), to, among other things, exempt coal conversion facilities and petroleum refineries from the North Dakota ambient air quality standards (AAQS) for sulfur dioxide ($SO_2$), which are more stringent than the National Ambient Air Quality Standards (NAAQS) for $SO_2$. The revision is considered a relaxation. Because of the change in State law, coal conversion facilities and petroleum refineries will no longer be limited by the North Dakota AAQS and will not be allowed to emit $SO_2$ up to the NAAQs, unless limited by Prevention of Significant Deterioration (PSD) increment. The September 28, 1998 SIP revision addresses, among other things, this rule revision.

## II. Analysis of State Submission

### *A. Procedural Background*

The Act requires States to follow certain procedures in developing implementation plans and plan revisions for submission to EPA. Sections 110(a)(2) and 110(1) of the Act provide that each implementation plan a State submits must be adopted after reasonable notice and public hearing.

We also must determine whether a submittal is complete and therefore warrants further review and action (see section 110(k)(1) of the Act and 57 FR 13565). EPA's completeness criteria for SIP submittals can be found in 40 CFR part 51 appendix V. EPA attempts to determine completeness within 60 days of receiving a submission. However, the law considers a submittal complete if we don't determine completeness within six months after we receive it.

To provide for public comment, the North Dakota Department of Health (NDDOH), after providing adequate notice, held a public hearing on May 7, 1998 to address the revisions to the SIP and Air Pollution Control Rules. Following the public hearing, public comment period, and legal review by the North Dakota Attorney General's Office, the North Dakota State Health Council adopted the rule revisions, which became effective on September 1, 1998.

The Governor of North Dakota submitted the SIP revisions to EPA with a letter dated September 28, 1998. We reviewed them to determine completeness under the completeness criteria in 40 CFR part 51, appendix V. We found the submittal complete and so notified the Governor in a letter dated December 3, 1998. That letter also described the next steps to be taken in our review.

### *B. September 28, 1998 Revisions*

As noted above, we will handle separately the revisions in the September 28, 1998 submittal regarding Chapter 33–15–14 (section specific to the Title V operating permit program), a direct delegation request for North Dakota Air Pollution Control Rules Chapter 33–15–22, regarding emission standards for hazardous air pollutants for source categories, as well as the State's plan for hospital, medical, and infectious waste incinerators. The submittal also included a direct delegation request for standards of performance for new stationary sources (see below). Finally, the submittal addressed revisions to general provisions, the State $SO_2$ ambient air quality standard, emissions of particulate matter and organic compounds, and the permit to construct program, which involve the following chapters of the N.D.A.C. to be addressed in this document: 33–15–01 General Provisions; 33–15–02 Ambient Air Quality Standards; 33–15–05 Emissions of Particulate Matter Restricted; 33–15–07 Control of Organic Compound Emissions; and 33–15–14 Designated Air Contaminant Source, Permit to Construct, Minor Source Permit to Operate, Title V Permit to Operate (subsection specific to permit to construct only).

1. Chapter 33–15–01, N.D.A.C., General Provisions

Definitions for ''coal conversion facility'' and ''petroleum refinery'' were added to this chapter. This chapter was also revised to update the definition of volatile organic compounds (''VOCs'') in 33–15–01–04.51 to match the Federal definition as published by EPA on April 9, 1998 (63 FR 17331). These revisions are consistent with Federal requirements, and therefore, approvable.

2. Chapter 33–15–02, N.D.A.C., Ambient Air Quality Standards

In section 33–15–02–07, Concentrations of Air Contaminants in the Ambient Air Restricted, two new subsections were added. The new subsection 3 allows coal conversion facilities and petroleum refineries to emit sulfur dioxide up to the National Ambient Air Quality Standards (NAAQS). This subsection also reiterates that affected facilities must still comply with the Prevention of

Significant Deterioration (PSD) increments. The new subsection 4 allows facilities that experience a malfunction, or that need to shut down air pollution control equipment for maintenance, to emit sulfur dioxide in quantities that may exceed the 1-hour and 24-hour State Ambient Air Quality Standards (AAQS), but not to exceed the NAAQS. These revisions are a relaxation of requirements for affected sources because the NAAQS are less stringent than the State standards.

In addition, Table 2 was added to this chapter. Table 2 lists the NAAQS for sulfur dioxide.

In a March 28, 1997 letter from Richard Long, EPA, to Dana Mount, North Dakota Department of Health (NDDOH), EPA requested more information from the State regarding the implementation of Senate Bill No. 2356, which had recently been adopted by the State legislature and signed by the Governor. This bill prohibits the NDDOH from adopting sulfur dioxide ambient air quality standards affecting coal conversion facilities or petroleum refineries that are more strict than federal standards. The bill also provides for retroactive application, thus affecting earlier permitting decisions by NDDOH. EPA requested information to support a demonstration that the NAAQS and PSD increments would be protected in light of this change in State standards. In a series of letters from the NDDOH dated April 10 and November 17, 1997, and March 23, June 10, and December 1, 1998, the State provided EPA with adequate technical support information to demonstrate that the NAAQS and PSD increments would be protected.

a. *State's Technical Support Information.* According to NDDOH, Senate Bill No. 2356 allows existing and new coal conversion facilities and petroleum refineries to emit sulfur dioxide in amounts that could raise ambient concentrations up to the NAAQS. The sources would, however, have to comply with all other applicable requirements of the State Implementation Plan (SIP), including PSD increment. Note that the new law only applies to nine existing facilities (seven power plants, one coal gasification plant, and one petroleum refinery). For facilities that indicate a desire to increase their allowable emission rates based on this legislation, the State intends to review associated PSD increment consumption and NAAQS impacts. The State does not believe any increase in emissions from these facilities will endanger the NAAQS because air quality in North Dakota is good based on moniotring conducted around the State, and ambient $SO_2$ levels are well below both the State AAQS and the NAAQS.

At EPA's request, the State outlined how it intended to implement the requirements of SB2356 in a November 17, 1997 letter from William Delmore, North Dakota Assistant Attorney General, to Terry Lukas, EPA. The State provided a list of existing sources which are subject to Senate Bill No. 2356, a proposed rule amendment, and SIP revision schedule. The State proposed to revised two chapters of its Air Pollution Control Rules to implement SB2356, namely Chapters 33–15–01, General Provisions, and 33–15–02, Ambient Air Quality Standard. In Chapter 33–15–01, the NDDOH proposed definitions for ''coal conversion facility'' and ''petroleum refinery.'' In Chapter 33–15–02, the NDDOH proposed to include the substantive requirements of SB2356. The State also declared its intent to enforce compliance with these revisions.

Upon review of Mr. Delmore's November 17, 1997 letter, EPA provided further guidance to the State regarding the necessary demonstration to show that the revisions would ensure protection of the NAAQS and PSD increments in light of the change in applicability of the State AAQS mandated by Senate Bill No. 2356. In a January 8, 1998 letter, EPA indicated that the requirement for making such a demonstration could not be fulfilled at the time of SIP revision because the effect of the relaxation on ambient air quality would depend on future permitting actions. Therefore, the demonstration would have to be built into the revised SIP so that EPA could consider approval of the revision.

EPA provided wording changes to the proposed regulatory language to ensure that emissions would not be permitted in any manner or amount that would cause or contribute to a violation of the NAAQS or PSD increments and to require a demonstration through modeling, with opportunity for EPA review, that a revised emission limit would not cause or contribute to a violation of the NAAQS, PSD increments, or any other requirement under the Federal Clean Air Act.

EPA also instructed the State to provide additional information as technical support documentation which would be necessary for EPA to consider approval of the final SIP revision, as follows:

—General modeling requirements that sources will have to meet if they seek to raise their emissions limits as a result of this change in applicability of the State AAQS. These general modeling requirements should follow the requirements contained in EPA's Guidedline on Air Quality Modeling (40 CFR part 51, appendix W) and should include consideration of cumulative impacts.

—An explanation of how the State intends to determine ''that any source * * * causes a verifiable ambient air quality standard violation which is attributable to the source * * * for compliance purposes, as indicated in Mr. Delmore's November 17, 1997 letter.

In a March 23, 1998 letter, the NDDOH provided its draft SIP revision to EPA for review and comment prior to public hearing. This draft SIP revision included, among other things, the proposed regulatory revisions for implementing SB2356.

With an April 29, 1998 comment letter for public hearing, EPA noted that, for the most part, our concerns about the proposed revisions as described in Mr. Delmore's November 17, 1997 letter had been addressed. The State addressed our suggested language changes by incorporating them into Chapter 33–15–02, Ambient Air Quality Standards, and Chapter 33–15–14, Designated Air Contaminant Sources, Permit to Construct, Minor Source Permit to Operate, Title V Permit to Operate (subsection related to alterations to a source under the permit to construct section—see II.B.5. below). The State believed it was reasonable to address our concerns through Chapter 33–15–14 (as well as Chapter 33–15–02) because any request for an increase in emissions will have to go through the State's permit process.

EPA also requested additional information related to how to model different source categories subject to different $SO_2$ standards (State AAQS vs. NAAQS) in the same airshed, *i.e.,* which standard would apply.

In a June 10, 1998 letter from Dana Mount, NDDOH, to Richard Long, EPA, the State responded to our public hearing comments and provided some of the technical support documentation necessary. The State indicated that all modeling would be conducted in accordance with the ''Guideline on Air Quality Models'' published by EPA. With respect to modeling different source categories subject to different $SO_2$ standards in the same airshed, the State addressed the following scenarios:

*Existing source subject to State standard and new source subject to the NAAOS*—A new source subject to the NAAQS will be permitted as long as modeling results indicate that the new source plus all existing sources do not cause or contribute to a violation of the NAAQS or PSD increments.

*Existing source subject to the NAAQS and a new source subject to the State standard*—The new source will be permitted as long as it does not cause or contribute to a violation of the State AAQS or PSD increments. If modeling for this source plus all existing sources predicts a violation of the State standard or PSD increments, the new facility will not be permitted if it significantly contributes to these violations. If the new source would not significantly contribute to these violations, then it will be permitted. (However, a SIP revision will be required to address the predicted increment violation. See 40 CFR 51.166(a)(3).)

*Existing source subject to the NAAQS seeking to increase its emission limit in an air shed with existing sources subject to the State standard*—The existing NAAQS source will be allowed to increase its emissions as long as the modeling (which includes all sources) does not predict a violation of the NAAQS or PSD increments.

As the State's final piece of technical support documentation, a December 1, 1998 letter from Dana Mount, NDDOH, to Richard Long, EPA, summarized the State's approach to enforcement of its revised $SO_2$ standard. In the event that data from the state-wide ambient air quality monitoring network indicates an exceedance of the $SO_2$ standard, that data will be used along with dispersion modeling to determine what source or sources contributed to the exceedance. Both ambient monitoring and dispersion modeling will be used as the primary tools to determine corrective actions or enforcement activity. Dispersion modeling also will be used in the case of suspected exceedances to determine the necessity of establishing monitoring sites at locations of prime impact.

b. *EPA's Rationale for Approving Change.* EPA believes that we can approve this change in applicability of more stringent State standards because the NAAQS, PSD increments, and other Clean Air Act programs appear to be protected, based on the information provided by the State in the letters discussed above and the State's incorporation of EPA's suggested regulatory language. The protective features of this SIP revision and the State's policy for implementing it are as follows:

i. Demonstration is built into the SIP revision through regulatory language to ensure that the NAAQS, PSD increments, and other Clean Air Act requirements are protected. (See Chapter 33–15–02–07. 3 and 4 and Chapter 33–15–14–02.3c)

ii. Sources that seek to raise their emissions limits as a result of this change in applicability of the State AAQS will have to meet modeling requirements that follow EPA's Guideline on Air Quality Modeling (40 CFR part 51, appendix W) and will have to include consideration of cumulative impacts.

iii. Both ambient monitoring and dispersion modeling will be used to determine corrective actions or enforcement activity in the event that monitoring data indicates an exceedance of the $SO_2$ standard. Dispersion modeling also will be used in the case of suspected exceedances to determine the need for new monitoring sites at locations or prime impact.

For a more detailed discussion of EPA's rationable for approving this revision, please refer to the Technical Support Document (TSD) accompanying this action.

3. Chapter 33–15–05, N.D.A.C., Emissions of Particulate Matter Restricted

The State deleted its requirements for new infectious waste incinerators since the units will be covered by the requirements in Chapter 33–15–12, Subpart Ec, Standards of performance for hospital/medical/infectious waste incinerators for which construction is commenced after June 20, 1996. This change was made to avoid duplication of Federal rules; however, the State considers it a relaxation of State rules.

The State has been delegated authority to implement and enforce the Federal New Source Performance Standard (NSPS) for hospital/medical/infectious waste incinerators (HMIWI) for which construction is commenced after June 20, 1996 (subpart Ec—see below), and also has received approval of its State Plan to implement the Emission Guidelines for existing HMIWI (see 64 FR 25831, May 13, 1999). Given that the State is implementing that NSPS and State Plan, any change in particulate matter emissions requirements for affected sources in North Dakota is of a de minimus nature. Thus, EPA believes the overall impact of this revision, if any, is minor, and therefore, approvable.

4. Chapter 33–15–07, N.D.A.C., Control of Organic Compounds Emissions

This revision is an administrative correction to the ''Scope'' section to correct the reference to Chapter 1 of the rules. It is minor in nature and approvable.

5. Chapter 33–15–14, N.D.A.C., Designated Air Contaminant Sources, Permit To Construct, Minor Source Permit To Operate, Title V Permit To Operate (Revisions Specific to Permit To Construct Section)

Subsection 33–15–14–02.3.c, regarding alterations to a source under the permit to construct section, was added to clarify that any owner or operator of a source who requests an increase in the source's sulfur dioxide emission rate pursuant to Chapter 33–15–02–07.3 (see II.B.2 above) must demonstrate through a dispersion modeling analysis that the revised allowable emissions will not cause or contribute to a violation of the NAAQS, PSD increments, or any other Federal Clean Air Act requirements. The revision also provides for public and EPA review of such requests.

This language was added at EPA's request to ensure that the NAAQS, PSD increments, or any other Federal Clean Air Act requirements would be protected in light of the change in applicability of the State $SO_2$ AAQS, as discussed in section II.B.2 above. This revision is approvable.

*C. Delegation of Authority for NSPS*

With the September 28, 1998 submittal, North Dakota requested delegation of authority for implementation and enforcement of the NSPS (40 CFR part 60, subpart Ec) for hospital/medical/infectious waste incinerators pursuant to section 111(c) of the Clean Air Act, 42 U.S.C. 7411(c), as amended. On May 7, 1999, delegation was given with the following letter:

Ref: 8P–AR

Honorable Edward T. Schafer,
*Goveror of North Dakota, State Capitol, Bismarck, North Dakota 58505–0001.*

Re: Delegation of Clean Air Act New Source Performance Standards

Dear Governor Schafer: In a September 28, 1998, letter from you and an October 6, 1998, letter from Francis Schwindt, North Dakota Department of Health, the State of North Dakota requested delegation of authority for revisions to the New Source Performance Standards (NSPS), promulgated in Chapter 33–15–12 of the North Dakota Administrative Code. The State's NSPS regulations incorporate by reference the Federal NSPS in 40 CFR Part 60 as in effect on November 1, 1997, with the exception of subpart Eb, which the State has not adopted. In the above-mentioned letters, the State requests authority for implementation and enforcement of the NSPS through the delegation of authority process pursuant to section 111(c) of the Clean Air Act, 42 U.S.C. § 7411(c), as amended.

Subsequent to States adopting NSPS regulations, EPA delegates the authority for the implementation and enforcement of those standards, so long as the State's regulations are not less stringent than the Federal regulations. EPA has reviewed the pertinent statutes and regulations of the State of North Dakota and has determined that they provide an adequate and effective procedure for the implementation and enforcement of the NSPS by the State of North Dakota. Therefore, pursuant to Section 111(c) of the Clean Air Act (Act), as amended, and 40 CFR Part 60, EPA hereby delegates its authority for the implementation and enforcement of one NSPS to the State of North Dakota as follows:

(A) Responsibility for all sources located, or to be located, in the State of North Dakota

subject to the standards of performance for new stationary sources promulgated in 40 CFR Part 60 as in effect on November 1, 1997, with the exception of subpart Eb, which the State has not adopted. The additional category of new stationary sources covered by this delegation is hospital/medical/infectious waste incinerators for which construction is commenced after June 20, 1996 (subpart Ec).

(B) Not all authorities of NSPS can be delegated to states under Section 111(c) of the Act, as amended. The EPA Administrator retains authority to implement those sections of the NSPS that require: (1) approving equivalency determinations and alternative test methods, (2) decision making to ensure national consistency, and (3) EPA rulemaking to implement. Therefore, in delegating to North Dakota the implementation and enforcement authority for Subpart Ec, the following authorities shall be retained by the EPA Administrator and not transferred to the State: (1) the requirements of § 60.56c(i) establishing operating parameters when using controls other than those listed in § 60.56c(d); and (2) alternative methods of demonstrating compliance under § 60.8. For the other NSPS categories previously delegated to the State, our May 28, 1998, delegation letter lists those sections which can't be delegated to the State.

(C) As 40 CFR Part 60 is updated, North Dakota should revise its regulations accordingly and in a timely manner and submit to EPA requests for updates to its delegated authority.

This delegation is based upon and is a continuation of the conditions stated in EPA's original delegation letter of August 30, 1976, to the Honorable Arthur A. Link, then Governor of North Dakota, except that condition 5, relating to Federal facilities, has been voided by the Clean Air Act Amendments of 1977. It is also important to note that EPA retains concurrent enforcement authority, as stated in condition 2. In addition, if at any time there is a conflict between a State and a Federal NSPS regulation, the Federal regulation must be applied if it is more stringent than that of the State, as stated in condition 7. A copy of the August 30, 1976, letter was published in the notices section of the **Federal Register** on October 13, 1976 (41 FR 44884), along with the associated rulemaking notifying the public that certain reports and applications required from operators of new and modified sources shall be submitted to the State of North Dakota (41 FR 44859). Copies of the **Federal Register** notices are enclosed for your convenience.

Since this delegation is effective immediately, there is no need for the State to notify the EPA of its acceptance. Unless we receive written notice of objection from you within ten days of the date on which you receive this letter, the State of North Dakota will be deemed to have accepted all the terms of this delegation. An information notice will be published in the **Federal Register** in the near future informing the public of this delegation, in which this letter will appear in its entirety.

If you have any questions on this matter, please call me, or have your staff contact Richard Long, Director of our Air and Radiation Program, at 303–312–6005.

Sincerely yours,

William P. Yellowtail,

*Regional Administrator.*

Enclosures

cc: Francis Schwindt, ND Department of Health; Dana Mount, ND Department of Health

## III. Final Action

EPA is approving North Dakota's SIP revision, as submitted by the Governor with a letter dated September 28, 1998. The revisions in the September 28, 1998 submittal which are being approved in this document involve the following chapters of the North Dakota Administrative Code: 33–15–01 General Provisions; 33–15–02 Ambient Air Quality Standards; 33–15–05 Emissions of Particulate Matter Restricted; 33–15–07 Control of Organic Compounds Emissions; and 33–15–14 Designated Air Contaminant Sources, Permit to Construct, Minor Source Permit to Operate, Title V Permit to Operate (revisions specific to the Permit to Construct program only).

In addition, the September 28, 1998 submittal included revisions to Chapter 33–15–14, N.D.A.C., Designated Air Contaminant Sources, Permit to Construct, Minor Source Permit to Operate, Title V Permit to Operate (section specific to Title V Permit to Operate program), the State's 111(d) plan for existing hospital/medical/infectious waste incinerators, and a request for direct delegation of Chapter 33–15–22, N.D.A.C., Emission Standards for Hazardous Air Pollutants for Source Categories, all of which are being handled separately.

Finally, as requested by the State with its September 28, 1998 submittal, EPA is providing notice that it granted delegation of authority to North Dakota on May 7, 1999, to implement and enforce the NSPS promulgated in 40 CFR part 60, promulgated as of November 1, 1997 (except subpart Eb, which the State has not adopted). However, the State's NSPS authorities do not include those authorities which cannot be delegated to the states, as defined in 40 CFR part 60.

EPA is publishing this rule without prior proposal because the Agency views this as a noncontroversial amendment and anticipates no adverse comments. The State requested this action. However, in the ''Proposed Rules'' section of today's **Federal Register** publication, EPA is publishing a separate document that will serve as the proposal to approve the SIP revision if adverse comments should be filed. This rule will be effective November 1, 1999 without further notice unless the Agency receives adverse comments by September 30, 1999. If the EPA receives adverse comments, EPA will publish a timely withdrawal in the **Federal Register** informing the public that the rule will not take effect. EPA will address all public comments in a subsequent final rule based on the proposed rule. The EPA will not institute a second comment period on this action. Any parties interested in commenting must do so at this time.

## IV. Administrative Requirements

### *A. Executive Order 12866*

The Office of Management and Budget (OMB) has exempted this regulatory action from Executive Order 12866, entitled ''Regulatory Planning and Review.''

### *B. Executive Order 12875*

Executive Order 12875: Enhancing the Intergovernmental Partnership

Under Executive Order 12875, EPA may not issue a regulation that is not required by statute and that creates a mandate upon a state, local, or tribal government, unless the Federal Government provides the funds necessary to pay the direct compliance costs incurred by those governments, or EPA consults with those governments. If EPA complies by consulting, Executive Order 12875 requires EPA to provide to the Office of Management and Budget a description of the extent of EPA's prior consultation with representatives of affected state, local, and tribal governments, the nature of their concerns, copies of any written communications from the governments, and a statement supporting the need to issue the regulation. In addition, Executive Order 12875 requires EPA to develop an effective process permitting elected officials and other representatives of state, local, and tribal governments ''to provide meaningful and timely input in the development of regulatory proposals containing significant unfunded mandates.''

Today's rule does not create a mandate on State, local or tribal governments. The rules does not impose any enforceable duties on these entities. This rule has the effect of making existing, state-enforceable requirements federally enforceable. Accordingly, the requirements of section 1(a) of Executive Order 12875 do not apply to this rule.

### *C. Executive Order 13045*

Protection of Children from Environmental Health Risks and Safety Risks (62 FR 19885, April 23, 1997),

applies to any rule that: (1) Is determined to be ''economically significant'' as defined under E.O. 12866, and (2) concerns an environmental health or safety risk that EPA has reason to believe may have a disproportionate effect on children. If the regulatory action meets both criteria, the Agency must evaluate the environmental health or safety effects of the planned rule on children, and explain why the planned regulation is preferable to other potentially effective and reasonably feasible alternatives considered by the Agency.

EPA interprets E.O. 13045 as applying only to those regulatory actions that are based on health or safety risks, such that the analysis required under section 5–501 of the Order has the potential to influence the regulation. This rule is not subject to E.O. 13045 because it approves a state rule implementing a Federal standard.

*D. Executive Order 13084*

Executive Order 13084: Consultation with Coordination With Indian Tribal Governments

Under E.O. 13084, EPA may not issue a regulation that is not required by statute, that significantly affects or uniquely affects the communities of Indian tribal governments, and that imposes substantial direct compliance costs on those communities, unless the Federal government provides the funds necessary to pay the direct compliance costs incurred by the tribal governments, or EPA consults with those governments. If EPA complies by consulting, Executive Order 13084 requires EPA to provide to the Office of Management and Budget, in a separately identified section of the preamble to the rule, a description of the extent of EPA's prior consultation with representatives of affected tribal governments, a summary of the nature of their concerns, and a statement supporting the need to issue the regulation. In addition, Executive Order 13084 requires EPA to develop an effective process permitting elected officials and other representatives of Indian tribal governments ''to provide meaningful and timely input in the development of regulatory policies on matters that significantly or uniquely affect their communities.''

Today's rule does not significantly or uniquely affect the communities of Indian tribal governments. This rule does not create a mandate on tribal governments. Accordingly, the requirements of section 3(b) of Executive Order 13084 do not apply to this rule.

*E. Regulatory Flexibility Act*

The Regulatory Flexibility Act (RFA) generally requires an agency to conduct a regulatory flexibility analysis of any rule subject to notice and comment rulemaking requirements unless the agency certifies that the rule will not have a significant economic impact on a substantial number of small entities. Small entities include small businesses, small not-for-profit enterprises, and small governmental jurisdictions. This final rule will not have a significant impact on a substantial number of small entities because SIP approvals under section 110 and subchapter I, part D of the Clean Air Act do not create any new requirements but simply approve requirements that the State is already imposing. Therefore, because the Federal SIP approval does not create any new requirements, I certify that this action will not have significant economic impact on a substantial number of small entities. Moreover, due to the nature of the Federal-State relationship under the Clean Air Act, preparation of a flexibility analysis would constitute Federal inquiry into the economic reasonableness of state action. The Clean Air Act forbids EPA to base its actions concerning SIPs on such grounds. *Union Electric Co.* v. *U.S. E.P.A.*, 427 U.S. 246, 256–66 (1976); 42 U.S.C. 7410(a)(2).

*F. Unfunded Mandates*

Under section 202 of the Unfunded Mandates Reform Act of 1995 (''Unfunded Mandates Act''), signed into law on March 22, 1995, EPA must prepare a budgetary impact statement to accompany any proposed or final rule that includes a Federal mandate that may result in estimated costs to State, local, or tribal governments in the aggregate; or to the private sector, of $100 million or more. Under section 205, EPA must select the most cost-effective and least burdensome alternative that achieves the objectives of the rule and is consistent with statutory requirements. Section 203 requires EPA to establish a plan for informing and advising any small governments that may be significantly or uniquely impacted by the rule.

EPA has determined that the approval action promulgated does not include a Federal mandate that may result in estimated costs of $100 million or more to either State, local, or tribal governments in the aggregate, or to the private sector. This federal action approves pre-existing requirements under State or local law, and imposes no new requirements. Accordingly, no additional costs to State, local, or tribal governments, or to the private sector, result from this action.

*G. Submission to Congress and the Comptroller General*

The Congressional Review Act, 5 U.S.C. 801 *et seq.*, as added by the Small Business Regulatory Enforcement Fairness Act of 1996, generally provides that before a rule may take effect, the agency promulgating the rule must submit a rule report, which includes a copy of the rule, to each House of Congress and to the Comptroller General of the United States. EPA will submit a report containing this rule and other required information to the U.S. Senate, the U.S. House of Representatives, and the Comptroller General of the United States prior to publication of the rule in the **Federal Register**. This rule is not a ''major rule'' as defined by 5 U.S.C. 804(2).

*H. Petitions for Judicial Review*

Under section 307(b)(1) of the Clean Air Act, petitions for judicial review of this action must be filed in the United States Court of Appeals for the appropriate circuit by November 1, 1999. Filing a petition for reconsideration by the Administrator of this final rule does not affect the finality of this rule for the purposes of judicial review nor does it extend the time within which a petition for judicial review may be filed, and shall not postpone the effectiveness of such rule or action. This action may not be challenged later in proceedings to enforce its requirements. (See section 307(b)(2).)

**List of Subjects**

*40 CFR Part 52*

Environmental protection, Air pollution control, Incorporation by reference, Intergovernmental relations, Particulate matter, Reporting and recordkeeping requirements, Sulfur oxides, and Volatile organic compounds.

*40 CFR Part 60*

Environmental protection, Air pollution control, Aluminum, Ammonium sulfate plants, Beverages, Carbon monoxide, Cement industry, Coal, Copper, Dry cleaners, Electric power plants, Fertilizers, Fluoride, Gasoline, Glass and glass products, Grains, Graphic arts industry, Household appliances, Insulation, Intergovernmental relations, Iron, Lead, Lime, Metallic and nonmetallic mineral processing plants, Metals, Motor vehicles, Natural gas, Nitric acid plants, Nitrogen dioxide, Paper and paper products industry, Particulate matter,

Paving and roofing materials, Petroleum, Phosphate, Plastics materials and synthetics, Reporting and recordkeeping requirements, Sewage disposal, Steel, Sulfur oxides, Tires, Urethane, Vinyl, Waste treatment and disposal, Wool, and Zinc.

Dated: August 5, 1999.

**Jack W. McGraw,**

*Acting Regional Administrator, Region VIII.*

Chapter I, title 40 of the Code of Federal Regulations is amended as follows:

## PART 52—[AMENDED]

1. The authority citation for part 52 continues to read as follows:

**Authority:** 42 U.S.C. 7401 et seq.

## Subpart JJ—North Dakota

2. Section 52.1820 is amended by adding paragraph (c)(31) to read as follows:

**§ 52.1820 Identification of plan.**

* * * * *

(c) * * *

(31) The Governor of North Dakota submitted revisions to the North Dakota State Implementation Plan and Air Pollution Control Rules with a letter dated September 28, 1998. The revisions address air pollution control rules regarding general provisions, ambient air quality standards, emissions of particulate matter and organic compounds, and the permit to construct program.

(i) Incorporation by reference.

(A) Revisions to the Air Pollution Control Rules as follows: General Provisions 33–15–01–04.6–52; Ambient Air Quality Standards 33–15–02–04, 33–15–02–0.3, 33–15–02–07.4, and Table 2; Emissions of Particulate Matter Restricted 33–15–05–03.1; Control of Organic Compound Emissions 33–15–07–01.1; and Designated Air Contaminant Sources, Permit to Construct, Minor Source Permit to Operate, Title V Permit to Operate 33–15–14–02.3.c, effective September 1, 1998.

(ii) Additional material.

(A) An April 10, 1997 letter from Dana Mount, North Dakota Department of Health, to Richard Long, EPA, to provide technical support documentation regarding the impact of SB2356 on sulfur dioxide emission limits for existing and new coal conversion facilities and petroleum refineries.

(B) A November 17, 1997 letter from William Delmore, North Dakota Assistant Attorney General, to Terry Lukas, EPA, to propose how the North Dakota Department of Health will implement the requirements of SB2356.

(c) A June 10, 1998 letter from Dana Mount, North Dakota Department of Health, to Richard Long, EPA, to provide technical support documentation regarding the revisions to Chapter 33–15–02, Ambient Air Quality Standards, and Chapter 33–15-14, Designated Air Contaminant Sources, Permit to Construct, Minor Source Permit to Operate, Title V Permit to Operate (revisions specific to the permit to construct section only).

(D) A December 1, 1998 letter from Dana Mount, North Dakota Department of Health, to Richard Long, EPA, to provide technical support documentation regarding how the State will enforce the revised sulfur dioxide standards in Chapter 33–15–02.

## PART 60—[AMENDED]

1. The authority citation for part 60 continues to read as follows:

**Authority:** 42 U.S.C. 7401, 7411, 7414, 7416, and 7601 as amended by the Clean Air Act Amendments of 1990, Pub. L. 101–549, 104 Stat. 2399 (November 15, 1990; 402, 409, 415 of the Clean Air Act as amended, 104 Stat. 2399, unless otherwise noted).

## Subpart A—General Provisions

2. In section 60.4 the table entitled ''Delegation Status of New Source Performance Standards ((NSPS) for Region VIII)'' is amended by adding the entry for ''Ec—Hospital/Medical/Infectious Waste Incinerators'' in alphabetical order to read as follows:

**§ 60.4 Address.**

* * * * *

(c) * * *

DELEGATION STATUS OF NEW SOURCE PERFORMANCE STANDARDS

[(NSPS) for Region VIII]

| Subpart | CO | MT [1] | ND | SD [1] | UT [1] | WY |
|---|---|---|---|---|---|---|
| * * * | * | | * | * | | * |
| Ec—Hospital/Medical/Infectious Waste Incinerators | ..... | ..... | ..... | (*). | | |
| * * * | * | | * | * | | * |

* Indicates approval of State regulation.

[1] Indicates approval of New Source Performance Standards as part of the State Implementation Plan (SIP).

[FR Doc. 99–22177 Filed 8–30–99; 8:45 am]

BILLING CODE 6560–50–M

## ENVIRONMENTAL PROTECTION AGENCY

## 40 CFR Part 300

**[FRL–6430–3]**

## National Oil and Hazardous Substances Pollution Contingency Plan; National Priorities List Update

**AGENCY:** Environmental Protection Agency.

**ACTION:** Notice of deletion of the Old Inland Pit Site from the National Priorities List.

**SUMMARY:** The Environmental Protection Agency (EPA), Region 10, announces the deletion of the Old Inland Pit Site from the National Priorities List (NPL). The NPL constitutes appendix B of 40 CFR part 300 which is the National Oil and Hazardous Substances Pollution Contingency Plan (NCP), which EPA promulgated pursuant to section 105 of the Comprehensive Environmental Response, Compensation, and Liability Act (CERCLA) of 1980, as amended. EPA and the State of Washington Department of Ecology have determined that no further cleanup under CERCLA is appropriate and that the selected remedy has been protective of human health and the environment.

**EFFECTIVE DATE:** August 31, 1999.

**FOR FURTHER INFORMATION CONTACT:** Beverly Gaines, U.S. Environmental Protection Agency, 1200 Sixth Avenue, Mail Stop ECL–110, Seattle, WA 98101, (206) 553–1066.

**SUPPLEMENTARY INFORMATION:** The site to be deleted from the NPL is: Old Inland

Pit, Spokane County, Spokane, Washington.

A Notice of Intent to Delete for this site was published on June 17, 1999, (64 FR 32468). The closing date for comments was July 16, 1999. EPA received no comments.

EPA identifies sites which appear to present a significant risk to public health, welfare, or the environment and it maintains the NPL as the list of those sites. Sites on the NPL may be the subject of Hazardous Substance Response Trust Fund-financed remedial actions. Any site deleted from the NPL remains eligible for Fund-financed remedial actions in the unlikely event that conditions at the site warrant such action. Section 300.425 of the NCP states that Fund-financed actions may be taken at sites deleted from the NPL. Deletion of a site from the NPL does not affect responsible party liability or impede Agency efforts to recover costs associated with response efforts.

### List of Subjects in 40 CFR Part 300

Environmental protection, Air pollution control, Chemicals, Hazardous substances, Hazardous waste, Intergovernmental relations, Penalties, Reporting and recordkeeping requirements, Superfund, Water pollution control, Water supply.

Dated: August 18, 1999.

**Charles E. Findley,**

*Acting Regional Administrator, Region 10.*

For the reasons set out in the preamble, 40 CFR Part 300 is amended as follows:

## PART 300—[AMENDED]

1. The authority citation for part 300 continues to read as follows:

**Authority:** 33 U.S.C. 1321(c)(2); 42 U.S.C. 9601–9657; E.O. 12777, 56 FR 54757, 3 CFR, 1991 Comp., p. 351; E.O. 12580, 52 FR 2923, 3 CFR, 1987 Comp., p. 193.

### Appendix B [Amended]

2. Table 1 of appendix B to part 300 is amended by removing ''Old Inland Pit, Spokane, Washington.''

[FR Doc. 99–22454 Filed 8–30–99; 8:45 am]

BILLING CODE 6560–50–P

## FEDERAL EMERGENCY MANAGEMENT AGENCY

## 44 CFR Part 206

## Federal Disaster Assistance for Disasters Declared on or after November 23, 1998

*CFR Correction*

In Title 44 of the Code of Federal Regulations, revised as of Oct. 1, 1998, page 471, part 206 is corrected by reinstating § 206.207 to read as follows:

**§ 206.207 Administrative and audit requirements.**

(a) *General.* Uniform administrative requirements which are set forth in 44 CFR part 13 apply to all disaster assistance grants and subgrants.

(b) *State administrative plan.* (1) The State shall develop a plan for the administration of the Public Assistance program that includes at a minimum, the items listed below:

(i) The designation of the State agency or agencies which will have the responsibility for program administration.

(ii) The identification of staffing functions in the Public Assistance program, the sources of staff to fill these functions, and the management and oversight responsibilities of each.

(iii) Procedures for:

(A) Notifying potential applicants of the availability of the program;

(B) Conducting briefings for potential applicants and application procedures, program eligibility guidance and program deadlines;

(C) Assisting FEMA in determining applicant eligibility;

(D) Participating with FEMA in conducting damage surveys to serve as a basis for obligations of funds to subgrantees;

(E) Participating with FEMA in the establishment of hazard mitigation and insurance requirements;

(F) Processing appeal requests, requests for time extensions and requests for approval of overruns, and for processing appeals of grantee decisions;

(G) Compliance with the administrative requirements of 44 CFR parts 13 and 206;

(H) Compliance with the audit requirements of 44 CFR part 14;

(I) Processing requests for advances of funds and reimbursement; and

(J) Determining staffing and budgeting requirements necessary for proper program management.

(2) The Grantee may request the RD to provide technical assistance in the preparation of such administrative plan.

(3) In accordance with the Interim Rule published March 21, 1989, the Grantee was to have submitted an administrative plan to the RD for approval by September 18, 1989. An approved plan must be on file with FEMA before grants will be approved in a future major disaster. Thereafter, the Grantee shall submit a revised plan to the RD annually. In each disaster for which Public Assistance is included, the RD shall request the Grantee to prepare any amendments required to meet current policy guidance.

(4) The Grantee shall ensure that the approved administrative plan is incorporated into the State emergency plan.

(c) *Audit*—(1) *Nonfederal audit.* For grantees or subgrantees, requirements for nonfederal audit are contained in FEMA regulations at 44 CFR Part 14 or OMB Circular A–110 as appropriate.

(2) *Federal audit.* In accordance with 44 CFR part 14, Appendix A, Para. 10, FEMA may elect to conduct a Federal audit of the disaster assistance grant or any of the subgrants.

[55 FR 2304, Jan. 23, 1990; 55 FR 5458, Feb. 15, 1990]

[FR Doc. 99–55526 Filed 8–30–99; 8:45 am]

BILLING CODE 1505–01–D

## DEPARTMENT OF TRANSPORTATION

## Coast Guard

## 46 CFR Part 69

**[USCG–1999–5118]**

**RIN 2115–AF76**

## Standard Measurement System Exemption from Gross Tonnage

**AGENCY:** Coast Guard, DOT.

**ACTION:** Direct final rule.

**SUMMARY:** By this direct final rule, the Coast Guard amends its vessel tonnage regulations to reinstate a previously allowed method of holding tonnage opening cover plates in place. This amendment will increase flexibility and can decrease costs in vessel design and construction, while in no way diminishing vessel safety. The reinstated method was omitted in error during a comprehensive revision of the tonnage regulations in 1989.

**DATES:** This rule is effective November 29, 1999, unless a written adverse comment, or written notice of intent to submit an adverse comment, reaches the Docket Management Facility on or before November 1, 1999. If an adverse comment, or notice of intent to submit an adverse comment, is received, the Coast Guard will withdraw this direct

final rule and publish a timely notice of withdrawal in the **Federal Register**.

**ADDRESSES:** To make sure your comments and related material are not entered more than once in the docket, please submit them by only one of the following means:

(1) By mail to the Docket Management Facility (USCG–1999–5118), U.S. Department of Transportation, room PL–401, 400 Seventh Street SW., Washington, DC 20590–0001.

(2) By hand delivery to room PL–401 on the Plaza level of the Nassif Building, 400 Seventh Street SW., Washington, DC, between 9 a.m. and 5 p.m., Monday through Friday, except Federal holidays. The telephone number is 202–366–9329.

(3) By fax to the Docket Management Facility at 202–493–2251.

(4) Electronically through the Web Site for the Docket Management System at http://dms.dot.gov.

The Docket Management Facility maintains the public docket for this rulemaking. Comments and material received from the public, as well as documents mentioned in this preamble as being available in the docket, will become part of this docket and will be available for inspection or copying at room PL-401 on the Plaza level of the Nassif Building, 400 Seventh Street SW., Washington, DC, between 9 a.m., and 5 p.m., Monday through Friday, except Federal holidays. You may also find this docket on the Internet at http://dms.dot.gov.

**FOR FURTHER INFORMATION CONTACT:** For questions on this rule, call Mr. Peter Eareckson, Marine Safety Center, Coast Guard, telephone 202–366–6441. For questions on viewing or submitting material to the docket, call Dorothy Walker, Chief, Dockets, Department of Transportation, telephone 202–366–9329.

**SUPPLEMENTARY INFORMATION:**

## Request for Comments

The Coast Guard encourages you to participate in this rulemaking by submitting comments and related material. If you do so, please include your name and address, identify the docket number for this rulemaking (USCG–1999–5118), indicate the specific section of this document to which each comment applies, and give the reason for each comment. You may submit your comments and material by mail, hand delivery, fax, or electronic means to the Docket Management Facility at the address under **ADDRESSES;** but please submit your comments and material by only one means. If you submit them by mail or hand delivery, submit them in an unbound format, no larger than 8½ by 11 inches, suitable for copying and electronic filing. If you submit them by mail and would like to know they reached the Facility, please enclose a stamped, self-addressed postcard or envelope. We will consider all comments and material received during the comment period. We may change this rule in view of them.

## Regulatory Information

The Coast Guard is publishing a direct final rule, the procedures of which are outlined in 33 CFR 1.05–55, because no adverse comment is anticipated. If no adverse comment or written notice of intent to submit an adverse comment is received within the specified comment period, this rule will become effective as stated in the **DATES** section. In that case, approximately 30 days before the effective date, we will publish a document in the **Federal Register** stating that no adverse comment was received and confirming that this rule will become effective as scheduled. However, if we receive a written adverse comment or written notice of intent to submit an adverse comment, we will publish a document in the **Federal Register** announcing withdrawal of all or part of this direct final rule. If an adverse comment applies to only part of this rule and it is possible to remove that part without defeating the purpose of this rule, we may adopt as final those parts of this rule on which no adverse comment was received. The part of this rule that was the subject of an adverse comment will be withdrawn. If we decide to proceed with a rulemaking following receipt of an adverse comment, we will publish a separate Notice of Proposed Rulemaking (NPRM) and provide a new opportunity for comment.

A comment is considered ''adverse'' if the comment explains why this rule would be inappropriate, including a challenge to the rule's underlying premise or approach, or would be ineffective or unacceptable without a change.

## Background and Discussion of Changes

Coast Guard tonnage regulations in 46 CFR part 69, subpart C, provide exemptions from gross tonnage for superstructure spaces open to the weather. To qualify the associated space as open to weather, the end bulkhead is fitted either with shifting boards dropped into channel sections or with a temporary coverplate or boards held in place with hook bolts meeting the specific criteria stated in 46 CFR 69.117(d). Before 1989, the tonnage regulations allowed a bolting and crosspiece holding arrangement to keep the boards/plates in place. This alternative arrangement effectively ''sandwiched'' the associated bulkhead between the boards/plates and crosspieces. In a 1989 rulemaking (54 FR 37657, September 12, 1989), we revised and clarified the tonnage measurement regulations in 46 CFR part 69 without ''substantive change not called for under Public Law 99–509'' (which revised and consolidated the tonnage measurement laws into a new part J of 46 U.S.C. subtitle II). In revising part 69, we omitted this alternative holding method in error.

Recently the Coast Guard received complaints from vessel designers and builders that the deletion of the bolting and crosspiece option for tonnage opening covers reduced flexibility and increased costs in vessel design and construction with no advantage in safety or function. These complaints prompted the Coast Guard to review the 1989 rulemaking. We found that Public Law 99–509, the basis for the 1989 rule, did not address tonnage openings, and no Coast Guard records indicate any disadvantages to the bolting and crosspiece arrangement alternative. Our review determined that the bolting and crosspiece arrangement option was omitted in error during the 1989 rulemaking. We are reinstating this option by amending 46 CFR 69.117(d) and (e) accordingly. Additionally, we are making several editorial changes to this section to improve clarity. Paragraphs (d)(2) and (e)(3) are amended to add references to newly revised paragraphs (d)(5) and (d)(6).

## Regulatory Evaluation

This rule is not a ''significant regulatory action'' under section 3(f) of Executive Order 12866 and does not require an assessment of potential costs and benefits under section 6(a)(3) of that Order. The Office of Management and Budget has not reviewed it under that Order. It is not ''significant'' under the regulatory policies and procedures of the Department of Transportation (DOT)(44 FR 11040, February 26, 1979). We expect the economic impact of this rule to be so minimal that a full Regulatory Evaluation under paragraph 10e of the regulatory policies and procedures of DOT is unnecessary.

This rule will not impose any additional costs on industry. The reinstatement of the bolting and crosspiece arrangement, which was deleted in error in 1989, will allow for increased flexibility in vessel design and construction, while in no way diminishing vessel safety. This

regulation will make the use of the bolting and crosspiece arrangement, already an accepted industry practice, a legal alternative.

**Small Entities**

Under the Regulatory Flexibility Act (5 U.S.C. 601–612), we considered whether this rule will have a significant economic impact on a substantial number of small entities. The term ''small entities'' comprises small businesses, not-for-profit organizations that are independently owned and operated and are not dominant in their fields, and governmental jurisdictions with populations of less than 50,000.

This regulation will not add any additional costs to industry and will give industry increased flexibility in vessel design and construction. Therefore, the Coast Guard certifies under 5 U.S.C. 605(b) that this rule will not have a significant economic impact on a substantial number of small entities. Comments submitted in response to this finding will be evaluated under the criteria in the ''Regulatory Information'' section of this preamble.

**Assistance for Small Entities**

In accordance with section 213(a) of the Small Business Regulatory Enforcement Fairness Act of 1996 (Pub. L. 104–121), we want to assist small entities in understanding this rule so that they can better evaluate its effects on them and participate in the rulemaking process. If your small business or organization is affected by this rule and you have questions concerning its provisions or options for compliance, please contact Mr. Peter Eareckson, Marine Safety Center, Coast Guard, telephone 202–366–6441.

**Collection of Information**

This rule will call for no new collection of information under the Paperwork Reduction Act of 1995 (44 U.S.C. 3501 *et seq.*).

**Federalism**

We have analyzed this rule under E.O. 12612 and have determined that this rule does not have sufficient implications for federalism to warrant the preparation of a Federalism Assessment.

**Unfunded Mandates Reform Act and Enhancing the Intergovernmental Partnership**

The Unfunded Mandates Reform Act of 1995 (2 U.S.C. 1531–1538) and E.O. 12875, Enhancing the Intergovernmental Partnership, (58 FR 58093, October 28, 1993) govern the issuance of Federal regulations that require unfunded mandates. An unfunded mandate is a regulation that requires a State, local, or tribal government or the private sector to incur direct costs without the Federal Government's having first provided the funds to pay those costs. This rule will not impose an unfunded mandate.

**Taking of Private Property**

This rule will not effect a taking of private property or otherwise have taking implications under E.O. 12630, Governmental Actions and Interference with Constitutionally Protected Property Rights.

**Civil Justice Reform**

This rule meets applicable standards in sections 3(a) and 3(b)(2) of E.O. 12988, Civil Justice Reform, to minimize litigation, eliminate ambiguity, and reduce burden.

**Protection of Children**

We have analyzed this rule under E.O. 13045, Protection of Children from Environmental Health Risks and Safety Risks. This rule is not an economically significant rule and does not concern an environmental risk to health or risk to safety that may disproportionately affect children.

**Environment**

We considered the environmental impact of this rule and concluded that, under figure 2–1, paragraphs (34)(d) and (e) of Commandant Instruction M16475.lC, this rule is categorically excluded from further environmental documentation. A ''Categorical Exclusion Determination'' is available in the docket for inspection or copying where indicated under **ADDRESSES**.

**List of Subjects in 46 CFR Part 69**

Measurement standards, Reporting and recordkeeping requirements, Vessels.

For the reasons discussed in the preamble, the Coast Guard amends 46 CFR part 69 as follows:

## PART 69—STANDARD MEASUREMENT SYSTEM EXEMPTION FROM GROSS TONNAGE

1. The authority citation for part 69 continues to read as follows:

**Authority:** 46 U.S.C. 2301, 14103; 49 CFR 1.46.

2. In § 69.117—

a. In paragraph (d)(2) introductory text, remove the words ''paragraph (d)(4)'' and add, in their place, the words ''paragraphs (d)(4), (d)(5), and (d)(6)'';

b. Revise paragraph (d)(4) to read as follows;

c. Redesignate paragraph (d)(5) as paragraph (d)(7);

d. Add new paragraphs (d)(5) and (d)(6) to read as follows; and

e. In paragraph (e)(3), remove the words ''paragraph (d)(4)'' and add, in their place, the words ''paragraphs (d)(4), (d)(5), and (d)(6)'':

**§ 69.117 Spaces exempt from inclusion in gross tonnage.**

* * * * *

(d) * * *

(4) An interior or exterior opening that is temporarily closed by shifting boards dropped into channel sections at the sides of the opening is considered open to the weather if battening, caulking, or gaskets of any material are not used.

(5) An interior or exterior opening that is temporarily closed by cover plates or boards held in place only by hook bolts (see § 69.123, Figure 12) is considered open to the weather—

(i) If hook bolts used to secure cover plates or boards are spaced at least one foot apart and hook over a stiffener installed around the perimeter of the opening;

(ii) If the cover plates or boards fit tightly against the bulkhead; and

(iii) If battening, caulking, or gaskets of any material are not used.

(6) An interior or exterior opening that is temporarily closed by cover plates or boards held in place only by bolts and crosspieces is considered open to the weather—

(i) If the bolts are not installed through the bulkhead;

(ii) If the bolts and crosspieces are not held in place by cleats or other attachments to or through the bulkhead;

(iii) If the cover plates or boards fit tightly against the bulkhead; and

(iv) If battening, caulking, or gaskets of any material are not used.

* * * * *

Dated: August 19, 1999.

**Joseph J. Angelo,**

*Director of Standards, Marine Safety and Environmental Protection.*

[FR Doc. 99–22213 Filed 8–30–99; 8:45 am]

BILLING CODE 4910–15–P

---

## FEDERAL COMMUNICATIONS COMMISSION

## 47 CFR Part 73

**[DA 99–1668; MM Docket No. 98–223; RM–9340; RM–9481; RM–9482]**

## Radio Broadcasting Services; Cherry Valley, AR; Cotton Plant, AR

**AGENCY:** Federal Communications Commission.

**ACTION:** Final rule.

**SUMMARY:** The Commission denies a petition for rule making filed by ALALATEX Broadcasters, proposing the allotment of FM Channel 257A to Cherry Valley, Arkansas (RM–9340). *See* 63 FR 69609, December 17, 1998. In response to separate counterproposals filed on behalf of Woodruff County Broadcasting (RM–9481) and Bobby Caldwell (RM–9482), the Commission allots Channel 257A to Cotton Plant, Arkansas. Our determination was reached after comparatively evaluating each proposal. That analysis revealed that each community receives at least five full-time aural reception services. Therefore, Cotton Plant was preferred as it is the larger community. Coordinates used for Channel 257A at Cotton Plant are 34–55–32 NL and 91–09–32 WL. With this action, the proceeding is terminated.

**DATES:** Effective October 4, 1999.

**FOR FURTHER INFORMATION CONTACT:** Nancy Joyner, Mass Media Bureau, (202) 418–2180. Questions related to the application filing process should be addressed to the Audio Services Division, (202) 418–2700.

**SUPPLEMENTARY INFORMATION:** This is a synopsis of the Commission's Report and Order, MM Docket No. 98–223, adopted August 11, 1999, and released August 20, 1999. The full text of this Commission decision is available for inspection and copying during normal business hours in the FCC's Reference Information Center (Room CY–A257), 445 Twelfth Street, SW., Washington, DC. The complete text of this decision may also be purchased from the Commission's copy contractor, International Transcription Service, Inc., 1231 20th Street, NW., Washington, DC 20036, (202) 857–3800.

### List of Subjects in 47 CFR Part 73

Radio broadcasting.

Part 73 of Title 47 of the Code of Federal Regulations is amended as follows:

## Part 73—[AMENDED]

1. The authority citation for part 73 reads as follows:

**Authority:** 47 U.S.C. 154, 303, 334, 336.

### § 73.202 [Amended]

2. Section 73.202(b), the Table of FM Allotments under Arkansas, is amended by adding Cotton Plant, Channel 257A.

Federal Connunications Commission.

**John A. Karousos,**

*Chief, Allocations Branch, Policy and Rules Division, Mass Media Bureau.*

[FR Doc. 99–22506 Filed 8–30–99; 8:45 am]

BILLING CODE 6712–01–P

---

## FEDERAL COMMUNICATIONS COMMISSION

## 47 CFR Part 73

**[DA 99–1669; MM Docket No. 98–179; RM–9344]**

## Radio Broadcasting Services; Oraibi and Leupp, Arizona

**AGENCY:** Federal Communications Commission.

**ACTION:** Final rule.

**SUMMARY:** This document grants the request of Oraibi Media Association, permittee of Station KBDT(FM), Channel 255C, Oraibi, Arizona, to reallot Channel 255C to Leupp, Arizona, and modify its authorization accordingly. The new allotment to Leupp is preferred over the existing allotment at Oraibi because it will provide a first local transmission service to a more populous community. The transmitter site of Station KBDT(FM) will remain the same after the reallotment [42.2 kilometers (26.2 miles) north of Leupp at coordinates 35–26–34 NL and 110–58–40 WL]. This document terminates the proceeding.

**DATES:** Effective October 4, 1999.

**FOR FURTHER INFORMATION CONTACT:** R. Barthen Gorman, Mass Media Bureau, (202) 418–2180.

**SUPPLEMENTARY INFORMATION:** This is a synopsis of the Commission's Report and Order, MM Docket No. 98–179, adopted August 11, 1999, and released August 20, 1999. The full text of this Commission decision is available for inspection and copying during normal business hours in the FCC's Reference Information Center at Portals II, CY–A257, 445 12th Street, SW, Washington, DC. The complete text of this decision may also be purchased from the Commission's copy contractors, International Transcription Service, Inc., (202) 857–3800, located at 1231 20th Street, NW., Washington, DC 20036.

### List of Subjects in 47 CFR Part 73

Radio broadcasting.

## PART 73—[AMENDED]

1. The authority citation for Part 73 continues to read as follows:

**Authority:** 47 U.S.C. 154, 303, 334, 336.

### § 73.202 [Amended]

2. Section 73.202(b), the Table of FM Allotments under Arizona, is amended by adding Leupp, Channel 255C, and removing Oraibi, Channel 255C.

Federal Communications Commission.

**John A. Karousos,**

*Chief, Allocations Branch, Policy and Rules Division, Mass Media Bureau.*

[FR Doc. 99–22505 Filed 8–30–99; 8:45 am]

BILLING CODE 6712–01–P

---

## FEDERAL COMMUNICATIONS COMMISSION

## 47 CFR Part 73

**[DA 99–1665; MM Docket No. 99–113; RM–9544]**

## Radio Broadcasting Services; Cimarron, KS

**AGENCY:** Federal Communications Commission.

**ACTION:** Final rule.

**SUMMARY:** This document allots Channel 222A to Cimarron, Kansas, as that community's first local aural transmission service in response to a petition for rule making filed by Nancy Puopolo. *See* 64 FR 17143, April 8, 1999. Coordinates used for Channel 222A at Cimarron are 37–48–41 NL and 100–23–09 WL. With this action, the proceeding is terminated.

**DATES:** Effective October 4, 1999. A filing window for Channel 222A at Cimarron, Kansas, will not be opened at this time. Instead, the issue of opening a filing window for this channel will be addressed by the Commission in a subsequent Order.

**FOR FURTHER INFORMATION CONTACT:** Nancy Joyner, Mass Media Bureau, (202) 418–2180.

**SUPPLEMENTARY INFORMATION:** This is a synopsis of the Commission's Report and Order, MM Docket No. 99–113, adopted August 11, 1999, and released August 20, 1999. The full text of this Commission decision is available for inspection and copying during normal business hours in the FCC's Reference Information Center (Room CY–A257), 445 Twelfth Street, SW., Washington, DC. The complete text of this decision may also be purchased from the Commission's copy contractor, International Transcription Service, Inc., 1231 20th Street, NW., Washington, DC 20036, (202) 857–3800.

### List of Subjects in 47 CFR Part 73

Radio broadcasting.

Part 73 of Title 47 of the Code of Federal Regulations is amended as follows:

## PART 73—[AMENDED]

1. The authority citation for part 73 reads as follows:

**Authority:** 47 U.S.C. 154, 303, 334, 336.

**§ 73.202 [Amended]**

2. Section 73.202(b), the Table of FM Allotments under Kansas, is amended by adding Cimarron, Channel 222A.

Federal Communications Commission.

**John A. Karousos,**

*Chief, Allocations Branch, Policy and Rules Division, Mass Media Bureau.*

[FR Doc. 99–22501 Filed 8–30–99; 8:45 am]

BILLING CODE 6712–01–P

---

## FEDERAL COMMUNICATIONS COMMISSION

## 47 CFR Part 73

**[DA 99–1665; MM Docket No. 99–111; RM–9539]**

## Radio Broadcasting Services; Taft, CA

**AGENCY:** Federal Communications Commission.

**ACTION:** Final rule.

**SUMMARY:** This document allots Channel 293A to Taft, California, as that community's second local FM transmission service in response to a petition for rule making filed by Mountain West Broadcasting. See 64 FR 17140, April 8, 1999. Coordinates used for Channel 293A at Taft are 35–08–18 NL and 119–27–30 WL. With this action, the proceeding is terminated.

**DATES:** Effective October 4, 1999. A filing window for Channel 293A at Taft, California, will not be opened at this time. Instead, the issue of opening a filing window for this channel will be addressed by the Commission in a subsequent Order.

**FOR FURTHER INFORMATION CONTACT:** Nancy Joyner, Mass Media Bureau, (202) 418–2180.

**SUPPLEMENTARY INFORMATION:** This is a synopsis of the Commission's Report and Order, MM Docket No. 99–111, adopted August 11, 1999, and released August 20, 1999. The full text of this Commission decision is available for inspection and copying during normal business hours in the FCC's Reference Information Center (Room CY–A257), 445 Twelfth Street, SW., Washington, DC. The complete text of this decision may also be purchased from the Commission's copy contractor, International Transcription Service, Inc., 1231 20th Street, NW., Washington, DC 20036, (202) 857–3800.

**List of Subjects in 47 CFR Part 73**

Radio broadcasting.

Part 73 of Title 47 of the Code of Federal Regulations is amended as follows:

## PART 73—[AMENDED]

1. The authority citation for part 73 reads as follows:

**Authority:** 47 U.S.C. 154, 303, 334, 336.

**§ 73.202 [Amended]**

2. Section 73.202(b), the Table of FM Allotments under California, is amended by adding Channel 293A at Taft.

Federal Communications Commission.

**John A. Karousos,**

*Chief, Allocations Branch, Policy and Rules Division, Mass Media Bureau.*

[FR Doc. 99–22500 Filed 8–30–99; 8:45 am]

BILLING CODE 6712–01–P

---

## FEDERAL COMMUNICATIONS COMMISSION

## 47 CFR Part 73

**[DA 99–1665; MM Docket No. 99–109; RM–9512]**

## Radio Broadcasting Services; Walsenburg, CO

**AGENCY:** Federal Communications Commission.

**ACTION:** Final rule.

**SUMMARY:** This document allots Channel 267C3 to Walsenburg, Colorado, as that community's second local FM transmission service in response to a petition for rule making filed by Mountain West Broadcasting. See 64 FR 17139, April 8, 1999. Coordinates used for Channel 267C3 at Walsenburg are 37–37–27 NL and 104–46–47 WL. With this action, the proceeding is terminated.

**DATES:** Effective October 4, 1999. A filing window for Channel 267C3 at Walsenburg, Colorado, will not be opened at this time. Instead, the issue of opening a filing window for this channel will be addressed by the Commission in a subsequent Order.

**FOR FURTHER INFORMATION CONTACT:** Nancy Joyner, Mass Media Bureau, (202) 418–2180.

**SUPPLEMENTARY INFORMATION:** This is a synopsis of the Commission's Report and Order, MM Docket No. 99–109, adopted August 11, 1999, and released August 20, 1999. The full text of this Commission decision is available for inspection and copying during normal business hours in the FCC's Reference Information Center (Room CY–A257), 445 Twelfth Street, SW., Washington, DC. The complete text of this decision may also be purchased from the Commission's copy contractor, International Transcription Service, Inc., 1231 20th Street, NW., Washington, DC 20036, (202) 857–3800.

**List of Subjects in 47 CFR Part 73**

Radio broadcasting.

Part 73 of Title 47 of the Code of Federal Regulations is amended as follows:

## PART 73—[AMENDED]

1. The authority citation for part 73 reads as follows:

**Authority:** 47 U.S.C. 154, 303, 334, 336.

**§ 73.202 [Amended]**

2. Section 73.202(b), the Table of FM Allotments under Colorado, is amended by adding Channel 267C3 at Walsenburg.

Federal Communications Commission.

**John A. Karousos,**

*Chief, Allocations Branch, Policy and Rules Division, Mass Media Bureau.*

[FR Doc. 99–22499 Filed 8–30–99; 8:45 am]

BILLING CODE 6712–01–P

---

## FEDERAL COMMUNICATIONS COMMISSION

## 47 CFR Part 73

**[DA 99–1665; MM Docket No. 99–107; RM–9510]**

## Radio Broadcasting Services; La Veta, CO

**AGENCY:** Federal Communications Commission.

**ACTION:** Final rule.

**SUMMARY:** This document allots Channel 277A to La Veta, Colorado, as that community's first local aural transmission service in response to a petition for rule making filed by Mountain West Broadcasting. *See* 64 FR 17139, April 8, 1999. Coordinates used for Channel 277A at La Veta are 37–30–54 NL and 105–00–18 WL. With this action, the proceeding is terminated.

**DATES:** Effective October 4, 1999. A filing window for Channel 277A at La Veta, Colorado, will not be opened at this time. Instead, the issue of opening a filing window for this channel will be addressed by the Commission in a subsequent Order.

**FOR FURTHER INFORMATION CONTACT:** Nancy Joyner, Mass Media Bureau, (202) 418–2180.

**SUPPLEMENTARY INFORMATION:** This is a synopsis of the Commission's Report and Order, MM Docket No. 99–107, adopted August 11, 1999, and released August 20, 1999. The full text of this Commission decision is available for inspection and copying during normal business hours in the FCC's Reference Information Center (Room CY–A257), 445 Twelfth Street, SW., Washington, DC. The complete text of this decision may also be purchased from the Commission's copy contractor, International Transcription Service, Inc., 1231 20th Street, NW., Washington, DC 20036, (202) 857–3800.

**List of Subjects in 47 CFR Part 73**

Radio broadcasting.

Part 73 of Title 47 of the Code of Federal Regulations is amended as follows:

## PART 73—[AMENDED]

1. The authority citation for part 73 reads as follows:

**Authority:** 47 U.S.C. 154, 303, 334, 336.

**§ 73.202 [Amended]**

2. Section 73.202(b), the Table of FM Allotments under Colorado, is amended by adding La Veta, Channel 277A.

Federal Communications Commission.

**John A. Karousos,**

*Chief, Allocations Branch, Policy and Rules Division, Mass Media Bureau.*

[FR Doc. 99–22498 Filed 8–30–99; 8:45 am]

BILLING CODE 6712–01–P

---

## FEDERAL COMMUNICATIONS COMMISSION

## 47 CFR Part 73

**[DA 99–1665; MM Docket No. 99–99; RM–9484]**

## Radio Broadcasting Services; Kensett, AR

**AGENCY:** Federal Communications Commission.

**ACTION:** Final rule.

**SUMMARY:** This document allots Channel 289A to Kensett, Arkansas, as that community's first local aural transmission service in response to a petition for rule making filed on behalf of White County Broadcasters. *See* 64 FR 17137, April 8, 1999. Coordinates used for Channel 289A at Kensett are 35–14–00 NL and 91–39–54 WL. With this action, the proceeding is terminated.

**DATES:** Effective October 4, 1999. A filing window for Channel 289A at Kensett, Arkansas, will not be opened at this time. Instead, the issue of opening a filing window for this channel will be addressed by the Commission in a subsequent Order.

**FOR FURTHER INFORMATION CONTACT:** Nancy Joyner, Mass Media Bureau, (202) 418–2180.

**SUPPLEMENTARY INFORMATION:** This is a synopsis of the Commission's Report and Order, MM Docket No. 99–99, adopted August 11, 1999, and released August 20, 1999. The full text of this Commission decision is available for inspection and copying during normal business hours in the FCC's Reference Information Center (Room CY–A257), 445 Twelfth Street, SW., Washington, DC. The complete text of this decision may also be purchased from the Commission's copy contractor, International Transcription Service, Inc., 1231 20th Street, NW., Washington, DC 20036, (202) 857–3800.

**List of Subjects in 47 CFR Part 73**

Radio broadcasting.

Part 73 of Title 47 of the Code of Federal Regulations is amended as follows:

## PART 73—[AMENDED]

1. The authority citation for part 73 reads as follows:

**Authority:** 47 U.S.C. 154, 303, 334, 336.

**§ 73.202 [Amended]**

2. Section 73.202(b), the Table of FM Allotments under Arkansas, is amended by adding Kensett, Channel 289A.

Federal Communications Commission.

**John A. Karousos,**

*Chief, Allocations Branch, Policy and Rules Division, Mass Media Bureau.*

[FR Doc. 99–22497 Filed 8–30–99; 8:45 am]

BILLING CODE 6712–01–P

---

## FEDERAL COMMUNICATIONS COMMISSION

## 47 CFR Part 73

**[DA 99–1665; MM Docket No. 99–100; RM–9491]**

## Radio Broadcasting Services; Somerton, AZ

**AGENCY:** Federal Communications Commission.

**ACTION:** Final rule.

**SUMMARY:** This document allots Channel 260C3 to Somerton, Arizona, as that community's first local aural transmission service in response to a petition for rule making filed by L. Topaz Enterprises, Inc. See 64 FR 17137, April 8, 1999. Coordinates used for Channel 260C3 at Somerton are 32–35–00 NL and 114–35–05 WL. As Somerton is located within 320 kilometers (199 miles) of the U.S.-Mexico border, concurrence of the Mexican government to this allotment was obtained. With this action, the proceeding is terminated.

**DATES:** Effective October 4, 1999. A filing window for Channel 260C3 at Somerton, Arizona, will not be opened at this time. Instead, the issue of opening a filing window for this channel will be addressed by the Commission in a subsequent Order.

**FOR FURTHER INFORMATION CONTACT:** Nancy Joyner, Mass Media Bureau, (202) 418–2180.

**SUPPLEMENTARY INFORMATION:** This is a synopsis of the Commission's Report and Order, MM Docket No. 99–100, adopted August 11, 1999, and released August 20, 1999. The full text of this Commission decision is available for inspection and copying during normal business hours in the FCC's Reference Information Center (Room CY–A257), 445 Twelfth Street, SW., Washington, DC. The complete text of this decision may also be purchased from the Commission's copy contractor, International Transcription Service, Inc., 1231 20th Street, NW., Washington, DC 20036, (202) 857–3800.

**List of Subjects in 47 CFR Part 73**

Radio broadcasting.

Part 73 of Title 47 of the Code of Federal Regulations is amended as follows:

## PART 73—[AMENDED]

1. The authority citation for part 73 reads as follows:

**Authority:** 47 U.S.C. 154, 303, 334, 336.

**§ 73.202 [Amended]**

2. Section 73.202(b), the Table of FM Allotments under Arizona, is amended by adding Somerton, Channel 260C3.

Federal Communications Commission.

**John A. Karousos,**

*Chief, Allocations Branch, Policy and Rules Division, Mass Media Bureau.*

[FR Doc. 99–22496 Filed 8–30–99; 8:45 am]

BILLING CODE 6712–01–P

## FEDERAL COMMUNICATIONS COMMISSION

### 47 CFR Part 73

**[DA 99–1665; MM Docket No. 99–101; RM–9494]**

### Radio Broadcasting Services; Augusta, KS

**AGENCY:** Federal Communications Commission.

**ACTION:** Final rule.

**SUMMARY:** This document allots Channel 263A to Augusta, Kansas, as that community's second local FM transmission service in response to a petition for rule making filed by L. Topaz Enterprises, Inc. *See* 64 FR 17137, April 8, 1999. Coordinates used for Channel 263A at Augusta are 37–41–12 NL and 96–58–30 WL. With this action, the proceeding is terminated.

**DATES:** Effective October 4, 1999. A filing window for Channel 263A at Augusta, Kansas, will not be opened at this time. Instead, the issue of opening a filing window for this channel will be addressed by the Commission in a subsequent Order.

**FOR FURTHER INFORMATION CONTACT:** Nancy Joyner, Mass Media Bureau, (202) 418–2180.

**SUPPLEMENTARY INFORMATION:** This is a synopsis of the Commission's Report and Order, MM Docket No. 99–101, adopted August 11, 1999, and released August 20, 1999. The full text of this Commission decision is available for inspection and copying during normal business hours in the FCC's Reference Information Center (Room CY–A257), 445 Twelfth Street, SW., Washington, DC. The complete text of this decision may also be purchased from the Commission's copy contractor, International Transcription Service, Inc., 1231 20th Street, NW., Washington, DC 20036, (202) 857–3800.

**List of Subjects in 47 CFR Part 73**

Radio broadcasting.

Part 73 of Title 47 of the Code of Federal Regulations is amended as follows:

### PART 73—[AMENDED]

1. The authority citation for part 73 reads as follows:

**Authority:** 47 U.S.C. 154, 303, 334, 336.

**§ 73.202 [Amended]**

2. Section 73.202(b), the Table of FM Allotments under Kansas, is amended by adding Channel 263A at Augusta.

Federal Communications Commission.

**John A. Karousos,**

*Chief, Allocations Branch, Policy and Rules Division, Mass Media Bureau.*

[FR Doc. 99–22495 Filed 8–30–99; 8:45 am]

BILLING CODE 6712–01–P

## FEDERAL COMMUNICATIONS COMMISSION

### 47 CFR Part 73

**[DA 99–1665; MM Docket No. 99–102; RM–9495]**

### Radio Broadcasting Services; Wellton, AZ

**AGENCY:** Federal Communications Commission.

**ACTION:** Final rule.

**SUMMARY:** This document allots Channel 240A to Wellton, Arizona, as that community's second local FM transmission service in response to a petition for rule making filed by L. Topaz Enterprises, Inc. *See* 64 FR 17142, April 8, 1999. Coordinates used for Channel 240A at Wellton are 32–40–18 NL and 114–08–18 WL. As Wellton is located within 320 kilometers (199 miles) of the U.S.-Mexico border, concurrence of the Mexican government to this allotment was requested but has not been received. Therefore, Channel 240A has been allotted to Wellton with the following interim condition: ''Operation with the facilities specified herein is subject to modification, suspension, or termination without right to a hearing if found by the Commission to be necessary in order to conform to the 1992 USA-Mexico FM Broadcast Agreement, or if specifically objected to by Mexico.'' The condition is a temporary measure as the Commission has determined that Channel 240A at Wellton complies with the Agreement. Upon receipt of an official response from the Mexican government, the interim condition may be removed. With this action, the proceeding is terminated.

**DATES:** Effective October 4, 1999. A filing window for Channel 240A at Wellton, Arizona, will not be opened at this time. Instead, the issue of opening a filing window for this channel will be addressed by the Commission in a subsequent Order.

**FOR FURTHER INFORMATION CONTACT:** Nancy Joyner, Mass Media Bureau, (202) 418–2180.

**SUPPLEMENTARY INFORMATION:** This is a synopsis of the Commission's Report and Order, MM Docket No. 99–102, adopted August 11, 1999, and released August 20, 1999. The full text of this Commission decision is available for inspection and copying during normal business hours in the FCC's Reference Information Center (Room CY–A257), 445 Twelfth Street, SW., Washington, DC. The complete text of this decision may also be purchased from the Commission's copy contractor, International Transcription Service, Inc., 1231 20th Street, NW., Washington, DC 20036, (202) 857–3800.

**List of Subjects in 47 CFR Part 73**

Radio broadcasting.

Part 73 of Title 47 of the Code of Federal Regulations is amended as follows:

### PART 73—[AMENDED]

1. The authority citation for part 73 reads as follows:

**Authority:** 47 U.S.C. 154, 303, 334, 336.

**§ 73.202 [Amended]**

2. Section 73.202(b), the Table of FM Allotments under Arizona, is amended by adding Channel 240A at Wellton.

Federal Communications Commission.

**John A. Karousos,**

*Chief, Allocations Branch, Policy and Rules Division, Mass Media Bureau.*

[FR Doc. 99–22494 Filed 8–30–99; 8:45 am]

BILLING CODE 6712–01–P

## FEDERAL COMMUNICATIONS COMMISSION

### 47 CFR Part 73

**[DA 99–1665; MM Docket No. 99–105; RM–9508]**

### Radio Broadcasting Services; Center, CO

**AGENCY:** Federal Communications Commission.

**ACTION:** Final rule.

**SUMMARY:** This document allots Channel 287A to Center, Colorado, as that community's first local aural transmission service in response to a petition for rule making filed by Mountain West Broadcasting. *See* 64 FR 17141, April 8, 1999. Coordinates used for Channel 287A at Center are 37–45–00 NL and 106–06–24 WL. With this action, the proceeding is terminated.

**DATES:** Effective October 4, 1999. A filing window for Channel 287A at Center, Colorado, will not be opened at this time. Instead, the issue of opening a filing window for this channel will be addressed by the Commission in a subsequent Order.

**FOR FURTHER INFORMATION CONTACT:** Nancy Joyner, Mass Media Bureau, (202) 418–2180.

**SUPPLEMENTARY INFORMATION:** This is a synopsis of the Commission's Report and Order, MM Docket No. 99–105, adopted August 11, 1999, and released August 20, 1999. The full text of this Commission decision is available for inspection and copying during normal business hours in the FCC's Reference Information Center (Room CY–A257), 445 Twelfth Street, SW., Washington, DC. The complete text of this decision may also be purchased from the Commission's copy contractor, International Transcription Service, Inc., 1231 20th Street, NW., Washington, DC 20036, (202) 857–3800.

**List of Subjects in 47 CFR Part 73**

Radio broadcasting.

Part 73 of Title 47 of the Code of Federal Regulations is amended as follows:

## PART 73—[AMENDED]

1. The authority citation for part 73 reads as follows:

**Authority:** 47 U.S.C. 154, 303, 334, 336.

**§ 73.202 [Amended]**

2. Section 73.202(b), the Table of FM Allotments under Colorado, is amended by adding Center, Channel 287A.

Federal Communications Commission.

**John A. Karousos,**

*Chief, Allocations Branch, Policy and Rules Division, Mass Media Bureau.*

[FR Doc. 99–22493 Filed 8–30–99; 8:45 am]

BILLING CODE 6712–01–P

---

## ENVIRONMENTAL PROTECTION AGENCY

**[FRL–6428–3]**

## 48 CFR Parts 1503, 1515, and 1552

## Acquisition Regulation: Contracting by Negotiation

**AGENCY:** Environmental Protection Agency.

**ACTION:** Final rule.

**SUMMARY:** The Environmental Protection Agency (EPA) is issuing this rule to amend the EPA Acquisition Regulation (EPAAR) regarding contracting by negotiation so that it will conform to the Federal Acquisition Regulation, as revised by Federal Acquisition Circular (FAC) 97–02.

**EFFECTIVE DATE:** September 30, 1999.

**FOR FURTHER INFORMATION CONTACT:** Leigh Pomponio, U.S. Environmental Protection Agency, Office of Acquisition Management (3802R), 401 M Street, SW., Washington, DC 20460, (202) 564–4364.

**SUPPLEMENTARY INFORMATION:**

### A. Background

FAC 97–02, published in the **Federal Register** (62 FR 51224) on September 30, 1997, completely revised FAR Part 15, Contracting by Negotiation. The final rule allowed agencies to delay implementation until January 1, 1998. EPA began implementation of the revised Part 15 as of December 19, 1997. The EPAAR was in substantive compliance with the revised FAR, but extensive redesignation of EPAAR subparts and sections was required for structural conformance. Accordingly, EPAAR Part 1515, Contracting by Negotiation, is revised in its entirety, and parts 1503, Improper Business Practices and Personal Conflicts of Interest, and 1552, Solicitation Provisions and Contract Clauses, are amended. No public comments were received.

### B. Executive Order 12866

This rule is not a significant regulatory action for the purposes of Executive Order 12866; therefore, no review is required by the Office of Information and Regulatory Affairs within the Office of Management and Budget (OMB).

### C. Paperwork Reduction Act

The Paperwork Reduction Act does not apply because this rule does not contain information collection requirements that require the approval of OMB under the Paperwork Reduction Act of 1980 (44 U.S.C. 3501 *et seq.*)

### D. Regulatory Flexibility Act

The EPA certifies that this rule does not exert a significant economic impact on a substantial number of small entities. The requirements to contractors under the rule impose no reporting, record-keeping, or any compliance costs.

### E. Unfunded Mandates

Title II of the Unfunded Mandates Reform Act of 1995 (UMRA), Public Law 104–4, establishes requirements for Federal agencies to assess their regulatory actions on State, local, and tribal governments, and the private sector. This rule does not contain a Federal mandate that may result in expenditures of $100 million or more for State, local, and tribal governments, in the aggregate, or the private sector in one year. Any private sector costs for this action relate to paperwork requirements and associated expenditures that are far below the level established for UMRA applicability. Thus, the rule is not subject to the requirements of sections 202 and 205 of the UMRA.

### F. Executive Order 13045

Protection of Children from Environmental Health Risks and Safety Risks (6 FR 19885, April 23, 1997), applies to any rule that: (1) Is determined to be economically significant as defined under Executive Order 12866, and (2) concerns an environmental health or safety risk that EPA has reason to believe may have a disproportionate effect on children. If the regulatory action meets both criteria, the Agency must evaluate the environmental health or safety effects of the planned rule on children, and explain why the planned regulation is preferable to other potentially effective and reasonably feasible alternatives considered by the Agency.

EPA interprets Executive Order 13045 as applying only to those regulatory actions that are based on health or safety risks, such that the analysis required under section 5–501 of the Order has the potential to influence the regulation. This rule is not subject to Executive Order 13045 because it does not establish an environmental standard intended to mitigate health or safety risks.

### G. Executive Order 12875

Under Executive Order 12875, EPA may not issue a regulation that is not required by statute and creates a mandate upon a State, local or tribal government, unless the Federal government provides the funds necessary to pay the direct compliance costs incurred by those governments. If the mandate is unfunded, EPA must provide OMB a description of the extent of EPA's prior consultation with representatives of affected State, local and tribal governments, the nature of their concerns, copies of any written communications from the governments, and a statement supporting the need to issue the regulation. In addition, Executive Order 12875 requires EPA to develop an effective process permitting elected officials and other representatives of State, local and tribal governments ''to provide meaningful and timely input in the development of regulatory proposals containing significant unfunded mandates.''

This rule does not create a mandate on State, local or tribal governments. The rule does not impose any enforceable duties on these entities. Accordingly, the requirements of

section 1(a) of Executive Order 12875 do not apply to this rule.

**H. Executive Order 13084**

Under Executive Order 13084, EPA may not issue a regulation that is not required by statute, that significantly or uniquely affects the communities of Indian tribal governments, and that imposes substantial direct compliance costs on those communities, unless the Federal government provides the funds necessary to pay the direct compliance costs incurred by the tribal governments. If the mandate is unfunded, EPA must provide to the OMB, in a separately identified section of the preamble to the rule, a description of the extent of EPA's prior consultation with representatives of affected tribal governments, a summary of the nature of their concerns, and a statement supporting the need to issue the regulation. In addition, Executive Order 13084 requires EPA to develop an effective process permitting elected and other representatives of Indian tribal governments ''to provide meaningful and timely input in the development of regulatory policies on matters that significantly or uniquely affect their communities.''

The rule does not significantly or uniquely affect the communities of Indian tribal governments. Accordingly, the requirements of section 3(b) of Executive Order 13084 do not apply to this rule.

**I. National Technology Transfer and Advancement Act of 1995**

Section 12(d) of the National Technology Transfer and Advancement Act of 1995 (''NTTAA''), Public Law 104–113, section 12(d) (15 U.S.C. 272 note) directs EPA to use voluntary consensus standards in its regulatory activities unless to do so would be inconsistent with applicable law or otherwise impractical. Voluntary consensus standards are technical standards (e.g., materials specifications, test methods, sampling procedures, and business practices) that are developed or adopted by voluntary consensus standards bodies. The NTTAA directs EPA to provide Congress, through OMB, explanations when the Agency decides not to use available and applicable voluntary consensus standards.

This rule does not involve technical standards. Therefore, EPA did not consider the use of any voluntary consensus standards.

**J. Submission to Congress and the General Accounting Office**

The Congressional Review Act, 5 U.S.C. 801 *et seq.*, as added by the Small Business Regulatory Enforcement Fairness Act of 1996, generally provides that before a rule may take effect, the agency promulgating the rule must submit a rule report, which includes a copy of the rule, to each House of Congress and to the Comptroller General of the United States. EPA will submit a report containing this rule and other required information to the U.S. Senate, the U.S. House of Representatives, and the Comptroller General of the United States prior to publication of the rule in the **Federal Register**. This action is not a ''major rule'' as defined by 5 U.S.C. 804(2). This rule will be effective September 30, 1999.

**Authority:** The provisions of this regulation are issued under 5 U.S.C. 301; section 205(c), 63 Stat. 390, as amended, 40 U.S.C. 486(c).

**List of Subjects in 48 CFR Parts 1503, 1515, and 1552**

Government procurement.

Therefore, 48 CFR Chapter 15 is amended as set forth below:

1. The authority citation for parts 1503, 1515, and 1552 continues to read as follows:

**Authority:** Sec. 205(c), 63 Stat. 390, as amended, 40 U.S.C. 486(c).

## PART 1503—[AMENDED]

2. Part 1503 is amended by revising subpart 1503.1 to read as follows:

### Subpart 1503.1—Safeguards

Sec.
1503.101–370 Personal conflicts of interest.
1503.104–5 Disclosure, protection, and marking of contractor bid or proposal information and source selection information.

### Subpart 1503.1—Safeguards

**1503.101–370 Personal conflicts of interest.**

(a) Each EPA employee (including special employees) engaged in source evaluation and selection is required to be familiar with the provisions of 40 CFR part 3 regarding personal conflicts of interest. The employee shall inform the Source Selection Authority (SSA) in writing if his/her participation in the source evaluation and selection process could be interpreted as a possible or apparent conflict of interest. The SSA will consult with appropriate Agency officials prior to the SSA's determination. The SSA shall relieve any EPA employee who has a conflict of interest of further duties in connection with the evaluation and selection process.

(b) Each EPA employee (including special employees, as defined by 1503.600–71(b)) involved in source evaluation and selection is required to comply with the Office of Government Ethics ethics provisions at 5 CFR part 2635.

**1503.104–5 Disclosure, protection, and marking of contractor bid or proposal information and source selection information.**

(a)(1) The Chief of the Contracting Office (CCO) is the designated official to make the decision whether support contractors are used in proposal evaluation (as authorized at FAR 15.305(c) and as restricted at FAR 37.203(d)).

(2) The following written certification and agreement shall be obtained from the non-Government evaluator prior to the release of any proposal to that evaluator:

**''Certification on the Use and Disclosure of Proposals''**

RFP #: _____

Offeror: _____

1. I hereby certify that to the best of my knowledge and belief, no conflict of interest exists that may diminish my capacity to perform an impartial, technically sound, objective review of this proposal(s) or otherwise result in a biased opinion or unfair competitive advantage.

2. I agree to use any proposal information only for evaluation purposes. I agree not to copy any information from the proposal(s), to use my best effort to safeguard such information physically, and not to disclose the contents of nor release any information relating to the proposal(s) to anyone outside of the evaluation team assembled for this acquisition or individuals designated by the contracting officer.

3. I agree to return to the Government all copies of proposals, as well as any abstracts, upon completion of the evaluation.

_____

(Name and Organization)

_____

(Date of Execution)

(End of Certificate)

(b) Information contained in proposals will be protected and disclosed to the extent permitted by law, and in accordance with FAR 3.104–5, 15.207, and Agency procedures at 40 CFR part 2.

3. Part 1515 is revised to read as follows.

## PART 1515—CONTRACTING BY NEGOTIATION

Sec.
1515.000 Scope of part.

**Subpart 1515.2—Solicitation and Receipt of Proposals and Information**

1515.209 Solicitation provisions and contract clauses.

**Subpart 1515.3—Source Selection**

1515.302 Applicability.
1515.303 Responsibilities.
1515.305 Proposal evaluation.
1515.305–70 Scoring plans.
1515.305–71 Documentation of proposal evaluation.
1515.305–72 Release of cost information.
1515.308–71 Documentation of source selection.

**Subpart 1515.4—Contract Pricing**

1515.404–4 Profit.
1515.404–470 Policy.
1515.404–471 EPA structured approach for developing profit or fee objectives.
1515.404–472 Other methods.
1515.404–473 Limitations.
1515.404–474 Waivers.
1515.404–475 Cost realism.
1515.408 Solicitation provisions and contract clauses.

**Subpart 1515.6—Unsolicited proposals**

1515.604 Agency points of contact.
1515.606–70 Contracting methods.

### 1515.000 Scope of part.

This part implements and supplements FAR part 15. It prescribes the Environmental Protection Agency policies and procedures for contracting for supplies and services by negotiation.

## Subpart 1515.2—Solicitation and Receipt of Proposals and Information

### 1515.209 Solicitation provisions and contract clauses.

In addition to those provisions prescribed at FAR 15.209 and in accordance with FAR 15.203(a)(4), the contracting officer shall identify and include the evaluation factors that will be considered in making the source selection and their relative importance in each solicitation.

(a) The contracting officer shall insert the provisions at 1552.215–70, ''EPA Source Evaluation and Selection Procedures—Negotiated Procurement'' and either: the provision at 1552.215–71, ''Evaluation Factors for Award,'' where all evaluation factors other than cost or price when combined are significantly more important than cost or price; or the provision in Alternate I to 1552.215–71, where all evaluation factors other than cost or price when combined are significantly less important than cost or price; or the provision in Alternate II to 1552.215–71, where all evaluation factors other than cost or price when combined are approximately equal to cost or price; or Alternate III to 1552.215–71 where award will be made to the offeror with the lowest-evaluated cost or price whose proposal meets or exceeds the acceptability standards for non-cost factors.

(b) Evaluation factors and significant subfactors should be prepared in accordance with FAR 15.305 and inserted into paragraph (b) of the provision at 1552.215–71, Alternate I, Alternate II, and if used, in Alternate III.

## Subpart 1515.3—Source Selection

### 1515.302 Applicability.

FAR subpart 15.3 and this subpart apply to the selection of source or sources in competitive negotiation acquisitions in excess of the simplified acquisition threshold, except architect-engineering services which are covered in 1536.6.

### 1515.303 Responsibilities.

The Source Selection Authority (SSA) shall be established at the levels specified as follows:

(a) Acquisitions having a potential value exceeding $25,000,000: CCO.

(b) Acquisitions having a potential value exceeding $10,000,000 to $25,000,000: To be determined by the CCO, unless otherwise restricted in his/her delegation of procurement authority.

(c) Acquisitions having a potential value of $10,000,000 or less: The contracting officer.

### 1515.305 Proposal evaluation.

### 1515.305–70 Scoring plans.

When trade-offs are performed (in accordance with FAR 15.101–1), the evaluation of technical and past performance shall be accomplished using the following scoring plan or one specifically developed for the solicitation, e.g., other numeric, adjectival, color rating systems, etc.

SCORING PLAN

| Value | Descriptive statement |
|---|---|
| 0 | The factor is not addressed, or is totally deficient and without merit. |
| 1 | The factor is addressed, but contains deficiencies and/or weaknesses that can be corrected only by major or significant changes to relevant portions of the proposal, or the factor is addressed so minimally or vaguely that there are widespread information gaps. In addition, because of the deficiencies, weaknesses, and/or information gaps, serious concerns exist on the part of the technical evaluation team about the offeror's ability to perform the required work. |
| 2 | Information related to the factor is incomplete, unclear, or indicates an inadequate approach to, or understanding of the factor. The technical evaluation team believes there is question as to whether the offeror would be able to perform satisfactorily. |
| 3 | The response to the factor is adequate. Overall, it meets the specifications and requirements, such that the technical evaluation team believes that the offeror could perform to meet the Government's minimum requirements. |
| 4 | The response to the factor is good with some superior features. Information provided is generally clear, and the demonstrated ability to accomplish the technical requirements is acceptable with the possibility of more than adequate performance. |
| 5 | The response to the factor is superior in most features. |

### 1515.305–71 Documentation of proposal evaluation.

In addition to the information required by FAR 15.305(a)(3), the technical evaluation documentation shall include:

(a) Score sheets prepared by each individual team member must be made available upon the contracting officer's request. For contracts valued at $10,000,000 or less, the technical evaluation may be recorded on the short form technical evaluation format (EPA Form 1900–61) or another form specifically developed for the solicitation; and

(b) A statement that the respective team members are free from actual or potential personal conflicts of interest, and are in compliance with the Office of Government Ethics ethics provisions at 5 CFR part 2635.

(c) Any information which might reveal that an offeror has an actual or

potential organizational conflict of interest.

(d) Any documentation related to exchanges with individual offerors.

**1515.305–72 Release of cost information.**

(a) In accordance with FAR 15.305(a)(4), the contracting officer may release the cost/price proposals to those members of the evaluation team who are evaluating proposals at his/her discretion.

(b) These individuals would then use this information to perform a cost realism analysis as described in FAR 15.404–1(d). Any inconsistencies between the proposals and the solicitation requirements and/or any inconsistencies between the cost/price and other than cost/price proposals should be identified.

**1515.308–71 Documentation of source selection.**

In addition to the information required by FAR 15.308, the source selection decision shall include:

(a) When there is only one proposal received or only one proposal in the competitive range, the contracting officer shall examine the solicitation to determine if it was unduly restrictive or flawed. As part of the source selection decision, the contracting officer shall address at a minimum, the following five factors: whether the requirement could have been broken up into smaller components; whether the solicitation provided adequate response time; whether the requirement could have been satisfied with reduced staffing levels (discussion may be combined with the first factor); if applicable, whether the work required on-site could otherwise be performed at a contractor's facility, avoiding the cost and logistical implications of relocating employees; and whether the geographical area of consideration was either too narrow or too broad, so as to adversely impact competition. If the contracting officer determines that the solicitation requirements unduly restrict competition, the contracting officer shall consider making appropriate changes to the solicitation, canceling the solicitation, and reissuing the solicitation incorporating the appropriate changes. For 8(a) competitive or small business competitive set-asides, if the contracting officer in consultation with the Office of Small and Disadvantaged Business Utilization determines that the solicitation requirements unduly restrict competition, the contracting officer shall consider making appropriate changes to the solicitation, canceling the solicitation, and reissuing the solicitation incorporating the appropriate changes.

(b) The contracting officer shall provide a copy of any source selection decision that includes an analysis of the five factors described in paragraph (a) of this section to the Competition Advocate after approval of the decision by the designated Source Selection Authority.

## Subpart 1515.4—Contract Pricing

**1515.404–4 Profit.**

This section implements FAR 15.404–4 and prescribes the EPA structured approach for establishing profit or fee prenegotiation objectives.

**1515.404–470 Policy.**

(a) The Agency's policy is to utilize profit to attract contractors who possess talents and skills necessary to the accomplishment of the objectives of the Agency, and to stimulate efficient contract performance. In negotiating profit/fee, it is necessary that all relevant factors be considered, and that fair and reasonable amounts be negotiated which give the contractor a profit objective commensurate with the nature of the work to be performed, the contractor's input to the total performance, and the risks assumed by the contractor.

(b) The purpose of EPA's structured approach is:

(1) To provide a standard method of evaluation;

(2) To ensure consideration of all relevant factors;

(3) To provide a basis for documentation and explanation of the profit or fee negotiation objective; and

(4) To allow contractors to earn profits commensurate with the assumption of risk.

(c) The profit-analysis factors prescribed in the EPA structured approach for analyzing profit or fee include those prescribed by FAR 15.404(d)(1), and additional factors authorized by FAR 15.404(d)(2) to foster achievement of program objectives. These profit or fee factors are prescribed in 1515.404–471.

**1515.404–471 EPA structured approach for developing profit or fee objectives.**

(a) *General.* To properly reflect differences among contracts, and to select an appropriate relative profit/fee in consideration of these differences, weightings have been developed for application by the contracting officer to standard measurement bases representative of the prescribed profit factors cited in FAR 15.404(d) and EPAAR 1515.404–471(b)(1). Each profit factor or subfactor, or its components, has been assigned weights relative to their value to the contract's overall effort, and the range of weights to be applied to each profit factor.

(b)(1) *Profit/fee factors.* The factors set forth in this paragraph, and the weighted ranges listed after each factor, shall be used in all instances where the profit/fee is negotiated.

CONTRACTOR'S INPUT TO TOTAL PERFORMANCE

| | Weight Range (Percent) |
|---|---|
| Direct material | 1 to 4. |
| Professional/technical labor | 8 to 15. |
| Professional/technical overhead | 6 to 9. |
| General labor | 5 to 9. |
| General overhead | 4 to 7. |
| Subcontractors | 1 to 4. |
| Other direct costs | 1 to 3. |
| General and administrative expenses. | 5 to 8. |
| Contractor's assumption of contract cost risk. | 0 to 6. |

(2) The contracting officer shall first measure the ''Contractor's Input to Total Performance'' by the assignment of a profit percentage within the designated weight ranges to each element of contract cost. Such costs are multiplied by the specific percentages to arrive at a specific dollar profit or fee.

(3) The amount calculated for facilities capital cost of money (FCCM) shall not be included as part of the cost base for computation of profit or fee. The profit or fee objective shall be reduced by an amount equal to the amount of facilities capital cost of money allowed. A complete discussion of the determination of facilities capital cost of money and its application and administration is set forth in FAR 31.205–10, and the Appendix to the FAR (see 48 CFR 9904.414).

(4) After computing a total dollar profit or fee for the Contractor's Input to Total Performance, the contracting officer shall calculate the specific profit dollars assigned for cost risk and performance. This is accomplished by multiplying the total Government cost objective, exclusive of any FCCM, by the specific weight assigned to cost risk and performance. The contracting officer shall then determine the profit or fee objective by adding the total profit dollars for the Contractor's Input to Total Performance to the specific dollar profits assigned to cost risk and performance. The contracting officer shall use EPA Form 1900–2 in hardcopy or electronic copy equivalent to facilitate the calculation of the profit or fee objective.

(5) The weight factors discussed in this section are designed for arriving at profit or fee objectives for other than nonprofit and not-for-profit organizations. Nonprofit and not-for-profit organizations are addressed as follows:

(i) Nonprofit and not-for-profit organizations are defined as those business entities organized and operated:

(A) Exclusively for charitable, scientific, or or educational purposes;

(B) Where no part of the net earnings inure to the benefit of any private shareholder or individual;

(C) Where no substantial part of the activities is for propaganda or otherwise attempting to influence legislation or participating in any political campaign on behalf of any candidate for public office; and

(D) Which are exempt from Federal income taxation under Section 51 of the Internal Revenue Code. (26 U.S.C.)

(ii) For contracts with nonprofit and not-for-profit organizations where fees are involved, special factor of −3 percent shall be assigned in all cases.

(c) *Assignment of values to specific factors*—(1) *General.* In making a judgment on the value of each factor, the contracting officer should be governed by the definition, description, and purpose of the factors, together with considerations for evaluation set forth in this paragraph.

(2) *Contractor's input to total performance.* This factor is a measure of how much the contractor is expected to contribute to the overall effort necessary to meet the contract performance requirements in an efficient manner. This factor, which is separate from the contractor's responsibility for contract performance, takes into account what resources are necessary, and the creativity and ingenuity needed for the contractor to perform the statement of work successfully. This is a recognition that within a given performance output, or within a given sales dollar figure, necessary efforts on the part of individual contractors can vary widely in both value, quantity, and quality, and that the profit or fee objective should reflect the extent and nature of the contractor's contribution to total performance. Greater profit opportunity should be provided under contracts requiring a high degree of professional and managerial skill and to prospective contractors whose skills, facilities, and technical assets can be expected to lead to efficient and economical contract performance. The evaluation of this factor requires an analysis of the cost content of the proposed contract as follows:

(i) *Direct material (purchased parts and other material).* (A) Analysis of these cost items shall include an evaluation of the managerial and technical effort necessary to obtain the required material. This evaluation shall include consideration of the number of orders and suppliers, and whether established sources are available or new sources must be developed. The contracting officer shall also determine whether the contractor will, for example, obtain the materials by routine orders or readily available supplies (particularly those of substantial value in relation to the total contract costs), or by detailed subcontracts for which the prime contractor will be required to develop complex specifications involving creative design.

(B) Consideration should be given to the managerial and technical efforts necessary for the prime contractor to administer subcontracts, and to select subcontractors, including efforts to break out subcontracts from sole sources, through the introduction of competition.

(C) Recognized costs proposed as direct material costs such as scrap charges shall be treated as material for profit evaluation.

(D) If intracompany transfers are accepted at price, in accordance with FAR 31.205–26(e), they should be excluded from the profit or fee computation. Other intracompany transfers shall be evaluated by individual components of cost, i.e., material, labor, and overhead.

(ii) *Professional/technical and general labor.* Analysis of labor should include evaluation of the comparative quality and level of the talents and experience to be employed. In evaluating labor for the purpose of assigning profit dollars, consideration should be given to the amount of notable scientific talent or unusual or scarce talent needed, in contrast to journeyman effort or supporting personnel. The diversity, or lack thereof, of scientific and engineering specialties required for contract performance, and the corresponding need for supervision and coordination, should also be evaluated.

(iii) *Overhead and general and administrative expenses.* (A) Where practicable, analysis of these overhead items of cost should include the evaluation of the individual elements of these expenses, and how much they contribute to contract performance. This analysis should include a determination of the amount of labor within these overhead pools, and how this labor would be treated if it were considered as direct labor under the contract. The allocable labor elements should be given the same profit consideration as if they were direct labor. The other elements of indirect cost pools should be evaluated to determine whether they are routine expenses such as utilities, depreciation, and maintenance, and therefore given less profit consideration.

(B) The contractor's accounting system need not break down its overhead expenses within the classification of professional/technical overhead, general overhead and general and administrative expenses.

(iv) *Subcontractors.* (A) Subcontract costs should be analyzed from the standpoint of the talents and skills of the subcontractors. The analysis should consider if the prime contractor normally should be expected to have people with comparable expertise employed as full-time staff, or if the contract requires skills not normally available in an employer-employee relationship. Where the prime contractor is using subcontractors to perform labor which would normally be expected to be done in-house, the rating factor should generally be at or near 1 percent. Where exceptional expertise is retained, or the prime contractor is participating in the mentor-protégé program, the assigned weight should be nearer to the high end of the range.

(v) *Other direct costs.* The analysis of these costs should be similar to the analysis of direct material.

(3) *Contractor's assumption of contract cost risk.* (i) The risk of contract costs should be shifted to the fullest extent practicable to contractors, and the Government should assign a rating that reflects the degree of risk assumption. Evaluation of this risk requires a determination of the degree of cost responsibility the contractor assumes, the reliability of the cost estimates in relation to the task assumed, and the chance of the contractor's success or failure. This factor is specifically limited to the risk of contract costs. Thus, such risks of losing potential profits in other fields are not within the scope of this factor.

(ii) The first determination of the degree of cost responsibility assumed by the contractor is related to the sharing of total risk of contract cost by the Government and the contractor, depending on selection of contract type. The extremes are a cost-plus-fixed-fee contract requiring only that the contractor use its best efforts to perform a task, and a firm-fixed-price contract for a complex item. A cost-plus-fixed-fee contract would reflect a minimum assumption of cost responsibility by the contractor, whereas a firm-fixed-price contract would reflect a complete assumption of cost responsibility by the

contractor. Therefore, in the first step of determining the value given for the contractor's assumption of contract cost risk, a lower rating would be assigned to a proposed cost-plus-fixed-fee best efforts contract, and a higher rating would be assigned to a firm-fixed-price contract.

(iii) The second determination is that of the reliability of the cost estimates. Sound price negotiation requires well-defined contract objectives and reliable cost estimates. An excessive cost estimate reduces the possibility that the cost of performance will exceed the contract price, thereby reducing the contractor's assumption of contract cost risk.

(iv) The third determination is that of the difficulty of the contractor's task. The contractor's task may be difficult or easy, regardless of the type of contract.

(v) Contractors are likely to assume greater cost risks only if the contracting officer objectively analyzes the risk incident to the proposed contract, and is willing to compensate contractors for it. Generally, a cost-plus-fixed-fee contract would not justify a reward for risk in excess of 1 percent, nor would a firm-fixed-price contract normally justify a reward of less than 4 percent. Where proper contract type selection has been made, the reward for risk by contract type would usually fall into the following percentage ranges:

| Type of contract | Percentage ranges |
|---|---|
| Cost-plus-fixed-fee | 0 to 1. |
| Prospective price determination | 4 to 5. |
| Firm-fixed-price | 4 to 6. |

(A) These ranges may not be appropriate for all acquisitions. The contracting officer might determine that a basis exists for high confidence in the reasonableness of the estimate, and that little opportunity exists for cost reduction without extraordinary efforts. The contractor's willingness to accept ceilings on their burden rates should be considered as a risk factor for cost-plus-fixed-fee contracts.

(B) In making a contract cost risk evaluation in an acquisition that involves definitization of a letter contract, consideration should be given to the effect on total contract cost risk as a result of partial performance under a letter contract. Under some circumstances, the total amount of cost risk may have been effectively reduced by the existence of a letter contract. Under other circumstances, it may be apparent that the contractor's cost risk remained substantially as great as though a letter contract had not been used. Where a contractor has begun work under an anticipatory cost letter, the risk assumed is greater than normal. To be equitable, the determination of a profit weight for application to the total of all recognized costs, both those incurred and those yet to be expended, must be made with consideration to all relevant circumstances, not just to the portion of costs incurred or percentage of work completed prior to definitization.

#### 1515.404–472 Other methods.

(a) Contracting officers may use methods other than those prescribed in 1515.404–470 for establishing profit or fee objectives under the following types of contracts and circumstances:

(1) Architect-engineering contracts;

(2) Personal service contracts;

(3) Management contracts, e.g., for maintenance or operation of Government facilities;

(4) Termination settlements;

(5) Services under labor-hour and time and material contracts which provide for payment on an hourly, daily, or monthly basis, and where the contractor's contribution constitutes the furnishing of personnel.

(6) Construction contracts; and

(7) Cost-plus-award-fee contracts.

(b) Generally, it is expected that such methods will:

(1) Provide the contracting officer with a technique that will ensure consideration of the relative value of the appropriate profit factors described under ''Profit Factors,'' in FAR 15.404–4(d) and

(2) Serve as a basis for documentation of the profit or fee objective.

#### 1515.404–473 Limitations.

(a) In addition to the limitations established by statute (see FAR 15.404–4(b)(4)(i)), no administrative ceilings on profits or fees shall be established, except those identified in EPAAR (48 CFR) 1516.404–273(b).

(b) The contracting officer shall not consider any known subcontractor profit/fee as part of the basis for determining the contractor profit/fee.

#### 1515.404–474 Waivers.

Under unusual circumstances, the CCO may specifically waive the requirement for the use of the guidelines. Such exceptions shall be justified in writing, and authorized only in situations where the guidelines method is unsuitable.

#### 1515.404–475 Cost realism.

The EPA structured approach is not required when the contracting officer is evaluating cost realism in a competitive acquisition.

#### 1515.408 Solicitation provisions and contract clauses.

(a) In addition to those provisions and clauses prescribed in FAR 15.408, when an exception to FAR 15.403–1 does not apply and no other means available can be used to ascertain whether a fair and reasonable price can be determined, the contracting officer may insert in negotiated solicitations the provisions at—

(1) 1552.215–72 when requesting information other than cost or pricing data, for cost-reimbursable, level-of-effort-contracts. Use Alternate I for cost-reimbursable, level-of-effort contracts when the Government's requirement is for fully dedicated staff for a twelve month period(s) of performance and performance is on a Government facility; Alternate II for acquisitions for cost-reimbursable, level-of-effort contracts when the Government's requirement is for fully dedicated staff for a twelve month period(s) of performance and performance is not on a Government facility; and Alternate III if the Government's requirement is for the acquisition of supplies or equipment. The contracting officer may make revisions, deletions, or additions to 1552.215–72 and its Alternates I–III as needed to fit an individual acquisition, and

(2) 1552.215–73, General Financial and Organizational Information.

(b) If uncompensated overtime is proposed, the resultant contract shall include the provisions at FAR 52.237–10 and include the provision at 1552.215–74. The contracting officer may use provisions substantially the same as 1552.215–74 without requesting a deviation to the EPAAR.

### Subpart 1515.6—Unsolicited Proposals

#### 1515.604 Agency points of contact.

The Director, Grants Administration Division (3903R), EPA, 401 M Street, SW, Washington, D.C. 20460, is the Agency contact point established to coordinate the receipt and handling of unsolicited proposals.

#### 1515.606–70 Contracting methods.

The Department of Housing and Urban Development-Independent Agencies Appropriation Act contains a requirement that none of the funds provided in the Act may be used for payment through grants or contracts to recipients that do not share in the cost of conducting research resulting from proposals that are not specifically solicited by the Government. Accordingly, contracts for research which result from unsolicited proposals shall provide for the contractor to bear

a portion of the cost of performance for work subject to the Act. The extent of the cost sharing shall reflect the mutuality of interest of the contractor and the Government. Therefore, where there is no measurable gain to the performing organization, cost sharing is not required.

4. In 1552.215–70, the section heading, the introductory text, and the provision heading are revised to read as follows:

**1552.215–70 EPA Source Evaluation and Selection Procedures—Negotiated Procurements**

As prescribed in 1515.209(a), insert the following provision:

1552.215–70 EPA Source Evaluation and Selection Procedures—Negotiated Procurements (Aug 1999)

* * * * *

5. 1552.215–71 is revised to read as follows:

**1552.215–71 Evaluation factors for award.**

As prescribed in 1515.209(a), insert one of the following provisions.

Evaluation Factors for Award (Aug 1999)

(a) The Government will make award to the responsible offeror(s) whose offer conforms to the solicitation and is most advantageous to the Government cost or other factors considered. For this solicitation, all evaluation factors other than cost or price when combined are significantly more important than cost or price.

(b) Evaluation factors and significant subfactors to determine quality of product or service:

_____

_____

[End of provision]

Evaluation Factors for Award (Aug 1999)—Alternate I (Aug 2000)

(a) The Government will make award to the responsible offeror(s) whose offer conforms to the solicitation and is most advantageous to the Government cost or other factors considered. For this solicitation, all evaluation factors other than cost or price when combined are significantly less important than cost or price.

(b) Evaluation factors and significant subfactors to determine quality of product or service:

_____

[End of provision]

_____

Evaluation Factors for Award, Aug 1999—Alternate II, Aug 2000

(a) The Government will make award to the responsible offeror(s) whose offer conforms to the solicitation and is most advantageous to the Government cost or other factors considered. For this solicitation, all evaluation factors other than cost or price when combined are approximately equal to cost or price.

(b) Evaluation factors and significant subfactors to determine the quality of product or service:

_____

_____

[End of provision]

Evaluation Factors for Award, Aug 1999—Alternate III, (Aug 2000)

(a) The Government will make award to the offeror with the lowest-evaluated cost or price, whose proposal meets or exceeds the acceptability standards for non-cost factors. In the event that there are two or more technically acceptable, equal price (cost) offers, the Government will consider socioeconomic, environmental and other similar factors, as listed below in descending order of importance:

_____

_____

(b) Factors and significant subfactors for technical acceptability evaluation:

_____

_____

(c) Factors for past performance evaluation (optional):

_____

_____

[End of provision]

6. 1552.215–73 is redesignated as 1552.215–72 and revised to read as follows:

**1552.215–72 Instructions for the Preparation of Proposals**

As prescribed in 1515.408(a)(1) insert the following provision:

Instructions for the Preparation of Proposals, (Aug 1999)

(a) Other than cost proposal instructions.

(1) Submit proposal for than cost factors as a separate part of the total proposal package. Omit all cost or pricing details from this proposal.

(2) Special proposal instructions:

_____

_____

(b) Cost or pricing proposal instructions. The offeror shall prepare and submit cost or pricing information data and supporting attachments in accordance with Table 15–2 of FAR 15.408. In addition to a hard copy of the information, to expedite review of the proposal, submit a 3.5'' high density IBM-compatible formatted computer disk containing the financial data required, if this information is available using a commercial spreadsheet program on a personal computer. Submit this information using LOTUS 1–2–3, if available. Identify which version of LOTUS used. If the offeror used another spreadsheet program, indicate the software program used to create this information. Offerors should include the formulas and factors used in calculating the financial data. Although submission of a computer disk will expedite review, failure to submit a disk will not affect consideration of the proposal.

(1) General—Submit cost or pricing information prepared in accordance with FAR Table 15–2, Instructions for Submitting Cost/Price Proposals When Cost or Pricing Information Are Required and the following:

(i) Clearly identify separate cost or pricing information associated with any:

(A) Options to extend the term of the contract;

(B) Options for the Government to order incremental quantities; and/or

(C) Major tasks, if required by the special instructions.

(ii) If the contract schedule includes a ''Fixed Rate for Services'' clause, please provide in the cost proposal a schedule duplicating the format in the clause and include proposed fixed hourly rates per labor category for the base and any optional contract periods.

(iii) If the contract includes the clause at EPAAR 1552.232–73 ''Payments—Fixed-Rate Services Contract,'' or the clause at FAR 52.232–7, ''Payments Under Time and Materials and Labor-Hour Contracts,'' include in the cost proposal the estimated costs and burden rate to be applied to materials, other direct costs, or subcontracts. The Government will include these costs as part of its cost proposal evaluation.

(iv) If other divisions, subsidiaries, a parent or affiliated companies will perform work, provide the name and location of such affiliate and offeror's intercompany pricing policy. Separately identify costs and supporting data for each entity proposed.

(v) The realism of costs, including personnel compensation rates (including effective hourly rates due to uncompensated overtime) will be part of the proposal evaluation. Any reductions to proposed costs or differences between proposed and known EPA/DCAA recommended rates must be fully explained. If an offeror makes a reduction which makes its offer or portions of its offer below anticipated costs, the offeror shall identify where (i.e., which elements of costs) the proposed reductions will be made. Unsubstantiated rates may result in an upward or downward adjustment of the cost proposals to reflect more realistic costs. Based on this analysis, a projected cost for the offeror will be calculated to reflect the Government's estimate of the offeror's probable costs. Any inconsistency, whether real or apparent, between the promised performance and cost or price should be explained. The burden of proof for cost credibility rests with the offeror.

(2) Direct Labor.

(i) The direct technical labor hours (level-of-effort) appearing in the solicitation are for professional and technical labor only. These hours do not include management at a level higher than project management, e.g., corporate and day-to-day management, nor do they include clerical and support staff at a level lower than technician. If it is the offeror's normal practice to charge these types of costs as direct costs, include these costs along with an estimate of the directly chargeable labor-hours for these personnel. These direct charges are to be shown separately from the technical (level-of-effort) effort. If this type of effort is normally included in the offeror's indirect cost allocations, no estimate is required. However, direct charging of these on any resulting contract will not be allowed. Additionally the direct technical labor hours are the workable hours required by the Government and do not include release time (i.e., holidays, vacation, etc.) Submit the proposal utilizing the labor categories and distribution of the level-of-effort specified in the

solicitation. These are approximate distribution levels and do not necessarily represent the actual levels which may be experienced during contract performance.

(ii) Explain the basis of the proposed labor rates, including a complete justification for all judgmental factors used to develop weights applied to company's category or individual rates that comprise the rates for labor categories specified in the solicitation. This explanation should describe how technical approach coincides with the proposed costs. If the proposed direct labor rates are based on an average of the individuals proposed to work on the contract, provide a list of the individuals proposed and the hours associated with each individual in deriving the rates. If the proposed direct labor rates are based on an average of company category rates, identify and describe the labor categories and the percentages associated with each category in deriving the rates, explaining in detail the basis for the percentages assigned.

(iii) Describe for each labor category proposed, the company's qualifications and experience requirements. If individual rates are used, provide the employee's name. If specific individuals are identified in the technical proposal, correlate these individuals with the labor categories specified in the solicitation.

(iv) Provide a matrix summarizing the effort proposed, including the subcontracts, by professional and technical level specified in the solicitation.

(v) Indicate whether current rates or escalated rates are used. If escalation is included, state the degree (percent) and methodology. The methodology shall include the effective date of the base rates and the policy on salary reviews (e.g. anniversary date of employee or salary reviews for all employees on a specific date).

(vi) State whether any additional direct labor (new hire or temporary hires) will be required during the performance period of this acquisition. If so, state the number required, the professional or technical level and the methodology used to estimate proposed labor rates.

(vii) With respect to educational institutions, include the following information for those professional staff members whose salary is expected to be covered by a stipulated salary support agreement pursuant to OMB Circular A–21.

(A) Individual's name;

(B) Annual salary and the period for which the salary is applicable;

(C) List of other research Projects or proposals for which salaries are allocated, and the proportionate time charged to each; and

(D) Other duties, such as teaching assignments, administrative assignments, and other institutional activities. Show the proportionate time charged to each. (Show proportionate time charges as a percentage of 100% of time for the entire academic year, exclusive of vacation or sabbatical leave.)

(viii) Uncompensated overtime. The decision to propose uncompensated overtime is the offeror's decision. Should the offeror, however, elect to propose uncompensated overtime, the offeror must propose a methodology that is consistent with their cost accounting practices and company policy. If proposed, provide an estimate of any uncompensated overtime proposed for exempt personnel working at the offeror's facilities. This estimate should identify the number of uncompensated labor hours and the percentage of compensated labor. Uncompensated labor hours are defined as hours for exempt personnel in excess of regular hours for a pay period which are actually worked and recorded in accordance with company policy. Provide a copy of the company policy on uncompensated overtime. Provide historical percentages of uncompensated overtime for the past three years. If proposed for subcontractors, provide separately with subcontractor information.

(ix) For labor rate contracts, for each fixed labor rate, offerors shall identify the basis for for the loaded fixed hourly rate for each contract period for example, the rate might consist of the following cost elements: raw wage or salary rate, plus fringe benefits (if applicable), plus overhead rate (if applicable), plus G&A expense rate (if applicable), plus profit.

When determining the composite raw wage for a labor category, the offeror shall:

(A) provide in narrative form the basis for the raw wage for each labor category. If actual wages of current employees are used, the basis for the projections should be explained.

(B) If employees are subject to the Service Contract Act or Davis Bacon Act, they must be compensated at least at the minimum wage rate required by the applicable Wage Determination.

(3) Indirect costs (fringe, overhead, general, and administrative expenses).

(i) If the rates have been recently approved, include a copy of the rate agreement. If the agreement does not cover the projected performance period of the proposed effort, provide the rationale and any estimated rate calculations for the proposed performance period.

(ii) Submit supporting documentation for rates which have not been approved or audited. Indicate whether computations are based upon historical or projected data.

(iii) Provide actual pool expenses, base dollars, or hours (as applicable for the past five years). Include the actual indirect rates for the past five years including the indirect rates proposed, the actual indirect rates experienced and, if available, the final negotiated rate. Indicate the amount of unallowable costs included in the historical data.

(iv) Offerors who propose indirect rates for new or substantially reorganized cost centers should consider offering to accept ceilings on the indirect rates at the proposed rates. Similarly, offerors whose subcontractors propose indirect rates for new or substantially reorganized cost centers should likewise consider offering to accept ceilings on the subcontractors' indirect rates at the proposed rates.

**Note to paragraph (b)(3)(iv):** The Government reserves the right to adjust an offeror's or its subcontractor's estimated indirect costs for evaluation purposes based on the Agency's judgment of the most probable costs up to the amount of any stated ceiling.

(v) If the employees are subject to the Service Contract Act or Davis Bacon Act, employees must receive the minimum level of benefits stated in the applicable Wage Determination.

(4) Travel expense.

(i) If the solicitation specifies the amount of travel costs, this amount is exclusive of any applicable indirect costs and fee.

(ii) If the solicitation does not specify the amount of travel costs, attach a schedule illustrating how travel was computed. Include a breakdown indicating number of trips, number of travelers, destinations from and to, purpose and cost, e.g., mileage, transportation costs, subsistence rates.

(5) Equipment, facilities and special equipment, including tooling.

(i) If direct charges for use of existing contractor equipment are proposed, provide a description of these items, including estimated usage hours, rates, and total costs.

(ii) If equipment purchases are proposed, provide a description of these items, and a justification as to why the Government should furnish the equipment or allow its purchase with contract funds. (Unless specified elsewhere in this solicitation, FAR 45.302–1 requires contractors to furnish all facilities in performance of contracts with certain limited exceptions.)

(iii) Identify Government-owned property in the possession of the offeror or proposed to be used in the performance of the contract, and the Government agency which has cognizance over the property.

(iv) Submit proposed rates or use charges for equipment, along with documentation to support those rates.

(v) If special purposes facilities or equipment are being proposed, provide a description of these items, details for the proposed costs including competitive prices, and justification as to why the Government should furnish the equipment or allow its purchase with contract funds.

(vi) If fabrication by the prime contractor is contemplated, include details of material, labor, and overhead.

(6) Other Direct Costs (ODC).

(i) If the solicitation specifies the amount of other direct costs, this amount is exclusive of any applicable indirect cost and fee.

(ii) If the amount is not specified in the solicitation, attach a schedule detailing how other direct costs were computed. Identify the major ODC items that under the accounting system would be a direct charge on any resulting contract.

(iii) If any of the cost elements identified as part of the specified other direct costs are recovered as an indirect cost, in accordance with the offeror's accounting system, those costs should not be included as a direct cost. Complete explanation of this adjustment and the contractor's practice should be provided.

(iv) Provide historical other direct costs dollars per level of effort hour on similar contracts or work assignments.

(7) Team Subcontracts. When the cost of a subcontract is substantial (5 percent of the total estimated contract dollar value or $100,000, whichever is less), the offeror shall include the following subcontractor information:

(i) Provide details of subcontract costs in the same format as the prime contractor's

costs. This detailed information may be provided separately to the EPA if the subcontractor does not wish to provide this data to the prime contractor. Cost data provided separately by a contractor must be received by the time, date and at the location specified for the receipt of proposals. The subcontractor's package should be clearly marked with the RFP number, the name of the prime offeror, and a statement that the package is subcontractor data relevant to the proposal from the prime offeror. If submitted with the prime contractor's proposal, identify the subcontractors. State the amount of service estimated to be required and the quoted daily or hourly rate. Offerors are encouraged to provide letters of intent, signed by subcontractors, agreeing to a specified rate for life of the contract. Include a cost or price analysis of the subcontractor cost showing the reasons why the costs are considered reasonable;

(ii) Describe how the prospective team subcontractors were chosen as part of the offeror's proposed team; and rationale for selection;

(iii) Describe the necessity for the subcontractor's effort as either a supplement or complement to the offeror's in-house expertise;

(iv) Identify the areas of the scope of work and the level of effort the subcontractors are anticipated to perform. Provide a reconciliation summary of the proposed hours and ODCs for the prime contractor and proposed subcontractor(s).

(v) Describe the prime contractor's management structure and internal controls to ensure efficient and quality performance of team subcontractors.

(8) Facilities Capital Cost of Money (FCCM). When an offeror elects to claim FCCM as an allowable cost, the offeror must submit Form CASB-CNF and show calculation of the proposed amount. FCCM will be an allowable cost under the contemplated contract, if the criteria for allowability at FAR 31.205–10(a)(2) are met.

[End of Provision]

Alternate I, Aug 1999. If the Government's requirement is a fully dedicated staff person for a twelve month period(s) for each specified position and performance is on a Government facility, add the following paragraph (b)(2)(x) to the basic provision:

(x) The level of effort for each position is to be proposed in work years. A work year is considered to consist of 2080 hours inclusive of direct and indirect time (40 hours per week × 52 weeks per year=2080 hours). The proposal must identify proposed work years and clearly identify how many hours in each work year are direct (i.e., productive working hours) and how many are indirect (i.e., paid absences). If the company policy includes a different base work week, the total available hours would be different. For example, if the company's policy calls for a 37.5 hour work week, offeror would deduct paid absences from 1950 hour (37.5 hours/week × 52 weeks/year=1950 hours). Offeror should clearly identify the paid absences as to how many hours are for holiday and how many hours are for vacation and sick leave. The amount of indirect time (paid absences) identified in the proposal must be consistent with company policy and must allow for the ten Federal government holidays.

Alternate II, Aug 1999. If the Government's requirement is a fully dedicated staff person for a twelve month period(s) for each specified position and performance is not on a Government facility; add the following paragraph (b)(2)(x) to the basic provision:

(x) The level of effort for each position is to be proposed in work years. A work year is considered to consist of 2080 hours inclusive of direct and indirect time (40 hours per week × 52 weeks per year=2080 hours). The proposal must identify proposed work years and clearly identify how many hours in each work year are direct (i.e., productive working hours) and how many are indirect (i.e., paid absences). If the company policy includes a different base work week, the total available hours would be different. For example, if the company's policy calls for a 37.5 hour work week, offeror would deduct paid absences from 1950 hour (37.5 hours/week × 52 weeks/year=1950 hours). Offeror should clearly identify the paid absences as to how many hours are for holiday and how many hours are for vacation and sick leave.

Alternate III, Aug 1999. If the requirement is for the acquisition of supplies or equipment, substitute the following paragraphs (a)(iv)—(viii) and add (a)(ix) and (b).

(iv) Provide information as to how the proposed supplies or equipment meet the salient characteristics required by the contract line item;

(v) Provide published brochures, catalogs, or other technical literature by contract line item;

(vi) Meet any interface or compatibility requirements by contract line item;

(vii) Describe warranty services and how delivered by contract line item;

(viii) Assumptions, deviations and exceptions (as necessary); and

(ix) Additional information.

(b) Supplies—Provide unit pricing by contract line items for:

(i) each line item;
(ii) delivery;
(iii) installation;
(iv) sets of operating manuals;
(v) training;
(vi) warranty;
(vii) maintenance; and
(viii) volume discounts.

7. 1552.215–74, is redesignated as 1552.215-73 and revised to read as follows:

**1552.215–73 General Financial and Organizational Information.**

As prescribed in 1515.408(a)(2), insert the following provision:

General Financial and Organizational Informaiton: (Aug 1999)

Offerors or quoters are requested to provide information regarding the following items in sufficient detail to allow a full and complete business evaluation. If the question indicated is not applicable or the answer is none, it should be annotated. If the offeror has previously submitted the information, it should certify the validity of that data currently on file at EPA and to whom and where it was submitted or update all outdated information on file.

(a) Contractor's Name: _____

(b) Address (If financial records are maintained at some other location, show the address of the place where the records are kept):

_____

_____

(c) Telephone Number: _____

(d) Individual(s) to contact re. this proposal: _____

_____

(e) Cognizant Government:

Audit Agency: _____
Address: _____
Auditor: _____

(f)(1) Work Distribution for the Last Completed Fiscal Accounting Period:

Sales:
Government cost-reimbursement type prime contracts and subcontracts ... $_____
Government fixed-price prime contracts and subcontracts ..... $_____
Commercial Sales ..... $_____
Total Sales ..... $_____

(2) Total Sales for first and second fiscal years immediately preceding last completed fiscal year.

Total Sales for First Preceding Fiscal Year ..... $_____
Total Sales for Second Preceding Fiscal Year ..... $_____

(g) Is company a separate rate entity or division?.

Yes_____
No_____

If a division or subsidiary corporation, name parent company:

_____

(h) Date Company Organized: _____

(i) Manpower:

Total Employees: _____
Direct: _____
Indirect: _____
Standard Work Week (Hours): _____

(j) Commercial Products: _____

(k) Attach a current organizational chart of the company.

(l) Description of Contractor's system of estimating and accumulating costs under Government contracts. (Check appropriate blocks.)

| | Estimated/ actual cost | Standard cost |
|---|---|---|
| Estimating System: | | |
| Job Order ..... | _____ | _____ |
| Process ..... | _____ | _____ |

| | Estimated/ actual cost | Standard cost |
|---|---|---|
| Accumulating System: | | |
| Job Order ..... | _____ | _____ |
| Process ..... | _____ | _____ |

Has your cost estimating system been approved by any Government agency?
Yes _____ No _____

If yes, give name, date or approval, and location of agency:

_____

_____

Has your cost accumulation system been approved by any Government agency?
Yes _____ No _____

If yes, give name, date of approval, and address of agency:

_____

_____

(m) What is your fiscal year period? (Give month-to-month dates):

_____

_____

What were the indirect cost rates for your last completed fiscal year?

| Fiscal year | Indirect cost rate | Basis of allocation |
|---|---|---|
| Fringe Benefits ..... | _____ | _____ |
| Overhead ..... | _____ | _____ |
| G&A Expense ..... | _____ | _____ |
| Other ..... | _____ | _____ |

(n) Have the proposed indirect cost rate(s) been evaluated and accepted by any Government agency?
Yes _____ No _____

If yes, give name, date of approval, and location of the Government agency:

_____

Date of last preaward audit review by a Government agency:

_____

If the answer is no, data supporting the proposed rates must accompany the cost or price proposal. A breakdown of the items comprising overhead and G&A must be furnished.

(o) Cost estimating is performed by:

Accounting Department _____
Contracting Department _____
Other (describe) _____

(p) Has system of control of Government property been approved by a Government agency?
Yes _____ No _____

If yes, give name, date of approval, and location of the Government agency:

_____

_____

(q) Purchasing System: FAR 44.302 requires EPA, where it is the cognizant Government agency, to conduct a Contractor Purchasing System Review for each contractor whose sales to the Government, using other than sealed bid procedures, are expected to exceed $25 million (annual billings) during the next twelve months. The $25 million sales threshold is comprised of prime contracts, subcontractors under Government prime contracts, and modifications (except when the negotiated price is based on established catalog or market prices or is set by law or regulation).

Has your purchasing system been approved by a Government agency?
Yes _____ No _____

If yes, name and location of the Government agency:

_____

Period of Approval: _____

If no, do you estimate that your negotiated sales to the Government during the next twelve months will meet the $25 million threshold? Yes _____ No _____

If you responded yes to the $25 million threshold question, is EPA the cognizant agency for your organization based on the preponderance of Government contract dollars?
Yes _____ No _____

If EPA is not your cognizant Government agency, provide the name and location of the cognizant agency _____

_____

Are your purchasing policies and procedures written?
Yes _____ No _____

(r) Does your firm have an established written incentive compensation or bonus plan?
Yes _____ No _____

(s) Additionally, offerors shall submit current financial statements, including a Balance Sheet, Statement of Income (Loss), and Cash Flow for the last two completed fiscal years. Specify resources available to perform the contract without assistance from any outside source. If sufficient resources are not available, indicate in proposal the amount required and the anticipated source (i.e., bank loans, letter or lines of credit, etc.).

(End of Provision)

8. A new 1552. 215–74 is added to read as follows:

**1552.215–74 Advanced Understanding—Uncompensated Time.**

As prescribed in 1515.408(b), insert the following provision or one substantially the same as the following provision:

Advanced Understanding—Uncompensated Time (Aug 1999)

(a) The estimated cost of this contract is based upon the Contractor's proposal which specified that exempt personnel identified to work at the Contractor's facilities will provide uncompensated labor hours to the contract totaling _____ percent of compensated labor. (Note: the commitment for uncompensated time, and the formula elements in paragraph (b) below, apply only to exempt personnel working at the Contractor's facilities and does not include non-exempt personnel or exempt personnel working at other facilities.) Uncompensated labor hours are defined as hours of exempt personnel in excess of regular hours for a _____ pay period which are actually worked and recorded in accordance with the company policy, entitled, _____.

(b) Recognizing that the probable cost to the Government for the labor provided under this contract is calculated assuming a proposed level of uncompensated labor hours, it is hereby agreed that in the event the proposed level of uncompensated labor hours are not provided, an adjustment, calculated in accordance with the following formula will be made to the contract amount.

Formula:

Adjustment equals estimated value of uncompensated time hours not provided.

Target uncompensated time percent minus _____ percent.

Shortage of uncompensated time percent minus actual cost percent.

Estimated value of uncompensated time hours not provided equals shortage of uncompensated time percent times total exempt applicable direct labor costs (including applicable indirect costs).

(c) Within three weeks after the end of the contract, the Contractor shall submit a statement concerning the amount of uncompensated time hours delivered during the contract. In the event there is a shortage of uncompensated time hours provided, a calculation, utilizing the above formula will be made and this calculation will be the basis for an adjustment in the contract amount.

(d) In the event adjustments are made to the contract, the adjusted amounts shall not be allowable as a direct or indirect cost to this or any other Government contract.

[End of clause]

Dated: August 6, 1999.

**Betty L. Bailey,**

*Director, Office of Acquisition Management.*

[FR Doc. 99–22048 Filed 8–30–99; 8:45 am]

BILLING CODE 6560–50–P

## DEPARTMENT OF THE INTERIOR

## Fish and Wildlife Service

## 50 CFR Part 20

**RIN 1018–AF24**

## Migratory Bird Hunting; Early Seasons and Bag and Possession Limits for Certain Migratory Game Birds in the Contiguous United States, Alaska, Hawaii, Puerto Rico, and the Virgin Islands

**AGENCY:** Fish and Wildlife Service, Interior.

**ACTION:** Final rule.

**SUMMARY:** This rule prescribes the hunting seasons, hours, areas, and daily bag and possession limits of mourning, white-winged, and white-tipped doves; band-tailed pigeons; rails; moorhens and gallinules; woodcock; common snipe; sandhill cranes; sea ducks; early (September) waterfowl seasons; migratory game birds in Alaska, Hawaii, Puerto Rico, and the Virgin Islands; and some extended falconry seasons. Taking of migratory birds is prohibited unless specifically provided for by annual regulations. This rule permits taking of designated species during the 1999–2000 season.

**DATES:** This rule is effective on September 1, 1999.

**FOR FURTHER INFORMATION CONTACT:** Jonathan Andrew, Chief, or Ron W. Kokel, Office of Migratory Bird Management, U.S. Fish and Wildlife Service, (703) 358–1714.

**SUPPLEMENTARY INFORMATION:**

## Regulations Schedule for 1999

On May 3, 1999, the U.S. Fish and Wildlife Service (hereinafter Service or we) published in the **Federal Register** (64 FR 23742) a proposal to amend 50 CFR part 20. The proposal dealt with the establishment of seasons, limits, and other regulations for migratory game birds under § 20.101 through 20.107, 20.109, and 20.110 of subpart K. On June 17, we published in the **Federal Register** (64 FR 32758) a second document providing supplemental proposals for early-and late-season migratory bird hunting regulations frameworks and the proposed regulatory alternatives for the 1999–2000 duck hunting season. The June 17 supplement also provided detailed information on the 1999–2000 regulatory schedule and announced the Service Migratory Bird Regulations Committee and Flyway Council meetings.

On June 22–23, we held meetings that reviewed information on the current status of migratory shore and upland game birds and developed 1999–2000 migratory game bird regulations recommendations for these species plus regulations for migratory game birds in Alaska, Puerto Rico, and the Virgin Islands; special September waterfowl seasons in designated States; special sea duck seasons in the Atlantic Flyway; and extended falconry seasons. In addition, we reviewed and discussed preliminary information on the status of waterfowl as it relates to the development and selection of the regulatory packages for the 1999–2000 regular waterfowl seasons. On July 22, we published in the **Federal Register** (64 FR 39460) a third document specifically dealing with the proposed frameworks for early-season regulations for the 1999–2000 duck hunting season.

On August 3–4, 1999, we held a public meeting in Washington, DC, as announced in the May 3, and June 17 **Federal Registers,** to review the status of waterfowl. Proposed hunting regulations were discussed for late seasons. On August 27, 1999, we published a fifth document on migratory bird hunting. The fifth document dealt specifically with proposed frameworks for the 1999–2000 late-season migratory bird hunting regulations. On August 27, 1999, we also published a sixth document on migratory bird hunting. The document contained final frameworks for early migratory bird hunting seasons from which wildlife conservation agency officials from the States, Puerto Rico, and the Virgin Islands selected early-season hunting dates, hours, areas, and limits.

The final rule described here is the seventh in the series of proposed, supplemental, and final rulemaking documents for migratory game bird hunting regulations and deals specifically with amending subpart K of 50 CFR 20. It sets hunting seasons, hours, areas, and limits for mourning, white-winged, and white-tipped doves; band-tailed pigeons; rails; moorhens and gallinules; woodcock; common snipe; sandhill cranes; sea ducks; early (September) waterfowl seasons; mourning doves in Hawaii; migratory game birds in Alaska, Puerto Rico, and the Virgin Islands; youth waterfowl hunting day; and some extended falconry seasons.

## NEPA Consideration

NEPA considerations are covered by the programmatic document, ''Final Supplemental Environmental Impact Statement: Issuance of Annual Regulations Permitting the Sport Hunting of Migratory Birds (FSES 88–14),'' filed with the Environmental Protection Agency on June 9, 1988. We published a Notice of Availability in the **Federal Register** on June 16, 1988 (53 FR 22582). We published our Record of Decision on August 18, 1988 (53 FR 31341). Copies are available from the address indicated under the caption **ADDRESSES**.

## Endangered Species Act Consideration

As in the past, we design hunting regulations to remove or alleviate chances of conflict between migratory game bird hunting seasons and the protection and conservation of endangered and threatened species. We conducted consultations to ensure that actions resulting from these regulatory proposals will not likely jeopardize the continued existence of endangered or threatened species or result in the destruction or adverse modification of their critical habitat. Findings from these consultations are included in a biological opinion and may have caused modification of some regulatory measures previously proposed. The final frameworks reflect any modifications. The biological opinions resulting from our Section 7 consultation are public documents available for public inspection in the Service's Division of Endangered Species and MBMO, at the address indicated under the caption **ADDRESSES**.

## Executive Order (E.O.) 12866

Collectively, the rules covering the overall frameworks for migratory bird hunting are economically significant and have been reviewed by the Office of Management and Budget (OMB) under E.O. 12866. This rule is a small portion of the overall migratory bird hunting frameworks and was not individually submitted and reviewed by OMB under E.O. 12866.

## Regulatory Flexibility Act

These regulations have a significant economic impact on substantial numbers of small entities under the Regulatory Flexibility Act (5 U.S.C. 601 *et seq.*). We analyzed the economic impacts of the annual hunting regulations on small business entities in detail and issued a Small Entity Flexibility Analysis (Analysis) in 1998. The Analysis documented the significant beneficial economic effect on a substantial number of small entities. The primary source of information about hunter expenditures for migratory game bird hunting is the National Hunting and Fishing Survey, which is conducted at 5-year intervals. The Analysis was based on the 1996 National Hunting and Fishing Survey and the U.S. Department of Commerce's County Business Patterns from which it was estimated that migratory bird hunters would spend between $429 and $1,084 million at small businesses in 1998. Copies of the Analysis are available upon request.

## Small Business Regulatory Enforcement Fairness Act

This rule is a major rule under 5 U.S.C. 804(2), the Small Business Regulatory Enforcement Fairness Act. For the reasons outlined above, this rule has an annual effect on the economy of $100 million or more. However, because this rule establishes hunting seasons, we do not plan to defer the effective date under the exemption contained in 5 U.S.C. 808(1) .

## Paperwork Reduction Act

We examined these regulations under the Paperwork Reduction Act of 1995. We utilize the various recordkeeping and reporting requirements imposed under regulations established in 50 CFR part 20, Subpart K, in the formulation of migratory game bird hunting regulations. Specifically, OMB has approved the information collection requirements of the Migratory Bird Harvest Information Program and assigned clearance number 1018–0015

(expires 9/30/2001). This information is used to provide a sampling frame for voluntary national surveys to improve our harvest estimates for all migratory game birds in order to better manage these populations. OMB has also approved the information collection requirements of the Sandhill Crane Harvest Questionnaire and assigned clearance number 1018–0023 (expires 9/30/2000). The information from this survey is used to estimate the magnitude, the geographical and temporal distribution of harvest, and the portion it constitutes of the total population. A Federal agency may not conduct or sponsor, and a person is not required to respond to, a collection of information unless it displays a currently valid OMB control number.

**Unfunded Mandates Reform Act**

We have determined and certify, in compliance with the requirements of the Unfunded Mandates Act, 2 U.S.C. 1502 *et seq.*, that this rulemaking will not impose a cost of $100 million or more in any given year on local or State government or private entities.

**Civil Justice Reform-Executive Order 12988**

The Department, in promulgating this rule, has determined that these regulations meet the applicable standards found in Sections 3(a) and 3(b)(2) of Executive Order 12988.

**Takings Implication Assessment**

In accordance with Executive Order 12630, this rule, authorized by the Migratory Bird Treaty Act, does not have significant takings implications and does not affect any constitutionally protected property rights. This rule will not result in the physical occupancy of property, the physical invasion of property, or the regulatory taking of any property. In fact, these rules allow hunters to exercise otherwise unavailable privileges; and, therefore, reduce restrictions on the use of private and public property.

**Federalism Effects (E.O. 12612)**

Due to the migratory nature of certain species of birds, the Federal government has been given responsibility over these species by the Migratory Bird Treaty Act. We annually prescribe frameworks from which the States make selections and employ guidelines to establish special regulations on Federal Indian reservations and ceded lands. This process preserves the ability of the States and Tribes to determine which seasons meet their individual needs. Any State or Tribe may be more restrictive than the Federal frameworks at any time. The frameworks are developed in a cooperative process with the States and the Flyway Councils. This allows States to participate in the development of frameworks from which they will make selections, thereby having an influence on their own regulations. These rules do not have a substantial direct effect on fiscal capacity, change the roles or responsibilities of Federal or State governments, or intrude on State policy or administration. Therefore, in accordance with E.O. 12612, these regulations do not have significant federalism effects and do not have sufficient federalism implications to warrant a Federalism Assessment.

**Government-to-Government Relationship With Tribes**

In accordance with the President's memorandum of April 29, 1994, ''Government-to-Government Relations with Native American tribal Governments'' (59 FR 22951) and 512 DM 2, we have evaluated possible effects on Federally recognized Indian tribes and have determined that there are no effects.

**Regulations Promulgation**

The rulemaking process for migratory game bird hunting must, by its nature, operate under severe time constraints. However, we intend that the public be given the greatest possible opportunity to comment on the regulations. Thus, when the preliminary proposed rulemaking was published, we established what we believed were the longest periods possible for public comment. In doing this, we recognized that when the comment period closed, time would be of the essence. That is, if there were a delay in the effective date of these regulations after this final rulemaking, the States would have insufficient time to implement their selected season dates and limits and start their seasons in a timely manner.

We therefore find that ''good cause'' exists, within the terms of 5 U.S.C. 553(d)(3) of the Administrative Procedure Act, and these regulations will, therefore, take effect immediately upon publication. Accordingly, with each conservation agency having had an opportunity to participate in selecting the hunting seasons desired for its State or Territory on those species of migratory birds for which open seasons are now prescribed, and consideration having been given to all other relevant matters presented, certain sections of title 50, chapter I, subchapter B, part 20, subpart K, are hereby amended as set forth below.

**List of Subjects in 50 CFR Part 20**

Exports, Hunting, Imports, Reporting and recordkeeping requirements, Transportation, Wildlife.

Dated: August 24, 1999.

**Donald J. Barry,**

*Assistant Secretary for Fish and Wildlife and Parks.*

## PART 20—[AMENDED]

For the reasons set out in the preamble, title 50, chapter I, subchapter B, Part 20, subpart K of the Code of Federal Regulations is amended as follows:

1. The authority citation for Part 20 continues to read as follows:

**Authority:** 16 U.S.C. 703–712 and 16 U.S.C. 742a–j.

BILLING CODE 4310–55–P

**Note - The following annual hunting regulations provided for by §§20.101 through 20.106 and 20.109 of 50 CFR 20 will not appear in the Code of Federal Regulations because of their seasonal nature.**

2. Section 20.101 is revised to read as follows:

**§20.101 Seasons, limits, and shooting hours for Puerto Rico and the Virgin Islands**

Subject to the applicable provisions of the preceding sections of this part, areas open to hunting, respective open seasons (dates inclusive), shooting and hawking hours, and daily bag and possession limits for the species designated in this section are prescribed as follows:

Shooting and hawking hours are one-half hour before sunrise until sunset.

CHECK COMMONWEALTH REGULATIONS FOR AREA DESCRIPTIONS AND ANY ADDITIONAL RESTRICTIONS.

(a) Puerto Rico

| | Season Dates | Limits Bag | Limits Possession |
|---|---|---|---|
| Doves and Pigeons | | | |
| Zenaida, white-winged, and mourning doves | Sept. 4-Nov. 1 | 10 | 10 |
| Scaly-naped pigeons | Sept. 4-Nov. 1 | 5 | 5 |
| Ducks | Nov. 13-Dec. 20 & | 6 | 12 |
| | Jan. 15-Jan. 31 | 6 | 12 |
| Common Moorhens | Nov. 13-Dec. 20 & | 6 | 12 |
| | Jan. 15-Jan. 31 | 6 | 12 |
| Common Snipe | Nov. 13-Dec. 20 & | 8 | 16 |
| | Jan. 15-Jan. 31 | 8 | 16 |

**Restrictions:** In Puerto Rico, the season is closed on the ruddy duck, white-cheeked pintail, West Indian whistling duck, fulvous whistling duck, masked duck, purple gallinule, American coot, and Caribbean coot, white-crowned pigeon and plain pigeon.

**Closed Areas:** Closed areas are described in the August 27, 1999, Federal Register.

(b) Virgin Islands

| | Season Dates | Limits Bag | Limits Possession |
|---|---|---|---|
| Zenaida doves | Sept. 1-Sept. 30 | 10 | 10 |
| Ducks | CLOSED | | |

**Restrictions:** In the Virgin Islands, the seasons are closed for ground or quail doves, pigeons, ruddy duck, white-cheeked pintail, West Indian whistling duck, fulvous whistling duck, masked duck, and purple gallinule.

**Closed Areas:** Ruth Cay, just south of St. Croix, is closed to the hunting of migratory game birds.

3. Section 20.102 is revised to read as follows:

**§20.102 Seasons, limits, and shooting hours for Alaska.**

Subject to the applicable provisions of the preceding sections of this part, areas open to hunting, respective open seasons (dates inclusive), shooting and hawking hours, and daily bag and possession limits for the species designated in this section are prescribed as follows:

Shooting and hawking hours are one-half hour before sunrise until sunset. Area descriptions were published in the August 27, 1999, Federal Register.

CHECK STATE REGULATIONS FOR AREA DESCRIPTIONS AND ANY ADDITIONAL RESTRICTIONS.

| Area Seasons | Dates |
|---|---|
| North Zone | Sept. 1-Dec. 16 |
| Gulf Coast Zone | Sept. 1-Dec. 16 |
| Southeast Zone | Sept. 1-Dec. 16 |
| Pribilof & Aleutian Islands Zone | Oct. 8-Jan. 22 |
| Kodiak Zone | Oct. 8-Jan. 22 |

Daily Bag and Possession Limits

| Area | Ducks(1) | Dark Geese(2)(3) | Light Geese (2) | Brant | Common Snipe | Sandhill Cranes(4) |
|---|---|---|---|---|---|---|
| North Zone | 10-30 | 4-8 | 3-6 | 2-4 | 8-16 | 3-6 |
| Gulf Coast Zone | 8-24 | 4-8 | 3-6 | 2-4 | 8-16 | 2-4 |
| Southeast Zone | 7-21 | 4-8 | 3-6 | 2-4 | 8-16 | 2-4 |
| Pribilof and Aleutian Islands Zone | 7-21 | 4-8 | 3-6 | 2-4 | 8-16 | 2-4 |
| Kodiak Zone | 7-21 | 4-8 | 3-6 | 2-4 | 8-16 | 2-4 |

(1) In State Game Management Units (Units) 1-26 (Statewide), the basic bag limits may include not more than 1 canvasback daily, 3 in possession. In addition to the basic daily bag and possession limits, a daily bag limit of 10 and a possession limit of 20 is permitted singly or in the aggregate of the following species: scoter, king and common eider, and common and red-breasted mergansers. The season is closed for Steller's and spectacled eiders.

(2) Dark geese include Canada and white-fronted geese. Light geese include snow geese and Ross' geese. Separate limits apply to brant and emperor geese. The season for Aleutian Canada geese and emperor geese is closed Statewide.

(3) In Units 5 and 6, the taking of Canada geese is only permitted from September 28 through December 16. In Units 1-26 (Statewide), the taking of Aleutian Canada geese and emperor geese is prohibited. In Unit 9(d) and the Unimak Island portion of Unit 10, the limits for dark geese are 6 daily and 12 in possession. In the Middleton Island portion of Unit 6, the taking of Canada geese is by special permit only, with a daily bag and possession limit of 1.

(4) In Unit 17, the daily bag limit for sandhill cranes is 2 and the possession limit is 4.

**Falconry:** The total combined bag and possession limit for migratory game birds taken with the use of a falcon under a falconry permit is 3 per day, 6 in possession, and may not exceed a more restrictive limit for any species listed in this subsection.

**Special Tundra Swan Season:** In Unit 22 and 18, there will be a tundra swan season from September 1 through October 31 with a season limit of 3 tundra swans per hunter. This season is by registration permit only; hunters will be issued 1 permit allowing the take of up to 3 tundra swans. Hunters will be required to file a harvest report after the season is completed. Up to 300 permits may be issued in Unit 22 and 500 permits in Unit 18. In Unit 23, there will be an experimental tundra swan season from September 1 through October 31, with a season limit of 3 tundra swans per hunter. This season is by registration permit only; hunters will be issued 1 permit allowing the take of up to 3 tundra swans. Hunters will be required to file a harvest report after the season is completed. Up to 300 permits may be issued. Season evaluation to adhere to guidelines for experimental seasons as described in the Pacific Flyway Management Plan for the Western Population of (Tundra) swans.

4. Section 20.103 is revised to read as follows:

**§20.103 Seasons, limits, and shooting hours for doves and pigeons.**

Subject to the applicable provisions of the preceding sections of this part, areas open to hunting, respective open seasons (dates inclusive), shooting and hawking hours, and daily bag and possession limits for the species designated in this section are prescribed as follows:

Shooting and hawking hours are one-half hour before sunrise until sunset except as otherwise noted. Area descriptions were published in the August 27, 1999, Federal Register.

CHECK STATE REGULATIONS FOR AREA DESCRIPTIONS AND ANY ADDITIONAL RESTRICTIONS.

(a) Doves

Note: Unless otherwise specified, the seasons listed below are for mourning doves only.

| | Season Dates | Limits Bag | Limits Possession |
|---|---|---|---|
| EASTERN MANAGEMENT UNIT | | | |
| Alabama | | | |
| North Zone | | | |
| 12 noon to sunset | Sept. 11 only & | 15 | 15 |
| | Dec. 25-Jan. 4 | 15 | 15 |
| 1/2 hour before sunrise to sunset | Sept. 12-Oct. 24 | 15 | 15 |
| South Zone | | | |
| 12 noon to sunset | Oct. 2-Nov. 20 & | 12 | 12 |
| | Dec. 25-Jan. 13 | 12 | 12 |
| Delaware | | | |
| 12 noon to sunset | Sept. 4-Sept. 25 | 12 | 24 |
| 1/2 hour before sunrise to sunset | Oct. 18-Oct. 30 & | 12 | 24 |
| | Dec. 6-Jan. 8 | 12 | 24 |
| Florida (1) | | | |
| 12 noon to sunset | Oct. 2-Oct. 25 | 12 | 24 |
| 1/2 hour before sunrise to sunset | Nov. 13-Nov. 28 & | 12 | 24 |
| | Dec. 11-Jan. 9 | 12 | 24 |

| | Season Dates | Limits Bag | Limits Possession |
|---|---|---|---|
| Georgia | | | |
| Zone 1 | | | |
| 12 noon to sunset | Sept. 4 only | 12 | 24 |
| 1/2 hour before sunrise to sunset | Sept. 5-Oct. 3 & | 12 | 24 |
| | Nov. 25-Nov. 27 & | 12 | 24 |
| | Dec. 10-Jan. 15 | 12 | 24 |
| Zone 2 | | | |
| 12 noon to sunset | Sept. 25 only | 12 | 24 |
| 1/2 hour before sunrise to sunset | Sept. 26-Oct. 24 & | 12 | 24 |
| | Nov. 25-Nov. 27 & | 12 | 24 |
| | Dec. 10-Jan. 15 | 12 | 24 |
| Illinois | | | |
| sunrise to sunset | Sept. 1-Oct. 17 & | 15 | 30 |
| | Nov. 6-Nov. 18 | 15 | 30 |
| Indiana | Sept. 1-Oct. 16 & | 15 | 30 |
| | Nov. 5-Nov. 14 & | 15 | 30 |
| | Nov. 25-Nov. 28 | 15 | 30 |
| Kentucky | | | |
| 11 a.m. to sunset | Sept. 1-Oct. 24 | 15 | 30 |
| 1/2 hour before sunrise to sunset | Nov. 25-Nov. 30 | 15 | 30 |
| Louisiana | | | |
| 12 noon to sunset | Sept. 4-Sept. 5 & | 12 | 24 |
| | Oct. 16-Oct. 17 & | 12 | 24 |
| | Dec. 11-Dec. 12 | 12 | 24 |
| 1/2 hour before sunrise to sunset | Sept. 6-Sept. 12 & | 12 | 24 |
| | Oct. 18-Nov. 15 & | 12 | 24 |
| | Dec. 13-Jan. 9 | 12 | 24 |
| Maryland | | | |
| 12 noon to sunset | Sept. 1-Oct. 21 | 12 | 24 |
| 1/2 hour before sunrise to sunset | Nov. 15-Nov. 20 & | 12 | 24 |
| | Dec. 20-Jan. 1 | 12 | 24 |

| | Season Dates | Limits Bag | Limits Possession |
|---|---|---|---|
| Mississippi | | | |
| North Zone | Sept. 4-Sept. 25 & | 15 | 30 |
| | Oct. 9-Nov. 7 & | 15 | 30 |
| | Dec. 25-Jan. 1 | 15 | 30 |
| South Zone | Sept. 25-Oct. 16 & | 15 | 30 |
| | Nov. 13-Nov. 28 & | 15 | 30 |
| | Dec. 18-Jan. 8 | 15 | 30 |
| North Carolina | | | |
| 12 noon to sunset | Sept. 4-Sept. 10 | 12 | 24 |
| 1/2 hour before sunrise to sunset | Sept. 11-Oct. 9 & | 12 | 24 |
| | Nov. 22-Nov. 27 & | | |
| | Dec. 20-Jan. 15 | 12 | 24 |
| Ohio | Sept. 1-Oct. 16 & | 12 | 24 |
| | Nov. 5-Nov. 28 | 12 | 24 |
| Pennsylvania | | | |
| 12 noon to sunset | Sept. 1-Oct. 6 & | 12 | 24 |
| | Oct. 30-Nov. 27 & | 12 | 24 |
| | Dec. 27-Jan. 1 | 12 | 24 |
| Rhode Island | | | |
| 12 noon to sunset | Sept. 11-Oct. 3 | 12 | 24 |
| 1/2 hour before sunrise to sunset | Oct. 16-Dec. 1 | 12 | 24 |
| South Carolina | | | |
| 12 noon to sunset | Sept. 4-Sept. 6 | 12 | 24 |
| 1/2 hour before sunrise to sunset | Sept. 7-Oct. 9 & | 12 | 24 |
| | Nov. 20-Nov. 27 & | 12 | 24 |
| | Dec. 21-Jan. 15 | 12 | 24 |
| Tennessee | | | |
| 12 noon to sunset | Sept. 1 only | 15 | 30 |
| 1/2 hour before sunrise to sunset | Sept. 2-Sept. 26 & | 15 | 30 |
| | Oct. 9-Oct. 24 & | 15 | 30 |
| | Dec. 18-Jan. 4 | 15 | 30 |
| Virginia | | | |
| 12 noon to sunset | Sept. 4-Sept. 25 | 12 | 24 |
| 1/2 hour before sunrise to sunset | Oct. 2-Nov. 6 & | 12 | 24 |
| | Dec. 25-Jan. 5 | 12 | 24 |

| | Season Dates | Limits Bag | Limits Possession |
|---|---|---|---|
| West Virginia | | | |
| 12 noon to sunset | Sept. 1 only | 12 | 24 |
| 1/2 hour before sunrise to sunset | Sept. 2-Oct. 2 & | 12 | 24 |
| | Oct. 25-Nov. 6 & | 12 | 24 |
| | Dec. 15-Jan. 8 | 12 | 24 |
| CENTRAL MANAGEMENT UNIT | | | |
| Arkansas | Sept. 4-Sept. 26 & | 15 | 30 |
| | Oct. 9-Oct. 31 & | 15 | 30 |
| | Dec. 18-Dec. 31 | 15 | 30 |
| Colorado | Sept. 1-Oct. 30 | 15 | 30 |
| Kansas | Sept. 1-Oct. 30 | 15 | 30 |
| Missouri | Sept. 1-Sept. 30 & | 15 | 30 |
| | Nov. 1-Nov. 30 | 15 | 30 |
| Montana | Sept. 1-Oct. 30 | 15 | 30 |
| Nebraska | Sept. 1-Oct. 30 | 15 | 30 |
| New Mexico (2) | | | |
| North Zone | Sept. 1-Oct. 30 | 15 | 30 |
| South Zone | Sept. 1-Sept. 30 & | 15 | 30 |
| | Dec. 1-Dec. 30 | 15 | 30 |
| North Dakota | Sept. 1-Oct. 30 | 15 | 30 |
| Oklahoma | Sept. 1-Oct. 30 | 15 | 30 |
| South Dakota (3) | Sept. 1-Oct. 15 | 15 | 30 |
| Texas (4) | | | |
| North Zone | Sept. 1-Oct. 30 | 15 | 30 |
| Central Zone | Sept. 1-Oct. 17 & | 15 | 30 |
| | Dec. 26-Jan. 7 | 15 | 30 |
| South Zone | | | |
| Special Area | Sept. 24-Nov. 7 & | 15 | 30 |
| | Dec. 26-Jan. 5 | 15 | 30 |
| (Special Season) 12 noon to sunset | Sept. 4-Sept. 5 & | 10 | 20 |
| | Sept. 11-Sept. 12 | 10 | 20 |
| Texas (cont) | | | |
| Remainder of the South Zone | Sept. 24-Nov. 7 & | 15 | 30 |
| | Dec. 26-Jan. 9 | 15 | 30 |
| Wyoming | Sept. 1-Oct. 30 | 15 | 30 |
| WESTERN MANAGEMENT UNIT | | | |
| Arizona (5) | Sept. 1-Sept. 15 & | 10 | 20 |
| | Nov. 20-Jan. 3 | 10 | 20 |
| California (6) | Sept. 1-Sept. 15 & | 10 | 20 |
| | Nov. 13-Dec. 27 | 10 | 20 |
| Idaho | Sept. 1-Sept. 30 | 10 | 20 |
| Nevada (6) | Sept. 1-Sept. 30 | 10 | 20 |
| Oregon | Sept. 1-Sept. 30 | 10 | 20 |
| Utah | Sept. 1-Sept. 30 | 10 | 20 |
| Washington | Sept. 1-Sept. 15 | 10 | 20 |
| OTHER POPULATIONS | | | |
| Hawaii (7) | Nov. 6-Nov. 28 & | 10 | 10 |
| | Dec. 4-Dec. 31 & | 10 | 10 |
| | Jan. 1-Jan. 17 | 10 | 10 |

(1) In Florida, the daily bag limit is 12 mourning and white-winged doves in the aggregate, of which not more than 4 may be white-winged doves. The possession limit is twice the daily bag limit.

(2) In New Mexico, the daily bag limit is 15 and the possession limit is 30 mourning and white-winged doves in the aggregate.

(3) In South Dakota, shooting hours are from sunrise to sunset.

(4) In Texas, the daily bag limit is 15 mourning, white-winged, and white-tipped doves in the aggregate, of which no more than 2 may be white-tipped doves. Possession limits are twice the daily bag limit. During the special season in the Special White-winged Dove Area of the South Zone, the daily bag limit is 10 mourning, white-winged, and white-tipped doves in the aggregate, of which no more than 5 may be mourning doves and 2 may be white-tipped doves. Possession limits are twice the daily bag limit.

(5) In Arizona, during September 1 through 10, the daily bag limit is 10 mourning and white-winged doves in the aggregate, of which no more than 6 may be white-winged doves. During November 20 through January 3, the daily bag limit is 10 mourning doves. The possession limit is twice the daily bag limit. See State regulations for restrictive shooting hours in certain areas.

(6) In the areas of California and Nevada open to white-winged dove hunting, the daily bag limit is 10 and the possession limit is 20 mourning and white-winged doves in the aggregate.

(7) In Hawaii, the season is only open on the island of Hawaii. The daily bag and possession limits are 10 mourning and lace-necked doves in the aggregate. Shooting hours are from one-half hour before sunrise through one-half hour after sunset. Hunting is only permitted on weekends and State holidays.

(b) Band-tailed Pigeons

| | Season Dates | Limits Bag | Limits Possession |
|---|---|---|---|
| Arizona | Oct. 1-Oct. 8 | 4 | 8 |
| California | | | |
| North Zone | Sept. 18-Sept. 26 | 2 | 2 |
| South Zone | Dec. 18-Dec. 26 | 2 | 2 |
| Colorado | Sept. 1-Sept. 30 | 5 | 10 |
| New Mexico | | | |
| North Zone | Sept. 1-Sept. 20 | 5 | 10 |
| South Zone | Oct. 1-Oct. 20 | 5 | 10 |
| Oregon | Sept. 15-Sept. 23 | 2 | 2 |
| Utah | Sept. 1-Sept. 30 | 5 | 10 |

5. Section 20.104 is revised to read as follows:

**§20.104 Seasons, limits, and shooting hours for rails, woodcock, and common snipe.**

Subject to the applicable provisions of the preceding sections of this part, areas open to hunting, respective open seasons (dates inclusive), shooting and hawking hours, and daily bag and possession limits for the species designated in this section are prescribed as follows:

Shooting and hawking hours are one-half hour before sunrise until sunset except as otherwise noted. Area descriptions were published in the August 27, 1999, Federal Register.

CHECK STATE REGULATIONS FOR AREA DESCRIPTIONS AND ANY ADDITIONAL RESTRICTIONS.

Note: States with deferred seasons may select those seasons at the same time they select waterfowl seasons in August. Consult late-season regulations for further information.

| | Sora and Virginia Rails | Clapper and King Rails | Woodcock | Common Snipe |
|---|---|---|---|---|
| Daily bag limit | 25 (1) | 15 (2) | 3 | 8 |
| Possession limit | 25 (1) | 30 (2) | 6 | 16 |
| ATLANTIC FLYWAY | | | | |
| Connecticut (3) | Sept. 1-Nov. 6 | Sept. 1-Nov. 6 | Oct. 30-Nov. 27 | Oct. 30-Nov. 27 |
| Delaware | Sept. 1-Nov. 9 | Sept. 1-Nov. 9 | Oct. 18-Oct. 30 & Nov. 22-Dec. 8 | Oct. 18-Oct.30 & Nov. 22-Jan.31 |
| Florida | Sept. 1-Nov. 9 | Sept. 1-Nov. 9 | Dec. 18-Jan. 16 | Nov. 1-Feb. 15 |
| Georgia | Sept. 25-Dec. 3 | Sept. 25-Dec. 3 | Dec. 24-Jan. 22 | Nov. 15-Feb. 28 |
| Maine | Sept. 1-Nov. 9 | Closed | Oct. 6-Nov. 4 | Sept. 1-Dec. 16 |
| Maryland | Sept. 1-Nov. 9 | Sept. 1-Nov. 9 | Oct. 25-Nov. 13 & Jan. 10-Jan. 19 | Sept. 13-Nov. 20 & Dec. 13-Jan. 19 |
| Massachusetts (4) | Sept. 1-Nov. 9 | Closed | Deferred | Sept. 1-Dec. 16 |
| New Hampshire | Closed | Closed | Oct. 6-Nov. 4 | Sept. 15-Nov. 4 |
| New Jersey (5) | | | | |
| North Zone | Sept. 1-Nov. 6 | Sept. 1-Nov. 6 | Oct. 19-Nov. 11 | Sept. 24-Jan. 8 |
| South Zone | Sept. 1-Nov. 6 | Sept. 1-Nov. 6 | Nov. 13-Nov. 27 & Dec. 17-Dec. 25 | Sept. 24-Jan. 8 |
| New York (6) | Sept. 1-Nov. 9 | Closed | Oct. 6-Nov. 4 | Sept. 1-Dec. 16 |
| North Carolina | Sept. 4-Nov. 12 | Sept. 4-Nov. 12 | Dec. 17-Jan. 15 | Nov. 15-Feb. 28 |
| Pennsylvania | Sept. 1-Nov. 9 | Closed | Oct. 23-Nov. 6 | Oct. 23-Nov. 27 |
| Rhode Island (7) | Sept. 11-Nov. 19 | Sept. 11-Nov. 19 | Nov. 5-Dec. 3 | Sept. 11-Dec. 3 |
| South Carolina | Sept. 25-Sept. 30 & Oct. 23-Dec. 25 | Sept. 25-Sept. 30 & Oct. 23-Dec. 25 | Dec. 31-Jan. 29 | Nov. 12-Feb. 26 |
| Vermont | Deferred | Deferred | Deferred | Deferred |
| Virginia | Sept. 10-Oct. 12 & Oct. 22-Nov. 27 | Sept. 10-Oct. 12 & Oct. 22-Nov. 27 | Oct. 30-Nov. 13 & Dec. 18-Jan. 1 | Oct. 6-Oct. 9 & Oct. 21-Jan. 31 |

| | Sora and Virginia Rails | Clapper and King Rails | Woodcock | Common Snipe |
|---|---|---|---|---|
| West Virginia | Sept. 1-Nov. 9 | Closed | Oct. 18-Nov. 16 | Sept. 1-Dec. 16 |
| MISSISSIPPI FLYWAY | | | | |
| Alabama (8) | Sept. 4-Sept. 19 & Nov. 28-Jan. 20 | Sept. 4-Sept. 19 & Nov. 28-Jan. 20 | Dec. 18-Jan. 31 | Nov. 14-Feb. 28 |
| Arkansas | Sept. 1-Nov. 9 | Closed | Nov. 13-Dec. 12 & Jan. 1-Jan. 15 | Nov. 6-Feb. 20 |
| Illinois (9) | Sept. 4-Nov. 12 | Closed | Oct. 16-Nov. 29 | Sept. 4-Dec. 19 |
| Indiana (10) | Sept. 1-Nov. 9 | Closed | Oct. 8-Nov. 21 | Sept. 1-Dec. 16 |
| Iowa (11) | Sept. 4-Nov. 12 | Closed | Oct. 2-Nov. 15 | Sept. 4-Nov. 30 |
| Kentucky | Sept. 1-Nov. 9 | Closed | Oct. 23-Dec. 6 | Sept. 15-Oct. 31 & Nov. 25-Jan. 23 |
| Louisiana (12) | Sept. 11-Sept. 26 | Sept. 11-Sept. 26 | Dec. 18-Jan. 31 | Nov. 6-Feb. 20 |
| Michigan (13) | Sept. 15-Nov. 14 | Closed | Sept. 25-Nov. 8 | Sept. 15-Nov. 14 |
| Minnesota | Sept. 1-Nov. 4 | Closed | Sept. 25-Nov. 8 | Sept. 1-Nov. 4 |
| Mississippi | Oct. 12-Dec. 20 | Oct. 12-Dec. 20 | Dec. 18-Jan. 31 | Nov. 13-Feb. 27 |
| Missouri | Sept. 1-Nov. 9 | Closed | Oct. 15-Nov. 28 | Sept. 1-Dec. 16 |
| Ohio | Sept. 1-Nov. 9 | Closed | Oct. 15-Nov. 28 | Sept. 1-Nov. 28 & Dec. 11-Dec. 28 |
| Tennessee | Deferred | Closed | Oct. 30-Dec. 13 | Nov. 14-Feb. 28 |
| Wisconsin | Deferred | Closed | Sept. 25-Nov. 8 | Deferred |
| CENTRAL FLYWAY | | | | |
| Colorado | Sept. 1-Nov. 9 | Closed | Closed | Sept. 1-Dec. 16 |
| Kansas | Sept. 1-Nov. 9 | Closed | Oct. 15-Nov. 28 | Sept. 1-Dec. 16 |
| Montana | Closed | Closed | Closed | Sept. 1-Dec. 16 |
| Nebraska (14) | Sept. 1-Nov. 9 | Closed | Sept. 25-Nov. 1 | Sept. 1-Dec. 16 |
| New Mexico | Oct. 9-Dec. 17 | Closed | Closed | Oct. 9-Jan. 23 |
| North Dakota | Closed | Closed | Sept. 18-Oct. 31 | Sept. 18-Nov. 28 |
| Oklahoma | Sept. 1-Nov. 9 | Closed | Nov. 1-Dec. 15 | Oct. 1-Jan. 15 |
| South Dakota (15) | Closed | Closed | Closed | Sept. 1-Oct. 31 |
| Texas | Sept. 11-Sept. 26 & Oct. 23-Dec. 15 | Sept. 11-Sept. 26 & Oct. 23-Dec. 15 | Dec. 18-Jan. 31 | Oct. 17-Jan. 31 |
| Wyoming | Sept. 1-Nov. 4 | Closed | Closed | Sept. 1-Dec. 2 |
| PACIFIC FLYWAY | | | | |
| Colorado | Sept. 1-Nov. 9 | Closed | Closed | Sept. 1-Dec. 16 |
| Idaho | Closed | Closed | Closed | Oct. 2-Jan. 15 |
| Montana | Closed | Closed | Closed | Sept. 1-Dec. 16 |
| New Mexico | Oct. 9-Dec. 17 | Closed | Closed | Oct. 9-Jan. 23 |
| Wyoming | Sept. 1-Nov. 4 | Closed | Closed | Sept. 1-Dec. 2 |

NOTE: For all other States in the Pacific Flyway, snipe seasons have been deferred and no seasons are prescribed for woodcock and rails.

(1) The bag and possession limits for sora and Virginia rails apply singly or in the aggregate of these species.

(2) All bag and possession limits for clapper and king rails apply singly or in the aggregate of the two species and, unless otherwise specified, the limits are in addition to the limits on sora and Virginia rails in all States. In Connecticut, Delaware, Maryland, and New Jersey, the limits for clapper and king rails are 10 daily and 20 in possession.

(3) In Connecticut, the daily bag and possession limits may not contain more than 1 king rail. The common snipe daily bag and possession limit is 3 and 6, respectively.

(4) In Massachusetts, the sora bag limit is 5 daily and 10 in possession; the Virginia rail bag limit is 10 daily and 20 in possession.

(5) In New Jersey, the season for king rails is closed by State regulation.

(6) In New York, seasons for sora and Virginia rails and common snipe are closed on Long Island.

(7) In Rhode Island, the sora and Virginia rails bag limit is 5 daily and 10 in possession, singly or in the aggregate; the clapper and king rail bag limit is 5 daily and 10 in possession, singly or in the aggregate; the common snipe bag limit is 5 daily and 10 in possession.

(8) In Alabama, the rail limits are 15 daily and 15 in possession, singly or in the aggregate.

(9) In Illinois, shooting hours are from sunrise to sunset.

(10) In Indiana, the sora rail limit is 25 daily and 25 in possession. The season on Virginia rails is closed.

(11) In Iowa, the limits for sora and Virginia rails are 12 daily and 24 in possession.

(12) Additional days occurring after September 30 will be published with the late season selections.

(13) In Michigan, the season opens concurrently with the duck season in certain areas.

(14) In Nebraska, the rail limits are 10 daily and 20 in possession.

(15) In South Dakota, the snipe limits are 5 daily and 15 in possession.

6. Section 20.105 is amended by revising paragraphs (a) through (f) to read as follows:

**§20.105 Seasons, limits, and shooting hours for waterfowl, coots, and gallinules.**

Subject to the applicable provisions of the preceding sections of this part, areas open to hunting, respective open seasons (dates inclusive), shooting and hawking hours, and daily bag and possession limits for the species designated in this section are prescribed as follows:

Shooting and hawking hours are one-half hour before sunrise until sunset, except as otherwise noted. Area descriptions were published in the August 27, 1999, Federal Register.

CHECK STATE REGULATIONS FOR AREA DESCRIPTIONS AND ANY ADDITIONAL RESTRICTIONS.

Note: States with deferred seasons may select those seasons at the same time they select waterfowl seasons in August. Consult late-seasons regulations for further information.

(a) Common Moorhens and Purple Gallinules

| | Season Dates | Limits Bag | Limits Possession |
|---|---|---|---|
| ATLANTIC FLYWAY | | | |
| Delaware | Sept. 1-Nov. 9 | 15 | 30 |
| Florida (1) | Sept. 1-Nov.9 | 15 | 30 |
| Georgia | Nov. 20-Jan. 20 | 15 | 30 |
| Maine | Sept. 1-Nov. 9 | 15 | 30 |
| New Jersey | Sept. 1-Nov. 6 | 10 | 20 |
| New York | | | |
| Long Island | Closed | -- | -- |
| Remainder of State | Sept. 1-Nov. 9 | 15 | 30 |
| North Carolina | Sept. 4-Nov. 12 | 15 | 30 |
| Pennsylvania | Sept. 1-Nov. 9 | 15 | 30 |
| South Carolina | Sept. 25-Sept. 30 & | 15 | 30 |
| | Oct. 23-Dec. 25 | 15 | 30 |
| Virginia | Deferred | -- | -- |
| West Virginia | Deferred | -- | -- |
| MISSISSIPPI FLYWAY | | | |
| Alabama | Sept. 4-Sept. 19 & | 15 | 15 |
| | Nov. 28-Jan. 20 | 15 | 15 |
| Arkansas | Sept. 1-Nov. 9 | 15 | 30 |
| Indiana | Sept. 1-Nov. 9 | 15 | 30 |
| Kentucky | Sept. 1-Nov. 9 | 15 | 30 |
| Louisiana (2) | Sept. 11-Sept. 26 | 15 | 30 |
| Michigan | Deferred | -- | -- |
| Minnesota | Deferred | -- | -- |
| Mississippi | Oct. 12-Dec. 20 | 15 | 30 |
| Ohio | Sept. 1-Nov. 9 | 15 | 30 |
| Tennessee | Deferred | -- | -- |
| Wisconsin | Deferred | -- | -- |

| | Season Dates | Limits Bag | Possession |
|---|---|---|---|
| CENTRAL FLYWAY | | | |
| New Mexico | | | |
| Zone 1 | Oct. 9-Dec. 17 | 1 | 2 |
| Zone 2 | Oct. 9-Dec. 17 | 1 | 2 |
| Oklahoma | Sept. 1-Nov. 9 | 15 | 30 |
| Texas | Sept. 11-Sept. 26 & | 15 | 30 |
| | Oct. 23-Dec. 15 | 15 | 30 |
| Wyoming | Deferred | -- | -- |
| PACIFIC FLYWAY | | | |
| All States | Deferred | -- | -- |

(1) The season applies to common moorhens only.

(2) Additional days occurring after September 30 will be published with the late season selections.

(b) Sea Ducks (scoter, eider, and oldsquaw ducks in Atlantic Flyway).

Within the special sea duck areas, the daily bag limit is 7 scoter, eider, and oldsquaw ducks, singly or in the aggregate, of which no more than 4 may be scoters. Possession limits are twice the daily bag limit. These limits may be in addition to regular duck bag limits only during the regular duck season in the special sea duck hunting areas.

| | Season Dates | Limits Bag | Possession |
|---|---|---|---|
| Connecticut | Sept. 18-Jan. 20 | 7 | 14 |
| Delaware | Sept. 18-Jan. 20 | 7 | 14 |
| Georgia | Nov. 20-Jan.18 | 7 | 14 |
| Maine | Deferred | -- | -- |
| Maryland | Deferred | -- | -- |
| Massachusetts | Deferred | -- | -- |
| New Hampshire | Sept. 15-Dec. 30 | 7 | 14 |
| New Jersey | Sept. 18-Jan. 20 | 7 | 14 |
| New York | Oct. 6-Jan. 20 | 7 | 14 |
| North Carolina | Deferred | -- | -- |
| Rhode Island | Oct. 8-Jan. 20 | 7 | 14 |
| South Carolina | Deferred | -- | -- |
| Virginia | Deferred | -- | -- |

NOTE: Notwithstanding the provisions of this Part 20, the shooting of crippled waterfowl from a motorboat under power will be permitted in Maine, Massachusetts, New Hampshire, Rhode Island, Connecticut, New York, Delaware, Virginia and Maryland in those areas described, delineated, and designated in their respective hunting regulations as special sea duck hunting areas.

(c) Early (September) Duck Seasons.

Note: Unless otherwise specified, the seasons listed below are for teal only.

| | Season Dates | Limits Bag | Possession |
|---|---|---|---|
| ATLANTIC FLYWAY | | | |
| Delaware (1)(2) | Sept. 9-Sept. 18 | 4 | 8 |
| Florida (3) | Sept. 25-Sept. 29 | 4 | 8 |
| Georgia | Sept. 18-Sept. 26 | 4 | 8 |
| Maryland (1) | Sept. 11-Sept. 21 | 4 | 8 |
| North Carolina (1) | Sept. 9-Sept. 18 | 4 | 8 |
| South Carolina (5) | Sept. 17-Sept. 26 | 4 | 8 |
| Virginia (1) | Sept. 16- Sept. 25 | 4 | 8 |
| MISSISSIPPI FLYWAY | | | |
| Alabama | Sept. 4-Sept. 19 | 4 | 8 |

| | Season Dates | Limits Bag | Limits Possession |
|---|---|---|---|
| Arkansas (4) | Sept. 11-Sept. 26 | 4 | 8 |
| Illinois (4) | Sept. 4-Sept. 19 | 4 | 8 |
| Indiana (4) | Sept. 4-Sept. 19 | 4 | 8 |
| Iowa (6) | | | |
| North Zone | Sept. 18-Sept. 22 | – | – |
| South Zone | Sept. 18-Sept. 22 | – | – |
| Kentucky (7) | Sept. 15-Sept. 19 | 4 | 8 |
| Louisiana | Sept. 11-Sept. 26 | 4 | 8 |
| Mississippi | Sept. 11-Sept. 26 | 4 | 8 |
| Missouri (4) | Sept. 11-Sept. 26 | 4 | 8 |
| Ohio (4) | Sept. 1-Sept. 16 | 4 | 8 |
| Tennessee (7) | Sept. 11-Sept. 15 | 4 | 8 |
| CENTRAL FLYWAY | | | |
| Colorado | Sept. 4-Sept. 12 | 4 | 8 |
| Kansas | | | |
| Low Plains | Sept. 11-Sept. 26 | 4 | 8 |
| High Plains | Sept. 11-Sept. 19 | 4 | 8 |
| New Mexico | Sept. 18-Sept. 26 | 4 | 8 |
| Oklahoma | | | |
| Low Plains | Sept. 11-Sept. 26 | 4 | 8 |
| High Plains | Sept. 11-Sept. 19 | 4 | 8 |
| Texas | Sept. 11-Sept. 26 | 4 | 8 |

(1) Area restrictions. See State regulations.

(2) In Delaware, the shooting hours are from ½ hour before sunrise to 10:00 a.m.

(3) In Florida, the daily bag limit is 4 wood ducks and teal in the aggregate. The possession limit is twice the daily bag limit.

(4) Shooting hours are from sunrise to sunset.

(5) In South Carolina, shooting hours are from sunrise to noon.

(6) In Iowa, the September season is part of the regular season, and limits will conform to those set for the regular season.

(7) In Kentucky and Tennessee, the daily bag limit is 4 wood ducks and teal in the aggregate, of which no more than 2 may be wood ducks. The possession limit is twice the daily bag limit.

(d) Special Early Canada Goose Seasons.

| | Season Dates | Limits Bag | Limits Possession |
|---|---|---|---|
| ATLANTIC FLYWAY | | | |
| Connecticut | | | |
| North Zone | Sept. 1- Sept. 3 & | 5 | 10 |
| | Sept. 7-Sept. 25 | 5 | 10 |
| Delaware | Sept. 1-Sept. 15 | 5 | 10 |
| Maine | Sept. 7-Sept. 25 | 3 | 6 |
| Maryland | | | |
| Eastern Unit | Sept. 1-Sept. 15 | 5 | 10 |
| Western Unit | Sept. 1-Sept. 25 | 5 | 10 |
| Massachusetts (1) | | | |
| Central Zone | Sept. 7-Sept. 25 | 5 | 10 |
| Coastal Zone | Sept. 7-Sept. 25 | 5 | 10 |
| Western Zone | Sept. 7-Sept. 25 | 3 | 6 |
| New Hampshire | Sept. 7-Sept. 25 | 3 | 6 |
| New Jersey | Sept. 1-Sept. 30 | 5 | 10 |
| New York | | | |
| Lake Champlain Zone | Sept. 7-Sept. 15 | 2 | 4 |
| Northeastern Zone | Sept. 1-Sept. 25 | 5 | 10 |
| Western Zone | Sept. 1-Sept. 25 | 5 | 10 |
| Montezuma Zone | Sept. 1-Sept. 20 | 5 | 10 |
| Southeastern Zone | Sept. 1-Sept. 25 | 5 | 10 |
| Long Island Zone (2) | Sept. 7-Sept. 30 | 5 | 10 |
| North Carolina (1) | | | |
| Northeast Hunt Unit | Sept. 1-Sept. 20 | 3 | 6 |
| Rest of State | Sept. 7-Sept. 30 | 3 | 6 |

| | Season Dates | Limits Bag | Limits Possession |
|---|---|---|---|
| Pennsylvania | | | |
| Southeast Hunt Area | Sept. 1-Sept. 25 | 5 | 10 |
| Rest of State | Sept. 1-Sept. 25 | 3 | 6 |
| Rhode Island | Sept. 11-Sept. 25 | 5 | 10 |
| South Carolina (1) | | | |
| Early-Season Hunt Unit | Sept. 11-Sept. 25 | 4 | 8 |
| Vermont | | | |
| Lake Champlain Zone | Sept. 7-Sept. 15 | 2 | 4 |
| Interior Vermont Zone: | | | |
| Bennington, Rutland, & Windham Counties | Sept. 7-Sept. 15 | 5 | 10 |
| Rest of Zone | Sept. 7-Sept. 15 | 2 | 4 |
| Virginia | Sept. 1-Sept. 3 | 5 | 10 |
| | Sept. 7-Sept. 25 | 5 | 10 |
| West Virginia | Sept. 1-Sept. 15 | 3 | 6 |
| MISSISSIPPI FLYWAY | | | |
| Alabama | Sept. 4-Sept. 15 | 5 | 10 |
| Illinois | | | |
| Northeast Zone | Sept. 1-Sept. 15 | 5 | 10 |
| North Zone | Sept. 1-Sept. 15 | 2 | 4 |
| Central Zone | Sept. 1-Sept. 15 | 2 | 4 |
| South Zone | Sept. 1-Sept. 15 | 2 | 4 |
| Indiana | Sept. 1-Sept. 15 | 5 | 10 |
| Iowa | | | |
| North Zone | Sept. 11-Sept. 12 | 2 | 4 |
| Michigan | | | |
| Upper Peninsula | Sept. 1-Sept. 10 | 5 | 10 |
| Lower Peninsula (3) | Sept. 1-Sept. 15 | 5 | 10 |
| Minnesota | | | |
| Twin Cities Metro Zone | Sept. 4-Sept. 22 | 5 | 10 |
| Two Goose Zone | Sept. 4-Sept. 22 | 2 | 4 |
| Five Goose Zone | Sept. 4-Sept. 22 | 5 | 10 |
| Northwest Goose Zone | Sept. 4-Sept. 15 | 2 | 4 |
| Mississippi (4) | Sept. 1-Sept. 15 | 5 | 10 |
| Ohio (2) | Sept. 1-Sept. 15 | 4 | 8 |
| Tennessee | | | |
| Middle Tennessee Zone | Sept. 4-Sept. 8 | 3 | 6 |
| East Tennessee Zone | Sept. 1-Sept. 15 | 5 | 10 |
| Wisconsin | | | |
| Early-Season Subzone A | Sept. 1-Sept. 15 | 5 | 10 |
| Early-Season Subzone B | Sept. 1-Sept. 15 | 3 | 6 |
| CENTRAL FLYWAY | | | |
| Kansas | | | |
| Sept. Canada Goose Unit | Sept. 1-Sept. 13 | 3 | 6 |
| North Dakota (2) | Sept. 1-Sept. 15 | 3 | 6 |
| South Dakota (2) | Sept. 1-Sept. 15 | 5 | 10 |
| PACIFIC FLYWAY | | | |
| California | | | |
| Humboldt County | Sept. 4-Sept. 12 | 2 | 2 |
| Idaho | | | |
| East Canada Goose Zone (1)(2) | Sept. 1-Sept. 12 | 2 | 4 |
| Nez Perce County | Sept. 5-Sept. 11 | 4 | 8 |
| Oregon | | | |
| Northwest Zone | Sept. 11-Sept. 18 | 5 | 10 |
| Southwest Zone | Sept. 4-Sept. 10 | 5 | 10 |
| East Zone | Sept. 4-Sept. 10 | 5 | 10 |
| Washington | | | |
| Statewide | Sept. 7-Sept. 12 | 3 | 6 |
| Wyoming (1) | Sept. 1-Sept. 7 | 2 | 4 per season |

(1) State permit required.

(2) See State regulations for additional information.

(3) In Michigan, the season is closed in Huron, Saginaw, and Tuscola Counties.

(4) In Mississippi, the season is closed on Roebuck Lake in Leflore County.

(e) Regular Goose Seasons.

Note: Bag and possession limits will conform to those set for the regular season.

| | Season Dates |
|---|---|
| MISSISSIPPI FLYWAY | |
| Michigan (1) | Sept. 19-Oct. 3 |
| Wisconsin | |
| Horicon Zone | Sept. 18-Sept. 30 |
| Collins Zone | Sept. 18-Sept. 30 |
| Exterior Zone | Sept. 25-Sept. 30 |

(1) In Michigan, season dates for the Muskegon Wastewater, Saginaw County, Allegan County, Tuscola/Huron Goose Management Units in the South Zone will be established in the late-season regulatory process.

(f) Youth Waterfowl Hunting Day

The following seasons are open only to youth hunters. Youth Hunters must be accompanied into the field by an adult at least 18 years of age. This adult can not duck hunt but may participate in other open seasons.

Definitions

**Youth Hunters**: Includes youths 15 years of age or younger.

**The Atlantic Flyway**: Includes Connecticut, Delaware, Florida, Georgia, Maine, Maryland, Massachusetts, New Hampshire, New Jersey, New York, North Carolina, Pennsylvania, Rhode Island, South Carolina, Vermont, Virginia, and West Virginia.

**The Mississippi Flyway**: Includes Alabama, Arkansas, Illinois, Indiana, Iowa, Kentucky, Louisiana, Michigan, Minnesota, Mississippi, Missouri, Ohio, Tennessee, and Wisconsin.

**The Central Flyway**: Includes Colorado (east of the Continental Divide), Kansas, Montana (Blaine, Carbon, Fergus, Judith Basin, Stillwater, Sweetgrass, Wheatland, and all counties east thereof), Nebraska, New Mexico (east of the Continental Divide except that the Jicarilla Apache Indian Reservation is in the Pacific Flyway), North Dakota, Oklahoma, South Dakota, Texas, and Wyoming (east of the Continental Divide).

**The Pacific Flyway**: Includes the States of Arizona, California, Colorado (west of the Continental Divide), Idaho, Montana (including and to the west of Hill, Chouteau, Cascade, Meagher, and Park Counties), Nevada, New Mexico (the Jicarilla Apache Indian Reservation and west of the Continental Divide), Oregon, Utah, Washington, and Wyoming (west of the Continental Divide including the Great Divide Basin).

Note: Bag and possession limits will conform to those set for the regular season.

| | Season Dates |
|---|---|
| ATLANTIC FLYWAY | |
| Connecticut | Deferred |
| Delaware | |
| Ducks, geese, mergansers, coots, moorhens and gallinules | Oct. 23 |
| Florida | Deferred |
| Georgia | |
| Ducks, geese, mergansers, coots, moorhens and gallinules | Nov. 13 |
| Maine (1) | |
| Ducks, mergansers, and coots | |
| Statewide | Sept. 18 |
| Maryland (2) | |
| Ducks, mergansers and coots | Oct. 2 |
| Massachusetts | Deferred |
| New Hampshire | Deferred |
| New Jersey | |
| Ducks, geese, mergansers, coots, moorhens and gallinules | |
| Statewide | Sept. 25 |
| New York | |
| Ducks, mergansers and coots | |
| Long Island Zone | Oct. 24 |
| Lake Champlain Zone | Sept. 26 |
| Northeastern Zone | Sept. 26 |
| Southeastern Zone | Sept. 26 |
| Western Zone | Oct. 10 |
| North Carolina | Deferred |
| Pennsylvania | |
| Ducks, mergansers, coots and moorhens | |
| Statewide | Sept. 25 |
| Rhode Island | |
| Ducks, mergansers and coots | Nov. 6 |
| South Carolina | |
| Ducks, mergansers and coots | Jan. 22 |

| | Season Dates |
|---|---|
| Vermont | |
| Ducks, mergansers and coots | |
| Statewide | Sept. 26 |
| Virginia | Deferred |
| West Virginia | |
| Ducks, geese, mergansers, coots, moorhens, and gallinules | |
| Statewide | Sept. 18 |
| MISSISSIPPI FLYWAY | |
| Alabama | |
| Ducks, mergansers, coots, geese, moorhens and gallinules | |
| Statewide | Feb. 5 |
| Arkansas | Deferred |
| Illinois | |
| Ducks, mergansers, coots and geese | |
| North Zone | Oct. 2 |
| Central Zone | Oct. 16 |
| South Zone | Nov. 6 |
| Indiana | Deferred |
| Iowa | |
| Ducks, Canada geese, mergansers and coots | |
| Statewide | Oct. 9 |
| Kentucky | Deferred |
| Louisiana | Deferred |
| Michigan | |
| Ducks, geese, mergansers, coots, moorhens and gallinules | |
| Statewide | Sept. 18 |
| Minnesota (3) | |
| Ducks, Canada geese, mergansers, coots, moorhens and gallinules | Sept. 18 |
| Mississippi | Deferred |
| Missouri | Deferred |
| Ohio | Deferred |
| Tennessee | Deferred |

| | Season Dates |
|---|---|
| Wisconsin | |
| Ducks, geese, mergansers, coots, moorhens and gallinules | |
| Statewide | Sept. 18 |
| CENTRAL FLYWAY | |
| Colorado | |
| Ducks, dark geese, mergansers and coots | Sept. 25 |
| Kansas (4) | |
| Ducks, dark geese, mergansers and coots | |
| High Plains | Sept. 25 |
| Low Plains | |
| Early Zone | Deferred |
| Late Zone | Deferred |
| Montana | |
| Ducks, geese, mergansers and coots | Sept. 25 |
| Nebraska (5) | |
| Ducks, mergansers, coots, and geese | Sept. 18 |
| New Mexico | |
| Ducks, mergansers, coots, geese, and moorhens | |
| North Zone | Oct. 2 |
| South Zone | Oct. 9 |
| North Dakota | |
| Ducks, geese, mergansers and coots | |
| Statewide | Sept. 25 |
| Oklahoma | Deferred |
| South Dakota (6) | |
| Ducks, Canada geese, and mergansers | |
| Statewide | Sept. 25 |
| Texas | Deferred |
| Wyoming | |
| Ducks, dark geese, mergansers and coots | |
| Statewide | Sept. 25 |
| PACIFIC FLYWAY (7) | |
| Arizona | |
| Ducks, geese, coots, moorhens and gallinules | |
| North Zone | Oct. 2 |
| South Zone | Jan. 22 |

| | Season Dates |
|---|---|
| California | |
| Ducks, brant, geese, and coots | |
| Northeastern Zone | Oct. 2 |
| Colorado River Zone | Jan. 22 |
| Southern Zone | Jan. 29 |
| Southern San Joaquin Valley Zone | Jan. 29 |
| Balance-of-State Zone | Jan. 29 |
| Colorado | |
| Ducks, dark geese and coots | Sept. 25 |
| Idaho | |
| Ducks, Canada geese, and coots | |
| Statewide | Sept. 25 |
| Montana | |
| Ducks, geese, and coots | Sept. 25 |
| Nevada | |
| Ducks, geese, coots, moorhens, and gallinules | |
| Clark and Lincoln Counties | Jan. 29 |
| Rest of State | Sept. 25 |
| Utah | |
| Ducks, geese, and coots | |
| Statewide | Sept. 25 |
| Washington (8) | |
| Ducks, Canada geese, and coots | |
| Statewide | Sept. 25 |
| Wyoming | |
| Ducks, dark geese, and coots | Sept. 25 |

(1) In Maine, the season is closed for black ducks. Shooting hours are sunrise to sunset.

(2) In Maryland, the accompanying adult must be at least 21 years of age and possess a valid Maryland hunting license (or be exempt from the license requirement). This accompanying adult may not shoot or possess a firearm.

(3) In Minnesota, the Canada goose limit is 1, except that in the West Goose Zone, the limit is 5.

(4) In Kansas, the adult accompanying the youth must possess any licenses and/or stamps required by law for that individual to hunt waterfowl.

(5) In Nebraska, see State regulations for additional information on the daily bag limit.

(6) In South Dakota, the limit for Canada geese is 3.

(7) In the Pacific Flyway, the daily bag limit for ducks includes mergansers.

(8) In Washington, the bag limit for Canada geese is 4.

7. Section 20.106 is revised to read as follows:

**§20.106 Seasons, limits, and shooting hours for sandhill cranes.**

Subject to the applicable provisions of the preceding sections of this part, areas open to hunting, respective open seasons (dates inclusive), shooting and hawking hours, and daily bag and possession limits on the species designated in this section are as follows:

Shooting and Hawking hours are one-half hour before sunrise until sunset, except as otherwise noted. Area descriptions were published in the August 27, 1999, Federal Register.

CHECK STATE REGULATIONS FOR AREA DESCRIPTIONS AND ANY ADDITIONAL RESTRICTIONS.

Note: States with deferred seasons may select those seasons at the same time they select waterfowl seasons in August. Consult late-season regulations for further information.

| | Season Dates | Limits Bag | Limits Possession |
|---|---|---|---|
| CENTRAL FLYWAY | | | |
| Colorado (1) | Oct. 2-Nov. 28 | 3 | 6 |
| Kansas (1)(2) | Nov. 6-Jan. 2 | 2 | 4 |
| Montana | | | |
| Regular Season Area (1) | Oct. 2-Nov. 28 | 3 | 6 |
| Special Season Area (3) | Sept. 11-Sept. 19 | 1 per season | |
| New Mexico | | | |
| Regular Season Area (1) | Oct. 30-Jan. 30 | 3 | 6 |
| Middle Rio Grande Valley Area (3)(4)(5) | Oct. 23-Oct. 24 & | 2 | 2 |
| | Nov. 20-Nov. 21 & | 2 | 2 |
| | Dec. 11-Dec. 12 & | 2 | 2 |
| | Jan. 8-Jan. 9 | 2 | 2 |
| Southwest Area (3)(4)(5) | Dec. 18-Dec. 19 | 2 | 2 |
| North Dakota (1) | Sept. 11-Nov. 7 | 3 | 6 |
| Oklahoma (1) | Deferred | -- | -- |
| South Dakota (1) | Sept. 25-Nov. 21 | 3 | 6 |

| | Season Dates | Limits Bag | Limits Possession |
|---|---|---|---|
| Texas (1) | | | |
| Zone A | Nov. 13-Feb. 13 | 3 | 6 |
| Zone B | Dec. 4-Feb. 13 | 3 | 6 |
| Zone C | Jan. 8-Feb. 13 | 3 | 6 |
| Wyoming | | | |
| Regular Season Area (1) | Sept. 11-Nov. 7 | 3 | 6 |
| Riverton-Boysen Unit (3) | Sept. 18-Sept. 29 | 1 per season | |
| Big Horn and Park Counties (3) | Sept. 18-Sept. 29 | 1 per season | |
| PACIFIC FLYWAY | | | |
| Arizona (3) | Oct. 29-Oct. 31 & | 2 per season | |
| | Nov. 1-Nov. 3 & | 2 per season | |
| | Nov. 5-Nov. 7 & | 2 per season | |
| | Nov. 9-Nov. 11 & | 2 per season | |
| | Nov. 13-Nov. 15 | 2 per season | |
| Idaho (3) | Sept. 1-Sept. 15 | 1 per season | |
| Montana | | | |
| Special Season Area (3) | Sept. 11-Sept. 12 & | 1 per season | |
| | Sept. 18-Sept. 19 | 1 per season | |
| Utah (3) | Sept. 5-Sept. 13 | 1 per season | |
| Wyoming | | | |
| Bear River Area (3) | Sept. 1-Sept. 14 | 1 per season | |
| Salt River Area (3) | Sept. 1-Sept. 7 | 1 per season | |
| Eden-Farson Area (3) | Sept. 1-Sept. 7 | 1 per season | |

(1) Each hunter participating in a regular sandhill crane hunting season must obtain and carry in his possession while hunting sandhill cranes a valid Federal sandhill crane hunting permit available without cost from conservation agencies in the States where crane hunting seasons are allowed. The permit must be displayed to any authorized law enforcement official upon request.

(2) In Kansas, the Federal sandhill crane permit must be validated by the State. No person while hunting cranes shall use or possess shot other than steel or such shot approved as nontoxic shot. Shooting hours are sunrise to 2:00 p.m.

(3) Hunting is by State permit only.

(4) The seasonal bag limit is 2 in the Middle Rio Grande Valley Area and 4 in the Southwest Area.

(5) Shooting hours are sunrise to sunset.

8. Section 20.109 is revised to read as follows:

**§20.109 Extended seasons, limits, and hours for taking migratory game birds by falconry.**

Subject to the applicable provisions of the preceding sections of this part, areas open to hunting, respective open seasons (dates inclusive), hawking hours, and daily bag and possession limits for the species designated in this section are prescribed as follows:

Hawking hours are one-half hour before sunrise until sunset except as otherwise noted. Area descriptions were published in the August 27, 1999, Federal Register. For those extended seasons for Ducks, Mergansers, and Coots, area descriptions were published in the September 29, 1998, Federal Register (63 FR 51998) and will be published again in a September 1999 Federal Register.

CHECK STATE REGULATIONS FOR AREA DESCRIPTIONS AND ANY ADDITIONAL RESTRICTIONS.

Daily bag limit . . . . . 3 migratory birds, singly or in the aggregate.

Possession limit . . . . . 6 migratory birds, singly or in the aggregate.

These limits apply to falconry during both regular hunting seasons and extended falconry seasons – unless further restricted by State regulations. The falconry bag and possession limits are not in addition to regular season limits. Unless otherwise specified, extended falconry for ducks does not include sea ducks within the special sea duck areas. Only extended falconry seasons are shown below. Many States permit falconry during the gun seasons. Please consult State regulations for details.

For ducks, mergansers, coots, geese, and some moorhen seasons; additional season days occurring after September 30 will be published with the late-season selections. Some States have deferred selections. Consult late-season regulations for further information.

| | Extended Falconry Dates |
|---|---|
| ATLANTIC FLYWAY | |
| Delaware | |
| Mourning dove | Sept. 1-Sept. 3 & Sept. 27- Oct. 16 & Nov. 1-Nov. 11 |
| Rail | Nov. 10- Dec. 16 |
| Woodcock | Oct. 1-Oct. 16 & Nov. 1-Nov. 20 & Dec. 9-Jan. 18 |
| Snipe | Nov. 1-Nov. 20 |
| Florida | |
| Mourning and white-winged doves | Oct. 26-Nov. 12 & Nov. 29-Dec. 10 & Jan. 10-Jan. 16 |

| | Extended Falconry Dates |
|---|---|
| Florida (cont.) | |
| Rails | Nov. 10-Dec. 16 |
| Woodcock | Nov. 24-Dec. 17 & Jan. 17-Mar. 9 |
| Common moorhens | Nov. 10-Dec. 15 |
| Georgia | |
| Moorhens, gallinules, and sea ducks | Nov. 13-Nov. 19 & Jan. 21-Feb. 18 |
| Maryland | |
| Mourning doves | Oct. 22-Nov. 14 & Dec. 12-Dec. 19 & Jan. 2-Jan. 6 |
| Rails | Nov. 10-Dec. 16 |
| Woodcock | Oct. 1-Oct. 24 & Nov. 14-Nov. 26 & Dec. 12-Jan. 9 |
| Pennsylvania | |
| Mourning doves | Oct. 7-Oct. 29 & Nov. 29-Dec. 17 |
| Virginia | |
| Doves | Sept. 26-Oct. 1 & Dec. 11-Dec. 24 & Jan. 6-Jan. 22 |
| Rails | Oct. 13-Oct. 21 & Dec. 24-Jan. 20 |
| Woodcock | Nov. 14-Dec. 17 & Jan. 2-Jan. 31 |
| Canada geese | Sept. 4 & Sept. 6 |
| MISSISSIPPI FLYWAY | |
| Illinois | |
| Mourning doves | Oct. 18-Nov. 5 & Nov. 19-Dec. 16 |

| | Extended Falconry Dates |
|---|---|
| Illinois (cont.) | |
| Rails | Nov. 13-Dec. 19 |
| Woodcock | Sept. 1-Oct. 15 & Nov. 30-Dec. 16 |
| Indiana | |
| Mourning doves | Oct. 17-Nov. 4 & Jan. 1-Jan. 28 |
| Woodcock | Sept. 25-Oct. 7 & Nov. 22-Jan. 9 |
| Ducks, mergansers, and coots (1) North Zone | Sept. 23-Sept. 30 |
| Michigan | |
| Rails and snipe | Sept. 7-Sept. 14 & Nov. 15-Dec. 12 & Mar. 1-Mar. 10 |
| Ducks, mergansers, coots, and moorhens (1) | Sept. 7-Sept. 30 |
| Woodcock | Sept. 7-Sept. 18 & Nov. 9-Dec. 12 & Mar. 1-Mar. 10 |
| Minnesota | |
| Woodcock | Sept. 1-Sept. 24 & Nov. 9-Dec. 16 |
| Rails and snipe | Nov. 5-Dec. 16 |
| Missouri | |
| Mourning doves | Oct. 1-Oct. 31 & Dec. 1-Dec. 16 |
| Ducks, mergansers, and coots | Sept. 11-Sept. 26 |
| Tennessee | |
| Mourning doves | Sept. 27-Oct. 8 & Oct. 25-Nov. 29 |
| Ducks (1) | Sept. 16-Sept. 29 |

| | Extended Falconry Dates |
|---|---|
| Wisconsin | |
| Rails, snipe, moorhens, and gallinules (1) | Sept. 1-Sept. 30 |
| Woodcock | Sept. 1-Sept. 24 |
| Ducks, mergansers, and coots (1) | Sept. 11-Sept. 30 |
| CENTRAL FLYWAY | |
| Montana (2) | |
| Ducks, mergansers, and coots (1) | Sept. 22-Sept. 30 |
| New Mexico (2) | |
| Doves | |
| North Zone | Oct. 31-Nov. 5 & Nov. 28-Jan. 7 |
| South Zone | Oct. 1-Nov. 5 & Nov. 28-Nov. 30 & Dec. 31-Jan. 7 |
| Band-tailed pigeons | |
| North Zone | Sept. 21-Dec. 16 |
| South Zone | Oct. 21-Jan. 15 |
| Sandhill cranes | |
| Regular Season Area | Oct. 16-Oct. 30 |
| North Dakota | |
| Ducks, mergansers, and coots | Sept. 18-Oct. 1 |
| Snipe | Sept. 1-Sept. 17 |
| South Dakota | |
| Ducks, mergansers, and coots (1) | |
| High Plains | Sept. 4-Sept. 12 |
| Low Plains | |
| North & Middle Zones | Sept. 4-Sept. 24 & Sept. 26-Sept. 30 |
| South Zone | Sept. 6-Sept. 24 & Sept. 26-Sept. 30 |
| Texas | |
| Mourning and white-winged doves | Nov. 9-Dec. 25 |
| Rails and gallinules | Dec. 16-Jan. 21 |
| Woodcock | Nov. 24-Dec. 17 & Feb. 1-Mar. 9 |
| Wyoming | |
| Rails | Nov. 5-Dec. 2 |
| Ducks, mergansers, and coots (1) | Sept. 22-Oct. 1 |
| PACIFIC FLYWAY | |
| Arizona | |
| Doves | Sept. 16-Nov. 1 |
| Idaho | |
| Mourning doves | Nov. 1-Jan. 16 |
| New Mexico (2) | |
| Doves | |
| North Zone | Oct. 31-Nov. 5 & Nov. 28-Jan. 7 |
| South Zone | Oct. 1-Nov. 5 & Nov. 28-Nov. 30 & Dec. 31-Jan.7 |
| Band-tailed pigeons | |
| North Zone | Sept. 21-Dec. 16 |
| South Zone | Oct. 21-Jan. 15 |

| | Extended Falconry Dates |
|---|---|
| Oregon (3) | |
| Mourning doves | Oct. 1-Dec. 16 |
| Band-tailed pigeons | Sept. 1-Sept. 14 & Sept. 24-Dec. 16 |
| Utah | |
| Mourning doves and band-tailed pigeons | Oct. 1-Dec. 16 |
| Washington | |
| Mourning doves | Oct. 1-Dec. 31 |
| Wyoming | |
| Rails | Nov. 5-Dec. 2 |

(1) Additional days occurring after September 30 will be published with the late-season selections.

(2) In Montana and New Mexico, the bag limit is 2 and the possession limit is 6.

(3) In Oregon, no more than 1 pigeon daily in bag or possession.

[FR Doc. 99–22384 Filed 8–30–99; 8:45 am]

BILLING CODE 4310–55–C

# Proposed Rules

Federal Register
Vol. 64, No. 168
Tuesday, August 31, 1999

This section of the FEDERAL REGISTER contains notices to the public of the proposed issuance of rules and regulations. The purpose of these notices is to give interested persons an opportunity to participate in the rule making prior to the adoption of the final rules.

## DEPARTMENT OF TRANSPORTATION

### Federal Aviation Administration

### 14 CFR Part 39

**[Docket No. 99–NM–167–AD]**

**RIN 2120–AA64**

## Airworthiness Directives; McDonnell Douglas Model MD–11 Series Airplanes

**AGENCY:** Federal Aviation Administration, DOT.

**ACTION:** Notice of proposed rulemaking (NPRM).

**SUMMARY:** This document proposes the supersedure of two existing airworthiness directives (AD), applicable to certain McDonnell Douglas Model MD–11 series airplanes, that currently require inspections in the lower center cargo compartment at frame 1681 to verify that a certain bracket and a certain open face nylon clamp were installed to a specific wire bundle support and to detect damage of the subject wire bundle; and corrective actions, if necessary. Those AD's were prompted by an incident in which the insulation blanket in the lower center cargo compartment was found to be burnt due to a missing wiring harness support bracket/clamp on a wire bundle. This action would require a similar inspection and corrective actions required by the existing AD's and would remove certain airplanes from the applicability of the existing AD's. This action also would add a requirement to install a wire assembly support bracket, clamp, and spacer, or revise the wire assembly support bracket and clamp installation; as applicable. The actions specified by the proposed AD are intended to prevent sparks, smoke, and possible fire in the lower center cargo compartment.

**DATES:** Comments must be received by October 15, 1999.

**ADDRESSES:** Submit comments in triplicate to the Federal Aviation Administration (FAA), Transport Airplane Directorate, ANM–114, Attention: Rules Docket No. 99–NM–167–AD, 1601 Lind Avenue, SW., Renton, Washington 98055–4056. Comments may be inspected at this location between 9:00 a.m. and 3:00 p.m., Monday through Friday, except Federal holidays.

The service information referenced in the proposed rule may be obtained from Boeing Commercial Aircraft Group, Long Beach Division, 3855 Lakewood Boulevard, Long Beach, California 90846, Attention: Technical Publications Business Administration, Dept. C1-L51 (2–60). This information may be examined at the FAA, Transport Airplane Directorate, 1601 Lind Avenue, SW., Renton, Washington; or at the FAA, Transport Airplane Directorate, Los Angeles Aircraft Certification Office, 3960 Paramount Boulevard, Lakewood, California.

**FOR FURTHER INFORMATION CONTACT:** Brett Portwood, Aerospace Engineer, Systems and Equipment Branch, ANM–130L, FAA, Transport Airplane Directorate, Los Angeles Aircraft Certification Office, 3960 Paramount Boulevard, Lakewood, California 90712–4137; telephone (562) 627–5350; fax (562) 627–5210.

**SUPPLEMENTARY INFORMATION:**

### Comments Invited

Interested persons are invited to participate in the making of the proposed rule by submitting such written data, views, or arguments as they may desire. Communications shall identify the Rules Docket number and be submitted in triplicate to the address specified above. All communications received on or before the closing date for comments, specified above, will be considered before taking action on the proposed rule. The proposals contained in this notice may be changed in light of the comments received.

Comments are specifically invited on the overall regulatory, economic, environmental, and energy aspects of the proposed rule. All comments submitted will be available, both before and after the closing date for comments, in the Rules Docket for examination by interested persons. A report summarizing each FAA-public contact concerned with the substance of this proposal will be filed in the Rules Docket.

Commenters wishing the FAA to acknowledge receipt of their comments submitted in response to this notice must submit a self-addressed, stamped postcard on which the following statement is made: ''Comments to Docket Number 99–NM–167–AD.'' The postcard will be date stamped and returned to the commenter.

### Availability of NPRMs

Any person may obtain a copy of this NPRM by submitting a request to the FAA, Transport Airplane Directorate, ANM–114, Attention: Rules Docket No. 99–NM–167–AD, 1601 Lind Avenue, SW., Renton, Washington 98055–4056.

### Discussion

On April 15, 1999, the FAA issued AD 99–08–51, amendment 39–11138 (64 FR 22544, April 27, 1999), which is applicable to certain McDonnell Douglas Model MD–11 series airplanes. (These airplanes are equipped with a 72-inch cargo door and use the light-weight cargo handling system.) That AD requires visual inspections under the floorboards in the lower center cargo compartment at frame 1681 to verify that a certain bracket and a certain open face nylon clamp are installed to a specific support wire bundle and to detect damage of the subject wire bundle; repair of damaged wiring; and installation of certain silicone rubber coated with a glass cloth protective wrap around the wire bundle, if necessary. That action was prompted by an incident in which the insulation blanket between frames 1661 and 1681 in the lower center cargo compartment was found to be burnt due to a missing wiring harness support bracket/clamp on the wire bundle at frame 1681. The requirements of that AD are intended to ensure that such a wire harness support bracket/clamp is installed; a missing bracket/clamp could cause the wire bundle to chafe against the frame, which could result in sparks, smoke, and possible fire in the lower center cargo compartment.

After issuance of AD 99–08–51, the FAA determined that the wire routing on McDonnell Douglas Model MD–11 series airplanes that are equipped with a 72-inch cargo door and use any cargo handling system must also be inspected. Therefore, on April 23, 1999, the FAA issued a similar action [i.e., AD 99–09–51, amendment 39–11154 (64 FR 23179, April 30, 1999)], to address these

additional airplanes that were not included in the applicability of AD 99–08–51.

**Actions Since Issuance of Previous Rule**

Since the issuance of AD 99–08–51 and AD 99–09–51, the FAA has determined that inspecting the wire assembly, structure, and blankets for evidence of arcing and chafing damage; and installing a support, clamp, and spacer, or revising the existing support installation to add a spacer; will further minimize the possibility of wire chafing.

**Explanation of Relevant Service Information**

The FAA has reviewed and approved McDonnell Douglas Alert Service Bulletin MD11–24A155, dated June 1, 1999. The service bulletin describes procedures for an inspection of the wire assembly, structure, and blankets for evidence of arcing burns and chafing damage under the center cargo compartment floor; installation of protective sleeving on the wire assembly in the area of the frame; and corrective actions, if necessary. The corrective actions involve repairing damaged wire and structure; and repairing or replacing the damaged blanket with a new blanket. For certain airplanes, the service bulletin also describes procedures for installation of a wire assembly support bracket, clamp, and spacer. For certain other airplanes, the service bulletin also describes procedures for revising the wire assembly support bracket and clamp installation. In addition, the service bulletin describes procedures for submitting a report of the inspection results to Boeing. Accomplishment of the actions specified in the service bulletin is intended to adequately address the identified unsafe condition.

**Explanation of Requirements of Proposed Rule**

Since an unsafe condition has been identified that is likely to exist or develop on other products of this same type design, the proposed AD would supersede AD 99–08–51 and AD 99–09–51 to require accomplishment of the actions specified in the service bulletin described previously, except as discussed below.

**Differences Between the Proposed AD and Relevant Service Information**

McDonnell Douglas Alert Service Bulletin MD11–24A155, dated June 1, 1999, specifies that certain corrective actions required by this proposed AD may be accomplished in accordance with ''operator's shop practice.'' However, this proposed AD requires that the actions be accomplished in accordance with the procedures specified in ''Chapter 25 of the Aircraft Maintenance Manual.'' An ''operator's shop practice'' may be used only if approved as an alternative method of compliance in accordance with paragraph (c) of this AD.

Operators should note that although the referenced service bulletin recommends that operators submit a report of the inspection results to Boeing, this proposed AD does not require such reporting. As a result of the reporting requirements in AD's 99–08–51 and 99–09–51, the FAA has received an adequate amount of inspection reports from operators to identify the affected aircraft configurations and determine the proper corrective action.

**Explanation of Changes to the Applicability**

Operators also should note that the applicability of the proposed AD differs from the applicability of AD's 99–08–51 and 99–09–51. Subsequent to issuance of AD 99–08–51, one of the affected airplanes was involved in a hull loss accident. Subsequent to issuance of AD 99–09–51, investigation revealed that twelve early production aircraft had adequate wire routing such that the potential for wire assembly chafing was adequately minimized. Therefore, these airplanes have been removed from the applicability of this proposed AD.

**Other Related Rulemaking**

The FAA, in conjunction with Boeing and operators of Model MD–11 series airplanes, is continuing to review all aspects of the service history of those airplanes to identify potential unsafe conditions and to take appropriate corrective actions. This proposed AD is one of a series of actions identified during that process. The process is continuing and the FAA may consider additional rulemaking actions as further results of the review become available.

**Cost Impact**

There are approximately 183 airplanes of the affected design in the worldwide fleet. The FAA estimates that 63 airplanes of U.S. registry would be affected by this proposed AD.

It would take approximately 1 work hour to accomplish the proposed inspection, at an average labor rate of $60 per work hour. Based on these figures, the cost impact of the inspection proposed by this AD on U.S. operators is estimated to be $3,780, or $60 per airplane.

It would take approximately 1 work hour to accomplish the proposed modification, at an average labor rate of $60 per work hour. The cost of required parts would be nominal. Based on these figures, the cost impact of the modification proposed by this AD on U.S. operators is estimated to be $3,780, or $60 per airplane.

The cost impact figures discussed above are based on assumptions that no operator has yet accomplished any of the current or proposed requirements of this AD action, and that no operator would accomplish those actions in the future if this AD were not adopted. However, the FAA has been advised that manufacturer warranty remedies are available for some labor costs associated with accomplishing the proposed actions. Therefore, the future economic cost impact of this rule on U.S. operators may be less than the cost impact figures indicated above.

**Regulatory Impact**

The regulations proposed herein would not have substantial direct effects on the States, on the relationship between the national government and the States, or on the distribution of power and responsibilities among the various levels of government. Therefore, in accordance with Executive Order 12612, it is determined that this proposal would not have sufficient federalism implications to warrant the preparation of a Federalism Assessment.

For the reasons discussed above, I certify that this proposed regulation (1) is not a ''significant regulatory action'' under Executive Order 12866; (2) is not a ''significant rule'' under the DOT Regulatory Policies and Procedures (44 FR 11034, February 26, 1979); and (3) if promulgated, will not have a significant economic impact, positive or negative, on a substantial number of small entities under the criteria of the Regulatory Flexibility Act. A copy of the draft regulatory evaluation prepared for this action is contained in the Rules Docket. A copy of it may be obtained by contacting the Rules Docket at the location provided under the caption **ADDRESSES.**

**List of Subjects in 14 CFR Part 39**

Air transportation, Aircraft, Aviation safety, Safety.

**The Proposed Amendment**

Accordingly, pursuant to the authority delegated to me by the Administrator, the Federal Aviation Administration proposes to amend part 39 of the Federal Aviation Regulations (14 CFR part 39) as follows:

## PART 39—AIRWORTHINESS DIRECTIVES

1. The authority citation for part 39 continues to read as follows:

**Authority:** 49 U.S.C. 106(g), 40113, 44701.

### § 39.13 [Amended]

2. Section 39.13 is amended by removing amendment 39–11138 (64 FR 22544, April 27, 1999) and amendment 39–11154 (64 FR 23179, April 30, 1999), and by adding a new airworthiness directive (AD), to read as follows:

**McDonnell Douglas:** Docket 99–NM–167–AD. Supersedes AD 99–08–51, amendment 39–11138; and AD 99–09–51, amendment 39–11154.

*Applicability:* Model MD–11 series airplanes, as listed in McDonnell Douglas Alert Service Bulletin MD11–24A155, dated June 1, 1999; certificated in any category.

**Note 1:** This AD applies to each airplane identified in the preceding applicability provision, regardless of whether it has been modified, altered, or repaired in the area subject to the requirements of this AD. For airplanes that have been modified, altered, or repaired so that the performance of the requirements of this AD is affected, the owner/operator must request approval for an alternative method of compliance in accordance with paragraph (c) of this AD. The request should include an assessment of the effect of the modification, alteration, or repair on the unsafe condition addressed by this AD; and, if the unsafe condition has not been eliminated, the request should include specific proposed actions to address it.

*Compliance:* Required as indicated, unless accomplished previously.

To prevent sparks, smoke and possible fire in the lower center cargo compartment, accomplish the following:

**Phase 1: Inspection and Corrective Actions**

(a) Within 30 days after the effective date of this AD, perform an inspection of the wire assembly, structure, and blankets for evidence of arcing burns and chafing damage under the center cargo compartment floor, in accordance with Phase 1 of the Work Instructions of McDonnell Douglas Alert Service Bulletin MD11–24A155, dated June 1, 1999.

(1) Condition 1. If no arcing or chafing damage is detected, prior to further flight, install protective sleeving on the wire assembly in the area of the frame in accordance with the service bulletin.

(2) Condition 2. If any damaged wire, structure, or blanket is detected, prior to further flight, accomplish the actions specified in paragraphs (a)(2)(i), (a)(2)(ii), and (a)(2)(iii) of this AD.

(i) Repair damaged wire and structure in accordance with the service bulletin.

(ii) Repair or replace any damaged blanket with a new blanket, in accordance with Chapter 25 of the Aircraft Maintenance Manual; however, insulation blankets made of metallized polyethyleneteraphthalate (MPET) may not be used.

(iii) Install protective sleeving on the wire assembly in the area of the frame in accordance with the service bulletin.

**Note 2:** Accomplishment of the actions required by AD 99–08–51, amendment 39–11138, and AD 99–09–51, amendment 39–11154, prior to the effective date of this AD is considered acceptable for compliance with the requirements of paragraph (a) of this AD.

**Phase 2: Modification**

(b) Within 18 months after the effective date of this AD, accomplish the actions specified in paragraph (b)(1) or (b)(2) of this AD, as applicable, in accordance with Phase 2 of the Work Instructions of McDonnell Douglas Alert Service Bulletin MD11–24A155, dated June 1, 1999.

(1) For airplanes identified as Group 1 in the service bulletin: Install the wire assembly support bracket, clamp, and spacer.

(2) For airplanes identified as Group 2 in the service bulletin: Revise the wire assembly support bracket and clamp installation.

**Alternative Methods of Compliance**

(c) An alternative method of compliance or adjustment of the compliance time that provides an acceptable level of safety may be used if approved by the Manager, Los Angeles Aircraft Certification Office (ACO), FAA, Transport Airplane Directorate. Operators shall submit their requests through an appropriate FAA Principal Maintenance Inspector, who may add comments and then send it to the Manager, Los Angeles ACO.

**Note 3:** Information concerning the existence of approved alternative methods of compliance with this AD, if any, may be obtained from the Los Angeles ACO.

**Special Flight Permits**

(d) Special flight permits may be issued in accordance with sections 21.197 and 21.199 of the Federal Aviation Regulations (14 CFR 21.197 and 21.199) to operate the airplane to a location where the requirements of this AD can be accomplished.

Issued in Renton, Washington, on August 24, 1999.

**Vi L. Lipski,**

*Acting Manager, Transport Airplane Directorate, Aircraft Certification Service.*

[FR Doc. 99–22530 Filed 8–30–99; 8:45 am]

BILLING CODE 4910–13–P

---

## DEPARTMENT OF TRANSPORTATION

## Federal Aviation Administration

## 14 CFR Part 39

**[Docket No. 98–NM–339–AD]**

**RIN 2120–AA64**

## Airworthiness Directives; Boeing Model 747–100, –200 and 747SP Series Airplanes

**AGENCY:** Federal Aviation Administration, DOT.

**ACTION:** Notice of proposed rulemaking (NPRM).

**SUMMARY:** This document proposes the adoption of a new airworthiness directive (AD) that is applicable to certain Boeing Model 747–100, –200 and 747SP series airplanes. This proposal would require repetitive detailed visual and ultrasonic inspections to detect missing, damaged, or broken taperlock bolts in the diagonal brace underwing fittings; and corrective actions, if necessary. This proposal also would require eventual replacement of the aft 10 taperlock bolts with new bolts, which would constitute terminating action for the repetitive inspections. This proposal is prompted by reports of damaged, broken, and corroded taperlock bolts of the diagonal brace underwing fittings on the outboard strut due to stress corrosion cracking. The actions specified by the proposed AD are intended to prevent loss of the underwing fitting load path due to missing, damaged, or broken taperlock bolts, which could result in separation of the engine and strut from the airplane.

**DATES:** Comments must be received by October 15, 1999.

**ADDRESSES:** Submit comments in triplicate to the Federal Aviation Administration (FAA), Transport Airplane Directorate, ANM–114, Attention: Rules Docket No. 98–NM–339–AD, 1601 Lind Avenue, SW., Renton, Washington 98055–4056. Comments may be inspected at this location between 9:00 a.m. and 3:00 p.m., Monday through Friday, except Federal holidays.

The service information referenced in the proposed rule may be obtained from Boeing Commercial Airplane Group, P.O. Box 3707, Seattle, Washington 98124–2207. This information may be examined at the FAA, Transport Airplane Directorate, 1601 Lind Avenue, SW., Renton, Washington.

**FOR FURTHER INFORMATION CONTACT:** Tamara L. Anderson, Aerospace Engineer, Airframe Branch, ANM–120S, FAA, Transport Airplane Directorate, Seattle Aircraft Certification Office, 1601 Lind Avenue, SW., Renton, Washington 98055–4056; telephone (425) 227–2771; fax (425) 227–1181.

**SUPPLEMENTARY INFORMATION:**

### Comments Invited

Interested persons are invited to participate in the making of the proposed rule by submitting such written data, views, or arguments as they may desire. Communications shall identify the Rules Docket number and be submitted in triplicate to the address specified above. All communications received on or before the closing date

for comments, specified above, will be considered before taking action on the proposed rule. The proposals contained in this notice may be changed in light of the comments received.

Comments are specifically invited on the overall regulatory, economic, environmental, and energy aspects of the proposed rule. All comments submitted will be available, both before and after the closing date for comments, in the Rules Docket for examination by interested persons. A report summarizing each FAA-public contact concerned with the substance of this proposal will be filed in the Rules Docket.

Commenters wishing the FAA to acknowledge receipt of their comments submitted in response to this notice must submit a self-addressed, stamped postcard on which the following statement is made: ''Comments to Docket Number 98–NM–339–AD.'' The postcard will be date stamped and returned to the commenter.

## Availability of NPRMs

Any person may obtain a copy of this NPRM by submitting a request to the FAA, Transport Airplane Directorate, ANM–114, Attention: Rules Docket No. 98–NM–339–AD, 1601 Lind Avenue, SW., Renton, Washington 98055–4056.

## Discussion

The FAA has received reports indicating that damaged, broken, and corroded taperlock bolts were found on Boeing Model 747–100 and –200 series airplanes. The cause of the broken taperlock bolts is stress corrosion. The bolts are located on the diagonal brace underwing fittings on the outboard strut at the Number 1 and Number 4 pylon engine positions. This condition, if not corrected, could result in separation of the engine and strut from the airplane.

The subject taperlock bolts on Boeing Model 747SP series airplanes are identical to those on the affected Boeing Model 747–100 and –200 series airplanes. Therefore, all of these airplanes may be subjected to the same unsafe condition.

## Explanation of Relevant Service Information

The FAA has reviewed and approved Boeing Alert Service Bulletin 747–57A2308, dated August 6, 1998, which describes procedures for repetitive detailed visual and ultrasonic inspections to detect missing, damaged, or broken taperlock bolts; and corrective actions, if necessary. The corrective actions involve performing an open hole high frequency eddy current inspection to detect cracks at the bolt hole locations; and replacing missing, damaged, or broken taperlock bolt with a new bolt. This service bulletin also describes procedures for an optional terminating action for the repetitive inspections. Accomplishment of the actions specified in the service bulletin is intended to adequately address the identified unsafe condition.

## Explanation of Requirements of Proposed Rule

Since an unsafe condition has been identified that is likely to exist or develop on other products of this same type design, the proposed AD would require accomplishment of the actions specified in the service bulletin described previously, except as discussed below.

## Differences Between Proposed Rule and Service Bulletin

Operators should note that, although incorporation of the terminating action specified in the referenced service bulletin is optional, this AD proposes to mandate, within 48 months after the effective date of this AD, the open hole inspection and replacement of the aft 10 taperlock bolts with new bolts specified in the referenced service bulletin as terminating action for the repetitive inspections.

The FAA has determined that long-term continued operational safety will be better assured by design changes to remove the source of the problem, rather than by repetitive inspections. Long-term inspections may not be providing the degree of safety assurance necessary for the transport airplane fleet. This, coupled with a better understanding of the human factors associated with numerous continued inspections, has led the FAA to consider placing less emphasis on inspections and more emphasis on design improvements. The proposed replacement requirement is in consonance with these conditions.

In addition, operators should note that, although the service bulletin specifies that the manufacturer must be contacted for disposition of certain conditions, this proposal would require the repair of those conditions to be accomplished in accordance with a method approved by the FAA; or in accordance with data meeting the type certification basis of the airplane approved by a Boeing Company Designated Engineering Representative who has been authorized by the FAA to make such findings. For a method to be approved, the approval letter must specifically reference this AD.

## Cost Impact

There are approximately 274 airplanes of the affected design in the worldwide fleet. The FAA estimates that 122 airplanes of U.S. registry would be affected by this proposed AD, that it would take approximately 1 work hour per airplane to accomplish the proposed inspection, at an average labor rate of $60 per work hour. Based on these figures, the cost impact of the proposed inspection on U.S. operators is estimated to be $7,320, or $60 per airplane, per inspection cycle.

It would take approximately 8 work hours per airplane to accomplish the proposed terminating action, at an average labor rate of $60 per work hour. Required parts would cost approximately $8,008 per airplane. Based on these figures, the cost impact of the proposed terminating action on U.S. operators is estimated to be $1,035,536, or $8,488 per airplane.

The cost impact figures discussed above are based on the assumption that no operator has yet accomplished any of the proposed requirements of this AD action, and that no operator would accomplish those actions in the future if this AD were not adopted.

## Regulatory Impact

The regulations proposed herein would not have substantial direct effects on the States, on the relationship between the national government and the States, or on the distribution of power and responsibilities among the various levels of government.

Therefore, in accordance with Executive Order 12612, it is determined that this proposal would not have sufficient federalism implications to warrant the preparation of a Federalism Assessment.

For the reasons discussed above, I certify that this proposed regulation (1) is not a ''significant regulatory action'' under Executive Order 12866; (2) is not a ''significant rule'' under the DOT Regulatory Policies and Procedures (44 FR 11034, February 26, 1979); and (3) if promulgated, will not have a significant economic impact, positive or negative, on a substantial number of small entities under the criteria of the Regulatory Flexibility Act. A copy of the draft regulatory evaluation prepared for this action is contained in the Rules Docket. A copy of it may be obtained by contacting the Rules Docket at the location provided under the caption **ADDRESSES.**

## List of Subjects in 14 CFR Part 39

Air transportation, Aircraft, Aviation safety, Safety.

## The Proposed Amendment

Accordingly, pursuant to the authority delegated to me by the Administrator, the Federal Aviation Administration proposes to amend part 39 of the Federal Aviation Regulations (14 CFR part 39) as follows:

## PART 39—AIRWORTHINESS DIRECTIVES

1. The authority citation for part 39 continues to read as follows:

**Authority:** 49 U.S.C. 106(g), 40113, 44701.

### § 39.13 [Amended]

2. Section 39.13 is amended by adding the following new airworthiness directive:

**Boeing:** Docket 98–NM–339–AD.

*Applicability:* Model 747–100, –200, and 747SP series airplanes, line numbers 1 through 567 inclusive; equipped with aluminum diagonal brace underwing fittings; certificated in any category.

**Note 1:** This AD applies to each airplane identified in the preceding applicability provision, regardless of whether it has been otherwise modified, altered, or repaired in the area subject to the requirements of this AD. For airplanes that have been modified, altered, or repaired so that the performance of the requirements of this AD is affected, the owner/operator must request approval for an alternative method of compliance in accordance with paragraph (f) of this AD. The request should include an assessment of the effect of the modification, alteration, or repair on the unsafe condition addressed by this AD; and, if the unsafe condition has not been eliminated, the request should include specific proposed actions to address it.

*Compliance:* Required as indicated, unless accomplished previously.

To prevent loss of the underwing fitting load path due to missing, damaged, or broken taperlock bolts, which could result in separation of the engine and strut from the airplane, accomplish the following:

**Repetitive Inspections**

(a) Prior to the accumulation of 9,000 total flight cycles, or within 18 months after the effective date of this AD, whichever occurs later, accomplish the actions required by paragraphs (a)(1) and (a)(2) of this AD in accordance with Boeing Alert Service Bulletin 747–57A2308, dated August 6, 1998. Thereafter, repeat the inspections at intervals not to exceed 18 months until accomplishment of the actions specified in paragraph (d) of this AD.

(1) Perform a detailed visual inspection to detect missing taperlock bolts in the diagonal brace underwing fitting at the Number 1 and Number 4 pylons.

**Note 2:** For the purposes of this AD, a detailed visual inspection is defined as: ''An intensive visual examination of a specific structural area, system, installation, or assembly to detect damage, failure, or irregularity. Available lighting is normally supplemented with a direct source of good lighting at intensity deemed appropriate by the inspector. Inspection aids such as mirror, magnifying lenses, etc., may be used. Surface cleaning and elaborate access procedures may be required.''

(2) Perform an ultrasonic inspection to detect damaged or broken taperlock bolts in the diagonal brace underwing fitting at the Number 1 and Number 4 pylons.

**Corrective Actions**

(b) If any missing, damaged, or broken taperlock bolt is detected during any inspection required by paragraph (a) of this AD, prior to further flight, perform the applicable corrective actions (i.e., inspection, drill/ream, and replacement) in accordance with Boeing Alert Service Bulletin 747–57A2308, dated August 6, 1998; except as provided in paragraph (c) of this AD. Replacement of any taperlock bolt with a new bolt in accordance with this paragraph constitutes terminating action for the repetitive inspections required by paragraph (a) of this AD for that bolt only.

(c) If any crack is detected during the inspection required by paragraph (b) of this AD and the damage to a bolt hole exceeds first oversize (for 0.5-inch bolts) or second oversize (for 0.4375-inch bolts); and the service bulletin specifies to contact Boeing for appropriate Action: Prior to further flight, repair in accordance with a method approved by the Manager, Seattle Aircraft Certification Office (ACO), FAA, Transport Airplane Directorate; or in accordance with a Boeing Company Designated Engineering Representative who has been authorized by the Manager, Seattle ACO, to make such findings. For a repair method to be approved by the Manager, Seattle ACO, as required by this paragraph, the Manager's approval letter must specifically reference this AD.

**Terminating Action**

(d) Within 48 months after the effective date of this AD, accomplish the actions required by paragraphs (d)(1) and (d)(2) of this AD in accordance with Boeing Alert Service Bulletin 747–57A2308, dated August 6, 1998. Accomplishment of the actions specified in this paragraph constitutes terminating action for the repetitive inspection requirements of this AD.

(1) Prior to accomplishing the replacement required by paragraph (d)(2) of this AD, perform an open hole high frequency eddy current inspection to detect cracks at the bolt hole locations of the aft 10 taperlock bolts. If any cracking is detected, prior to further flight, perform applicable corrective actions in accordance with paragraph (c) of this AD.

(2) Replace the aft 10 taperlock bolts with new bolts in the diagonal brace underwing fitting at the Number 1 and Number 4 pylons.

**Spares**

(e) As of the effective date of this AD, no person shall install a bolt, part number BACB30PE( ) * ( ), or any other bolt made of 4340, 8740, or PH13–8 Mo steel, in the locations specified in this AD, on any airplane.

**Alternate Method of Compliance**

(f) An alternative method of compliance or adjustment of the compliance time that provides an acceptable level of safety may be used if approved by the Manager, Seattle ACO. Operators shall submit their requests through an appropriate FAA Principal Maintenance Inspector, who may add comments and then send it to the Manager, Seattle ACO.

**Note 3:** Information concerning the existence of approved alternative methods of compliance with this AD, if any, may be obtained from the Seattle ACO.

**Special Flight Permits**

(g) Special flight permits may be issued in accordance with sections 21.197 and 21.199 of the Federal Aviation Regulations (14 CFR 21.197 and 21.199) to operate the airplane to a location where the requirements of this AD can be accomplished.

Issued in Renton, Washington, on August 24, 1999.

**Vi L. Lipski,**

*Acting Manager, Transport Airplane Directorate, Aircraft Certification Service.*

[FR Doc. 99–22529 Filed 8–30–99; 8:45 am]

BILLING CODE 4910–13–P

---

## DEPARTMENT OF TRANSPORTATION

## Federal Aviation Administration

## 14 CFR Part 39

**[Docket No. 98–NM–300–AD]**

**RIN 2120–AA64**

## Airworthiness Directives; Mitsubishi Model YS–11 and YS–11A Series Airplanes

**AGENCY:** Federal Aviation Administration, DOT.

**ACTION:** Notice of proposed rulemaking (NPRM).

**SUMMARY:** This document proposes the adoption of a new airworthiness directive (AD) that is applicable to all Mitsubishi Model YS–11 and YS–11A series airplanes. This proposal would require repetitive removal of the spinner; repetitive detailed visual inspections of the propeller hub to detect fatigue cracking; and replacement of a propeller hub with a new propeller hub, if necessary. This proposal is prompted by issuance of mandatory continuing airworthiness information by a foreign civil airworthiness authority. The actions specified by the proposed AD are intended to detect and correct fatigue cracking of the propeller hub, which could cause the loss of the propeller.

**DATES:** Comments must be received by September 30, 1999.

**ADDRESSES:** Submit comments in triplicate to the Federal Aviation Administration (FAA), Transport Airplane Directorate, ANM–114,

Attention: Rules Docket No. 98–NM–300–AD, 1601 Lind Avenue, SW., Renton, Washington 98055–4056. Comments may be inspected at this location between 9:00 a.m. and 3:00 p.m., Monday through Friday, except Federal holidays.

The service information referenced in the proposed rule may be obtained from Nihon Aeroplane Manufacturing, Toranomon Daiichi, Kotohire-Cho, Shiba, Minato-Ku, Tokyo, Japan. This information may be examined at the FAA, Transport Airplane Directorate, 1601 Lind Avenue, SW., Renton, Washington; or at the FAA, Transport Airplane Directorate, Los Angeles Aircraft Certification Office, 3960 Paramount Boulevard, Lakewood, California.

**FOR FURTHER INFORMATION CONTACT:** Jon Mowery, Aerospace Engineer, Airframe Branch, ANM–120L, FAA, Transport Airplane Directorate, Los Angeles Aircraft Certification Office, 3960 Paramount Boulevard, Lakewood, California 90712–4137; telephone (562) 627–5322; fax (562) 627–5210.

**SUPPLEMENTARY INFORMATION:**

## Comments Invited

Interested persons are invited to participate in the making of the proposed rule by submitting such written data, views, or arguments as they may desire. Communications shall identify the Rules Docket number and be submitted in triplicate to the address specified above. All communications received on or before the closing date for comments, specified above, will be considered before taking action on the proposed rule. The proposals contained in this notice may be changed in light of the comments received.

Comments are specifically invited on the overall regulatory, economic, environmental, and energy aspects of the proposed rule. All comments submitted will be available, both before and after the closing date for comments, in the Rules Docket for examination by interested persons. A report summarizing each FAA-public contact concerned with the substance of this proposal will be filed in the Rules Docket.

Commenters wishing the FAA to acknowledge receipt of their comments submitted in response to this notice must submit a self-addressed, stamped postcard on which the following statement is made: ''Comments to Docket Number 98–NM–300–AD.'' The postcard will be date stamped and returned to the commenter.

## Availability of NPRMs

Any person may obtain a copy of this NPRM by submitting a request to the FAA, Transport Airplane Directorate, ANM–114, Attention: Rules Docket No. 98–NM–300–AD, 1601 Lind Avenue, SW., Renton, Washington 98055–4056.

## Discussion

The Japan Civil Aviation Bureau (JCAB), which is the airworthiness authority for Japan, notified the FAA that an unsafe condition may exist on all Mitsubishi YS–11 and YS–11A series airplanes. The JCAB advises that cracking has been found on propeller hubs. This cracking has been attributed to material fatigue. This condition, if not corrected, could result in the loss of the propeller.

The JCAB has issued Japanese airworthiness directive TCD–4667–97, dated October 13, 1997, which describes procedures for repetitive removal of the spinner; repetitive detailed visual inspections to detect fatigue cracking of the propeller hub; and replacement of cracked propeller hubs with new propeller hubs, if necessary. The JCAB classified these actions as mandatory in order to assure the continued airworthiness of these airplanes in Japan.

## FAA's Conclusions

These airplane models are manufactured in Japan and are type certificated for operation in the United States under the provisions of section 21.29 of the Federal Aviation Regulations (14 CFR 21.29) and the applicable bilateral airworthiness agreement. Pursuant to this bilateral airworthiness agreement, the JCAB has kept the FAA informed of the situation described above. The FAA has examined the findings of the JCAB, reviewed all available information, and determined that AD action is necessary for products of this type design that are certificated for operation in the United States.

## Explanation of Requirements of Proposed Rule

Since an unsafe condition has been identified that is likely to exist or develop on other airplanes of the same type design registered in the United States, the proposed AD would require accomplishment of the actions specified in the Japanese airworthiness directive described previously.

## Differences Between Proposed Rule and Foreign Airworthiness Directive

The proposed AD would differ from the parallel Japanese airworthiness directive in that it would require accomplishment of the inspection within 25 flight hours or 30 days after the effective date of this AD, whichever occurs first. The parallel Japanese airworthiness directive requires accomplishment of the inspection prior to further flight, unless an inspection was performed within 25 flight hours before the effective date of the Japanese airworthiness directive. In developing an appropriate compliance time for this AD, the FAA considered not only the safety implications, but the Japanese airworthiness authority's requirements, the availability of required parts, and the practical aspect of accomplishing the inspection within an interval of time that parallels normal scheduled maintenance for affected operators. The FAA also considered the fact that the Japanese airworthiness directive (containing the procedures for accomplishing the required actions) has been available to all operators of Mitsubishi Model YS–11 and YS–11A series airplanes since October 1997. Therefore, U.S. operators have had ample time since then to consider initiating those actions, which this proposed AD ultimately mandates.

## Cost Impact

The FAA estimates that 25 airplanes of U.S. registry would be affected by this proposed AD, that it would take approximately 32 work hours per airplane to accomplish the proposed inspection, and that the average labor rate is $60 per work hour. Based on these figures, the cost impact of the proposed AD on U.S. operators is estimated to be $48,000, or $1,920 per airplane, per inspection cycle.

The cost impact figure discussed above is based on assumptions that no operator has yet accomplished any of the proposed requirements of this AD action, and that no operator would accomplish those actions in the future if this AD were not adopted.

## Regulatory Impact

The regulations proposed herein would not have substantial direct effects on the States, on the relationship between the national government and the States, or on the distribution of power and responsibilities among the various levels of government. Therefore, in accordance with Executive Order 12612, it is determined that this proposal would not have sufficient federalism implications to warrant the preparation of a Federalism Assessment.

For the reasons discussed above, I certify that this proposed regulation (1) is not a ''significant regulatory action'' under Executive Order 12866; (2) is not a ''significant rule'' under the DOT

Regulatory Policies and Procedures (44 FR 11034, February 26, 1979); and (3) if promulgated, will not have a significant economic impact, positive or negative, on a substantial number of small entities under the criteria of the Regulatory Flexibility Act. A copy of the draft regulatory evaluation prepared for this action is contained in the Rules Docket. A copy of it may be obtained by contacting the Rules Docket at the location provided under the caption **ADDRESSES**.

## List of Subjects in 14 CFR Part 39

Air transportation, Aircraft, Aviation safety, Safety.

## The Proposed Amendment

Accordingly, pursuant to the authority delegated to me by the Administrator, the Federal Aviation Administration proposes to amend part 39 of the Federal Aviation Regulations (14 CFR part 39) as follows:

## PART 39—AIRWORTHINESS DIRECTIVES

1. The authority citation for part 39 continues to read as follows:

**Authority:** 49 U.S.C. 106(g), 40113, 44701.

### § 39.13 [Amended]

2. Section 39.13 is amended by adding the following new airworthiness directive:

**Mitsubish Heavy Industries, Ltd.:** Docket 98–NM–300–AD.

*Applicability:* All Model YS–11 and YS–11A series airplanes, certificated in any category.

**Note 1:** This AD applies to each airplane identified in the preceding applicability provision, regardless of whether it has been modified, altered, or repaired in the area subject to the requirements of this AD. For airplanes that have been modified, altered, or repaired so that the performance of the requirements of this AD is affected, the owner/operator must request approval for an alternative method of compliance in accordance with paragraph (b) of this AD. The request should include an assessment of the effect of the modification, alteration, or repair on the unsafe condition addressed by this AD; and, if the unsafe condition has not been eliminated, the request should include specific proposed actions to address it.

*Compliance:* Required as indicated, unless accomplished previously.

To detect and correct fatigue cracking of the propeller hub, which could cause the loss of the propeller, accomplish the following:

**Inspection and Replacement**

(a) Within 25 flight hours or 30 days after the effective date of this AD, whichever occurs first, remove the spinner and perform a detailed visual inspection for cracking of the propeller hub in the crack area shown in Figure 1 of this AD.

**Note 2:** For the purposes of this AD, a detailed visual inspection is defined as: ''An intensive visual examination of a specific structural area, system, installation, or assembly to detect damage, failure, or irregularity. Available lighting is normally supplemented with a direct source of good lighting at intensity deemed appropriate by the inspector. Inspection aids such as mirror, magnifying lenses, etc., may be used. Surface cleaning and elaborate access procedures may be required.''

(1) If no crack is found, repeat the actions required by paragraph (a) of this AD thereafter at intervals not to exceed 25 flight hours.

(2) If any crack is detected, prior to further flight, replace the hub with a new hub. Repeat the actions required by paragraph (a) of this AD thereafter at intervals not to exceed 25 flight hours.

**Alternative Methods of Compliance**

(b) An alternative method of compliance or adjustment of the compliance time that provides an acceptable level of safety may be used if approved by the Manager, Los Angeles Aircraft Certification Office (ACO), FAA, Transport Airplane Directorate. Operators shall submit their requests through an appropriate FAA Principal Maintenance Inspector, who may add comments and then send it to the Manager, Los Angeles ACO.

**Note 3:** Information concerning the existence of approved alternative methods of compliance with this AD, if any, may be obtained from the Los Angeles ACO.

**Special Flight Permits**

(c) Special flight permits may be issued for non-revenue bearing flights with essential crew only in accordance with sections 21.197 and 21.199 of the Federal Aviation Regulations (14 CFR 21.197 and 21.199) to operate the airplane to a location where the requirements of this AD can be accomplished.

**Note 4:** The subject of this AD is addressed in Japanese airworthiness directive TCD–4667–97, dated October 13, 1997.

BILLING CODE 4910–13–P

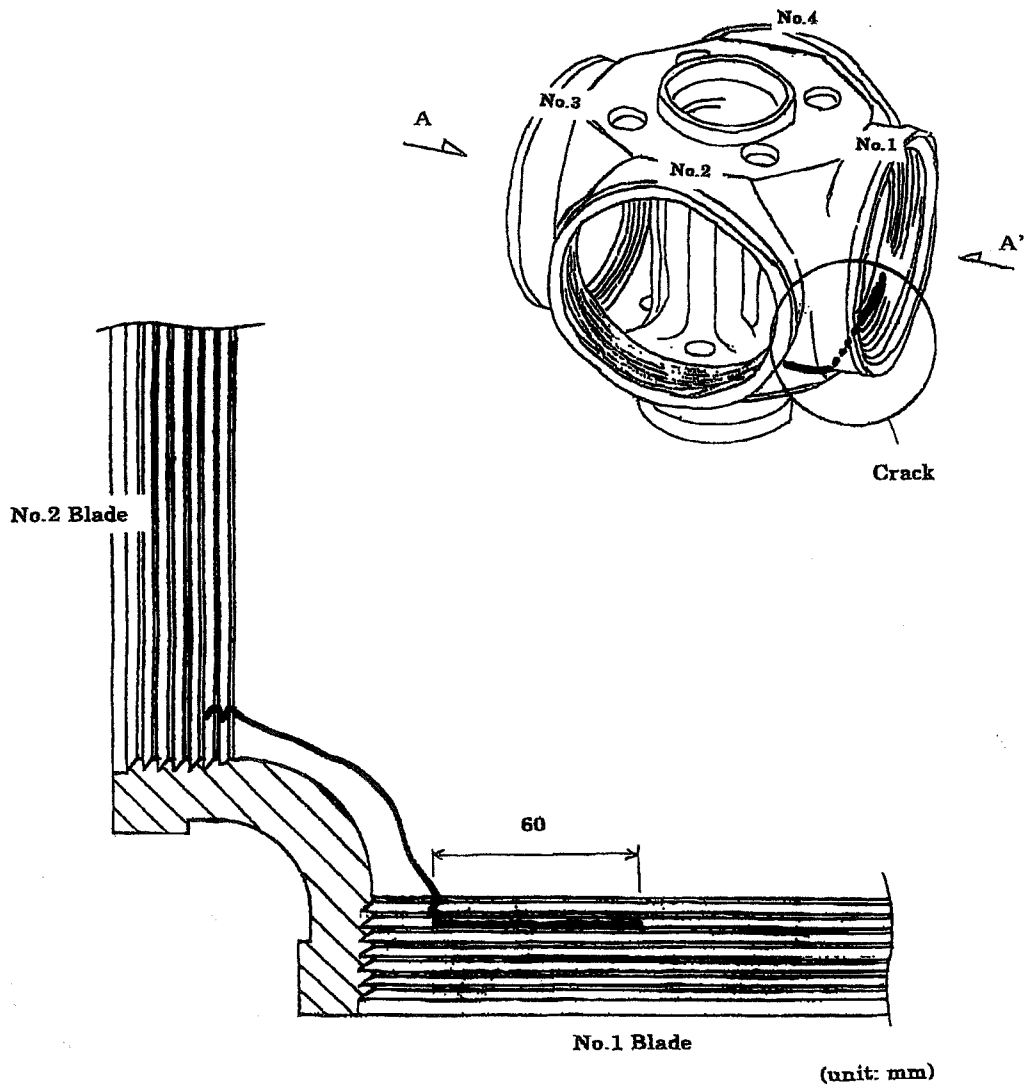


Figure 1 (Sheet 1 of 2)

**HUB CRACK - VIEW FROM TOP**

(Cut A – A')

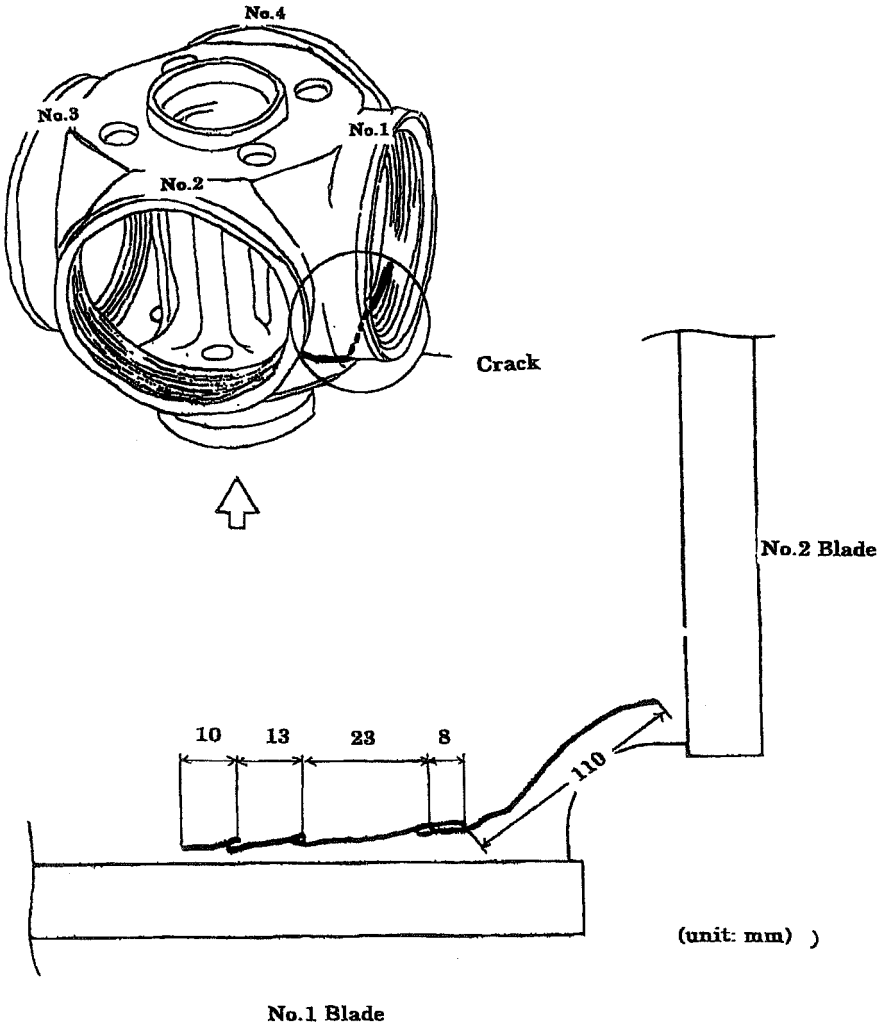


Figure 1 (Sheet 2 of 2)

**HUB CRACK - VIEW FROM BOTTOM**

Issued in Renton, Washington, on August 24, 1999.

**Vi L. Lipski,**

*Acting Manager, Transport Airplane Directorate, Aircraft Certification Service.*

[FR Doc. 99–22528 Filed 8–30–99; 8:45 am]

BILLING CODE 4910–13–C

**DEPARTMENT OF TRANSPORTATION**

**Federal Aviation Administration**

**14 CFR Part 39**

**[Docket No. 94–ANE–16]**

**RIN 2120–AA64**

## Airworthiness Directives; Rolls-Royce, plc. RB211 Series Turbofan Engines

**AGENCY:** Federal Aviation Administration, DOT.

**ACTION:** Notice of proposed rulemaking (NPRM).

**SUMMARY:** This document proposes the supersedure of an existing airworthiness directive (AD), applicable to certain Rolls-Royce, plc. (R–R) RB211 series turbofan engines, that currently requires removing from service intermediate pressure (IP) compressor stage 6–7 rotor shafts that exceed reduced cyclic life limits. This action would further reduce cyclic life limits and introduce new reduced cyclic bands for rework. This proposal is prompted by additional stress analysis conducted following failure of an IP compressor stage 6 disk. The actions specified by the proposed AD are intended to prevent an uncontained engine failure due to rupture of an IP compressor stage 6–7 rotor shaft.

**DATES:** Comments must be received by November 1, 1999.

**ADDRESSES:** Submit comments in triplicate to the Federal Aviation Administration (FAA), New England Region, Office of the Regional Counsel, Attention: Rules Docket No. 94–ANE–16, 12 New England Executive Park, Burlington, MA 01803–5299. Comments may also be sent via the Internet using the following address: ''9-ane-adcomment@faa.gov''. Comments sent via the Internet must contain the docket number in the subject line. Comments may be inspected at this location between 8:00 a.m. and 4:30 p.m., Monday through Friday, except Federal holidays.

The service information referenced in the proposed rule may be obtained from Rolls-Royce, plc, Technical Publications Department, P.O. Box 31, Derby, England. This information may be examined at the FAA, New England Region, Office of the Regional Counsel, 12 New England Executive Park, Burlington, MA.

**FOR FURTHER INFORMATION CONTACT:** Jason Yang, Aerospace Engineer, Engine Certification Office, FAA, Engine and Propeller Directorate, 12 New England Executive Park, Burlington, MA 01803–5299; telephone (781) 238–7747, fax (781) 238–7199.

**SUPPLEMENTARY INFORMATION:**

### Comments Invited

Interested persons are invited to participate in the making of the proposed rule by submitting such written data, views, or arguments as they may desire. Communications should identify the Rules Docket number and be submitted in triplicate to the address specified above. All communications received on or before the closing date for comments, specified above, will be considered before taking action on the proposed rule. The proposals contained in this notice may be changed in light of the comments received.

Comments are specifically invited on the overall regulatory, economic, environmental, and energy aspects of the proposed rule. All comments submitted will be available, both before and after the closing date for comments, in the Rules Docket for examination by interested persons. A report summarizing each FAA-public contact concerned with the substance of this proposal will be filed in the Rules Docket.

Commenters wishing the FAA to acknowledge receipt of their comments submitted in response to this proposal must submit a self-addressed, stamped postcard on which the following statement is made: ''Comments to Docket Number 94–ANE–16.'' The postcard will be date stamped and returned to the commenter.

### Availability of NPRMs

Any person may obtain a copy of this NPRM by submitting a request to the FAA, New England Region, Office of the Regional Counsel, Attention: Rules Docket No. 94–ANE–16, 12 New England Executive Park, Burlington, MA 01803–5299.

### Discussion

On September 1, 1994, the Federal Aviation Administration (FAA) issued airworthiness directive (AD) 94–18–03, Amendment 39–9016 (59 FR 46536, September 9, 1994), applicable to Rolls-Royce, plc (R–R) RB211–22B and –524 series turbofan engines, to require removing from service intermediate pressure (IP) compressor stage 6–7 rotor shafts that exceed reduced cyclic life limits. That action was prompted by information from the Civil Aviation Authority (CAA) of the United Kingdom (UK), which advised the Federal Aviation Administration (FAA) that they received a report of an uncontained failure of an IP compressor stage 6–7 rotor shaft installed in an R–R RB211–22B engine that failed during takeoff roll. Investigation determined that the failure has been caused by a crack which emanated from a corrosion pit and extended radially inward from the bolt holes to the rotor shaft diaphragm. The manufacturer, R–R, determined that the rotor shaft would not reach its published life limit without cracking under normal operating conditions.

Since the issuance of that AD, R–R performed refined stress and critical parts lifing analyses that revealed the cyclic life limits for affected IP compressor stage 6–7 rotor shafts must be further reduced. The affected rotor shafts include both reworked and non-reworked IP compressor stage 6–7 rotor shafts. R–R also introduced a new rework bands to rework the existing rotor shafts.

R–R has issued Service Bulletin (SB) No. RB.211–72–C538, dated January 14, 1999, that specifies reduced cyclic life limits for IP compressor stage 6–7 rotor shafts and reduced cyclic bands for rework. To extend the life of the existing rotor shafts, R–R has issued SB RB.211–72–9594, Revision 5, dated February 12, 1993, that specifies rework of the IP compressor stage 6–7 rotor shaft when the cyclic life falls within the rework bands described in the SB. Rework of the rotor shafts includes machining out corrosion and creating new bolt holes between the previous holes. The SB specifies a two-stage life reduction for the affected rotor shafts, removing certain high cycle time disks by the end of the calendar year 2000 prior to the removal of all disks from the fleet by the end of calendar year 2001. The CAA classified SB No. RB.211–72–C538 as mandatory and issued AD 003–01–99 in order to assure the airworthiness of these engines in the UK.

This engine model is manufactured in the UK and is type certificated for operation in the United States under the provisions of Section 21.29 of the Federal Aviation Regulations (14 CFR 21.29) and the applicable bilateral airworthiness agreement. Pursuant to this bilateral airworthiness agreement, the CAA has kept the FAA informed of the situation described above. The FAA has examined the findings of the CAA, reviewed all available information, and determined that AD action is necessary for products of this type design that are certificated for operation in the United States.

Since an unsafe condition has been identified that is likely to exist or develop on other products of the same type design, the proposed AD would supersede AD 94–18–03 to specify reduced cyclic life limits for IP

compressor stage 6–7 rotor shafts and to introduce reduced cyclic bands for rework. Rework of IP compressor stage 6–7 rotor shafts in accordance with R–R SB No. RB.211 72–9594, or SB No. RB.211–72–9618 enables the parts to achieve their full, assigned cyclic life limits. This AD is not applicable to those engines that incorporate new intermediate pressure (IP) compressor stage 6–7 rotor shafts assemblies with redesigned stage 6 disks in accordance with R–R SB No. RB.211–72–9993, dated August 26, 1994.

Based on a risk analysis performed by the manufacturer, which considers corrosion as one factor bearing on this condition, the AD proposes a two-stage life reduction for the affected rotor shafts, removing certain high cycle time disks by the end of the calendar year 2000, prior to the removal of all disks from the fleet by the end of calendar year 2001.

There are approximately 1,300 engines of the affected design in the worldwide fleet. The manufacturer has advised the FAA that there are 228 engines installed on aircraft of U.S. registry that would be affected by this proposed AD. It would take approximately 24 work hours or $1,440 per engine to accomplish the proposed rework actions, if rework of the rotor shafts was selected. Otherwise, to maintain the record of the cyclic life of IP compressor stage 6–7 rotor shafts has minimum economic impact to U.S operators. Based on these figures, the total cost impact of the proposed AD on U.S. operators is estimated to be less than $330,000.

The regulations proposed herein would not have substantial direct effects on the States, on the relationship between the national government and the States, or on the distribution of power and responsibilities among the various levels of government. Therefore, in accordance with Executive Order 12612, it is determined that this proposal would not have sufficient federalism implications to warrant the preparation of a Federalism Assessment.

For the reasons discussed above, I certify that this proposed regulation (1) is not a ''significant regulatory action'' under Executive Order 12866; (2) is not a ''significant rule'' under the DOT Regulatory Policies and Procedures (44 FR 11034, February 26, 1979); and (3) if promulgated, will not have a significant economic impact, positive or negative, on a substantial number of small entities under the criteria of the Regulatory Flexibility Act. A copy of the draft regulatory evaluation prepared for this action is contained in the Rules Docket. A copy of it may be obtained by contacting the Rules Docket at the location provided under the caption **ADDRESSES**.

## List of Subjects in 14 CFR Part 39

Air transportation, Aircraft, Aviation safety, Safety.

## The Proposed Amendment

Accordingly, pursuant to the authority delegated to me by the Administrator, the Federal Aviation Administration proposes to amend part 39 of the Federal Aviation Regulations (14 CFR part 39) as follows:

## PART 39—AIRWORTHINESS DIRECTIVES

1. The authority citation for part 39 continues to read as follows:

**Authority:** 49 U.S.C. 106(g), 40113, 44701.

### § 39.13 [Amended]

2. Section 39.13 is amended by removing amendment 39–9016 (59 FR 46536, September 9, 1994) and by adding a new airworthiness directive to read as follows:

**Rolls-Royce, plc:** Docket No. 94–ANE–16. Supersedes AD 94–18–03, Amendment 39–9016.

*Applicability:* Rolls-Royce plc (R–R) Model RB211–22B and –524 series turbofan engines, not incorporating new intermediate pressure (IP) compressor stage 6–7 rotor shafts assemblies with redesigned stage 6 disks in accordance with R–R Service Bulletin (SB) No. RB.211–72–9993, dated August 26, 1994. These engines are installed on but not limited to Boeing 747 series and 767 series, and Lockheed L–1011 series aircraft.

**Note 1:** This airworthiness directive (AD) applies to each engine identified in the preceding applicability provision, regardless of whether it has been modified, altered, or repaired in the area subject to the requirements of this AD. For engines that have been modified, altered, or repaired so that the performance of the requirements of this AD is affected, the owner/operator must request approval for an alternative method of compliance in accordance with paragraph (d) of this AD. The request should include an assessment of the effect of the modification, alteration, or repair on the unsafe condition addressed by this AD; and, if the unsafe condition has not been eliminated, the request should include specific proposed actions to address it.

*Compliance:* Required as indicated, unless accomplished previously.

To prevent an uncontained engine failure due to rupture of an IP compressor stage 6–7 rotor shaft, accomplish the following:

(a) For IP compressor stage 6–7 rotor shafts that have not been reworked in accordance with SB RB.211–72–9594, Revision 8, dated January 14, 1999, Revision 7, dated September 16, 1994, Revision 6, dated August 12, 1994, or Revision 5, dated February 12, 1993, remove the rotor shafts prior to exceeding the life limits established in Table 1 of this AD under subtitle ''Pre SB 72–9594,'' and replace with serviceable parts.

TABLE 1

| Engine mark and mod standard | Pre SB72–9594 | | | Rework bands | | | Post SB72–9594 | | | Post SB72–9618 | | |
|---|---|---|---|---|---|---|---|---|---|---|---|---|
| | Life limits through 12/31/00 | Life limits after 12/31/00 | Life limits after 12/31/01 | Rework bands through 12/31/00 | Rework bands after 12/31/00 | Rework bands after 12/31/01 | Life limits through 12/31/00 | Life limits after 12/31/00 | Life limits after 12/31/01 | Life limits through 12/31/00 | Life limits after 12/31/00 | Life limits after 12/31/01 |
| RB.211–22B–02, Pre SB72–5787 and Pre SB72–8700 | 11000 | 10000 | 9000 | 8000–11000 | 7500–10000 | 7500–9000 | 18000 | 17600 | 16600 | N/A | N/A | N/A |
| RB.211–22B–02, Pre SB72–5787, and Post SB72–8700 | 11000 | 10000 | 10000 | 8000–11000 | 7500–10000 | 7500–10000 | 17310 | 16960 | 15960 | N/A | N/A | N/A |
| RB.211–22B–02, Post SB72–5787, and Pre SB72–8700 | 11000 | 11000 | 11000 | 8000–11000 | 8000–11000 | 8000–11000 | 18000 | 18000 | 18000 | N/A | N/A | N/A |
| RB.211–22B–02, Post SB72–5787 and Post SB72–8700 | 11000 | 11000 | 11000 | 8000–11000 | 8000–11000 | 8000–11000 | 17310 | 17310 | 17310 | N/A | N/A | N/A |
| RB.211–524B–02, RB.211–524B3–02, RB.211–524B4–02, Pre SB72–5787 | 7500 | 7250 | 6250 | 6000–7500 | 4750–7250 | 4750–6250 | 13500 | 13500 | 12750 | 17500 | 17500 | 17500 |
| RB.211–524B–02, RB.211–524B3–02, RB.211–524B4–02, Post SB72–5787 | 8500 | 8200 | 7200 | 6500–8500 | 5700–8200 | 5700–7200 | 15000 | 14700 | 13700 | 19000 | 19000 | 18000 |
| RB.211–524B–B–02, RB.211–524B4–D–02, Pre SB72–5787 | 7500 | 7500 | 7400 | 6000–7500 | 6000–7500 | 5500–7400 | 13500 | 13500 | 13500 | 17500 | 17500 | 17500 |

TABLE 1—Continued

| Engine mark and mod standard | Pre SB72–9594 | | | Rework bands | | | Post SB72–9594 | | | Post SB72–9618 | | |
|---|---|---|---|---|---|---|---|---|---|---|---|---|
| | Life limits through 12/31/00 | Life limits after 12/31/00 | Life limits after 12/31/01 | Rework bands through 12/31/00 | Rework bands after 12/31/00 | Rework bands after 12/31/01 | Life limits through 12/31/00 | Life limits after 12/31/00 | Life limits after 12/31/01 | Life limits through 12/31/00 | Life limits after 12/31/00 | Life limits after 12/31/01 |
| RB.211–524B—B02, RB.211–524B4–D–02, Post SB72–5787 | 8500 | 8200 | 7200 | 6500–8500 | 5700–8200 | 5700–7200 | 15000 | 14700 | 13700 | 19000 | 19000 | 18000 |
| RB.211–524B2, RB.211–524C2, RB211–524D4, RB211–524D4X, Pre SB72–5787 | 7500 | 7500 | 7300 | 6000–7500 | 6000–7500 | 5800–7300 | 13500 | 13500 | 13500 | 17500 | 17500 | 17500 |
| RB.211–524B2, RB.211–524C2, RB211–524D4, RB211–524D4X, Post SB72–5787 | 8500 | 8250 | 7250 | 6500–8500 | 5800–8250 | 5800–7250 | 15000 | 14500 | 13500 | 19000 | 18750 | 17750 |
| RB.211–524B2–B, RB.211–524C2–B, Pre SB72–5787 | 7500 | 7500 | 7300 | 6000–7500 | 6000–7500 | 5800–7300 | 13500 | 13500 | 13500 | 17500 | 17500 | 17500 |
| RB.211–524B2–B, RB.211–524C2–B, Post SB72–5787 | 8500 | 8200 | 7250 | 6500–8500 | 5800–8200 | 5800–7250 | 15000 | 14500 | 13500 | 19000 | 18650 | 17650 |
| RB.211–524D4–B, RB.211–524D4X–B, Post SB72–5787 | 8500 | 8500 | 7750 | 6500–8500 | 6500–8500 | 5750–7750 | 15000 | 15000 | 15000 | 19000 | 19000 | 19000 |
| RB.211–524G, RB.211–524G–T, RB.211–524H, RB.211–524H–T, Post SB72–5787 | 8500 | 8150 | 7150 | 6500–8500 | 5750–8150 | 5750–7150 | 13950 | 13950 | 13950 | N/A | N/A | N/A |

(b) Remove from service IP stage 6–7 rotor shafts that have been reworked in accordance with R–R SB RB.211–72–9594, Revision 8, dated January 14, 1999, Revision 7, dated September 16, 1994, Revision 6, dated August 12, 1994, or Revision 5, dated February 12, 1993, prior to exceeding the new, reduced cyclic life listed in Table 1 of this AD under the sub-title ''Post SB72–9594'' and replace with serviceable part.

(c) Remove from service IP compressor stage 6–7 rotor shafts that have been reworked in accordance with R–R SB RB.211–72–9618, dated August 7, 1992, prior to exceeding the new, reduced cyclic life limits listed in Table 1 of this AD under the sub–title ''Post SB72-9618,'' and replace with serviceable parts.

(d) IP compressor stage 6–7 rotor shaft rework in accordance with R–R SB RB.211–72–9594 can only be accomplished when the cyclic life of the part falls within the rework bands established in the Table 1 of this AD. To accomplish rework of IP compressor stage 6–7 rotor prior to reaching the lower limit of the rework bands specified in the Table 1 of this AD, the part must be artificially aged to the cyclic life which defines the lower limit of the applicable rework bands in Table 1 of this AD.

**Note 2:** For example, if the lower limit of the rework band is 8,000 cycles, and the part is reworked at 7,000 cycles, the part must be artificially aged by adding 1,000 cycles to the cycles since new recorded on the part; i.e., on return to service the cycles since new on this part would be 8,000 cycles.

(e) An alternative method of compliance or adjustment of the compliance time that provides an acceptable level of safety may be used if approved by the Manager, Engine Certification Office. Operators shall submit their request through an appropriate FAA Principal Maintenance Inspector, who may add comments and then send it to the Manager, Engine Certification Office.

**Note 3:** Information concerning the existence of approved alternative methods of compliance with this airworthiness directive, if any, may be obtained from the Engine Certification Office.

(f) Special flight permits may be issued in accordance with sections 21.197 and 21.199 of the Federal Aviation Regulations (14 CFR 21.197 and 21.199) to operate the aircraft to a location where the requirements of this AD can be accomplished.

Issued in Burlington, Massachusetts, on August 25, 1999.

**David A. Downey,**

*Assistant Manager, Engine and Propeller Directorate, Aircraft Certification Service.*

[FR Doc. 99–22562 Filed 8–30–99; 8:45 am]

BILLING CODE 4910–13–U

---

## DEPARTMENT OF TRANSPORTATION

## Federal Aviation Administration

## 14 CFR Part 71

**[Airspace Docket No. 99–ANM–01]**

## Proposed Revision of Class E Airspace, Lewiston, ID; Proposed Establishment of Class E Airspace, Grangeville, ID

**AGENCY:** Federal Aviation Administration (FAA), DOT.

**ACTION:** Notice of proposed rulemaking (NPRM).

**SUMMARY:** This proposal would amend the Lewiston, ID, Class E area and establish additional controlled airspace at Grangeville, ID, to accommodate the development of new Standard Instrument Approach Procedures (SIAP) utilizing the Global Positioning System (GPS) at the Idaho County Airport, Grangeville, ID.

**DATES:** Comments must be received on or before October 15, 1999.

**ADDRESSES:** Send comments on the proposal in triplicate to: Manager, Airspace Branch, ANM–520, Federal Aviation Administration, Docket No. 99–ANM–01, 1601 Lind Avenue SW, Renton, Washington 98055–4056.

The official docket may be examined in the office of the Assistant Chief Counsel for the Northwest Mountain Region at the same address.

An informal docket may also be examined during normal business hours in the officer of the Manager, Air Traffic Division, Airspace Branch, at the address listed above.

**FOR FURTHER INFORMATION CONTACT:** Dennis Ripley, ANM–520.6, Federal Aviation Administration, Docket No. 99–ANM–01, 1601 Lind Avenue SW, Renton, Washington 98055–4056: telephone number: (425) 227–2527.

**SUPPLEMENTARY INFORMATION:**

### Comments Invited

Interested parties are invited to participate in this proposed rulemaking by submitting such written data, views, or arguments, as they may desire. Comments that provide the factual basis supporting the views and suggestions presented are particularly helpful in developing reasoned regulatory decisions on the proposal. Comments are specifically invited on the overall regulatory, aeronautical, economic, environmental, and energy related aspects of the proposal. Communications should identify the airspace docket number and be submitted in triplicate to the address listed above. Commenters wishing the FAA to acknowledge receipt of their

comments on this notice must submit, with those comments, a self-addressed stamped postcard on which the following state is made: ''Comments to Airspace Docket No. 99–ANM–01.'' The postcard will be date/time stamped and returned to the commenter. All communications received on or before the specified closing date for comments will be considered before taking action on the proposed rule. The proposal contained in this notice may be changed in the light of comments received. All comments submitted will be available for examination at the address listed above both before and after the closing date for comments. A report summarizing each substantive public contact with FAA personnel concerned with this rulemaking will be filed in the docket.

**Availability of NPRM's**

Any person may obtain a copy of this NPRM by submitting a request to the Federal Aviation Administration, Airspace Branch, ANM–520, 1601 Lind Avenue SW, Renton, Washington 98055–4056. Communications must identify the notice number of this NPRM. Persons interested in being placed on a mailing list for future NPRM's should also request a copy of Advisory Circular No. 11–2A, which describes the application procedure.

**The Proposal**

The FAA is considering an amendment to Title 14 Code of Federal Regulations, part 71 (14 CFR part 71) by revising Class E airspace at Lewiston, ID, and establishing Class E airspace at Grangeville, ID, in order to accommodate two new GPS SIAP's to the Idaho County Airport, Grangeville, ID. This amendment would provide additional airspace at Lewiston, ID, to encompass newly established waypoints in order to meet current criteria standards associated with SIAP holding patterns. This action also allows for the establishment of airspace at Grangeville, ID, providing controlled airspace for the final approach phase of flight for the newly established SIAP's. The FAA establishes Class E airspace where necessary to contain aircraft transitioning between the terminal and en route environments. The intended effects of this proposal is designed to provide for the safe and efficient use of the navigable airspace. This proposal would promote safe flight operations under Instrument Flight Rules (IFR) at the Idaho County Airport and between the terminal and en route transition stages.

The area would be depicted on aeronautical charts for pilot reference. The coordinates for this airspace docket are based on North American Datum 83. Class E airspace areas extending upward from 700 feet or more above the surface of the earth, are published Paragraph 6005, of FAA Order 7400.9F dated September 10, 1998, and effective September 16, 1998, which is incorporated by reference in 14 CFR 71.1. The Class E airspace designation listed in this document would be published subsequently in the Order.

The FAA has determined that this proposed regulation only involves an established body of technical regulations for which frequent and routine amendments are necessary to keep them operationally current. It, therefore, (1) is not a ''significant regulatory action'' under Executive Order 12866; (2) is not a ''significant rule'' under DOT Regulatory Policies and Procedures (44 FR 11034; February 26, 1979); and (3) does not warrant preparation of a Regulatory Evaluation as the anticipated impact is so minimal. Since this is a routine matter that will only affect air traffic procedures and air navigation, it is certified that this rule, when promulgated, will not have a significant economic impact on a substantial number of small entities under the criteria of the Regulatory Flexibility Act.

**List of Subjects in 14 CFR Part 71**

Airspace, Incorporation by reference, Navigation (air).

**The Proposed Amendment**

In consideration of the foregoing, the Federal Aviation Administration proposes to amend 14 CFR part 71 as follows:

## PART 71—DESIGNATION OF CLASS A, CLASS B, CLASS C, CLASS D, AND CLASS E AIRSPACE AREAS; AIRWAYS; ROUTES; AND REPORTING POINTS

1. The authority citation for 14 CFR part 71 continues to read as follows:

**Authority:** 49 U.S.C. 106(g), 40103, 40113, 40120; E.O. 10854, 24 FR 9565, 3 CFR, 1959–1963 Comp., p. 389.

**§ 71.1 [Amended]**

2. The incorporation by reference in 14 CFR 71.1 of the Federal Aviation Administration Order 7400.9F, Airspace Designations and Reporting Points, dated September 10, 1998, and effective September 16, 1998, is amended as follows:

*Paragraph 6005 Class E Airspace Areas Extending Upward From 700 Feet or More Above the Surface of the Earth.*

* * * * *

**ANM ID E5 Grangeville, ID [New]**

Idaho County Airport, Grangeville, ID
(Lat. 45°56′33″N., long. 116°07′27″W)

That airspace extending upward from 700 feet above the surface within a 9-mile radius of Idaho County Airport

* * * * *

**ANM ID E5 Lewiston, ID [Revised]**

Lewiston-Nez Perce County Airport, Lewiston, ID
(Lat. 46°22′28″N., long. 117°00′55″W)
Nez Perce VOR/DME
(Lat. 46°22′54″N., long. 116°52′10″W)
Walla Walla VOR/DME
(Lat. 46°05′13″N., long. 118°17′33″W)

That airspace extending upward 700 feet above the surface bounded by a line beginning at lat. 46°29′25″ No., long. 117°34′09″W; to lat. 46°30′45″ No., long. 117°00′49″W; to lat. 46°34′25″N, long. 117°04′44″W; thence via the 14.4-mile arc centered on the Nez Perce VOR/DME to lat. 46°27′00″N, long. 116°32′09″W; to lat. 46°25′30″N, long. 116°26′03″W; to lat. 46°13′20″N, long. 116°30′04″W; to lat. 46°14′33″N, long. 116°35′15″W; thence via the Nez Perce VOR/DME 14.4-mile arc to lat. 46°09′00″N, long. 116°46′54″W; to lat. 46°17′00″N, long. 116°49′14″W; to lat. 46°18′05″N. long. 117°00′15″W; to lat. 46°17′42″N, long. 117°22′04″W; to lat. 46°10′30″N, long. 117°26′24″W; to lat. 46°12′00″N, long. 117°35′44″W; north to point of beginning; that airspace extending upward from 1,200 feet above the surface bounded by a line beginning at lat. 46°00′00″N, long. 116°00′04″W; to lat. 46°00′00″N, long. 116°19′00″W; to lat. 45°39′00″N, long. 116°10′03″W; to lat. 45°30′00″N, long. 116°14′03″W; to lat. 45°23′00″N, long. 116°21′03″W; to lat. 45°25′00″N, long. 116°34′04″W; to lat. 45°30′00″N, long. 116°46′04″W; to lat. 46°00′00″N, long. 116°56′04″W; thence along the Walla Walla VOR/DME 16.6-mile radius, thence north along the Walla Walla VOR/DME 16.6-mile radius until intercepting V–536, thence northeast along V–536 and southeast along V–2 until intercepting long. 115°15′04″W, thence south along long. 115°15′04″W, until intercepting V–187, thence southeast along V–187 until intercepting long. 116°00′00″W, thence south along long. 116°00′00″W, to lat. 46°15′00″N; to lat. 46°00′00″N, long. 115°50′00″W, thence to the point of beginning; excluding all Federal airways.

* * * * *

Issued in Seattle, Washington, on August 16, 1999.

**George L. Orr,**

*Acting Manager, Air Traffic Division, Northwest Mountain Region.*

[FR Doc. 99–22612 Filed 8–30–99; 8:45 am]

BILLING CODE 4910–13–M

**DEPARTMENT OF TRANSPORTATION**

**Federal Aviation Administration**

**14 CFR Part 71**

**[Airspace Docket No. 99–AWP–16]**

## Proposed Establishment of Class E Airspace; Lakeport, CA

**AGENCY:** Federal Aviation Administration (FAA), DOT.

**ACTION:** Notice of proposed rulemaking.

**SUMMARY:** This notice proposes to establish a Class E airspace area on Lakeport, CA. The establishment of a Special Global Positioning System (GPS) Standard Instrument Approach Procedure (SIAP) Copter 293 Point In Space approach serving Sutter Lake Heliport has made this proposal necessary. Additional controlled airspace extending upward from 700 feet or more above the surface of the earth is needed to contain helicopters executing the Special Copter GPS 293 Point In Space approach to Sutter Lakeside Hospital Heliport. The intended effect of this proposal is to provide adequate controlled airspace for Instrument Flight Rules (IFR) operations at Sutter Lakeside Hospital Heliport, Lakeport, CA.

**DATES:** Comment must be received on or before September 16, 1999.

**ADDRESSES:** Send comments on the proposal in triplicate: Federal Aviation Administration, Attn: Manager, Airspace Branch, AWP–520, Docket No. 99–AWP–16, Air Traffic Division, 15000 Aviation Boulevard, Lawndale, California 90261.

The official docket may be examined in the Office of the Regional Counsel, Western-Pacific Region, Federal Aviation Administration, Room 6007, 15000 Aviation Boulevard, Lawndale, California, 90261.

An informal docket may be examined during normal business hours at the Office of the Manager, Airspace Branch, Air Traffic Division at the above address.

**FOR FURTHER INFORMATION CONTACT:** Larry Tonish, Air Traffic Airspace Specialist, Airspace Branch, AWP–520, Air Traffic Division, Western-Pacific Region, Federal Aviation Administration, 15000 Boulevard, Lawndale, California, 90261, telephone (310) 725–6539.

**SUPPLEMENTARY INFORMATION:**

### Comments Invited

Interested parties are invited to participate in this proposed rulemaking by submitting such written data, views, or arguments as they may desire. Comments that provide the factual basis supporting the views and suggestions presented helpful in developing reasoned regulatory decisions on the proposal. Comments are specifically invited on the overall regulatory, aeronautical, economic, environmental, and energy-related aspects of the proposal. Communications should identify the airspace docket number and may be submitted in triplicate to the address listed above. Commenters wishing the FAA to acknowledge receipt of their comments on this notice must submit with the comments a self-addressed, stamped postcard on which the following statement is made: ''Comments to Airspace Docket No. 99–AWP–16.'' The postcard will be date-time stamped and returned to the commenter. All communications received on or before the specified closing date for comments will be considered before taking action on the proposed rule. The proposal contained in this notice may be changed in light of comments received. All comments submitted will be available for examination in the Airspace Branch, Air Traffic Division, 15000 Boulevard, Lawndale, California, 90261, both before and after the closing date for comments. A report summarizing each substantive public contact with FAA personnel concerned with this rulemaking will be filed in the docket.

### Availability of NPRM

Any person may obtain a copy of this Notice of Proposed Rulemaking (NPRM) by submitting a request to the Federal Aviation Administration, Airspace Branch, 15000 Boulevard, Lawndale, California, 90261. Communications must identify the notice number of this NPRM. Persons interested in being placed on a mailing list for future NPRM's should also request a copy of Advisory Circular No. 11–2A, which describes the application procedures.

### The Proposal

The FAA is considering an amendment to 14 CFR part 71 by establishing a Class E airspace area at Lakeport, CA. The establishment of a Special Copter GPS 293 Point In Space approach at Sutter Lakeside Hospital Heliport has made this proposal necessary. Additional controlled airspace extending upward from 700 feet above the surface is needed to contain helicopters executing the Special Copter GPS 293 Point In Space approach to the Sutter Lakeside Hospital Heliport. The intended effect of this proposal is to provide adequate controlled airspace for helicopters executing the Special Copter 293 Point In Space approach to the Sutter Lakeside Hospital Heliport, Lakeport, CA. Class E airspace designations are published in paragraph 6005 of FAA Order 7400.9F dated September 10, 1998, and effective September 16, 1998, which is incorporated by reference in 14 CFR 71.1. The Class E airspace designation listed in this document would be published subsequently in this Order.

The FAA has determined that this proposed regulation only involves an established body of technical regulations for which frequent and routine amendments are necessary to keep them operationally current. Therefore, this proposed regulation—(1) is not a ''significant regulatory action'' under Executive Order 12866; (2) is not a ''significant rule'' under DOT Regulatory Policies and Procedures (44 FR 11034; February 26, 1979); and (3) does not warrant preparation of a Regulatory Evaluation as the anticipated impact is so minimal. Since this is a routine matter that will only affect air traffic procedures and air navigation, it is certified that this proposed rule would not have a significant economic impact on a substantial number of small entities under the criteria of the Regulatory Flexibility Act.

### List of Subjects in 14 CFR Part 71

Airspace, Incorporation by reference, Navigation (air)

### The Proposed Amendment

In consideration of the foregoing, the Federal Aviation Administration proposes to amend 14 CFR part 71 as follows:

## PART 71—DESIGNATION OF CLASS A, CLASS B, CLASS C, CLASS D, AND CLASS E AIRSPACE AREAS; ROUTES; AND REPORTING POINTS

1. The authority citation for 14 CFR part 71 continues to read as follows:

**Authority:** 49 U.S.C. 106(g), 40103, 40113, 40120; E.O. 10854, 24 FR 9565, 3 CFR, 1959–1963 Comp., p. 389.

**§ 71.1 [Amended]**

2. The incorporation by reference in 14 CFR 71.1 of the Federal Aviation Administration Order 7400.9F, Airspace Designations and Reporting Points, dated September 10, 1998, and effective September 16, 1998, is amended as follows:

*Paragraph 6005 Class E airspace areas extending upward from 700 feet or more above the surface of the earth*

* * * * *

**AWP CA E5 Lakeport, CA [New]**

Sutter Lakeside Hospital Heliport

Point In Space Coordinates
(Lat. 39°06′09″N, long. 122°53′19″W)

That airspace extending upward from 700 feet above the surface and within a 5-mile radius of a Point In Space serving the Sutter Lakeside Hospital Heliport, excluding that portion within the Santa Rosa, CA, Class E airspace area.

* * * * *

Issued In Los Angeles, California, on August 2, 1999.

**John Clancy,**

*Manager, All Traffic Division, Western-Pacific Region.*

[FR Doc. 99–22610 Filed 8–30–99; 8:45 am]

BILLING CODE 4910–13–M

## COMMODITY FUTURES TRADING COMMISSION

## 17 CFR Parts 3 and 32

## Trade Options on the Enumerated Agricultural Commodities

**AGENCY:** Commodity Futures Trading Commission.

**ACTION:** Proposed rulemaking.

**SUMMARY:** In April 1998, the Commodity Futures Trading Commission (Commission or CFTC) removed the prohibition on off-exchange trade options on the enumerated agricultural commodities subject to a number of regulatory requirements. The Commission has reconsidered several of these requirements with a view toward streamlining regulatory or paperwork burdens in order to increase agricultural trade option's commercial utility while maintaining basic customer protections. In particular, the Commission is proposing to streamline the registration requirements for Agricultural Trade Option Merchants (ATOMs) and their sales agents by, among other things, removing the training requirement for associated persons and limiting the number of principals that must certify that they are not subject to statutory disqualification from registration. In addition, the Commission is proposing to permit cash settlement and offset or cancellation of agricultural trade options, by removing the requirement that such options, if exercised, must result in physical delivery. The Commission is also proposing to eliminate the currently required transaction-specific disclosure statement and to revise the summary disclosure statement provided to customers when opening an account. The Commission is proposing to streamline certain reporting and recordkeeping requirements, as well.

**DATES:** Comments must be received by September 30, 1999.

**ADDRESSES:** Comments should be mailed to the Commodity Futures Trading Commission, Three Lafayette Centre, 1155 21st Street, NW., Washington, DC 20581, attention: Office of the Secretariat; transmitted by facsimile at (202) 418–5521; or transmitted electronically at [secretary@cftc.gov]. Reference should be made to ''Agricultural Trade Options.''

**FOR FURTHER INFORMATION CONTACT:** Paul M. Architzel, Chief Counsel, Division of Economic Analysis, Commodity Futures Trading Commission, Three Lafayette Centre, 1155 21st Street, NW., Washington, DC 20581, (202) 418–5260, or electronically at [PArchitzel@cftc.gov].

**SUPPLEMENTARY INFORMATION:**

### I. Background

Generally, the offer or sale of commodity options is prohibited except on designated contract markets. 17 CFR 32.11. One of several specified exceptions to the general prohibition on off-exchange options is for ''trade options.'' Trade options are off-exchange options ''offered by a person having a reasonable basis to believe that the option is offered to'' a person or entity within the categories of commercial users specified in the rule, where such commercial user ''is offered or enters into the commodity option transaction solely for purposes related to its business as such.'' 17 CFR 32.4(a). However, this exception from the general ban on off-exchange options does not apply to trade options on the agricultural commodities enumerated in the Commodity Exchange Act (Act).[1] 7 U.S.C. 1a(3).

In April, 1998, the Commission promulgated interim final rules to permit the trading of agricultural trade options subject to various regulatory requirements. 63 FR 18821 (April 16, 1998). These requirements were designed to provide a number of customer protections. They included provisions for registration of ATOMs, disclosure of risks to option buyers, financial safeguards, and recordkeeping. In addition, option vendors were required to have a system of internal controls and to report to the Commission on their option activity. The rules also included a number of provisions to discourage the use of trade options for speculative purposes. These included the requirement that agricultural trade options, if exercised, be physically delivered, and limitations on producers granting options, including prohibiting producers from writing covered call options.

No one has applied for registration as an ATOM since the interim rules went into effect in June, 1998. Reportedly, agricultural trade options are being offered to some extent pursuant to the rules' exemption for high net worth entities. However, because there are no reporting requirements for options offered pursuant to the exemption, the Commission cannot ascertain to what extent such options are being traded between exempt entities.

The current lack of interest in offering these instruments could well be a result of the current depressed prices for many commodities.[2] However, some observers have suggested a different explanation for the lack of interest in these instruments. Various agricultural groups have voiced concern that the interim

[1] In 1936, responding to a history of large price movements and disruptions in the futures markets attributed to speculative trading in options, Congress completely prohibited the offer or sales of option contracts both on and off exchange in the specific list of agricultural commodities enumerated in the Act. After its creation in 1974, the Commission promulgated a comprehensive regulatory framework applicable to off-exchange commodity option transactions in the non-enumerated commodities. This comprehensive framework exempted ''trade options'' from most of its provisions except for a rule prohibiting fraud (rule 32.9). In contrast, the prohibition on the offer and sale of all options on the enumerated agricultural commodities remained as a consequence of both statutory provision and Commission rule. The statutory bar was repealed as part of the Commission's reauthorization in 1982. Public Law No. 97–444, 96 Stat. 2294, 2301 (1983). A full statement of the statutory and regulatory history is provided in the notice of final rulemaking promulgating the interim final rules. 63 FR 18821 (April 16, 1998).

[2] In addition to low prices, lack of familiarity among many in the agricultural sector with risk management techniques generally and agricultural trade options, specifically, may also have hampered development of demand for trade option products. To address this, widespread educational efforts will be necessary to give producers a better understanding of what the instruments are and how to use them safely. To this end, the Commission recently released three educational pamphlets on agricultural trade options prepared by its Division of Economic Analysis. These pamphlets provide an overview of agricultural trade options and the rules for trading them. The first of these brochures, entitled ''Agricultural Trade Options—What Agricultural Producers Need to Know,'' was issued in December 1998. This brochure acquaints agricultural producers with how they can use agricultural trade options to manage risk. The second and third brochures, issued in February 1999, summarize how to become an agricultural trade option merchant and provide general information to lenders and extension agents, respectively. They are entitled ''How to Become an Agricultural Trade Options Merchant,'' and ''Agricultural Trade Options—Information for Lenders and Extension Agents.'' All three of these brochures are available on the Commission's website.

final rules are too onerous, thereby discouraging participation. Particular concerns have been raised that the registration, reporting and disclosure requirements are too burdensome and that certain of the restrictions on the form of options that producers may enter into limit their usefulness. These groups maintain that if the regulatory requirements were relaxed agricultural trade options would be offered more readily.

In issuing the interim final rules, the Commission noted that the rules were an experiment and that the Commission ''has not foreclosed reconsideration of any specific issue.'' 62 FR 18823. In this regard, since the rules' promulgation, a number of groups have recommended the the Commission reconsider various aspects of the current rules. The Commission receives the views of a cross-section of the agricultural sector through its Agricultural Advisory Committee (AAC). The AAC, at its most recent meeting on April 21, 1999, heard presentations on the agricultural trade option rules by representatives of the National Grain and Feed Association (NGFA) and the National Introducing Brokers Association. AAC members then engaged in a detailed discussion of various possible rule alternatives and the policy issues that such alternatives would raise. Subsequently, nine organizations representing a broad cross-section of production agriculture submitted to the Commission their common views on these issues by letter dated April 23, 1999.[3]

The dialogue over the interm final rules has not resulted in a unified industry-wide view on recommended changes to those rules. Nevertheless, seven letters were submitted to the Commission recommending various changes. These include the April 23 letter from the nine producer organizations, a letter dated April 19, 1999 from the Farm Credit Council, a letter dated April 21, 1999, from the Illinois Farm Bureau, a letter dated June 15, 1999, from the NGFA, a letter dated June 16, 1999, from the Chicago Board of Trade (CBT), a letter dated July 9, 1999, from the National Grain Sorghum Producers and a letter dated August 9, 1999, from the American Farm Bureau Federation, the National Association of What Growers, the American Soybean Association and the National Farmers Union.[4] Based in part on the various views expressed in these letters, the Commission is proposing a number of revisions to the interim final rules.

## II. Proposed Revisions to the Agricultural Trade Option Rules

The Commission has reconsidered a number of the requirements of the agricultural trade option rules with a view toward maintaining their basic customer protection while increasing the commercial utility of the instruments or trading strategies permitted and streamlining regulatory or paperwork burdens. The Commission specifically revisited the particular rules relating to the registration requirements and procedures for ATOMs and their sales agents (associated persons or APs), whether physical delivery should be required upon exercise of the option, whether producers should be able to write call options, whether a different form of risk disclosure would be more appropriate and whether the $10 million exemptive level should be changed. The Commission also considered a number of additional revisions to reduce paperwork and reporting burdens or to bring certain contracting requirements into closer alignment with certain cash market practice. An analysis of each of these issues follows.

### *A. Registration*

The requirement that all market professions be registered, and the authority to approve or revoke registrations, is an important means of policing conduct in a market. The requirement that market professionals be registered gives the Commission an important tool for protecting customers. Registration of market professionals helps assure customers of the registrant's probity, and a testing or training requirement helps ensure a minimum level of competency. Every commodity professional, unless excluded or exempted, that deals with a member of the public is required to be registered with the Commission.

As part of these customer protections, section 14 of the Act provides that ''any person complaining of any violation of any provision of this Act or any rule . . . issued pursuant to this Act by any person who is registered under this Act'' may bring a reparations action therefore the Commission. Accordingly, complaints that do not relate to violations of the Act or Commission rules are not subject to Commission reparations proceedings. A dispute arising solely out of a cash market transaction, therefore, would be dismissed and not be heard the Commission. *See* 17 CFR 12.26.

By long-standing rule (17 CFR 180.3(b)(3)), the Commission does not permit a customer to waive the right to seek reparations through a predisute arbitration agreement. However, if the customer declines to institute reparations proceedings, the claim or grievance is subject to such a preexisting arbitration agreement.

NGFA, in particular, supports an alternative means of qualification to offer or solicit agricultural trade options short of registration so that its members would not be subject to the Commission's reparations authority. NGFA provides an arbitration service to resolve cash grain contract disputes involving its members, and supports its members' right to require customers through account opening agreements to use NGFA arbitration as the sole means to resolve disputes involving agricultural trade options. In contrast, several producer organizations support the registration requirement as a means ''to protect customers and reduce the likelihood that unscrupulous individuals will qualify as agricultural trade options merchants'' preferring that ''a full range of dispute resolution options . . . remain available to contract participants ranging from arbitration under industry trade rules to CFTC reparations actions.'' *See* letter of April 23. *See also* letters of July 9 and August 9, 1999.

It appears that there may be substantial public support for a registration requirement, both because of the higher level of customer protection it provides, and a desire to have available the Commission's reparations forum for dispute resolution. Although some sectors of agriculture may have well-regarded industry arbitration fora available, many do not. For these sectors, reparations may be the only readily available non-judicial avenue for dispute resolution. Accordingly, the Commission is retaining the registration requirement at this time. However, the Commission certainly would consider deleting the registration requirement in favor of a simple notification filing stating one's intent to enter into the trade option business if that alternative is preferred by those whom the regulations are

[3] These nine producer organizations include the: (1) American Farm Bureau Federation, (2) National Association of Wheat Growers, (3) National Corn Growers Association, (4) National Farmers Union; (5) National Pork Producers, (6) American Soybean Association, (7) National Cattlemen's Beef Association, (8) National Cotton Council of America, and (9) National Grain Sorghum Producers.

[4] In addition, various views concerning the interim final rules were expressed by participants in the United States Senate Agriculture, Nutrition and Forestry Committee's (Senate Agriculture Committee) roundtable to discuss futures, derivatives and related public policy issues held on February 25 and 26, 1999 and by witnesses at the committee's hearings to examine crop insurance and risk management strategies held on March 10 and 17, 1999.

intended to protect. The Commission specifically invites comments on whether the registration requirement should be retained.[5]

Despite this fundamental disagreement over whether registration should be required, there is broad agreement that the registration procedures for ATOMs and their sales agents be streamlined and simple. Unlike other categories of registrants, under current rules an ATOM's principals and sales agents need not provide fingerprints or pass a proficiency test. In other respects the registration requirements are similar to those for other Commission registrants, including processing of registration applications by the National Futures Association (NFA), the requirement that each applicant certify that it is not disqualified from engaging in a commodity-related business under the statutory disqualification provisions of sections 8a(2) or 8a(3) of the Act and the requirement that an ATOM certify that, to the best of its knowledge, each of its associated persons meets the final rules' registration requirements. Those seeking registration as associated persons are required to complete six hours of instruction in the requirements of the Act and the rules thereunder, the economic functioning and risks of agricultural trade options, and the registrant's responsibility to observe just and equitable principles of trade relating to such options.

The Commission is proposing to streamline registration of ATOMs and their APs by removing the requirement that ATOMs separately certify the truth of their principal's and APs' applications. The Commission also proposes to limit the principals required to file as part of an ATOM's application to those principals who exercise direct control over the ATOM's business affairs. For an ATOM that is part of a larger agribusiness, this should greatly lessen the number of principals who are required to file. This is because, unlike financial service companies that commonly use a holding company structure, many companies engaged in agriculture are structured as unitary corporations with separate operating divisions, potentially increasing the number of principals within the organization.

The Commission is also proposing to delete the mandatory six hour training course for sales agents. The offer or sale of agricultural trade options is not expected to be the primary commercial activity for many, if not most ATOMs, increasing the relative burden of the mandatory training requirement. Instead, each ATOM would decide the amount and nature of training it will require of its sales agents, presumably based upon the nature of its trade option business.

In addition, paperwork associated with the registration process could be streamlined by deleting the requirement that ATOMs notify the Commission when an associated person leaves its employ and a new associated person begins. Because many ATOMs may employ individuals well-known in their local communities, such filings may be less necessary. On the other hand, staff turnover at such locations would tend to be low, reducing the burden of filing updates on affiliated staff. Some ATOMs may employ widely dispersed sales forces and may prefer to have a means of providing public notice of their officially authorized sales agents through such updates. Accordingly, the Commission is not now proposing to delete the requirement that ATOMs notify the NFA when an associated person leaves its employ or is hired. However, it specifically requests commenters to address the relative burden and benefits of this requirement.

Finally, NGFA, in particular, suggests that the Commission directly process applications for registration as an ATOM or an AP of an ATOM, an administrative task that the interim final rules delegate to the National Futures Association. 17 CFR 3.13(e). NGFA suggests that, ''it is inappropriate to involve the NFA in any form of 'registration' process. . . . The NFA is a self-regulatory agency for futures, not cash markets.'' However, the interim final rules strictly limit NFA's role. NFA does not become a self-regulatory authority for ATOMs simply by administratively processing their registration applications on the Commission's behalf. NFA exercises no regulatory authority over the offer or sale of agricultural trade options by ATOMs as a consequence of that administrative function, nor do ATOMs or their APs thereby become members of NFA.[6]

Moreover, the Commission faces a number of challenges in directly processing applications for registration of ATOMs and their APs. The Commission completely transferred this administrative function to NFA during the 1980s and no longer has systems in place to process this type of registration application. Accordingly, the Commission would have to rebuild this capability from the ground up before it could begin reviewing and approving registrations once again. Moreover, rebuilding such administrative systems would, in the short-run, compete for technical resources that are being devoted to Y2K compliance. In contrast, NFA can process these additional categories of registrants with only minor changes to its existing systems.

In light of the above, the Commission requests comment on the possible benefits to ATOMs, their APs or potential customers from the Commission's direct processing of registration applications, and the relative cost of such a proposal, including the indirect costs caused by the increased implementation time needed by the Commission to reestablish this administrative capability.

*B. Physical Delivery*

The interim rules prohibit agricultural trade options from being off-set, and require that if exercised, agricultural trade options result in physical delivery of the underlying commodity. The interim rules, however, permit substitution of a forward contract agreement prior to the option's expiration. Commission Rule 32.13(a)(3). This provision, by requiring agricultural trade options explicitly to serve a merchandising function, helps assure a close relationship between the agricultural trade option transaction and the producer's cash market activities. It also helps to assure that such options would be transacted between those having pre-existing cash market relationships and that their functioning would likely be easily understood. See, 63 FR at 59627.

Support is widespread among all sectors of agriculture for some permitted types of cash settlement, offset or cancellation of agricultural trade options.[7] The bar on cash settlement/

[5] The Commission is also proposing to clarify the enforceability of pre-dispute arbitration clauses for agricultural trade options and the procedures by which customers can waive their right to use Commission reparations procedures to resolve disputes with an ATOM by incorporating into these rules streamlined procedures similar to those included in Commission Rule 180.3(b) which are applicable to other commodity professionals. Moreover, NFA arbitration is only available for the resolution of disputes involving NFA members. Accordingly, NFA arbitration would not be available to ATOMs and their customers.

[6] This is similar to floor brokers and floor traders, whose registration applications are processed by NFA but who do not become NFA members and are not regulated by NFA. Rather, they are generally governed by the exchanges that have granted them trading privileges.

[7] Unlike forward contracts which are commercial, merchandizing transactions resulting in delivery, options can be settled in a number of ways. For example, various exchange-traded options may be settled through the delivery of a futures position,

offset was adopted, in part, to discourage speculative use of agricultural trade options by purchasers and as a means of limiting vendors to entities with a strong, on-going connection to the cash markets. On the other hand, observers have suggested many situations when cash settlement/offset would be consistent with sound business practice, such as when hail wipes out a producer's ability to deliver on an option having time-value remaining or when localized conditions may make delivery at an alternate location relatively more attractive. Others have suggested that more highly engineered option products can be offered only if cash-settlement is permitted.

Some observers have suggested that the Commission permit cash settlement/offset of agricultural trade options only as a one-time alternative to delivery. Although such a requirement would discourage speculation, it could be easily evaded simply by establishing a new option position with a second vendor or by identifying a new option as covering additional production capacity. In light of the obvious enforcement difficulties in enforcing a one-time cash-settlement rule and the likelihood that other regulatory provisions, such as the registration of ATOMs and the requirement that ATOMs be commercials, to some degree would discourage unscrupulous entities from offering, and purchasers from buying, agricultural trade options merely for speculative purposes, the Commission is proposing simply to remove the requirement that agricultural trade options, if exercised, result in physical delivery.[8]

However, the Commission is proposing to require ATOMs to provide customers with an account statement following the termination, cancellation, cash settlement or amendment of an option's expiration date (rolling the contract). Customers could have expected to have their accounts settled upon physical delivery, and this proposed requirement will ensure that customers who cash settle their contracts are provided with similar information.[9] Moreover, by receiving an accounting and knowing with certainty the outcome of their closed position, customers should better be able to ascertain the potential outcome of entering into a subsequent transaction. In addition, the Disclosure Statement continues to advise potential purchasers that trade options are required to have a business purpose and are not to be used for speculation.

*C. Risk Disclosure, Customer Account Information and Reports to the Commission*

The interim final rules mandate that customers be provided with both a general, summary disclosure statement upon opening an account and transaction-specific disclosures before entering into a specific transaction. Commission Rules 32.13(a) (7) and (8). The transaction-specific disclosure includes information relating to the specific terms of a particular transaction. The ATOM is required to disclose the customer's worst possible financial outcome when the option premium is not collected up front or when an option contract is amended.

There is general agreement among representatives of both potential vendors and customers that the risk disclosure mandated by the interim final rules should be streamlined and made administratively simpler by eliminating the transaction-specific disclosure statement. Many of the transaction-specific disclosures could be made in the summary disclosure statement. Others may be readily ascertainable from the face of the option contract itself. The CBT suggested that the existing statement regarding the availability of exchange-traded options offering greater regulatory and financial protections be enhanced to state explicitly that the trade option is not guaranteed in any way by a contract market.

The Commission is proposing to eliminate the transaction-specific disclosure statement and to revise the summary disclosure to include some of the deleted material. For example, the Commission is proposing to add a paragraph to the summary disclosure statement advising customers to understand each option's procedure for exercise, time of expiration, cost (including the amount of, and method of paying, the premium) and associated fees. In addition, as noted above, the Commission is proposing that before the expiration date of a contract is amended the customer be given a current account statement. This is in lieu of the worst-case outcome disclosure which is currently required. A current account statement will provide the information necessary for the customer to determine the possible financial outcome resulting from the contract's amendment.

In addition, the Commission is proposing to amend the requirements relating to reporting of account information to customers. A number of sources, including several state-level representatives of producers and commodity first-handlers, suggested that the requirements that ATOMs provide customers with account-related information potentially created too great a paperwork burden for smaller firms. Specifically, Rule 32.13(b) requires ATOMs to provide customers with written confirmation of contracts within 24 hours of execution and within 48 hours of a customer request, a written response regarding the customer's account or position. In addition, ATOMs are required to notify customers in writing of an option's expiration within the coming calendar month. This requirement was intended to assist customers in managing their option positions and, in particular, to ''provide customers with notice sufficient to reduce the occasions on which customers permit in-the-money options to expire due to inattention.'' 63 FR 18828.

Representatives of agricultural organizations opined that many of the required writings would be required during harvest time, when smaller businesses, including producers, would prefer the immediacy of telephonic communication over written notice. Accordingly, the Commission is proposing to increase the ATOM's flexibility in meeting these requirements by permitting oral communications and notice to customers.[10]

delivery of a commodity such as gold, or the payment of the option's value based upon a reference price such as the London gold fix. Cash settlement of a trade option differs from physical delivery on the option in that the option's holder, upon exercise, is paid the option's value rather than delivering the commodity at the strike price specified in the option contract.

[8] Although Rule 32.13(a) requires that an ATOM be a commercial involved in the production, processing or handling of the underlying commodity, the interim final rules did not limit eligibility to become an ATOM to a commodity's first handler. Nevertheless, permitting cash settlement likely will enable a greater variety of commercial enterprises engaged in agriculture to offer these contracts. The Commission therefore is proposing to clarify that eligible commercial enterprises include those selling inputs used in the production of the commodity as well as banks that routinely finance businesses involved in the production, processing or handling of the commodity.

[9] For example, if a customer initially purchases an option for $1000 and later offsets that option by selling the option back to the ATOM for $500, the customer will have to be notified that the purchase and resale of the option netted a $500 loss. This rule would have the effect of keeping customers informed of any losses incurred on option trades and discourage them from ''speculating on account.''

[10] The Commission also is proposing to delete the requirement that the ATOM provide the option purchaser with a separate written confirmation. Elsewhere, the Commission is requiring that an executed copy of the written contract or a written confirmation of oral contracts be provided to the

Continued

Similarly, some have observed that oral contracting is still the prevailing means of transacting business in certain agricultural cash markets, and they suggests that the interim rules, which require agricultural trade option contracts to be written, should be amended to reflect that reality. In this regard, state law has recognized this practice by recognizing the validity of such oral contracts when they have been confirmed in writing. The Commission is proposing to amended its rules to recognize this practice. However in doing so, the Commission is requiring that the written confirmation, which must be signed by the ATOM, include all material terms of the option contract. In this way, option contracts can be made over the telephone, as are cash forward contracts, and both ATOMs and customers will be certain of the contract's terms, thereby reducing potential disputes between the parties over vaguely defined contract terms.[11]

In addition, there has been widespread support among agricultural groups for reducing ATOMs' required reports. The interim rules require ATOMs to file reports on volume and open interest four times a year with the NFA. Many claim that such a filing requirement would be onerous on small ATOMs that do not have staffs dedicated only to back office operations. In this regard, they note that one of the quarterly filings would be due during harvest, a time when smaller business are stretched thin and may have no available staff to compile such a report. They further maintain that lacking programming support, such reports would often have to be compiled manually. In addition, they prefer that such reports be filed with the Commission rather than the NFA, an organization in which they are not members. The Commission is proposing to reduce periodic reporting to one annual report, filed by the ATOM with the Commission within 90 days of the end of its fiscal year.[12] In that way, the report can be generated as one more step in the year-end closing of an ATOM's routine business accounts.

This yearly report obviously will provide the Commission with less information. However, it will provide an overall picture of the industry over time. Moreover, the Commission is retaining authority to obtain information as needed for regulatory purposes through inspections of the books and records of a particular firm, as needed. In addition, the Commission will likely conduct a market-wide survey, by special call, in order to evaluate the success of the rules. The information that would be required in a special call is specified in the rules.[13]

*D. Required Contract Terms and Limitations on Certain Strategies*

As noted above, one cause of a number of disputes involving hedge-to-arive contracts was inadequate of vague contract specifications. To avoid a similar problem with agricultural trade options, Commission Rule 32.13(a)(6) requires that an agricultural trade option specify a number of contract terms, including the procedure for exercise, the expiration date and latest time on that date for exercise; the strike price; the total quantity of the commodity underlying the option; the quality or grade of commodity to be delivered if the option is exercised and any adjustments to price for deviations from stated quality or grade, or the range of, and a statement of the method for calculating such adjustments; the delivery location; the elements comprising the purchase price to be charged, including the premium, mark-ups on the premium, costs, fees and other charges; and additional costs, if any, which may be incurred if the commodity option is exercised. Commission Rule 32.13(a)(6)(i)–(vii). These terms would be expected to be found in any fully-specified physical delivery option contract.

However, representatives of some agricultural first handlers have objected to these requirements, arguing that they are overly restrictive, reducing an ATOM's ability to engineer instruments that offer greater flexibility to producers. One example given is the requirement that the option specify a delivery location and adjustments from par value. Although it is not clear to what degree these requirements actually would restrict an ATOM's design creativity, the current rules would have to be amended substantially to make conforming changes providing for cash settled options. Accordingly, and in light of the fact that even in the absence of the current rule options would ordinarily include the above terms, the Commission is proposing to delete this rule as a separate design requirement on ATOMS. Instead, the Commission is proposing to include in the Disclosure Document a statement that option customers should be sure that the contract includes, and that the customer understands the operation of, all of the above contract provisions.

Another common source of dispute involving hedge-to-arrive contracts involved situations where customers were the grantors or writers of call options. In return for the premium income paid to enhance their current grain prices, customers granted elevators the right to demand delivery in the future of grain that the producer did not yet own. Many producers entering into these transactions appear not to have fully understood the transaction's risk. Accordingly, the interim rules permit call writing by producers only to the extent the written call is paired with a purchased or long put option in a window or fence strategy. Some observers have suggested that producers, if they desire, should be able to grant or write call options if the position is covered by expected production. However, this position is not riskless. For example, if the producer suffers a production shortfall or loss, the producer's liability could be significant. For this reason, many of the producer representatives opposed changing the interim rules in this respect. The Commission, therefore, is not now proposing to change the prohibition against writing covered calls. In taking this position, the Commission is not ruling out its reconsideration after producers have had an opportunity to gain experience generally with the offer and sale of trade options.

*E. Exemption Level for Sophisticated Entities*

The interim rules exempt transactions in which each party to the option contract has a net worth of not less than $10 million from compliance with all of the specific conditions for trading agricultural trade options. Commission

customer. Accordingly, a separate confirmation is redundant.

[11] As the Commission explained in its notice of proposed rulemaking, the ''lack of written terms and conditions in [hedge-to-arrive] contracts led to widespread disagreement among parties over the terms of the instruments, complicating the resolution of various issues.''

[12] Unlike the processing of registrations which has been delegated to the NFA and for which the Commission has no existing systems capability, the Commission has an extensive reporting system on which to build this reporting requirement. Accordingly, it would not be an undue or an unreasonable administrative burden for the Commission to undertake direct administration of the reporting requirement. Moreover, the Commission and not the NFA would be the primary user of the information reported. For these reasons, the Commission is proposing to revise the requirement to provide that ATOMs file their annual reports directly with the Commission.

[13] The Commission is also proposing to revise the requirement that, except for funds used to purchase exchange-traded contracts as cover, ATOMs keep in segregation 100% of customer funds paid up front. In its rules governing the off or sale of dealer options, another type of over-the-counter option, the Commission required the option grantor to hold not less than 90% of funds paid by a customer in segregation (17 CFR 32.6(a)). The Commission is proposing to apply that practice to agricultural trade options, as well. This will provide ATOMs greater flexibility in structuring their business.

Rule 32.13(g). The Commission determined that the exemption should apply only to those entities with a very high net worth and that a greater level of regulatory protection was appropriate for transactions involving less well-financed entities. In particular, the Commission was of the view that ''only the larger and better financed entities will consistently have available the legal and financial resources needed to protect their interests in an unregulated environment.'' 62 FR 59634.

While some in the agricultural community support lowering the exemption level, others oppose a lower exemption or even any exemption at all. NGFA, in particular, has argued that a lower exemption level ''. . . would permit greater creativity to the market to more thoroughly assess what forms of agricultural trade options are most likely to be useful and successful for both buyers and sellers'' and ''. . . would permit wholesale, or secondary markets for certain forms of agricultural trade options to develop.'' *See* letter of June 15, 1999. Those opposing a lower exemption level fear that a lower exemption level ''will create a competitive inequity across the merchandizing sector.'' These organizations instead favor increasing participation in regulated transactions by making them more user-friendly through the across-the-board revisions that the Commission is proposing. In light of the lack of consensus to lower the exemption level and the very broad changes to the rules being proposed, the Commission is not proposing to reduce the current exemption level.

## III. Other Matters

### *A. Paperwork Reduction Act (PRA)*

When publishing proposed rules, the PRA of 1995 (Pub. L. 104–13 (May 13, 1996)) imposes certain requirements on federal agencies (including the Commission) in connection with their conducting or sponsoring any collection of information as defined by the PRA. In compliance with the Act, the Commission, through this rule proposal, solicits comments to: (1) Evaluate whether the proposed collection of information is necessary for the proper performance of the functions of the agency, including the validity of the methodology and assumptions used. (2) Evaluate the accuracy of the agency's estimate of the burden of the proposed collection of information including the validity of the methodology and assumptions used. (3) Enhance the quality, utility, and clarity of the information to be collected. (4) Minimize the burden of the collection of the information on those who are to respond, including through the use of appropriate automated, electronic, mechanical, or other technological collection techniques or other forms of information technology; e.g., permitting electronic submission of responses. The Commission has previously received approval from OMB for the collection of information related to off-exchange agricultural trade options, which OMB designated as information collection 2028–0048. The approved burden associated with 3038–0048 is as follows:

*Average burden hours per response:* 5.420.

*Number of respondents per year:* 3,610.

*Frequency of response:* Quarterly and on occasion.

The Commission has submitted the proposed agricultural trade options rules and amendments of OMB for approval. The proposed rules would change the burden as follows:

*Average burden hours per response:* 5.59.

*Number of respondents per year:* 3,605.

*Frequency of response:* Annually and on occasion.

Persons wishing to comment on the information that would be required by this proposed/amended rule should contact the Desk Officer, CFTC, Office of Management and Budget, Room 10202, NEOB, Washington, DC 20503, (202) 395–7340. Copies of the information collection submission to OMB are available from the CFTC Clearance Officer, 1155 21st Street, NW, Washington, DC 20581, (202) 418–5160.

### *B. Regulatory Flexibility Act (RFA)*

The RFA, 5 U.S.C. 601 et seq., requires that agencies, in proposing rules, consider the impact of those rules on small businesses. The Commission has not previously determined whether all or some agricultural trade option merchants should be considered ''small entities'' for purposes of the RFA and, if so, to analyze the economic impact on such entities. However, the Commission is proposing that one of the conditions for registration as an agricultural trade option merchant is maintenance of a minimum level of net worth. The Commission previously found that other entities which were required to maintain minimum levels of net capital were not small entities for purposes of the RFA. See, 47 FR 18618, 18619 (April 30, 1982).

The Commission has also found, however, that one category of Commission registrant—introducing brokers (IBs)—which is required to maintain a minimum level of net capital, may include small entities for purposes of the RFA. Nevertheless, in addition to the $50,000 minimum net worth required for registration as an agricultural trade option merchant, such registrants must be in business in the underlying cash commodity. This will require that they have additional resources invested in order to qualify as an agricultural trade option merchant, in contrast to an IB whose additional investment beyond the minimum net capital may be relatively small. For this reason, the Commission believes that agricultural trade option merchants are more appropriately treated as not being small entities under the RFA.

The Chairman, on behalf of the Commission, hereby certifies, pursuant to 5 U.S.C. 605(b), that the action taken herein will not have a significant economic impact on a substantial number of small entities. This certification is based on the fact that the proposed rules will revise rules removing a complete ban on the offer or sale of trade options on the agricultural commodities enumerated under the Act. The proposed rules permitting such transactions subject to the specified conditions therefore remove a burden for all entities, regardless of size.

## List of Subjects

*17 CFR Part 3*

Administrative practice and procedure, Brokers, Commodity futures.

*17 CFR Part 32*

Commodity futures, Commodity options, Prohibited transactions, Trade options.

In consideration of the foregoing, and pursuant to the authority contained in the Act, and in particular sections 2(a)(1)(A), 4c, and 8a, 7 U.S.C. 2, 6c, and 12A, as amended, the Commission hereby proposes to amend parts 3 and 32 of chapter I of title 17 of the Code of Federal Regulations as follows:

## PART 3—REGISTRATION

1. The authority citation for part 3 continues to read as follows:

**Authority:** 7 U.S.C. 1a, 2, 4, 4a, 6, 6b, 6c, 6e, 6f, 6g, 6h, 6i, 6k, 6m, 6n, 6o, 6p, 8, 9, 9a, 12, 12a, 13b, 13c, 16a, 18, 19, 21, 23; 5 U.S.C. 552, 552b.

2. Section 3.13 is proposed to be revised to read as follows:

### § 3.13 Registration of agricultural trade option merchants and their associated persons.

(a) *Definitions.* (1) *Agricultural trade option merchant.* ''Agricultural trade option merchant'' means any person that is in the business of soliciting,

offering to enter into, entering into, confirming the execution of, or maintaining a position in, transactions or agreements in interstate commerce which are not conducted or executed on or subject to the rules of a contract market, and which are or are held out to be of the character of, or are commonly known to the trade as, an ''option,'' ''privilege,'' ''indemnity,'' ''bid,'' ''offer,'' ''put,'' ''call,'' ''advance guarantee,'' or ''decline guarantee,'' involving wheat, cotton, rice, corn, oats, barley, rye, flaxseed, grain sorghums, mill feeds, butter, eggs, solanum tuberosum (Irish potatoes), wool, wool tops, fats and oils (including lard, tallow, cottonseed oil, peanut oil, soybean oil and all other fats and oils), cottonseed meal, cottonseed, peanuts, soybeans, soybean meal, livestock, livestock products, and frozen concentrated orange juice. Provided, however, that any person entering into such transactions solely for the purpose of managing the risk arising from the conduct of his or her own commercial enterprise is not considered to be in the business described in this paragraph.

(2) *Associated person of an agricultural trade option merchant.* ''Associated person of an agricultural trade option merchant'' means a partner, employee, or agent (or any person occupying a similar status or performing similar functions) that:

(i) Solicits or accepts customers' orders (other than in a clerical capacity) or

(ii) Supervises any person or persons so engaged.

(b) *Registration required.* It shall be unlawful for any person in the business of soliciting, offering or selling the instruments listed in § 32.2 of this chapter to solicit, to offer to enter into, or to enter into, to confirm the execution of, or to maintain transactions in such instruments or to supervise persons so engaged except if registered as an agricultural trade option merchant or as an associated person of such a registered agricultural trade option merchant under this section.

(c) *Duration of registration.* (1) A person registered in accordance with the provisions of this section shall continue to be registered until the revocation or withdrawal of registration.

(2) Agricultural trade option merchants must notify the National Futures Association within twenty days when an associated person has ceased to be so associated.

(3) An associated person who ceases to be associated with a registered agricultural trade option merchant is prohibited from engaging in activities requiring registration under § 32.13 of this chapter or representing himself or herself to be a registrant until:

(i) A registered agricultural trade option merchant notifies the National Futures Association of the person's association; and

(ii) The associated person certifies to the National Futures Association that he or she is not disqualified from registration for the reasons listed in section 8a (2) and (3) of the Act; *Provided, however,* no such certification is required when the associated person becomes associated with the new agricultural trade option merchant within ninety days from when the associated person ceased the previous association.

(d) *Conditions for registration.* (1) Applicants for registration as an agricultural trade option merchant must meet the following conditions:

(i) The agricultural trade option merchant must have and maintain at all times net worth of at least $50,000 computed in accordance with generally accepted accounting principles;

(ii) The agricultural trade option merchant must identify each of the natural persons who controls or directs the offer or sale of trade options or associated trading activity by the agricultural trade option merchant or who supervises any associated person of the agricultural trade option merchant and each such natural person must certify that he or she is not disqualified from registration for the reasons listed in sections 8a(2) and (3) of the Act; and

(iii) The agricultural trade option merchant must provide access to any representative of the Commission of the U.S. Department of Justice for the purpose of inspecting books and records.

(2) Applicants for registration as an associated person of an agricultural trade option merchant must meet the following conditions. Such persons must:

(i) Identify the agricultural trade option merchant with whom the person is associated or to be associated within thirty days of the person's registration; and

(ii) Certify that he or she is not disqualified from registration for the reasons listed in sections 8a(2) and (3) of the Act.

(e) *Applications for registration.* (1) The agricultural trade option merchant, including its principals, and associated persons of an agricultural trade option merchant must apply for registration on the appropriate forms specified by the National Futures Association and approved by the Commission, in accordance with the instructions thereto, including the separate certifications from each natural person that he or she is not disqualified for any of the reasons listed in sections 8a(2) and (3) of the Act and such other identifying background information as may be specified.

(2) The agricultural trade option merchant's application must also include its most recent annual financial statements certified by an independent certified public accountant in accordance with generally accepted auditing standards prepared within the prior 12 months.

(3) These applications must be supplemented to include any changes in the information required to be provided thereon on a form specified by the National Futures Association and approved by the Commission.

(f) *Withdrawal of application for registration; denial, suspension and revocation of registration.* The provisions of §§ 3.51, 3.55, 3.56 and 3.60 shall apply to applicants for registration and registrants as agricultural trade options merchants and their associated persons under this part 3 as though they were an applicant or registrant in any capacity under the Act.

(g) *Withdrawal from registration.* An agricultural trade option merchant that has ceased or has not commenced engaging in activities requiring registration may withdraw from registration 30 days after notifying the National Futures Association on the specified form of its intent to do so, unless otherwise notified by the Commission. Such a withdrawal notification must include information identifying the location of, and the custodian authorized to release, the agricultural trade option merchant's records, a statement of the disposition of customer positions, cash balances, securities or other property and a statement that no obligations to customers arising from agricultural trade options remain outstanding.

(h) *Dual registration of associated persons.* An associated person of an agricultural trade option merchant may be associated with other registrants subject to the provision of § 3.12(f).

3. Section 3.14 is proposed to be removed and reserved.

## PART 32—REGULATION OF COMMODITY OPTION TRANSACTIONS

4. The authority citation for part 32 continues to read as follows:

**Authority:** 7 U.S.C. 2, 6c and 12a.

5. Section 32.2 is republished for the convenience of the reader:

**§ 32.2 Prohibited transactions.**

Notwithstanding the provisions of § 32.11, no person may offer to enter into, confirm the execution of, or maintain a position in, any transaction in interstate commerce involving wheat, cotton, rice, corn, oats, barley, rye, flaxseed, grain sorghums, mill feeds, butter, eggs, solanum tuberosum (Irish potatoes), wool, wool tops, fats and oils (including lard, tallow, cottonseed oil, peanut oil, soybean oil and all other fats and oils), cottonseed meal, cottonseed, peanuts, soybeans, soybean meal, livestock, livestock products, and frozen concentrated orange juice if the transaction is or is held out to be of the character of, or is commonly known to the trade as an ''option,'' ''privilege,'' ''indemnity,'' ''bid,'' ''offer,'' ''put,'' ''call,'' ''advance guarantee,'' or ''decline guarantee,'' except as provided under § 32.13 of this part.

6. Section 32.13 is proposed to be revised to read as follows:

**§ 32.13 Exemption from prohibition of commodity option transactions for trade options on certain agricultural commodities.**

(a) The provisions of § 32.11 shall not apply to the solicitation or acceptance of orders for, or the acceptance of money, securities or property in connection with, the purchase or sale of any commodity option of a physical commodity listed in § 32.2 by a person who is a producer, processor, or commercial user of, or a merchant handing or selling inputs used in the production of, the commodity which is the subject of the commodity option transaction, or the products or byproducts thereof, or a bank routinely engaged in the financing of such businesses, if all of the following conditions are met at the time of the solicitation or acceptance:

(1) That person is registered with the Commission as an agricultural trade option merchant and that person's associated persons and their supervisors are registered as associated persons of an agricultural trade option merchant under § 3.13 of this chapter.

(2) The option offered by the agricultural trade option merchant is offered to a producer, processor, or commercial user of, or a merchant handling, the commodity which is the subject of the commodity option transaction, or the products or byproducts thereof, and such producer, processor, commercial user, or merchant is offered of enters into the commodity option transaction soley for purposes related to its business as such.

(3) [Reserved]

(4) To the extent that payment by the customer of the purchase price is made to the agricultural trade option merchant prior to option expiration or exercise, that amount:

(i) May only be used by the agrciultural trade option merchant to purchase a covering position on a contract market designated under section 6 of the Act or part 33 of this chapter; and

(ii) Any amount not so used shall be treated as belonging to the customer until option expiration or exercise as provided under and in accordance with § 32.6 of this part.

(5) Producers may not:

(i) Grant or sell a put option; or

(ii) Grant or sell a call option, except to the extent that such a call option is purchased or combined with a purchased or long put option position, and only to the extent that the customer's call option position does not exceed ghe customer's put option position in the amount to be delivered. Provided, however, that the option must be entered into simultaneously and expire simultaneously or at any time that one or the other option is exercised.

(6) All option contracts, including all terms and conditions, offered or sold pursuant to this section shall be in writing, a signed copy of which shall be provided to the customer, of if the contract is verbal, it shall be confirmed in a writing which includes all terms and conditions, signed by the agricultural trade option merchant, and provided to the customer within 48 hours.

(7) Prior to the entry by a customer into the first option transaction with an agrcultural trade option merhant, the agrciultural trade option merchant shall furnish, through written or electronic media, a summary disclosure statement to the option customer. The summary disclosure statement shall include:

(i) The following statements in boldface type on the first page(s) of the summary disclosure statement:

This brief statement does not disclose all of the risks and other significant aspects of trading in community trade options. You are encouraged to seek out as much information as possible from sources other than the person selling you this option about the use and risks of option contracts before entering into this contract. The issuer of your option should be willing and able to answer clearly any of your questions.

**Appropriateness of Option Contracts**

Option contracts may result in the total loss of any funds you pay to the issuer of your option. You should carefully consider whether trading in such instruments is appropriate for you in light of your experience, objectives, financial resources and other relevant circumstances. The issuer of your option contract should be willing and able to explain the financial outcome of your option contract under different market conditions. You should also be aware that this option is not issued by, guaranteed by, or traded on or subject to the rules of a futures exchange. You may be able to obtain a similar contract or execute a similar risk management strategy using an instrument traded on a futures exchange which offers greater regulatory and financial protections.

**Costs and Fees Associated With an Option Contract**

Before entering into an option contract, you should understand all of the costs associated with it. These include the option premium, commissions, fees, costs associated with delivery if the option requires settlement by delivery upon its exercise and any other charges which may be incurred. All of these costs and fees must be specified in the terms of your option contract.

**Know and Understand the Terms of the Option Contract**

Before entering into an option contract, you should know and understand all of the option contract's terms. All of the option contract's terms should be included in the written contract, or for a verbal agreement, in a written confirmation. You should receive a signed copy of either the written contract or of the written confirmation. Your option contract should include contract terms setting:

(A) The total quantity of commodity underlying the option contract;

(B) The strike price(s) of the option contract;

(C) The procedure for exercise of the option contract, including when you can exercise and the latest time and date for exercise;

(D) Whether the option can be off-set or canceled prior to expiration;

(E) Whether settlement of the option is for cash or by delivery of the commodity;

(F) If settlement is by delivery, the delivery location or locations, the quality or grade of commodity to be delivered and how adjustments to price for deviations from stated quality or grade are determined;

(G) If settlement is by cash, the method for determining the cash-settlement price; and

(H) The cost and method of payment.

**Business Use of Trade Options**

In order to comply with the law, you must be buying this option for business-related purposes. The terms and structure of the contracts must therefore relate to your activity or commitments in the underlying cash market. Any amendments allowed to the option contract or its cancellation or off-set prior to its expiration date must reflect changes in your activity, in your commitments in the underlying cash market or in the carrying of inventory. Producers are not permitted to enter into short call options unless the producer also enters into a long put option contract for the same amount or more of the commodity, at the same time and with the same expiration date. Producers are not permitted to sell put options, whether alone or in combination with a call option.

**Dispute Resolution**

If a dispute should arise under the terms of this trade option contract, you have the right to choose to use the reparations program run by the Commodity Futures Trading Commission or any other dispute resolution forum provided to you under the terms of your customer agreement or by law. For more information on the Commission's Reparations Program contact: Office of Proceedings, Commodity Futures Trading Commission, Three Lafayette Centre, 1155 21st Street, NW., Washington, DC 20581, (202) 418–5250.

**Acknowledgment of Receipt**

The Commodity Futures Trading Commission requires that all customers receive and acknowledge receipt of this disclosure statement. The Commodity Futures Trading Commission does not intend this statement as a recommendation or endorsement of agricultural trade options. These commodity options have not been approved or disapproved by the Commodity Futures Trading Commission, nor has the Commission passed upon the accuracy or adequacy of this disclosure statement. Any representation to the contrary is a violation of the Commodity Exchange Act and Federal regulations.

(ii) The following acknowledgment section:

I hereby acknowledge that I have received and understood this summary risk disclosure statement.

_____

Date.

_____

Signature of Customer.

(8) An agricultural trade option merchant may not require a customer to waive the right to seek reparations under section 14 of the Act and part 12 of this chapter by an agreement or understanding to submit a claim or grievance to a specified settlement procedure prior to the time a claim or grievance arises. An agricultural trade option merchant, when notifying a customer of its intent to submit a claim or grievance to arbitration under a pre-existing agreement, must advise the customer in writing that the customer within forty-five days may elect to seek reparations under Section 14 of the Act and part 12 of this chapter.

(b) *Report of account information.* Registered agricultural trade option merchants must provide customers with open positions the following information:

(1) Within two business days of the off-set, cancellation or settlement of the option for cash, or of the amendment of the expiration of the option, a statement of profit or loss on the transaction and on the account;

(2) In response to a customer's request, current commodity price quotes, all other information relevant to the customer's position or account, and the amount of any funds owed by, or to, the customer within one business day if responding orally and within two business days if responding in writing;

(3) Written, verbal or electronic notice of the expiration date of each option which will expire within the subsequent calendar month.

(c) *Recordkeeping.* Registered agricultural trade option merchants shall keep full, complete and systematic books and records together with all pertinent data and memoranda of or relating to such transactions, including customer solicitations and covering transactions, maintain such books and records as specified in § 1.31 of this chapter, and make such reports to the Commission as provided for in paragraphs (c) and (d) of this section and as the Commission may otherwise require by rule, regulation, or order. Such books and records shall be open at all times to inspection by any representative of the Commission and the United States Department of Justice.

(d) *Reports.* Registered agricultural trade option merchants must file annual reports with the Commission at its Washington, DC, headquarters within ninety days after the close of the agricultural trade option merchant's fiscal year, in the form and manner specified by the Commission, which shall contain the following information:

(1) By commodity and put, call or combined option:

(i) Total number of new contracts entered into during the reporting period;

(ii) Total quantity of commodity underlying new contracts entered into during the reporting period;

(iii) Total number of contracts outstanding at the end of the reporting period;

(iv) Total quantity of underlying commodity outstanding under option contracts at the end of the reporting period;

(v) Total number of options exercised during the reporting period; and

(vi) Total quantity of commodity underlying the options exercised during the reporting period.

(2) Total number of customers by commodity with open option contracts at the end of the reporting period.

(e) *Special calls.* Upon special call by the Commission for information relating to agricultural trade options offered or sold on the dates specified in the call, each agricultural trade option merchant shall furnish to the Commission within the time specified the following information as specified in the call:

(1) All positions and transactions in agricultural trade options, including information on the identity of agricultural trade option customers and on the value of premiums, fees, commissions, or charges other than option premiums, collected on such transactions.

(2) All related positions and transactions for future delivery or options on contracts for future delivery or on physicals on all contract markets.

(3) All related positions and transactions in cash commodities, their products, and by-products.

(f) *Internal controls.* (1) Each agricultural trade option merchant registered with the Commission shall prepare, maintain and preserve information relating to its written policies, procedures, or systems concerning the agricultural trade option merchant's internal controls with respect to market risk, credit risk, and other risks created by the agricultural trade option merchant's activities, including systems and policies for supervising, monitoring, reporting and reviewing trading activities in agricultural trade options; policies for hedging or managing risk created by trading activities in agricultural trade options, including a description of the types of reviews conducted to monitor positions; and policies relating to restrictions or limitations on trading activities.

(2) The financial statements of the agricultural trade option merchant must on an annual basis be audited by a certified public accountant in accordance with generally accepted auditing standards.

(3) The agricultural trade option merchant must file with the Commission a copy of its certified financial statements within 90 days after the close of the agricultural trade option merchant's fiscal year.

(4) The agricultural trade option merchant must perform a reconciliation of its books at least monthly.

(5) The agricultural trade option merchant:

(i) Most report immediately if its net worth falls below the level prescribed in § 3.13(d)(1)(i) of this chapter, and must report within three days discovery of a material inadequacy in its financial statements by an independent public accountant or any state or federal agency performing an audit of its financial statements, to the Commission by facsimile, telegraphic or other similar electronic notice; and

(ii) Within five business days after giving such notice, the agricultural trade option merchant must file a written report with the Commission stating what steps have been taken or are being taken to correct the material inadequacy.

(6) If the agricultural trade option merchant's net worth falls below the level prescribed in § 3.13(d)(1)(i) of this chapter, it must immediately cease offering or entering into new option transactions and must notify customers having premiums which the agricultural trade option merchant is holding under paragraph (a)(4) of this section that such customers can obtain an immediate refund of that premium amount, thereby closing the option position.

(g) *Exemption.* (1) The provisions of §§ 3.13, 32.2, 32.11 and this section shall not apply to a commodity option offered by a person which has a reasonable basis to believe that:

(i) The option is offered to a producer, processor, or commercial user of, or a merchant handling, the commodity which is the subject of the commodity option transaction, or the products or byproducts thereof;

(ii) Such producer, processor, commercial user or merchant is offered or enters into the commodity option transaction solely for purposes related to its business as such; and

(iii) Each party to the option contract has a net worth of not less than $10 million or the party's obligations on the option are guaranteed by a person which has a net worth of $10 million and has a majority ownership interest in, is owned by, or is under common ownership with, the party to the option.

(2) Provided, however, that § 32.9 continues to apply to such option transactions.

Issued this 25th day of August, 1999, in Washington, DC, by the Commodity Futures Trading Commission.

**Catherine D. Dixon,**

*Assistant Secretary of the Commission.*

[FR Doc. 99–22555 Filed 8–30–99; 8:45 am]

BILLING CODE6351–01–M

## DEPARTMENT OF LABOR

### Occupational Safety and Health Administration

### 29 CFR Part 1926

**[Docket No. S–206C]**

**RIN 1218–AB62**

### Safety Standards for Fall Protection in the Construction Industry; Correction

**AGENCY:** Occupational Safety and Health Administration, U.S. Department of Labor.

**ACTION:** Advance notice of proposed rulemaking; correction.

**SUMMARY:** On July 14, 1999, OSHA published an Advanced Notice of Proposed Rulemaking (ANPR) titled, ''Safety Standards for Fall Protection in the Construction Industry.'' The ANPR was published with an incorrect Regulation Identifier Number (RIN). This document corrects that error.

**FOR FURTHER INFORMATION CONTACT:** Ms. Bonnie Friedman, Occupational Safety and Health Administration, Office of Public Affairs, Room N3647, U.S. Department of Labor, 200 Constitution Avenue, NW, Washington, DC 20210, Telephone: (202) 693–1999. Anyone with questions regarding this correction or the July 14 ANPR, should contact Ms. Jule Jones at (202) 693–2345.

**SUPPLEMENTARY INFORMATION:** On July 14, 1999, at 64 FR 38078, OSHA published an Advanced Notice of Proposed Rulemaking (ANPR) titled ''Safety Standards for Fall Protection in the Construction Industry.'' In that document, OSHA requested comments and information on fall protection for workers engaged in certain construction activities currently covered by OSHA's standards. The ANPR was published with an incorrect RIN. The correct RIN, as printed in the Semiannual Regulatory Agenda, is 1218–AB62.

**Authority:** This document was prepared under the direction of Charles N. Jeffress, Assistant Secretary of Labor for Occupational Safety and Health, U.S. Department of Labor, 200 Constitution Avenue, NW, Washington, DC 20210.

Signed at Washington, DC this 23rd day of August, 1999.

**Charles N. Jeffress,**

*Assistant Secretary.*

[FR Doc. 99–22422 Filed 8–30–99; 8:45 am]

BILLING CODE 4510–26–M

## DEPARTMENT OF TRANSPORTATION

### 33 CFR Part 100

**[CGD07–99–057]**

**RIN 2115–AE46**

### Special Local Regulations: Puerto Rico International Cup, Fajardo, Puerto Rico

**AGENCY:** Coast Guard, DOT.

**ACTION:** Notice of proposed rulemaking.

**SUMMARY:** Temporary special local regulations are being proposed for the Puerto Rico International Cup, in Fajardo, Puerto Rico. The event will be held from 1 p.m. to 2:30 p.m. Atlantic Standard Time (AST) on December 5, 1999 in Fajardo, Puerto Rico. These regulations are needed to provide for the safety of life on navigable waters during the event.

**DATES:** Comments must be received on or before November 1, 1999.

**ADDRESSES:** Comments may be mailed to Commander, U.S. Coast Guard Greater Antilles Section (aton), P.O. Box S–3666, San Juan, Puerto Rico 00902, or may be delivered to the Aids to Navigation Office at the Coast Guard Base in Old San Juan between 7:30 a.m. and 3:30 p.m. Monday through Friday, except federal holidays. The telephone number is (787) 729–5381.

**FOR FURTHER INFORMATION CONTACT:** Mr. John Reyes at (787) 729–5381.

**SUPPLEMENTARY INFORMATION:**

#### Request for Comments

The Coast Guard encourages interested persons to participate in this rulemaking by submitting written data, views, or arguments. Persons submitting comments should include their name and address, identify this rulemaking (CGD07–99–057) and the specific section of this proposal to which each comment applies, and give a reason for each comment.

The Coast Guard will consider all comments received during the comment period. It may change this proposal in the view of the comments. The Coast Guard plans no public hearing. Persons may request a public hearing by writing to the address under **ADDRESSES.** The request should include the reasons why a hearing would be beneficial. If the Coast Guard determines that the opportunity for oral presentations will aid this rulemaking, it will hold a public hearing at the time and place announced by a notice in the **Federal Register**.

#### Background and Purpose

These proposed regulations would create a regulated area offshore Fajardo, that would prohibit entry to non-participating vessels during the race. The participating race boats will be competing at high speeds with numerous spectator craft in the area, thus creating an extra or unusual hazard on the navigable waterways. These regulations are required to provide for the safety of life on navigable waters during the Puerto Rico International Cup, Fajardo, Puerto Rico.

#### Regulatory Evaluation

This proposed regulation is not a significant regulatory action under section 3(f) of Executive Order 12866 and does not require an assessment of potential costs and benefits under section 6(a)(f) of that order. The Office of Management and Budget has excepted it from review under that order. It is not significant under the regulatory policies and procedures of the Department of Transportation (DOT) (44 FR 11040; February 26, 1979). The

Coast Guard expects the economic impact of this proposal to be so minimal that a full regulatory evaluation under paragraph 10e of the regulated policies and procedures of DOT is unnecessary. The regulated area encompasses Rada Fajardo, Puerto Rico, entry into which is only prohibited for 3½ hours on the day of the event.

### Small Entities

Under the Regulatory Flexibility Act (5 U.S.C.601 et seq.) the Coast Guard must consider whether this proposed rulemaking will have a significant economic impact on a substantial number of small entities. Small entities include small business, not-for-profit organizations that are independently owned and operated and are not dominant under their fields, and governmental jusridictions with populations of less than 50,000.

Therefore, the Coast Guard certifies under 5 U.S.C. 605(b) that this proposed rule will not have a significant economic impact on a substantial number of small entities, as the regulations will only be in effect for approximately 3½ hours in a limited area off Fajardo.

If, however, you think that your business or organization qualifies as a small entity and that this proposed rule will have a significant economic impact on your business or organization, please submit a comment (see **ADDRESSES**) explaining why you think it qualifies and in what way and to what degree this proposed rule will economically affect it.

### Collection of Information

This proposed rule contains no collection of information requirements under the Paperwork Reduction Act (44 U.S.C. 3501 et seq.).

### Federalism

This action has been analyzed in accordance with the principles and criteria contained in Executive Order 12612, and it has been determined that this proposed rulemaking does not have sufficient federalism implications to warrant the preparation of a Federalism Assessment.

### Environmental Assessment

The Coast Guard considered the environmental impact of this proposed rule consistent with Figure 2–1, paragraph 34(h) of Commandant Instruction M16475.1C, and has determined that this action is categorically excluded from further environmental documentation.

### List of Subjects in 33 CFR Part 100

Marine safety, Navigation (water), Reporting and recordkeeping requirements, Waterways.

### Proposed Regulations

In consideration of the foregoing, the Coast Guard proposes to amend part 100 of Title 33, Code of Federal Regulations as follows:

## PART 100—[AMENDED]

1. The authority citation for part 100 continues to read as follows:

**Authority:** 33 U.S.C. 1233.49 CFR 1.46, and 33 CFR 100.35.

2. Add temporary § 100.35T–07–057 to read as follows:

**§ 100.35T–07–057 Puerto Rico International Offshore Cup, Fajardo, Puerto Rico.**

(a) *Regulated area:* A regulated area is established for the waters in Rada Fajardo, encompassing an area bounded by point 1 in position 18°21′12″N, 065° 36′51″W, thence to point 2 in position 18°19′48″N, 065°34′34″ W, thence to point 3 in position 18°19′50″ N, 065°34′26″ W, thence to point 4 in position 18°22′22″N, 065°35′19″W, thence to point 5 in position 18°23′08″N, 065°36′00″W, thence to point 6 in position 18°23′08″N, 065°36′09″W, thence to point 7 in position 18°22′40″N, 065°36′28″W, thence to point 8 in position 18°21′20″N, 065°36′55″W, thence return to point 1. All coordinates referenced use Datum: NAD 1983.

(b) *Coast Guard Patrol Commander.* The Coast Guard Patrol Commander is a commissioned, warrant, or petty officer of the Coast Guard who has been designated by Commanding Officer, Greater Antilles Section, San Juan, Puerto Rico.

(c) *Regulations:* Entry into the regulated area by other than event participants is prohibited, unless otherwise authorized by the Patrol Commander. Spectator craft are required to remain in a spectator area to be established by the event sponsor, the Puerto Rico Offshore Association.

(d) *Dates:* This section is effective at 12 p.m. and terminates at 3:30 p.m. AST on December 5, 1999.

Dated: August 11, 1999.

**G.W. Sutton,**

*Captain, U.S. Coast Guard, Commander, Seventh Coast Guard District, Acting.*

[FR Doc. 99–22655 Filed 8–30–99; 8:45 am]

BILLING CODE 4910–15–P

## DEPARTMENT OF DEFENSE

## Corps of Engineers; Department of the Army

## 33 CFR Part 207

## St. Marys Falls Canal and Locks, MI; Use, Administration and Navigation

**AGENCY:** Army Corps of Engineers, DoD.

**ACTION:** Notice of proposed rulemaking and request for comments.

**SUMMARY:** The Corps of Engineers proposes to amend its regulations on procedures to navigate the St. Marys Falls Canal and Soo Locks at Sault St. Marie, Michigan to incorporate changes in navigation procedures published in Notice to Navigation Interests over the last three years. We propose to change the location where up bound vessels seeking passage through the Soo Locks request lock dispatch. We also propose to establish the minimum number of line handlers that vessels should have while locking through the Soo Locks, place a restriction on the use of bow/stern thrusters while transiting through the Soo Locks, add a procedure for vessels departing from the MacArthur and Poe Locks simultaneously or at approximately the same time, and add a tug assist procedure for self-powered vessels.

**DATES:** Written comments must be received by October 15, 1999.

**ADDRESSES:** Army Corps of Engineers, ATTN: CECW–OD, 20 Massachusetts Avenue, NW, Washington, DC 20314–1000. Comments may also be faxed to (202) 761–1685 or e-mail to james.d.hilton@usace.army.mil.

**FOR FURTHER INFORMATION CONTACT:** Mr. Jim Hilton, Dredging and Navigation Branch (CECW–OD) at (202) 761–8830 or Mr. Michael O'Bryan, Assistant Chief, Construction-Operations Division, Detroit District at (313) 226–6444.

**SUPPLEMENTARY INFORMATION:** Pursuant to its authority in section 4 of the Rivers and Harbors Act of August 18, 1894 (28 Stat. 362; 33 U.S.C. 1), the Corps is proposing to amend the regulations in 33 CFR part 207.440(c), (e), (f), (h), and (r). The regulation governing the operation of the St. Marys Falls Canal and locks, 33 CFR 207.440 was adopted on November 27, 1945 (10 F.R. 14451) and has been amended at various times.

Paragraph (c) is being amended to formally establish the call-in location and change in call sign currently being utilized by vessel owners. The current call-in location was published in the Notice to Navigation Interests on September 13, 1990. The call sign was changed due to the realignment of the

Corps of Engineers Division Offices and was published in a Notice to Navigation Interests on November 25, 1997. Amending paragraph (c) responds to a request from users of the Soo Locks to further formalize the up bound call-in point by changing the regulation for operating the locks.

Paragraph (e) is being amended to establish a requirement for vessels passing through the locks to provide line handlers. Over the past decade, the number of line handlers provided by the Government has decreased. On April 19, 1996, the Corps Detroit District published a Notice to Navigation Interests indicating that the Government would no longer provide pier line handlers. This amendment adds a requirement that vessels provide line handlers for passage through the locks and delineates the number of line handlers required based on weather and vessel conditions.

Paragraph (f) is being amended to restrict the use of bow and stern thrusters while the vessel is in the locks. The purpose of this change is to reduce the negative effects caused by the currents and water movement created by use of thrusters that may damage the locks walls and gates. Restrictions on the use of bow/stern thrusters were first published in a Notice to Navigation Interests in 1978.

Paragraph (h) is being amended to establish a procedure for the order of departure for vessels attempting to leave the MacArthur and Poe Locks simultaneously. This procedure is a safety measure to prevent two vessels from being in the lock canals at the same time. The procedure was published in a Notice to Navigation Interests dated April 19, 1996.

Paragraph (r) is being amended to establish a tug-assist requirement for vessels without bow and stern thrusters and for other types of powered vessels that may have difficulty maneuvering in close quarters while navigating at low speed. High winds, changing currents and inclement weather may affect a vessel's ability to maneuver within close quarters while at low speeds. This procedure was published in a Notice to Navigation Interests dated March 18, 1997.

This proposed rule is not a major rule for the purposes of Executive Order 12866. As required by the Regulatory Flexibility Act, the Corps of Engineers certifies that this proposed rule will not have a significant impact on small business entities.

**List of Subjects in 33 CFR Part 207**

Navigation (water), Water transportation, Vessels.

For reasons set out in the preamble, Title 33, Chapter II of the Code of Federal Regulations is proposed to be amended as follows:

## PART 207—NAVIGATION REGULATIONS

1. The authority citation for part 207 continues to read as follows:

**Authority:** 28 Stat. 362 (33 U.S.C. 1).

2. Section 207.440 is amended by revising paragraphs (c), (e), (f), (h) and (r) to read as follows:

### § 207.440 St. Marys Falls Canal and Locks, Mich.; use, administration, and navigation.

* * * * *

(c) Upon approaching the canal, vessel masters shall request lock dispatch by radiotelephone to the Corps of Engineers Chief Lockmaster at St. Marys Falls Canal dispatch tower (Radio Call WUE–21). Every up bound vessel requiring lock transit shall request lock dispatch immediately before initiating the turn at Mission Point at the intersection of Course 1, Bayfield Channel, and Course 2, Little Rapids Cut. Every down bound vessel shall call when approximately one-half mile downstream from Big Point.

* * * * *

(e)(1) *Manning requirements.* On all vessels of 400 gross tons or over navigating the canal under their own power, the following ship's officers shall be on duty: In the pilot house, on the bridge, or in the immediate vicinity thereof, the master, one mate, and one wheelsman; in the engine room, the chief engineer, one assistant engineer, and one oiler or other member of the crew familiar with the operation of the engine. During transit of the locks, all vessels of 400 gross tons or over equipped with power operated mooring deck winches shall have, in addition to the winch operators, mates or signalman at the forward and after ends of the vessel to direct operations from points providing maximum vision of both the winch operators and canal linesmen.

(2) *Linehandlers.*—(i) *Cargo vessels equipped with bow thrusters and friction winches.* Two line handlers from the vessel are required on the piers under normal weather conditions. Lockmasters can ask for three persons under severe weather conditions. If a vessel is experiencing mechanical problems or in extreme severe weather situations, the lockmaster may require four vessel-supplied line handlers on the pier.

(ii) *Vessels with non-friction winches or lack of both bow and stern thrusters.* Four vessel-supplied line handlers are required on the pier at all times.

(f) *Vessel restrictions.* (1) *Speed limits.* Within the limits of the canal, vessels approaching the locks shall not navigate at a speed greater than 2½ miles per hour, and vessels leaving the locks shall not navigate at a speed greater than 6 miles per hour. Tugs assisting vessels in passing through the locks may be authorized by the District Engineer or his authorized agents to navigate at a higher speed when considered necessary to expedite canal operations.

(2) *Use of bow/stern thrusters.* Bow and/or stern thruster use shall be kept to a minimum while transiting the Soo Locks. Thrusters shall not be used while the thrusters are opposite lock gates. They may be used sparingly for short durations within the lock to maintain the ship position near the mooring wall or in an emergency. Thrusters shall be at zero thrust during the period the ship is stopped and moored to the wall with all lines out, and during raising and lowering of pool levels within the chamber.

* * * * *

(h) *Vessel lockage order.* (1) *Arrival.* All registered vessels will be passed through the locks in the order of their arrival at the dispatch point unless otherwise directed by the District Engineer or his authorized agents. When a vessel that has stopped on its own business is ready to proceed, it is not entitled to precedence over other vessels already dispatched.

(2) *Departure.* The following order of departure procedure will apply to vessels leaving the MacArthur Lock and Poe Lock simultaneously or at approximately the same time:

(i) The first vessel to leave will be the vessel in the lock which is ready for vessel release first. The vessel in the other lock will be restrained by the gates remaining closed and the wire rope fender remaining in the down position.

(A) On down bound passages, the vessel retained shall not leave the lock until such time as the bow of the vessel leaving first reaches the end of the East Center pier.

(B) On up bound passages, the vessel retained shall not leave the lock until such time as the bow of the vessel leaving first reaches the railroad bridge.

(ii) When a 1,000 foot vessel is ready to depart the Poe Lock and a vessel has left the MacArthur Lock already, the 1,000 foot vessel may start to leave once the bow of the other vessel reaches the end of the respective nose pier.

(A) Vessels will remain in radio contact with each other and with the Chief Lockmaster at all times until clear of the lock area.

(B) The need for a deviation from the procedures set forth in

§§ 207.440(h)(2)(i)(A) and (B) and 207.440(h)(2)(i) will be determined on a case by case basis by the Chief Lockmaster.

* * * * *

(r) *Tug assist procedure.* (1) *Self-powered vessels.* Mariners are advised that oftentimes adverse local weather conditions, i.e., high winds, current conditions and/or inclement weather, exists as vessels approach, enter and/or depart the Soo Locks. These conditions combined with close quarters slow speed maneuvering, particularly with large vessels not equipped with bow or stern thrusters, may cause control difficulties for certain classes of vessels. Therefore, any vessel requesting lockage which in the opinion of the Vessel Master in consultation with the Pilot on board, where applicable may experience severe control problems due to the above conditions, must request assistance by one or more tugs to ensure full control over the vessel at all times. Vessel Masters and Pilots must consult with the Lockmaster concerning local conditions well in advance of arrival at the lock to allow tug assistance to be arranged if necessary. These guidelines apply to all vessels.

(2) *Non self-powered vessels.* All barges or other vessels navigating within the canal and not operating under their own power, whether approaching or leaving the locks, are required to be assisted by one or more tugs of sufficient power to insure full control at all times.

* * * * *

Dated: August 26, 1999.

**Eric R. Potts,**

*Colonel, U.S. Army, Executive Director of Civil Works.*

[FR Doc. 99–22622 Filed 8–30–99; 8:45 am]

BILLING CODE 3710–GA–P

## ENVIRONMENTAL PROTECTION AGENCY

## 40 CFR Part 52

**[CA 217–0170b; FRL–6423–2]**

## Approval and Promulgation of State Implementation Plans; California State Implementation Plan Revision, South Coast Air Quality Management District

**AGENCY:** Environmental Protection Agency (EPA).

**ACTION:** Proposed rule.

**SUMMARY:** EPA proposes to approve a revision to the California State Implementation Plan (SIP) which concerns the control of volatile organic compound (VOC) emissions from commercial and industrial adhesive applications.

The intended effect of this action is to regulate emissions of VOCs in accordance with the requirements of the Clean Air Act, as amended in 1990 (CAA or the Act). In the Final Rules section of this **Federal Register**, the EPA is approving the state's SIP submittal as a direct final rule without prior proposal because the Agency views this as a noncontroversial revision and anticipates no adverse comments. A detailed rationale for this approval is set forth in the direct final rule. If no adverse comments are received, no further activity is contemplated. If EPA receives adverse comments, the direct final rule will be withdrawn and all public comments received will be addressed in a subsequent final rule based on this proposed rule. The EPA will not institute a second comment period. Any parties interested in commenting should do so at this time.

**DATES:** Written comments must be received by September 30, 1999.

**ADDRESSES:** Comments should be addressed to: Andrew Steckel, Rulemaking Office (AIR–4), Air Division, U.S. Environmental Protection Agency, Region IX, 75 Hawthorne Street, San Francisco, CA 94105–3901.

Copies of the rule revisions and EPA's evaluation report of the rule are available for public inspection at EPA's Region IX office during normal business hours. Copies of the submitted rule revisions are also available for inspection at the following locations:

California Air Resources Board, Stationary Source Division, Rule Evaluation Section, 2020 ''L'' Street, Sacramento, CA 95812.

South Coast Air Quality Management District, 21865 E. Copley Drive, Diamond Bar, CA 91765.

**FOR FURTHER INFORMATION CONTACT:** Yvonne Fong, Rulemaking Office (AIR–4), Air Division, U.S. Environmental Protection Agency, Region IX, 75 Hawthorne Street, San Francisco, CA 94105–3901, Telephone: (415) 744–1199.

**SUPPLEMENTARY INFORMATION:** This document concerns South Coast Air Quality Management District Rule 1168, Adhesive Applications, submitted to EPA on September 29, 1998 by the California Air Resources Board. For further information, please see the information provided in the direct final action that is located in the rules section of this **Federal Register**.

Dated: August 6, 1999.

**Felicia Marcus,**

*Regional Administrator, Region IX.*

[FR Doc. 99–22180 Filed 8–30–99; 8:45 am]

BILLING CODE 6560–50–P

## ENVIRONMENTAL PROTECTION AGENCY

## 40 CFR Part 52

**[CA 224–0166b; FRL–6425–6]**

## Approval and Promulgation of Implementation Plans; California State Implementation Plan Revision, South Coast Air Quality Management District, Ventura County Air Pollution Control District

**AGENCY:** Environmental Protection Agency (EPA).

**ACTION:** Proposed rule.

**SUMMARY:** EPA proposes to approve revisions to the California State Implementation Plan (SIP) which concern the control of volatile organic compound (VOC) emissions from pleasure craft coating operations.

The intended effect of this action is to regulate emissions of VOCs according to the requirements of the Clean Air Act, as amended in 1990 (CAA or the Act). In the Final Rules Section of this **Federal Register**, the EPA is approving the state's SIP submittal as a direct final rule without prior proposal because the Agency views this as a noncontroversial revision and anticipates no adverse comments. A detailed rationale for this approval is set forth in the direct final rule. If no adverse comments are received, no further activity is contemplated. If EPA receives adverse comments, the direct final rule will be withdrawn and all public comments received will be addressed in a subsequent final rule based on this proposed rule. The EPA will not institute a second comment period. Any parties interested in commenting should do so at this time.

**DATES:** Written comments must be received by September 30, 1999.

**ADDRESSES:** Comments should be addressed to Andrew Steckel, Rulemaking Office (AIR–4), Air Division, U.S. Environmental Protection Agency, Region IX, 75 Hawthorne Street, San Francisco, CA 94105–3901.

Copies of the rule revisions and EPA's evaluation report of each rule are available for public inspection at EPA's Region 9 office during normal business hours. Copies of the submitted rule revisions are also available for inspection at the following locations:

California Air Resources Board, Stationary Source Division, Rule Evaluation Section, 2020 ''L'' Street, Sacramento, CA 95812;
South Coast Air Quality Management District, 21865 East Copley Drive, Diamond Bar, CA 91765–4182; and,
Ventura County Air Pollution Control District, 669 County Square Drive, Ventura, CA 93003.

**FOR FURTHER INFORMATION CONTACT:** Jerald S. Wamsley, Rulemaking Office, [AIR–4], Air Division, U.S. Environmental Protection Agency, Region 9, 75 Hawthorne Street, San Francisco, CA 94105–3901, Telephone: (415) 744–1226.

**SUPPLEMENTARY INFORMATION:** This document concerns South Coast Air Quality Management District (SCAQMD) Rule 1106.1—Pleasure Craft Coating Operations and Ventura County Air Pollution Control District (VCAPCD) Rule 74.24.1—Pleasure Craft Coating and Commercial Boatyard Operations. The California Air Resources Board (CARB) submitted these rules to EPA on June 3, 1999 and February 16, 1999, respectively. For further information, please see the information provided in the direct final action that is located in the rules section of this **Federal Register**.

Dated: August 6, 1999.

**Laura Yoshii,**

*Acting Regional Administrator, Region IX.*

[FR Doc. 99–22184 Filed 8–30–99; 8:45 am]

BILLING CODE 6560–50–P

---

## ENVIRONMENTAL PROTECTION AGENCY

## 40 CFR Parts 52 and 60

**[ND–001–0006b; FRL–6426–4]**

## Clean Air Act Approval and Promulgation of Air Quality Implementation Plan Revision for North Dakota; Revisions to the Air Pollution Control Rules; Delegation of Authority for New Source Performance Standards

**AGENCY:** Environmental Protection Agency (EPA).

**ACTION:** Proposed rule.

**SUMMARY:** EPA proposes to approve revisions to the State Implementation Plan (SIP) submitted by the Governor of North Dakota with a letter dated September 28, 1998. The revisions affect air pollution control rules regarding general provisions, the State $SO_2$ ambient air quality standard, emissions of particulate matter and organic compounds, and permits to construct. EPA will handle separately the revisions to the Title V operating permit program, a direct delegation request for emission standards for hazardous air pollutants for source categories, and the State's plan for hospital, medical, and infectious waste incinerators.

Finally, EPA is providing notice that on May 7, 1999, North Dakota was delegated authority to implement and enforce the New Source Performance Standards (NSPS) in 40 CFR part 60, as of November 1, 1997 (excluding subpart Eb).

In the Final Rules section of this **Federal Register**, EPA is approving the State's SIP revision as a direct final rule without prior proposal because the Agency views this as a noncontroversial SIP revision and anticipates no adverse comments. A detailed rationale for the approval is set forth in the direct final rule. If no adverse comments are received in response to this proposed rule, no further activity is contemplated in relation to this rule. If EPA receives adverse comments, the direct final rule will be withdrawn and all public comments received will be addressed in a subsequent final rule based on this proposed rule. EPA will not institute a second comment period on this action. Any parties interested in commenting on this action should do so at this time.

**DATES:** Comments must be received in writing on or before September 30, 1999.

**ADDRESSES:** Written comments may be mailed to Richard R. Long, Director, Air and Radiation Program, Mailcode 8P–AR, Environmental Protection Agency (EPA), Region VIII, 999 18th Street, suite 500, Denver, Colorado, 80202. Copies of the documents relevant to this action are available for public inspection during normal business hours at the Air and Radiation Program, Environmental Protection Agency, Region VIII, 999 18th Street, suite 500, Denver, Colorado, 80202. Copies of the State documents relevant to this action are available for public inspection at the North Dakota State Department of Health, Division of Environmental Engineering, 1200 Missouri Avenue, Bismarck, North Dakota 58506.

**FOR FURTHER INFORMATION CONTACT:** Amy Platt, EPA, Region VIII, (303) 312–6449.

**SUPPLEMENTARY INFORMATION:** See the information provided in the Direct Final action of the same title which is located in the Rules and Regulations section of this **Federal Register**.

**Authority:** 42 U.S.C. 7401 et seq.

Dated: August 5, 1999.

**Jack W. McGraw,**

*Acting Regional Administrator, Region VIII.*

[FR Doc. 99–22178 Filed 8–30–99; 8:45 am]

BILLING CODE 6560–50–P

---

## ENVIRONMENTAL PROTECTION AGENCY

## 40 CFR Part 300

**[FRL–6429–2]**

## National Oil and Hazardous Substances Pollution Contingency Plan; National Priorities List

**AGENCY:** Environmental Protection Agency.

**ACTION:** Notice of intent to delete the PAB Oil and Chemical Services, Inc. superfund site from the National Priorities List and request for comments.

**SUMMARY:** The U.S. Environmental Protection Agency (EPA) Region 6 announces its intent to delete the PAB Oil and Chemical Services, Inc. Superfund Site (the ''Site'') from the National Priorities List (NPL) and requests public comment on this proposed action. All public comments regarding this proposed action which are submitted within 30 days of the date of this notice, to the address indicated below, will be considered by EPA. The NPL, promulgated pursuant to section 105 of the Comprehensive Environmental Response, Compensation, and Liability Act (CERCLA) of 1980, as amended, 42 U.S.C. 9605, is codified at appendix B of 40 CFR part 300 which is the National Oil and Hazardous Substances Pollution Contingency Plan (NCP). The EPA in consultation with the State of Louisiana, through the Louisiana Department of Environmental Quality (LDEQ), has determined that no further response is appropriate, and that, consequently, the Site should be deleted from the NPL.

**DATES:** Comments should be submitted regarding its proposal to delete this Site from the NPL on or before September 30, 1999.

**ADDRESSES:** Comments may be mailed to: Ms. Janetta Coats, Community Involvement Coordinator (6SF–PO), U.S. Environmental Protection Agency, Region 6, 1445 Ross Avenue, Dallas, Texas 75202–2733, (214) 665–7308.

### Information Repositories

Comprehensive information on the Site has been compiled in a public deletion docket which may be reviewed and copied during normal business hours at the following PAB Oil and

Chemical Services, Inc., Superfund Site information repositories:

U.S. EPA Region 6 Library (12th Floor), 1445 Ross Avenue, Dallas, Texas 75202–2733, 1–800–533–3508; and

Vermilion Parish Public Library, 200 N. Magdalen Square, Abbeville, Louisiana 70511, (318) 893–2674.

**FOR FURTHER INFORMATION CONTACT:** Ms. Caroline A. Ziegler, Remedial Project Manager (6SF–LP), U.S. Environmental Protection Agency, Region 6, 1445 Ross Avenue, Dallas, Texas 75202–2733, (214) 665–2178.

**SUPPLEMENTARY INFORMATION:**

## Table of Contents

I. Introduction
II. NPL Deletion Criteria
III. Deletion Procedures
IV. Basis for Intended Site Deletion

**Appendices**

A. Site Map
B. Deletion Docket Information

## I. Introduction

This is the Region 6 Notice of Intent to Delete (NOID) the Site from the NPL. The NPL is the list, compiled by EPA pursuant to CERCLA section 105, of uncontrolled hazardous substance releases in the United States that are priorities for long-term remedial evaluation and response. As described in 40 CFR 300.425(e)(3) of the NCP, sites deleted from the NPL remain eligible for remedial actions in the unlikely event that conditions at the site warrant such action.

The EPA will consider comments concerning this NOID which are submitted within thirty days of the date of this NOID. The EPA has also published a notice of the availability of this NOID in a major local newspaper of general circulation at or near the Site.

Section II of this NOID explains the NCP criteria for deleting sites from the NPL. Section III discusses procedures that EPA is using for this action. Section IV discusses the PAB Oil and Chemical Services, Inc., Superfund Site and explains that the Site meets the NCP deletion criteria.

## II. NPL Deletion Criteria

The NCP, at 40 CFR 300.425(e), provides that releases may be deleted from the NPL where no further response is appropriate. In making a determination to delete a release from the NPL, EPA shall consider, in consultation with the State, whether any of the following criteria have been met:

i. Responsible parties or other persons have implemented all appropriate response actions required;

ii. All appropriate Fund-financed [1] response under CERCLA has been implemented, and no further action by responsible parties is appropriate; or

iii. The remedial investigation has shown that the release poses no significant threat to public health or the environment and, therefore, taking of remedial measures is not appropriate.

If, at the site of a release, EPA selects a remedial action that results in any hazardous substances, pollutants, or contaminants remaining at the site, CERCLA subsection 121(c), 42 U.S.C. 121(c), requires that EPA review such remedial action no less often than each five years to assure that human health and the environment are being protected by the remedial action. Since hazardous substances will remain at the Site,[2] EPA shall conduct such reviews. If new information becomes available which indicates a need for further action, EPA may initiate remedial actions. Whenever there is a significant release from a site deleted from the NPL, the site may be restored to the NPL without application of the Hazard Ranking System.[3]

## III. Deletion Procedures

The EPA followed these procedures regarding the proposed deletion:

(1) EPA Region 6 made a determination that no further response action is appropriate and that the Site may be deleted from the NPL;

(2) EPA has consulted with LDEQ, and by letter dated July 14, 1999, LDEQ concurred in EPA's deletion decision;

(3) EPA has published, in a major local newspaper of general circulation at or near the Site, a notice of availability of the NOID, which includes an announcement of a 30-day public comment period regarding the NOID, and EPA distributed the NOID to appropriate State, local and Federal officials, and to other interested parties; and,

(4) EPA placed copies of information supporting the proposed deletion (i.e., the public deletion docket) in the Site information repositories (the locations of these repositories are identified above).

Deletion of a site from the NPL does not itself create, alter, or revoke any individual's rights or obligations. The NPL is designed primarily for informational purposes and to assist EPA management. As mentioned in Section II of this Notice, 40 CFR 300.425(e)(3) of the NCP states that the deletion of a site from the NPL does not preclude eligibility of the site for future response actions.

The EPA Region 6 will accept and evaluate public comments on this NOID before making a final decision to delete. If necessary, EPA will prepare a Responsiveness Summary to address any significant public comments received.

Deletion of the Site from the NPL will occur when the EPA Regional Administrator places a final notice in the **Federal Register**. Generally, the NPL will reflect deletions in the final update following the NOID. Public notices and copies of the Responsiveness Summary will be made available to local residents upon request to the EPA Remedial Project Manager, Caroline Ziegler, at the address listed above. These will also be placed in both repository locations listed above, where they can be obtained by request.

## IV. Basis for Intended Site Deletion

The following information provides the EPA's rationale for the proposal to delete the Site from the NPL.

### *A. Site Location*

The Site is located approximately three miles north of Abbeville, Louisiana, adjacent to U.S. Route 167, in Vermilion Parish. The site encompasses approximately 16.7 acres of land located in a generally rural area. Adjacent properties are used primarily for livestock grazing and crops. Residential properties are situated sparsely along U.S. Route 167 west of the site and Parish Road.

The majority of the Site had consisted of disposal pits/ponds and related berms or levees. The pits contained solid and/or liquid wastes that had the potential to migrate into the surrounding environment. The pits extended to within less than ten feet of a ground water-bearing zone in the area, the Upper Chicot Aquifer. Hazardous substances present in the pits, could have migrated into the Upper Chicot Aquifer. There are more than fifty-five residential wells within ½ mile of the Site used for drinking water and agricultural purposes.

### *B. Site History*

The Site was used for the disposal of oil and gas exploration and production wastes including drilling muds, drilling fluids and produced waters between

[1] The ''Fund'' referred to here is the Hazardous Substance Superfund established by section 9507 of the Internal Revenue Code of 1986.

[2] Hazardous substances remain on the Site under a multi-layer soil cap which covers approximately seven acres of the Site. EPA considers the cap to be protective; nonetheless, since hazardous substances will remain on the Site, EPA must conduct the CERCLA-required five-year reviews.

[3] The Hazardous Ranking System is the method used by EPA to evaluate the relative potential of hazardous substance releases to cause health or safety problems, or ecological or environmental damage.

1979 and 1983. The Site consisted of three impoundments or pits that were used to receive the drilling wastes: Northwest, Northeast and South pits. The pits are believed to have been operated in series—where the solids would settle out, oil would be skimmed off and the remaining water flowed to the next pit through connecting piping. The series began in the Northwest pit and ended in the South pit. The Site also contained one other impounded area called the Saltwater Pond. This area was used to receive produced water (i.e., production waters generated from oil field activites) and the residual water from the South pit during the years of operation.

In June, 1980, a citizen's complaint of discharge from the site to an off-site drainage ditch led to site identification by EPA. As a result, site inspections were conducted by EPA, the Louisiana Department of Natural Resources (LDNR) and the Louisiana Department of Environmental Quality (LDEQ), including initial preliminary assessments, sampling inspections and expanded site inspections during the time period between 1980 and August 1987. Significant inorganic contamination was found at the Site. The main contaminants included arsenic, barium, cadmium, chromium, copper, lead, mercury, zinc, benzene, xylene, naphthalene, 2-methylnaphthalene, fluorene, phenanthrene, and pyrene. Based in part on the findings from these investigations, the site was proposed to the Superfund National Priorities List (NPL) in June, 1988. The Site was finalized on the NPL in March, 1989, 54 FR 13296, as set forth at 40 CFR part 300, appendix B.

An emergency removal action was conducted by the Potentially Responsible Party (PRP) group in accordance with an Administrative Order on Consent (AOC), effective date October 8, 1991. Four tanks were present on site and were the target of the removal action. Three of the four tanks were located in a bermed area near the Northwest pit and the fourth tank was located at the northwest corner of the Saltwater Pond. Two of the larger tanks in the bermed area contained only minor amounts of material, but the third tank contained an estimated 10,500 gallons of an oil and waste mixture. The ''oil'' phase of this waste mixture had a measured flash point of 90 °F. Materials with flash points below 140 °F are potential fire or explosion threats. In the event of tank collapse, fumes from a fire or explosion could drift off-site. There are residences nearby and a highway borders the Site. In addition, the tank contents could flow through breaks in the dikes into the saltwater pond and via surface drainage into the nearby irrigation canals, resulting in the potential for direct human contact. The fourth tank had a capacity of about 250 gallons and reportedly contained about 85 gallons of sludge/oil mixture and a thin layer of oil on top. Analysis of the contents of this fourth tank indicated the presence of the following parameters: chromium, lead, benzene, xylene, naphthalene and toluene. All of these substances are listed in 40 CFR Table 302.4 as hazardous substances. It was deemed necessary to perform the removal action due to the potential for release of these hazardous substances to the environment. The removal action was deemed complete by EPA in February 1992.

Remedial Investigation (RI) field activities for the Site were conducted from January, 1991 through October, 1991 and the final report was issued in February, 1993. In association with the RI activities, a baseline risk assessment was prepared to evaluate the potential adverse health effects resulting from human exposure to hazardous substances found to be present at the site. In addition, an environmental baseline risk assessment was conducted to evaluate risks to environmental species.

The main site features or potential contaminant source areas that were identified and investigated as part of the RI field activities include three open waste impoundments or pits and their associated berms, another impounded area referred to as the Saltwater Pond, four aboveground storage tanks and their associated underlying soils, site drainage/runoff areas, an adjacent abandoned canal which borders the eastern edge of the site and other areas of suspected waste dumping. Additionally, on-site and off-site subsurface geologic and hydrogeologic conditions and contaminant impacts to groundwater were investigated through drilling of soil borings and the installation of groundwater monitoring wells. The result of the investigation indicated that the principal concerns were from contaminated sludges, soil and sediments, surface water, and to a lesser extent, ground water.

The EPA issued a Record of Decision (ROD)[4] on September 22, 1993. The selected remedy called for removal and on-site treatment of surface water; excavation and biological treatment of organic sludge, soil and sediment; solidification/stabilization of biologically treated residuals to address inorganic contamination and any remaining organic contaminants; final disposal of treated residuals in an on-site disposal unit; long-term ground water monitoring and long-term site operation and maintenance. The estimated cost of the cleanup was $13 million including annual operation and maintenance costs.

The biological treatment portion of the originally prescribed remedy was to treat all carcinogenic polycyclic aromatic hydrocarbons (cPAHs) in soils and sludges to below the established Remedial Action Objective (RAO) of 3 ppm. During pre-design investigation activities, new EPA-approved laboratory procedures for cPAHs which were not previously available during Remedial Investigation and Feasibility Study (RI/FS) activities were used to test the soils and sludges. The analytical data from this testing, which took place in 1993 and 1995, showed that all cPAHs in the site soils and sludges were below the RAO of 3 ppm. Biological treatment, therefore, was deemed unnecessary as part of the remedial action. All aspects of the remedy remained the same, with the exception of biological treatment, resulting in a cost savings of approximately $4 million dollars. This change to the remedy was made and documented in the Explanation of Significant Differences (ESD) signed by EPA on March 12, 1997.

On September 27, 1994, EPA issued a Unilateral Administrative Order (UAO) for Remedial Design and Remedial Action. It also included the performance of operation and maintenance subsequent to completion of implementation of the remedy. Under the terms of the UAO, the PRP group, known as PAB Site Remediation Group, L.L.C. (PAB Group) conducted the remedial action with EPA oversight. The remedial action began in June, 1997 with the site mobilization and ended in June, 1998 with the completion of capping, grading and revegetation.

Dewatering and backfilling of the Saltwater Pond began soon after site mobilization. Approximately six million gallons of water were removed from this large pond; all of the water was treated in an electro-precipitation unit and tested for the discharge standards prior to being discharged into a drainage ditch which leads to the drainage system along Highway 167.

The pond bottom sediment was sampled and tested for both total arsenic and barium, as well as for PAHs. Some of the samples exceeded the RAOs of 5,400 ppm for barium and 10 ppm for arsenic. Therefore, the top six inches of

[4] EPA's Record of Decision documents the selection of the remedial alternative which will be used to cleanup the site in question.

the entire saltwater pond bottom was removed, and this material was incorporated into the soils/sludges that were being treated by solidification/stabilization in the pit area. Approximately 7,000 cubic yards of this material were treated. The entire area was then brought up to grade with clean backfill and revegetated with grass seed.

The major component of the remedial program was to stabilize/solidify the sludge pit material. The contaminated soils and sludges were combined with reagent materials including cement, ferrous sulfate, and organophyllic clay in order to achieve the main performance standards which included an unconfined compressive strength exceeding 50 psi and Toxicity Characteristic Leaching Procedure (TCLP) values for arsenic and barium of less than 0.05 ppm and 2.0 ppm, respectively. Once the treated material was tested and found to meet these standards, it was placed back into the pit area for final disposal, after verification sampling of the pit bottoms was conducted and found to be free of contamination. A total of approximately 25,000 cubic yards of material was treated in this manner. Once the pits were filled up with treated material, all of the pits were brought up to grade and the low permeability cap was installed according to the approved grading specifications. A topsoil layer was then applied, and the area was revegetated with grass seed.

The cleanup levels and all cleanup actions and other measures identified in the ROD were met by the successful implementation of the remedial action. The constructed remedies are operational and performing according to engineering specifications. The EPA and the LDEQ have determined that the remedy, which includes long-term groundwater monitoring as well as an inspection and maintenance program for the Site, is performing as designed, and is operational and functional. No additional treatment or other measures to restore ground-or surface-water quality have been identified as being required.

*C. Characterization of Risk*

Continued monitoring of groundwater demonstrates that no significant risk to public health or the environment is posed by the hazardous materials remaining at the Site. Based on the successful remedial actions addressing the hazardous materials onsite, the monitoring results of operation and maintenance (O & M) activities to date, and the public health consultation by the Agency for Toxic Substances and Disease Registry (ATSDR), EPA verifies the implemented Site remedy is protective of human health and the environment.

*D. Community Involvement*

As required in CERCLA section 113(k)(2)(B)(i–v) and 117, public participation activities for this site were met by holding open houses and public meetings and by mailing fact sheets. The EPA conducted numerous open houses and informal meetings prior to remedy selection. Community interest in the site has been relatively low. At the November 8, 1997 community open house, EPA reported on the progress of the remedial action underway at that time. The majority of the people attending were pleased with the site status. There were no complaints or opposition.

Documents in the deletion docket on which EPA relied for recommendation of the Site deletion from the NPL have been made available to the public in the two information repositories, the location of which is identified above.

*E. Proposed Action*

In consultation with the LDEQ, EPA has concluded that responsible parties have implemented all appropriate response actions required at the Site (neither the CERCLA-required five-year reviews, nor operation and maintenance of the constructed remedy is considered further response action for these purposes), that all appropriate Fund-financed response actions under CERCLA have been implemented, and that no further response action by responsible parties is appropriate.

Moreover, EPA, in consultation with LDEQ, has determined that Site investigations show that the Site now poses no significant threat to public health or the environment. Consequently, EPA proposes to delete the Site from the NPL.

Dated: August 16, 1999.

**Jerry Clifford,**

*Deputy Regional Administrator, Region 6.*

BILLING CODE 6560–50–P

## APPENDIX A

## PAB OIL AND CHEMICAL SERVICES, INC. SITE MAP

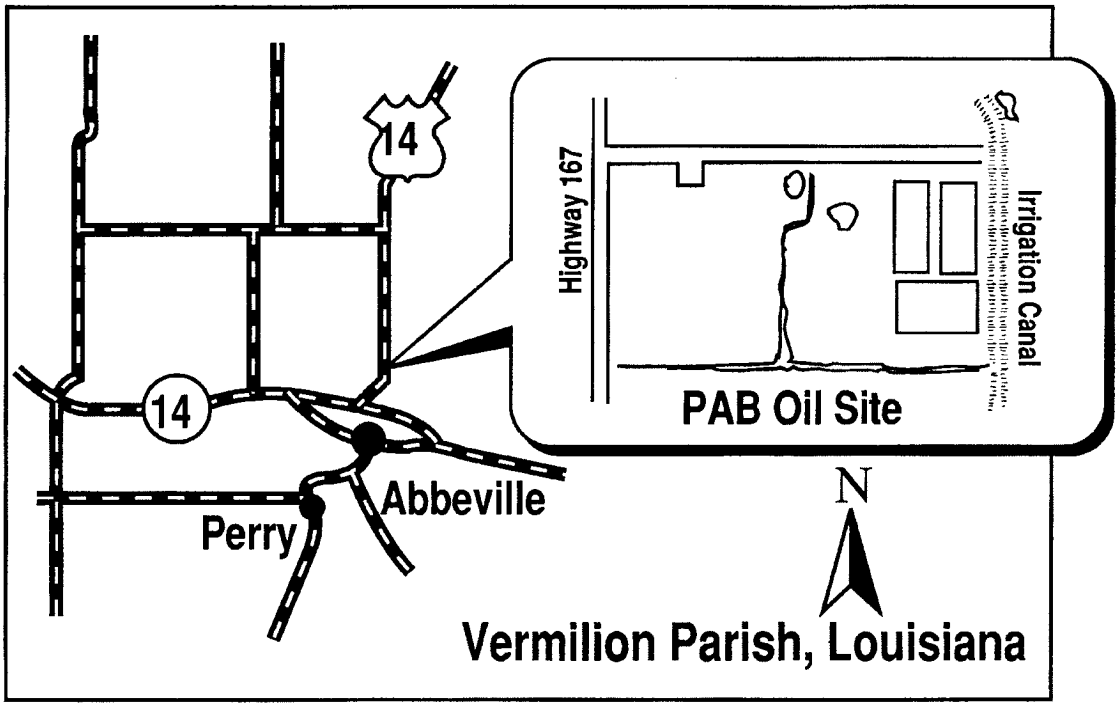

APPENDIX B

PAB OIL AND CHEMICAL SERVICES, INC. DELETION DOCKET INDEX

**Prepared for**

**United States Environmental Protection Agency**

**Region 6**

**Deletion Docket**
**for**

**PAB Oil and Chemical Service, Inc. Superfund Site**
**EPA ID No. LAD980749139**

**ESS VI**
**Work Assignment No. ESS8033**

**Caroline A. Ziegler**
**Remedial Project Manager**
**U.S. EPA Region 6**

**Prepared by**

**TechLaw, Incorporated**
**750 N. St. Paul Street, Suite 600**
**Dallas, Texas 75201**

**August 10, 1999**

## INTRODUCTION

The public is provided herewith copies of information supporting the proposed deletion of part of the PAB Oil and Chemical Service, Inc. Superfund site (the "Site") from the National Priorities List (NPL). This information is referred to herein as the deletion docket.

Section 105 of the Comprehensive Environmental Response, Compensation, and Liability Act of 1980 (CERCLA), 42 U.S.C. Section 9605, requires the U.S. Environmental Protection Agency (EPA) to maintain the NPL. The NPL is the list of priority releases of hazardous substances, pollutants, or contaminants for long-term remedial evaluation and response under CERCLA.

The EPA may delete all or part of a site from the NPL if it determines that no further response is appropriate at the site, or at the portion of the site in question. For further information regarding deletion, see the EPA guidance document entitled, "Close Out Procedures for National Priorities List Sites" (August 1996) produced by EPA's Office of Solid Waste and Emergency Response, and see also 60 Fed. Reg. 55466 (November 1, 1995).

To ensure public involvement during the proposal to delete all or part of the site of a release from the NPL, EPA must place copies of information supporting the proposed deletion in an information repository at or near the site so that the public may inspect and copy the information. Accordingly, EPA has made the attached deletion docket, along with the attached index to the deletion docket, available at the following repositories:

Vermilion Parish Library
200 North Street
Abbeville, Louisiana 70510
(318) 893-2674

Louisiana Department of Environmental Quality-Inactive and Abandoned Sites Division
7290 Bluebonnet Road, 4th Floor
Baton Rouge, Louisiana 70809
(225) 765-0487

The public may also review the deletion docket at EPA Region 6 offices in Dallas, Texas by contacting the Remedial Project Manager (RPM), Ms. Caroline A. Ziegler at:

U.S. EPA Region 6
1445 Ross Avenue, Suite 1200
Dallas, Texas 75202-2733
(214) 665-2178

The deletion docket for the site is available for inspection and copying at the above locations during normal business hours. The deletion docket is treated as a non-circulating reference document. Any document in the deletion docket may be photocopied according to procedures listed in the repository or at EPA Region 6 offices. EPA guidance documents relied upon by EPA in making this deletion decision, including those guidance documents referenced in this introduction or in any other deletion docket documents, are incorporated by reference as a part of the deletion docket, but may not be physically included among the documents placed at the repositories. Such guidance documents will be sent to the repositories upon request to the Remedial Project Manager (RPM) at the address given above, or furnished directly to the requestor.

EPA will respond to each significant comment and any significant new data submitted during the comment period, and EPA will include its response document in the final deletion package. EPA will place the final deletion package in the local information repositories once the notice of final deletion has been placed in the Federal Register. If you have any questions, call the RPM at the telephone number given above.

The deletion docket index helps readers locate and retrieve documents in the docket. The index includes the following information for each document:

- **Page No.** - The sequential numbers stamped on each page of the deletion docket. The six digit numbers are located in the upper right corner of each page.
- **Document Date** - The date the document was published and/or released. "01/01/3333" means no date recorded.
- **Number of Pages** - Total number of printed pages in the document, including attachments.
- **Author** - Name, title and affiliation of author.
- **Recipient** - Name, title and affiliation of recipient
- **Document Type** - General identification, e.g., Correspondence, report/study, etc.
- **Document Title** - Descriptive title or synopsis.

# ADMINISTRATIVE RECORD INDEX

## FINAL 8/10/1999

### DELETION DOCKET

**Site Name:** LAD980749139 - PAB OIL & CHEMICAL SERVICES, INC.
**SSID:** 06D5 - PAB OIL & CHEMICAL SERVICES, INC.
**Oper Unit:** N/A

---

**Bates:** 000001
**Date:** 01/01/3333
**Pages:** 1
**Title** PAB OIL AND CHEMICAL SERVICE, INC SUPERFUND SITE DELETION FROM THE NATIONAL PRIORITIES LIST (ENCLOSURE NOT INCLUDED WITH LETTER)
**Doc Type:** CORRESPONDENCE
**Author(s):**
**Name:** KNUDSON, P.E., MYRON O
**Organization:** U.S. EPA
**JobTitle:** DIRECTOR
**Department(s)**
REGION 6
SUPERFUND DIVISION
**Recipient(s):**
**Name:** GIVENS, DALE
**Organization:** LOUISIANA DEPARTMENT OF ENVIRONMENTAL QUALITY (LDEQ)
**JobTitle:** SECRETARY
**Location(s)**
BATON ROUGE, LOUISIANA

---

**Bates:** **From:** 000002 **To:** 000103
**Date:** 08/01/1995
**Pages:** 102
**Title** CLOSE OUT PROCEDURES FOR NATIONAL PRIORITIES LIST SITES
**Doc Type:** REPORT
**Author(s):**
**Name:** N/A,
**Organization:** U.S. EPA
**JobTitle:** N/A
**Department(s)**
HEADQUARTERS
OFFICE OF EMERGENCY AND REMEDIAL RESPONSE
**Location(s)**
WASHINGTON D.C.
**Recipient(s):**
**Name:** UNSPECIFIED,
**Organization:** N/A
**JobTitle:** N/A

# ADMINISTRATIVE RECORD INDEX

## FINAL 8/10/1999

### DELETION DOCKET

**Site Name:** LAD980749139 - PAB OIL & CHEMICAL SERVICES, INC.
**SSID:** 06D5 - PAB OIL & CHEMICAL SERVICES, INC.
**Oper Unit:** N/A

---

**Bates:** **From:** 000104 **To:** 000249
**Date:** 08/27/1998
**Pages:** 146
**Title** REMEDIAL ACTION REPORT
**Doc Type:** REPORT/STUDY
**Author(s):**
**Name:** N/A,
**Organization:** TRC ENVIRONMENTAL SOLUTIONS, INC.
**JobTitle:** N/A
**Location(s)**
IRVINE, CALIFORNIA
**Recipient(s):**
**Name:** N/A,
**Organization:** PAB SITE REMEDIATION GROUP, LLC.
**JobTitle:** N/A
**Location(s)**
ABBEVILLE, LOUISIANA

---

**Bates:** 000250
**Date:** 08/28/1998
**Pages:** 1
**Title** PAB OIL AND CHEMICAL SERVICES, INC SUPERFUND SITE (LAD980749139) - ACCEPTANCE OF THE REMEDIAL ACTION REPORT
**Doc Type:** CORRESPONDENCE
**Author(s):**
**Name:** ZIEGLER, CAROLINE
**Organization:** U.S. EPA
**JobTitle:** REMEDIAL PROJECT MANAGER
**Department(s)**
LOUISIANA SECTION
REGION 6
**Recipient(s):**
**Name:** EDLUND, CARL E
**Organization:** U.S. EPA
**JobTitle:** CHIEF
**Department(s)**
LOUISIANA/NEW MEXICO BRANCH
**Location(s)**
FILE

# ADMINISTRATIVE RECORD INDEX

## FINAL 8/10/1999

### DELETION DOCKET

**Site Name:** LAD980749139 - PAB OIL & CHEMICAL SERVICES, INC.
**SSID:** 06D5 - PAB OIL & CHEMICAL SERVICES, INC.
**Oper Unit:** N/A

---

**Bates:** **From:** 000251 **To:** 000262
**Date:** 08/28/1998
**Pages:** 12
**Title** FINAL CLOSE OUT REPORT
PAB OIL AND CHEMICAL SERVICES, INC SUPERFUND SITE
ABBEVILLE, LOUISIANA
**Doc Type:** REPORT/STUDY

**Author(s):**
**Name:** COOKE, GREGG A
**Organization:** U.S. EPA
**JobTitle:** REGIONAL ADMINISTRATOR
**Department(s)**
REGION 6

**Recipient(s):**
**Name:** UNSPECIFIED,
**Organization:** N/A
**JobTitle:** N/A

---

**Bates:** **From:** 000263 **To:** 000305
**Date:** 10/06/1998
**Pages:** 43
**Title** FINAL OPERATIONS AND MAINTENANCE PLAN (COVER LETTER INCLUDED)
**Doc Type:** CORRESPONDENCE
**Doc Type:** REPORT/STUDY

**Author(s):**
**Name:** N/A,
**Organization:** TRC ENVIRONMENTAL SOLUTIONS, INC.
**JobTitle:** N/A
**Location(s)**
IRVINE, CALIFORNIA

**Recipient(s):**
**Name:** N/A,
**Organization:** PAB SITE REMEDIATION GROUP, LLC.
**JobTitle:** N/A
**Location(s)**
ABBEVILLE, LOUISIANA

# ADMINISTRATIVE RECORD INDEX

## FINAL 8/10/1999

### DELETION DOCKET

**Site Name:** LAD980749139 - PAB OIL & CHEMICAL SERVICES, INC.
**SSID:** 06D5 - PAB OIL & CHEMICAL SERVICES, INC.
**Oper Unit:** N/A

---

**Bates:** **From:** 000306 **To:** 000313
**Date:** 12/14/1998
**Pages:** 8
**Title** FOURTH QUARTER 1998 INSPECTION REPORT OPERATIONS AND MAINTENANCE ACTIVITIES FOR PAB OIL AND CHEMICAL SERVICES, INC SITE LOCATED AT ABBEVILLE, LOUISIANA
**Doc Type:** REPORT/STUDY

**Author(s):**
**Name:** WEBSTER, IAN A
**Organization:** PROJECT NAVIGATOR, LTD
**JobTitle:** PAB GROUP PROJECT COORDINATOR

**Recipient(s):**
**Name:** ZIEGLER, CAROLINE
**Organization:** U.S. EPA
**JobTitle:** REMEDIAL PROJECT MANAGER
**Department(s)**
REGION 6

---

**Bates:** 000314
**Date:** 07/14/1999
**Pages:** 1
**Title** THE LOUISIANA DEPARTMENT OF ENVIRONMENTAL QUALITY IS CONCURRING WITH EPA'S DECISION TO DELETE THE SITE FROM THE NATIONAL PRIORITIES LIST
**Doc Type:** CORRESPONDENCE

**Author(s):**
**Name:** GIVENS, DALE
**Organization:** LOUISIANA DEPARTMENT OF ENVIRONMENTAL QUALITY
**JobTitle:** SECRETARY

**Recipient(s):**
**Name:** KNUDSON, P.E., MYRON O
**Organization:** U.S. EPA
**JobTitle:** DIRECTOR
**Department(s)**
REGION 6
SUPERFUND DIVISION

# ADMINISTRATIVE RECORD INDEX

## FINAL 8/10/1999

### DELETION DOCKET

**Site Name:** LAD980749139 - PAB OIL & CHEMICAL SERVICES, INC.
**SSID:** 06D5 - PAB OIL & CHEMICAL SERVICES, INC.
**Oper Unit:** N/A

**Bates:** **From:** 000315 **To:** 000322
**Date:** 08/10/1999
**Pages:** 8
**Title** DELETION DOCKET INDEX FOR PAB OIL AND CHEMICAL SERVICES, INC
**Doc Type:** INDEX

**Author(s):**
**Name:** N/A,
**Organization:** TECHLAW INCORPORATED
**JobTitle:** N/A

**Recipient(s):**
**Name:** ZIEGLER, CAROLINE
**Organization:** U.S. EPA
**JobTitle:** REMEDIAL PROJECT MANAGER
**Department(s)**
REGION 6

[FR Doc. 99–22318 Filed 8–30–99; 8:45 am]
BILLING CODE 6560–50–C

**ENVIRONMENTAL PROTECTION AGENCY**

**40 CFR Part 300**

**[FRL–6430–8]**

## National Oil and Hazardous Substances Pollution Contingency Plan; National Priorities List

**AGENCY:** Environmental Protection Agency.

**ACTION:** Notice of intent to delete Joseph Forest Products site from the National Priorities List; request for comments.

**SUMMARY:** The Environmental Protection Agency (EPA), Region 10, announces its intent to delete the Joseph Forest Products (JFP) Site in Wallowa County, Oregon from the National Priorities List (NPL) and requests public comment on this proposed action. The NPL constitutes appendix B of 40 CFR part 300 which is the National Oil and Hazardous Substances Pollution Contingency Plan (NCP) which EPA promulgated pursuant to section 105 of the Comprehensive Environmental Response, Compensation, and Liability Act (CERCLA) of 1980, as amended. EPA and the State of Oregon Department of Environmental Quality (ODEQ) have determined that the Site poses no significant threat to public health or the environment and, therefore, further remedial measures pursuant to CERCLA are not appropriate.

**DATES:** Comments concerning this Site may be submitted on or before September 30, 1999.

**ADDRESSES:** Comments may be mailed to Chip Humphrey, Environmental Protection Agency, 811 SW Sixth Avenue, Portland, Oregon 97204.

Comprehensive information on this Site is available through the Region 10 public docket which is available for viewing at the JFP Site information repositories at the following locations:

Wallowa County Planning Department, County Courthouse, Enterprise, Oregon 97828; or

United States Environmental Protection Agency, Region 10 Office of Environmental Cleanup—Records Center, Attn: Bob Phillips, 1200 Sixth Avenue, Mail Stop ECL–110, Seattle, Washington 98101.

**FOR FURTHER INFORMATION CONTACT:** Chip Humphrey, U.S. EPA Region 10, 811 SW Sixth Avenue, Portland, Oregon 97204, (503) 326–2678.

**SUPPLEMENTARY INFORMATION:**

### Table of Contents

I. Introduction
II. NPL Deletion Criteria
III. Deletion Procedures
IV. Basis of Intended Site Deletion

### I. Introduction

The Environmental Protection Agency (EPA), Region 10 announces its intent to delete the Joseph Forest Products Site (''Site''), located on Russell Lane approximately ¾ mile northwest of the City of Joseph in Wallowa County, Oregon, from the National Priorities List (NPL), appendix B of the National Oil and Hazardous Substances Pollution Contingency Plan (NCP), 40 CFR part 300, and requests comments to this deletion. EPA identifies sites on the NPL that appear to present a significant risk to human health or the environment. As described in § 300.425(e)(3) of the NCP, sites deleted from the NPL remain eligible for Fund-financed remedial actions in the unlikely event that conditions at the site warrant such actions.

EPA will accept comments on the plan to delete this Site for thirty days after publication of this document in the **Federal Register**.

Section II of this document explains the criteria for deleting sites from the NPL. Section III discusses procedures that EPA is using for this action. Section IV discusses the JFP Site and explains how the Site meets deletion criteria.

### II. NPL Deletion Criteria

Section 300.425 (e) of the NCP provides that ''releases'' (sites) may be deleted from, or recategorized on, the NPL where no further response is appropriate. In making a determination to delete a site from the NPL, EPA shall consider, in consultation with the state, whether any of the following criteria have been met:

(i) Responsible parties or other parties have implemented all appropriate response actions required;

(ii) All appropriate Fund-financed responses under CERCLA have been implemented, and no further action by responsible parties is appropriate; or

(iii) The remedial investigation has shown that the release poses no significant threat to public health or the environment and, therefore, taking of remedial measures is not appropriate.

Even if a site is deleted from the NPL, where hazardous substances, pollutants or contaminants remain at the site *above* levels that allow for unlimited use and unrestricted exposure, EPA's policy is that a subsequent review of the site will be conducted at least every five years after the initiation of the remedial action at the site to ensure that the site remains protective of public health and the environment. The first five-year review of the Site was completed in September 1998 in accordance with section 121 (c) of SARA. EPA concluded that the Joseph Forest Products Site remains protective of the human health and the environment. If, however, new information becomes available that indicates a need for further action, EPA may require remedial actions. Whenever there is a significant release from a site deleted from the NPL, the site may be restored to the NPL without the application of the Hazard Ranking System.

### III. Deletion Procedures

The following procedures were used for the intended deletion of this Site: (1) EPA Region 10 issued a final close out report documenting the achievement of cleanup goals; (2) the Oregon Department of Environmental Quality (ODEQ) concurred with the proposed deletion decision; (3) a notice has been published in the local newspaper and has been distributed to appropriate federal, state, and local officials and other interested parties announcing the commencement of a 30-day public comment period on EPA's Notice of Intent to Delete; and (4) all relevant documents have been made available for public review in the local Site information repository.

Deletion of the Site from the NPL does not itself, create, alter or revoke any individual rights or obligations. The NPL is designed primarily for information purposes to assist EPA management. As mentioned in section II of this document, 40 CFR 300.425(e)(3) states that deletion of a site from the NPL does not preclude eligibility for future Fund-financed response actions.

EPA's Regional Office will accept and evaluate public comments on EPA's Notice of Intent to Delete before making a final decision. The Agency will prepare a Responsiveness Summary if any significant public comments are received.

A deletion occurs when the Regional Administrator places a final notice in the **Federal Register**. Generally, the NPL will reflect deletions in the final update following the Notice. Public notices and copies of the Responsiveness Summary will be made available to local residents by EPA's Regional Office in Seattle, Washington.

### IV. Basis for Intended Site Deletion

The following Site summary provides the Agency's rationale for the intention to delete this Site from the NPL.

#### *A. Site Background*

The Joseph Forest Products (JFP) Superfund Site is located on Russell Lane about ¾ mile northwest of the City

of Joseph, in Wallowa County, Oregon. The Site is approximately 18 acres and encompasses an inactive wood-treating facility located at the site of a former lumber mill. The property is bounded by Russell Lane to the north, and is bordered by property owned by the Clifford C. Hinkley Estate on the east, Sequoia Forest Products to the south, and by the Joseph Airport to the west.

The Site is located within the City of Enterprise Watershed Protection Area. Two developed springs, located approximately 4,000 feet north of the JFP Site, supply municipal water to the City of Enterprise (population 2,121). The Wallowa River flows within 400 feet of the Site at its closest point on the eastern side.

*B. History*

The Joseph Forest Products Site was a former wood treatment facility which operated at this location from 1974 to 1985, using a vacuum-pressure (retort) treatment process. JFP used a water-based chromated copper arsenate preservative. Process wastes, including wood chips, sludge and other materials remaining in the retort, were periodically removed and placed in a cement pit adjacent to the east side of the treatment building.

The treatment building and surrounding buildings were destroyed by a fire in 1974. An estimated 200 gallons of concentrated treatment paste and approximately 3,000 gallons of treatment solution in the storage tank were lost. It is assumed that the material was washed onto nearby soil during fire fighting operations. JFP did not resume treatment operations until late 1977.

The Oregon DEQ issued JFP a Notice of Violation for unauthorized disposal and storage of hazardous waste in 1985. JFP responded by removing empty containers and arranging for disposal of chemical wastes from the Site. The company filed for bankruptcy and ceased operations in 1985. By late 1985, it had become apparent that JFP's insolvency would prevent any further corrective actions on the part of JFP.

An EPA site inspection was conducted from September 1985 through April 1986. Field activities during the SI included installation of monitoring wells and collection of samples of soil, surface water, and groundwater. Water level measurements from groundwater monitoring wells installed at the Site indicated a moderate gradient toward to the northeast in the shallow surficial aquifer. The principal contamination of concern identified in the SI was elevated levels of metals, primarily arsenic, chromium, and copper, in soils at the Site. In addition, the SI results indicated detectable levels of total metals in some groundwater and surface water samples. As a result of the SI and the subsequent HRS score, the JFP Site was nominated to the NPL.

The Joseph Forest Products Site was placed on the National Priorities List (NPL) in 1989. ICF Technology, an EPA contractor, was issued a work assignment by EPA to conduct a remedial investigation/feasibility study (RI/FS) of the Site in January 1990. The RI field investigation located and characterized highly contaminated soils in the treatment building and drip pad areas of the Site. The following summarizes the range (low-high) of soil contaminant concentrations (mg/kg) for the contaminants of concern from the first phase of the RI:

PHASE 1 RI SOIL CONTAMINANT CONCENTRATIONS

| Area | Arsenic | Chromium | Copper |
|---|---|---|---|
| Treatment Building | 641–104,000 | 412–46,100 | 405–33,300 |
| Drip Pad Area | 26–23,200 | 33–16,200 | 68–18,700 |
| Storage Areas | 6–661 | 14–781 | 33–825 |

Based on the results of the first phase of RI activities, a removal action was carried out by the EPA Emergency Response Contractor in October and November 1991. EPA determined that the removal action was necessary because the highly contaminated soils posed a threat to groundwater. Approximately 1,068 tons of highly contaminated soils adjacent to the treatment building and drip pad were excavated and transported to the ESI hazardous waste disposal facility in Idaho for disposal. Security fencing was also installed around the treatment building to prevent access. During the excavation it was determined that the treatment building foundation and soil beneath the building were also contaminated, and that the contaminated material could not be removed without demolishing the treatment building.

ICF Technology, the EPA contractor, collected and analyzed post-removal data for soils in the drip pad area, and completed the characterization of contamination at the treatment building, the lumber storage areas, and lumber drying building. Although a significant reduction in the volume of highly contaminated soil in the treatment building/drip pad areas was achieved during the removal action in the fall of 1991, highly contaminated soil (similar to pre-removal maximum values) remained where the soil was not removed. The contractor also performed quarterly monitoring of the monitor wells, on-site spring, and City of Enterprise water supply springs. Groundwater monitoring was performed in October 1990; January, April, and September 1991; and April 1992. Results for the October 1990 sampling event showed that monitoring well MW2, which is located directly downstream and adjacent to the treatment building location, showed levels of arsenic (82 ug/l and 168 ug/l for the sample and the sample duplicate, respectively) above the Safe Drinking Water Act Maximum Contaminant Level (MCL). Three on-site monitoring wells also showed total chromium levels slightly above the MCL. Results for the other sampling events showed very low but detectable levels of metals (below the MCL) for all of the on-site and off-site monitoring wells. There has been no evidence of contamination of the City of Enterprise's water supply.

The risk assessment indicated a potential risk of exposure by ingestion of soil and groundwater under current and future use scenarios. The greatest potential risk at the Site was due to carcinogenic and noncarcinogenic effects from ingestion of contaminated soils. Arsenic was the contaminant posing the greatest health risk.

The RI/FS were completed in September 1992. EPA issued a Proposed Plan describing the preferred alternative for Site cleanup in August 1992.

EPA issued a ROD on September 30, 1992 which selected the following remedy:

- Excavation of contaminated surface and subsurface soil to specified cleanup levels, demolition of the treatment building, decontamination of the drip pad and treatment equipment, and off-site disposal of soils and debris.

• Excavation of abandoned Underground Storage Tanks (USTs), decontamination of the tanks if any residuals are present, and transport of the tanks off-site for disposal or salvage as scrap metal. Contaminated soil would be excavated and disposed off-site.

• Removal of asbestos from the abandoned wood drying building and off-site disposal in a trench meeting regulatory requirements for asbestos waste disposal.

• Use of institutional controls such as deed restrictions, or use of an environmental notice to ensure appropriate consideration of Site conditions in future land use decisions.

• Implement a groundwater monitoring program to verify that contaminant levels in all wells and the City of Enterprise water supply allow for unlimited use.

The selected remedy eliminates the principal threat posed by the conditions at the Site by reducing the potential for human exposure to high concentrations of metals detected in the Site soils.

Based on the nature of the cleanup and EPA's desire to complete the remedy prior to the early summer high groundwater season, EPA decided to complete the remedy through a Removal Action. EPA executed an Interagency Agreement with the US Army Corps of Engineers (USACE) to carry out the remedy and a Final Project Work Plan was completed in February 1993. The JFP Site Removal Action was initiated on March 31, 1993. The removal action was carried out by OHM Remediation Services under a contract with the Corps of Engineers.

Demolition of the treatment building began on April 1, 1993. The wooden structure was completely removed and shredded and internal tanks were relocated to a staging area for cleaning. Contaminated pipes and pump equipment were stockpiled for disposal. The concrete slab and sump were broken and removed to a stockpile area.

The mixing tank, solution holding tank and retort vessel from the treatment building were cleaned using a vacublast system. The system used an aluminum oxide grit that was applied under pressure to the contaminated surface and collected the contaminated grit. After cleaning, the tanks were inspected and picked up by a local scrap dealer for recycling. Decontamination of the drip pad was also completed using the vacublast equipment.

Asbestos fabric removal was completed and a penetrating encapsulant was applied to the walls of the lumber drying building by a licensed asbestos subcontractor. The underground storage tanks were removed and disposal was completed in accordance with state requirements.

Excavation, off-site disposal of contaminated soils and debris, and backfilling with clean fill was completed on May 9, 1993. A total of 1,642 tons of soil and debris was disposed at the ESI hazardous waste disposal facility and 4,801 tons of contaminated soil and debris was disposed at the Finley Buttes special waste landfill in Oregon.

*C. Characterization of Risk*

Prior to cleanup, the preliminary environmental pathways of concern were potential direct contact with contaminated soil and debris and potential ingestion of contaminated ground water. The arsenic and chromium contamination in the Site soils were associated with an excess lifetime cancer risk of approximately $5 \times 10^{-3}$. The risk assessment estimated a Hazard Index value of 82 for noncancer health effects for the highly contaminated soil in the treatment building area. Cleanup standards for the Site were developed based on risk-based remedial action objectives in the ROD. EPA selected cleanup goals of 36 mg/kg arsenic for surface soil and 336 mg/kg arsenic for subsurface (greater than 2 ft. depth) soil. EPA selected the more stringent cleanup level for surface soil because this is where the greatest potential for human contact exists. It is also approximately equal to the $1 * 10^{-4}$ risk level assuming future residential scenarios and, although the current zoning is for industrial use, there are residents located near the Site. The ROD also established chromium and copper cleanup levels of 1,351 mg/kg and 10,000 mg/kg, respectively, associated with Hazard Index of 1.

The remedial action objectives for groundwater protection were to prevent migration of arsenic and chromium from soil resulting in groundwater concentrations above MCLs. The MCLs are 50 ug/l for arsenic and 100 ug/l for chromium. The soil cleanup meets the objectives for groundwater protection by removing the source of contamination.

Confirmatory soil sampling verifies that the Site has achieved the ROD cleanup objective, that arsenic has been removed to levels below 36 mg/kg for surface soil and 336 mg/kg for subsurface soil and that chromium and copper have been removed to levels below 1,351 mg/kg and 10,000 mg/kg, respectively for both surface and subsurface soil. The ROD required that the existing monitoring network of wells and springs be sampled semi-annually for a period of two years following completion of the remedial action. The primary purpose of the monitoring was to verify that the City's water supply has been adequately protected. The results from samples collected by EPA and DEQ since the cleanup was completed have shown that none of the monitoring well locations or springs have measured levels of metal concentrations above the MCLs for either total or dissolved metals. The ROD also provided that monitoring results be evaluated after two years to determine whether monitoring should be continued. DEQ completed the final round of groundwater and surface water sampling in 1996. EPA and DEQ subsequently determined that the groundwater and surface water monitoring required by the ROD has been completed and no further monitoring will be required.

All cleanup actions specified in the ROD have been implemented. Furthermore, EPA has removed all other contamination detected to acceptable risk levels. Confirmatory groundwater sampling and backfilling the Site with clean soil provide further assurance that the Site no longer poses any threats to human health or the environment. Removal of contaminated soil and debris has eliminated direct contact as a potential route of exposure and removed the source of ground-water contamination.

With the implementation and completion of all remedial activities, the Site no longer poses any threat to human health or the environment, insuring that no further action is required. With the exception of abandoning of monitoring wells, there are no other operation and maintenance activities to be performed at the Site.

The ROD required institutional controls such as deed restrictions, or use of an environmental notice to ensure appropriate consideration of Site conditions in future land use decisions. EPA reviewed a copy of the warranty deed to confirm that it includes the environmental notice, and provides for EPA and DEQ access for cleanup activities, including water sampling and testing, and monitor well abandonment. EPA believes that the institutional controls as stated in the ROD and as implemented are protective.

EPA conducted a five-year review of the Site in September, 1998. The review included a visual inspection of the Site and review of the institutional controls. EPA determined that the Site remains protective of human health and the environment.

*D. Public Participation*

EPA conducted meetings and interviews with local officials and other

members of the community in April 1990, and published the Community Relations Plan for the Site in June 1990. EPA also established a mailing list for distribution of fact sheets and other information updating Site activities. An information repository, which included the administrative record for the Site, was established at the Wallowa County Planning Department to make information about the Site available for public review. EPA attended Enterprise City Council meetings during the investigation and cleanup to provide updates on planning and construction activities.

A public comment period was held from August 17, 1992 to September 16, 1992 on EPA's proposed remedial action and other alternatives. No comments were received and no public hearings were requested.

A copy of the Deletion Docket can be reviewed by the public at the Wallowa County Planning Department, or the EPA Region 10 Superfund Records Center. The Deletion Docket includes this Notice, the Removal Action Memos, the ROD, Remedial Action Construction Report, and Final Site Close-Out Report. EPA Region 10 will also announce the availability of the Deletion Docket for public review in a local newspaper and informational fact sheet.

One of the three criteria for deletion specifies that EPA may delete a site from the NPL if ''all appropriate Fund-financed responses under CERCLA have been implemented, and no further action by responsible parties is appropriate.'' EPA, with the concurrence of ODEQ, believes that this criterion for deletion has been met. Soil and groundwater data from the Site confirm that the ROD cleanup goals have been achieved. There is no significant threat to human health or the environment and, therefore, no further remedial action is necessary.

Consequently, EPA is proposing deletion of this Site from the NPL. Documents supporting this action are available in the docket at the information repositories.

Dated: August 24, 1999.

**Charles E. Findley,**

*Acting Regional Administrator, Region 10.*

[FR Doc. 99–22632 Filed 8–30–99; 8:45 am]

BILLING CODE 6560–50–P

## ENVIRONMENTAL PROTECTION AGENCY

## 40 CFR Part 300

**[FRL–6430–9]**

## National Oil and Hazardous Substances Pollution Contingency Plan; National Priorities List

**AGENCY:** Environmental Protection Agency.

**ACTION:** Notice of intent to delete McCarty's/Pacific Hide and Fur Site from the National Priorities List; request for comments.

**SUMMARY:** The Environmental Protection Agency (EPA), Region 10, announces its intent to delete the McCarty's/Pacific Hide and Fur Site in Pocatello, Idaho from the National Priorities List (NPL) and requests public comment on this proposed action. The NPL constitutes appendix B of 40 CFR part 300 which is the National Oil and Hazardous Substances Pollution Contingency Plan (NCP) which EPA promulgated pursuant to section 105 of the Comprehensive Environmental Response, Compensation, and Liability Act (CERCLA) of 1980, as amended. EPA and the State of Idaho Division of Environmental Quality (IDEQ) have determined that the Site poses no significant threat to public health or the environment and, therefore, further remedial measures pursuant to CERCLA are not appropriate.

**DATES:** Comments concerning this Site may be submitted on or before September 30, 1999.

**ADDRESSES:** Comments may be mailed to Beverly Gaines, Environmental Protection Agency, 1200 Sixth Avenue, Mail Stop ECL–110, Seattle, Washington 98101.

Comprehensive information on this Site is available through the Region 10 public docket which is available for viewing at the McCarty's/Pacific Hide and Fur Site information repositories at the following locations:

Pocatello Public Library, 812 E. Clark Street, Pocatello, Idaho 83201; or

United States Environmental Protection Agency, Region 10 Office of Environmental Cleanup—Records Center, 1200 Sixth Avenue, Seattle, Washington 98101.

**FOR FURTHER INFORMATION CONTACT:** Beverly Gaines, U.S. EPA Region 10, 1200 Sixth Avenue, Mail Stop ECL–110, Seattle, Washington 98101, (206) 553–1066.

**SUPPLEMENTARY INFORMATION:**

### Table of Contents

I. Introduction
II. NPL Deletion Criteria
III. Deletion Procedures
IV. Basis of Intended Site Deletion

### I. Introduction

The Environmental Protection Agency (EPA), Region 10 announces its intent to delete a site from the National Priorities List (NPL), appendix B of the National Oil and Hazardous Substances Pollution Contingency Plan (NCP), 40 CFR part 300, and requests comments to this deletion. EPA identifies sites on the NPL that appear to present a significant risk to human health or the environment. As described in § 300.425(e)(3)of the NCP, sites deleted from the NPL remain eligible for Fund-financed remedial actions in the unlikely event that conditions at the site warrant such actions.

EPA plans to delete the McCarty's/Pacific Hide and Fur Site (''Site'') at 3575 Highway 30 West, Pocatello Idaho, 83201, from the NPL.

EPA will accept comments on the plan to delete this Site for thirty days after publication of this document in the **Federal Register**.

Section II of this document explains the criteria for deleting sites from the NPL. Section III discusses procedures that EPA is using for this action. Section IV discusses the McCarty's/Pacific Hide and Fur Site and explains how the Site meets deletion criteria.

### II. NPL Deletion Criteria

Section 300.425(e) of the NCP provides that ''releases'' (sites) may be deleted from, or recategorized on, the NPL where no further response is appropriate. In making a determination to delete a site from the NPL, EPA shall consider, in consultation with the state, whether any of the following criteria have been met:

(i) Responsible parties or other parties have implemented all appropriate response actions required;

(ii) All appropriate Fund-financed responses under CERCLA have been implemented, and no further action by responsible parties is appropriate, or

(iii) The remedial investigation has shown that the release poses no significant threat to public health or the environment and, therefore, taking of remedial measures is not appropriate.

Even if a site is deleted from the NPL, where hazardous substances, pollutants or contaminants remain at the site *above* levels that allow for unlimited use and unrestricted exposure, EPA's policy is that a subsequent review of the site will be conducted at least every five years after the initiation of the remedial action

at the site to ensure that the site remains protective of public health and the environment. In the case of the McCarty's/Pacific Hide and Fur Site, no hazardous substances were left onsite, making ''unlimited use and unrestricted exposure'' possible. Therefore, the five-year review requirement of section 121 (c) of SARA is not applicable. If, however, new information becomes available that indicates a need for further action, EPA may require remedial actions. Whenever there is a significant release from a site deleted from the NPL, the site may be restored to the NPL without the application of the Hazard Ranking System.

## III. Deletion Procedures

The following procedures were used for the intended deletion of this Site: (1) EPA Region 10 issued a final close out report documenting the achievement of cleanup goals; (2) the Idaho Division of Environmental Quality (IDEQ) concurred with the proposed deletion decision; (3) a notice has been published in the local newspaper and has been distributed to appropriate federal, state, and local officials and other interested parties announcing the commencement of a 30-day public comment period on EPA's Notice of Intent to Delete; and (4) all relevant documents have been made available for public review in the local Site information repository.

Deletion of the Site from the NPL does not itself, create, alter or revoke any individual rights or obligations. The NPL is designed primarily for information purposes to assist EPA management. As mentioned in section II of this document, 40 CFR 300.425(e)(3) states that deletion of a site from the NPL does not preclude eligibility for future Fund-financed response actions.

EPA's Regional Office will accept and evaluate public comments on EPA's Notice of Intent to Delete before making a final decision. The Agency will prepare a Responsiveness Summary if any significant public comments are received.

A deletion occurs when the Regional Administrator places a final notice in the **Federal Register**. Generally, the NPL will reflect deletions in the final update following the Notice. Public notices and copies of the Responsiveness Summary will be made available to local residents by EPA's Regional Office in Seattle, Washington.

## IV. Basis for Intended Site Deletion

The following Site summary provides the Agency's rationale for the intention to delete this Site from the NPL.

### *A. Site Background*

The McCarty's/Pacific Hide and Fur Site is located at 3575 Highway 30 West in the northwest part of Pocatello, Bannock County, Idaho. The Site is approximately 16.9 acres in size and is bounded on the north by State Highway 30 and on the south by the Union Pacific Railroad (UPRR) right-of-way. The Site is an aggregate of three contiguous properties, currently owned by UPRR and Pacific Hide and Fur. The McCarty's part comprised approximately 8.3 acres and included a former gravel pit approximately 20 feet deep and 3 acres in area. The Site is located in an area of mixed commercial and light industrial property.

### *B. History*

The Site was originally a small 3-acre gravel mining operation on the McCarty's property but prior to 1983 changed and expanded to a metal recycling operation on an adjacent parcel and along the railroad. The entire Site is currently used as part of the Pacific Steel Recycling business' metals storage and recycling operation.

Polychlorinated biphenyls (PCBs) were detected in the Site soil in 1983 and EPA conducted an Emergency Response Action that year to remove nearly 600 PCB-containing capacitors, about 30 cubic yards of contaminated soil, and 20 drums of miscellaneous hazardous wastes for off-site disposal. The Site was listed on the National Priorities List (NPL) on September 21, 1984, because of the PCB-containing articles and PCB contaminated soil.

Several remedial actions were conducted on the Site between 1983 and 1988 when the first EPA Record of Decision (ROD) was signed on June 28, 1988. The first ROD identified PCB-contaminated soil as an unacceptable risk to human health. Solidification and stabilization were the preferred cleanup remedies identified in the ROD. Additional investigative sampling in 1990 and 1991 lead to the first ROD being amended on April 22, 1992, dividing the Site into two Operable Units (OUs); the first OU addressing the PCB-contaminated and commingled lead-contaminated soil, and a second OU, the Final Operable Unit dealing with the remaining lead-contaminated soil. Over 15,000 tons of contaminated soil and scrap were disposed in 1992 during implementation of the first OU. The first ROD for OU1 was amended to include lead contamination of soil; the remedy was changed from solidification and stabilization to excavation and disposal off-site of PCB and commingled lead-contaminated soil.

In 1993, a Remedial Investigation and Feasibility Study (RIFS) for the Final OU (the remaining lead-contaminated soil) was conducted. The RIFS evaluated all of the data collected from the Site and the findings were incorporated into the Final OU ROD, signed on September 27, 1995.

Site cleanup objectives were to remediate the PCB- and lead-contaminated soil to meet or surpass the health-based cleanup levels for future industrial land use. The cleanup levels identified in the RODs were 25 ppm for PCB and 1000 ppm for lead. The RODs objectives were met by: (1) Removal of the hazardous materials, i.e., PCB capacitors, asbestos, battery casings, etc.; (2) removal and recycling of scrap materials that were stockpiled within areas of the Site requiring remediation; (3) excavation of soil with PCB or lead concentrations greater than the cleanup goals and treatment of the soil exceeding the RCRA-characteristic level for lead, such that the treated materials were acceptable for disposal as a non-hazardous waste; (4) disposal of excavated soil in an approved, off-site disposal facility; and (5) backfilling of excavated areas with clean soil from off-site and/or regrading of disturbed areas of the Site to the extent necessary to promote positive surface drainage and site stability and to avoid erosion problems. Solidification and stabilization of lead contaminated soils were incorporated in the soil treatment to allow disposal at a local landfill.

The PRPs requested a more comprehensive cleanup than was required by the RODs, with the intent of reducing soil contamination to levels below those which would pose any risk to human health or the environment, which is referred to as residential cleanup criteria. On April 20, 1998, EPA signed an Explanation of Significant Differences (ESD) to the Final Operable Unit ROD changing the cleanup level for lead levels in the soil from 1000 ppm (industrial use criteria) to 400 ppm (the health-based residential use criteria) and lowered the PCB cleanup level from 25 ppm to 1 ppm to meet the same criteria. The Site was cleaned up to these lower levels by excavating and removing contaminated soil above the revised cleanup levels, thereby allowing unrestricted use of the property. Based on post cleanup sampling, no hazardous wastes above health-based levels remain on-site.

### *C. Characterization of Risk*

Prior to cleanup, the preliminary environmental pathways of concern were potential direct contact and ingestion of PCB- and lead-

contaminated soil and potential ingestion of contaminated ground water. Initially, it was not known if the groundwater had been contaminated by activities at the Site.

Remedial action began in 1983, when EPA conducted an Emergency Response Action which included the installation of ten groundwater monitoring wells to determine if Site contamination had impacted the groundwater. No groundwater contamination was identified. Further remedial actions removed approximately 37,000 tons of contaminated soil of which over 10,000 tons required treatment prior to disposal.

The initial ROD cleanup levels required removal of contaminants down to industrial use criteria which allows for hazardous materials to remain on-Site. The ESD, signed in 1998, lowered the cleanup levels to require compliance with residential health-based criteria.

With the implementation and completion of all remedial activities, the Site no longer poses any threat to human health or the environment, ensuring that no further action is required. Site monitoring wells and a domestic well have been abandoned, and, at this time, there are no other operation and maintenance activities to be performed at the Site. EPA required institutional controls are unnecessary because no hazardous substances were left on-Site above levels that allow for unlimited use and unrestricted exposure. The five-year review requirement of section 121 (c) of SARA is not applicable.

*D. Public Participation*

Community input has been sought by EPA Region 10 throughout the cleanup process at the Site. Information repositories were established at the Pocatello Public Library and the EPA Region 10 office. Community concern about the Site has generally been limited. Community relations activities have included several public meetings, fact sheets, and newspaper notice of the two proposed plans. A limited number of comments were received on the proposed plans for the Site. EPA's response to these comments can be found in the Responsiveness Summaries of the RODs.

A copy of the Deletion Docket can be reviewed by the public at the Pocatello Public Library, or the EPA Region 10 Superfund Records Center. The Deletion Docket includes this document, the RODs, Amended ROD, Remedial Action Construction Report, and Final Site Close-Out Report. EPA Region 10 will also announce the availability of the Deletion Docket for public review in a local newspaper and informational fact sheet.

One of the three criteria for deletion specifies that EPA may delete a site from the NPL if ''responsible parties or other persons have implemented all appropriate response actions required.'' EPA, with the concurrence of IDEQ, believes that this criterion for deletion has been met. Groundwater and soil data from the Site confirm that the ROD cleanup goals have been achieved. There is no significant threat to human health or the environment and, therefore, no further remedial action is necessary. Consequently, EPA is proposing deletion of this Site from the NPL. Documents supporting this action are available in the docket at the information repositories.

Dated: August 24, 1999.

**Charles E. Findley,**

*Acting Regional Administrator, Region 10.*

[FR Doc. 99–22630 Filed 8–30–99; 8:45 am]

BILLING CODE 6560–50–P

## FEDERAL COMMUNICATIONS COMMISSION

## 47 CFR Part 73

**[DA 99–1676, MM Docket No. 99–271, RM–9696]**

## Radio Broadcasting Services; Boulder City, NV, Bullhead City, Lake Havasu City, Kingman, AZ, Ludlow, CA

**AGENCY:** Federal Communications Commission.

**ACTION:** Proposed rule.

**SUMMARY:** The Commission requests comments on a petition filed by Centennial Broadcasting Licensee, LLC (''petitioner''), licensee of Station KSTJ, Boulder City, Nevada, requesting the substitution of Channel 274C for Channel 288C2 at Boulder City and the modification of Station KSTJ's license to specify operation on the higher powered channel. To accommodate the allotment at Boulder City, petitioner requests the following channel substitutions and license modifications: (1) substitute Channel 289C for Channel 274C at Bullhead City, Arizona, and modify the license of Station KFLG; (2) substitute Channel 272C2 for Channel 224C2 at Lake Havasu City, Arizona, and modify the license of Station KJJJ; (3) substitute Channel 224C1 for Channel 290C1 at Kingman, Arizona, and modify the license of Station KRCY; and (4) substitute Channel 273A for Channel 289A at Ludlow, California, and modify the license of Station KDUQ. We also propose to editorially amend Section 73.202(b) to reflect the deletion of Channel 286C2 at Kingman, AZ, pursuant to the *Report and Order* in MM Docket 90–468, 56 FR 43884, September 5, 1991.

**DATES:** Comments must be filed on or before October 12, 1999, and reply comments on or before October 27, 1999.

**ADDRESSES:** Federal Communications Commission, 445 12th Street, S.W., Room TW–A325, Washington, DC 20554. In addition to filing comments with the FCC, interested parties should serve the petitioner, or its counsel or consultant, as follows: John S. Logan, M. Anne Swanson, Dow, Lohnes & Albertson, PLLC, 1200 New Hampshire Avenue, N.W., Suite 800, Washington, D.C. 20036 (Counsel to petitioner).

**FOR FURTHER INFORMATION CONTACT:** Leslie K. Shapiro, Mass Media Bureau, (202) 418–2180.

**SUPPLEMENTARY INFORMATION:** Channel 274C can be allotted to Boulder City in compliance with the Commission's minimum distance separation requirements at Station KSTJ's presently licensed transmitter site, at coordinates 35–59–45 NL; 114–51–51 WL. Channel 289C can be allotted to Bullhead City at Station KFLG's licensed transmitter site, at coordinates 35–14–56 NL; 114–44–37 WL. Channel 272C2 can be allotted to Lake Havasu City at Station KJJJ's licensed transmitter site, at coordinates 34–33–06 NL; 114–11–37 WL. Channel 224C1 can be allotted to Kingman at Station KRCY's licensed transmitter site, at coordinates 35–01–58 NL; 114–21–57 WL. Channel 273A can be allotted to Ludlow at Station KDUQ's licensed transmitter site, at coordinates 34–43–21 NL; 116–10–04. This is a synopsis of the Commission's Notice of Proposed Rule Making and Orders to Show Cause, MM Docket No. 99–271, adopted August 11, 1999, and released August 20, 1999. The full text of this Commission decision is available for inspection and copying during normal business hours in the FCC Reference Center, 445 12th Street, SW, Washington, DC. The complete text of this decision may also be purchased from the Commission's copy contractor, International Transcription Services, Inc., (202) 857–3800, 1231 20th Street, NW, Washington, DC 20036.

Provisions of the Regulatory Flexibility Act of 1980 do not apply to this proceeding.

Members of the public should note that from the time a Notice of Proposed Rule Making is issued until the matter is no longer subject to Commission consideration or court review, all *ex parte* contacts are prohibited in Commission proceedings, such as this

one, which involve channel allotments. See 47 CFR 1.1204(b) for rules governing permissible *ex parte* contacts.

For information regarding proper filing procedures for comments, see 47 CFR 1.415 and 1.420.

Federal Communications Commission.

**John A. Karousos,**

*Chief, Allocations Branch, Policy and Rules Division, Mass Media Bureau.*

[FR Doc. 99–22504 Filed 8–30–99; 8:45 am]

BILLING CODE 6712–01–P

---

## FEDERAL COMMUNICATIONS COMMISSION

## 47 CFR Part 73

**[DA 99–1675, MM Docket No. 99–270, RM–9703]**

## Radio Broadcasting Services; Taos, NM

**AGENCY:** Federal Communications Commission.

**ACTION:** Proposed rule.

**SUMMARY:** The Commission requests comments on a petition filed by Darren Cordova seeking the allotment of Channel 240A to Taos, NM, as the community's third local FM service. Channel 240A can be allotted to Taos in compliance with the Commission's minimum distance separation requirements with a site restriction of 9.7 kilometers (6.0 miles) southeast, at coordinates 36–21–48 NL; 105–28–51 WL, to avoid a short-spacing to the proposed allotment of Channel 240A at Chama, NM. *See* MM Docket 99–116, 64 FR 23036, April 29, 1999.

**DATES:** Comments must be filed on or before October 12, 1999, and reply comments on or before October 27, 1999.

**ADDRESSES:** Federal Communications Commission, 445 12th Street, S.W., Room TW–A325, Washington, DC 20554. In addition to filing comments with the FCC, interested parties should serve the petitioner, or its counsel or consultant, as follows: James R. Bayes, Todd M. Stansbury, Wiley, Rein & Fielding, 1776 K Street, N.W., Washington, DC 20006 (Counsel to petitioner).

**FOR FURTHER INFORMATION CONTACT:** Leslie K. Shapiro, Mass Media Bureau, (202) 418–2180.

**SUPPLEMENTARY INFORMATION:** This is a synopsis of the Commission's Notice of Proposed Rule Making, MM Docket No. 99–270, adopted August 11, 1999, and released August 20, 1999. The full text of this Commission decision is available for inspection and copying during normal business hours in the FCC Reference Center, 445 12th Street, SW, Washington, DC. The complete text of this decision may also be purchased from the Commission's copy contractor, International Transcription Services, Inc., (202) 857–3800, 1231 20th Street, NW, Washington, DC 20036.

Provisions of the Regulatory Flexibility Act of 1980 do not apply to this proceeding.

Members of the public should note that from the time a Notice of Proposed Rule Making is issued until the matter is no longer subject to Commission consideration or court review, all *ex parte* contacts are prohibited in Commission proceedings, such as this one, which involve channel allotments. See 47 CFR 1.1204(b) for rules governing permissible *ex parte* contacts.

For information regarding proper filing procedures for comments, see 47 CFR 1.415 and 1.420.

Federal Communications Commission.

**John A. Karousos,**

*Chief, Allocations Branch, Policy and Rules Division, Mass Media Bureau.*

[FR Doc. 99–22503 Filed 8–30–99; 8:45 am]

BILLING CODE 6712–01–P

# Notices

Federal Register

Vol. 64, No. 168

Tuesday, August 31, 1999

This section of the FEDERAL REGISTER contains documents other than rules or proposed rules that are applicable to the public. Notices of hearings and investigations, committee meetings, agency decisions and rulings, delegations of authority, filing of petitions and applications and agency statements of organization and functions are examples of documents appearing in this section.

## DEPARTMENT OF AGRICULTURE

### Deschutes Provincial Interagency Executive Committee (PIEC), Advisory Committee

**AGENCY:** Forest Service, USDA.

**ACTION:** Notice of meeting.

**SUMMARY:** The Deschutes PIEC Advisory Committee will meet on September 21 and 22, 1999, at the Prineville/BLM conference room at 3160 E. 3rd in Prineville, Oregon. The first day will be a field trip to the Prineville District to receive training in the proper functioning condition of riparian ecosystems and then review how the BLM Standards for Rangeland Management and Guidelines for Livestock Grazing are being implemented. The second day will be a business meeting which will begin at 9:00 a.m. and finish at 4:00 p.m. Agenda items include a briefing on the status of the Interior Columbia Basin Ecosystem Management Project Supplemental Draft Environmental Impact Statement, finalize the Hosmer Lake Working Group Recommendations, an update on Survey and Manage species, and the upcoming Interagency Advisory Committee/Provincial Advisory Committee summit. A public forum will start at 3:30 p.m. All Deschutes Province Advisory Committee Meetings are open to the public.

**FOR FURTHER INFORMATION CONTACT:** Mollie Chaudet, Province Liaison, USDA, Bend-Ft. Rock Ranger District, 1230 NE 3rd., Bend, OR, 97701, phone (541) 383–4769.

Dated: August 23, 1999.

**Sally Collins,**

*Forest Supervisor.*

[FR Doc. 99–22524 Filed 8–30–99; 8:45 am]

BILLING CODE 3410–11–M

## COMMITTEE FOR THE IMPLEMENTATION OF TEXTILE AGREEMENTS

### Adjustment of Import Limits for Certain Cotton, Wool and Man-Made Fiber Textiles and Textile Products and Silk Blend and Other Vegetable Fiber Apparel Produced or Manufactured in the Philippines; Republication

**Editorial Note:** FR Doc. 99–21478 was originally published Thursday, August 19, 1999 at 64 FR 45239–45240, however, due to coding errors it is being republished in its entirety.

August 12, 1999.

**AGENCY:** Committee for the Implementation of Textile Agreements (CITA).

**ACTION:** Issuing a directive to the Commissioner of Customs adjusting limits.

**EFFECTIVE DATE:** August 19, 1999.

**FOR FURTHER INFORMATION CONTACT:** Janet Heinzen, International Trade Specialist, Office of Textiles and Apparel, U.S. Department of Commerce, (202) 482–4212. For information on the quota status of these limits, refer to the Quota Status Reports posted on the bulletin boards of each Customs port, call (202) 927–5850, or refer to the U.S. Customs website at http://www.customs.ustreas.gov. For information on embargoes and quota re-openings, call (202) 482–3715.

**SUPPLEMENTARY INFORMATION:**

**Authority:** Section 204 of the Agricultural Act of 1956, as amended (7 U.S.C. 1854); Executive Order 11651 of March 3, 1972, as amended.

The current limits for certain categories are being adjusted for special shift.

A description of the textile and apparel categories in terms of HTS numbers is available in the CORRELATION: Textile and Apparel Categories with the Harmonized Tariff Schedule of the United States (see **Federal Register** notice 63 FR 71096, published on December 23, 1998). Also see 63 FR 67050, published on December 4, 1998.

**Troy H. Cribb,**

*Chairman, Committee for the Implementation of Textile Agreements.*

**Committee for the Implementation of Textile Agreements**

August 12, 1999.

Commissioner of Customs,
*Department of the Treasury, Washington, DC 20229.*

Dear Commissioner: This directive amends, but does not cancel, the directive issued to you on November 30, 1998, by the Chairman, Committee for the Implementation of Textile Agreements. That directive concerns imports of certain cotton, wool and man–made fiber textiles and textile products and silk blend and other vegetable fiber apparel, produced or manufactured in the Philippines and exported during the twelve-month period which began on January 1, 1999 and extends through December 31, 1999.

Effective on August 19, 1999, you are directed to adjust the limits for the following categories, as provided for under the Uruguay Round Agreement on Textiles and Clothing:

| Category | Adjusted twelve-month limit [1] |
|---|---|
| Levels in Group I | |
| 352/652 | 2,212,828 dozen. |
| 369–S [2] | 9,917 kilograms. |
| 611 | 5,201,529 square meters. |
| 633 | 56,384 dozen. |
| 636 | 1,910,481 dozen. |
| 643 | 606,355 numbers. |
| 645/646 | 736,831 dozen. |
| 649 | 5,714,665 dozen. |
| 659–H [3] | 1,659,613 kilograms. |
| 847 | 330,211 dozen. |
| Group II | |
| 200–227, 300–326, 332, 359–O [4], 360, 362, 363, 369–O [5], 400–414, 434–438, 440, 442, 444, 448, 459pt. [6], 464, 469pt. [7], 600–607, 613–629, 644, 659–O [8], 666, 669–O [9], 670–O [10], 831, 833–838, 840–846, 850–858 and 859pt. [11], as a group. | 239,200,611 square meters equivalent. |

[1] The limits have not been adjusted to account for any imports exported after December 31, 1998.

[2] Category 369–S: only HTS number 6307.10.2005.

[3] Category 659–H: only HTS numbers 6502.00.9030, 6504.00.9015, 6504.00.9060, 6505.90.5090, 6505.90.6090, 6505.90.7090 and 6505.90.8090.

[4] Category 359–O: all HTS numbers except 6103.42.2025, 6103.49.8034, 6104.62.1020, 6104.69.8010, 6114.20.0048, 6114.20.0052, 6203.42.2010, 6203.42.2090, 6204.62.2010, 6211.32.0010, 6211.32.0025, 6211.42.0010 (Category 359–C); and 6406.99.1550 (Category 359pt.).

[5] Category 369–O: all HTS numbers except 6307.10.2005 (Category 369–S); 5601.10.1000, 5601.21.0090, 5701.90.1020, 5701.90.2020, 5702.10.9020, 5702.39.2010, 5702.49.1020, 5702.49.1080, 5702.59.1000, 5702.99.1010, 5702.99.1090, 5705.00.2020 and 6406.10.7700 (Category 369pt.).

[6] Category 459pt.: all HTS numbers except 6405.20.6030, 6405.20.6060, 6405.20.6090, 6406.99.1505 and 6406.99.1560.

[7] Category 469pt.: all HTS numbers except 5601.29.0020, 5603.94.1010 and 6406.10.9020.

[8] Category 659–O: all HTS numbers except 6103.23.0055, 6103.43.2020, 6103.43.2025, 6103.49.2000, 6103.49.8038, 6104.63.1020, 6104.63.1030, 6104.69.1000, 6104.69.8014, 6114.30.3044, 6114.30.3054, 6203.43.2010, 6203.43.2090, 6203.49.1010, 6203.49.1090, 6204.63.1510, 6204.69.1010, 6210.10.9010, 6211.33.0010, 6211.33.0017, 6211.43.0010 (Category 659–C); 6502.00.9030, 6504.00.9015, 6504.00.9060, 6505.90.5090, 6505.90.6090, 6505.90.7090, 6505.90.8090 (Category 659–H); 6406.99.1510 and 6406.99.1540 (Category 659pt.).

[9] Category 669–O: all HTS numbers except 6305.32.0010, 6305.32.0020, 6305.33.0010, 6305.33.0020, 6305.39.0000 (Category 669–P); 5601.10.2000, 5601.22.0090, 5607.49.3000, 5607.50.4000 and 6406.10.9040 (Category 669pt.).

[10] Category 670–O: all HTS numbers except 4202.12.8030, 4202.12.8070, 4202.92.3020, 4202.92.3031, 4202.92.9026 and 6307.90.9907 (Category 670–L).

[11] Category 859pt.: only HTS numbers 6115.19.8040, 6117.10.6020, 6212.10.5030, 6212.10.9040, 6212.20.0030, 6212.30.0030, 6212.90.0090, 6214.10.2000 and 6214.90.0090.

The Committee for the Implementation of Textile Agreements has determined that these actions fall within the foreign affairs exception to the rulemaking provisions of 5 U.S.C. 553(a)(1).

Sincerely,

Troy H. Cribb,

*Chairman, Committee for the Implementation of Textile Agreements.*

**Editorial Note:** FR Doc. 99–21478 was originally published Thursday, August 19, 1999 at 64 FR 45239–45240, however, due to coding errors it is being republished in its entirety.

[FR Doc.99–21478 Filed 8–18–99; 8:45 am]

BILLING CODE 1505–01–F

## CORPORATION FOR NATIONAL AND COMMUNITY SERVICE

### Information Collection; Submission for OMB Review; Comment Request

**AGENCY:** Corporation for National and Community Service.

**ACTION:** Notice.

The Corporation for National and Community Service (hereinafter the ''Corporation''), has submitted the following public information collection requests (ICRs) to the Office of Management and Budget (OMB) for review and approval in accordance with the Paperwork Reduction Act of 1995 (Pub. L. 104–13, (44 U.S.C. Chapter 35). Copies of these individual ICRs, with applicable supporting documentation, may be obtained by calling the Corporation for National and Community Service, Office of Evaluation, Chuck Helfer, (202) 606–5000, Extension 248. Individuals who use a telecommunications device for the deaf (TTY/TDD) may call (202) 606–5256 between the hours of 9:00 a.m. and 4:30 p.m. Eastern time, Monday through Friday.

Comments should be sent to the Office of Information and Regulatory Affairs, Attn: Mr. Danny Werfel, OMB Desk Officer for the Corporation for National and Community Service, Office of Management and Budget, Room 10235, Washington, DC, 20503, (202) 395–7316, within 30 days from the date of this publication in the **Federal Register**.

The OMB is particularly interested in comments which:

- Evaluate whether the proposed collection of information is necessary for the proper performance of the functions of the Corporation, including whether the information will have practical utility;
- Evaluate the accuracy of the agency's estimate of the burden of the proposed collection of information, including the validity of the methodology and assumptions used;
- Propose ways to enhance the quality, utility and clarity of the information to be collected; and
- Propose ways to minimize the burden of the collection of information to those who are to respond, including through the use of appropriate automated, electronic, mechanical, or other technological collection techniques or other forms of information technology, e.g. permitting electronic submissions of responses.

*Type of Review:* New.

*Agency:* Corporation for National and Community Service.

*Title:* Outcome Evaluation of Literacy and Tutoring Programs.

*OMB Number:* None.

*Agency Number:* None.

*Affected Public:* Public school students in grades 1–3; Public school teachers in grades 1–3; Public school principals; Corporation members (the tutors).

*Total Respondents:* Approximately 1755 students; Approximately 500 teachers; Approximately 100 principals; Approximately 500 Corporation members (tutors).

*Frequency:* Two waves of data collection for students and teachers; Three for tutors; One for Principals.

*Average Time Per Response:* Students—40 minutes (reading test); Teachers—25 minutes per student (SSRS); 30 minutes (school climate); 15 minutes (program implementation); Principals—30 minutes (school climate); Tutors—10 minutes per student.

*Estimated Total Burden Hours:* 5,130 hours.

*Total Burden Cost (capital/startup):* None.

*Total Burden Cost (operating/maintenance):* None.

*Description:* The Corporation seeks approval to conduct an outcome evaluation of the literacy and tutoring programs that it supports through grants. The study will provide estimates of the impact on students' (in grades 1–3) reading proficiencies and other outcomes as a result of their participation in the literacy and tutoring programs.

The national study will provide important information to the Corporation in the form of generalizations about overall program effects on students' reading skills and other school-related behaviors, as well as information about relationships between program characteristics and student outcomes. The study will also provide nationally representative estimates of student impact from participation in 'high-quality' literacy programs. This will be based on information about the programs' implementation activities and current state of knowledge of effective tutoring practices. This will help to ensure that it is the tutoring models being evaluated rather than level of implementation of the model.

The burden estimates are somewhat higher than originally projected in the 60-day notice. There are 500 teachers instead of 200, 100 principals instead of none, and the teacher time has increased. This is due to several factors. First, in order to obtain national estimates that can attribute change to the tutoring programs, comparisons using a self-norming technique have been substituted for three local evaluations. Second, in order to learn more about school climate principals will be surveyed. In addition, the time necessary to obtain useful information from teachers was reassessed.

Dated: August 25, 1999.

**Thomas L. Bryant,**

*Associate General Counsel.*

[FR Doc. 99–22509 Filed 8–30–99; 8:45 am]

BILLING CODE 6050–28–P

## DEPARTMENT OF DEFENSE

### Office of the Secretary

### Proposed Collection; Comment Request

**AGENCY:** Department of Defense, Office of the Under Secretary of Defense (Acquisition and Technology)/Office of the Assistant Deputy Under Secretary of Defense (Environmental Cleanup).

**ACTION:** Notice.

In compliance with Section 3506(c)(2)(A) of the Paperwork Reduction Act of 1995, the Office of the Assistant Deputy Under Secretary of Defense (Environmental Cleanup) announces the proposed extension of a public information collection and seeks public comment on the provisions thereof. Comments are invited on (a) whether the proposed collection of information is necessary for the proper performance of the functions of the agency, including whether the information shall have practical utility; (b) the accuracy of the agency's estimate of the burden of the proposed information collection; (c) ways to enhance the quality, utility, and clarity of the information to be collected; and (d) ways to minimize the burden of the information collection on respondents, including through the use of automated collection techniques or other forms of information technology.

**DATES:** Consideration will be given to all comments received by November 1, 1999.

**ADDRESSES:** Written comments and recommendations on the proposed information collection should be sent to the Office of the Assistant Deputy Under Secretary of Defense (Environmental Cleanup), Attention: Ms. Mary Raguso, 3400 Defense Pentagon, Washington, 20301–3400.

**FOR FURTHER INFORMATION CONTACT:** To request further information on this proposed information collection or to obtain a copy of the proposal and associated collection instruments, please write to the above address, or call Ms. Mary Raguso, Office of the Assistant Deputy Under Secretary of Defense (Environmental Cleanup), (703) 697–9106.

*Title, Associated form, and OMB Number:* Technical Assistance for Public Participation (TAPP) Application, DD Form 2749, OMB Control Number 0704–0392.

*Needs and Uses:* The collection of information is necessary to identify products or services requested by community members of restoration advisory boards or technical review committees to aid in their participation in the Department of Defense's environmental restoration program, and to meet Congressional reporting requirements.

*Affected Public:* Not-for-Profit Institutions.

*Annual Burden Hours:* 1,060.

*Number of Respondents:* 265.

*Responses to Respondent:* 1.

*Average Burden per Response:* 4 Hour.

*Frequency:* On occasion.

**SUPPLEMENTARY INFORMATION:**

#### Summany of Information Collection

Respondents are community members of restoration advisory boards or technical review committees requesting technical assistance to interpret scientific and engineering issues regarding the nature of environmental hazards at an installation. This assistance will assist communities in participating in the cleanup process. The information, directed by 10 U.S.C. 2705, will be used to determine the eligibility of the proposed project, begin the procurement process to obtain the requested products or services, and determine the satisfaction of community members of restoration advisory boards and technical review committees receiving the products and services.

Dated: August 24, 1999.

**Patricia L. Toppings,**

*Alternate OSD Federal Register Liaison Officer, Department of Defense.*

[FR Doc. 99–22565 Filed 8–30–99; 8:45 am]

BILLING CODE 5001–10–M

## DEPARTMENT OF DEFENSE

### Office of the Secretary

### TRICARE Formerly Known as the Civilian Health and Medical Program of the Uniformed Services (CHAMPUS); Fiscal Year 2000 Mental Health Rate Updates

**AGENCY:** Office of the Secretary, DoD.

**ACTION:** Notice of updated mental health per diem rates.

**SUMMARY:** This notice provides for the updating of hospital-specific per diem rates for high volume providers and regional per diem rates for low volume providers; the updated cap per diem for high volume providers; the beneficiary per diem cost-share amount for low volume providers for FY 2000 under the TRICARE Mental Health Per Diem Payment System; and the updated per diem rates for both full-day and half-day TRICARE Partial Hospitalization Programs for fiscal year 2000. It also corrects partial hospitalization per diem rates for fiscal year 1999 that were published September 28, 1998.

**EFFECTIVE DATE:** The fiscal year 2000 rates contained in this notice are effective for services occurring on or after October 1, 1999.

**FOR FURTHER INFORMATION CONTACT:** Stan Regensberg, Office of Medical Benefits and Reimbursement Systems, TRICARE Management Activity, telephone (303) 676–3742.

**SUPPLEMENTARY INFORMATION:** The final rule published in the **Federal Register** on September 6, 1988, (53 FR 34285) set forth reimbursement changes that were effective for all inpatient hospital admissions in psychiatric hospitals and exempt psychiatric units occurring on or after January 1, 1989. The final rule published in the **Federal Register** on July 1, 1993, (58 FR 35–400) set forth maximum per diem rates for all partial hospitalization admissions on or after September 29, 1993. Included in these final rules were provisions for updating reimbursement rates for each federal fiscal year. As stated in the final rules, each per diem shall be updated by the Medicare update factor for hospitals and units exempt from the Medicare Prospective Payment System. For fiscal year 2000, Medicare has recommended a rate of increase of 2.9 percent for hospitals and units excluded from the prospective payment system. TRICARE will adopt this update factor for FY 2000 as the final update factor. Hospitals and units with hospital-specific rates (hospitals and units with high TRICARE volume) and regional specific rates for psychiatric hospitals and units with low TRICARE volume will have their TRICARE rates for FY 2000 updated by 2.9 percent for FY 2000. Partial hospitalization rates for full day and half day programs will also be updated by 2.9 percent for FY 2000. The cap amount for high volume hospitals and units will also be updated by the 2.9 percent for FY 2000. The beneficiary cost-share of low volume hospitals and units will also be updated by the 2.9 percent for FY 2000. Consistent with Medicare, the wage portion of the regional rate subject to the area wage adjustment will remain at 71.1 percent for FY 2000.

The following reflect an update of 2.9 percent.

REGIONAL SPECIFIC RATES FOR PSYCHIATRIC HOSPITALS AND UNITS WITH LOW TRICARE VOLUME

| United States census region | Rate@ |
|---|---|
| Northeast: | |
| New England | $542 |
| Mid-Atlantic | 519 |
| Midwest: | |
| East North Central | 449 |
| West North Central | 424 |
| South: | |
| South Atlantic | 536 |

REGIONAL SPECIFIC RATES FOR PSYCHIATRIC HOSPITALS AND UNITS WITH LOW TRICARE VOLUME—Continued

| United States census region | Rate@ |
|---|---|
| East South Central | 579 |
| West South Central | 488 |
| West: | |
| Mountain | 487 |
| Pacific | 574 |

@ Wage portion of the rate, subject to the area wage adjustment—71.1 percent

Beneficiary Cost-Share: Beneficiary cost-share (other than dependents of active duty members) for care paid on the basis of a regional per diem rate is the lower of $144 per day or 25 percent of the hospital billed charges effective for services rendered on or after October 1, 1999.

Cap Amount: Updated cap amount for hospitals and units with high TRICARE volume is $679 per day for FY 2000.

The following reflect an update of 2.9 percent for FY 2000.

PARTIAL HOSPITALIZATION RATES FOR FULL-DAY AND HALF-DAY PROGRAMS FY 2000

| United States census region | Full-day rate (6 hours or more) | Half-day rate (3–5 hours) |
|---|---|---|
| Northeast: | | |
| New England (ME, NH, VT, MA, RI, CT) | $218 | $164 |
| Mid-Atlantic (NY, NJ, PA) | 234 | 176 |
| Midwest: | | |
| East North Central (OH, IN, IL, MI, WI) | 206 | 155 |
| West North Central (MN, IA, MO, ND, SD, NE, KS) | 206 | 155 |
| South: | | |
| South Atlantic (DE, MD, DC, VA, WV, NC, SC, GA, FL) | 223 | 167 |
| East South Central (KY, TN, AL, MS) | 241 | 181 |
| West South Central (AR, LA, TX, OK) | 241 | 181 |
| West: | | |
| Mountain (MT, ID, WY, CO, NM, AZ, UT, NV) | 244 | 183 |
| Pacific (WA, OR, CA, AK, HI) | 238 | 179 |

The following reflect a correction to the partial hospitalization rates for FY 1999.

PARTIAL HOSPITALIZATION RATES FOR FULL-DAY AND HALF-DAY PROGRAMS FY 1999

| United States census region | Full-day rate (6 hours or more) | Half-day rate (3–5 hours) |
|---|---|---|
| Northeast: | | |
| New England (ME, NH, VT, MA, RI, CT) | $212 | $159 |
| Mid-Atlantic (NY, NJ, PA) | 227 | 170 |
| Midwest: | | |
| East North Central (OH, IN, IL, MI, WI) | 200 | 150 |
| West North Central (MN, IA, MO, ND, SD, NE, KS) | 200 | 150 |
| South: | | |
| South Atlantic (DE, MD, DC, VA, WV, NC, SC, GA, FL) | 217 | 163 |
| East South Central (KY, TN, AL, MS) | 234 | 176 |
| West south Central (AR, LA, TX, OK) | 234 | 176 |
| West: | | |
| Mountain (MT, ID, WY, CO, NM, AZ, UT, NV) | 237 | 178 |
| Pacific (WA, OR, CA, AK, HI) | 231 | 173 |

These partial hospitalization rates are the new calculated rates that reflect the 2.4 percent increase for FY 1999. The FY 2000, 2.9 percent increase, effective October 1, 1999, is applied to these new calculated rates.

Dated: August 25, 1999.

**L.M. Bynum,**

*Alternate OSD Federal Register Liaison Officer, Department of Defense.*

[FR Doc. 99–22567 Filed 8–30–99; 8:45 am]

BILLING CODE 5001–10–M

## DEPARTMENT OF DEFENSE

### Office of the Secretary

### Defense Intelligence Agency, Science and Technology Advisory Board Closed Panel Meeting

**AGENCY:** Department of Defense, Defense Intelligence Agency.

**ACTION:** Notice.

**SUMMARY:** Pursuant to the provisions of Subsection (d) of Section 10 of Public Law 92–463, as amended by Section 5 of Public Law 94–409, notice is hereby given that a closed meeting of the DIA Science and Technology Advisory Board has been scheduled as follows:

**DATES:** September 1999 (800 a.m. to 1600 p.m.).

**ADDRESSES:** The Defense Intelligence Agency, 200 MacDill Blvd, Washington, D.C. 20340.

**FOR FURTHER INFORMATION CONTACT:** Maj Donald R. Culp, Jr., USAF, Executive Secretary, DIA Science and Technology Advisory Board, Washington, D.C. 20340–1328 (202) 231–4930.

**SUPPLEMENTARY INFORMATION:** The entire meeting is devoted to the discussion of classified information as defined in Section 552b(c)(l), Title 5 of the U.S. Code, and therefore will be closed to the public. The Board will receive briefings on and discuss several current critical intelligence issues and advise the Director, DIA, on related scientific and technical matters.

**L.M. Bynum,**

*Alternate OSD Federal Register, Liaison Officer, Department of Defense.*

[FR Doc. 99–22568 Filed 8–30–99; 8:45 am]

BILLING CODE 5001–10–M

## DEPARTMENT OF DEFENSE

### Office of the Secretary

**AGENCY:** Special Presidential Panel on Military Operations on Vieques.

**ACTION:** Notice.

**SUMMARY:** The Panel will meet in closed session on August 27, 1999. The Panel was chartered by the Secretary of Defense on 25 June 1999 to provide advice and recommendations to him regarding the need for the continuation of military operations on the island Vieques, Puerto Rico and the extent to which alternative sites or methods are available that would fulfill national security requirements. The Panel will meet in closed session on August 27, 1999 to discuss classified national security information related to Vieques.

In accordance with Section 10(d) of the Federal Advisory Committee Act, Public Law 92–463, as amended [5 U.S.C., Appendix II, (1982)], matters affecting national security, as covered by 5 U.S.C. 552 b(c)(1)(1988), will be discussed throughout the meeting, and accordingly, the meeting will be closed to the public. Because of the short timeframe of the panel's review, and the accelerated pace of the meting schedule, this announcement must be made less than 15 days before the meeting will take place.

**DATES:** August 27, 1999, 8:30 a.m. to 12:30 p.m.

**ADDRESSES:** 4000 Defense Pentagon, Washington, D.C. 20301–4000

**FOR FURTHER INFORMATION CONTACT:** Dr. Hector O. Nevarez, the Designated Federal Officer, 1401 Wilson Boulevard, Suite 400, Arlington, VA 22209, phone (703) 696–9456, fax (703) 696–9482, or via Email at *Hector.Nevarez@osd.pentagon.mil.*

Dated: August 25, 1999.

**L.M. Bynum,**

*Alternate OSD Federal Register, Liaison Officer, Department of Defense.*

[FR Doc. 99–22569 Filed 8–30–99; 8:45 am]

BILLING CODE 5001–10–M

## DEPARTMENT OF DEFENSE

### Office of the Secretary

### Global Positioning System (GPS) Spectrum Protection Report to Congress

**AGENCY:** Department of Defense.

**ACTION:** Notice of request for comments on Global Positioning system (GPS) spectrum report to Congress.

**SUMMARY:** An interagency working group chaired by the Department of Defense requests comments and recommendations from industry and end users relating to the development of a report to Congress addressing the national strategy for protection of the radionavigation spectrum used by GPS. All persons and firms having relevant views on this subject are invited to reply through the Department of Defense.

**DATES:** Pleas submit comments by November 1, 1999.

**ADDRESSES:** Submit comments to the Office of Space Commercialization, U.S. Department of Commerce, 14th Street and Constitution Avenue, NW., Room 4817, Washington, DC 20230. Materials may be faxed to 202–482–5173 or transmitted via email to jkim@ta.doc.gov. Comments can also be sent via the following website URL which will contain a reprint of this RFC: http://www.ta.doc.gov/space.spectrum.

**FOR FURTHER INFORMATION CONTACT:** Jason Y. Kim, Policy Analyst, 202–482–6125.

**SUPPLEMENTARY INFORMATION:** In order to guard against disruption of GPS services that are vital to the national security and economic interests of the Untied States, the Department of Defense is preparing a report, at the request of Congress, setting forth a national strategy to: ''(1) protect the integrity of the Global Positioning System frequency spectrum against interference and disruption; (2) achieve full and effective use by GPS of radio frequency spectrum currently allocated by the International Telecommunications Union (ITU) for transmission of satellite navigation signals; and (3) provide for any additional allocation of spectrum necessary for GPS evolution.'' The report is required under Section 8137 of the Department of Defense Appropriations Act of 1999.

The Government is issuing this public Request for Comments in the hope of developing an appropriate overall national strategy that incorporates and reflects the important interests of the industry and end users. For the purposes of this RFC, all commercial, terrestrial, and space-based radionavigation and radio communication users and ventures are invited to participate, including, but not limited to, GPS equipment manufactures, satellite manufactures, users of GPS equipment and services. In addition, we seek comment from any entity that (1) uses or has an interest in the protection of the radionavigation spectrum used by GPS in general, or (2) has an interest in other spectrum bands on which the services may be required to configure their operations to accommodate provision of GPS. Responses to this RFC should include any plans for collection and analysis of test and demonstration data, and recommendations for additional filings for both space-based and ground-based services, as appropriate, to meet civil safety-of-life applications within existing international spectrum bands allocated for radionavigation satellite operations.

An interagency working group chaired by the Department of Defense and including participants from the Department of Commerce (which includes the National Department of Commerce (which includes the National Telecommunications and Information Administration), Department of State, Department of Transportation, Office of Science and Technology Policy, and National Aeronautics and Space Administration will review all replies.

The staff of the Federal Communications Commission will provide technical assistance in the preparation of this report. A single hardcopy and softcopy is requested for all submittals. Appropriately labeled competition-sensitive or proprietary data will be protected as required. This is not a request for proposal and it shall not be construed as a commitment by the government to issue a solicitation or ultimately award a contract.

Dated: August 25, 1999.

**L.M. Bynum,**

*Alternate OSD Federal Register Liaison Officer, Department of Defense.*

[FR Doc. 99–22566 Filed 8–30–99; 8:45 am]

BILLING CODE 5001–10–M

## DEPARTMENT OF DEFENSE

### Department of the Air Force

### Public Meeting With the Community College of the Air Force Board of Visitors to Review and Discuss Academic Policies and Issues Relative to the Operation of the College

**AGENCY:** Department of the Air Force, DoD.

**ACTION:** Notice of Meeting.

**SUMMARY:** The Community College of the Air Force (CCAF) Board of Visitors will hold a meeting to review and discuss academic policies and issues relative to the operation of the college. Agenda items include a review of the operations of the CCAF and an update on the activities of the CCAF Policy Council.

Members of the public who wish to make oral or written statements at the meeting should contact First Lieutenant Matthew Groleau, Designated Federal Officer for the Board, at the address below no later than 4:00 p.m. on October 26, 1999. Please mail or electronically mail all requests. Telephone requests will not be honored. The request should identify the name of the individual who will make the presentation and an outline of the issues to be addressed. A minimum of 35 copies of the presentation materials must be provided to First Lieutenant Groleau no later than 3 days prior to the time of the board meeting for distribution. Visual aids must be submitted to First Lieutenant Groleau on a 3–½″ computer disc in Microsoft PowerPoint format no later than 4:00 p.m. on October 26, 1999 to allow sufficient time for virus scanning and formatting of the slides.

**DATES:** The meeting will be held on Tuesday, November 9, 1999, at 8:00 a.m. in the AETC Conference Center, Building 905, 1 F Street, Randolph Air Force Base, Texas 78150.

**FOR FURTHER INFORMATION CONTACT:** First Lieutenant Matthew Groleau, (334) 953–7322, Community College of the Air Force, 130 West Maxwell Boulevard, Maxwell Air Force Base, Alabama, 36112–6613, or through electronic mail to matthew.groleau@maxwell.af.mil.

**Janet A. Long,**

*Air Force Federal Register Liaison Officer.*

[FR Doc. 99–22544 Filed 8–30–99; 8:45 am]

BILLING CODE 5001–05–P

## DEPARTMENT OF EDUCATION

### National Commission on Mathematics and Science Teaching for the 21st Century; Meeting

**AGENCY:** National Commission on Mathematics and Science Teaching for the 21st Century, Department of Education.

**ACTION:** Notice of meeting.

**SUMMARY:** This notice sets forth the schedule and proposed agenda of a forthcoming meeting of the National Commission on Mathematics and Science Teaching for the 21st Century (Commission). This notice also describes the functions of the Commission. Notice of this meeting is required under Section 10(a)(2) of the Federal Advisory Committee Act and is intended to notify the general public of their opportunity to attend.

**DATE AND TIME:** Thursday, September 23, 1999, beginning at 9:00 a.m. and ending at approximately 5:00 p.m.

**ADDRESSES:** The Washington Court Hotel, 525 New Jersey Avenue, SW, Washington, DC 20001–1527.

**FOR FURTHER INFORMATION CONTACT:** Dr. Linda P. Rosen, The National Commission on Mathematics and Science Teaching for the 21st Century, U.S. Department of Education, Room 6W252, 400 Maryland Avenue, SW, Washington, DC 20202, telephone: (202) 260–8229, fax: (202) 260–7216.

**SUPPLEMENTARY INFORMATION:** The National Commission on Mathematics and Science Teaching for the 21st Century is established by the Secretary of Education and is governed by the provisions of the Federal Advisory Committee Act (FACA) (Pub. L. 92–463, as amended; 5 U.S.C.A. Appendix 2). The Commission is established to address the pressing need to significantly raise student achievement in mathematics and science. The Commission will develop a multifaceted action strategy aimed at improving the recruitment, preparation, support systems, and opportunities for growth needed for high quality mathematics and science instruction in K–12 classrooms nationwide.

The meeting of the Commission is open to the public. The proposed agenda includes sessions on: (a) How the Commission will solicit and process public input and reach consensus on its ultimate recommendations; (b) the characteristics of high-quality mathematics and science teaching; (c) the link between higher student achievement and teaching quality; and (d) supply and demand issues nationwide for teachers who provide mathematics and science instruction in grades K–12. The agenda will include plenary discussions as well as presentations by James Stigler, Professor of Psychology at the University of California at Los Angeles and Director of the Third International Mathematics and Science Video Study, and Linda Darling-Hammon, Professor of Education at Stanford University and Executive Director of the National Commission on Teaching and America's Future.

Space is limited and you are encouraged to register if you plan to attend. You may register through the Internet at *AmericaCounts@ed.gov* or *Jamila Rattler@ed.gov*. Please include your name, title, affiliation, complete address (including e-mail, if available), telephone and fax numbers. If you are unable to register through the Internet, you may fax your registration information to The National Commission on Mathematics and Science Teaching for the 21st Century at (202) 260–7216 or mail to The National Commission on Mathematics and Science Teaching for the 21st Century, U.S. Department of Education, Room 6W252, 400 Maryland Avenue, SW, Washington, DC 20202. The registration deadline is September 16, 1999. Any individual who will need accommodations for a disability in order to participate in the meeting (i.e., interpreting services, assistive listening devices, materials in alternative format) should notify Jamila Rattler at (202) 260–8229 by no later than September 14, 1999. We will attempt to meet requests after this date, but cannot guarantee availability of the requested accommodation. The meeting site is accessible to individuals with disabilities.

Records will be kept of all Commission proceedings, and will be available for public inspection at The National Commission on Mathematics and Science Teaching for the 21st Century, 400 Maryland Avenue, SW,

Room 6W252 from the hours of 8:30 a.m. to 5:00 p.m. weekdays, except Federal holidays.

**Marshall S. Smith,**

*Acting Deputy Secretary.*

[FR Doc. 99–22647 Filed 8–30–99; 8:45 am]

BILLING CODE 4000–01–M

## DEPARTMENT OF EDUCATION

**[CFDA No.: 84.038, 84.033, and 84.007]**

## Office of Student Financial Assistance Programs; Federal Perkins Loan, Federal Work-Study, and Federal Supplemental Educational Opportunity Grant Programs

**AGENCY:** Department of Education.

**ACTION:** Notice of the closing date for institutions to submit a request for a waiver of the allocation reduction for the underuse of funds under the Federal Perkins Loan, Federal Work-Study (FWS), and Federal Supplemental Educational Opportunity Grant (FSEOG) programs (known collectively as the campus-based programs).

**SUMMARY:** The Secretary gives notice to institutions of higher education of the deadline for an institution to submit a written request for a waiver of the allocation reduction being applied to its Federal Perkins Loan, FWS, or FSEOG allocation for the 2000–2001 award year (July 1, 2000 through June 30, 2001) because the institution returned more than 10 percent of its allocation for that program for the 1998–1999 award year (July 1, 1998 through June 30, 1999).

**DATES:** *Closing Date and Methods for Submitting a Waiver Request and Supporting Information or Documents.* For an institution that returned more than 10 percent of its Federal Perkins Loan, FWS, or FSEOG allocation for the 1998–1999 award year to be considered for a waiver of the allocation reduction for its 2000–2001 award year allocation, it must request a waiver of the underuse penalty, provide a written explanation of the circumstances that caused the underuse of its allocation, and submit any additional documentation to support the explanation by October 1, 1999.

An institution may request a waiver of the underuse penalty by selecting the ''Yes'' box in Part II, Section E, Line 8 of its Fiscal Operation Report for 1998–99 and Application to Participate for 2000–2001 (FISAP), and provide a written explanation of the circumstances that caused the underuse of its allocation on the electronic FISAP ''Additional Information Screen.'' This request and explanation must be transmitted electronically by the established FISAP deadline of October 1, 1999.

In addition, an institution may mail or have hand-delivered any additional documentation that supports its written explanation of the circumstances that caused the underuse of its allocation. The documentation may be included with the FISAP signature page and certification forms. The documentation must be mailed or delivered by hand to one of the addresses indicated in this notice by the established deadline date of October 1, 1999.

**ADDRESSES:** *Supporting Documents Delivered by Mail.* If these documents are delivered by mail, they must be addressed to Electronic FISAP Administrator, c/o Universal Automation Labs (UAL), Suite 500, 8300 Colesville Road, Silver Spring, Maryland 20910.

An institution must show proof of mailing these documents by October 1, 1999. Proof of mailing consists of one of the following: (1) A legible mail receipt with the date of mailing stamped by the U.S. Postal Service, (2) a legibly dated U.S. Postal Service postmark, (3) a dated shipping label, invoice, or receipt from a commercial carrier, or (4) any other proof of mailing acceptable to the U.S. Secretary of Education.

If these documents are sent through the U.S. Postal Service, the Secretary does not accept either of the following as proof of mailing: (1) A private metered postmark, or (2) a mail receipt that is not dated by the U.S. Postal Service. An institution should note that the U.S. Postal Service does not uniformly provide a dated postmark. Before relying on this method, an institution should check with its local post office. An institution is encouraged to use certified or at least first-class mail.

*Supporting Documents Delivered by Hand.* If these documents are delivered by hand, they must be taken to Universal Automation Labs (UAL), Suite 500, 8300 Colesville Road, Silver Spring, Maryland.

Documents that are hand-delivered will be accepted between 9 a.m. and 5 p.m. daily (Eastern time), except Saturdays, Sundays, and Federal holidays. Documents that are hand-delivered will not be accepted after 5 p.m. on October 1, 1999.

**SUPPLEMENTARY INFORMATION:**

Under sections 413D(d)(2), 442(d)(2), and 462(i)(4) of the Higher Education Act of 1965, as amended, if an institution returns more than 10 percent of its Federal Perkins Loan, FWS, or FSEOG allocation for an award year, the institution will have its allocation for the second succeeding award year for that program reduced by the dollar amount returned. The Secretary may waive this requirement for a specific institution if the Secretary finds that enforcement of the requirement would be contrary to the interest of the affected campus-based program. The institution must provide a waiver request and any supporting information or documents by the established October 1, 1999 closing date. If the institution submits a waiver request and any supporting information or documents after the closing date, the request will not be considered.

### Applicable Regulations

The following regulations apply to the campus-based programs:

(1) Student Assistance General Provisions, 34 CFR Part 668.

(2) General Provisions for the Federal Perkins Loan Program, Federal Work-Study Program, and Federal Supplemental Educational Opportunity Grant Program, 34 CFR Part 673.

(3) Federal Perkins Loan Program, 34 CFR Part 674.

(4) Federal Work-Study Programs, 34 CFR Part 675.

(5) Federal Supplemental Educational Opportunity Grant Program, 34 CFR Part 676.

(6) Institutional Eligibility Under the Higher Education Act of 1965, as amended, 34 CFR Part 600.

(7) New Restrictions on Lobbying, 34 CFR Part 82.

(8) Governmentwide Debarment and Suspension (Nonprocurement) and Governmentwide Requirements for Drug-Free Workplace (Grants), 34 CFR Part 85.

(9) Drug-Free Schools and Campuses, 34 CFR Part 86.

**FOR FURTHER INFORMATION CONTACT:** For technical assistance concerning the waiver request or other operational procedures of the campus-based programs, contact: Ms. Sandra K. Donelson, Institutional Financial Management Division, U.S. Department of Education, P.O. Box 23781, Washington, DC 20026–0781. Telephone (202) 708–9751.

Individuals who use a telecommunications device for the deaf (TDD) may call the Federal Information Relay Service (FIRS) at 1–800–877–8339 between 8 a.m. and 8 p.m., Eastern time, Monday through Friday.

Individuals with disabilities may obtain this document in an alternate format (e.g., Braille, large print, audiotape, or computer diskette) by contacting the person listed in the preceding paragraph.

Electronic Access to This Document

Anyone may view this document, as well as all other Department of Education documents published in the **Federal Register**, in text or Adobe Portable Document Format (PDF) on the World Wide Web at either of the following sites:

*http://ocfo.ed.gov/fedreg.htm*
*http://www.ed.gov/news.html*

To use the PDF you must have the Adobe Acrobat Reader Program with Search, which is available free at either of the previous sites. If you have questions about using the PDF, call the U.S. Government Printing Office (GPO) toll free, at 1–888–293–6498; or in the Washington, DC, area at (202) 512–1530.

**Note:** The official version of this document is the document published in the **Federal Register**. Free Internet access to the official edition of the **Federal Register** and the Code of Federal Regulations is available on GPO Access at: *http://www.access.gpo.gov/nara/index.html*

**Program Authority:** 20 U.S.C. 1087aa *et seq.*; 42 U.S.C. 2751 *et seq.*; and 20 U.S.C. 1070b *et seq.*

Dated: August 25, 1999.

**Greg Woods,**

*Chief Operating Officer, Office of Student Financial Assistance.*

[FR Doc. 99–22637 Filed 8–30–99; 8:45 am]

BILLING CODE 4000–01–P

## DEPARTMENT OF EDUCATION

**[CFDA No.: 84.038, 84.033, and 84.007]**

## Office of Student Financial Assistance Programs; Federal Perkins Loan, Federal Work-Study, and Federal Supplemental Educational Opportunity Grant Programs

**AGENCY:** Department of Education.

**ACTION:** Notice of the closing date for the submission of the Fiscal Operations Report for 1998–1999 and Application to Participate for 2000–2001 (FISAP) in the Federal Perkins Loan, Federal Supplemental Educational Opportunity Grant (FSEOG), and Federal Work-Study (FWS) Programs (ED FORM 646–1; OMB No. 1840–0073).

**SUMMARY:** The Secretary gives notice to institutions of higher education of the deadline for an institution to apply for fiscal year 2000 funds—for use in the 2000–2001 award year (July 1, 2000 through June 30, 2001)—under the Federal Perkins Loan, FWS, and FSEOG programs. Under these programs, the Secretary allocates funds to institutions for students who need financial aid to meet the costs of postsecondary education. An institution is not required to establish eligibility prior to applying for funds. However, the Secretary will not allocate funds under the Federal Perkins Loan, FWS, and FSEOG programs for the 2000–2001 award year to any currently ineligible institution unless the institution files its institutional participation application and other documents required for an eligibility and certification determination by the closing date that will appear in a separate notice in the **Federal Register**. The Secretary further gives notice that an institution that had a Federal Perkins Loan fund or expended FWS or FSEOG funds during the 1998–1999 award year (July 1, 1998, through June 30, 1999) is required to submit a Fiscal Operations Report to the Secretary to report its program expenditures as of June 30, 1999.

Applicants that did not participate in the Federal Perkins Loan Program, FWS Program, or FSEOG Program in the 1998–1999 award year will be required to submit data for the application portion of the FISAP only.

In addition, an institution must complete, sign, and submit one original FISAP signature page and one original combined lobbying, debarment, and drug-free workplace certifications form (ED 80–0013, referred to as the ''compliance certifications'' form) for the 2000–2001 award year.

The Federal Perkins Loan, FWS, and FSEOG programs are authorized by parts E and C, and part A, Subpart 3, respectively, of title IV of the Higher Education Act of 1965, as amended.

**DATES:** *Closing Date and Methods for Submitting a FISAP and Required Signed Documents.* To ensure consideration for 2000–2001 funds, an institution must submit an electronic FISAP, the FISAP signature page, and the ''compliance certifications'' form by October 1, 1999.

An institution must submit its FISAP to the Campus-Based contractor via the Department's Title IV Wide Area Network (WAN) using EDConnect. The Title IV WAN enables an institution to receive and transmit FISAP information electronically.

The FISAP electronic data transmission must be completed prior to midnight, Eastern time, on October 1, 1999. (For purposes of this notice, this deadline means that an institution has all of October 1, 1999, to transmit electronically.) In addition, one original completed FISAP signature page and one original signed ''compliance certifications'' form must be mailed or delivered by hand to the address indicated below by the established deadline date of October 1, 1999.

**ADDRESSES:** *Signature Page and Compliance Certifications Form Delivered by Mail.* If these documents are delivered by mail, they must be addressed to Electronic FISAP Administrator, c/o Universal Automation Labs (UAL), Suite 500, 8300 Colesville Road, Silver Spring, Maryland 20910.

An institution must show proof of mailing these documents by October 1, 1999. Proof of mailing consists of one of the following: (1) A legible mail receipt with the date of mailing stamped by the U.S. Postal Service, (2) a legibly dated U.S. Postal Service postmark, (3) a dated shipping label, invoice, or receipt from a commercial carrier, or (4) any other proof of mailing acceptable to the U.S. Secretary of Education.

If these documents are sent through the U.S. Postal Service, the Secretary does not accept either of the following as proof of mailing: (1) A private metered postmark, or (2) a mail receipt that is not dated by the U.S. Postal Service. An institution should note that the U.S. Postal Service does not uniformly provide a dated postmark. Before relying on this method, an institution should check with its local post office. An institution is encouraged to use certified or at least first-class mail.

### Signature Page and Compliance Certifications Form Delivered by Hand

If these documents are delivered by hand, they must be taken to Universal Automation Labs (UAL), Suite 500, 8300 Colesville Road, Silver Spring, Maryland.

Documents that are hand-delivered will be accepted between 9 a.m. and 5 p.m. daily (Eastern time), except Saturdays, Sundays, and Federal holidays. Documents that are hand-delivered will not be accepted after 5 p.m. on October 1, l999.

**SUPPLEMENTARY INFORMATION:** FISAP materials were mailed by the Department in July 1999. An institution must prepare and submit its FISAP in accordance with the information included in the FISAP program information package.

This program information package is intended to aid applicants in applying for assistance under these programs. Nothing in the program information package is intended to impose any paperwork, application content, reporting, or grantee performance requirements beyond those specifically imposed under the statute and regulations governing the programs.

## Applicable Regulations

The following regulations apply to these programs:

(1) Student Assistance General Provisions, 34 CFR Part 668.

(2) General Provisions for the Federal Perkins Loan Program, Federal Work-Study Program, and Federal Supplemental Educational Opportunity Grant Program, 34 CFR Part 673.

(3) Federal Perkins Loan Program, 34 CFR Part 674.

(4) Federal Work-Study Programs, 34 CFR Part 675.

(5) Federal Supplemental Educational Opportunity Grant Program, 34 CFR Part 676.

(6) Institutional Eligibility Under the Higher Education Act of 1965, as amended, 34 CFR Part 600.

(7) New Restrictions on Lobbying, 34 CFR Part 82.

(8) Governmentwide Debarment and Suspension (Nonprocurement) and Governmentwide Requirements for Drug-Free Workplace (Grants), 34 CFR Part 85.

(9) Drug-Free Schools and Campuses, 34 CFR Part 86.

**FOR FURTHER INFORMATION CONTACT:** Ms.Sandra Donelson, Campus-Based Financial Operations Branch, Institutional Financial Management Division, Accounting and Financial Management Service, Student Financial Assistance Programs, U.S. Department of Education, 400 Maryland Avenue, SW, (Room 4714, ROB–3), Washington, DC 20202–5458. Telephone (202) 708–9751. Individuals who use a telecommunications device for the deaf (TDD) may call the Federal Information Relay Service (FIRS) at 1–800–877–8339 between 8 a.m. and 8 p.m., Eastern time, Monday through Friday.

Individuals with disabilities may obtain this document in an alternative format (e.g., Braille, large print, audiotape or computer diskette) on request to the contact person listed in the preceding paragraph.

## Electronic Access to This Document

You may view this document, as well as all other Department of Education documents published in the **Federal Register**, in text or Adobe Portable Document Format (PDF) on the Internet at either of the following sites:

*http://ocfo.ed.gov/fedreg.htm*
*http://www.ed.gov/news.html*

To use the PDF you must have the Adobe Acrobat Reader Program with Search, which is available free at either of the previous sites. If you have questions about using the PDF, call the U.S. Government Printing Office (GPO), toll free, at 1–888–293–6498; or in the Washington, DC, area at (202) 512–1530.

**Note:** The official version of this document is the document published in the **Federal Register**. Free internet access to the official edition of the **Federal Register** and the Code of Federal Regulations is available on GPO Access at: *http://www.access.gpo.gov/nara/index.html*

**Program Authority:** 20 U.S.C. 1087aa *et seq.*; 42 U.S.C. 2751 *et seq.*; and 20 U.S.C. 1070b *et seq.*

Dated: August 25, 1999.

**Greg Woods,**

*Chief Operating Officer, Office of Student Financial Assistance.*

[FR Doc. 99–22638 Filed 8–30–99; 8:45 am]

BILLING CODE 4000–01–P

---

# DEPARTMENT OF EDUCATION

## Notice of Membership of the Performance Review Board (PRB)

**SUMMARY:** The Secretary announces the names of members of the PRB for the Department of Education. Under 5 U.S.C. 4314(c)(1) through (5), each agency is required to establish one or more Senior Executive Service (SES) PRBs. The PRB reviews and evaluates the initial appraisal of a senior executive's performance along with any comments by senior executives and any higher level executive and makes recommendations to the appointing authority relative to the performance of the senior executive, including making recommendations on performance awards. Recommendations on SES pay level adjustments are also made by the PRB.

## Membership

The following executives of the Department of Education have been selected to serve on the Performance Review Board of the Department of Education: Willie Gilmore, Chair, Judith Winston, Co-Chair, Philip Link, Steven Winnick, Jeanette Lim, Carol Cichowski, Thomas Skelly, Ricky Takai, Maureen McLaughlin, Linda Paulsen, John Higgins, Steven McNamara, Mary Jean LeTendre, Arthur Cole, Patricia Guard, Francis Corrigan, Gary Phillips, Edward Fuentes, Dennis Berry, William Smith, Hazel Fiers, Diane Rossi, Carol Rasco, Linda Roberts, Raymond Pierce, Katherine Seelman, D. Jean Veta. The following executives have been selected to serve as alternate members of the PRB: Peirce Hammond, Thomas Pestka, Arthur Coleman, Claudio Prieto.

**FOR FURTHER INFORMATION CONTACT:** Althea Watson, Director, Executive Resources Team, Human Resources Group, Office of Management, Department of Education, Room 2E124, FB–6, 400 Maryland Avenue, SW, Washington, DC 20202, Telephone: (202) 401–0546. Individuals who use a telecommunications device for the deaf (TDD) may call the Federal Information Relay Service (FIRS) at 1–800–877–8339 between 8 a.m. and 8 p.m., Eastern time, Monday through Friday.

Individuals with disabilities may obtain this document in an alternate format (e.g., Braille, large print, audiotape, or computer diskette) on request to the contact person listed in the preceding paragraph.

## Electronic Access to This Document

You may view this document, as well as all other Department of Education documents published in the **Federal Register**, in text or Adobe Portable Document Format (PDF) on the internet at either of the following sites:

http://ocfo.ed.gov/fedreg.htm
http://www.ed.gov/new.html

To use the PDF you must have the Adobe Acrobat Reader Program with Search, which is available free at either of the previous sites. If you have questions about using the PDF, call the U.S. Government Printing Office, toll free, at 1–888–293–6498; or in the Washington DC area at (202) 512–1530.

**Note:** The official version of a document is the document published in the **Federal Register**. Free internet access to the official edition of the **Federal Register** and the Code of Federal Regulations is available on GPO access at: http://www.access.gpo.gov/nara/index.html

Dated: August 25, 1999.

**Richard W. Riley,**

*Secretary of Education.*

[FR Doc. 99–22639 Filed 8–30–99; 8:45 am]

BILLING CODE 4000–01–P

---

# DEPARTMENT OF ENERGY

## Office of Fossil Energy

**[Docket No. FE C&E 99–16–Certification Notice—177]**

## Tenaska Gateway Partners, Ltd.; Notice of Filing of Coal Capability; Powerplant and Industrial Fuel Use Act

**AGENCY:** Office of Fossil Energy, Department of Energy.

**ACTION:** Notice of filing.

**SUMMARY:** On August 10, 1999, Tenaska Gateway Partners, Ltd. submitted a coal capability self-certification pursuant to section 201 of the Powerplant and Industrial Fuel Use Act of 1978, as amended.

**ADDRESSES:** Copies of self-certification filings are available for public inspection, upon request, in the Office of Coal & Power Im/Ex, Fossil Energy,

Room 4G–039, FE–27, Forrestal Building, 1000 Independence Avenue, SW, Washington, DC 20585.

**FOR FURTHER INFORMATION CONTACT:** Ellen Russell at (202) 586–9624.

**SUPPLEMENTARY INFORMATION:** Title II of the Powerplant and Industrial Fuel Use Act of 1978 (FUA), as amended (42 U.S.C. 8301 *et seq.*), provides that no new baseload electric powerplant may be constructed or operated without the capability to use coal or another alternate fuel as a primary energy source. In order to meet the requirement of coal capability, the owner or operator of such facilities proposing to use natural gas or petroleum as its primary energy source shall certify, pursuant to FUA section 201(d), to the Secretary of Energy prior to construction, or prior to operation as a base load powerplant, that such powerplant has the capability to use coal or another alternate fuel. Such certification establishes compliance with section 201(a) as of the date filed with the Department of Energy. The Secretary is required to publish a notice in the **Federal Register** that a certification has been filed. The following owner/operator of the proposed new baseload powerplant has filed a self-certification in acccordance with section 201(d).

*Owner:* Tenaska Gateway Partners, Ltd.

*Operator:* Tenaska Gateway Partners, Ltd.

*Location:* Rusk County, TX.

*Plant Configuration:* Combined-cycle.

*Capacity:* 800 MW.

*Fuel:* Natural gas.

*Purchasing Entities:* Coral Power, L.L.C. and Coral Energy, L.P.

*In-Service Date:* June 2001.

Issued in Washington, D.C., August 25, 1999.

**Anthony J. Como,**

*Deputy Director, Electric Power Regulation, Office of Coal & Power Im/Ex, Office of Coal & Power Systems, Office of Fossil Energy.*

[FR Doc. 99–22625 Filed 8–30–99; 8:45 am]

BILLING CODE 6450–01–P

## DEPARTMENT OF ENERGY

### Federal Energy Regulatory Commission

**[Docket No. RP99–476–000]**

### Gas Transport, Inc.; Notice of Proposed Changes in FERC Gas Tariff

August 25, 1999.

Take notice that on August 20, 1999, Gas Transport, Inc. (GTI) tendered for filing Seventh Revised Sheet No. 162 and Sixth Revised Sheet No. 162A to its FERC Gas Tariff, Second Revised Volume No. 1, with a proposed effective date of August 1, 1999.

GTI states that the purpose of this filing is to comply with Order No. 587–K (Order). The order amends Section 284.10 of the Commission's Regulations to incorporate by reference the most recent standards, version 1.3, promulgated by the Gas Industry Standards Board. GTI's filing also indicated that a correction was also made to remove the reference to principles 1.1.17–1.1.19.

GTI states that copies of this filing were served upon its firm customers and interested state commissions. Copies were also served on all interruptible customers as of the date of the filing.

Any person desiring to be heard or to protest said filing should file a motion to intervene or a protest with the Federal Energy Regulatory Commission, 888 First Street, NE, Washington, DC 20426, in accordance with Sections 385.214 or 385.211 of the Commission's Rules and Regulations. All such motions or protests must be filed in accordance with Section 154.210 of the Commission's Regulations. Protests will be considered by the Commission in determining the appropriate action to be taken, but will not serve to make protestants parties to the proceedings. Any person wishing to become a party must file a motion to intervene. Copies of this filing are on file with the Commission and are available for public inspection in the Public Reference Room. This filing may be viewed on the web at http://www.ferc.fed.us/online/rims.htm (call (202) 208–2222 for assistance).

**Linwood A. Watson, Jr.,**

*Acting Secretary.*

[FR Doc. 99–22522 Filed 8–30–99; 8:45 am]

BILLING CODE 6717–01–M

## DEPARTMENT OF ENERGY

### Federal Energy Regulatory Commission

**[Docket Nos. ER99–3208–000, ER99–3320–000, ER99–3368–000, ER99–3420–000, ER99–3446–000, ER99–3450–000, ER99–3491–000, ER99–3502–000, and ER99–3554–000 (Not consolidated)]**

### Illinova Power Marketing, Inc., Rathdrum Power, LLC, DTE Energy Marketing Company, Sunbury Generation, LLC, PP&L Resources, Inc. and PP&L, Inc., Foote Creek II, LLC, PP&L Montana, LLC, PP&L Colstrip I, LLC, PP&L Colstrip II, LLC and PP&L Colstrip III, LLC, Berkshire Power Company, LLC, and Lone Star Steel Sales Company; Notice of Issurance of Order

August 25, 1999.

Illinova Power Marketing, Inc., Rathdrum Power, LLC, DTE Energy Marketing Company, Sunbury Generation, LLC, PP&L Resources, Inc. and PP&L, Inc., Foote Creek II, PP&L Montana, LLC, PP&L Colstrip I, LLC, PP&L Colstrip II, LLC, PP&L Colstrip III, LLC, Berkshire Power Company, LLC, and Lone Star Steel Sales Company (hereafter, ''the Applicants'') filed with the Commission rate schedules in the above-captioned proceedings, respectively, under which the Applicants will engage in wholesale electric power and energy transactions at market-based rates, and for certain waivers and authorizations. In particular, certain of the Applicants may also have requested in their respective applications that the Commission grant blanket approval under 18 CFR Part 34 of all future issuances of securities and assumptions of liabilities by the Applicants. On August 24, 1999, the Commission issued an order that accepted the rate schedules for sales of capacity and energy at market-based rates (Order), in the above-docketed proceedings.

The Commission's August 24, 1999 Order granted, for those Applicants that sought such approval, their request for blanket approval under Part 34, subject to the conditions found in Appendix B in Ordering Paragraphs (2), (3), and (5):

(2) Within 30 days of the date of this order, any person desiring to be heard or to protest the Commission's blanket approval of issuances of securities or assumptions of liabilities by the Applicants should file a motion to intervene or protest with the Federal Energy Regulatory Commission, 888 First Street, N.E. Washington, D.C. 20426, in accordance with Rules 211 and 214 of the Commission's Rules of

Practice and Procedure, 18 CFR 385.211 and 385.214.

(3) Absent a request to be heard within the period set forth in Ordering Paragraph (2) above, if the Applicants have requested such authorization, the Applicants are hereby authorized to issue securities and assume obligations and liabilities as guarantor, indorser, surety or otherwise in respect of any security of another person; provided that such issue or assumption is for some lawful object within the corporate purposes of the Applicants, compatible with the public interest, and reasonably necessary or appropriate for such purposes.

(5) The Commission reserves the right to modify this order to require a further showing that neither public nor private interests will be adversely affected by continued Commission approval of the Applicants' issuances of securities or assumptions of liabilities * * *.

Notice is hereby given that the deadline for filing motions to intervene or protests, as set forth above, is September 23, 1999.

Copies of the full text of the Order are available from the Commission's Public Reference Branch, 888 First Street, N.E., Washington, D.C. 20426. This issuance may also be viewed on the Internet at *http://www.ferc.fed.us/*online/rims.htm (call 202–208–222 for assistance).

**Linwood A. Watson, Jr.,**

*Acting Secretary.*

[FR Doc. 99–22578 Filed 8–30–99; 8:45 am]

BILLING CODE 6717–01–M

---

## DEPARTMENT OF ENERGY

## Federal Energy Regulatory Commission

**[Docket No. TM00–1–131–000]**

## KO Transmission Company; Notice of Proposed Changes in FERC Gas Tariff

August 25, 1999.

Take notice that on August 20, 1999, KO Transmission Company (KO Transmission) tendered for filing as part of its FERC Gas Tariff, Original Volume No. 1, the following tariff sheet with a proposed effective date of October 1, 1999:

Seventh Revised Sheet No. 10

KO Transmission states that the purpose of this filing is to revise the Annual Charge Adjustment surcharge to $0.0022 per dekatherm in accordance with 18 CFR 154.402(c).

KO Transmission states that copies of this filing were served to all of its customers.

Any person desiring to be heard or to protest said filing should file a motion to intervene or a protest with the Federal Energy Regulatory Commission, 888 First Street, NE, Washington, DC 20426, in accordance with Sections 385.214 or 385.211 of the Commission's Rules and Regulations. All such motions or protests must be filed in accordance with Section 154.210 of the Commission's Regulations. Protests will be considered by the Commission in determining the appropriate action to be taken, but will not serve to make protestants parties to the proceedings. Any person wishing to become a party must file a motion to intervene. Copies of this filing are on file with the Commission and are available for public inspection in the Public Reference Room. This filing may be viewed on the web at http://www.ferc.fed.us/online/rims.htm (call 202–208–2222 for assistance).

**Linwood A. Watson, Jr.,**

*Acting Secretary.*

[FR Doc. 99–22523 Filed 8–30–99; 8:45 am]

BILLING CODE 6717–01–M

---

## DEPARTMENT OF ENERGY

## Federal Energy Regulatory Commission

**[Docket No. RP99–474–000]**

## Natural Gas Pipeline Company of America; Notice of Changes in FERC Gas Tariff

August 25, 1999.

Take notice that on August 20, 1999, Natural Gas Pipeline Company of America (Natural) tendered for filing certain tariff sheets to be part of its FERC Gas Tariff, Sixth Revised Volume No. 1 (Tariff), to be effective October 1, 1999.

Natural states that the filing has been submitted to reflect a series of changes to update Natural's Tariff by removing or revising provisions which are outmoded, incorporating modifications to existing provisions consistent with Federal Energy Regulatory Commission action on other pipelines, correcting errors and modifying certain existing provisions to achieve greater clarity and effectiveness.

Natural requests any waivers which may be required to permit the tendered tariff sheets to become effective October 1, 1999.

Natural states that copies of the filing have been mailed to its customers and interested state regulatory agencies.

Any person desiring to be heard or to protest said filing should file a motion to intervene or a protest with the Federal Energy Regulatory Commission, 888 First Street, NE, Washington, DC 20426, in accordance with Sections 385.214 or 385.211 of the Commission's Rules and regulations. All such motions or protests must be filed in accordance with Section 154.210 of the Commission's Regulations. Protests will be considered by the Commission in determining the appropriate action to be taken, but will not serve to make protestants parties to the proceedings. Any person wishing to become a party must file a motion to intervene. Copies of this filing are on file with the Commission and are available for public inspection in the Public Reference Room. This filing may be viewed on the web at http://www.ferc.fed.us/online/rims.htm (call 202–208–2222 for assistance).

**Linwood A. Watson, Jr.,**

*Acting Secretary.*

[FR Doc. 99–22520 Filed 8–30–99; 8:45 am]

BILLING CODE 6717–01–M

---

## DEPARTMENT OF ENERGY

## Federal Energy Regulatory Commission

**[Docket No. RP99–473–000]**

## Reliant Energy Gas Transmission Company; Notice of Proposed Changes in FERC Gas Tariff

August 25, 1999.

Take notice that on August 20, 1999, Reliant Energy Gas Transmission Company (REGT) tendered for filing as part of its FERC Gas Tariff, Fifth Revised Volume No. 1, the following revised tariff sheets to be effective September 20, 1999:

First Revised Sheet No. 526
First Revised Sheet No. 527
First Revised Sheet No. 528
First Revised Sheet No. 529
First Revised Sheet No. 530
First Revised Sheet No. 531
First Revised Sheet No. 532
Original Sheet No. 533
Original Sheet No. 534
Original Sheet No. 535

REGT states that the purpose of this filing is to replace its Electronic Data Interchange (EDI) Trading Partner Agreement (TPA) with the current GISB EDI TPA model.

Any person desiring to be heard or to protest said filing should file a motion to intervene or a protest with the Federal Energy Regulatory Commission, 888 First Street, NE, Washington, DC 20426, in accordance with Sections 385.214 or 385.211 of the Commission's Rules and Regulations. All such motions or protests must be filed in accordance

with Section 154.210 of the Commission's Regulations. Protests will be considered by the Commission in determining the appropriate action to be taken, but will not serve to make protestants parties to the proceedings. Any person wishing to become a party must file a motion to intervene. Copies of this filing are on file with the Commission and are available for public inspection in the Public Reference Room. This filing may be viewed on the web at http://www.ferc.fed.us/online/rims.htm (call (202) 208–2222 for assistance).

**Linwood A. Watson, Jr.,**

*Acting Secretary.*

[FR Doc. 99–22519 Filed 8–30–99; 8:45 am]

BILLING CODE 6717–01–M

---

## DEPARTMENT OF ENERGY

### Federal Energy Regulatory Commission

**[Docket No. RP99–436–001]**

### Texas Gas Transmission Corporation; Notice of Filing of Tariff Sheets

August 25, 1999.

Take notice that on August 20, 1999, Texas Gas Transmission Corporation (Texas Gas) tendered for filing, as part of its FERC Gas Tariff, First Revised Volume No. 1, the following tariff sheets to be effective August 1, 1999:

Fifth Revised Sheet No. 147
Fourth Revised Sheet No. 148

Texas Gas States that the purpose of this filing is to comply with Commission Letter Order dated August 6, 1999, in the above-referenced docket and in accordance with Order No. 587–K, final Rule issued on April 2, 1999, in Docket No. RM96–1–011.

Copies of the tariff sheets are being served upon Texas Gas's jurisdictional customers and interested state commissions, as well as those parties appearing on the service list for this docket.

Any person desiring to protest this filing should file a protest with the Federal Energy Regulatory Commission, 888 First Street, NE., Washington, DC 20426, in accordance with Section 385.211 of the Commission's Rules and Regulations. All such protests must be filed as provided in Section 154.210 of the Commission's Regulations. Protests will be considered by the Commission in determining the appropriate action to be taken, but will not serve to make protestants parties to the proceedings. Copies of this filing are on file with the Commission and are available for public inspection in the Public Reference Room. This filing may be viewed on the web at http://www.ferc.fed.us/online/rims.htm (call 202–208–2222 for assistance).

**Linwood A. Watson, Jr.,**

*Acting Secretary.*

[FR Doc. 99–22518 Filed 8–30–99; 8:45 am]

BILLING CODE 6717–01–M

---

## DEPARTMENT OF ENERGY

### Federal Energy Regulatory Commission

**[Docket No. RP99–475–000]**

### Texas Gas Transmission Corporation; Notice of Proposed Changes in FERC Gas Tariff

August 25, 1999.

Take notice that on August 20, 1999, Texas Gas Transmission Corporation (Texas Gas) tendered for filing as part of its FERC Gas Tariff, first Revised Volume No. 1, the following tariff sheets to become effective November 1, 1999:

Third Revised Sheet No. 193
Original Sheet No. 193A

The purpose of this filing pursuant to Section 4 of the Natural Gas Act is to revise Texas Gas' tariff to bring it into compliance with the policies of the Federal Energy Regulatory Commission (''Commission'') as stated in Tennessee Gas Pipeline Company, 86 FERC ¶ 61,290 (1999) by allowing both the releasing shipper who retains some capacity in a zone and the replacement shipper who acquires some capacity in a zone to have access to all secondary points in that zone and to eliminate abuses of Texas Gas' capacity release program that permit shippers to multiple their use of capacity in excess of their contract demand.

Copies of the revised tariff sheets are being mailed to Texas Gas's jurisdictional customers and interested state commissions.

Any person desiring to be heard or to protest said filing should file a motion to intervene or a protest with the Federal Energy Regulatory Commission, 888 First Street, NE, Washington, DC 20426, in accordance with Sections 385.214 or 385.211 of the Commission's Rules and Regulations. All such motions or protests must be filed in accordance with Section 154.210 of the Commission's Regulations. Protests will be considered by the Commission in determining the appropriate action to be taken, but will not serve to make protestants parties to the proceedings. Any person wishing to become a party must file a motion to intervene. Copies of this filing are on file with the Commission and are available for public inspection in the Public Reference Room. This filing may be viewed on the web at http://www.ferc.fed.us/online/rims.htm (call 202–208–2222 for assistance).

**Linwood A. Watson, Jr.,**

*Acting Secretary.*

[FR Doc. 99–22521 Filed 8–30–99; 8:45 am]

BILLING CODE 6717–01–M

---

## DEPARTMENT OF ENERGY

### Federal Energy Regulatory Commission

**[Docket No. RP97–408–009]**

### Trailblazer Pipeline Company; Notice of Compliance Filing

August 25, 1999.

Take notice that on August 20, 1999, Trailblazer Pipeline Company (Trailblazer) tendered for filing as part of its FERC Gas Tariff, Third Revised Volume No. 1, certain tariff sheets to be effective September 1, 1999.

Trailblazer states that the purpose of this filing is to implement base rates and tariff provisions reflected in its Amended Stipulation and Agreement (Settlement) in Docket No. RP97–408. The Federal Energy Regulatory Commission (Commission) approved the Settlement in its orders issued April 28, 1999 and August 3, 1999 as to Consenting parties. Trailblazer also states that it has provided rates to be charged to Consenting and Contesting parties to the Settlement.

Trailblazer requests waiver of the Commission's Regulations to the extent necessary to permit the tariff sheets submitted to become effective September 1, 1999.

Trailblazer states that copies of the filing are being mailed to its customers and interested state regulatory agencies.

Any person desiring to protest this filing should file a protest with the Federal Energy Regulatory Commission, 888 First Street, NE, Washington, DC 20426, in accordance with Section 385.211 of the Commission's Rules and Regulations. All such protests must be filed as provided in Section 154.210 of the Commission's Regulations. Protests will be considered by the Commission in determining the appropriate action to be taken, but will not serve to make protestants parties to the proceedings. Copies of this filing are on file with the Commission and are available for public inspection in the Public Reference Room. This filing may be viewed on the web at http://www.ferc.fed.us/online/

rims.htm (call 202–208–2222 for assistance).

**Linwood A. Watson, Jr.,**

*Acting Secretary.*

[FR Doc. 99–22517 Filed 8–30–99; 8:45 am]

BILLING CODE 6717–01–M

## DEPARTMENT OF ENERGY

## Federal Energy Regulatory Commission

**[Docket No. ER99–4118–000, et al.]**

## Virginia Electric and Power Company, et al.; Electric Rate and Corporate Regulation Filings

August 24, 1999.

Take notice that the following filings have been made with the Commission:

### 1. Virginia Electric and Power Company

[Docket No. ER99–4118–000]

Take notice that on August 18, 1999, Virginia Electric and Power Company (Virginia Power), tendered for filing the Service Agreement between Virginia Electric and Power Company and Southeastern Power Administration. Under the Service Agreement, Virginia Power will provide services to Southeastern Power Administration under the terms of the Company's Revised Market-Based Rate Tariff designated as FERC Electric Tariff (Second Revised Volume No. 4), which was accepted by order of the Commission dated August 13, 1998 in Docket No. ER98–3771–000.

Virginia Power requests an effective date of August 18, 1999.

Copies of the filing were served upon Southeastern Power Administration, the Virginia State Corporation Commission and the North Carolina Utilities Commission.

*Comment date:* September 7, 1999, in accordance with Standard Paragraph E at the end of this notice.

### 2. West Texas Utilities Company

[Docket No. ER99–4119–000]

Take notice that on August 18, 1999, West Texas Utilities Company (WTU) tendered for filing an Interconnection Agreement, dated June 19, 1998, between WTU and Texas Utilities Electric Company (TXU Electric) and the first Amendment, dated June 2, 1999, to the Interconnection Agreement. The two agreements provide for service from WTU to Big Country Electric Cooperative, Inc. (Big Country) at points of delivery on the TXU Electric System.

WTU seeks an effective date of June 24, 1998 for the Interconnection Agreement and of June 2, 1999 for the first Amendment. Accordingly, WTU seeks waiver of the Commission's notice requirements.

WTU served copies of the filing on TXU Electric, Big Country and the Public Utility Commission of Texas.

*Comment date:* September 7, 1999, in accordance with Standard Paragraph E at the end of this notice.

### 3. Atlantic City Electric Company

[Docket No. ER99–4120–000]

Take notice that on August 19, 1999, Atlantic City Electric Company (Atlantic), tendered for filing an unexecuted umbrella service agreement with Enron Power Marketing, Inc., under Atlantic's market rate sales tariff.

Atlantic requests an effective date of July 20, 1999.

*Comment date:* September 8, 1999, in accordance with Standard Paragraph E at the end of this notice.

### 4. Central Illinois Public Service Company, Union Electric Company and Ameren Generating Company

[Docket Nos. EC99–108–000 and ER99–4115–000

Take notice that on August 19, 1999, Central Illinois Public Service Company (CIPS), Union Electric Company and Ameren Generating Company (Genco) (Collectively, the Companies) filed an amendment to their August 17, 1999 filing in the above-referenced proceeding.

*Comment date:* September 20, 1999, in accordance with Standard Paragraph E at the end of this notice.

### 5. Mantua Creek Generating Company, L.P.

[Docket No. EG99–215–000]

Take notice that on August 20, 1999, Mantua Creek Generating Company, L.P. (Mantua Creek), a Delaware limited partnership with its principal place of business at 7500 Old Georgetown Road, Bethesda, MD 20814, filed with the Federal Energy Regulatory Commission an application for determination of exempt wholesale generator status pursuant to part 365 of the Commission's regulations.

Mantua Creek proposed to construct, own or lease, and to operate, a nominally rated 800 MW natural gas-fired, combined cycle power plant (the Eligible Facility) in the township of West Deptford, New Jersey and to sell electricity exclusively at wholesale. The proposed Eligible Facilities expected to commence commercial operation in the second quarter of 2002. All capacity, energy, and ancillary services from the Eligible Facility will be sold by Mantua Creek exclusively at wholesale.

*Comment date:* September 14, 1999, in accordance with Standard Paragraph E at the end of this notice. The Commission will limit its consideration of comments to those that concern the adequacy or accuracy of the application.

### 6. New York State Electric & Gas Corporation

[Docket No. EL99–86–000]

Take notice that on August 18, 1999, New York State Electric & Gas Corporation (NYSEG) submitted a Petition for Declaratory Order requesting that the Commission issue a declaration order disclaiming jurisdiction over standby service that is provided by NYSEG as a bundled retail service.

*Comment date:* September 17, 1999, in accordance with Standard Paragraph E at the end of this notice.

### 7. Business Discount Plan, Inc.

[Docket No. ER99–581–002]

Take notice that on August 5, 1999, the above-mentioned power marketer/or public utility tendered for filing its quarterly report with the Commission in above-referenced proceeding for information only. This filing is available for public inspection and copying in the Public Referenced Room or on the web at www.ferc.fed.us/online/rims.htm for viewing and downloading (call 202–208–2222 for assistance).

*Comment date:* September 3, 1999, in accordance with Standard Paragraph E at the end of this notice.

### 8. New England Power Company

[Docket No. ER99–2175–001]

Take notice that on August 12, 1999, New England Power Company (NEPOOL), tendered for filing information regarding Market Rule 15 actions for May 1999 in the above-referenced docket.

*Comment date:* September 7, 1999, in accordance with Standard Paragraph E at the end of this notice.

### 9. Entergy Services, Inc.

[Docket No. ER99–3867–000]

Take notice that on August 5, 1999, Entergy Services, Inc., tendered for filing corrected version of the quarterly report for short-term transactions for the second quarter of 1999 originally filed with the Commission on July 30, 1999.

*Comment date:* September 3, 1999, in accordance with Standard Paragraph E at the end of this notice.

### 10. Cleco Utility Group, Inc.

[Docket No. ER99–4116–000]

Take notice that on August 18, 1999, Cleco Utility Group, Inc. (Cleco),

tendered for filing a service agreement under which Cleco will make market based power sales under its MR–1 tariff with the Enserch Energy Services, Inc.

Cleco states that a copy of the filing has been served on the Enserch Energy Services, Inc.

*Comment date:* September 7, 1999, in accordance with Standard Paragraph E at the end of this notice.

**11. Indianapolis Power & Light Company**

[Docket No. ER99–4117–000]

Take notice that on August 18, 1999, Indianapolis Power & Light Company (IPL), tendered for filing an interchange agreement, dated August 17, 1999, between IPL and Aquila Energy Marketing Corporation (Aquila Energy).

Copies of this filing were served on Aquila Energy, the Missouri Public Service Commission and the Indiana Utility Regulatory Commission.

*Comment date:* September 7, 1999, in accordance with Standard Paragraph E at the end of this notice.

**12. Delmarva Power & Light Company**

[Docket No. ER99–4121–000]

Take notice that on August 19, 1999, Delmarva Power & Light Company (Delmarva), tendered for filing an unexecuted umbrella service agreement with Constellation Power Source, Inc., under Delmarva's market rate sales tariff.

Delmarva requests an effective date of July 23, 1999.

*Comment date:* September 8, 1999, in accordance with Standard Paragraph E at the end of this notice.

**13. APS Energy Services Company, Inc.**

[Docket No. ER99–4122–000]

Take notice that on August 19, 1999, APS Energy Services Company, Inc. (APSES), tendered for filing an application for an order authorizing it to make wholesale sales of electric power at market-based rates and approving the Code of Conduct governing its relationship with its affiliated public utility.

*Comment date:* September 8, 1999, in accordance with Standard Paragraph E at the end of this notice.

**14. PJM Interconnection, L.L.C.**

[Docket No. ER99–4123–000]

Take notice that on August 19, 1999, PJM Interconnection, L.L.C. (PJM), tendered for filing 7 executed service agreements for transmission service under the PJM Open Access Transmission Tariff. The agreements are as follows: 3 umbrella agreements for firm point-to-point transmission service agreements with AES Power Direct, L.L.C., Central Hudson Enterprises Corp., and NRG Power Marketing, Inc.; 2 umbrella non-firm point-to-point transmission service agreements with AES Power Direct, L.L.C., and NRG Power Marketing, Inc.; and 2 umbrella agreement for network integration transmission service under state required retail access programs with AES Power Direct, L.L.C. and NRG Power Marketing, Inc.

Copies of this filing were served upon the parties to the service agreements.

*Comment date:* September 8, 1999, in accordance with Standard Paragraph E at the end of this notice.

**15. Arizona Public Service Company**

[Docket No. ER99–4124–000]

Take notice that on August 19, 1999, Arizona Public Service Company (APS), tendered for filing an application for an order accepting its revised Market Rate Tariff and approving the Code of Conduct governing APS' relationship with its affiliate.

Copies of this filing have been served upon customers taking service under APS' Market Rate Tariff and the Arizona Corporation Commission.

*Comment date:* September 8, 1999, in accordance with Standard Paragraph E at the end of this notice.

**16. Cinergy Services, Inc.**

[Docket No. ER99–4125–000]

Take notice that on August 19, 1999, Cinergy Services, Inc., on behalf of its Operating Company affiliates, The Cincinnati Gas & Electric Company and PSI Energy, Inc. (COC), tendered for filing an executed service agreement between COC and Griffin Energy Marketing, L.L.C. (Griffin) replacing the unexecuted service agreement filed on April 16, 1999 under Docket No. ER99–2511–000 per COC FERC Electric Market-Based Power Sales Tariff, Original Volume No. 7–MB.

Cinergy is requesting an effective date of May 1, 1999 and the same Rate Designation as per the original filing.

*Comment date:* September 8, 1999, in accordance with Standard Paragraph E at the end of this notice.

**17. Georgia Natural Gas Company**

[Docket No. ER99–4126–000]

Take notice that on August 19, 1999, Atlanta Gas Light Services, Inc., tendered for filing notice of name change in accordance with the provisions of 18 CFR 35.16 and 131.51, advising the Commission that effective April 30, 1999, Atlanta Gas Light Services, Inc., has legally changed its name to Georgia Natural Gas Company. Georgia Natural Gas Company adopts, ratifies, and makes its own, in every respect all applicable rate schedules, and supplements thereto, listed below, heretofore filed with the Federal Energy Regulatory Commission by Atlanta Gas Light Services, Inc., effective April 30, 1999:

Atlanta Gas Light Services, Inc.
Rate Schedule FERC No. 1

Georgia Natural Gas Company's filing is available for public inspection at its offices in Atlanta, Georgia.

*Comment date:* September 8, 1999, in accordance with Standard Paragraph E at the end of this notice.

**18. Sithe Power Marketing, L.P.**

[Docket No. ER99–4130–000]

Take notice that on August 19, 1999, Sithe Power Marketing, L.P., petitioned the Commission for acceptance of its proposed revised FERC Rate Schedule No. 2. Applicant requests certain authority to make sales of ancillary services at market-based rates, requests certain blanket authorizations, and waiver of certain of the Commission's Regulations.

*Comment date:* September 8, 1999, in accordance with Standard Paragraph E at the end of this notice.

**19. Allegheny Power Service Corporation, on behalf of Monongahela Power Company, The Potomac Edison Company, and West Penn Power Company (Allegheny Power)**

[Docket No. ER99–4131–000]

Take notice that on August 19, 1999, Allegheny Power Service Corporation on behalf of Monongahela Power Company, The Potomac Edison Company and West Penn Power Company (Allegheny Power), tendered for filing Supplement No. 60 to add Louisville Gas and Electric Company/Kentucky Utilities Company to Allegheny Power Open Access Transmission Service Tariff which has been accepted for filing by the Federal Energy Regulatory Commission in Docket No. ER96–58–000.

The proposed effective date under the Service Agreement is August 18, 1999.

Copies of the filing have been provided to the Public Utilities Commission of Ohio, the Pennsylvania Public Utility Commission, the Maryland Public Service Commission, the Virginia State Corporation Commission, and the West Virginia Public Service Commission.

*Comment date:* September 8, 1999, in accordance with Standard Paragraph E at the end of this notice.

**20. Allegheny Power Service Corporation, on behalf of Monongahela Power Company, The Potomac Edison Company and West Penn Power Company (Allegheny Power)**

[Docket No. ER99–4132–000]

Take notice that on August 19, 1999, Allegheny Power Service Corporation on behalf of Monongahela Power Company, The Potomac Edison Company and West Penn Power Company (Allegheny Power) tendered for filing Supplement No. 33 to add one (1) new Customer to the Market Rate Tariff under which Allegheny Power offers generation services.

Allegheny Power requests a waiver of notice requirements to make service available as of July 22, 1999, to Horizon Energy Company, d/b/a Exelon Energy.

Copies of the filing have been provided to the Public Utilities Commission of Ohio, the Pennsylvania Public Utility Commission, the Maryland Public Service Commission, the Virginia State Corporation Commission, the West Virginia Public Service Commission, and all parties of record.

*Comment date:* September 8, 1999, in accordance with Standard Paragraph E at the end of this notice.

**21. Astoria Generating Company, L.P.**

[Docket No. ER99–4133–000]

Take notice that on August 18, 1999, Astoria Generating Company, L.P. (Applicant), with its principal office at c/o Orion Power Holdings, Inc., 7 E. Redwood Street, 10th Floor, Baltimore, Maryland 21202, tendered for filing with the Federal Energy Regulatory Commission (Commission) long-term service agreements for the sale of energy and capacity under its market-based rate tariff, FERC Electric Rate Tariff, Original Volume No. 1.

*Comment date:* September 7, 1999, in accordance with Standard Paragraph E at the end of this notice.

**22. Southern California Edison Company**

[Docket No. ER99–4134–000]

Take notice that on August 19, 1999, Southern California Edison Company (SCE), tendered for filing the Second Amendment to the District-Edison 1987 Service and Interchange Agreement (Second Amendment) between The Metropolitan Water District (MWD) of Southern California and SCE.

The Second Amendment revises the termination date of existing arrangements between SCE and MWD to provide a methodology for pricing Edison Purchased Power and valuing Exchange Energy based upon the California Power Exchange's market clearing price.

Copies of this filing were served upon the Public Utilities Commission of the State of California and all interested parties.

*Comment date:* September 8, 1999, in accordance with Standard Paragraph E at the end of this notice.

**23. Cinergy Services, Inc.**

[Docket No. ER99–4135–000]

Take notice that on August 19, 1999, Cinergy Services, Inc. (Cinergy) and Reliant Energy Services, Inc. (Reliant), are requesting via a Notice of Assignment that Reliant will replace NorAm Energy Services, Inc., of Cinergy's Market-Based Power Sales Tariff Original Volume No. 7–MB, Service Agreement No. 76, dated October 25, 1997.

Cinergy and Reliant are requesting an effective date of February 2, 1999.

*Comment date:* September 8, 1999, in accordance with Standard Paragraph E at the end of this notice.

**24. Avista Corporation**

[Docket No. ER99–4136–000]

Take notice that on August 19, 1999, Avista Corporation (AVA), tendered for filing with the Federal Energy Regulatory Commission pursuant to 18 CFR 35.13, an executed Mutual Netting Agreement allowing for arrangements of amounts which become due and owing to one Party to be set off against amounts which are due and owing to the other Party with Benton County PUD.

Avista Corporation requests waiver of the prior notice requirement and requests an effective date of July 1, 1999.

*Comment date:* September 8, 1999, in accordance with Standard Paragraph E at the end of this notice.

**25. Cinergy Services, Inc.**

[Docket No. ER99–4137–000]

Take notice that on August 19, 1999, Cinergy Services, Inc. (Cinergy) and Reliant Energy Services, Inc. (Reliant), tendered for filing Notice of Assignment that Reliant will replace NorAm Energy Services, Inc., of Cinergy's Cost-Based Power Sales Tariff Original Volume No. 6–CB, Service Agreement No. 76, dated October 25, 1997.

Cinergy and Reliant are requesting an effective date of February 2, 1999.

*Comment date:* September 8, 1999, in accordance with Standard Paragraph E at the end of this notice.

**26. UtiliCorp United Inc.**

[Docket No. ER99–4138–000]

Take notice that on August 19, 1999, UtiliCorp United Inc., tendered for filing, a Service Agreement under its Market-Based Power Sales Tariff, FERC Electric Tariff Original Volume No. 28, with Tennessee Valley Authority. The Service Agreement provides for the sale of capacity and energy by UtiliCorp United Inc., to Tennessee Valley Authority pursuant to the tariff.

UtiliCorp requests waiver of the Commission's regulations to permit the Service Agreement to become effective in accordance with its terms.

*Comment date:* September 8, 1999, in accordance with Standard Paragraph E at the end of this notice.

**27. MidAmerican Energy Company**

[Docket No. ER99–4139–000]

Take notice that on August 19, 1999, MidAmerican Energy Company (MidAmerican), 666 Grand Avenue, Des Moines, Iowa 50309, tendered for filing with the Commission a Firm Transmission Service Agreement with Minnesota Municipal Power Agency (Minnesota Municipal), dated August 4, 1999, and a Non-Firm Transmission Service Agreement with Minnesota Municipal, dated August 4, 1999, entered into pursuant to MidAmerican's Open Access Transmission Tariff.

MidAmerican requests an effective date of August 4, 1999, for the Agreements with Minnesota Municipal and accordingly seeks a waiver of the Commission's notice requirement.

*Comment date:* September 8, 1999, in accordance with Standard Paragraph E at the end of this notice.

**28. Cinergy Services, Inc. and Reliant Energy Services, Inc.**

[Docket No. ER99–4140–000]

Take notice that on August 19 1999, Cinergy Services, Inc. (Cinergy) and Reliant Energy Services, Inc. (Reliant), tendered for filing Notice of Assignment that Reliant will replace NorAm Energy Services, Inc., of Cinergy's Interchange Agreement Rate Schedule No. 3.

Cinergy and Reliant are requesting an effective date of February 2, 1999.

*Comment date:* September 8, 1999, in accordance with Standard Paragraph E at the end of this notice.

**29. Entergy Services, Inc.**

[Docket No. ER99–4141–000]

Take notice that on August 19, 1999, Entergy Services, Inc., on behalf of Entergy Arkansas, Inc., Entergy Gulf States, Inc., Entergy Louisiana, Inc., Entergy Mississippi, Inc., and Entergy New Orleans, Inc., (collectively, the

Entergy Operating Companies) tendered for filing a Non-Firm Point-to-Point Transmission Service Agreement and a Short-Term Firm Point-to-Point Transportation Agreement both between Entergy Services, Inc. as agent for the Entergy Operating Companies, and Scana Energy Marketing, Inc.

*Comment date:* September 8, 1999, in accordance with Standard Paragraph E at the end of this notice.

**30. Virginia Electric and Power Company**

[Docket No. ER99–4142–000]

Take notice that on August 19, 1999, Virginia Electric and Power Company, d/b/a North Carolina Power, tendered for filing a letter agreement supplementing Rate Schedules 102, 114 and 115 of North Carolina Power for service to the Town of Belhaven, North Carolina (Town), a member municipality of the North Carolina Municipal Power Agency Number 3 of the North Carolina Eastern Municipal Power Agency (Power Agency). The letter agreement dated June 18, 1999, establishes the terms and conditions for temporary modification of the substation and the permanent modification of metering facilities leased by the Power agency for the Town in conjunction with the Town's upgrade of its own electric system.

Copies of the filing were served upon the Power Agency, the North Carolina Utilities Commission and the Virginia State Corporation Commission.

*Comment date:* September 8, 1999, in accordance with Standard Paragraph E at the end of this notice.

**31. Nevada Power Company**

[Docket No. ER99–4143–000]

Take notice that on August 19, 1999, Nevada Power Company (NPC), tended for filing Service Agreement to provide Non-Firm Point-to-Point Transmission Service under NPC's (Transmission Provider) Open Access Transmission Tariff with Electric Clearinghouse, Inc., (Transmission Customer).

A copy of this filing has been served on Electric Clearinghouse, Inc. (Transmission Customer) and the Nevada Public Service Commission.

*Comment date:* September 8, 1999, in accordance with Standard Paragraph E at the end of this notice.

**32. Jersey Central Power & Light Company**

[Docket No. ER99–4144–000]

Take notice that on August 19, 1999, Jersey Central Power & Light Company d/b/a/ GPU Energy (Jersey Central), tendered for filing an amendment to an Interconnection Agreement between Jersey Central and Atlantic City Electric Company. The amendment revises a component of the rate for service under the Interconnection Agreement relating to Jersey Central's O&M expense for 1999.

*Comment date:* September 8, 1999, in accordance with Standard Paragraph E at the end of this notice.

**33. Dayton Power and Light Company**

[Docket No. ER99–4145–000]

Take notice that on August 19, 1999, Dayton Power and Light Company (Dayton), tendered for filing service agreements establishing Citizens Power Sales and El Paso Power Services Company as a customer under the terms of Dayton's Market-Based Sales Tariff.

Dayton requests an effective date of one day subsequent to this filing for the service agreements. Accordingly, Dayton requests waiver of the Commission's notice requirements.

Copies of this filing were served upon Citizens Power Sales and El Paso Power Services Company and the Public Utilities Commission of Ohio.

*Comment date:* September 8, 1999, in accordance with Standard Paragraph E at the end of this notice.

**34. Southern Company Services, Inc.**

[Docket No. ER99–4165–000]

Take notice that on August 19, 1999, Southern Company Services, Inc. (SCS), acting on behalf of Alabama Power Company, Georgia Power Company, Gulf Power Company, Mississippi Power Company, and Savannah Electric and Power Company (collectively referred to as Southern Company), tendered for filing four (4) service agreements for firm point-to-point transmission service between SCS, as agent for Southern Company, and (i) Constellation Power Source, Inc. (Constellation), (ii) Coral Energy L.P., (iii) Southern Company Energy Marketing L.P. and (iv) Tenaska Power Services, Co. and two (2) service agreement for non-firm point-to-point transmission service between SCS, as agent for Southern Company, and (i) Constellation and (ii) West Penn Power Company d/b/a Allegheny Energy under the Open Access Transmission Tariff of Southern Company (FERC Electric Tariff, Original Volume No. 5).

*Comment date:* September 8, 1999, in accordance with Standard Paragraph E at the end of this notice.

**Standard Paragraphs**

E. Any person desiring to be heard or to protest such filing should file a motion to intervene or protest with the Federal Energy Regulatory Commission, 888 First Street, NE, Washington, DC 20426, in accordance with Rules 211 and 214 of the Commission's Rules of Practice and Procedure (18 CFR 385.211 and 385.214). All such motions or protests should be filed on or before the comment date. Protests will be considered by the Commission in determining the appropriate action to be taken, but will not serve to make protestants parties to the proceeding. Any person wishing to become a party must file a motion to intervene. Copies of these filings are on file with the Commission and are available for public inspection. This filing may also be viewed on the Internet at http://www.ferc.fed.us/online/rims.htm (call 202–208–2222 for assistance).

**Linwood A. Watson, Jr.,**

*Acting Secretary.*

[FR Doc. 99–22514 Filed 8–30–99; 8:45 am]

BILLING CODE 6717–01–P

---

## DEPARTMENT OF ENERGY

### Federal Energy Regulatory Commission

**[Docket No. CP99–522–000]**

### Transwestern Pipeline Company; Notice of Availability of the Environmental Assessment For The Proposed Gallup Expansion Project

August 25, 1999.

The staff of the Federal Energy Regulatory Commission (FERC or Commission) has prepared an environmental assessment (EA) on the natural gas pipeline facilities proposed by Transwestern Pipeline Company (Transwestern) in the above-referenced docket.

The EA was prepared to satisfy the requirements of the National Environmental Policy Act. The staff concludes that approval of the proposed project, with appropriate mitigating measures, would not constitute a major Federal action significantly affecting the quality of the human environment.

The EA assesses the potential environmental effects of the construction and operation of the proposed Gallup Expansion project. Transwestern proposes to construct and operate a new 10,000-horsepower electric motor-driven Gallup Compressor Station near the interconnect between its mainline and San Juan Lateral in McKinley County, New Mexico. Transwestern also proposes to install gas coolers at its Bloomfield and LaPlata ''A'' Compressor Stations on its San Juan Lateral in San Juan County, New Mexico and LaPlata County, Colorado, respectively.

The proposed facilities would create incremental firm capacity of approximately 50,000 cubic feet per day (Mcfd) on the San Juan Lateral downstream of the Bloomfield Compressor Station. The project would also allow Transwestern to operate its mainline facilities at their certificated capacity of 1,090,000 Mcfd on a firm basis. The primary purpose of installing the gas coolers is to reduce the temperature of the gas flowing within the pipeline and protect the integrity of the pipeline coating. As a result of the reduced gas temperatures, the pipeline and associated downstream compression would operate more efficiently, creating additional incremental firm capacity on the San Juan Lateral.

The EA has been placed in the public files of the FERC. A limited number of copies of the EA are available for distribution and public inspection at: Federal Energy Regulatory Commission, Public Reference and Files Maintenance Branch, 888 First Street, NE, Room 2A, Washington, DC 20426, (202) 208–1371.

Copies of the EA have been mailed to Federal, state and local agencies, public interest groups, interested individuals, newspapers, and parties to this proceeding.

Any person wishing to comment on the EA may do so. To ensure consideration prior to a Commission decision on the proposal, it is important that we receive your comments before the date specified below. Please carefully follow these instructions to ensure that your comments are received in time and properly recorded:

- Send two copies of your comments to: Secretary, Federal Energy Regulatory Commission, 888 First St., NE, Room 1A, Washington, DC 20426;
- Label one copy of the comments for the attention of the Environmental Review and Compliance Branch, PR–11.1
- Reference Docket No. CP99–522–000; and
- Mail your comments so that they will be received in Washington, DC on or before September 24, 1999.

Comments will be considered by the Commission but will not serve to make the commenter a party to the proceeding. Any person seeking to become a party to the proceeding must file a motion to intervene pursuant to Rule 214 of the Commission's Rules of Practice and procedures (18 CFR 285.214).

The date for filing timely motions to intervene in this proceeding has passed. Therefore, parties now seeking to file late interventions must show good cause, as required by section 385.214(b)(3), why this time limitation should be waived. Environmental issues have been viewed as good cause for late intervention. You do not need intervenor status to have your comments considered.

Additional information about the proposed project is available from Paul McKee in the Commission's Office of External Affairs, at (202) 208–1088 or on the FERC Internet website (www.ferc.fed.us) using the ''RIMS'' link to information in this docket number. Click on the ''RIMS'' link, select ''Docket #'' from the RIMS Menu, and follow the instructions. For assistance with access to RIMS, the RIMS helpline can be reached at (202) 208–2222.

Similarly, the ''CIPS'' link on the FERC Internet website provides access to the texts of formal documents issued by the Commission, such as orders, notices, and rulemakings. From the FERC Internet website, click on the ''CIPS'' link, select ''Docket #'' from the CIPS menu, and follow the instructions. For assistance with access to CIPS, the CIPS helpline can be reached at (202) 208–2474.

**Linwood A. Watson, Jr.,**

*Acting Secretary.*

[FR Doc. 99–22515 Filed 8–30–99; 8:45 am]

BILLING CODE 6717–01–M

---

## DEPARTMENT OF ENERGY

## Federal Energy Regulatory Commission

## Notice of an Amendment of Application for an Amendment of Exemption and Soliciting Comments Motions to Intervene, and Protests

August 25, 1999.

Take notice that the following hydroelectric application has been filed with the Commission and is available for public inspection:

a. *Application Type:* Amendment of Application for Amendment of Exemption.

b. *Project No.:* 2869–007.

c. *Date Filed:* January 4, 1999.

d. *Applicant:* Village of Postdam.

e. *Name of Project:* Postsdam Water Power Project.

f. *Location:* On the Raquette River in St. Lawrence County, New York.

g. *Filed Pursuant to:* 18 CFR 4.104.

h. *Applicant Contact:* Frank O. Christie, Christie Engineering, 8 East Main St., Malone, NY 12953, (518) 483–1945.

i. *FERC Contact:* Any questions on this notice should be addressed to Mohamad Fayyad at mohamad.fayyad@ferc.fed.us or 202–219–2665.

j. *Deadline for filing comments and/or motions:* October 8, 1999.

All documents (original and eight copies) should be filed with: David P. Boergers, Secretary, Federal Energy Regulatory Commission, 888 First Street, NE, Washington, DC 20426.

Please include the project number (2869–007) on any comments filed.

k. *Description of Filing:* On November 16, 1998, the Commission issued a Notice of Amendment of Exemption for the Postdam Water Power Project, FERC No. 2869. The Notice described the filing by stating that the exemptee is proposing to add a new powerhouse at the site. The existing project consists of the East Dam and West Dam separated by an island, a 300-acre reservoir, and an 800-kW powerhouse at the East Dam. The proposed powerhouse would consist of an intake and powerhouse at the West Dam with a capacity of 700 kW.

On January 4, 1999, the exemptee filed additional information that included a discussion of comments received from the U.S. Fish and Wildlife and the New York State Department of Environmental Conservation. To alleviate the concerns of those agencies about changes in the pond level, the exemptee is proposing to install a small inflatable rubber dam on top of the crest of the spillway. The rubber dam would be about 9-inch-high when inflated. The purpose of the rubber dam would be to maintain approximately the same impoundment level that currently exists, during the operation of the proposed powerhouse.

l. *Locations of the application:* A copy of the application is available for inspection and reproduction at the Commission's Public Reference Room, located at 888 First Street, NE, Room 2A, Washington, DC 20426, or by calling (202) 208–1371. The application may be viewed on the web at http://www.ferc.fed.us/online/rims.htm, (call (202) 208–2222 for assistance). A copy is also available for inspection and reproduction at the address in item ''h'' above.

m. Individuals desiring to be included on the Commission's mailing list should so indicate by writing to the Secretary of the Commission.

Comments, Protests, or Motions to Intervene—Anyone may submit comments, a protest, or a motion to intervene in accordance with the requirements of Rules of Practice and Procedure, 18 CFR 385.210, .211, .214. In determining the appropriate action to take, the Commission will consider all protests or other comments filed, but

only those who file a motion to intervene in accordance with the Commission's Rules may become a party to the proceeding. Any comments, protests, or motions to intervene must be received on or before the specified comment date for the particular application.

Filing and Service of Responsive Documents—Any filings must bear in all capital letters the title ''COMMENTS'', ''RECOMMENDATIONS FOR TERMS AND CONDITIONS'', ''PROTEST'', OR ''MOTION TO INTERVENE'', as applicable, and the Project Number of the particular application to which the filing refers. Any of the above-named documents must be filed by providing the original and the number of copies provided by the Commission's regulations to: The Secretary, Federal Energy Regulatory Commission, 888 First Street, NE, Washington, DC 20426. A copy of any motion to intervene must also be served upon each representative of the Applicant specified in the particular application.

Agency Comments—Federal, state, and local agencies are invited to file comments on the described application. A copy of the application may be obtained by agencies directly from the Applicant. If an agency does not file comments within the time specified for filing comments, it will be presumed to have no comments. One copy of an agency's comments must also be sent to the Applicant's representatives.

**Linwood A. Watson, Jr.,**

*Acting Secretary.*

[FR Doc 99–22516 Filed 8–30–99; 8:45 am]

BILLING CODE 6717–01–M

## ENVIRONMENTAL PROTECTION AGENCY

**[FRL–6431–1]**

### National Environmental Justice Advisory Council; Notice of Charter Renewal

**AGENCY:** Environmental Protection Agency (EPA).

**ACTION:** Notice of charter renewal.

The Charter for the Environmental Protection Agency's National Environmental Justice Advisory Council (NEJAC) will be renewed for an additional two-year period, as a necessary committee which is in the public interest, in accordance with the provisions of the Federal Advisory Committee Act (FACA), 5 U.S.C. App. II section 9(c). The purpose of NEJAC is to provide advice and consensus recommendations to the Administrator of EPA on issues associated with integrating environmental justice concerns into EPA's outreach activities, public policies, science, regulatory, enforcement, and compliance decisions.

It is determined that NEJAC is in the public interest in connection with the performance of duties imposed on the Agency by law.

Inquiries may be directed to Charles Lee, Designated Federal Officer, NEJAC, U.S. EPA, (mail code 2201A), 401 M Street, SW, Washington, D.C. 20460.

Dated: July 8, 1999.

**Sylvia K. Lowrance,**

*Deputy Assistant Administrator, Office of Enforcement and Compliance Assurance.*

[FR Doc. 99–22631 Filed 8–30–99; 8:45 am]

BILLING CODE 6560–50–P

## OFFICE OF SCIENCE AND TECHNOLOGY POLICY

### Meeting of the President's Committee of Advisors on Science and Technology

**AGENCY:** Office of Science and Technology Policy.

**ACTION:** Notice of meeting.

**SUMMARY:** This notice sets forth the schedule and summary agenda for a meeting of the President's Committee of Advisors on Science and Technology (PCAST), and describes the functions of the Committee. Notice of this meeting is required under the Federal Advisory Committee Act.

**DATES AND PLACE:** September 16, 1999, Washington, DC. This meeting will take place in the Truman Room (Third Floor) of the White House Conference Center, 726 Jackson Place, NW, Washington, DC.

**TYPE OF MEETING:** Open.

**PROPOSED SCHEDULE AND AGENDA:** The President's Committee of Advisors on Science and Technology (PCAST) is tentatively scheduled to meet in open session on Thursday, September 16, 1999, at approximately 12:30 p.m., to discuss (1) the Science and Technology Budget for FY2000; (2) the work of the PCAST panels. This session will end at approximately 2:00 p.m.

**PUBLIC COMMENTS:** There will be a time allocated for the public to speak on any of the above agenda items. Please make your request for the opportunity to make a public comment five (5) days in advance of the meeting. Written comments are welcome any time prior to or following the meeting. Please notify Joan P. Porter, PCAST Executive Secretary, at (202) 456–6101 or fax your requests/comments to (202) 456–6026.

**FOR FURTHER INFORMATION CONTACT:** For information regarding time, place, and agenda, please call Joan P. Porter, PCAST Executive Secretary, at (202) 456–6101, prior to 3:00 p.m. on Tuesday, September 14, 1999. Information may also be available at the PCAST website at http://www.whitehouse.gov/WH/EOP/PCAST/html/PCAST—home.html. Please note that public seating for this meeting is limited, and is available on a first-come first served basis.

**SUPPLEMENTARY INFORMATION:** The President's Committee of Advisors on Science and Technology was established by Executive Order 12882, as amended, on November 23, 1993. The purpose of PCAST is to advise the President on matters of national importance that have significant science and technology content, and to assist the President's National Science and Technology Council in securing private sector participation in its activities. The Committee members are distinguished individuals appointed by the President from non-Federal sectors. The PCAST is co-chaired by the Assistant to the President for Science and Technology and, by John Young, former President and CEO of the Hewlett-Packard Company.

**Barbara Ann Ferguson,**

*Assistant Director, Budget and Administration, Office of Science and Technology Policy.*

[FR Doc. 99–22543 Filed 8–30–99; 8:45 am]

BILLING CODE 3170–01–P

## FEDERAL COMMUNICATIONS COMMISSION

**[DA 99–1473]**

### Public Safety National Coordination Committee

**AGENCY:** Federal Communications Commission.

**ACTION:** Notice.

**SUMMARY:** This document advises interested persons of a meeting of the Public Safety National Coordination Committee (''NCC''), which will be held at The Holiday Inn—Lansing West Conference Center, Lansing, Michigan. The Federal Advisory Committee Act, Public Law 92–463, as amended, requires public notice of all meetings of the NCC. This notice advises interested persons of the third meeting of the Public Safety National Coordination Committee.

**DATES:** September 24, 1999 at 1:30 p.m.–5:00 p.m.

**ADDRESSES:** The Holiday Inn—Lansing West Conference Center, 7501 W. Saginaw Highway, Lansing, Michigan 48917.

**FOR FURTHER INFORMATION CONTACT:** Designated Federal Officer, Michael J. Wilhelm, (202) 418–0680, e-mail mwilhelm@fcc.gov. Press Contact, Meribeth McCarrick, Wireless Telecommunications Bureau, 202–418–0600, or e-mail mmccarri@fcc.gov.

**SUPPLEMENTARY INFORMATION:** Following is the complete text of the Public Notice:

This Public Notice advises interested persons of a meeting of the Public Safety National Coordination Committee (''NCC''), which will be held in Lansing, Michigan. The Federal Advisory Committee Act, Public Law 92–463, as amended, requires public notice of all meetings of the NCC. This notice advises interested persons of the third meeting of the Public Safety National Coordination Committee.

*Date:* September 24, 1999.

*Meeting Time:* General Membership Meeting—1:30 p.m.–5 p.m.

*Address:* The Holiday Inn—Lansing West Conference Center, 7501 W. Saginaw Highway, Lansing, Michigan 48917.

The NCC Subcommittees will meet from 10 a.m. to 12 noon, continuing from the previous day; the NCC General Membership Meeting will commence at 1:30 p.m. and continue until 5 p.m. The agenda for the NCC membership meeting is as follows:

1. Introduction and Welcoming Remarks
2. Approval of Agenda
3. Other Administrative Matters
4. Report from the Interoperability Subcommittee
5. Report from the Technology Subcommittee
6. Report from the Implementation Subcommittee
7. Public Discussion
8. Other Business
9. Upcoming Meeting Dates and Locations
10. Closing Remarks

The FCC has established the Public Safety National Coordination Committee, pursuant to the provisions of the Federal Advisory Committee Act, to advise the Commission on a variety of issues relating to the use of the 24 MHz of spectrum in the 764–776/794–806 MHz frequency bands (collectively, the 700 MHz band) that has been allocated to public safety services. See The Development of Operational, Technical and Spectrum Requirements For Meeting Federal, State and Local Public Safety Agency Communications Requirements Through the Year 2010 and Establishment of Rules and Requirements For Priority Access Service, WT Docket No. 96–86, *First Report and Order and Third Notice of Proposed Rulemaking,* FCC 98–191 (1998). 63 FR 58645 (November 2, 1998)

The NCC has an open membership. Previous expressions of interest in membership have been received in response to several Public Notices inviting interested persons to become members and to participate in the NCC's processes. All persons who have previously identified themselves or have been designated as a representative of an organization are deemed members and are invited to attend. All other interested parties are hereby invited to attend and to participate in the NCC processes and its meetings and to become members of the Committee. This policy will ensure balanced participation. Members of the general public may attend the meeting. To attend the third meeting of the Public Safety National Coordination Committee, please RSVP to Joy Alford or Bertram Weintraub of the Policy and Rules Branch of the Public Safety and Private Wireless Division, Wireless Telecommunications Bureau of the FCC by calling (202) 418–0680, by faxing (202) 418–2643, or by e-mailing at jalford@fcc.gov or bweintra@fcc.gov. Please provide your name, the organization you represent, your phone number, fax number and email address. This RSVP is for the purpose of determining the number of people who will attend this third meeting. The FCC will attempt to accommodate as many people as possible. However, admittance will be limited to the seating available. The public may submit written comments to the NCC's Designated Federal Officer before the meeting.

Additional information about the NCC and NCC-related matters can be found on the NCC website located at: http://www.fcc.gov/wtb/publicsafety/ncc.html.

Federal Communications Commission.

**Herb Zeiler,**

*Deputy Chief, Public Safety and Private Wireless Division, Wireless Telecommunications Bureau.*

[FR Doc. 99–22507 Filed 8–30–99; 8:45 am]

BILLING CODE 6712–01–P

## FEDERAL EMERGENCY MANAGEMENT AGENCY

**[FEMA–1282–DR]**

### Iowa; Amendment No. 6 to Notice of a Major Disaster Declaration

**AGENCY:** Federal Emergency Management Agency (FEMA).

**ACTION:** Notice.

**SUMMARY:** This notice amends the notice of a major disaster for the State of Iowa, (FEMA–1282–DR), dated July 22, 1999, and related determinations.

**EFFECTIVE DATE:** August 17, 1999.

**FOR FURTHER INFORMATION CONTACT:** Madge Dale, Response and Recovery Directorate, Federal Emergency Management Agency, Washington, DC 20472, (202) 646–3772.

**SUPPLEMENTARY INFORMATION:** The notice of a major disaster for the State of Iowa is hereby amended to include the following areas among those areas determined to have been adversely affected by the catastrophe declared a major disaster by the President in his declaration of July 22, 1999:

Harrison, Mills, and Pottawattamie Counties for Public Assistance (already designated for Individual Assistance).

Montgomery County for Public Assistance.

(The following Catalog of Federal Domestic Assistance Numbers (CFDA) are to be used for reporting and drawing funds: 83.537, Community Disaster Loans; 83.538, Cora Brown Fund Program; 83.539, Crisis Counseling; 83.540, Disaster Legal Services Program; 83.541, Disaster Unemployment Assistance (DUA); 83.542, Fire Suppression Assistance; 83.543, Individual and Family Grant (IFG) Program; 83.544, Public Assistance Grants; 83.545, Disaster Housing Program; 83.548, Hazard Mitigation Grant Program.)

**James L. Witt,**

*Director.*

[FR Doc. 99–22512 Filed 8–30–99; 8:45 am]

BILLING CODE 6718–02–P

## FEDERAL EMERGENCY MANAGEMENT AGENCY

**[FEMA–1282–DR]**

### Iowa; Amendment No. 4 to Notice of a Major Disaster Declaration

**AGENCY:** Federal Emergency Management Agency (FEMA).

**ACTION:** Notice.

**SUMMARY:** This notice amends the notice of a major disaster for the State of Iowa, (FEMA–1282–DR), dated July 22, 1999, and related determinations.

**EFFECTIVE DATE:** August 13, 1999.

**FOR FURTHER INFORMATION CONTACT:** Madge Dale, Response and Recovery

Directorate, Federal Emergency Management Agency, Washington, DC 20472, (202) 646–3772.

**SUPPLEMENTARY INFORMATION:** The notice of a major disaster for the State of Iowa is hereby amended to include the following areas among those areas determined to have been adversely affected by the catastrophe declared a major disaster by the President in his declaration of July 22, 1999:

Harrison and Mills Counties for Individual Assistance.

(The following Catalog of Federal Domestic Assistance Numbers (CFDA) are to be used for reporting and drawing funds: 83.537, Community Disaster Loans; 83.538, Cora Brown Fund Program; 83.539, Crisis Counseling; 83.540, Disaster Legal Services Program; 83.541, Disaster Unemployment Assistance (DUA); 83.542, Fire Suppression Assistance; 83.543, Individual and Family Grant (IFG) Program; 83.544, Public Assistance Grants; 83.545, Disaster Housing Program; 83.548, Hazard Mitigation Grant Program.)

**James L. Witt,**

*Director.*

[FR Doc. 99–22643 Filed 8–30–99; 8:45 am]

BILLING CODE 6718–02–P

---

## FEDERAL EMERGENCY MANAGEMENT AGENCY

**[FEMA–1282–DR]**

### Iowa; Amendment No. 5 to Notice of a Major Disaster Declaration

**AGENCY:** Federal Emergency Management Agency (FEMA).

**ACTION:** Notice.

**SUMMARY:** This notice amends the notice of a major disaster for the State of Iowa (FEMA–1282–DR), dated July 22, 1999, and related determinations.

**EFFECTIVE DATE:** August 10, 1999.

**FOR FURTHER INFORMATION CONTACT:** Madge Dale, Response and Recovery Directorate, Federal Emergency Management Agency, Washington, DC 20472, (202) 646–3772.

**SUPPLEMENTARY INFORMATION:** Notice is hereby given that the incident period for this disaster is closed effective August 10, 1999.

(The following Catalog of Federal Domestic Assistance Numbers (CFDA) are to be used for reporting and drawing funds: 83.537, Community Disaster Loans; 83.538, Cora Brown Fund Program; 83.539, Crisis Counseling; 83.540, Disaster Legal Services Program; 83.541, Disaster Unemployment Assistance (DUA); 83.542, Fire Suppression Assistance; 83.543, Individual and Family Grant (IFG) Program; 83.544, Public Assistance Grants; 83.545, Disaster Housing Program; 83.548, Hazard Mitigation Grant Program.)

**James L. Witt,**

*Director.*

[FR Doc. 99–22644 Filed 8–30–99; 8:45 am]

BILLING CODE 6718–02–P

---

## FEDERAL EMERGENCY MANAGEMENT AGENCY

**[FEMA–1283–DR]**

### Minnesota; Major Disaster and Related Determinations

**AGENCY:** Federal Emergency Management Agency (FEMA).

**ACTION:** Notice.

**SUMMARY:** This is a notice of the Presidential declaration of a major disaster for the State of Minnesota (FEMA–1283–DR), dated July 28, 1999, and related determinations.

**EFFECTIVE DATE:** July 28, 1999.

**FOR FURTHER INFORMATION CONTACT:** Madge Dale, Response and Recovery Directorate, Federal Emergency Management Agency, Washington, DC 20472, (202) 646–3772.

**SUPPLEMENTARY INFORMATION:** Notice is hereby given that, in a letter dated July 28, 1999, the President declared a major disaster under the authority of the Robert T. Stafford Disaster Relief and Emergency Assistance Act (42 U.S.C. 5121 *et seq.*), as follows:

I have determined that the damage in certain areas of the State of Minnesota, resulting from severe storms, winds, and flooding beginning on July 4, 1999, and continuing is of sufficient severity and magnitude to warrant a major disaster declaration under the Robert T. Stafford Disaster Relief and Emergency Assistance Act, P.L. 93–288, as amended (''the Stafford Act''). I, therefore, declare that such a major disaster exists in the State of Minnesota.

In order to provide Federal assistance, you are hereby authorized to allocate from funds available for these purposes, such amounts as you find necessary for Federal disaster assistance and administrative expenses.

You are authorized to provide Individual Assistance, Public Assistance, and Hazard Mitigation in the designated areas. Consistent with the requirement that Federal assistance be supplemental, any Federal funds provided under the Stafford Act for Public Assistance or Hazard Mitigation will be limited to 75 percent of the total eligible costs.

Further, you are authorized to make changes to this declaration to the extent allowable under the Stafford Act.

The time period prescribed for the implementation of section 310(a), Priority to Certain Applications for Public Facility and Public Housing Assistance, 42 U.S.C. 5153, shall be for a period not to exceed six months after the date of this declaration.

Notice is hereby given that pursuant to the authority vested in the Director of the Federal Emergency Management Agency under Executive Order 12148, I hereby appoint Ron Sherman of the Federal Emergency Management Agency to act as the Federal Coordinating Officer for this declared disaster.

I do hereby determine the following areas of the State of Minnesota to have been affected adversely by this declared major disaster:

Cook, Itasca, and St. Louis Counties for Individual Assistance.

Aitkin, Cass, Clay, Cook, Hubbard, Itasca, Lake, and St. Louis Counties for Public Assistance.

All counties within the State of Minnesota are eligible to apply for assistance under the Hazard Mitigation Grant Program.

(The following Catalog of Federal Domestic Assistance Numbers (CFDA) are to be used for reporting and drawing funds: 83.537, Community Disaster Loans; 83.538, Cora Brown Fund Program; 83.539, Crisis Counseling; 83.540, Disaster Legal Services Program; 83.541, Disaster Unemployment Assistance (DUA); 83.542, Fire Suppression Assistance; 83.543, Individual and Family Grant (IFG) Program; 83.544, Public Assistance Grants; 83.545, Disaster Housing Program; 83.548, Hazard Mitigation Grant Program.)

**James L. Witt,**

*Director.*

[FR Doc. 99–22513 Filed 8–30–99; 8:45 am]

BILLING CODE 6718–02–P

---

## FEDERAL EMERGENCY MANAGEMENT AGENCY

**[FEMA–1283–DR]**

### Minnesota; Amendment No. 1 to Notice of a Major Disaster Declaration

**AGENCY:** Federal Emergency Management Agency (FEMA).

**ACTION:** Notice.

**SUMMARY:** This notice amends the notice of a major disaster for the State of Minnesota (FEMA–1283–DR), dated July 28, 1999, and related determinations.

**EFFECTIVE DATE:** August 2, 1999.

**FOR FURTHER INFORMATION CONTACT:** Madge Dale, Response and Recovery Directorate, Federal Emergency Management Agency, Washington, DC 20472, (202) 646–3772.

**SUPPLEMENTARY INFORMATION:** Notice is hereby given that the incident period for this disaster is closed effective August 2, 1999.

(The following Catalog of Federal Domestic Assistance Numbers (CFDA) are to be used for reporting and drawing funds: 83.537,

Community Disaster Loans; 83.538, Cora Brown Fund Program; 83.539, Crisis Counseling; 83.540, Disaster Legal Services Program; 83.541, Disaster Unemployment Assistance (DUA); 83.542, Fire Suppression Assistance; 83.543, Individual and Family Grant (IFG) Program; 83.544, Public Assistance Grants; 83.545, Disaster Housing Program; 83.548, Hazard Mitigation Grant Program).

**Lacy E. Suiter,**

*Executive Associate Director, Response and Recovery Directorate.*

[FR Doc. 99–22640 Filed 8–30–99; 8:45 am]

BILLING CODE 6718–02–P

## FEDERAL EMERGENCY MANAGEMENT AGENCY

**[FEMA–1283–DR]**

### Minnesota; Amendment No. 3 to Notice of a Major Disaster Declaration

**AGENCY:** Federal Emergency Management Agency (FEMA).

**ACTION:** Notice.

**SUMMARY:** This notice amends the notice of a major disaster for the State of Minnesota, (FEMA–1283-DR), dated July 28, 1999, and related determinations.

**EFFECTIVE DATE:** August 5, 1999.

**FOR FURTHER INFORMATION CONTACT:** Madge Dale, Response and Recovery Directorate, Federal Emergency Management Agency, Washington, DC 20472, (202) 646–3772.

**SUPPLEMENTARY INFORMATION:** The notice of a major disaster for the State of Minnesota is hereby amended to include the following area among those areas determined to have been adversely affected by the catastrophe declared a major disaster by the President in his declaration of July 28, 1999:

Lake County for Individual Assistance (already designated for Public Assistance).

(The following Catalog of Federal Domestic Assistance Numbers (CFDA) are to be used for reporting and drawing funds: 83.537, Community Disaster Loans; 83.538, Cora Brown Fund Program; 83.539, Crisis Counseling; 83.540, Disaster Legal Services Program; 83.541, Disaster Unemployment Assistance (DUA); 83.542, Fire Suppression Assistance; 83.543, Individual and Family Grant (IFG) Program; 83.544, Public Assistance Grants; 83.545, Disaster Housing Program; 83.548, Hazard Mitigation Grant Program.)

**Lacy E. Suiter,**

*Executive Associate Director, Response and Recovery Directorate.*

[FR Doc. 99–22641 Filed 8–30–99; 8:45 am]

BILLING CODE 6718–02–P

## FEDERAL TRADE COMMISSION

**[File No. 991 0041]**

### The Kroger Co., et al.; Analysis To Aid Public Comment

**AGENCY:** Federal Trade Commission.

**ACTION:** Proposed consent agreement.

**SUMMARY:** The consent agreement in this matter settles alleged violations of federal law prohibiting unfair or deceptive acts or practices or unfair methods of competition. The attached Analysis to Aid Public Comment describes both the allegations in the draft complaint that accompanies the consent agreement and the terms of the consent order—embodied in the consent agreement—that would settle these allegations.

**DATES:** Comments must be received on or before November 1, 1999.

**ADDRESSES:** Comments should be directed to: FTC/Office of the Secretary, Room 159, 600 Pennsylvania Ave., NW, Washington, DC 20580.

**FOR FURTHER INFORMATION CONTACT:** William Baer, FTC/H–374, 600 Pennsylvania Ave., NW, Washington, DC 20580. (202) 326–2932 or Laurel Price and Michael Rose, Federal Trade Commission, East Central Regional Office, 1111 Superior Ave., Suite 200, Cleveland, OH 44114. (216) 263–3417.

**SUPPLEMENTARY INFORMATION:** Pursuant to Section 6(f) of the Federal Trade Commission Act, 38 Stat. 721, 15 U.S.C. 46 and Section 2.34 of the Commission's Rules of Practice (16 CFR 2.34), notice is hereby given that the above-captioned consent agreement containing a consent order to cease and desist, having been filed with and accepted, subject to final approval, by the Commission, has been placed on the public record for a period of sixty (60) days. The following Analysis to Aid Public Comment describes the terms of the consent agreement, and the allegations in the complaint. An electronic copy of the full text of the consent agreement package can be obtained from the FTC Home Page (for August 23, 1999), on the World Wide Web, at ''http://www.ftc.gov/os/actions97.htm.'' A paper copy can be obtained from the FTC Public Reference Room, Room H–130, 600 Pennsylvania Avenue, NW, Washington, DC 20580, either in person or by calling (202) 326–3627.

Public comment is invited. Comments should be directed to: FTC/Office of the Secretary, Room 159, 600 Pennsylvania Ave., NW, Washington, DC 20580. Two paper copies of each comment should be filed, and should be accompanied, if possible, by a 3½ inch diskette containing an electronic copy of the comment. Such comments or views will be considered by the Commission and will be available for inspection and copying at its principal office in accordance with Section 4.9(b)(6)(ii) of the Commission's Rules of Practice (16 CFR 4.9(b)(6)(ii)).

#### Analysis To Aid Public Comment

The Federal Trade Commission (''Commission'') has accepted for public comment from The Kroger Co. (''Kroger'') and The John C. Groub Company, Inc. (''Groub'') (collectively ''the Proposed Respondents'') an Agreement Containing consent order (''Order''). The Order, requiring the divestiture of three supermarkets to Roundy's Inc., is designed to remedy likely anticompetitive effects arising from Kroger's acquisition of substantially all of the assets of Groub.

Kroger is an Ohio corporation headquartered in Cincinnati, Ohio. It is the largest supermarket firm in the United States, with 1997 fiscal year sales in excess of $26 billion. Kroger operates more than 2,200 supermarkets and convenience stores in 37 states. Kroger operates 89 supermarkets in Indiana. Two Kroger supermarkets directly compete with four Groub stores subject to this transaction.

Groub, an Indiana corporation headquartered in Seymour, Indiana, operates 30 retail supermarkets in southern and central Indiana under the names ''Jay C,'' ''Foods Plus,'' and ''Ruler.'' Groub sales for the 1997 fiscal year were approximately $252,000,000.

The proposed complaint alleges that the relevant line of commerce (i.e., the product market) is the retail sale of food and grocery items in supermarkets. Supermarkets provide a distinct set of products and services for consumers who desire one-stop shopping for food and grocery products. Supermarkets carry a full line and wide selection of both food and nonfood products (typically more than 10,000 different stock-keeping units (''SKUs'')), as well as a deep inventory of those SKUs. In order to accommodate the large number of food and nonfood products necessary for one-stop shopping, supermarkets are large stores that typically have at least 10,000 square feet of selling space.

Supermarkets compete primarily with other supermarkets that provide one-stop shopping for food and grocery products. Supermarkets primarily base their food and grocery prices on the prices of food and grocery products sold at other nearby supermarkets. Supermarkets do not regularly price-check food and grocery products sold at other types of stores, and do not

significantly change their food and grocery prices in response to prices at other types of stores. Most consumers shopping for food and grocery products at supermarkets are not likely to shop elsewhere in response to a small price increase by supermarkets.

Retail stores other than supermarkets that sell food and grocery products, such as neighborhood ''mom & pop'' grocery stores, convenience stores, specialty food stores (e.g., seafood markets, bakeries, etc.), club stores, military commissaries, and mass merchants, do not effectively constrain prices at supermarkets. These other stores operate significantly different retail formats. None of these stores offers a supermarket's distinct set of products and services that enable consumers to one-stop shop for food and grocery products.

Kroger and Groub are direct competitors in the retail sale of food and grocery items in supermarkets in Columbus and Madison, Indiana. Columbus has a population of approximately 34,000 people; Madison's population is around 40,000. According to the proposed complaint, the Columbus and Madison relevant markets are highly concentrated, whether measured by the Herfindahl-Hirschman Index (commonly referred to as ''HHI'') or by two-firm and four-firm concentration ratios.[1] The acquisition would substantially increase concentration in each market. Kroger and Groub would have a combined market share in the geographic markets of Columbus and Madison of near or greater than 66% and 54%, respectively. The post-acquisition HHIs would be 5,254 in Columbus and 4,262 in Madison. According to the proposed complaint, entry is difficult and would not be timely, likely, or sufficient to prevent anticompetitive effects in the relevant geographic markets.

According to the proposed complaint, Kroger's acquisition of Groub may substantially lessen competition in the relevant markets in violation of Section 7 of the Clayton Act, as amended, 15 U.S.C. 18, and Section 5 of the Federal Trade Commission Act, as amended, 15 U.S.C. 45, by eliminating direct competition between supermarkets owned or controlled by Kroger and supermarkets owned or controlled by Groub; by increasing the likelihood that Kroger will unilaterally exercise market power; and by increasing the likelihood of, or facilitating, collusion or coordinated interaction among the remaining supermarket firms. Each of these effects increases the likelihood that the prices of food, groceries or services will increase, and the quality and selection of food, groceries or services will decrease, in the relevant sections of the country.

To remedy the antitrust concerns in these markets, under the terms of the Order, the Proposed Respondents must divest three supermarkets in the relevant markets. The Proposed Respondents must divest: (1) one Groub ''Jay C'' and one Groub ''Foods Plus'' in Columbus, Indiana, and (2) one ''Kroger'' in Madison, Indiana, to Roundy's, Inc. (''Roundy's''). Roundy's is one of the largest food wholesalers in the United States and an operator of company-owned supermarkets.

These divestitures include every Kroger supermarket or every Groub supermarket in each relevant market. Roundy's owns no supermarkets in the same market where it is acquiring one or more divested supermarkets from the Proposed Respondents. The specific supermarkets that the Proposed Respondents must divest to Roundy's are:

1. Groub store no. 92 operating under the ''Foods Plus'' trade name, which is located at 1343 North National Road, Columbus, Indiana 47201 (Bartholomew County)

2. Groub store no. 89 operating under the ''Jay C'' trade name, which is located at 2540 Eastbrook Plaza, Columbus, Indiana 47201 (Bartholomew County); and

3. Kroger store no. 304 operating under the ''Kroger'' trade name, which is located at 748 Jefferson Court, Madison, Indiana 47250 (Jefferson County).

From the time Kroger acquires substantially all of the assets of Groub until the divestitures have been completed, the Proposed Respondents are required to maintain the viability, competitiveness, and marketability of the assets to be divested, must not cause their wasting or deterioration, and cannot sell, transfer, or otherwise impair their marketability or viability

The Order, which was executed on July 13, 1999, specifically requires that the divestitures occur no later than 20 days after Kroger acquires substantially all of the assets of Groub or four months after the proposed Respondents signed the Order, whichever is earlier. The Order also requires Kroger and Groub to include rescission provisions in their up-front buyer agreements that allow them to rescind the transaction(s) if the Commission, after the comment period, decides to reject any up-front buyer(s). If Kroger divests the supermarkets to be divested prior to the date the Order becomes final, and if, at the time the Commission decides to make the Order final, the Commission notifies Kroger or Groub that the up-front buyer is not an acceptable acquirer or that any of the up-front buyer agreements is not an acceptable manner of divestiture, then Kroger or Groub must immediately rescind the transaction in question and divest those assets within three months after the Order becomes final. At that time, Kroger or Groub must divest those assets only to an acquirer that receives the prior approval of the Commission and only in a manner that receives the prior approval of the Commission.

The Commission's goal in evaluating possible purchasers of divested assets is to maintain the competitive environment that existed prior to the acquisition. When divestiture is an appropriate remedy for a supermarket acquisition, the Commission requires the parties to find a buyer for the divested stores. A proposed buyer must not itself present competitive problems. For example, the Commission is less likely to approve a buyer that already has a large retail presence in the relevant geographic area than a buyer without such a presence. The Commission is satisfied that the purchaser presented by the parties is well qualified to run the divested stores and that divestiture to that purchaser poses no separate competitive issues.

For a period of 10 years from the date the Order becomes final, Kroger is required to provide notice to the Commission prior to acquiring supermarket assets located in, or any interest (such as stock) in any entity that owns or operates a supermarket located in, Bartholomew or Jefferson counties, Indiana. Kroger may not complete such an acquisition until it has provided information requested by the Commission. This provision does not restrict Kroger from constructing new supermarket facilities on its own; nor does it restrict Kroger from leasing facilities not operated as supermarkets within the previous six months.

For a period of 10 years, the Order also prohibits Kroger from entering into or enforcing any agreement that restricts the ability of any person that acquires any supermarket, any leasehold interest in any supermarket, or any interest in any retail location used as a supermarket on or after July 13, 1999, to operate a supermarket at that site if such a supermarket was formerly owned or operated by the Kroger in Batholomew or Jefferson counties, Indiana. In addition, Kroger may not remove fixtures or equipment from a store or property owned or leased in

[1] The HHI is a measurement of market concentration calculated by summing the squares of the individual market shares of all the participants.

Bartholomew or Jefferson counties, Indiana, that is no longer in operation as a supermarket, except (1) prior to sale, sublease, assignment, or change in occupancy or (2) to relocate such fixtures or equipment in the ordinary course of business to any other supermarket owned or operated by Kroger.

The Proposed Respondents are required to provide to the Commission a report of compliance with the Order within 30 days following the date on which they signed the consent agreement and every 30 days thereafter until the diversitures are completed: and Kroger must report annually for a period of 10 years from the date the proposed order becomes final. The obligations of Group under the Order will terminate upon the date it becomes final.

The Order has been placed on the public record for 60 days for receipt of comments by interested persons. Comments received during this period will become part of the public record. After 60 days, the Commission will again review the agreement and the comments received and will decide whether it should withdraw from the agreement or make the Order final.

By accepting the Order subject to final approval, the Commission anticipates that the competitive problems alleged in the compliant will be resolved. The purpose of this analysis is to invite public comment on the Order, including the proposed sale of supermarkets to Roundy's, in order to aid the Commission in its determination of whether to make the Order final. This analysis is not intended to constitute an official interpretation of the Order nor is it intended to modify the terms of the Order in any way.

By direction of the Commission.

**Benjamin I. Berman,**

*Acting Secretary.*

[FR Doc. 99–22575 Filed 8–30–99; 8:45 am]

BILLING CODE 6750–01–M

## DEPARTMENT OF HEALTH AND HUMAN SERVICES

### Centers for Disease Control and Prevention

### The National Center for Environmental Health (NCEH) of the Centers for Disease Control and Prevention (CDC) Announces the Following Meeting

*Name:* Pediatric Centers Directors Meeting.

*Times and Dates:* 8 a.m.–4:30 p.m., October 25, 1999; 8 a.m.–4:30 p.m., October 26, 1999.

*Place:* Sheraton Buckhead, 3405 Lenox Road NE, Atlanta, Georgia 30326, telephone 404–261–9250.

*Status:* Open to the public, limited only by space available. The meeting room accommodates approximately 100 people.

*Purpose:* The purpose of this meeting is to provide a forum for the Directors of the funded Pediatric Centers to review program progress and discuss future plans, prevention issues and concerns.

*Matters to be Discussed:* Agenda items include perspectives of funding agencies and updates from funded centers.

Agenda items are subject to change as priorities dictate.

**CONTACT PERSON FOR MORE INFORMATION:** James Rifenburg, Air Pollution and Respiratory Health Branch, Division of Environmental Hazards and Health Effects, NCEH, CDC, 4770 Buford Highway, NE, M/S F–39, Atlanta, Georgia 30341–3724, telephone 770/488–7320.

The Director, Management Analysis and Services Office, has been delegated the authority to sign **Federal Register** notices pertaining to announcements of meetings and other committee management activities for both CDC and the Agency for Toxic Substances and Disease Registry.

Dated: August 24, 1999.

**John C. Burckhardt,**

*Acting Director, Management Analysis and Services Office, Centers for Disease Control and Prevention.*

[FR Doc. 99–22526 Filed 8–30–99; 8:45 am]

BILLING CODE 4168–18–P

## DEPARTMENT OF HEALTH AND HUMAN SERVICES

### Centers for Disease Control and Prevention

### National Vaccine Advisory Committee, Subcommittee on Future Vaccines, Subcommittee on Immunization Coverage, and Subcommittee on Vaccine Safety and Communication Meetings

In accordance with section 10(a)(2) of the Federal Advisory Committee Act (Pub. L. 92–463), the Centers for Disease Control and Prevention (CDC) announces the following Federal advisory committee meetings.

*Name:* National Vaccine Advisory Committee (NVAC).

*Times and Dates:* 9 a.m.–2 p.m., September 16, 1999; 8:30 a.m.–12:45 p.m., September 17, 1999.

*Place:* Hubert H. Humphrey Building, Room 505A, 200 Independence Avenue, SW, Washington, DC 20201.

*Status:* Open to the public, limited only by the space available.

*Notice:* In the interest of security, the Department has instituted stringent procedures for entrance to the Hubert H. Humphrey Building by non-government employees. Thus, persons without a government identification card should plan to arrive at the building each day either between 8 and 8:30 a.m. or 12:30 and 1 p.m. Entrance to the meeting at other times during the day cannot be assured.

*Purpose:* This committee advises and makes recommendations to the Director of the National Vaccine Program on matters related to the Program responsibilities.

*Matters To Be Discussed:* Agenda items will include: an update on the National Vaccine Program Office (NVPO) activities; a workshop report on thimerasol in vaccines; an update on rotavirus vaccine recommendations; an update on the Vaccine Safety and Communication Subcommittee; decision making and communication issues in vaccine safety; an update on the immunization registries initiative; reports from the Future Vaccines Subcommittee, Vaccine Safety and Communication Subcommittee and the Immunization Coverage Subcommittee; an update on pandemic preparedness planning; and discussions on immunization challenges in Mexico and Canada.

*Name:* Subcommittee on Future Vaccines.

*Time and Date:* 2:45 p.m.–5 p.m., September 16, 1999.

*Place:* Hubert H. Humphrey Building, Room 305A, 200 Independence Avenue, SW, Washington, DC 20201.

*Status:* Open to the public, limited only by the space available.

*Purpose:* This subcommittee develops policy options and guides national activities that lead to accelerated development, licensure, and the best use of new vaccines in the simplest possible immunization schedules.

*Matters To Be Discussed:* Agenda items will include discussions regarding the Institute of Medicine (IOM) report concerning cytomegalovirus vaccines and the IOM report concerning enteric bacteria vaccines.

*Name:* Subcommittee on Immunization Coverage.

*Time and Date:* 2:45 p.m.–5 p.m., September 16, 1999.

*Place:* Hubert H. Humphrey Building, Room 505A, 200 Independence Avenue, SW, Washington, DC 20201.

*Status:* Open to the public, limited only by the space available.

*Purpose:* This subcommittee will identify and propose solutions that provide a multifaceted and holistic approach to reducing barriers that result in low immunization coverage for children.

*Matters To Be Discussed:* Agenda items will include updates on the roll out process for the ''Strategies to Sustain Success'' initiative; the status of the paper on adult immunizations at non-traditional sites and standards for adult immunizations at non-

traditional sites; and, adolescent immunizations. The subcommittee will also discuss revisions of adult immunization standards in conjunction with the National Coalition for Adult Immunization; and assessment of vaccine coverage in view of recent vaccine safety issues.

*Name:* Subcommittee on Vaccine Safety and Communication.

*Time and Date:* 2:45 p.m.–5 p.m., September 16, 1999.

*Place:* Hubert H. Humphrey Building, Room 325A, 200 Independence Avenue, SW, Washington, DC 20201.

*Status:* Open to the public, limited only by the space available.

*Purpose:* This subcommittee reviews issues relevant to vaccine safety and adverse reactions to vaccines.

*Matters To Be Discussed:* Agenda items include a discussion on Thimerosal in vaccines, rotavirus vaccine and intussusception and the private governmental communications/response to acute vaccine safety issues.

Agenda items are subject to change as priorities dictate.

**CONTACT PERSON FOR MORE INFORMATION:** Gloria Sagar, Committee Management Specialist, NVPO, CDC, 1600 Clifton Road, NE, M/S A–11, Atlanta, Georgia 30333, telephone 404/639–4450.

The Director, Management Analysis and Services Office, has been delegated the authority to sign **Federal Register** notices pertaining to announcements of meetings and other committee management activities for both CDC and the Agency for Toxic Substances and Disease Registry.

Dated: August 24, 1999.

**John C. Burckhardt,**

*Acting Director, Management Analysis and Services Office, Centers for Disease Control and Prevention.*

[FR Doc. 99–22525 Filed 8–30–99; 8:45 am]

**BILLING CODE 4163–18–P**

---

## DEPARTMENT OF HEALTH AND HUMAN SERVICES

### Administration for Children and Families

### Program Enhancement Supplement of National Adoption Information Exchange

**AGENCY:** Administration for Children and Families (ACYF)—Children's Bureau, ACF, DHHS.

**ACTION:** Notice.

**SUMMARY:** Notice is hereby given concerning the intention of the Children's Bureau to award a noncompetitive supplement of the National Adoption Information Exchange (NAE) project of $500,000 for an additional year—not to extend beyond September 29, 2000 to the National Adoption Center, Philadelphia, Pennsylvania. This noncompetitive supplement will allow for the continuation of a current NAE in order to facilitate the adoption of children with special needs in preparation for full competition of an expanded effort in FY 2000.

On November 24, 1998, the President issued an Executive Memorandum to the Secretary of Health and Human Services, directing the Secretary to develop a plan to expand the use of the Internet as a tool for finding homes for children waiting to be adopted from the public child welfare system. The plan calls for an extensive consultation process with state social services agencies, courts, private agencies and other interested stakeholders, to identify and address important issues and strategies and build on promising existing efforts to create an effective national registry system.

The Administration on Children, Youth and Families is awarding this supplement until the expanded scope of the project has been established and all eligible organizations will have a fair and equitable opportunity to compete for the multiyear project. This will ensure that the project offered to the field for competition is the project described by the Executive Memorandum. It will also ensure that the successful applicant is the best qualified to perform the activities called for by the expanded scope.

**Authority:** The award will be made under the authority of the Adoption Opportunities Program, Title II of the Child Abuse Prevention and Treatment and Adoption Reform Act of 1978, as amended [42 U.S.C. 5111].

**FOR FURTHER INFORMATION CONTACT:** Geneva Ware-Rice, Children's Bureau, Administration on Children, Youth and Families, 330 C Street, SW, Room 2424, Washington, DC 20447; Telephone: (202) 205–8305.

Dated: August 25, 1999.

**Patricia Montoya,**

*Commissioner, Administration on Children, Youth and Families.*

[FR Doc. 99–22606 Filed 8–30–99; 8:45 am]

**BILLING CODE 4184–01–M**

---

## DEPARTMENT OF HEALTH AND HUMAN SERVICES

### Food and Drug Administration

**[Docket No. 99N–1522]**

### Agency Information Collection Activities; Submission for OMB Review; Comment Request; Temporary Marketing Permit Applications

**AGENCY:** Food and Drug Administration, HHS.

**ACTION:** Notice.

**SUMMARY:** The Food and Drug Administration (FDA) is announcing that the proposed collection of information listed below has been submitted to the Office of Management and Budget (OMB) for review and clearance under the Paperwork Reduction Act of 1995 (the PRA).

**DATES:** Submit written comments on the collection of information by September 30, 1999.

**ADDRESSES:** Submit written comments on the collection of information to the Office of Information and Regulatory Affairs, OMB, New Executive Office Bldg., 725 17th St. NW., rm. 10235, Washington, DC 20503, Attn: Wendy Taylor, Desk Officer for FDA.

**FOR FURTHER INFORMATION CONTACT:** Peggy Schlosburg, Office of Information Resources Management (HFA–250), Food and Drug Administration, 5600 Fishers Lane, Rockville, MD 20857, 301–827–1223.

**SUPPLEMENTARY INFORMATION:** In compliance with 44 U.S.C. 3507, FDA has submitted the following proposed collection of information to OMB for review and clearance.

#### Temporary Marketing Permit Applications—21 CFR 130.17(c) and (I) (OMB Control Number 0910–0133)—Extension

Section 401 of the Federal Food, Drug, and Cosmetic Act (the act) (21 U.S.C. 341) directs FDA to issue regulations establishing definitions and standards of identity for food ''whenever * * * such action will promote honesty and fair dealing in the interest of consumers.'' Under section 403(g) of the act (21 U.S.C. 343(g)), a food that is subject to a definition and standard of identity prescribed by regulation is misbranded if it does not conform to such definition and standard of identity. Section 130.17 (21 CFR 130.17) provides for the issuance by FDA of temporary marketing permits that enable the food industry to test consumer acceptance and measure the technological and commercial feasibility in interstate

commerce of experimental packs of food that deviate from applicable definitions and standards of identity. Section 130.17(c) specifies the information that a firm must submit to FDA to obtain a temporary marketing permit. The information required in a temporary marketing permit application under § 130.17(c) enables the agency to monitor the manufacture, labeling, and distribution of experimental packs of food that deviate from applicable definitions or standards of identity. The information so obtained can be used in support of a petition to establish or amend the applicable definition or standard of identity to provide for the variations. Section 130.17(I) specifies the information that a firm must submit to FDA to obtain an extension of a temporary marketing permit.

In the **Federal Register** of June 8, 1999 (64 FR 30524), the agency requested comments on the proposed collections of information. No significant comments were received.

FDA estimates the burden of this collection of information as follows:

TABLE 1.—ESTIMATED ANNUAL REPORTING BURDEN

| 21 CFR Section | No. of Respondents | Annual Frequency per Response | Total Annual Responses | Hours per Response | Total Hours |
|---|---|---|---|---|---|
| 130.17(c) | 3 | 1 | 3 | 25 | 75 |
| 130.17(I) | 4 | 2 | 8 | 2 | 16 |
| Total | | | | | 91 |

[1]There are no capital costs or operating and maintenance costs associated with this collection of information.

The estimated number of temporary marketing permit applications and hours per response is an average based on the agency's experience with applications received from October 1, 1995, through September 30, 1998, and information from firms that have submitted recent requests for temporary marketing permits.

Dated: August 25, 1999.

**William K. Hubbard,**

*Senior Associate Commissioner for Policy, Planning and Legislation.*

[FR Doc. 99–22605 Filed 8–30–99; 8:45 am]

BILLING CODE 4160–01–F

## DEPARTMENT OF HEALTH AND HUMAN SERVICES

### Food and Drug Administration

### Ophthalmic Devices Panel of the Medical Devices Advisory Committee; Notice of Meeting

**AGENCY:** Food and Drug Administration, HHS.

**ACTION:** Notice.

This notice announces a forthcoming meeting of a public advisory committee of the Food and Drug Administration (FDA). The meeting will be open to the public.

*Name of Committee:* Ophthalmic Devices Panel of the Medical Devices Advisory Committee.

*General Function of the Committee:* To provide advice and recommendations to the agency on FDA's regulatory issues.

*Date and Time:* The meeting will be held on September 23, 1999, 8:30 a.m. to 5 p.m.

*Location:* Holiday Inn, Lincoln Ballroom, 8777 Georgia Ave., Silver Spring, MD.

*Contact Person:* Sara M. Thornton, Center for Devices and Radiological Health (HFZ–460), Food and Drug Administration, 9200 Corporate Blvd., Rockville, MD 20850, 301–594–2053, or by e-mail at smt@cdrh.fda.gov, or FDA Advisory Committee Information Line, 1–800–741–8138 (301–443–0572 in the Washington, DC area), code 12396. Please call the Information Line for up-to-date information on this meeting.

*Agenda:* On September 23, 1999, from 8:30 a.m. to 1:30 p.m., the committee will hear formal presentations followed by public participation in a discussion of keratomes. Public participants in the group discussion are requested to develop a comprehensive list of problems associated with keratomes, the related causes, and the steps that can be taken to mitigate the problems. From 1:30 p.m. to 5 p.m., the committee will discuss issues related to defining the scope and purpose of a proposed keratome guidance to be developed from an outline of contents currently recommended for keratome premarket notification submissions. Single copies of the outline are available to the public by contacting the person noted above.

*Procedure:* Interested persons may present data, information, or views, orally or in writing, on issues pending before the committee. Written submissions may be made to the contact person by September 7, 1999. Formal oral presentations from the public will be scheduled between approximately 9:15 a.m. and 10:15 a.m. on September 23, 1999. Those desiring to make formal oral presentations should notify the contact person before September 10, 1999, and submit a brief statement of the general nature of the evidence or arguments they wish to present, the names and addresses of proposed participants, and an indication of the approximate time requested to make their presentation. Those desiring to be a participant in the open group discussion should notify the contact person by September 10, 1999, to reserve a place at a discussion table.

Notice of this meeting is given under the Federal Advisory Committee Act (5 U.S.C. app. 2).

Dated: August 23, 1999.

**Linda A. Suydam,**

*Senior Associate Commissioner.*

[FR Doc. 99–22604 Filed 8–30–99; 8:45 am]

BILLING CODE 4160–01–F

## DEPARTMENT OF HEALTH AND HUMAN SERVICES

### National Institutes of Health

### National Institute of Diabetes and Digestive and Kidney Diseases; Notice of Closed Meeting

Pursuant to section 10(d) of the Federal Advisory Committee Act, as amended (5 U.S.C. Appendix 2), notice is hereby given of the following meeting.

The meeting will be closed to the public in accordance with the provisions set forth in sections 552b(c)(4) and 552b(c)(6), Title 5 U.S.C., as amended. The contract proposals and the discussions could disclose confidential trade secrets or commercial property such as patentable material, and personal information concerning individuals associated with the contract proposals, the disclosure of which would constitute a clearly unwarranted invasion of personal privacy.

*Name of Committee:* National Institute of Diabetes and Digestive and Kidney Diseases Special Emphasis Panel, ZDK1 GRBC (C1).

*Date:* September 10, 1999.

*Time:* 1 P.M. to 3 P.M.

*Agenda:* To review and evaluate contract proposals.

*Place:* National Institutes of Health; Natcher Bldg., 45 Center Drive, Room 6AS–37, Bethesda, MD 20892, (Telephone Conference Call).

*Contact Person:* Dan E. Matsumoto, Phd, Scientific Review Administrator, Review Branch, DEA, NIDDK, Natcher Building, Room 6AS–37B, National Institutes of Health, Bethesda, MD 20892–6600, (301) 594–8894.

(Catalogue of Federal Domestic Assistance Program Nos. 93.847, Diabetes, Endocrinology and Metabolic Research; 93.848, Digestive Diseases and Nutrition Research; 93.849, Kidney Diseases, Urology and Hematology Research, National Institutes of Health, HHS)

Dated: August 24, 1999.

**LaVerne Y. Stringfield,**

*Director, Office of Federal Advisory Committee Policy.*

[FR Doc. 99–22557 Filed 8–30–99; 8:45 am]

BILLING CODE 4140–01–M

## DEPARTMENT OF HEALTH AND HUMAN SERVICES

### National Institutes of Health

### National Institute of Dental and Craniofacial Research; Notice of Meeting

Pursuant to section 10(d) of the Federal Advisory Committee Act, as amended (5 U.S.C. Appendix 2), notice is hereby given of a meeting of the National Advisory Dental and Craniofacial Research Council.

The meeting will be open to the public as indicated below, with attendance limited to space available. Individuals who plan to attend and need special assistance, such as sign language interpretation or other reasonable accommodations, should notify the Contact Person listed below in advance of the meeting.

The meeting will be closed to the public in accordance with the provisions set forth in sections 552b(c)(4) and 552b(c)(6), Title 5 U.S.C., as amended. The grant applications and/or contract proposals and the discussions could disclose confidential trade secrets or commercial property such as patentable material, and personal information concerning individuals associated with the grant applications and/or contract proposals, the disclosure of which would constitute a clearly unwarranted invasion of personal privacy.

*Name of Committee:* National Advisory Dental and Craniofacial Research Council, Discussion of Blue Ribbon Panel on Training and Career Development.

*Date:* September 27–28, 1999.

*Open:* September 27, 1999, 9:30 a.m. to 5 p.m.

*Agenda:* Other.

*Place:* Building 31, C Wing, 6th Floor, Conference Room 10, National Institutes of Health, 3100 Center Drive, Bethesda, MD 20892.

*Closed:* September 28, 1999, 9 a.m. to 2 p.m.

*Agenda:* To review and evaluate grant applications and/or proposals.

*Place:* Building 31, C Wing, 6th Floor, Conference Room 10, National Institutes of Health, 3100 Center Drive, Bethesda, MD 20892.

*Contact Person:* Dushanka V. Kleinman, Deputy Director, National Institutes of Dental and Craniofacial Res., National Institutes of Health, 9000 Rockville Pike, 31/2C39, Bethesda, MD 20892.

(Catalogue of Federal Domestic Assistance Program Nos. 93.121, Oral Diseases and Disorders Research, National Institutes of Health, HHS)

Dated: August 24, 1999.

**LaVerne Y. Stringfield,**

*Director, Office of Federal Advisory Committee Policy, NIH.*

[FR Doc. 99–22558 Filed 8–30–99; 8:45 am]

BILLING CODE 4140–01–M

## DEPARTMENT OF HEALTH AND HUMAN SERVICES

### National Institutes of Health

### National Institute on Drug Abuse; Notice of Meeting

Pursuant to section 10(d) of the Federal Advisory Committee Act, as amended (5 U.S.C. Appendix 2), notice is hereby given of a meeting of the National Advisory Council on Drug Abuse.

The meeting will be open to the public as indicated below, with attendance limited to space available. Individuals who plan to attend and need special assistance, such as sign language interpretation or other reasonable accommodations, should notify the Contact Person listed below in advance of the meeting.

The meeting will be closed to the public in accordance with the provisions set forth in sections 552b(c)(4) and 552b(c)(6), Title 5 U.S.C., as amended. The grant applications and the discussions could disclose confidential trade secrets or commercial property such as patentable material, and personal information concerning individuals associated with the grant applications, the disclosure of which would constitute a clearly unwarranted invasion of personal privacy.

*Name of Committee*: National Advisory Council on Drug Abuse.

*Date*: September 14–15, 1999.

*Closed*: September 14, 1999, 1 PM to adjournment.

*Agenda*: To review and evaluate grant applications.

*Place*: Neuroscience Center, National Institutes of Health, 6001 Executive Blvd., Bethesda, MD 20892.

*Open*: September 15, 1999, 9 AM to adjournment.

*Agenda*: This portion of the meeting will be open to the public for announcements and reports of administrative, legislative and program developments in the drug abuse field.

*Place*: Neuroscience Center, National Institutes of Health, 6001 Executive Blvd., Bethesda, MD 20892.

*Contact Person*: Teresa Levitin, PhD; Director, Office of Extramural Program Review, National Institutes on Drug Abuse, National Institute of Health, DHHS, Bethesda, MD 20892–9547; (301) 443–2755.

(Catalogue of Federal Domestic Assistance Program Nos. 93.277, Drug Abuse Scientist Development Award for Clinicians, Scientist Development Awards, and Research Scientist Awards; 93.278, Drug Abuse National Research Service Awards for Research Training; 93.279, Drug Abuse Research Programs, National Institutes of Health, HHS)

Dated: August 24, 1999.

**LaVerne Y. Stringfield,**

*Director, Office of Federal Advisory Committee Policy, NIH.*

[FR Doc. 99–22559 Filed 8–30–99; 8:45 am]

BILLING CODE 4140–01–M

## DEPARTMENT OF HEALTH AND HUMAN SERVICES

### National Institutes of Health

### National Institute of Allergy and Infectious Diseases; Notice of Closed Meeting

Pursuant to section 10(d) of the Federal Advisory Committee Act, as amended (5 U.S.C. Appendix 2), notice is hereby given of the following meeting.

The meeting will be closed to the public in accordance with the provisions set forth in sections 552b(c)(4) and 552b(c)(6), Title 5 U.S.C., as amended. The contract proposals and the discussions could disclose confidential trade secrets or commercial property such as patentable material, and personal information concerning individuals associated with the contract proposals, the disclosure of which would constitute a clearly unwarranted invasion of personal privacy.

*Name of Committee:* National Institute of Allergy and Infectious Diseases Special Emphasis Panel, Scientific, Technical, and Logistics Support for the DEA, NIAID.

*Date:* September 28, 1999.

*Time:* 8:30 AM to 5 PM.

*Agenda:* To review and evaluate contract proposals.

*Place:* NHLBI, NIH (Room 9100), 6701 Rockledge Drive, Bethesda, MD 20892–7924.

*Contact Person:* C. James Scheirer, PhD, Chief, Review Branch, Division of Extramural Affairs, National Heart, Lung, and Blood Institute, Rockledge Center II, 6701 Rockledge Drive, Suite 7216, Bethesda, MD 20892–7924; 301–435–0266.

(Catalogue of Federal Domestic Assistance Program Nos. 93.855, Allergy, Immunology, and Transplantation Research; 93.856, Microbiology and Infectious Diseases Research, National Institutes of Health, HHS)

Dated: August 24, 1999.

**LaVerne Y. Stringfield,**

*Director, Office of Federal Advisory Committee Policy, NIH.*

[FR Doc. 99–22560 Filed 8–30–99; 8:45 am]

BILLING CODE 4140–01–M

---

## DEPARTMENT OF HEALTH AND HUMAN SERVICES

### Public Health Service

### National Institutes of Health, National Institute of Environmental Health Sciences; Notice of Workshop on ''The Role of Human Exposure Assessment in the Prevention of Environmental Disease,'' Doubletree Hotel, I750 Rockville Pike, Rockville, MD, September 22–24, 1999

**Overview**

Knowledge of human exposures to agents of potential public health concern is critical for a successful and scientifically sound approach to the evaluation of human health risks resulting from environmental and occupational exposures. This workshop will focus on the exposure-dose-response-disease paradigm and will describe current opportunities and challenges in exposure assessment research, provide usable information on disease-specific chemical exposures that will enhance integration of exposure assessment with epidemiology and toxicology studies, and highlight approaches for further research and the development of effective prevention and intervention strategies. The two and one-half day workshop is structured so that most of the time will be spent in organized breakout sessions on the state of the science and case studies that will gain focus from the plenary sessions. A Workshop Proceedings Report summarizing the workshop and sessions, and report/recommendations from the breakout groups is planned.

The meeting is open to the public, limited only by space available. The program includes time for open discussion. In addition, time will be allotted to persons wishing to make oral comments. The time allotted for each presenter will be dependent on the number of speakers. Those wishing to speak are encouraged to preregister. A poster session will be held the first evening of the workshop. Those interested in presenting a poster must submit an abstract. The deadline for receipt of abstracts is Tuesday, September 7, 1999.

Co-sponsors for the workshop include the National Institutes of Health's Office of Rare Diseases, National Institute of Environmental Health Sciences and National Cancer Institute; the National Toxicology Program; the Centers for Disease Control and Prevention's National Institute for Occupational Safety and Health and National Center for Environmental Health; the U.S. Environmental Protection Agency's Office of Research and Development; and the American Industrial Health Council.

The preliminary program follows:

*Wednesday, September 22*

7:30 AM Registration
8:45 AM Welcome
Dr. Kenneth Olden, NIEHS
9 AM Opening Remarks: Human Exposure Assessment and Environmental Disease
Dr. Samuel Wilson, NIEHS
9:15 AM Workshop Charge: Utility and Applications of Exposure Assessment
Dr. George Lucier, NIEHS
Dr. Scott Masten, NIEHS
9:30 AM–12:15 PM Plenary Session I: Exposure Assessment in Perspective Chair:
Dr. Noorine Noonan, USEPA
9:30 AM Exposure Assessment: Present and Future
Dr. Paul Lioy, UMDNJ, EOHSI
10:15 AM Break
10:45 AM Human Exposure Assessment: Challenges and Opportunities for improving the Linkage between Exposure and Disease
Dr. Howard Hu, Harvard University
11:30 AM Exposure Assessment: Regulatory and Legislative Issues
Dr. Lynn Goldman, Johns Hopkins University and NIEHS
12:15 PM Lunch
1:30 PM–3:30 PM Plenary Session II: Emerging Issues in Exposure Assessment
Chair: Dr. John Spengler, Harvard University
1:30 PM Sensitive Populations at Risk
Dr. Philip Landrigan, Mt. Sinai School of Medicine
2:10 PM Gene-Environment Interactions: Bringing Together Molecular Epidemiology and Exposure Assessment
Dr. John Groopman, Johns Hopkins University
2:50 PM Disease Prevention and Intervention: Role of Exposure Assessment
Dr. Richard Jackson, NCEH
3:30 PM Break
4:00 PM–5:30 PM Plenary Session III: Some Federal Initiatives in Exposure Assessment
Chair: Dr. Ken Sexton, University of Minnesota
4 PM National Human Exposure Assessment Survey (NHEXAS): Opportunities and Lessons Learned
Dr. Judith Graham, USEPA
4:30 PM A National Occupational Exposure Survey: Planning and Implementation
Dr. DeLon Hull, NIOSH
5 PM National Health and Nutrition Examination Survey (NHANES): A National Biomonitoring Strategy
Dr. Larry Needham, NCEH
5:30 PM-7:30 PM Poster Session and Reception

*Thursday, September 23*

7:30 AM Registration
8:30 AM–5:30 PM Breakout Group Sessions (concurrent)
Group 1: Aggregate and Cumulative Exposure and Risk Assessment
Group 2: Disproportionate Exposures and Disease Impact
Group 3: Assessing Environmental Influences on Children's Health
Group 4: Integrating Exposure, Dose, Response, and Susceptibility
Group 5: Exposure Assessment in Occupational and Environmental Epidemiology
8:30 AM Introduction and Charge Breakout Group Chairs
8:40 AM Breakout Group Presentations and Discussion
10 AM Break
10:30 AM Breakout Group Presentations and Discussion continued
12 PM Lunch
1:30 PM Breakout Group Presentations and Discussion continued
3 PM Break
3:30 PM Breakout Group Presentations and Discussion continued

*Friday, September 24*

7:30 AM Registration
8 AM Public Comments
9:15 AM–1:15 PM Plenary Session IV: Conclusions
Chair: Dr. George Lucier, NIEHS
9:15 AM Closing Address: A Public Health Perspective

Dr. Bernard Goldstein, UMDNJ, EOHSI
10 AM Break
10:30 AM Conclusions and Recommendations
Summary of Plenary Sessions
Breakout Group Reports
Open Discussion
1 PM Wrap-Up and Closing Remarks
Dr. George Lucier, NIEHS
1:15 PM Workshop Adjourns

To register or for additional information, please access the NIEHS homepage at *http://www.niehs.nih.gov* or contact Anna Lee Sabella at (919) 541–4982 or e-mail to *sabella@niehs.nih.gov*.

Dated: August 23, 1999.

**Kenneth Olden,**

*Director, National Institute of Environmental Health Sciences.*

[FR Doc. 99–22556 Filed 8–30–99; 8:45 am]

BILLING CODE 4140–01–P

## DEPARTMENT OF THE INTERIOR

### Office of the Secretary

**[WO–640–1020–00–241E]**

### Front Range Resource Advisory Council, Northwest Resource Advisory Council, and Southwest Resource Advisory Council (State of Colorado); Renewal

**AGENCY:** Bureau of Land Management, Interior.

**ACTION:** Front Range Resource Advisory Council, Northwest Resource Advisory Council, and Southwest Resource Advisory Council (State of Colorado)—Notice of renewal.

**SUMMARY:** This notice announces the renewal of the Bureau of Land Management's Front Range Resource Advisory Council, Northwest Resource Advisory Council, and Southwest Resource Advisory Council by the Secretary of the Interior (Secretary) in accordance with the provisions of the Federal Advisory Committee Act (FACA) of 1972, 5 U.S.C. Appendix. The Secretary has determined the Councils are necessary and in the public interest. Copies of the Council charters will be filed with the appropriate committees of Congress and the Library of Congress in accordance with Section 9(c) of FACA.

The Federal Land Policy and Management Act, as amended, requires the Secretary to establish advisory councils to provide advice concerning the problems relating to land use planning and the management of public lands within the area for which the advisory councils are established. The Councils will provide representative counsel and advice to BLM on the planning and management of public lands as well as advice on public land resource issues. Council members will be residents of the State(s) in which the Councils have jurisdiction and will be appointed by the Secretary.

The purpose of the Councils is to advise the Secretary, through the BLM, on a variety of planning and management issues associated with the management of the public lands. The Council responsibilities include providing advice to BLM regarding the preparation, amendment, and implementation of land use plans; providing advice on long-range planning and establishing resource management priorities; and assisting the BLM in identifying State or regional standards for ecological health and guidelines for grazing.

Council members are representative of various industries and interests concerned with the management, protection, and utilization of the public lands. These include (a) holders of Federal grazing permits and representatives of energy and mining development, the timber industry, rights-of-way interests, off-road vehicle use, and commercial recreation; (b) representatives of nationally or regionally recognized environmental organizations, archaeological and historic interests, dispersed recreation, and wild horse and burro groups; and (c) representatives of State, county, and local government, employees of a State agency responsible for management of natural resources, Native American tribes, academia involved with natural sciences, and the public-at-large.

Membership will include individuals who have expertise, education, training, or practical experience in the planning and management of the public lands and their resources and who have a knowledge of the geographical jurisdiction(s) of the Councils.

**FOR FURTHER INFORMATION CONTACT:** Melanie Wilson, Intergovernmental Affairs (640), Bureau of Land Management, 1620 L Street, NW., Room 406 LS, Washington, DC 20240, telephone (202) 452–0377.

### Certification Statement

I hereby certify that the renewals of the Front Range Resource Advisory Council, Northwest Resource Advisory Council, and Southwest Resource Advisory Council are necessary and in the public interest in connection with the Secretary of the Interior's responsibilities to manage the lands, resources, and facilities administered by the Bureau of Land Management.

Dated: August 20, 1999.

**Bruce Babbitt,**

*Secretary of the Interior.*

[FR Doc. 99–22508 Filed 8–30–99; 8:45 am]

BILLING CODE 4310–84–P

## DEPARTMENT OF THE INTERIOR

### Fish and Wildlife Service

### Notice of Updated Policy Regarding Harvest of Migratory Birds in Alaska Between March 10 and September 1

**AGENCY:** Fish and Wildlife Service, Interior.

**ACTION:** Notice.

**SUMMARY:** The Fish and Wildlife Service (Service) is updating the 1988 policy regarding subsistence harvest of migratory birds in Alaska. The policy is a statement regarding enforcement priorities the Service follows in Alaska to conserve waterfowl between March 10 and September 1. The original policy concentrated enforcement efforts on violations that have the most serious impacts on the resource, with particular emphasis on the protection of four diminished populations of geese: cackling Canada geese, emperor geese, Pacific white-fronted geese, and black brant. Due to the status of some eider populations, this updated policy also includes spectacled and Steller's eiders in this first priority protection. In addition, the policy prohibits wasting any migratory bird, using private and charter aircraft to assist in hunting, and possessing lead shot while hunting waterfowl.

In 1997, the United States Senate gave its advice and consent to ratification of two protocols amending, respectively, the 1916 Convention for the Protection of Migratory Birds in Canada and the United States (the ''Canada Treaty'') and the 1936 U.S.-Mexico Convention for the Protection of Migratory Birds and Game Mammals (the ''Mexico Treaty'') (together the ''Protocols''). These Protocols provide for legal, regulated spring subsistence hunting in Alaska. In particular, the Protocol with Canada provides in Article II that:

> In the case of the United States * * * [m]igratory birds and their eggs may be harvested by the indigenous inhabitants of the State of Alaska. Seasons and other regulations implementing the non-wasteful taking of migratory birds and the collection of their eggs by indigenous inhabitants of the State of Alaska shall be consistent with the customary and traditional uses by such indigenous inhabitants for their own nutritional and other essential needs.

Similarly, Article I of the Protocol with Mexico provides that:

The establishment of a closed season for wild ducks from the tenth of March to the first of September, except in the State of Alaska, United States of America, where wild ducks and their eggs may be harvested by the indigenous inhabitants thereof provided that seasons and other regulations implementing the non-wasteful taking of wild ducks and their eggs in such cases shall be consistent with the customary and traditional uses by such indigenous inhabitants for their own nutritional and other essential needs.

The Canada Protocol, which along with the Mexico Protocol will enter into force once the Parties exchange instruments of ratification, contemplates the establishment of management bodies in Alaska that will develop recommendations to the Service for specific hunting regulations. The Service is currently involved in an extensive public involvement process in Alaska to develop the required management bodies and the subsequent regulations allowing spring and summer harvest of migratory birds. The Service expects to have the management bodies in place in the year 2000 and specific hunting regulations in 2001. Until that time, consistent with the two Protocols and pursuant to existing statutory authority under 16 U.S.C. 712, this enforcement policy will guide our conservation measures.

**DATES:** The Service's policy regarding harvest of migratory birds in Alaska during the closed season became effective on April 22, 1988. The policy, as updated, will remain in effect until regulations are promulgated to implement the 1997 Protocols to the migratory bird treaties with Canada and Mexico.

**ADDRESSES:** Address correspondence to: Regional Director, U.S. Fish and Wildlife Service, 1011 E. Tudor Road, Anchorage, Alaska 99503.

**FOR FURTHER INFORMATION CONTACT:** Mimi Hogan, Migratory Bird Subsistence Coordinator, (907) 786–3673; or John Gavitt, Assistant Regional Director, Division of Law Enforcement, (907) 786–3311.

**SUPPLEMENTARY INFORMATION:** In the **Federal Register** dated December 31, 1987, the Service gave notice of, and invited public comments on, a proposed policy statement regarding subsistence taking of migratory birds in Alaska during the closed season as required by the 1918 Treaty Act (16 U.S.C. 703 *et seq.*) and implemented by regulations. The notice also terminated a proposed rulemaking announced to the public on May 19, 1986, (51 FR 18349) to permit and regulate subsistence hunting for migratory birds in Alaska. The rulemaking was halted by an October 9, 1987, ruling from the U.S. Court of Appeals for the Ninth Circuit that any regulations for subsistence hunting of migratory birds promulgated pursuant to the 1978 Fish and Wildlife Improvement Act must be in accordance with the Canada Treaty implemented by the Treaty Act. The Canada Treaty specifically prohibits hunting for most migratory birds between March 10 and September 1. Finally, the notice indicated Service support for continuation of a Yukon-Kuskokwim Delta Goose Management Plan, a cooperative management agreement for the conservation of geese that nest primarily in western Alaska.

Following the court decision, the Service worked toward legalizing subsistence harvest in Alaska during the closed season by proposing amendments to the Canada Treaty and the Mexico Treaty. The U.S. Senate gave its advice and consent to ratification of the Protocols on October 23, 1997, paving the way for ratification and a regulatory process to ensure proper implementation of these amendments.

Issuance by the Service of a law enforcement policy is not subject to the notice and comment procedures of the Administrative Procedures Act. However, the legal status of subsistence hunting in Alaska was for years the subject of litigation that was confusing to the public. In light of this, and because of great interest in the issue and need for understanding of the policy, the Service believed that it would be beneficial in this instance to provide for public review of the proposed policy. Public comments were reviewed in the Final Policy Statement (53 FR 16878).

## Need for Policy and Relation to Yukon-Kuskokwim Delta Goose Management Plan

The Treaty Act prohibits the taking of migratory birds except as permitted by regulations published by the Service. The Treaty Act further requires that the regulations must be consistent with the provisions of the 1916 Canada Treaty. Accordingly, the Service publishes regulations annually that establish open seasons and bag limits for migratory game birds within the September 1 to March 10 period provided by that treaty. Except in Alaska, the Service has always strictly enforced the prohibitions against taking migratory birds during closed seasons; that is, during those times of year outside the hunting seasons established in the annual hunting regulations.

The Service has recognized for many years that residents of certain rural areas in Alaska depend on waterfowl and some other migratory birds as customary and traditional sources of food, primarily during spring and early summer. Because of this long established dependence, the Service generally has exercised its discretion to not strictly enforce the closed season in these areas provided that subsistence harvest of a particular species will not adversely affect its populations and that birds are not wasted. The Service recognizes the need for conservation measures to protect those species where population levels are of concern or are most susceptible to declines.

Since 1984, efforts to halt declines of the four populations of geese on the Yukon-Kuskokwim Delta have been undertaken pursuant to a Yukon-Kuskokwim Delta Goose Management Plan which has been renewed annually until 1995, and biannually since then. The biannual renewal of the plan is an essential element in the conservation of the geese on their nesting grounds. It retains an established mechanism for communication with the subsistence hunters most affected by the policy and encourages the cooperation needed to achieve population objectives incorporated into previous plans. This cooperative management includes provisions to reduce sport harvest of these species and to reduce or minimize subsistence harvest that is not in accordance with the Plan. The Service views the plan as an effective mechanism in providing for cooperative management of geese on the Yukon-Kuskokwim Delta, and has therefore applied similar provisions to the policy that applies throughout the remainder of the state.

The Closed Season Enforcement Policy in Alaska, in accordance with the Yukon-Kuskokwim Delta Management Plan, has changed somewhat from the original policy as populations of cackling Canada geese and Pacific white-fronted geese have increased. The updated policy reflects these population changes. In addition, there have been changes concerning other species.

The spectacled eider was listed in 1993 as a threatened species under the Endangered Species Act of 1973, as amended, primarily on the basis of estimates that the number of nesting pairs on the Yukon-Kuskokwim Delta declined over 96% between the 1970s and the 1990s. The Alaska population of Steller's eider was listed as a threatened species in 1997 because of a decline in the number of birds breeding in Alaska. Spectacled and Steller's eiders were added to the list of species to receive special enforcement concern under the Service's closed season policy. In 1997, a Spectacled and Steller's Eider Management Plan, containing similar enforcement provisions, was added as

an attachment to the Yukon-Kuskokwim Delta Goose Management Plan.

The Service recognizes that among subsistence users there is a wide range in the level of understanding of the impacts of spring and summer harvest of waterfowl and the need to reduce mortality, especially when populations become depressed. The Service will continue educational efforts to expand the understanding of this relationship and will consider the varying levels of understanding when carrying out enforcement efforts on a statewide basis.

The Protocols allow regulations to be written opening the season on subsistence harvest of migratory birds between March 10 and September 1. The process to develop regulations is currently in progress and is expected to result in the establishment of management bodies in 2000 and specific hunting regulations in 2001. In the meantime, this Enforcement Policy will guide conservation.

**Closed Season Enforcement Policy in Alaska**

The enforcement policy described below applies only during the closed season, between March 10 and September 1. The policy applies only to residents of rural areas in Alaska where people have long relied on locally harvested waterfowl for food during spring and summer. On the Yukon-Kuskokwim Delta, we will engage in enforcement actions in accordance with the Yukon-Kuskokwim Delta Goose Management Plan. In areas other than those described above, we will enforce the closed season and all other regulations for hunting migratory birds from September 1 to March 10 as throughout the rest of the nation.

Service enforcement efforts in Alaska during the closed season will concentrate on violations that have the most serious impacts on the resource. We will give special attention to the protection of spectacled and Steller's eiders, cackling Canada geese, emperor geese, Pacific white-fronted geese, and black brant. These species have suffered severe population declines in recent years and need special protection.

Although all waterfowl hunters in Alaska have been required to use non-toxic shot since 1991, this has not been an enforcement priority in the past with regard to subsistence hunting. However, recent studies have confirmed lead shot poisoning in spectacled eiders and other species of waterfowl harvested by subsistence hunters in Alaska. Therefore anyone possessing lead shot while waterfowl hunting will be subject to enforcement action, regardless of time or place.

Under the Closed Season Policy we will give enforcement priority to the following violations:

- No taking of spectacled or Steller's eiders at any time;
- No taking of emperor geese at any time;
- No taking of cackling Canada geese or black brant during the nesting, brood-rearing, and flightless period;
- No taking of Pacific white-fronted geese, in the coastal areas of western Alaska south of Norton Sound, during the nesting, brood-rearing, and flightless periods;
- No taking of the eggs of spectacled or Steller's eiders, emperor geese, cackling Canada geese or black brant;
- No wasting of any migratory bird;
- No use of private or charter aircraft to assist hunting of any migratory bird;
- No possession or use of lead shot while hunting waterfowl.

Status of populations will guide identification of circumstances warranting additional protection for migratory birds during the closed season. This will involve consultation with affected interests. Of greatest concern will be situations involving continuing harvest of species of concern, waste or harvest exceeding reasonable levels of need under existing circumstances.

Dated: August 20, 1999.

**David B. Allen,**

*Regional Director, Anchorage, Alaska.*

[FR Doc. 99–22652 Filed 8–30–99; 8:45 am]

BILLING CODE 4310–55–P

---

## DEPARTMENT OF THE INTERIOR

## Bureau of Land Management

**[CO–700–5101–00–CO21; COC–62716]**

## Notice of Intent To Prepare an Environmental Impact Statement (EIS) for Construction of Pipeline Facilities and Transportation of Refined Petroleum Products via Under-ground Pipeline in San Juan County, New Mexico; La Plata, Montezuma, Dolores, San Miguel, Montrose, Delta and Mesa Counties, Colorado

**AGENCY:** Bureau of Land Management, Interior.

**ACTION:** Notice of intent to prepare an Environmental Impact Statement (EIS).

**SUMMARY:** Pursuant to Section 102(2)(C) of the National Environmental Policy Act (NEPA) of 1969, the Bureau of Land Management (BLM), Southwest Center Office, Montrose, Colorado, will be the lead office and will direct the preparation of an EIS on the Impacts of construction of a proposed pipeline for the transportation of refined petroleum products, located on public land, National Forest System land, and private land in northwest New Mexico and southwest Colorado. The U.S. Forest Service, San Juan and Grand Mesa, Uncompahgre and Gunnison National Forests, will be participating in the EIS preparation as cooperating agencies in accordance with Title 40, Code of Federal Regulations, Section 1501.6. The EIS may also address the potential to place future utility projects in portions of an existing utility corridor in New Mexico and Colorado.

**SUPPLEMENTARY INFORMATION:** Navajo Pipeline Company has proposed to construct a new 232 mile 12.75 inch diameter pipeline and transport refined petroleum products from Bloomfield, NM to a terminal distribution facility in Grand Junction, CO. The refined petroleum products could include diesel fuel, fuel oil, jet fuel, and gasoline. Navajo Pipeline Company would use the pipeline to distribute products to distinct markets in western Colorado. The proposed pipeline route would parallel and use the existing TransColorado Pipeline Corridor for approximately 210 miles. The proposed pipeline would utilize new corridor for approximately 4 miles near Bloomfield, NM, and for approximately 18 miles from Whitewater, CO to Grand Junction, CO. Other appurtenant pipeline facilities may include four new pump stations located in Colorado, check valves (approximately every 10 to 15 miles), cathodic protection systems, serial markers, scraper launchers, traps, and minor road maintenance. The BLM is preparing an EIS to analyze the effects of the proposed pipeline and appurtenant facilities in New Mexico and Colorado.

Tentatively identified issues of concern may include cultural resources, wildlife, water resources, land use, socioeconomics, visual resources, slope stability and corridor capacity. The EIS will analyze the Proposed Action and No-Action Alternatives. Other alternatives may include different routes for portions of the pipeline, optional sites for pipeline facilities, as well as mitigating measures to minimize impacts. A Record of Decision will be issued for the Navajo Pipeline Proposal.

Tentative Project Schedule:

Begin Public Comment Period—August 1999
Hold Scoping Meetings—September 1999
File Draft EIS—January 2000
File Final EIS—April 2000
Record of Decision—May 2000

**Public Comment Period**

The comment period for scoping of the EIS will commence with publication of this notice. Written comments must be submitted on or before October 8, 1999. Comments concerning the Proposed Action and EIS should address issues to be considered, feasible alternatives to examine, possible mitigation, and information relevant to or having bearing on the Proposed Action. Several public scoping meetings will be held during the month of September to receive oral comments. Dates, times and locations of the public meetings will be announced later and published in newspapers.

**ADDRESSES:** Written comments should be sent to Paul Peck, Navajo Pipeline Project Manager, Public Lands Office, 15 Burnett Ct., Durango, CO 81301, or email: navajopipeline/r2__sanjuan@fs.fed.us.

**FOR FURTHER INFORMATION CONTACT:** Paul Peck (970) 385–1234.

Dated: August 23, 1999.

**Mark W. Stiles,**

*SW Center Manager.*

[FR Doc. 99–22527 Filed 8–30–99; 8:45 am]

BILLING CODE 4310–JB–P

---

## DEPARTMENT OF THE INTERIOR

## Bureau of Land Management

**[AK–932–1410–01; F–07195]**

## Public Land Order No. 7408; Partial Revocation of Air Navigation Site No. 172; Alaska

**AGENCY:** Bureau of Land Management, Interior.

**ACTION:** Public Land Order.

**SUMMARY:** This order partially revokes a Secretarial Order dated December 31, 1941, as amended, insofar as it affects 7.21 acres of public lands withdrawn for use of the Department of Commerce in the maintenance of air navigation facilities at Galena. The lands are no longer needed for the purpose for which they were withdrawn. This action would allow the conveyance of the lands to the State of Alaska, if such lands are otherwise available. Lands described herein that are not conveyed to the State will be subject to the terms and conditions of Public Land Order No. 5180, as amended, and any other withdrawal or segregation of record.

**EFFECTIVE DATE:** August 31, 1999.

**FOR FURTHER INFORMATION CONTACT:** Shirley J. Macke, Bureau of Land Management, Alaska State Office, 222 W. 7th Avenue, No. 13, Anchorage, Alaska 99513–7599, 907–271–5049.

By virtue of the authority vested in the Secretary of the Interior by Section 204 of the Federal Land Policy and Management Act of 1976, 43 U.S.C. 1714 (1994), and by Section 17(d)(1) of the Alaska Native Claims Settlement Act, 43 U.S.C. 1616(d)(1) (1994), it is ordered as follows:

1. The Secretarial Order dated December 31, 1941, as amended, which withdrew public land for Air Navigation Site No. 172, is hereby revoked insofar as it affects the following described lands:

**Kateel River Meridian, Alaska**

T. 9 S., R. 10 E.,
U.S. Survey No. 6664, lots 11 and 13.
The areas described aggregate 7.21 acres.

2. The State of Alaska application for selection made under Section 6(b) of the Alaska Statehood Act of July 7, 1958, 48 U.S.C. note prec. 21 (1994), and under Section 906(e) of the Alaska National Interest Lands Conservation Act, 43 U.S.C. 1635(e) (1994), becomes effective without further action by the State upon publication of this public land order in the **Federal Register**, if such lands are otherwise available. Land not conveyed to the State will be subject to the terms and conditions of Public Land Order No. 5180, as amended, and any other withdrawal or segregation of record.

Dated: August 12, 1999.

**John Berry,**

*Assistant Secretary of the Interior.*

[FR Doc. 99–22546 Filed 8–30–99; 8:45 am]

BILLING CODE 4310–JA–P

---

## DEPARTMENT OF THE INTERIOR

## Bureau of Land Management

**[CA–940–5700–00; CACA 38601]**

## Public Land Order No. 7406; Withdrawal of National Forest System Land for the Soda Rock Special Interest Area; California

**AGENCY:** Bureau of Land Management, Interior.

**ACTION:** Public land order.

**SUMMARY:** This order withdraws 40 acres of National Forest System land from location and entry under the United States mining laws for 50 years to protect the Soda Rock Special Interest Area. The land has been and will remain open to mineral leasing.

**EFFECTIVE DATE:** August 31, 1999.

**FOR FURTHER INFORMATION CONTACT:** Duane Marti, BLM California State Office, 2800 Cottage Way, Sacramento, California 95825–1886, 916–978–4675.

By virtue of the authority vested in the Secretary of the Interior by Section 204 of the Federal Land Policy and Management Act of 1976, 43 U.S.C. 1714 (1994), it is ordered as follows:

1. Subject to valid existing rights, the following described National Forest System land is hereby withdrawn from location and entry under the United States mining laws (30 U.S.C. Ch. 2 (1994)), but not from leasing under the mineral leasing laws, to protect the Soda Rock Special Interest Area:

**Mount Diablo Meridian**

Plumas National Forest

T. 25 N., R. 9 E.,
Sec. 3, SW¼SW¼.
The area described contains 40 acres in Plumas County.

2. The withdrawal made by this order does not alter the applicability of those land laws governing the use of the National Forest System land under lease, license, or permit, or governing the disposal of their mineral or vegetative resources other than under the mining laws.

3. This withdrawal will expire 50 years from the effective date of this order unless, as a result of a review conducted before the expiration date pursuant to Section 204(f) of the Federal Land Policy and Management Act of 1976, 43 U.S.C. 1714(f) (1994), the Secretary determines that the withdrawal shall be extended.

Dated: August 12, 1999.

**John Berry,**

*Assistant Secretary of the Interior.*

[FR Doc. 99–22547 Filed 8–30–99; 8:45 am]

BILLING CODE 4310–40–P

---

## DEPARTMENT OF THE INTERIOR

## Bureau of Land Management

**[CO–930–1430–01; COC 012292]**

## Public Land Order No. 7407; Partial Revocation of Public Land Order No. 1742, Colorado

**AGENCY:** Bureau of Land Management, Interior.

**ACTION:** Public Land Order.

**SUMMARY:** This order partially revokes Public Land Order No. 1742 insofar as it affects 1,522.85 acres of National Forest System lands withdrawn for the State Highway 14 Roadside Zone. The lands are no longer needed for this purpose and the revocation is needed to make a portion of the lands available for exchange and to remove the unneeded withdrawal from the records. This action will open the lands to such forms

of disposition as may by law be made of National Forest System lands and to mining, subject to valid existing rights, the provisions of existing withdrawals, other segregations of record, and the requirements of applicable law. Most of the lands are located within the Cache la Poudre Wild and Scenic River area. The lands have been and will remain open to mineral leasing.

**EFFECTIVE DATE:** September 30, 1999.

**FOR FURTHER INFORMATION CONTACT:** Doris E. Chelius, BLM Colorado State Office, 2850 Youngfield Street, Lakewood, Colorado 80215–7076, 303–239–3706.

By virtue of the authority vested in the Secretary of the Interior by Section 204 of the Federal Land Policy and Management Act of 1976, 43 U.S.C. 1714 (1994), it is ordered as follows:

1. Public Land Order No. 1742, which withdrew National Forest System lands for the Forest Service's State Highway 14 Roadside Zone, is hereby revoked insofar as it affects the following described lands:

**Sixth Principal Meridian**

*Roosevelt National Forest*

A strip of land 200 feet on either side of the center line of Colorado State Highway No. 14 through the following legal subdivisions:

T. 8 N., R. 70 W.,
Sec. 4, SW¼NW¼;
Sec. 5, NE¼NE¼.
T. 9 N., 70 W.,
Sec. 31, S½SW¼.
T. 8 N., 71 W.,
Sec. 1, N½SE¼;
Sec. 2, W½SE¼ and N½SW¼;
Sec. 3, N½ and NE¼SE¼;
Sec. 4, SE¼NE¼ and N½S½;
Sec. 5, SW¼NE¼ and W½;
Sec. 6, SE¼SE¼.
T. 8 N., R. 72 W.,
Sec. 1, SW¼SE¼ and SE¼SW¼;
Sec. 2, W½;
Sec. 3, W½ and W½SE¼;
Sec. 4, S½SE¼ and SE¼SW¼;
Sec. 5, N½, N½SE¼, and SE¼SE¼;
Sec. 6, N½;
Sec. 8, E½NE¼;
Sec. 9, NW¼;
Sec. 10, NW¼NW¼;
Sec. 11, N½;
Sec. 12, N½ and NW¼SW¼.
T. 9 N., R. 72 W.,
Sec. 34, SW¼SW¼;
Sec. 35, SW¼SW¼.
T. 8 N., R. 73 W.,
Sec. 1, NE¼.
T. 9 N., R. 73 W.,
Sec. 31, NW¼SW¼;
Sec. 32, NE¼SE¼;
Sec. 34, S½N½.
T. 9 N., R. 74 W.,
Sec. 30, W½SE¼ and NE¼SW¼;
Sec. 31, NW¼NE¼;
Sec. 32, NE¼SE¼;
Sec. 33, SE¼SE¼ and NW¼SW¼;
Sec. 34, SE¼, NE¼SW¼, and SW¼SW¼;
Sec. 35, N½SW¼.
T. 7 N., R. 75 W.,
Sec. 5, NW¼NE¼ and E½NW¼;
Sec. 7, W½E½ and E½W½;
Sec. 18, NW¼ and NW¼SW¼.
T. 8 N., R. 75 W.,
Sec. 2, SE¼NE, NE¼SE¼, and SW¼SE¼;
Sec. 9, SE¼SE¼;
Sec. 10, NE¼SE¼ and SW¼SW¼;
Sec. 11, NW¼NE¼, E½NW¼, and SW¼NW¼;
Sec. 16, E½ and E½SW¼;
Sec. 21, E½;
Sec. 28, E½NE¼, SE¼SW¼, and SE¼;
Sec. 32, S½SE¼;
Sec. 33, W½.
T. 9 N., R. 75 W.,
Sec. 36, NE¼NE¼.
T. 6 N., R. 76 W.,
Sec. 2, E½NW¼.
T. 7 N., R. 76 W.,
Sec. 13, E½SE¼;
Sec. 24, NE¼, E½SW¼, and NW¼SE¼;
Sec. 25, W½W½ and NE¼NW¼;
Sec. 26, E½SE¼;
Sec. 35, NE¼, E½SW¼, and NW¼SE¼.

The areas described aggregate 1,522.85 acres in Jackson and Larimer Counties.

2. At 9 a.m. on September 30, 1999, the lands described above, except those located within the Cache la Poudre Wild and Scenic River designated area, shall be opened to such forms of disposition as may by law be made of National Forest System lands, including location and entry under the United States mining laws, subject to valid existing rights, the provisions of existing withdrawals, other segregations of record, and the requirements of applicable law. Appropriation of lands described in this order under the general mining laws prior to the date and time of restoration is unauthorized. Any such attempted appropriation, including attempted adverse possession under 30 U.S.C. 38 (1994), shall vest no rights against the United States. Acts required to establish a location and to initiate a right of possession are governed by State law where not in conflict with Federal law. The Bureau of Land Management will not intervene in disputes between rival locators over possessory rights since Congress has provided for such determinations in local courts.

Dated: August 12, 1999.

**John Berry,**

*Assistant Secretary of the Interior.*

[FR Doc. 99–22545 Filed 8–30–99; 8:45 am]

BILLING CODE 4310–JB–P

## DEPARTMENT OF THE INTERIOR

## National Park Service

## National Register of Historic Places; Notification of Pending Nominations

Nominations for the following properties being considered for listing in the National Register were received by the National Park Service before August 21, 1999.

Pursuant to section 60.13 of 36 CFR part 60 written comments concerning the significance of these properties under the National Register criteria for evaluation may be forwarded to the National Register, National Park Service, 1849 C St. NW, NC400, Washington, DC 20240. Written comments should be submitted by September 15, 1999.

**Paul R. Lusignan,**

*Acting Keeper of the National Register.*

**COLORADO**

**Arapahoe County**

*Owen Estate,* 3901 S. Gilpin St., Cherry Hills Village, 99001143

**Garfield County**

*Missouri Heights School* (Rural School Buildings in Colorado MPS), Cty Rd. 102, 0.5 mi. E of jct. with Cty Rd. 100, Carbondale vicinity, 99001145

**Gunnison County**

*Marble City State Bank Building,* 105 W. Main St., Marble, 99001146

**Routt County**

*Hayden Rooming House,* 295 S. Poplar St., Hayden, 99001144

**FLORIDA**

**Gadsden County**

*Planter's Exchange, Inc.,* 204 Second St., NW, Hanvna, 99001147

**Orange County**

*Winter Park Country Club and Golf Course,* 761 Old England Ave., Winter Park, 99001148

**INDIANA**

**Benton County**

*Heath, David S., House,* 202 W. McConnell, Oxford, 99001153

**Cass County**

*Bankers Row Historic District,* Eel River Ave., from Market to Third, Logansport, 99001149

*Point Historic District,* roughly bet. Eel River Ave., Third St., and E. Melbourne Ave., Logansport, 99001150

**Clay County**

*Clay County Hospital,* 1200 E. National Ave., Brazil, 99001154

**Henry County**

*Chrysler Enclosure,* Address Restricted, New Castle vicinity, 99001156

**Lake County**

*State Street Commercial Historic District,* Roughly State St., bet. Sohl and Bulletin Ave., Hammond, 99001157

**Ohio County**

*Clore Plow Works—J.W. Whitlock and Company,* 212 S. Walnut St., Rising Sun, 99001152

**Pulaski County**

*Mallon Building,* 102 E. Montgomery St., Francesville, 99001151

**Wayne County**

*Birdsall, Mary, House,* 504 North West Fifth St., Richmond, 99001155

**MISSOURI**

**Benton County**

*Upper Bridge,* Old Highway A, over Osage River, Warsaw vicinity, 99001159

**Jackson County**

*Walnut Street Warehouse and Commercial Historic District,* Roughly bounded by Main St., 15th St., Grand St. and 17th St., Kansas City, 99001158

**St. Louis Independent City**

*Antioch Baptist Church* (The Ville, St. Louis, Missouri MPS), 4213 N. Market St., St. Louis, 99001166

*Charles Turner Open Air School* (The Ville, St. Louis, Missouri MPS), 4235 W. Kennerly Ave., St. Louis, 99001165

*Marshall School* (The Ville, St. Louis, Missouri MPS); 4342 Aldine Ave., St. Louis, 99001162

*Simmons Colored School* (The Ville, St. Louis, Missouri MPS), 4306–4318 St. Louis Ave., St. Louis, 99001163

*St. Louis Colored Orphans Home* (The Ville, St. Louis, Missouri MPS), 2612 Annie Malone Dr., St. Louis, 99001164

*Stowe Teachers College* (The Ville, St. Louis, Missouri MPS), 2615 Billups, St. Louis, 99001161

Tandy Community Center (The Ville, St. Louis, Missouri MPS), 4206 W. Kennerly Ave., St. Louis, 99001160

**NEBRASKA**

**Lancaster County**

*Hurlbut, Aeneas—Yates, Charles, House,* 720 S. 16th St., Lincoln, 99001167

**NEW JERSEY**

**Middlesex County**

*Randolphville Bridge,* Near 618 S. Randolphville Rd., Piscataway, 99001169

**Passaic County**

*Rea, John W., House,* 675 Goffle Rd., Hawthorne, 99001168

**Warren County**

*Vass Farmstead,* 109 Stillwater Rd., Hardwick vicinity, 99001170

**NEW MEXICO**

**Eddy County**

*Abo Elementary School and Fallout Shelter,* 1802 Center Ave., Artesia, 99001171

**San Miguel County**

*King, Norman L., Memorial Stadium* (New Deal in New Mexico MPS), 2.7 mi. NW of jct. of NM 65 and Mill Ave., Las Vegas vicinity, 99001172

**WISCONSIN**

**Dane County**

*Tenney Park—Yahara River Parkway,* 1220 E. Johnson St.; 501 S. Thornton Ave., Madison, 99001173

**Grant County**

*Wyalusing State Park Mounds Archeological District* (Late Woodland Stage in Archeological Region 8 MPS), 13342 Cty. Hwy. C, Bagley vicinity, 99001175

**Winnebago County**

*Mayer—Bankerob House,* 809 Ceape Ave., Oshkosh, 99001174

A request for removal has been made for the following resources:

**ARKANSAS**

**Chicot County**

*Bunker House,* AR 159 W of jct. with US 65/82, Lake Village, 92001622

**Pike County**

*O'Neel-Blackburn House,* W of Daisy off US 70, Daisy, 76000446

**Sharp County**

*Cochran Store* (Evening Shade MRA), Main St., Evening Shade, 82002133

*Herrn House* (Evening Shade MRA), W. Main St., Evening Shade, 76000469

[FR Doc. 99–22620 Filed 8–30–99; 8:45 am]

BILLING CODE 4310–70–P

## DEPARTMENT OF THE INTERIOR

### Bureau of Reclamation

### Glen Canyon Technical Work Group

**AGENCY:** Bureau of Reclamation, Interior.

**ACTION:** Notice of public meeting.

**SUMMARY:** The Glen Canyon Technical Work Group (TWG) was formed as an official subcommittee of the Glen Canyon Dam Adaptive Management Work Group (AMWG). The TWG members were named by members of the AMWG and provide advice and information for the AMWG to act upon. The AMWG uses this information to form recommendations to the Secretary of the Interior for guidance of the Grand Canyon Monitoring and Research Center (GCMRC) science program, and other direction as requested by the Secretary.

**DATES AND LOCATIONS:** The Glen Canyon Technical Work Group will conduct an open public meeting as follows:

*Phoenix, Arizona—September 7–8, 1999.* The meeting will begin at 9:30 a.m. and conclude at 5:00 p.m. on the first day and begin at 8:00 a.m. and conclude at 3:00 p.m. on the second day. The meeting will be held at the Arizona Department of Water Resources Office, Conference Room A (3rd Floor), 500 North 3rd Street, Phoenix, Arizona.

**ADDRESSES:** Randall Peterson, Bureau of Reclamation, Upper Colorado Regional Office, 125 South State Street, Room 6107, Salt Lake City, Utah 84138–1102; telephone (801) 524–3758; faxogram (801) 524–3858; E-mail at: rpeterson@uc.usbr.gov

**FOR FURTHER INFORMATION CONTACT:** Randall Peterson, telephone (801) 524–3758; faxogram (801) 524–3858; E-mail at: rpeterson@uc.usbr.gov.

**SUPPLEMENTARY INFORMATION:** The purpose of the meeting is to discuss administrative issues, environmental compliance issues, the fiscal year 2001 GCMRC work plan, the Adaptive Management Program strategic plan, and Ad Hoc group reports. In addition, the following items will be discussed: SWCA Synthesis Report, Protocol Evaluation Panel Sediment Workshop, State of the Natural and Cultural Resources Report, and other TWG activities.

Time will be allowed on the agenda for any individual or organization wishing to make formal oral comments (limited to 10 minutes) at the meeting. To allow full consideration of information by the TWG members, written notice must be provided to Randall Peterson at the address above (see **ADDRESSES**) at least five (5) days prior to the meeting. Any written comments received will be provided to the TWG members at the meeting.

Dated: August 26, 1999.

**Eluid Martinez,**

*Commissioner, Bureau of Reclamation.*

[FR Doc. 99–22653 Filed 8–30–99; 8:45 am]

BILLING CODE 4310–94–P

## INTERNATIONAL TRADE COMMISSION

### Sunshine Act Meeting

**AGENCY HOLDING THE MEETING:** United States International Trade Commission.

**TIME AND DATE:** September 3, 1999 at 10:00 a.m.

**PLACE:** Room 101, 500 E Street SW., Washington, DC 20436, Telephone: (202) 205–2000.

**STATUS:** Open to the public.

**MATTERS TO BE CONSIDERED:**

1. Agenda for future meeting: None.
2. Minutes.
3. Ratification List.
4. Inv. No. 731–TA–856 (Preliminary) (Ammonium Nitrate from Russia)—

briefing and vote. (The Commission will transmit its determination to the Secretary of Commerce on September 7, 1999.)

5. Inv. No. 731–TA–384 (Review) (Nitrile Rubber from Japan)—briefing and vote. (The Commission will transmit its determination to the Secretary of Commerce on September 10, 1999.)

6. Outstanding action jackets: None.

In accordance with Commission policy, subject matter listed above, not disposed of at the scheduled meeting, may be carried over to the agenda of the following meeting.

By order of the Commission.

Issued: August 25, 1999.

**Donna R. Koehnke,**

*Secretary.*

[FR Doc. 99–22762 Filed 8–27–99; 2:16 pm]

BILLING CODE 7020–02–M

## DEPARTMENT OF JUSTICE

### Immigration and Naturalization Service

### Agency Information Collection Activities: Proposed Collection; Comment Request

**ACTION:** Notice of information collection under review: Applicant Survey.

The Department of Justice, Immigration and Naturalization Service (INS) has submitted the following information collection request for review and clearance in accordance with the Paperwork Reduction Act of 1995. The proposed information collection in published to obtain comments from the public and affected agencies. Comments are encouraged and will be accepted for ''sixty-days'' until November 1, 1999.

Written comments and suggestions from the public and affected agencies concerning the proposed collection of information should address one or more of the following four points:

(1) Evaluate whether the proposed collection of information is necessary for the proper performance of the functions of the agency, including whether the information will have practical utility;

(2) Evaluate the accuracy of the agency's estimate of the burden of the proposed collection of information, including the validity of the methodology and assumption used;

(3) Enhance the quality, utility, and clarity of the information to be collected; and

(4) Minimize the burden of the collection of information on those who are to respond, including through the use of appropriate automated, electronic, mechanical, or other technological collection techniques or other forms of information technology, e.g., permitting electronic submission of responses.

Overview of this information collection:

(1) *Type of Information Collection:* Extension of a currently approved collection.

(2) *Title of the Form/Collection:* Applicant Survey.

(3) *Agency form number, if any, and the applicable component of the Department of Justice sponsoring the collection:* Form G–942. Human Resources Branch, Immigration and Naturalization Service.

(4) *Affected public who will be asked or required to respond, as well as a brief abstract:* Primary: Individual or households. This form is required to ensure compliance with Federal laws and regulations which mandate equal opportunity in the recruitment of applicants for Federal employment.

(5) *An estimate of the total number of respondents and the amount of time estimated for an average respondent to respond:* 75,000 responses at 4 minutes (.066 hours) per response.

(6) *An estimate of the total public burden (in hours) associated with the collection:* 4,950 annual burden hours.

If you have additional comments, suggestions, or need a copy of the proposed information collection instrument with instructions, or additional information, please contact Richard A. Sloan 202–514–3291, Director, Policy Directives and Instructions Branch, Immigration and Naturalization Service, U.S. Department of Justice, Room 5307, 425 I Street, NW., Washington, DC 20536. Additionally, comments and/or suggestions regarding the item(s) contained in this notice, especially regarding the estimated public burden and associated response time may also be directed to Mr. Richard A. Sloan.

If additional information is required contact: Mr. Robert B. Briggs, Clearance Officer, United States Department of Justice, Information Management and Security Staff, Justice Management Division, Suite 850, Washington Center, 1001 G Street, NW, Washington, DC 20530.

Dated: August 25, 1999.

**Richard A. Sloan,**

*Department Clearance Officer, United States Department of Justice, Immigration and Naturalization Service.*

[FR Doc. 99–22538 Filed 8–30–99; 8:45 am]

BILLING CODE 4410–10–M

## DEPARTMENT OF JUSTICE

### Immigration and Naturalization Service

### Agency Information Collection Activities: Proposed Collection; Comment Request

**ACTION:** Notice of information collection under review: Petition for Alien Fiance(e).

The Department of Justice, Immigration and Naturalization Service (INS) has submitted the following information collection request for review and clearance in accordance with the Paperwork Reduction Act of 1995. The proposed information collection is published to obtain comments from the public and affected agencies. Comments are encouraged and will be accepted for ''sixty-days'' until November 1, 1999.

Written comments and suggestions from the public and affected agencies concerning the proposed collection of information should address one or more of the following four points:

(1) Evaluate whether the proposed collection of information is necessary for the proper performance of the functions of the agency, including the information will have practical utility;

(2) Evaluate the accuracy of the agency's estimate of the burden of the proposed collection of information, including the validity of the methodology and assumptions used;

(3) Enhance the quality, utility, and clarity of the information to be collected; and

(4) Minimize the burden of the collection of information on those who are to respond, including through the use of appropriate automated, electronic, mechanical, or other technological collection techniques or other forms of information technology, e.g., permitting electronic submission of responses.

Overview of this information collection:

(1) *Type of Information Collection:* Extension of a currently approved collection.

(2) *Title of the Form/Collection:* Petition for Alien Fiance(e).

(3) *Agency form number, if any, and the applicable component of the Department of Justice sponsoring the collection:* Form I–129F. Adjudications Division, Immigration and Naturalization Service.

(4) *Affected public who will be asked or required to respond, as well as a brief abstract:* Primary: Individual or households. Through the filing of this form a United States citizen may facilitate the entry of his/her fiance(e)

into the United States so that a marriage may be conclude within 90 days of entry between the U.S. citizen and the beneficiary of the petition.

(5) *An estimate of the total number of respondents and the amount of time estimated for an average respondent to respond:* 20,000 responses at 30 minutes (.50 hours) per response.

(6) *An estimate of the total public burden (in hours) associated with the collection:* 10,000 annual burden hours.

If you have additional comments, suggestions, or need a copy of the proposed information collection instrument with instructions, or additional information, please contact Richard A. Sloan 202–514–3291, Director, Policy Directives and Instructions Branch, Immigration and Naturalization Service, U.S. Department of Justice, Room 5307, 425 I Street, NW., Washington, DC 20536. Additionally, comments and/or suggestions regarding the item(s) contained in this notice, especially regarding the estimated public burden and associated response time may also be directed to Mr. Richard A. Sloan.

If additional information is required contact: Mr. Robert B. Briggs, Clearance Officer, United States Department of Justice, Information Management and Security Staff, Justice Management Division, Suite 850, Washington Center, 1001 G Street, NW, Washington, DC 20530.

Dated August 25, 1999.

**Richard A. Sloan,**

*Department Clearance Officer, United States Department of Justice, Immigration and Naturalization Service.*

[FR Doc. 99–22539 Filed 8–30–99; 8:45 am]

BILLING CODE 4410–10–M

## DEPARTMENT OF JUSTICE

### Immigration and Naturalization Service

### Agency Information Collection Activities: Proposed Collection; Comment Request

**ACTION:** Notice of information collection under review: Guam Visa Waiver Information.

The Department of Justice, Immigration and Naturalization Service (INS) has submitted the following information collection request for review and clearance in accordance with the Paperwork Reduction Act of 1995. The proposed information collection is published to obtain comments from the public and affected agencies. Comments are encouraged and will be accepted for ''sixty-days'' until November 1, 1999.

Written comments and suggestions from the public and affected agencies concerning the proposed collection of information should address one or more of the following four points:

(1) Evaluate whether the proposed collection of information is necessary for the proper performance of the functions of the agency, including whether the information will have practical utility;

(2) Evaluate the accuracy of the agency's estimate of the burden of the proposed collection of information, including the validity of the methodology and assumptions used;

(3) Enhance the quality, utility, and clarity of the information to be collected; and

(4) Minimize the burden of the collection of information on those who are to respond, including through the use of appropriate automated, electronic, mechanical, or other technological collection techniques or other forms of information technology, e.g., permitting electronic submission of responses.

Overview of this information collection:

(1) *Type of Information Collection:* Extension of a currently approved collection.

(2) *Title of the Form/Collection:* Guam Visa Waiver Information.

(3) *Agency form number, if any, and the applicable component of the Department of Justice sponsoring the collection:* Form I–736. Inspections Division, Immigration and Naturalization Service.

(4) *Affected public who will be asked or required to respond, as well as a brief abstract:* Primary: Individual or households. This form is used to record an alien's application for a waiver of the non-immigrant visa requirement for entry into Guam in compliance with 8 CFR 212.1(e).

(5) *An estimate of the total number of respondents and the amount of time estimated for an average respondent to respond:* 170,000 responses at 5 minutes (.083 hours) per response.

(6) *An estimate of the total public burden (in hours) associated with the collection:* 14,110 annual burden hours.

If you have additional comments, suggestions, or need a copy of the proposed information collection instrument with instructions, or additional information, please contact Richard A. Sloan 202–514–3291, Director, Policy Directives and Instructions Branch, Immigration and Naturalization Service, U.S. Department of Justice, Room 5307, 425 I Street, NW., Washington, DC 20536. Additionally, comments and/or suggestions regarding the item(s) contained in this notice, especially regarding the estimated public burden and associated response time may also be directed to Mr. Richard A. Sloan.

If additional information is required contact: Mr. Robert B. Briggs, Clearance Officer, United States Department of Justice, Information Management and Security Staff, Justice Management Division, Suite 850, Washington Center, 1001 G Street, NW, Washington, DC 20530.

Dated: August 25, 1999.

**Richard A. Sloan,**

*Department Clearance Officer, United States Department of Justice, Immigration and Naturalization Service.*

[FR Doc. 99–22540 Filed 8–30–99; 8:45 am]

BILLING CODE 4410–10–M

## DEPARTMENT OF JUSTICE

### Immigration and Naturalization Service

### Agency Information Collection Activities: Proposed Collection; Comment Request

**AGENCY:** Immigration and Naturalization Service, Department of Justice.

**ACTION:** Notice of Information Collection under Review: Application for Posthumous Citizenship.

The Department of Justice, Immigration and Naturalization Service (INS) has submitted the following information collection request for review and clearance in accordance with the Paperwork Reduction Act of 1995. The proposed information collection is published to obtain comments for the public and affected agencies. Comments are encouraged and will be accepted for ''sixty-days'' until November 1, 1999.

Written comments and suggestions from the public and affected agencies concerning the proposed collection of information should address one or more of the following four points:

(1) Evaluate whether the proposed collection of information is necessary for the proper performance of the functions of the agency, including whether the information will have practical utility;

(2) Evaluate the accuracy of the agency's estimate of the burden of the proposed collection of information, including the validity of the methodology and assumptions used;

(3) Enhance the quality, utility, and clarity of the information to be collected; and

(4) Minimize the burden of the collection of information on those who

are to respond, including through the use of appropriate automated, electronic, mechanical, or other technological collection techniques or other forms of information technology, e.g., permitting electronic submission of responses.

Overview of this information collection:

(1) *Type of Information Collection:* Extension of a currently approved collection.

(2) *Title of the Form/Collection:* Application of Posthumous Citizenship.

(3) *Agency form number, if any, and the applicable component of the Department of Justice sponsoring the collection:* Form N–644. Adjudications Division, Immigration and Naturalization Service.

(4) *Affected public who will be asked or required to respond, as well as a brief abstract:* Primary: Individual or households. The information collected will be used to determine an applicant's eligibility to request posthumous citizenship status for a decedent and to determine the decedent's eligibility for such status.

(5) *An estimate of the total number of respondents and the amount of time estimated for an average respondent to respond:* 50 responses at 1 hour and 50 minutes (1.83 hours) per response.

(6) *An estimate of the total public burden (in hours) associated with the collection:* 92 annual burden hours.

If you have additional comments, suggestions, or need a copy of the proposed information collection instrument with instructions, or additional information, please contact Richard A. Sloan 202–514–3291, Director, Policy directives and Instructions Branch, Immigration and Naturalization Service, US Department of Justice, room 5307, 425 I Street, NW, Washington, DC 20536. Additionally, comments and/or suggestions regarding the item(s) contained in this notice, especially regarding the estimated public burden and associated response time may also be directed to Mr. Richard A. Sloan.

If additional information is required contact: Mr. Robert B. Briggs, Clearance Officer, United States Department of Justice, Information Management and Security Staff, Justice Management Division, Suite 850, Washington Center, 1001 G Street, NW, Washington, DC 20530.

Dated: August 28, 1999.

**Richard A. Sloan,**

*Department Clearance Officer, United States Department of Justice, Immigration and Naturalization Service.*

[FR Doc. 99–22541 Filed 8–30–99; 8:45 am]

BILLING CODE 4410–10–M

## DEPARTMENT OF JUSTICE

### Immigration and Naturalization Service

### Agency Information Collection Activities: Proposed Collection; Comment Request

**AGENCY:** Immigration and Naturalization Service, Department of Justice.

**ACTION:** Notice of information collection under review: Arrival Departure Record (Transit Without Visa).

The Department of Justice, Immigration and Naturalization Service (INS) has submitted the following information collection request for review and clearance in accordance with the Paperwork Reduction Act of 1995. The proposed information collection is published to obtain comments from the public and affected agencies. Comments are encouraged and will be accepted for ''sixty-days'' until November 1, 1999.

Written comments and suggestions from the public and affected agencies concerning the proposed collection of information should address one or more of the following four points:

(1) Evaluate whether the proposed collection of information is necessary for the proper performance of the functions of the agency, including whether the information will have practical utility;

(2) Evaluate the accuracy of the agency's estimate of the burden of the proposed collection of information, including the validity of the methodology and assumptions used;

(3) Enhance the quality, utility, and clarity of the information to be collected; and

(4) Minimize the burden of the collection of information on those who are to respond, including through the use of appropriate automated, electronic, mechanical, or other technological collection techniques or other forms of information technology, e.g., permitting electronic submission of responses.

Overview of this information collection:

(1) *Type of Information Collection:* Extension of a currently approved collection.

(2) *Title of the Form/Collection:* Arrival Departure Record (Transit Without Visa).

(3) *Agency form number, if any, and the applicable component of the Department of Justice sponsoring the collection:* Form I–94T. Inspections Division, Immigration and Naturalization Service.

(4) *Affected public who will be asked or required to respond, as well as a brief abstract:* Primary: Individual or households. The information collection is used to track the arrival and departure of aliens under the Transit Without Visa program to ensure compliance with 8 CFR 212.1(f) and 8 CFR 214.2(c).

(5) *An estimate of the total number of respondents and the amount of time estimated for an average respondent to respond:* 200,000 responses at 4 minutes (.066 hours) per response.

(6) *An estimate of the total public burden (in hours) associated with the collection:* 13,200 annual burden hours.

If you have additional comments, suggestions, or need a copy of the proposed information collection instrument with instructions, or additional information, please contact Richard A. Sloan 202–514–3291, Director, Policy Directives and Instructions Branch, Immigration and Naturalization Service, U.S. Department of Justice, Room 5307, 425 I Street, NW, Washington, DC 20536. Additionally, comments and/or suggestions regarding the item(s) contained in this notice, especially regarding the estimated public burden and associated response time may also be directed to Mr. Richard A. Sloan.

If additional information is required contact: Mr. Robert B. Briggs, Clearance Officer, United States Department of Justice, Information Management and Security Staff, Justice Management Division, Suite 850, Washington Center, 1001 G Street, NW, Washington, DC 20530.

Dated: August 23, 1999.

**Richard A. Sloan,**

*Department Clearance Officer, United States Department of Justice, Immigration and Naturalization Service.*

[FR Doc. 99–22542 Filed 8–30–99; 8:45 am]

BILLING CODE 4410–10–M

## DEPARTMENT OF JUSTICE

### Immigration and Naturalization Service

### Agency information Collection Activities: Proposed Collection; Comment Request

**ACTION:** Notice of information collection under review: HRIFA Supplement to Form I–485 Instructions.

The Department of Justice, Immigration and Naturalization Service (INS) has submitted the following information collection request to the Office of Management and Budget (OMB) for review and clearance in accordance with the Paperwork Reduction Act of 1995. The information collection was previously published in

the **Federal Register** on April 2, 1999 at 64 FR 15990, allowing for emergency OMB review with a 60-day public comment period. No comments were received by the INS on this proposed information collection.

The purpose of this notice is to allow an additional 30 days for public comments. Comments are encouraged and will be accepted until September 30, 1999. This process is conducted in accordance with 5 CFR 1320.10.

Written comments and/or suggestions regarding the items contained in this notice, especially regarding the estimated public burden and associated response time, should be directed to the Office of Management and Budget, Office of Information and Regulatory Affairs, Attention: Stuart Shapiro, Department of Justice Desk Officer, Room 10235, Washington, DC 20530; 202–395–7316.

Written comments and suggestions from the public and affected agencies concerning the proposed collection of information should address one or more of the following four points:

(1) Evaluate whether the proposed collection of information is necessary for the proper performance of the functions of the agency, including whether the information will have practical utility;

(2) Evaluate the accuracy of the agency's estimate of the burden of the proposed collection of information, including the validity of the methodology and assumptions used;

(3) Enhance the quality, utility, and clarity of the information to be collected; and

(4) Minimize the burden of the collection of information on those who are to respond, including through the use of appropriate automated, electronic, mechanical, or other technological collection techniques or other forms of information technology, e.g., permitting electronic submission of responses.

Overview of this information collection:

(1) *Type of Information Collection:* Extension of currently approved collection.

(2) *Title of the Form/Collection:* HRIFA supplement to Form I–485 Instructions.

(3) *Agency form number, if any, and the applicable component of the Department of Justice sponsoring the collection:* Form I–485C. Office of Programs, Adjudications Division, Immigration and Naturalization Service.

(4) *Affected public who will be asked or required to respond, as well as a brief abstract:* Primary: Individuals or households. The information collected on this application will be used to determine whether an alien applying for adjustment of status under the provisions of section 902 of Division A, Title IX of Public Law 105–277, is eligible to become a permanent resident of the United States.

(5) *An estimate of the total number of respondents and the amount of time estimated for an average respondent to respond:* 50,000 responses at approximately 30 minutes (.50) hours per response.

(6) *An estimate of the total public burden (in hours) associated with the collection:* 25,000 annual burden hours.

If you have additional comments, suggestions or need a copy of the proposed information collection instrument with instructions, or additional information, please contact Richard A. Sloan, 202–514–3291, Director, Policy Directives and Instructions Branch, Immigration and Naturalization Service, U.S. Department of Justice, Room 5307, 425 I Street, NW, Washington, DC 20536. Additionally, comments and/or suggestions regarding the item(s) contained in this notice, especially regarding the estimated public burden and associated response time, may also be directed to Mr. Richard A. Sloan.

If additional information is required contact: Mr. Robert B. Briggs, Clearance Officer, United States Department of Justice Information Management and Security Staff, Justice Management Division, Suite 850, Washington Center, 1001 G Street, NW, Washington, DC 20530.

Dated: August 25, 1999.

**Richard A. Sloan,**

*Department Clearance Officer, United States Department of Justice, Immigration and Naturalization Service.*

[FR Doc. 99–22537 Filed 8–30–99; 8:45 am]

BILLING CODE 4410–10–M

## DEPARTMENT OF LABOR

### Employment and Training Administration

**[TA–W–36,108 and NAFTA—03104]**

### Sherman Lumber Company, Sherman Station, Maine; Notice of Affirmative Determination Regarding Application for Reconsideration

By letter of August 8, 1999, the petitioner requested administrative reconsideration of the Department of Labor's Notices of Negative Determination Regarding Eligibility to Apply for Worker Adjustment Assistance, petition TA–W–36,108 and NAFTA—03104. The denial notices were signed on August 2, 1999 and will soon be published in the **Federal Register**.

The Department has reviewed the request for reconsideration and has determined that a survey of additional customers of the subject firm would be appropriate.

**Conclusion**

After careful review of the application, I conclude that the claim is of sufficient weight to justify reconsideration of the Department of Labor's prior decision. The application is, therefore, granted.

Signed at Washington, DC, this 17th day of August 1999.

**Grant D. Beale,**

*Program Manager, Office of Trade Adjustment Assistance.*

[FR Doc. 99–22584 Filed 8–30–99; 8:45 am]

BILLING CODE 4510–30–M

## DEPARTMENT OF LABOR

### Employment and Training Administration

**[TA–W–35,769]**

### Arrow Automotive Industries, Morrilton, Arkansas; Notice of Affirmative Determination Regarding Application for Reconsideration

By letters of May 13 and July 15, 1999, the company requested administrative reconsideration of the Department of Labor's Notices of Negative Determination Regarding Eligibility to Apply for Worker Adjustment Assistance, petition TA–W–35,769. The denial notices were signed on May 3, 1999 and published in the **Federal Register** on June 3, 1999 (64 FR 29888).

The Department has reviewed the request for reconsideration and has determined that a survey of additional customers of the subject firm would be appropriate.

**Conclusion**

After careful review of the application, I conclude that the claim is of sufficient weight to justify reconsideration of the Department of Labor's prior decision. The application is, therefore, granted.

Signed at Washington, DC this 17th day of August 1999.

**Grant D. Beale,**

*Program Manager, Office of Trade Adjustment Assistance.*

[FR Doc. 99–22595 Filed 8–30–99; 8:45 am]

BILLING CODE 4510–30–M

## DEPARTMENT OF LABOR

### Employment and Training Administration

**[TA–W–36,492]**

### Banko Petroleum Management, Inc. Denver, CO; Notice of Termination Investigation

Pursuant to Section 221 of the Trade Act of 1974, an investigation was initiated on June 28, 1999, in response to a worker petition which was filed by the company on behalf of one of its workers at Banko Petroleum Management, Inc., Denver, Colorado.

The petition has requested that the petition be withdrawn. Consequently further investigation in this case would serve no purpose, and the investigation has been terminated.

Signed in Washington, DC this 11th day of August, 1999.

**Grant D. Beale,**

*Program Manager, Office of Trade Adjustment Assistance.*

[FR Doc. 99–22594 Filed 8–30–99; 8:45 am]

BILLING CODE 4510–3–M

---

## DEPARTMENT OF LABOR

### Employment and Training Administration

**[TA–W–36,030]**

### Butch Spurlin Mud Consulting, Abilene, Texas; Notice of Termination of Investigation

Pursuant to Section 221 of the Trade Act of 1974, an investigation was initiated on April 12, 1999 in response to a worker petition which was filed on behalf of workers at Butch Spurlin Mud Consulting, Abilene, Texas.

The only petitioner was separated from the subject firm more than a year prior to the date of the petition (March 24, 1999). Section 223(b)(1) of the Trade Act of 1974 specifies that no certification may apply to any worker whose last separation occurred more than a year before the date of the petition. Consequently, further investigation in this case would serve no purpose, and the investigation has been terminated.

Signed at Washington, D.C. this 11th day of August 1999.

**Grant D. Beale,**

*Program Manager, Office of Trade Adjustment Assistance.*

[FR Doc. 99–22590 Filed 8–30–99; 8:45 am]

BILLING CODE 4510–30–M

---

## DEPARTMENT OF LABOR

### Employment and Training Administration

**[TA–W–35,981]**

### Corning Incorporated, Greenville, Ohio; Notice of Negative Determination Regarding Application for Reconsideration

By application dated July 16, 1999, the American Flint Glass Workers Union Local 1018 and a company official (the petitioners) requested administrative reconsideration of the Department's negative determination regarding eligibility to apply for Trade Adjustment Assistance (TAA), applicable to workers and former workers of Corning, Incorporated. The denial notice was signed on June 18, 1999 and published in the **Federal Register** on June 30, 1999 (64 FR 35183).

Pursuant to 29 CFR 90.18(c) reconsideration may be granted under the following circumstances:

(1) If it appears on the basis of facts not previously considered that the determination complained of was erroneous;

(2) if it appears that the determination complained of was based on a mistake in the determination of facts not previously considered; or

(3) if in the opinion of the Certifying Officer, a misinterpretation of facts or of the law justified reconsideration of the decision.

The petitioners basis for the request for reconsideration is that the Department incorrectly stated that the lost business was being transferred to another domestic facility and that the Department's investigation focused on Greenville's lighting business.

The TAA petition, filed on behalf of workers of Corning Incorporated, Greenville, Ohio, producing auto glass components and Pyrex bakeware was denied in part because the ''contributed importantly'' group eligibility requirement of Section 222(3) of the Trade Act of 1974, as amended, was not met. The ''contributed importantly'' test is generally demonstrated through a survey of the workers' firm's customers. The investigation revealed that none of the subject firm customers reported increased import purchases of auto glass or bakeware. Furthermore, criterion (2) of Section 222 of the group eligibility requirements was not met for workers producing auto glass components; sales and production did not decline in the relevant time period. The Department also reported that worker separations were attributable to a transfer of production to another company-owned domestic facility.

The Department stands corrected that Corning sold the bakeware business to another company that will continue to produce the product domestically.

#### Conclusion

After review of the application and investigative findings, I conclude that there has been no error or misinterpretation of the law or of the facts which would justify reconsideration of the Department of Labor's prior decision. Accordingly, the application is denied.

Signed at Washington, DC, this 10th day of August 1999.

**Grant D. Beale,**

*Program Manager, Office of Trade Adjustment Assistance.*

[FR Doc. 99–22597 Filed 8–30–99; 8:45 am]

BILLING CODE 4510–30–M

---

## DEPARTMENT OF LABOR

### Employment and Training Administration

### Fina Oil and Chemical Company, Exploration and Production Division;

**[TA–W–36,252, MIDLAND, TEXAS, TA–W–36,252A, HOUSTON, TEXAS, (TA–W–36,252B POST, TEXAS; Amended Certification Regarding Eligibility To Apply for Worker Adjustment Assistance**

In accordance with Section 223 of the Trade Act of 1974 (19 USC 2273) the Department of Labor issued a Certification of Eligibility to Apply for Worker Adjustment Assistance on July 13, 1999, applicable to all workers of Fina Oil and Chemical Company located in Midland and Houston, Texas. The notice will soon be published in the Federal Register.

At the request of the Company, the Department reviewed the certification for workers of the subject firm. The workers are engaged in employment related to the production of crude oil and natural gas. New findings show that the Department's certification inadvertently omitted workers of Fina Oil and Chemical Company at the Post, Texas location. Other findings show that the subject firm has various divisions.

The intent of the certification is provide coverage to those workers of the subject firm engaged in crude oil and natural gas production. Therefore, the Department is amending the certification to limit coverage to those workers in the Exploration and Production Division of Fina Oil and Chemical Company and include the workers at the Post, Texas location.

The amended notice applicable to TA–W–36,252 is hereby issued as follows:

''All workers of Fina Oil and Chemical Company, Exploration and Production Division, Midland, Texas (TA–W–36,252), Houston, Texas (TA–W–36,252A), and Post, Texas (TA–W–36,252B), who became totally or partially separated from employment on or after April 23, 1998 through July 13, 2001, are eligible to apply for adjustment assistance under Section 223 of the Trade Act of 1974.''

Signed in Washington, D.C. this 10th day of August 1999

**Grant D. Beale,**

*Program Manager, Office of Trade Adjustment Assistance.*

[FR Doc. 99–22586 Filed 8–30–99; 8:45 am]

BILLING CODE 4510–30–M

## DEPARTMENT OF LABOR

### Employment and Training Administration

**[TA–W–35,895; TA–W–35,895A]**

### Guilford of Maine; Newport, ME and Guilford, ME; Amended Certification Regarding Eligibility To Apply for Worker Adjustment Assistance

In accordance with Section 223 of the Trade Act of 1974 (19 U.S.C. 2273) the Department of Labor issued a Certificaione of Eligibility to Apply for Worker Adjustment Assistance on May 13, 1999, applicable to workers of Guilford of Maine, Newport, Maine. The notice was published in the **Federal Register** on June 3, 1999 (64 FR 29889).

At the request of the State agency, the Department reviewed the certification for workers of the subject firm. New information provided by the State shows that worker separations occurred at Guilford of Maine's Guilford, Maine facility in July and August 1999. The workers are engaged in employment related to the production of polyester and polyester/wool fabric for office furniture. Accordingly, the Department is amending certification to cover workers of Guilford of Maine, Guilford, Maine.

The intent of the Department's certification is to include all workers of Guilford of Maine adversely affected by increased imports.

The amended notice applicable to TA–W–35,895 is hereby issued as follows:

All workers of Guilford of Maine, Newport, Maine (TA–W–35,895) and Guilford, Maine (TA–W–35,895A) who became totally or partially separated from employment on or after April 18, 1999 through May 13, 2001 are eligible to apply for adjustment assistance under Section 223 of the Trade Act of 1974.

Signed at Washington, DC this 13th day of August, 1999.

**Grant D. Beale,**

*Program Manager, Office of Trade Adjustment Assistance.*

[FR Doc. 99–22599 Filed 8–30–99; 8:45 am]

BILLING CODE 4510–30–M

## DEPARTMENT OF LABOR

### Employment and Training Administration

**[TA–W–36, 235]**

### Horner Flooring Company, Incorporated; Dollar Bay, Michigan; Notice of Termination of Investigation

Pursuant to Section 221 of the Trade Act of 1974, an investigation was initiated on May 17, 1999 in response to a petition which was filed by Horner Flooring Company, Incorporated on behalf of its workers at Dollar Bay, Michigan.

Since layoffs have not yet occurred and not expected to occur until later this year, the petitioner has requested that the petition be withdrawn. Consequently, further investigation in this case would serve no purpose, and the investigation has been terminated.

Signed at Washington, DC this 5th day of August 1999.

**Grant D. Beale,**

*Program Manager, Office of Trade Adjustment Assistance.*

[FR Doc. 99–22582 Filed 8–30–99; 8:45 am]

BILLING CODE 4510–30–M

## DEPARTMENT OF LABOR

### Employment and Training Administration

**[TA–W–35,614, Jacksonville, NC; TA–W–35,614A, Whiteville, NC]**

### Jasper Textiles, Inc. a/k/a Outer Banks; Amended Certification Regarding Eligibility To Apply for Worker Adjustment Assistance

In accordance with Section 223 of the Trade Act of 1974 (19 USC 2273) the Department of Labor issued a Certification of Eligibility to Apply for Worker Adjustment Assistance on March 31, 1999, applicable to workers of Jasper Textiles, Inc., a/k/a Outer Banks, Jacksonville, North Carolina. The notice was published in the Federal Register on May 21, 1999 (64 FR 27811).

At the request of the company, the Department reviewed the certification for workers of the subject firm. New findings show that worker separations will occur at the Whiteville, North Carolina facility of Jasper Textiles, Inc., a/k/a Outer banks when it closes in October, 1999. The workers are engaged in the production of men's and women's knit shirts.

Accordingly, the Department is amending the certification to cover workers at Jasper Textiles, Inc., a/k/a/ Outer Banks, Whiteville, North Carolina. The intent of the Department's certification is to include all workers of Jasper Textiles, Inc., a/k/a/ Outer Banks adversely affected by increased imports.

The amended notice applicable to TA–W–35,614 is hereby issued as follows:

All workers of Jasper Textiles, Inc., a/k/a Outer Banks, Jacksonville, North Carolina (TA–W–35,614) and Whiteville, North Carolina (TA–W–35,614A) who became totally or partially separated from employment on or after January 20, 1998 through March 31, 2001 are eligible to apply for adjustment assistance under Section 223 of the Trade Act of 1974.

Signed at Washington D.C. this 17th day of August, 1999.

**Grant D. Beale,**

*Program Manager, Office of Trade Adjustment Assistance.*

[FR Doc. 99–22600 Filed 8–30–99; 8:45 am]

BILLING CODE 4510–30–M

## DEPARTMENT OF LABOR

### Employment and Training Administration

[TA–W–35,958]

### Jencraft Corporation, McAllen, TX; Dismissal of Application for Reconsideration

Pursuant to 29 CFR 90.18(C) an application for administrative reconsideration was filed with the Director of the Office of Trade Adjustment Assistance for workers at the Jencraft Corporation, McAllen, Texas. The application contained no new substantial information which would bear importantly on the Department's determination. Therefore, dismissal of the application was issued.

TA–W–35,958; Jencraft Corporation, McAllen, Texas (August 4, 1999)

Signed at Washington, D.C., this 6th day of August, 1999.

**Grant D. Beale,**

*Program Manager, Office of Trade Adjustment Assistance.*

[FR Doc. 99–22588 Filed 8–30–99; 8:45 am]

BILLING CODE 4510–30–M

## DEPARTMENT OF LABOR

### Employment and Training Administration

**[TA–W–33,955]**

### Koh–I–Noor Inc. a/k/a Sanford Limited; Bloomsbury, NJ; Amended Certification Regarding Eligibility To Apply for Worker Adjustment Assistance

In accordance with Section 223 of the Trade Act of 1974 (19 U.S.C. 2273) the Department of Labor issued a Certification of Eligibility to Apply for Worker Adjustment Assistance on January 8, 1998, applicable to workers of Koh-I-Noor, Inc. located in Bloomsbury, New Jersey. The notice was published in the **Federal Register** on February 6, 1998 (63 FR 6209).

At the request of the State agency, the Department reviewed the determination for workers of the subjects firm. The workers of the subject firm are engaged in employment related to the production of pens. New information provided by the State indicates that on January 6, 1999, the subject firm was sold to Sanford Limited and workers at the plant continued to manufacture pens. Sanford Limited is continuing to layoff workers.

The intent of the Department's certification is to include all workers of the subject firm adversely affected by increase imports. Accordingly, the Department is amending the certification to include workers whose wages are being reported to Sanford Limited, formerly known as Koh-I-Noor.

The amended notice applicable to TA–W–33,955 is hereby issued as follows:

All workers of Koh-I-Noor, Inc., also known as Sanford Limited, Bloomsbury, New Jersey, engaged in employment related to the production of pens, who became totally or partially separated from employment on or after August 31, 1997 through January 8, 2000, are eligible to apply for adjustment assistance under Section 223 of the Trade Act of 1974.

Signed at Washington, D.C. this 19th day of August 1999.

**Grant D. Beale,**

*Program Manager, Office of Trade Adjustment Assistance.*

[FR Doc. 99–22587 Filed 8–30–99; 8:45 am]

BILLING CODE 4510–30–M

## DEPARTMENT OF LABOR

### Employment and Training Administration

**[TA–W–36,389]**

### Safe Car, Inc., San Angelo, TX; Dismissal of Application for Reconsideration

Pursuant to 29 CFR 90.18(C) an application for administrative reconsideration was filed with the Director of the Office of Trade Adjustment Assistance for workers at the Safe Car, Inc., San Angelo, Texas. The application contained no new substantial information which would bear importantly on the Department's determination. Therefore, dismissal of the application was issued.

TA–W–35,389; Safe Car, Inc., San Angelo, Texas (August 19, 1999)

Signed at Washington, DC, this 20th day of August, 1999.

**Grant D. Beale,**

*Program Manager, Office of Trade Adjustment Assistance.*

[FR Doc. 99–22598 Filed 8–30–99; 8:45 am]

BILLING CODE 4510–30–M

## DEPARTMENT OF LABOR

### Employment and Training Administration

**[TA–W–35,874]**

### Southwestern Energy Production Co., Oklahoma City, Oklahoma; Dismissal of Application for Reconsideration

Pursuant to 29 CFR 90.18(C) an application for administrative reconsideration was filed with the Director of the Office of Trade Adjustment Assistance for workers at the Southwestern Energy Production Co., Oklahoma City, Oklahoma. The application contained no new substantial information which would bear importantly on the Department's determination. Therefore, dismissal of the application was issued.

TA–W–35,874; Southwestern Energy Production Co., Oklahoma City, Oklahoma (August 12, 1999)

Signed at Washington, DC this 12th day of August, 1999.

**Grant D. Beale,**

*Program Manager, Office of Trade Adjustment Assistance.*

[FR Doc. 99–22589 Filed 8–30–99; 8:45 am]

BILLING CODE 4510–30–M

## DEPARTMENT OF LABOR

### Employment and Training Administration

### TA–W–36,650; Tektronix, Incorporated, Wilsonville, Oregon; Notice of Termination of Investigation

Pursuant to section 221 of the Trade Act of 1974, an investigation was initiated on August 9, 1999 in response to a worker petition which was filed on behalf of all workers at Tektronix, Incorporated, located in Wilsonville, Oregon (TA–W–36,650).

The petitioner has requested that the petition be withdrawn. Consequently, further investigation in this case would serve no purpose, and the investigation has been terminated.

Signed at Washington, DC, this 13th day of August 1999.

**Grant D. Beale,**

*Program Manager, Office of Trade Adjustment Assistance.*

[FR Doc. 99–22580 Filed 8–30–99; 8:45 am]

BILLING CODE 4510–30–M

## DEPARTMENT OF LABOR

### Employment and Training Administration

**[TA–W–36,477]**

### Thomson Precision Ball Company, LLC, Unionville, Connecticut; Notice of Termination of Investigation

Pursuant to Section 221 of the Trade Act of 1974, and investigation was initiated on June 28, 1999, in response to a petition filed by a company official on behalf of workers at Thomson Precision Ball Company, LLC, Unionville, Connecticut.

The petitioner has requested that the petition be withdrawn. Consequently, further investigation in this case would serve no purpose, and the investigation has been terminated.

Signed in Washington, DC this 4th day of August, 1999

**Grant D. Beale,**

*Program Manager, Office of Trade Adjustment Assistance.*

[FR Doc. 99–22583 Filed 8–30–99; 8:45 am]

BILLING CODE 4510–30–M

## DEPARTMENT OF LABOR

### Employment and Training Administration

**[TA–W–36,202 Eveleth, MN and TA–W–36,202A Forbes, MN]**

### Thunderbird Mining; Notice of Affirmative Determination Regarding Application for Reconsideration

By letter of June 25, 1999, the United Steelworkers of America, Local Union 6860, requested administrative reconsideration of the Department of Labor's Negative Determination Regarding Eligibility to Apply for Worker Adjustment Assistance applicable to workers of the subject firm. On July 26, 1999, the Department dismissed the application because no evidence was presented that the Department erred in its findings. The notice will soon be published in the **Federal Register**.

New information has been provided to the Department regarding possible customer import purchases of articles considered to be like or directly competitive with the taconite pellets produced by workers at the subject firm.

**Conclusion**

After careful review of the new information, I conclude that the claim is of sufficient weight to justify reopening the petition investigation and reconsider the Department of Labor's prior decision. The application is, therefore, granted.

Signed at Washington, DC this 11th day of August 1999.

**Grant D. Beale,**

*Program Manager, Office of Trade Adjustment Assistance.*

[FR Doc. 99–22601 Filed 8–27–99; 8:45 am]

BILLING CODE 4510–30–M

---

## DEPARTMENT OF LABOR

### Employment and Training Administration

**[TA–W–35,864 and TA–W–35,864A]**

### The Timken Company, Canton, Ohio; Notice of Affirmative Determination Regarding Application for Reconsideration

By letter of July 30, 1999, the petitioners requested administrative reconsideration of the Department of Labor's Notices of Negative Determination Regarding Eligibility to Apply for Worker Adjustment Assistance, petition TA–W–35,864 and TA–W–35,864A. The denial notices were signed on June 7, 1999 and published in the **Federal Register** on June 30, 1999 (64 FR 35183).

The Department has reviewed the request for reconsideration and has determined that a survey of additional customers of the subject firm would be appropriate.

**Conclusion**

After careful review of the application, I conclude that the claim is of sufficient weight to justify reconsideration of the Department of Labor's prior decision. The application is, therefore, granted.

Signed at Washington, DC, this 17th day of August, 1999.

**Grant D. Beale,**

*Program Manager, Office of Trade Adjustment Assistance.*

[FR Doc. 99–22596 Filed 8–30–99; 8:45 am]

BILLING CODE 4510–30–M

---

## DEPARTMENT OF LABOR

### Employment and Training Administration

**[TA–W–36,376]**

### Trim Master, Inc.; Rancho Cucamonga, California; Notice of Termination of Investigation

Pursuant to Section 221 of the Trade Act of 1974, an investigation was initiated on June 14, 1999, in response to a petition filed by a company official on behalf of workers at Trim Master, Inc., Rancho Cucamonga, California.

The petitioner has requested that the petition be withdrawn. Consequently, further investigation in this case would serve no purpose, and the investigation has been terminated.

Signed in Washington, DC, this 6th day of August, 1999.

**Grant D. Beale,**

*Program Manager, Office of Trade Adjustment Assistance.*

[FR Doc. 99–22581 Filed 8–30–99; 8:45 am]

BILLING CODE 4510–30–M

---

## DEPARTMENT OF LABOR

### Employment and Training Administration

**[TA–W–36,560]**

### Viskase Corporation, Chicago, IL; Notice of Termination of Investigation

Pursuant to Section 221 of the Trade Act of 1974, an investigation was initiated on July 19, 1999 in response to a worker petition which was filed June 12, 1999 on behalf of workers at Viskase Corporation, Chicago, Illinois.

The petitioning group of workers are covered under a recent negative Trade Adjustment Assistance determination (TA–W–35,071). No new information was included in this most recent petition. Consequently, further investigation in this case would service no purpose, and the investigation has been terminated.

Signed at Washington, DC, this 2nd day of August 1999.

**Grant D. Beale,**

*Program Manager, Office of Trade Adjustment Assistance.*

[FR Doc. 99–22593 Filed 8–30–99; 8:45 am]

BILLING CODE 4510–30–M

---

## DEPARTMENT OF LABOR

### Employment and Training Administration

### Investigations Regarding Certifications of Eligibility To Apply for Worker Adjustment Assistance

Petitions have been filed with the Secretary of Labor under Section 221(a) of the Trade Act of 1974 (''the Act'') and are identified in the Appendix to this notice. Upon receipt of these petitions, the Director of the Office of Trade Adjustment Assistance, Employment and Training Administration, has instituted investigations pursuant to Section 221(a) of the Act.

The purpose of each of the investigations is to determine whether the workers are eligible to apply for adjustment assistance under Title II, Chapter 2, of the Act. The investigations will further relate, as appropriate, to the determination of the data on which total or partial separations began or threatened to begin and the subdivision of the firm involved.

The petitioners or any other persons showing a substantial interest in the subject matter of the investigations may request a public hearing, provided such request is filed in writing with the Director, Office of Trade Adjustment Assistance, at the address shown below, not later than August 10, 1999.

Interested persons are invited to submit written comments regarding the subject matter of the investigations to the Director, Office of Trade Adjustment Assistance, at the address shown below, not later than August 10, 1999.

The petitions filed in this case are available for inspection at the Office of the Director, Office of Trade Adjustment Assistance, Employment and Training Administration, U.S. Department of Labor, 200 Constitution Avenue, N.W., Washington, D.C. 20210.

Signed at Washington, D.C. this 2nd day of August, 1999.

**Grant D. Beale,**

*Program Manager, Office of Trade Adjustment Assistance.*

## APPENDIX

PETITIONS INSTITUTED ON 08/02/1999

| Subject firm (petitioners) | TA–W | Location | Date of petition | Product(s) |
|---|---|---|---|---|
| Weldon Machine Tool (Wkrs) | 36,610 | York, PA | 07/09/1999 | Original Auto Equipment. |
| Parker Aerospace (UAW) | 36,611 | Kalamazoo, MI | 07/19/1999 | Flight Controls Systems. |
| Buffalo Color Corp (Co.) | 36,612 | Buffalo, NY | 07/20/1999 | Ingigo Liquid Paste and Powder. |
| Lincoln Industrial (IAMAW) | 36,613 | St. Louis, MO | 07/20/1999 | Grease Fittings, Spindle Screw Machines. |
| IBM Corp. (Wkrs) | 36,614 | San Jose, CA | 07/19/1999 | Hard Disk Drives. |
| Lynn Fashion (UNITE) | 36,615 | Hoboken, NJ | 07/20/1999 | Ladies' Coats. |
| Investext Group (The) (Wkrs) | 36,616 | Boston, MA | 07/20/1999 | Financial Service Industry. |
| Lee Textiles Corp (Wrks) | 36,617 | Ewing, VA | 07/15/1999 | Tee Shirt (Knit). |
| Jewelry Fashions, Inc (Wkrs) | 36,618 | New York, NY | 07/19/1999 | Costume Jewelry. |
| Hillin Simon Prime Explor (Co.) | 36,619 | Midland, TX | 07/01/1999 | Oil and Gas. |
| Corcom (Co.) | 36,620 | El Paso, TX | 07/14/1999 | Radio Frequency Filters. |
| Dart Energy Corp (Co.) | 36,621 | Mason, MI | 07/20/1999 | Drill Oil and Gas. |
| Dawson Geophysical Co. (Co.) | 36,622 | Midland, TX | 07/19/1999 | Seismic Data. |
| Interplast Universal (Wkrs) | 36,623 | Lodi, NJ | 07/19/1999 | Vinly—Car Seats. |
| AMI–DDC (IBEW) | 36,624 | Cedar Knolls, NJ | 07/20/1999 | Rivets. |
| Phelps Dodge Refining (Co.) | 36,625 | El Paso, TX | 07/22/1999 | Copper Refining. |
| Black Diamond Sportswear (Co.) | 36,626 | Barre, VT | 07/19/1999 | Men, Ladies and Children's Sportswear. |
| American National Can (Wkrs) | 36,627 | Longview, TX | 07/15/1999 | Aluminum Cans. |
| Paramount Headwear (Wkrs) | 36,628 | Bourbon, MO | 06/25/1999 | Caps, Hats and Strawhats. |
| ASARCO, Inc (Co.) | 36,629 | Sahuarita, AZ | 07/14/1999 | Copper Concentrate. |
| Tower Automotive (Wkrs) | 36,630 | Rockford, IL | 07/23/1999 | Frames for GM Trucks and SUV's. |
| Rexam Release (Wkrs) | 36,631 | Beford Park, IL | 07/17/1999 | Release Liners. |
| Dailey International (Wkrs) | 36,632 | Conroe, TX | 07/23/1999 | Oilfield Drilling Jars. |
| Levi Strauss and Co (Comp) | 36,633A | Harlingen, TX | 07/26/1999 | Denim and Docker Apparel. |
| Levi Strauss and Co (Comp) | 36,633B | El Paso, TX | 07/26/1999 | Denim and Docker Apparel. |
| Levi Strauss and Co (Comp) | 36,633C | McAllen, TX | 07/26/1999 | Denim and Docker Apparel. |
| Levi Strauss and Co (Comp) | 36,633D | Johnson City, TN | 07/26/1999 | Denim and Docker Apparel. |
| Levi Strauss and Co (Comp) | 36,633E | Mountain C. Plt. N | 07/26/1999 | Denim and Docker Apparel. |
| Levi Strauss and Co (Comp) | 36,633F | Warsaw, VA | 07/26/1999 | Denim and Docker Apparel. |
| Levi Strauss and Co (Comp) | 36,633G | Valdosta, GA | 07/26/1999 | Denim and Docker Apparel. |
| Levi Strauss and Co (Comp) | 36,633H | El Paso, TX | 07/26/1999 | Denim and Docker Apparel. |
| Levi Strauss and Co (Comp) | 36,633I | Brownsville, TX | 07/26/1999 | Denim and Docker Apparel. |
| Levi Strauss and Co (Comp) | 36,633J | San Benito, TX | 07/26/1999 | Denim and Docker Apparel. |
| Levi Strauss and Co (Comp) | 36,633K | San Antonio, TX | 07/26/1999 | Denim and Docker Apparel. |
| Levi Strauss and Co (Comp) | 36,633L | San Antonio, TX | 07/26/1999 | Denim and Docker Apparel. |
| Levi Strauss and Co (Comp) | 36,633M | Powell, TN | 07/26/1999 | Denim and Docker Apparel. |
| Levi Strauss and Co (Comp) | 36,633N | San Francisco, CA | 07/26/1999 | Denim and Docker Apparel. |
| Levi Strauss and Co (Comp) | 36,633O | Blue Ridge, GA | 07/26/1999 | Denim and Docker Apparel. |
| Levi Strauss and Co (Comp) | 36,633 | El Paso, TX | 07/26/1999 | Denim and Docker Apparel. |
| Hirsch Speidel, Inc (Co.) | 36,634 | Providence, RI | 07/22/1999 | Watch Bands and ID Bracelets. |
| AMP, Inc., Pike Plant (Wkrs) | 36,635 | Carlisle, PA | 07/07/1999 | Stamp Electrical & Electronic Connectors. |
| Southwestern Cutting (Wkrs) | 36,636 | El Paso, TX | 07/21/1999 | Cloth Cutting. |
| Motorola Cellular (Wkrs) | 36,637 | Libertyville, IL | 07/19/1999 | Digital Cellular Phones. |
| Pabst Engineering (Wkrs) | 36,638 | Onalaska, WI | 07/21/1999 | Custom Tooling and Fixtures. |
| American International (Wkrs) | 36,639 | Oscoda, MI | 07/22/1999 | Aircraft Maintenance. |
| Huck Jacobson (Co.) | 36,640 | Kenilworth, NJ | 07/19/1999 | Electrical Fittings—Couplings. |
| Chatha Enterprise (Wkrs) | 36,641 | De Lisle, MS | 07/19/1999 | Wire Harnesses. |
| General Instrument Corp (Wrks) | 36,642 | Horsham, PA | 07/21/1999 | Cable TV Amplifiers. |
| Walker McDonald (Wkrs) | 36,643 | Greenville, TX | 07/21/1999 | Tri-Cone Roller Bits. |
| G.H. Bass & Co. (Co.) | 36,644 | S. Portland, ME | 07/14/1999 | Men's, Ladies' and Children's Footwear. |
| Jet Composites (Co.) | 36,645 | Bluffton, IN | 07/23/1999 | Fiberglass Insulators. |
| J and R Consulting Serv. (Co.) | 36,646 | Tioga, ND | 07/19/1999 | Oil and Gas. |
| Cluett Peabody & Co (Comp) | 36,647 | Atlanta, GA | 07/27/1999 | Men's Dress Shirts. |

[FR Doc. 99–22585 Filed 8–30–99; 8:45 am]
BILLING CODE 4510–30–M

## DEPARTMENT OF LABOR

### Employment and Training Administration

**[NAFTA—01994]**

### Champion Aviation Products, Weatherly, PA; Notice of Negative Determination on Remand

On June 4, 1999, the United States Court of International Trade remanded this matter to the Secretary of Labor for further investigation in *Former Employees of Champion Aviation Products* v. *Secretary of Labor,* No. 98–02–00299 (Ct. Int'l Trade 1999).

The Department's initial negative determination of eligibility to apply for NAFTA Transitional Adjustment Assistance (''NAFTA–TAA'') for the workers and former workers of Champion Aviation Products, Weatherly, Pennsylvania was issued on December 11, 1997 and published in the **Federal Register** on January 6, 1998, *see* 63 FR 577 (1998). The denial was based on the finding that criteria (3) and (4) of the group eligibility requirements of Section 222 of the Trade Act of 1974, as amended, 19 U.S.C. 2231(a)(1)(A)(iii) and (B), were not met: i.e., there were no increases in imports from Mexico or Canada of articles like or directly competitive with articles produced by the workers' firm or appropriate subdivision that contributed importantly to the workers' separations; and there was no shift in production of such articles from the workers' firm or subdivision to Mexico or Canada. *See* Administrative Record (''AR'') 58–60.

The petitioners' request for reconsideration resulted in a negative determination, which was issued on January 27, 1998 and published in the **Federal Register** on February 6, 1998, *see* 63 FR 6208 (1998). The Department's determination reaffirmed its finding that imports did not contribute importantly to the workers' separations and that the workers' firm did not shift production of aircraft displays or power supplies to Mexico or Canada. AR 63–66.

On remand, the court ordered the Department to make additional findings (1) determining the appropriate subdivision in light of the intent of NAFTA–TAA and accounting for the possibility that a two-step shift in production may have occurred; (2) providing a more detailed explanation of whether the articles produced at the Pennsylvania facility are like or directly competitive with the articles produced in Mexico; and (3) describing the types and amount of equipment that moved to Mexico from Pennsylvania. *Champion Aviation,* No. 98–02–00299, slip op. at 10. In addition, the court suggested that the Department develop a methodology that does not rely on product lines alone to determine what constitutes the appropriate subdivision in a ''shift in production'' case. *Id.* at 7.

The court further suggested that the Department.

1. Describe the parent company's (Cooper Industries) organizational structure and the Weatherly's plant's position within it; *id.* at 8;

2. Interview other sources besides the former Weatherly plant manager, *id.* at 9; and

3. Provide evidence that it did not base its denial of the plaintiffs' two-step shift-in-production argument on the sole ground that the workers at the Sparta, Tennessee facility did not apply for adjustment assistance, *ibid.*

The Department contacted the successor parent firm of Champion Aviation—Federal Mogul Corporation—to obtain the additional information required by the Court.

#### New Methodology

At the outset, the Department respectfully disagrees with the court that a new methodology for determining the appropriate subdivision in a shift-in-production case is either apposite or warranted by the statute or its legislative history. It is well settled under the Trade Adjustment Assistance provision for group eligibility of the Trade Act, 19 U.S.C. 2271(a), that the ''determination of what constitutes an appropriate subdivision must be made along product lines.'' *See Kelley* v. *Secretary, United States Dep't of Labor,* 626 F Supp. 398, 402 (Ct. Int'l Trade 1985). The Department's use of the same methodology for determining what an appropriate subdivision is under the NAFTA–TAA increased-import criterion for group eligibility, 19 U.S.C. 2332(a)(1)(A), is not in dispute. The court's broader interpretation of the same ''firm or appropriate subdivision'' language in the NAFTA–TAA ''shift in production'' criterion for group eligibility, 19 U.S.C.(a)(1)(B), seems to rest on its inference that because Congress intended to expand coverage of workers in NAFTA–TAA by adding that criterion, it must also have intended to use these terms more expansively in that criterion. We think that Congress achieved the intended expansion by adding the ''shift in production'' criterion, which accounts for over half of the certifications under NAFTA–TAA, and that the Congressional desire to expand the program does not evince an intent to use terms with a well-established judicial meaning in a radically different manner.[1]

#### Appropriate Subdivision and Like or Directly Competitive Articles

The petition was filed on behalf of workers and former workers who produced aircraft power supplies (power converters) and cockpit displays in the Weatherly, Pennsylvania plant, part of Cooper Automotive's Ignition/Aviation Products Division, *see* Supplemental Administrative Record (''SAR'') 28, 32. Weatherly was the only Cooper facility that made these products before its closure, *see* SAR 36, and it produced only these articles during the period covered by the investigation. The articles were produced from 1994 until the plant closed. The plant had previously manufactured automotive headlamps, but production of these articles was stopped before 1994 and moved to Cooper's Hampton, Virginia facility. *See* SAR 17. Workers who lost their jobs as a result of this transfer of automotive headlamps cannot be certified on the present petition because the transfer was domestic and because any such workers lost their jobs more than a year before the NAFT–TAA petition was filed.[2]

By contrast, the Sparta, Tennessee facility is a part of Cooper's Automotive Lighting Products Division. *See* SAR 29. The Sparta plant produces automotive incandescent miniature lamps, halogen capsules and molds, and assembles some automotive interior lighting fixtures. SAR 18. There were no common or similar products or production processes at the Weatherly and Sparta plants from 1994 through the closure of the Weatherly plant. *See* SAR 4, 18. The aviation display products produced at Weatherly cannot

[1] In this regard is revealing that the court's quotation of the NAFTA–TAA legislative history, *Champion Aviation,* No. 98–02–00299, slip op. at 6 (''[T]he new program is designed to remedy what has been identified as one of the current shortcomings of the current TAA program'') omits the explanatory preceding clause ''By expanding eligibility to include those who lose their jobs as a result of shifts in production to Mexico or Canada, not only as a result of increased imports,'', Senate Proceedings and Debates of the 103rd Congress, First Session, 139 Cong. Rec. S16092–01, S16107 (Nov. 18, 1993). Contrary to the court's interpretation, this passage demonstrates Congress's intent to expand coverage by adding a new criterion but provides no evidence of a Congressional desire to redefine established terms within that new criterion in a way that would further expand coverage.

[2] The petition was received by the Commonwealth of Pennsylvania on October 27, 1998. *See* SAR 35.

reasonably be considered like or directly competitive with the Sparta automotive headlamps that were transferred to Mexico. The two products are not substantially identical in their inherent or intrinsic characteristics, nor are they commercially interchangeable or substitutable. The aviation lamps made in Weatherly were very different in size and method of production from the automotive lighting produced in Sparta. *See* SAR 4, 18. Aviation lamps and automotive lamps are produced by very different processes. *See* SAR 21, 24. Aviation lamps are made by a very manual process. SAR 24. ''The lamp is extremely small and the assembly requires the use of a microscope. The automotive lamps are made of highly automated production lines and are of a much larger size.'' *Ibid.*

In view of the fact that the Weatherly plant, the plaintiffs' plant, was the only Cooper facility that produced aviation products during the period covered by the investigation and that Weatherly produced only those products during that period, I find that Weatherly was the appropriate subdivision for determining wheather a shift in production occurred. I have considered whether the automotive articles produced at Sparta were sufficiently similar to Weatherly's aviation products to warrant finding Sparta an appropriate subdivision. I conclude, however, that the products' differences in inherent or intrinsic characteristics, production process and commercial use preclude such a finding. I also note that the facts that the two plants that made these products belonged to different divisions of Cooper and that neither plant made components or finished products for the other provide additional support for my conclusion.

**Two-Step Shift in Production**

According to a vice president of Cooper, there was no relationship between the transfer of automotive products from Sparta to Matamoros, Mexico and the transfer of aviation lamp production from Weatherly to Sparta. *See* SAR 4, 18. The same official stated that the move of aviation lighting from Weatherly to Sparta could have happened even if Cooper had not moved any operations to Mexico; in his opinion, the two transfers were totally unrelated. *See* SAR 24. He also observed that the Weatherly production that was moved to Sparta was a very small lamp assembly operation, especially in comparison to the automotive lamp production in Sparta. *See ibid.*

Both in our initial investigation and in our remand investigation, the former Weatherly plant manager (who co-signed the plaintiffs' petition for administrative reconsideration, *see* AR 62) asserted that the plaintiffs lost their jobs because of the shift in production of automotive lamps from Sparta to Mexico. *See* AR Business Confidential Information (''BCI'') 5, 36; SAR 23. As noted above, however, a Cooper vice president flatly rejected this contention. When informed of the conflict the former plant manager's and the higher company official's views on this matter, Cooper told us that the plant manager had no responsibility for Sparta and that the vice president was more knowledgeable about Sparta's operations. *See* SAR 24.

I also note that, during the initial investigation, the former Weatherly plant manager gave us an inconsistent explanation of why his plant closed. At that time, he attributed the closing to the plant's loss of 80% of its capacity when it shifted its automotive line to another Cooper domestic plant in 1992. *See* BCI 36 (''The Weatherly plant is being closed because you can't support this size plant with what's left''). As noted earlier, a 1992 domestic transfer of production is not a ground for certifying workers who lost their jobs in late 1997 or early 1998 under the NAFTA–TAA shift-in-production criterion.

I conclude that the record does not support the theory that the plaintiffs lost their jobs because of a two-step shift in production form Weatherly to Mexico. The unrelated nature of the domestic shift of aviation lamp production from Weatherly to Sparta and the shift of automotive lamp production from Sparta to Mexico, and the great differences between these two product lines both refute the notion that a two-step shift in production occurred here. This conclusion is further supported by the finding of our original negative determination that the real cause of the plaintiff's separation was their employer's failure to procure avionics contracts that were awarded to domestic competitors. *See* AR 59.

**Equipment Moved From Pennsylvania to Mexico**

Notes taken during the initial investigation indicated that some equipment was transferred from Weatherly to Mexico. On remand, the Department queried Cooper executives and the former Weatherly plant manager about the company's equipment transfers. The former plant manager clarified his comments and stated that the only equipment Cooper moved from Weatherly to Mexico consisted of two large air compressors, which are not production equipment. *See* SAR 23. Two Cooper vice presidents stated that the company transferred no equipment from Weatherly to Mexico. Production equipment from Weatherly was either sold at auction or transferred either to Cooper's Liberty, South Carolina or Sparta, Tennessee facilities. *See* SAR 18, 24, 34.

**Conclusion**

After careful consideration of the results of the remand investigation, I affirm the original notice of negative determination of eligibility to apply for NAFTA–TAA for workers and former workers of Champion Aviation Products, Weatherly, Pennsylvania.

Signed at Washington, DC this 17th day of August 1999.

**Grant D. Beale,**

*Program Manager, Office of Trade Adjustment Assistance.*

[FR Doc. 99–22591 Filed 8–30–99; 8:45 am]

BILLING CODE 4510–30–M

---

## DEPARTMENT OF LABOR

### Employment and Training Administration

**[NAFTA–03247]**

### Procter and Gamble Paper Products Co., Greenville Plant, Greenville, NC; Amended Certification Regarding Eligibility To Apply for NAFTA-Transitional Adjustment Assistance

In accordance with Section 250(A), Subchapter D, Chapter 2, Title II, of the Trade Act of 1974 (19 U.S.C. 2273), the Department of Labor issued a Certification for NAFTA Transitional Adjustment Assistance on July 14, 1999, applicable to workers of Procter and Gamble Paper Products Co., Greenville Plant, Greenville, North Carolina engaged in the assembly of feminine hygiene products. The notice was published in the **Federal Register** on August 11, 1999 (64 FR 43725).

At the request of the company, the Department reviewed the certification for workers of the subject firm. New findings show that the Department incorrectly limited the certification to ''all workers engaged in employment related to the assembly of feminine hygiene products.''

The intent of the Department's certification is to include ''all workers'' of Procter and Gamble Paper Products Co., Greenville Plant, Greenville, North Carolina adversely affected by increased imports from Canada.

The Department is amending the certification determination to correctly identify the worker group to read ''all workers.''

The amended notice applicable to NAFTA–03247 is hereby issued as follows:

All workers of Procter and Gamble Paper Products Co., Greenville Plant, Greenville, North Carolina who became totally or partially separated from employment on or after June 9, 1998, through July 14, 2001 are eligible to apply for NAFTA–TAA under Section 250 of the Trade Act of 1974.

Signed at Washington, DC, this 18th day of August, 1999.

**Grant D. Beale,**

*Program Manager, Office of Trade Adjustment Assistance.*

[FR Doc. 99–22592 Filed 8–30–99; 8:45 am]

BILLING CODE 4510–30–M

## DEPARTMENT OF LABOR

### Employment and Training Administration

### NAFTA—03015; Quest Petroleum Corporation, Reno, Nevada; Notice of Termination of Investigation

Pursuant to section 221 of the Trade Act of 1974, an investigation was initiated on March 22, 1999 in response to a worker petition which was dated March 1, 1999, and filed on behalf of workers at Quest Petroleum Corporation, Reno, Nevada.

The Department of Labor has determined that the petition is invalid. Under the Trade Act of 1974, as amended, a NAFTA–TAA petition may be filed by a group of three or more workers in an appropriate subdivision of a firm, by a company official, by their union, or other duly authorized representative, including community-based organizations. The petition was signed by one petitioner who is not authorized to file on behalf of all workers of the company. Consequently, further investigation in this matter would serve no purpose, and the investigation has been terminated.

Signed in Washington, DC, this 11th day of August, 1999.

**Grant D. Beale,**

*Program Manager, Office of Trade Adjustment Assistance.*

[FR Doc. 99–22579 Filed 8–30–99; 8:45 am]

BILLING CODE 4510–30–M

## NATIONAL ARCHIVES AND RECORDS ADMINISTRATION

### Records Schedules for Electronic Copies Previously Covered by General Records Schedule 20; Availability and Request for Comments

**AGENCY:** National Archives and Records Administration, Office of Records Services—Washington, DC.

**ACTION:** Notice of availability of proposed records schedules; request for comments.

**SUMMARY:** The National Archives and Records Administration (NARA) publishes notice at least once monthly of certain Federal agency requests for records disposition authority (records schedules). Once approved by NARA, records schedules provide mandatory instructions on what happens to records when no longer needed for current Government business. They authorize the preservation of records of continuing value in the National Archives of the United States and the destruction, after a specified period, of records lacking administrative, legal, research, or other value. Notice is published for records schedules in which agencies propose to destroy records not previously authorized for disposal or reduce the retention period of records already authorized for disposal.

This request for comments pertains solely to schedules for electronic copies of records created using word processing and electronic mail where the recordkeeping copies are already scheduled. (Electronic copies are records created using word processing or electronic mail software that remain in storage on the computer system after the recordkeeping copies are produced.)

These records were previously approved for disposal under General Records Schedule 20, Items 13 and 14. Pursuant to NARA Bulletin 99–04, agencies must submit schedules for the electronic copies associated with program records and administrative records not covered by the General Records Schedules. NARA invites public comments on such records schedules, as required by 44 U.S.C. 3303a(a). To facilitate review of these schedules, their availability for comment is announced in **Federal Register** notices separate from those used for other records disposition schedules.

**DATES:** Requests for copies must be received in writing on or before October 15, 1999. On request, NARA will send a copy of the schedule. NARA staff usually prepare appraisal memorandums concerning a proposed schedule. These, too, may be requested. Requesters will be given 30 days to submit comments.

Some schedules submitted in accordance with NARA Bulletin 99–04 group records by program, function, or organizational element. These schedules do not include descriptions at the file series level, but, instead, provide citations to previously approved schedules or agency records disposition manuals (see Supplementary Information section of this notice). To facilitate review of such disposition requests, previously approved schedules or manuals that are cited may be requested in addition to schedules for the electronic copies. NARA will provide the first 100 pages at no cost. NARA may charge $.20 per page for additional copies. These materials also may be examined at no cost at the National Archives at College Park (8601 Adelphi Road, College Park, MD).

**ADDRESSES:** To request a copy of any records schedule identified in this notice, write to the Life Cycle Management Division (NWML), National Archives and Records Administration (NARA), 8601 Adelphi Road, College Park, MD 20740–6001. Requests also may be transmitted by FAX to 301–713–6852 or by e-mail to records.mgt@ arch2.nara.gov.

Requesters must cite the control number, which appears in parentheses after the name of the agency which submitted the schedule, and must provide a mailing address. Those who desire appraisal reports and/or copies of previously approved schedules or manuals should so indicate in their request.

**FOR FURTHER INFORMATION CONTACT:** Marie Allen, Director, Life Cycle Management Division (NWML), National Archives and Records Administration, 8601 Adelphi Road, College Park, MD 20740–6001. Telephone: (301) 713–7110. E-mail: records.mgt@arch2.nara.gov.

**SUPPLEMENTARY INFORMATION:** Each year Federal agencies create billions of records on paper, film, magnetic tape, and other media. To control this accumulation, agency records managers prepare schedules proposing retention periods for records and submit these schedules for NARA approval, using the Standard Form (SF) 115, Request for Records Disposition Authority. These schedules provide for the timely transfer into the National Archives of historically valuable records and authorize the disposal of all other records after the agency no longer needs the records to conduct its business.

Routine administrative records common to most agencies are approved for disposal in the General Records Schedules (GRS), which are disposition schedules issued by NARA that apply Government-wide.

In the past, NARA approved the disposal of electronic copies of records created using electronic mail and word processing via General Records Schedule 20, Items 13 (word processing documents) and 14 (electronic mail). However, NARA has determined that a different approach to the disposition of electronic copies is needed. In 1998, the Archivist of the United States established an interagency Electronic Records Work Group to address this issue and pursuant to its recommendations, decided that agencies must submit schedules for the electronic copies of program records and administrative records not covered by the GRS. On March 25, 1999, the Archivist issued NARA Bulletin 99–04, which tells agencies what they must do to schedule electronic copies associated with previously scheduled program records and certain administrative records that were previously scheduled under GRS 20, Items 13 and 14.

Schedules submitted in accordance with NARA Bulletin 99–04 only cover the electronic copies associated with previously scheduled series. Agencies that wish to schedule hitherto unscheduled series must submit separate SF 115s that cover both recordkeeping copies and electronic copies used to create them.

In developing SF 115s for the electronic copies of scheduled records, agencies may use either of two scheduling models. They may add an appropriate disposition for the electronic copies formerly covered by GRS 20, Items 13 and 14, to every item in their manuals or records schedules where the recordkeeping copy has been created with a word processing or electronic mail application. This approach is described as Model 1 in Bulletin 99–04. Alternatively, agencies may group records by program, function, or organizational component and propose disposition instructions for the electronic copies associated with each grouping. This approach is described as Model 2 in the Bulletin. Schedules that follow Model 2 do not describe records at the series level.

For each schedule covered by this notice the following information is provided: Name of the Federal agency and any subdivisions requesting disposition authority; the organizational unit(s) accumulating the records or a statement that the schedule has agency-wide applicability in the case of schedules that cover records that may be accumulated throughout an agency; the control number assigned to each schedule; the total number of schedule items; the number of temporary items (the record series proposed for destruction); a brief description of the temporary electronic copies; and citations to previously approved SF 115s or printed disposition manuals that scheduled the recordkeeping copies associated with the electronic copies covered by the pending schedule. If a cited manual or schedule is available from the Government Printing Office or has been posted to a publicly available Web site, this too is noted.

Further information about the disposition process is available on request.

### Schedules Pending

1. Department of Labor, Office of the Inspector General (N9–174–99–2, 2 items, 2 temporary items). Electronic copies of records created using electronic mail and word processing that relate to investigations of labor racketeering. This schedule follows Model 1 as described in the **SUPPLEMENTARY INFORMATION** section of this notice. Recordkeeping copies of these files are included in Disposition Job No. N1–174–93–1.

2. Department of Labor, Office of the Inspector General (N9–174–99–3, 1 item, 1 temporary item). Electronic copies of records created using electronic mail and word processing that relate to the Semiannual Report to Congress prepared by the Office of the Inspector General. This schedule follows Model 1 as described in the **SUPPLEMENTARY INFORMATION** section of this notice. Recordkeeping copies of these files are included in Disposition Job No. N1–174–96–2.

Dated: August 24, 1999.

**Geraldine Phillips,**

*Acting Assistant Archivist for Record Services—Washington, DC.*

[FR Doc. 99–22619 Filed 8–30–99; 8:45 am]

BILLING CODE 7515–01–P

## NATIONAL ARCHIVES AND RECORDS ADMINISTRATION

### Advisory Committee on Presidential Libraries Meeting

Notice is hereby given that the Advisory Committee on Presidential Libraries will meet on October 14, 1999, from 10:30 a.m. to 2 p.m., in room 105 of the National Archives Building, 700 Pennsylvania Avenue, NW, Washington, DC.

The agenda for the meeting will be the Presidential library programs and a discussion of several critical issues.

The meeting will be open to the public. For further information, call David F. Peterson at 301–713–6050.

Dated: August 18, 1999.

**Mary Ann Hadyka,**

*Committee Management Officer.*

[FR Doc. 99–22618 Filed 8–30–99; 8:45 am]

BILLING CODE 7515–01–P

## NATIONAL TRANSPORTATION SAFETY BOARD

### Sunshine Act Meeting

**AGENCY HOLDING THE MEETING:** National Transportation Safety Board.

**TIME AND DATE:** 9:30 a.m., Wednesday, September 8, 1999.

**PLACE:** NTSB Board Room, 5th Floor, 490 L'Enfant Plaza, SW, Washington, DC 20594.

**STATUS:** Open to the Public.

**MATTERS TO BE CONSIDERED:**

7047A—Aviation Accident Report: Crash During Landing, Federal Express, Inc., Flight 14, McDonnell Douglas MD–11, N611FE, Newark International Airport, Newark, New Jersey, July 31, 1997.

**NEWS MEDIA CONTACT:** Telephone: (202) 314–6100. Individuals requesting specific accommodation should contact Mrs. Barbara Bush at (202) 314–6220 by Friday, August 6, 1999.

**FOR MORE INFORMATION CONTACT:** Rhonda Underwood, (202) 314–6065.

Dated: August 27, 1999.

**Rhonda Underwood,**

*Federal Register Liaison Office.*

[FR Doc. 99–22761 Filed 8–27–99; 2:10 pm]

BILLING CODE 7533–01–M

## NUCLEAR REGULATORY COMMISSION

**[Docket No, 030–19405; License No.37–20553–01 (Suspended); EA 99–057]**

### In the Matter of Alfonso Deleo, Jr., Ardmore, Pennsylvania, Order Imposing Civil Monetary Penalty

**I**

Alfonso Deleo, Jr.(Mr. Deleo or licensee) is the holder of suspended Byproduct Material License No. 37–20553–01 (license) that was originally issued by the Nuclear Regulatory Commission (NRC or Commission) pursuant to 10 CFR part 30 on April 4, 1982. The license authorized: (1) Possession and use of cesium-137 and americium-241 sealed sources (gauges)

at temporary jobsites of the licensee anywhere in the United States where the Commission maintained jurisdiction for regulating the use of licensed material; and (2) storage of the licensed material at 141 Golf Hills Road, Havertown, PA. The license has an expiration date of March 31, 2004. Licensees of the Commission are required to pay annual fees. Mr. Deleo has failed to pay annual fees since 1991.

**II**

On September 20, 1993, the NRC contacted Mr. Deleo to inform him of the need to renew the license and pay annual fees, which he had not done for the preceding two years. After Mr. Deleo indicated that it was his intent to terminate the license and that he had found a licensee to take the two gauges in his possession, the NRC outlined the steps that he would have to take to terminate the license once the licensed material was properly transferred.

Subsequently, the NRC conducted an inspection at Mr. Deleo's Havertown, PA, facility on November 16, 1994, at which time he still possessed the gauges, and had not paid the annual fees. As a result of Mr. Deleo's continued non-payment of fees, the NRC issued an Order Suspending License on February 12, 1996.

During a subsequent inspection by the NRC at Mr. Deleo's Havertown, PA, facility on December 5, 1996, the NRC determined that he failed to notify the Commission in accordance with 10 CFR 30.36(d)(3) of the cessation of principal licensed activities. Specifically, Mr. Deleo had ceased activities prior to August 15, 1994, the regulation's effective date. As a result, a Notice of Violation was issued on December 16, 1996. Mr. Deleo failed to reply to the Notice within 30 days of its issuance as required by 10 CFR 2.201. The NRC contacted Mr. Deleo on February 13, 1997, concerning his failure to reply to the December 16, 1996 Notice, and he indicated that he would reply to the Notice.

Subsequently, the NRC sent Mr. Deleo another letter on February 24, 1997, describing the Decommissioning Timeliness rule (10 CFR 30.36), and indicating that the licensed material in his possession needed to be transferred to another authorized recipient by October 15, 1998. The letter further stated that failure to dispose of licensed material by that date could result in significant enforcement action, including the imposition of monetary civil penalties. Nonetheless, Mr. Deleo did not transfer the gauges. During another inspection of Mr. Deleo's Havertown, PA, facility on March 16, 1998, he was again informed that 10 CFR 30.36 required him to transfer licensed material to an authorized recipient by October 15, 1998.

The NRC attempted to contact Mr. Deleo several times between December 30, 1998 and March 10, 1999 by leaving messages on his answering machine to determine the status of the licensed material. As of April 1, 1999, Mr. Deleo had not returned the telephone calls. As a result, a joint inspection/investigation by the NRC Office of Investigations and Division of Nuclear Materials Safety was conducted on April 1, 1999, at his Havertown, PA, facility. That investigation disclosed that Mr. Deleo still retained possession of the gauges. Based on the above, including the OI investigation, the NRC concluded that Mr. Deleo was in willful violation of NRC requirements.

Since the Licensee had not conducted its activities in full compliance with NRC requirements, a written Notice of Violation and Proposed Imposition of Civil Penalty (Notice) was served upon the Licensee by letter dated June 2, 1999. The Notice states the nature of the violation, the provision of the NRC's requirements that the Licensee had violated, and the amount of the civil penalty proposed for the violation.

**III**

Although Mr. Deleo has confirmed to the NRC, during a telephone conversation on June 18, 1999, that he has received the NRC's June 2, 1999 letter transmitting the Notice of Violation and Proposed Imposition of Civil Penalty, he has failed to respond to it and is still in possession of the gauges. Therefore, the NRC staff has determined, as set forth in the Appendix to this Order, that the violation occurred as stated and that the penalty proposed for the violation designated in the Notice should be imposed.

**IV**

In view of the foregoing and pursuant to Section 234 of the Atomic Energy Act of 1954, as amended (Act), 42 U.S.C. 2282, and 10 CFR 2.205, it is hereby ordered that:

The Licensee pay a civil penalty in the amount of $5,500 within 30 days of the date of this Order, in accordance with NUREG/BR–0254. In addition, at the time of making the payment, the licensee shall submit a statement indicating when and by what method payment was made, to the Director, Office of Enforcement, U.S. Nuclear Regulatory Commission, One White Flint North, 11555 Rockville Pike, Rockville, MD 20852–2738.

**V**

The Licensee may request a hearing within 30 days of the date of this Order. Where good cause is shown, consideration will be given to extending the time to request a hearing. A request for extension of time must be made in writing to the Director, Office of Enforcement, U.S. Nuclear Regulatory Commission, Washington, DC 20555, and include a statement of good cause for the extension. A request for a hearing should be clearly marked as a ''Request for an Enforcement Hearing'' and shall be submitted to the Secretary, U.S. Nuclear Regulatory Commission, ATTN: Rulemakings and Adjudications Staff, Washington, DC 20555. Copies also shall be sent to the Director, Office of Enforcement, U.S. Nuclear Regulatory Commission, Washington, DC 20555, to the Assistant General Counsel for Hearings and Enforcement at the same address, and to the Regional Administrator, NRC Region I, 475 Allendale Road, King of Prussia, Pennsylvania, 19406.

If a hearing is requested, the Commission will issue an Order designating the time and place of the hearing. If the Licensee fails to request a hearing within 30 days of the date of this Order (or if written approval of an extension of time in which to request a hearing has not been granted), the provisions of this Order shall be effective without further proceedings. If payment has not been made by that time, the matter may be referred to the Attorney General for collection.

In the event the Licensee requests a hearing as provided above, the issues to be considered at such hearing shall be:

(a) Whether the Licensee was in violation of the Commission's requirements as set forth in the Notice referenced in Section II above, and

(b) Whether, on the basis of such violation, this Order should be sustained.

Dated this 23rd day of August 1999.

For the Nuclear Regulatory Commission.

**R.W. Borchardt,**

*Director, Office of Enforcement.*

## Appendix: Evaluation(s) and Conclusion

On June 2, 1999, a Notice of Violation and Proposed Imposition of Civil Penalty (Notice) was issued to Alfonso Deleo for a violation identified during an NRC inspection and investigation. Mr. Deleo has failed to respond to the Notice. Accordingly, the NRC has concluded that the violation occurred as stated in the Notice and the licensee has not provided any basis for a reduction of the severity level or for mitigation of

the civil penalty. Therefore, the proposed civil penalty in the amount of $5,500 should be imposed.

[FR Doc. 99–22651 Filed 8–30–99; 8:45 am]

BILLING CODE 7590–01–P

## NUCLEAR REGULATORY COMMISSION

**[Docket Nos. 50–315 and 50–316]**

## Indiana Michigan Power Company; Notice of Consideration of Issuance of Amendment to Facility Operating License, Proposed No Significant Hazards Consideration Determination, and Opportunity for a Hearing

The U.S. Nuclear Regulatory Commission (the Commission) is considering issuance of an amendment to Facility Operating License Nos. DPR–58 and DPR–74 issued to Indiana Michigan Power Company (the licensee) for operation of the Donald C. Cook Nuclear Power Plant, Units 1 and 2, located in Berrien County, Michigan.

The proposed amendments would revise Technical Specification (TS) 3.3.3.8 for Unit 1 and TS 3.3.3.6 for Unit 2, ''Post-Accident Instrumentation.'' The proposed changes to the TSs will place tighter restrictions on the amount of time the refueling water storage tank (RWST) water level instrumentation may be inoperable before the limiting conditions for operation in the TSs are applied.

Before issuance of the proposed license amendment, the Commission will have made findings required by the Atomic Energy Act of 1954, as amended (the Act) and the Commission's regulations.

The Commission has made a proposed determination that the amendment request involves no significant hazards consideration. Under the Commission's regulations in 10 CFR 50.92, this means that operation of the facility in accordance with the proposed amendment would not (1) involve a significant increase in the probability or consequences of an accident previously evaluated; or (2) create the possibility of a new or different kind of accident from any accident previously evaluated; or (3) involve a significant reduction in a margin of safety. As required by 10 CFR 50.91(a), the licensee has provided its analysis of the issue of no significant hazards consideration, which is presented below:

*Criterion 1*

This amendment request does not involve a significant increase in the probability or consequences of an accident previously evaluated because the proposed changes do not change or add to any of the accidents previously evaluated. The T/S changes do not change the available instrumentation nor change the readability of the instrumentation. The T/S changes make the allowable out of service time more conservative for the RWST water level instrumentation, reducing the allowable time from 30-days to 72-hours for a single channel out-of-service, with T/S 3.0.3 being entered if both channels of instrumentation are lost.

*Criterion 2*

The proposed change does not create the possibility of a new or different kind of accident from any previously evaluated. The T/S change only reduces the allowable out of service time for the RWST water level instrumentation. It does not involve a physical change and does not create a new type of accident.

*Criterion 3*

This proposed change does not involve a significant reduction in a margin of safety. The T/S change is limited to the allowable out of service time and does not change the number of instrument channels available, the testing of the instruments or the range of the instruments.

The NRC staff has reviewed the licensee's analysis and, based on this review, it appears that the three standards of 10 CFR 50.92(c) are satisfied. Therefore, the NRC staff proposes to determine that the amendment request involves no significant hazards consideration.

The Commission is seeking public comments on this proposed determination. Any comments received within 30 days after the date of publication of this notice will be considered in making any final determination.

Normally, the Commission will not issue the amendment until the expiration of the 30-day notice period. However, should circumstances change during the notice period such that failure to act in a timely way would result, for example, in derating or shutdown of the facility, the Commission may issue the license amendment before the expiration of the 30-day notice period, provided that its final determination is that the amendment involves no significant hazards consideration. The final determination will consider all public and State comments received. Should the Commission take this action, it will publish in the **Federal Register** a notice of issuance and provide for opportunity for a hearing after issuance. The Commission expects that the need to take this action will occur very infrequently.

Written comments may be submitted by mail to the Chief, Rules and Directives Branch, Division of Administrative Services, Office of Administration, U.S. Nuclear Regulatory Commission, Washington, DC 20555–0001, and should cite the publication date and page number of this **Federal Register** notice. Written comments may also be delivered to Room 6D59, Two White Flint North, 11545 Rockville Pike, Rockville, Maryland, from 7:30 a.m. to 4:15 p.m. Federal workdays. Copies of written comments received may be examined at the NRC Public Document Room, the Gelman Building, 2120 L Street, NW., Washington, DC.

The filing of requests for hearing and petitions for leave to intervene is discussed below.

By September 30, 1999, the licensee may file a request for a hearing with respect to issuance of the amendment to the subject facility operating license and any person whose interest may be affected by this proceeding and who wishes to participate as a party in the proceeding must file a written request for a hearing and a petition for leave to intervene. Requests for a hearing and a petition for leave to intervene shall be filed in accordance with the Commission's ''Rules of Practice for Domestic Licensing Proceedings'' in 10 CFR Part 2. Interested persons should consult a current copy of 10 CFR 2.714 which is available at the Commission's Public Document Room, the Gelman Building, 2120 L Street, NW., Washington, DC, and at the local public document room located at the Maud Preston Palenske Memorial Library, 500 Market Street, St. Joseph, MI 49085. If a request for a hearing or petition for leave to intervene is filed by the above date, the Commission or an Atomic Safety and Licensing Board, designated by the Commission or by the Chairman of the Atomic Safety and Licensing Board Panel, will rule on the request and/or petition; and the Secretary or the designated Atomic Safety and Licensing Board will issue a notice of hearing or an appropriate order.

As required by 10 CFR 2.714, a petition for leave to intervene shall set forth with particularity the interest of the petitioner in the proceeding, and how that interest may be affected by the results of the proceeding. The petition should specifically explain the reasons why intervention should be permitted with particular reference to the following factors: (1) The nature of the petitioner's right under the Act to be made party to the proceeding; (2) the nature and extent of the petitioner's property, financial, or other interest in the proceeding; and (3) the possible effect of any order which may be entered in the proceeding on the petitioner's interest. The petition should

also identify the specific aspect(s) of the subject matter of the proceeding as to which petitioner wishes to intervene. Any person who has filed a petition for leave to intervene or who has been admitted as a party may amend the petition without requesting leave of the Board up to 15 days prior to the first prehearing conference scheduled in the proceeding, but such an amended petition must satisfy the specificity requirements described above.

Not later than 15 days prior to the first prehearing conference scheduled in the proceeding, a petitioner shall file a supplement to the petition to intervene which must include a list of the contentions which are sought to be litigated in the matter. Each contention must consist of a specific statement of the issue of law or fact to be raised or controverted. In addition, the petitioner shall provide a brief explanation of the bases of the contention and a concise statement of the alleged facts or expert opinion which support the contention and on which the petitioner intends to rely in proving the contention at the hearing. The petitioner must also provide references to those specific sources and documents of which the petitioner is aware and on which the petitioner intends to rely to establish those facts or expert opinion. Petitioner must provide sufficient information to show that a genuine dispute exists with the applicant on a material issue of law or fact. Contentions shall be limited to matters within the scope of the amendment under consideration. The contention must be one which, if proven, would entitle the petitioner to relief. A petitioner who fails to file such a supplement which satisfies these requirements with respect to at least one contention will not be permitted to participate as a party.

Those permitted to intervene become parties to the proceeding, subject to any limitations in the order granting leave to intervene, and have the opportunity to participate fully in the conduct of the hearing, including the opportunity to present evidence and cross-examine witnesses.

If a hearing is requested, the Commission will make a final determination on the issue of no significant hazards consideration. The final determination will serve to decide when the hearing is held.

If the final determination is that the amendment request involves no significant hazards consideration, the Commission may issue the amendment and make it immediately effective, notwithstanding the request for a hearing. Any hearing held would take place after issuance of the amendment.

If the final determination is that the amendment request involves a significant hazards consideration, any hearing held would take place before the issuance of any amendment.

A request for a hearing or a petition for leave to intervene must be filed with the Secretary of the Commission, U.S. Nuclear Regulatory Commission, Washington, DC 20555–0001, Attention: Rulemakings and Adjudications Staff, or may be delivered to the Commission's Public Document Room, the Gelman Building, 2120 L Street, NW., Washington, DC, by the above date. A copy of the petition should also be sent to the Office of the General Counsel, U.S. Nuclear Regulatory Commission, Washington, DC 20555–0001, and to Jeremy J. Euto, Esquire, 500 Circle Drive, Buchanan, MI 49107, attorney for the licensee.

Nontimely filings of petitions for leave to intervene, amended petitions, supplemental petitions and/or requests for hearing will not be entertained absent a determination by the Commission, the presiding officer or the presiding Atomic Safety and Licensing Board that the petition and/or request should be granted based upon a balancing of the factors specified in 10 CFR 2.714(a)(1)(i)–(v) and 2.714(d).

For further details with respect to this action, see the application for amendment dated October 8, 1998, which is available for public inspection at the Commission's Public Document Room, the Gelman Building, 2120 L Street, NW., Washington, DC, and at the local public document room located at the Maud Preston Palenske Memorial Library, 500 Market Street, St. Joseph, MI 49085.

Dated at Rockville, Maryland, this 24th day of August, 1999.

For the Nuclear Regulatory Commission.

**John F. Stang,**

*Sr. Project Manager, Section 1,*

*Sr. Project Directorate III,*

*Division of Licensing Project Management,*

*Office of Nuclear Reactor Regulation.*

[FR Doc. 99–22488 Filed 8–30–99; 8:45 am]

BILLING CODE 7590–01–P

## NUCLEAR REGULATORY COMMISSION

**[Docket Nos. 50–315 AND 50–316]**

## Indiana Michigan Power Company; Notice of Consideration of Issuance of Amendment to Facility Operating License, Proposed No Significant Hazards Consideration Determination, and Opportunity for a Hearing

The U.S. Nuclear Regulatory Commission (the Commission) is considering issuance of amendments to Facility Operating License Nos. DPR–58 and DPR–74 issued to Indiana Michigan Power Company (the licensee) for operation of the Donald C. Cook Nuclear Power Plant, Units 1 and 2, located in Berrien County, Michigan.

The proposed amendments would change the runout limits for a safety injection (SI) pump to 675 gallons per minute (gpm), unless the pump is specifically tested to a higher flow rate, not exceeding 700 gpm for both Units 1 and 2. This change was initiated upon reevaluation of correspondence from Westinghouse sent to the licensee in 1991, which indicated that the generic runout limits for Pacific 2″ JTCH pumps was 675 gpm unless each specific pump is tested to a higher flow rate. Individual testing is necessary due to test variations between pumps which may limit the applicability of testing of one pump to another pump due to manufacturing tolerances in the sand cast impellers and material changes in the pump casing.

Furthermore, the bases section is being clarified to describe why the injection rather than the recirculation mode during flow balancing is the minimum resistance and, consequently, more conservative configuration for runout considerations.

Before issuance of the proposed license amendment, the Commission will have made findings required by the Atomic Energy Act of 1954, as amended (the Act) and the Commission's regulations.

The Commission has made a proposed determination that the amendment request involves no significant hazards consideration. Under the Commission's regulations in 10 CFR 50.92, this means that operation of the facility in accordance with the proposed amendment would not (1) involve a significant increase in the probability or consequences of an accident previously evaluated; or (2) create the possibility of a new or different kind of accident from any accident previously evaluated; or (3) involve a significant reduction in a margin of safety. As required by 10 CFR 50.91(a), the licensee has provided its

analysis of the issue of no significant hazards consideration, which is presented below:

In accordance with 10 CFR 50.92, this proposed amendment does not involve a significant hazard consideration if it does not:

1. Involve a significant increase in the probability or consequences of an accident previously evaluated.

The proposed reduction in the SI pump runout flow does not increase the probability of occurrence of any previously evaluated accident because the SI pumps are not considered to be accident initiators. In addition, flow balancing performed at Cook Nuclear Plant has proven the ability to deliver the minimum T/S flow of 300 gpm to each pair of cold leg injection points without exceeding the 675 gpm (or 700 gpm) pump runout limits. Therefore, the emergency core cooling system performance objectives of 10 CFR 50.46 are not impacted and this change does not involve a significant increase in the consequences of an accident previously evaluated.

2. Create the possibility of a new or different kind of accident from any accident previously evaluated.

This proposed change imposes a generic limit on maximum allowable flow for untested SI pumps. No physical system changes or changes in operating modes are being made that could introduce new or different kinds of accidents from those previously evaluated. As discussed in (1) above, the SI pumps are not considered accident initiators, and this status is not affected by the change to the SI pump runout limits.

3. Involve a significant reduction in a margin of safety.

This change reflects a reduced maximum single pump flow to be observed during flow balancing of the SI system. Flow balance testing at Cook Nuclear Plant has demonstrated the ability to meet the SI flow requirements while maintaining an adequate margin to the revised lower runout limits being proposed by this submittal. Because the minimum required SI flow delivered to the core has not been reduced by this change, the change does not involve a reduction in a margin of safety.

Based on the preceding, the evaluation concluded that the proposed change to the SI pump runout limits does not involve a significant hazards consideration as defined in 10 CFR 50.92.

The NRC staff has reviewed the licensee's analysis and, based on this review, it appears that the three standards of 10 CFR 50.92 are satisfied. Therefore, the NRC staff proposes to determine that the amendment request involves no significant hazards consideration.

The Commission is seeking public comments on this proposed determination. Any comments received within 30 days after the date of publication of this notice will be considered in making any final determination.

Normally, the Commission will not issue the amendment until the expiration of the 30-day notice period. However, should circumstances change during the notice period such that failure to act in a timely way would result, for example, in derating or shutdown of the facility, the Commission may issue the license amendment before the expiration of the 30-day notice period, provided that its final determination is that the amendment involves no significant hazards consideration. The final determination will consider all public and State comments received. Should the Commission take this action, it will publish in the **Federal Register** a notice of issuance and provide for opportunity for a hearing after issuance. The Commission expects that the need to take this action will occur very infrequently.

Written comments may be submitted by mail to the Chief, Rules and Directives Branch, Division of Administrative Services, Office of Administration, U.S. Nuclear Regulatory Commission, Washington, DC 20555–0001, and should cite the publication date and page number of this **Federal Register** notice. Written comments may also be delivered to Room 6D59, Two White Flint North, 11545 Rockville Pike, Rockville, Maryland, from 7:30 a.m. to 4:15 p.m. Federal workdays. Copies of written comments received may be examined at the NRC Public Document Room, the Gelman Building, 2120 L Street, NW., Washington, DC.

The filing of requests for hearing and petitions for leave to intervene is discussed below.

By September 30, 1999, the licensee may file a request for a hearing with respect to issuance of the amendment to the subject facility operating license and any person whose interest may be affected by this proceeding and who wishes to participate as a party in the proceeding must file a written request for a hearing and a petition for leave to intervene. Requests for a hearing and a petition for leave to intervene shall be filed in accordance with the Commission's ''Rules of Practice for Domestic Licensing Proceedings'' in 10 CFR Part 2. Interested persons should consult a current copy of 10 CFR 2.714 which is available at the Commission's Public Document Room, the Gelman Building, 2120 L Street, NW., Washington, DC, and at the local public document room located at the Maud Preston Palenske Memorial Library, 500 Market Street, St. Joseph, MI 49085. If a request for a hearing or petition for leave to intervene is filed by the above date, the Commission or an Atomic Safety and Licensing Board, designated by the Commission or by the Chairman of the Atomic Safety and Licensing Board Panel, will rule on the request and/or petition; and the Secretary or the designated Atomic Safety and Licensing Board will issue a notice of hearing or an appropriate order.

As required by 10 CFR 2.714, a petition for leave to intervene shall set forth with particularity the interest of the petitioner in the proceeding, and how that interest may be affected by the results of the proceeding. The petition should specifically explain the reasons why intervention should be permitted with particular reference to the following factors: (1) The nature of the petitioner's right under the Act to be made party to the proceeding; (2) the nature and extent of the petitioner's property, financial, or other interest in the proceeding; and (3) the possible effect of any order which may be entered in the proceeding on the petitioner's interest. The petition should also identify the specific aspect(s) of the subject matter of the proceeding as to which petitioner wishes to intervene. Any person who has filed a petition for leave to intervene or who has been admitted as a party may amend the petition without requesting leave of the Board up to 15 days prior to the first prehearing conference scheduled in the proceeding, but such an amended petition must satisfy the specificity requirements described above.

Not later than 15 days prior to the first prehearing conference scheduled in the proceeding, a petitioner shall file a supplement to the petition to intervene which must include a list of the contentions which are sought to be litigated in the matter. Each contention must consist of a specific statement of the issue of law or fact to be raised or controverted. In addition, the petitioner shall provide a brief explanation of the bases of the contention and a concise statement of the alleged facts or expert opinion which support the contention and on which the petitioner intends to rely in proving the contention at the hearing. The petitioner must also provide references to those specific sources and documents of which the petitioner is aware and on which the petitioner intends to rely to establish those facts or expert opinion. Petitioner must provide sufficient information to show that a genuine dispute exists with the applicant on a material issue of law or fact. Contentions shall be limited to matters within the scope of the amendment under consideration. The contention must be one which, if proven, would entitle the petitioner to relief. A petitioner who fails to file such

a supplement which satisfies these requirements with respect to at least one contention will not be permitted to participate as a party.

Those permitted to intervene become parties to the proceeding, subject to any limitations in the order granting leave to intervene, and have the opportunity to participate fully in the conduct of the hearing, including the opportunity to present evidence and cross-examine witnesses.

If a hearing is requested, the Commission will make a final determination on the issue of no significant hazards consideration. The final determination will serve to decide when the hearing is held.

If the final determination is that the amendment request involves no significant hazards consideration, the Commission may issue the amendment and make it immediately effective, notwithstanding the request for a hearing. Any hearing held would take place after issuance of the amendment.

If the final determination is that the amendment request involves a significant hazards consideration, any hearing held would take place before the issuance of any amendment.

A request for a hearing or a petition for leave to intervene must be filed with the Secretary of the Commission, U.S. Nuclear Regulatory Commission, Washington, DC 20555-0001, Attention: Rulemakings and Adjudications Staff, or may be delivered to the Commission's Public Document Room, the Gelman Building, 2120 L Street, NW., Washington, DC, by the above date. A copy of the petition should also be sent to the Office of the General Counsel, U.S. Nuclear Regulatory Commission, Washington, DC 20555–0001, and to Jeremy J. Euto, Esquire, 500 Circle Drive, Buchanan, MI 49107, attorney for the licensee.

Nontimely filings of petitions for leave to intervene, amended petitions, supplemental petitions and/or requests for hearing will not be entertained absent a determination by the Commission, the presiding officer or the presiding Atomic Safety and Licensing Board that the petition and/or request should be granted based upon a balancing of the factors specified in 10 CFR 2.714(a)(1)(I)-(v) and 2.714(d).

For further details with respect to this action, see the application for amendment dated May 21, 1999, which is available for public inspection at the Commission's Public Document Room, the Gelman Building, 2120 L Street, NW., Washington, DC, and at the local public document room located at the Maud Preston Palenske Memorial Library, 500 Market Street, St. Joseph, MI 49085.

Dated at Rockville, Maryland, this 25th day of August 1999.

For the Nuclear Regulatory Commission.

**John F. Stang, Sr.,**

*Project Manager, Section 1, Project Directorate III, Division of Licensing Project Management, Office of Nuclear Reactor Regulation.*

[FR Doc. 99–22489 Filed 8–30–99; 8:45 am]

BILLING CODE 7590–01–P

---

## NUCLEAR REGULATORY COMMISSION

**[Docket Nos. 50–315 and 50–316]**

## Indiana Michigan Power Company; Notice of Consideration of Issuance of Amendment to Facility Operating License, Proposed No Significant Hazards Consideration Determination, and Opportunity for a Hearing

The U.S. Nuclear Regulatory Commission (the Commission) is considering issuance of amendments to Facility Operating License Nos. DPR–58 and DPR–74 issued to Indiana Michigan Power Company (the licensee) for operation of the Donald C. Cook Nuclear Power Plant, Units 1 and 2, located in Berrien County, Michigan.

The proposed amendments would make administrative changes to several Technical Specifications to remove obsolete information, provide consistency between Unit 1 and Unit 2, provide consistency with the Standard Technical Specifications, provide clarification, and correct typographical errors.

Before issuance of the proposed license amendment, the Commission will have made findings required by the Atomic Energy Act of 1954, as amended (the Act), and the Commission's regulations.

The Commission has made a proposed determination that the amendment request involves no significant hazards consideration. Under the Commission's regulations in 10 CFR 50.92, this means that operation of the facility in accordance with the proposed amendment would not (1) involve a significant increase in the probability or consequences of an accident previously evaluated; or (2) create the possibility of a new or different kind of accident from any accident previously evaluated; or (3) involve a significant reduction in a margin of safety. As required by 10 CFR 50.91(a), the licensee has provided its analysis of the issue of no significant hazards consideration, which is presented below:

1. Does the change involve a significant increase in the probability of occurrence or consequences of an accident previously evaluated?

The proposed change for boron sampling requirements in mode 6 does not affect the probability of a fuel handling accident. The unlikely event of a fuel assembly being misloaded is independent of the sampling frequency for fuel pool boron concentration. It has no impact on the event initiator, which is a human error while positioning a fuel assembly. The change has no impact on the assumptions for a fuel handling accident. The boron concentration requirement is not changed; there is sufficient boron in the fuel storage pool to maintain $k_{eff}$ below 0.95 to preclude an inadvertent criticality. Therefore, the consequences of the accident will be mitigated as previously evaluated. The 72-hour maximum interval between samples is maintained. Operating experience has shown 72 hours to be adequate. Removing the additional limitation of sampling at least three times per week would allow the sample to be collected two or three times per week, consistent with the maximum 72-hour interval. This is acceptable because boron concentration changes occur slowly due to the large volume of water in the system and relatively small volumes of dilution sources. The consequences are not increased because there are no changes to the spent fuel, shielding (water), or systems used to mitigate the consequences of an accident. Additionally, there is no change in the types or significant increase in the amounts of any effluents released offsite.

Deleting the redundant figure for equivalent reactivity criteria for regions in the spent fuel storage racks does not impact the storage requirements because the equations provide equivalent requirements. The unlikely event of a fuel assembly being misloaded is independent of the characteristics of the spent fuel in the pool. It has no impact on the event initiator, which is a human error while positioning a fuel assembly. The change has no impact the assumptions for a fuel handling accident because the fuel storage requirements are not changed. The consequences of an accident are not increased because the fuel storage requirements are not changed and no other changes are made to systems that mitigate the consequences of an accident.

The proposed changes to correct a reference to another requirement, delete obsolete notes, revise the name of drumming room roll-up door, and correct typographical errors are considered administrative. The reference leads to a section that no longer exists; the proposed change corrects the error. The notes permitted exceptions to requirements, and they are no longer required. The normal requirements have applied since the provisions expired. Deleting them eliminates extraneous information. The revised description of the door reflects the current use of the installed door. Correcting the typographical errors improves readability. The corrections are not intended to change the meaning. These changes do not affect accidents described in the UFSAR.

Adding new surveillance requirements to test the Unit 2 pump performance pursuant

to T/S 4.0.5 does not affect accident initiators or precursors. The change reflects ASME code requirements. Including the requirements in the corresponding section provides assurance that the pumps will operate as assumed in the accident analyses. As such, the probability and consequences of previously evaluated accidents is unchanged.

The proposed change to the description of instrumentation configuration is considered administrative because the configuration had been reviewed and approved by the NRC Staff, as documented in the Safety Evaluation Report for amendment 39 for DPR–58 and amendment 22 for DPR–74. There are no changes to the actual plant configuration. The change is intended to describe the installed equipment more clearly. The change does not affect the probability and consequences of previously evaluated accidents because the equipment is installed and operated as described in the correspondence related to the previous amendments.

Based on this review, it is concluded that the proposed changes do not involve a significant increase in the probability of occurrence or consequences of an accident previously evaluated.

2. Does the change create the possibility of a new or different kind of accident from any accident previously evaluated?

The proposed changes remove obsolete information, provide consistency between Unit 1 and Unit 2, provide consistency with the Standard Technical Specifications, provide clarification, and correct typographical errors. These changes are considered administrative because they do not affect the design or operation of any system, structure, or component in the plant. The accident analysis assumptions and results are unchanged. No new failures or interactions have been created. Based on this review, it is concluded that the proposed changes do not create the possibility of a new or different kind of accident from any previously evaluated.

3. Does the change involve a significant reduction in a margin of safety?

The proposed changes are considered administrative in nature. They do not affect any safety limits or T/S parameter limits. The proposed changes do not introduce new equipment, equipment modifications, or new or different modes of plant operation. These changes do not affect the operational characteristics of any equipment or systems. Based on this review, it is concluded that no reduction in the margin of safety will occur as a result of the changes.

The NRC staff has reviewed the licensee's analysis and, based on this review, it appears that the three standards of 10 CFR 50.92 are satisfied. Therefore, the NRC staff proposes to determine that the amendment request involves no significant hazards consideration.

The Commission is seeking public comments on this proposed determination. Any comments received within 30 days after the date of publication of this notice will be considered in making any final determination.

Normally, the Commission will not issue the amendment until the expiration of the 30-day notice period. However, should circumstances change during the notice period such that failure to act in a timely way would result, for example, in derating or shutdown of the facility, the Commission may issue the license amendment before the expiration of the 30-day notice period, provided that its final determination is that the amendment involves no significant hazards consideration. The final determination will consider all public and State comments received. Should the Commission take this action, it will publish in the **Federal Register** a notice of issuance and provide for opportunity for a hearing after issuance. The Commission expects that the need to take this action will occur very infrequently.

Written comments may be submitted by mail to the Chief, Rules and Directives Branch, Division of Administrative Services, Office of Administration, U.S. Nuclear Regulatory Commission, Washington, DC 20555–0001, and should cite the publication date and page number of this **Federal Register** notice. Written comments may also be delivered to Room 6D59, Two White Flint North, 11545 Rockville Pike, Rockville, Maryland, from 7:30 a.m. to 4:15 p.m. Federal workdays. Copies of written comments received may be examined at the NRC Public Document Room, the Gelman Building, 2120 L Street, NW., Washington, DC.

The filing of requests for hearing and petitions for leave to intervene is discussed below.

By September 30, 1999, the licensee may file a request for a hearing with respect to issuance of the amendment to the subject facility operating license and any person whose interest may be affected by this proceeding and who wishes to participate as a party in the proceeding must file a written request for a hearing and a petition for leave to intervene. Requests for a hearing and a petition for leave to intervene shall be filed in accordance with the Commission's ''Rules of Practice for Domestic Licensing Proceedings'' in 10 CFR part 2. Interested persons should consult a current copy of 10 CFR 2.714 which is available at the Commission's Public Document Room, the Gelman Building, 2120 L Street, NW., Washington, DC, and at the local public document room located at the Maud Preston Palenske Memorial Library, 500 Market Street, St. Joseph, MI 49085. If a request for a hearing or petition for leave to intervene is filed by the above date, the Commission or an Atomic Safety and Licensing Board, designated by the Commission or by the Chairman of the Atomic Safety and Licensing Board Panel, will rule on the request and/or petition; and the Secretary or the designated Atomic Safety and Licensing Board will issue a notice of hearing or an appropriate order.

As required by 10 CFR 2.714, a petition for leave to intervene shall set forth with particularity the interest of the petitioner in the proceeding, and how that interest may be affected by the results of the proceeding. The petition should specifically explain the reasons why intervention should be permitted with particular reference to the following factors: (1) The nature of the petitioner's right under the Act to be made party to the proceeding; (2) the nature and extent of the petitioner's property, financial, or other interest in the proceeding; and (3) the possible effect of any order which may be entered in the proceeding on the petitioner's interest. The petition should also identify the specific aspect(s) of the subject matter of the proceeding as to which petitioner wishes to intervene. Any person who has filed a petition for leave to intervene or who has been admitted as a party may amend the petition without requesting leave of the Board up to 15 days prior to the first prehearing conference scheduled in the proceeding, but such an amended petition must satisfy the specificity requirements described above.

Not later than 15 days prior to the first prehearing conference scheduled in the proceeding, a petitioner shall file a supplement to the petition to intervene which must include a list of the contentions which are sought to be litigated in the matter. Each contention must consist of a specific statement of the issue of law or fact to be raised or controverted. In addition, the petitioner shall provide a brief explanation of the bases of the contention and a concise statement of the alleged facts or expert opinion which support the contention and on which the petitioner intends to rely in proving the contention at the hearing. The petitioner must also provide references to those specific sources and documents of which the petitioner is aware and on which the petitioner intends to rely to establish those facts or expert opinion. Petitioner must provide sufficient information to show that a genuine dispute exists with the applicant on a material issue of law or fact. Contentions shall be limited to matters within the scope of the amendment under consideration. The contention must be one which, if

proven, would entitle the petitioner to relief. A petitioner who fails to file such a supplement which satisfies these requirements with respect to at least one contention will not be permitted to participate as a party.

Those permitted to intervene become parties to the proceeding, subject to any limitations in the order granting leave to intervene, and have the opportunity to participate fully in the conduct of the hearing, including the opportunity to present evidence and cross-examine witnesses.

If a hearing is requested, the Commission will make a final determination on the issue of no significant hazards consideration. The final determination will serve to decide when the hearing is held.

If the final determination is that the amendment request involves no significant hazards consideration, the Commission may issue the amendment and make it immediately effective, notwithstanding the request for a hearing. Any hearing held would take place after issuance of the amendment.

If the final determination is that the amendment request involves a significant hazards consideration, any hearing held would take place before the issuance of any amendment.

A request for a hearing or a petition for leave to intervene must be filed with the Secretary of the Commission, U.S. Nuclear Regulatory Commission, Washington, DC 20555–0001, Attention: Rulemakings and Adjudications Staff, or may be delivered to the Commission's Public Document Room, the Gelman Building, 2120 L Street, NW., Washington, DC, by the above date. A copy of the petition should also be sent to the Office of the General Counsel, U.S. Nuclear Regulatory Commission, Washington, DC 20555–0001, and to Jeremy J. Euto, Esquire, 500 Circle Drive, Buchanan, MI 49107, attorney for the licensee.

Nontimely filings of petitions for leave to intervene, amended petitions, supplemental petitions and/or requests for hearing will not be entertained absent a determination by the Commission, the presiding officer or the presiding Atomic Safety and Licensing Board that the petition and/or request should be granted based upon a balancing of the factors specified in 10 CFR 2.714(a)(1)(I)–(v) and 2.714(d).

For further details with respect to this action, see the application for amendment dated May 21, 1999, which is available for public inspection at the Commission's Public Document Room, the Gelman Building, 2120 L Street, NW., Washington, DC, and at the local public document room located at the Maud Preston Palenske Memorial Library, 500 Market Street, St. Joseph, MI 49085.

Dated at Rockville, Maryland, this 25th day of August, 1999.

For the Nuclear Regulatory Commission.

**John F. Stang,**

*Sr. Project Manager, Section 1, Project Directorate III, Division of Licensing Project Management, Office of Nuclear Reactor Regulation.*

[FR Doc. 99–22490 Filed 8–30–99; 8:45 am]

BILLING CODE 7590–01–P

---

## NUCLEAR REGULATORY COMMISSION

**[Docket No. 50–271]**

## Vermont Yankee Nuclear Power Corporation; Notice of Consideration of Issuance of Amendment to Facility Operating License, Proposed No Significant Hazards Consideration Determination, and Opportunity for a Hearing

The U.S. Nuclear Regulatory Commission (the Commission) is considering issuance of an amendment to Facility Operating License No. DPR–28 issued to Vermont Yankee Nuclear Power Corporation (the licensee) for operation of the Vermont Yankee Nuclear Power Station (VY) located in Vernon, Vermont.

The proposed amendment would modify the operability requirements for the high pressure cooling systems—High Pressure Coolant Injection (HPCI), Reactor Core Isolation Cooling (RCIC) and Automatic Depressurization System (ADS)—and the safety and relief valves, and add a time limitation for conducting operability testing of HPCI and RCIC.

Before issuance of the proposed license amendment, the Commission will have made findings required by the Atomic Energy Act of 1954, as amended (the Act) and the Commission's regulations.

The Commission has made a proposed determination that the amendment request involves no significant hazards consideration. Under the Commission's regulations in 10 CFR 50.92, this means that operation of the facility in accordance with the proposed amendment would not (1) involve a significant increase in the probability or consequences of an accident previously evaluated; or (2) create the possibility of a new or different kind of accident from any accident previously evaluated; or (3) involve a significant reduction in a margin of safety. As required by 10 CFR 50.91(a), the licensee has provided its analysis of the issue of no significant hazards consideration, which is presented below:

1. The operation of Vermont Yankee Nuclear Power Station in accordance with the proposed amendment will not involve a significant increase in the probability or consequences of an accident previously evaluated.

The changes proposed add clarity, additional limitations, and relaxation to operability requirements and also reflect current surveillance practices. The proposed changes do not change the function nor needed range of operability pressures for the affected systems. The revisions ensure the applicability of operating requirements consistent with the design and operational bases of these systems.

The high pressure cooling systems (HPCI, RCIC and ADS) and the steam safety and relief valves do not initiate any accident considered in the Updated Final Safety Analysis Report. HPCI and ADS (with relief valves), as emergency core cooling systems, do function to mitigate accidents. Credit is not taken for RCIC in this regard. This change will not alter assumptions relative to the initiation or mitigation of any accident event.

The less restrictive changes proposed to not require operability of HPCI, ADS (and safety and relief valves) and RCIC at reactor steam pressures below 150 psig when irradiated fuel is in the reactor vessel and do not affect the probability of any accident previously evaluated. These changes furthermore do not significantly increase the consequences of accidents previously evaluated since reliance on these systems is not assumed below 150 psig.

The addition of required surveillance testing and completion times are intended to require a reduction in reactor pressure if HPCI and RCIC system operability requirements are not met. These additional Technical Specifications testing requirements and completion times are consistent with the current licensing basis and represent current practice.

The proposed changes do not involve accident initiators, do not change the configuration or method of operation of any equipment used to mitigate the consequences of an accident, and do not alter any conditions assumed in the plant accident analysis. Therefore, operation in accordance with the proposed changes would not involve a significant increase in the probability or consequences of an accident previously evaluated since there is no physical alteration of the plant configuration or relaxation of required setpoints or operating parameters.

2. The operation of Vermont Yankee Nuclear Power Station in accordance with the proposed amendment will not create the possibility of a new or different kind of accident from any accident previously evaluated.

The proposed changes will not modify the physical plant or the modes of plant operation. The changes do not involve the addition or modification of equipment nor do they alter the design or operation of plant systems. These changes to operability requirements do not create any new or different kind of accident since they do not

involve any change in the physical configuration of the plant, nor relaxation of required setpoints or operating parameters. Operation and design of the subject high pressure cooling systems (and the steam relief function) are not altered by the proposed changes.

The changes in operability requirements governing normal plant operation are consistent with the current safety analysis assumptions. These changes ensure adequate emergency core cooling system capability exists to mitigate the consequences of loss of coolant accidents without introducing new modes of operation.

Therefore, VY has determined that the proposed change does not create the possibility of a new or different kind of accident from any accident previously evaluated because the proposed changes are designed to clarify and add limitations to operation.

3. The operation of Vermont Yankee Nuclear Power Station in accordance with the proposed amendment will not involve a significant reduction in a margin of safety.

The proposed changes involve adding clarity, additional restrictions, and less restrictive requirements to current Technical Specifications without changing the safety bases. The added restrictions require an operability demonstration of HPCI and RCIC within an acceptable period of time following plant startup when testing is required.

These changes do not involve a significant reduction in a margin of safety because the assumptions used in analyses of postulated accidents are unchanged. The functional requirements of safety systems are also unaffected. Since equipment is expected to be operable, the delay (of up to 24 hours) in testing certain systems is acceptable based on the short time interval and is consistent with the allowable equipment out-of-service intervals.

The proposed changes to raise the Technical Specification minimum reactor steam pressure for operability to a consistent 150 psig for these systems do not involve a significant reduction in a margin of safety since these systems are not credited in the safety analyses to operate below 150 psig. The basis for any Technical Specification that is related to the establishment or maintenance of safety margins is not altered. Consequently, VY has determined that the proposed changes do not involve a significant reduction in a margin of safety since operation of the plant remains consistent with the plant's design and operational bases.

The NRC staff has reviewed the licensee's analysis and, based on this review, it appears that the three standards of 10 CFR 50.92(c) are satisfied. Therefore, the NRC staff proposes to determine that the amendment request involves no significant hazards consideration.

The Commission is seeking public comments on this proposed determination. Any comments received within 30 days after the date of publication of this notice will be considered in making any final determination.

Normally, the Commission will not issue the amendment until the expiration of the 30-day notice period. However, should circumstances change during the notice period such that failure to act in a timely way would result, for example, in derating or shutdown of the facility, the Commission may issue the license amendment before the expiration of the 30-day notice period, provided that its final determination is that the amendment involves no significant hazards consideration. The final determination will consider all public and State comments received. Should the Commission take this action, it will publish in the **Federal Register** a notice of issuance and provide for opportunity for a hearing after issuance. The Commission expects that the need to take this action will occur very infrequently.

Written comments may be submitted by mail to the Chief, Rules and Directives Branch, Division of Administrative Services, Office of Administration, U.S. Nuclear Regulatory Commission, Washington, DC 20555–0001, and should cite the publication date and page number of this **Federal Register** notice. Written comments may also be delivered to Room 6D59, Two White Flint North, 11545 Rockville Pike, Rockville, Maryland, from 7:30 a.m. to 4:15 p.m. Federal workdays. Copies of written comments received may be examined at the NRC Public Document Room, the Gelman Building, 2120 L Street, NW., Washington, DC.

The filing of requests for hearing and petitions for leave to intervene is discussed below.

By September 30, 1999, the licensee may file a request for a hearing with respect to issuance of the amendment to the subject facility operating license and any person whose interest may be affected by this proceeding and who wishes to participate as a party in the proceeding must file a written request for a hearing and a petition for leave to intervene. Requests for a hearing and a petition for leave to intervene shall be filed in accordance with the Commission's ''Rules of Practice for Domestic Licensing Proceedings'' in 10 CFR Part 2. Interested persons should consult a current copy of 10 CFR 2.714 which is available at the Commission's Public Document Room, the Gelman Building, 2120 L Street, NW., Washington, DC, and at the local public document room located at the Brooks Memorial Library, 224 Main Street, Brattleboro, VT. If a request for a hearing or petition for leave to intervene is filed by the above date, the Commission or an Atomic Safety and Licensing Board, designated by the Commission or by the Chairman of the Atomic Safety and Licensing Board Panel, will rule on the request and/or petition; and the Secretary or the designated Atomic Safety and Licensing Board will issue a notice of hearing or an appropriate order.

As required by 10 CFR 2.714, a petition for leave to intervene shall set forth with particularity the interest of the petitioner in the proceeding, and how that interest may be affected by the results of the proceeding. The petition should specifically explain the reasons why intervention should be permitted with particular reference to the following factors: (1) The nature of the petitioner's right under the Act to be made party to the proceeding; (2) the nature and extent of the petitioner's property, financial, or other interest in the proceeding; and (3) the possible effect of any order which may be entered in the proceeding on the petitioner's interest. The petition should also identify the specific aspect(s) of the subject matter of the proceeding as to which petitioner wishes to intervene. Any person who has filed a petition for leave to intervene or who has been admitted as a party may amend the petition without requesting leave of the Board up to 15 days prior to the first prehearing conference scheduled in the proceeding, but such an amended petition must satisfy the specificity requirements described above.

Not later than 15 days prior to the first prehearing conference scheduled in the proceeding, a petitioner shall file a supplement to the petition to intervene which must include a list of the contentions which are sought to be litigated in the matter. Each contention must consist of a specific statement of the issue of law or fact to be raised or controverted. In addition, the petitioner shall provide a brief explanation of the bases of the contention and a concise statement of the alleged facts or expert opinion which support the contention and on which the petitioner intends to rely in proving the contention at the hearing. The petitioner must also provide references to those specific sources and documents of which the petitioner is aware and on which the petitioner intends to rely to establish those facts or expert opinion. Petitioner must provide sufficient information to show that a genuine dispute exists with the applicant on a material issue of law or fact. Contentions shall be limited to matters within the scope of the amendment under consideration. The contention must be one which, if

proven, would entitle the petitioner to relief. A petitioner who fails to file such a supplement which satisfies these requirements with respect to at least one contention will not be permitted to participate as a party.

Those permitted to intervene become parties to the proceeding, subject to any limitations in the order granting leave to intervene, and have the opportunity to participate fully in the conduct of the hearing, including the opportunity to present evidence and cross-examine witnesses.

If a hearing is requested, the Commission will make a final determination on the issue of no significant hazards consideration. The final determination will serve to decide when the hearing is held.

If the final determination is that the amendment request involves no significant hazards consideration, the Commission may issue the amendment and make it immediately effective, notwithstanding the request for a hearing. Any hearing held would take place after issuance of the amendment.

If the final determination is that the amendment request involves a significant hazards consideration, any hearing held would take place before the issuance of any amendment.

A request for a hearing or a petition for leave to intervene must be filed with the Secretary of the Commission, U.S. Nuclear Regulatory Commission, Washington, DC 20555–0001, Attention: Rulemakings and Adjudications Staff, or may be delivered to the Commission's Public Document Room, the Gelman Building, 2120 L Street, NW., Washington, DC, by the above date. A copy of the petition should also be sent to the Office of the General Counsel, U.S. Nuclear Regulatory Commission, Washington, DC 20555–0001, and to David R. Lewis, Shaw, Pittman, Potts, and Trowbridge, 2300 N Street, NW., Washington, DC, 20037–1128 attorney for the licensee.

Nontimely filings of petitions for leave to intervene, amended petitions, supplemental petitions and/or requests for hearing will not be entertained absent a determination by the Commission, the presiding officer or the presiding Atomic Safety and Licensing Board that the petition and/or request should be granted based upon a balancing of the factors specified in 10 CFR 2.714(a)(1)(i)–(v) and 2.714(d).

For further details with respect to this action, see the application for amendment dated July 20, 1999, as supplemented August 17, 1999, which is available for public inspection at the Commission's Public Document Room, the Gelman Building, 2120 L Street, NW., Washington, DC, and at the local public document room located at the Brooks Memorial Library, 224 Main Street, Brattletoro, VT.

Dated at Rockville, Maryland, this 25th day of August, 1999.

For the Nuclear Regulatory Commission.

**Richard P. Croteau,**

*Project Manager, Section 2, Project Directorate I, Division of Licensing Project Management, Office of Nuclear Reactor Regulation.*

[FR Doc. 99–22650 Filed 8–30–99; 8:45 am]

BILLING CODE 7590–01–P

---

## NUCLEAR REGULATORY COMMISSION

### Advisory Committee on Reactor Safeguards Subcommittee on Thermal-Hydraulic Phenomena; Notice of Meeting

The ACRS Subcommittee on Thermal-Hydraulic Phenomena will hold a meeting on September 15–16, 1999, Room T–2B1, 11545 Rockville Pike, Rockville, Maryland.

The agenda for the subject meeting shall be as follows:

Wednesday, September 15, 1999—8:30 a.m. until the conclusion of business

Thursday, September 16, 1999—8:30 a.m. until 12:00 Noon

The Subcommittee will continue its review of the NRC Office of Nuclear Regulatory Research's thermal-hydraulic research program, including its plan for consolidating thermal-hydraulic codes, and the proposed resolution of Generic Safety Issue 23: ''Reactor Coolant Pump Seal Failures''. The purpose of this meeting is to gather information, analyze relevant issues and facts, and to formulate proposed positions and actions, as appropriate, for deliberation by the full Committee.

Oral statements may be presented by members of the public with the concurrence of the Subcommittee Chairman. Written statements will be accepted and made available to the Committee. Electronic recordings will be permitted only during those portions of the meeting that are open to the public, and questions may be asked only by members of the Subcommittee, its consultants, and staff. Persons desiring to make oral statements should notify the cognizant ACRS staff engineer named below five days prior to the meeting, if possible, so that appropriate arrangements can be made.

During the initial portion of the meeting, the Subcommittee, along with any of its consultants who may be present, may exchange preliminary views regarding matters to be considered during the balance of the meeting.

The Subcommittee will then hear presentations by and hold discussions with representatives of the NRC staff, and other interested persons regarding this review. Further information regarding topics to be discussed, whether the meeting has been canceled or rescheduled, the scheduling of sessions which are open to the public, and the Chairman's ruling on requests for the opportunity to present oral statements and the time allotted therefor, can be obtained by contacting the cognizant ACRS staff engineer, Mr. Paul A. Boehnert (telephone 301/415–8065) between 7:30 a.m. and 4:15 p.m. (EDT). Persons planning to attend this meeting are urged to contact the above named individual one or two working days prior to the meeting to be advised of any potential changes to the agenda, etc., that may have occurred.

Dated: August 23, 1999.

**Richard P. Savio,**

*Associate Director.*

*for Technical Support, ACRS/ACNW.*

[FR Doc. 99–22491 Filed 8–30–99; 8:45 am]

BILLING CODE 7590–01–P

---

## NUCLEAR REGULATORY COMMISSION

### Advisory Committee on Reactor Safeguards, Subcommittee Meeting on Severe Accident Management; Notice of Meeting

The ACRS Subcommittee on Severe Accident Management will hold a meeting on September 16 (Room T–2B1) and 17 (Room T–2B3), 1999, 11545 Rockville Pike, Rockville, Maryland.

The agenda for the subject meeting shall be as follows:

*Thursday, September 16, 1999—1:00 p.m. until the conclusion of business*

*Friday, September 17, 1999—8:30 a.m. until the conclusion of business*

The Subcommittee will review the modifications proposed by the Combustion Engineering Owners Group (CEOG) to the Post Accident Sampling System requirements for CEOG nuclear power plant utilities. The Subcommittee will also review the status of NRC staff and nuclear industry activities pertaining to the issue of control room integrity. The purpose of this meeting is to gather information, analyze relevant issues and facts, and to formulate proposed positions and actions, as appropriate, for deliberation by the full Committee.

Oral statements may be presented by members of the public with the concurrence of the Subcommittee Chairman. Written statements will be accepted and made available to the Committee. Electronic recordings will be permitted only during those portions of the meeting that are open to the public, and questions may be asked only by members of the Subcommittee, its consultants, and staff. Persons desiring to make oral statements should notify the cognizant ACRS staff engineer named below five days prior to the meeting, if possible, so that appropriate arrangements can be made.

During the initial portion of the meeting, the Subcommittee, along with any of its consultants who may be present, may exchange preliminary views regarding matters to be considered during the balance of the meeting.

The Subcommittee will then hear presentations by and hold discussions with representatives of the NRC staff, the Combustion Engineering Owners Group and other interested persons regarding this review. Further information regarding topics to be discussed, whether the meeting has been canceled or rescheduled, the scheduling of sessions which are open to the public, and the Chairman's ruling on requests for the opportunity to present oral statements and the time allotted therefor, can be obtained by contacting the cognizant ACRS staff engineer, Mr. Paul A. Boehnert (telephone 301/415–8065) between 7:30 a.m. and 4:15 p.m. (EDT). Persons planning to attend this meeting are urged to contact the above named individual one or two working days prior to the meeting to be advised of any potential changes to the agenda, etc., that may have occurred.

Dated: August 23, 1999.

**Richard P. Savio,**

*Associate Director for Technical Support, ACRS/ACNW.*

[FR Doc. 99–22492 Filed 8–30–99; 8:45 am]

BILLING CODE 7590–01–P

## NUCLEAR REGULATORY COMMISSION

### Sunshine Act Meeting

**AGENCY HOLDING THE MEETING:** Nuclear Regulatory Commission.

**DATES:** Weeks of August 30, September 6, 12, 30, and October 18, 1999.

**PLACE:** Commissioner's Conference Room, 11555 Rockville Pike, Rockville, Maryland.

**STATUS:** Public and Closed.

**MATTERS TO BE CONSIDERED:**

**Week of August 30**

*Wednesday, September 1*

9:25 a.m.—Affirmation Session (Public Meeting) (If needed)

**Week of September 6—Tenative**

*Tuesday, September 7*

9:15 a.m.—Affirmation Session (Public Meeting) (if needed)

9:20 a.m.—Briefing on PRA Implementation Plan (Pubic Meeting) (Contact: Tom King, 301–415–5790)

**Week of September 13—Tenative**

There are no meetings scheduled for the Week of September 13.

**Week of September 20—Tenative**

*Tuesday, September 21*

9:25 a.m.—Affirmative Session (Public Meeting) (if needed)

9:30 a.m.—Briefing by DOE on Draft Environmental Impact Statement (DEIS) for a Proposed HLW Geologic Repository (Public Meeting)

**Week of October 18—Tentative**

*Thursday, October 21*

9:30 a.m.—Briefing on Part 35—Rule on Medical Use of Byproduct Material (Contact: Cathy Haney, 301–415–6825) (SECY–99–201, *Draft Final Rule—10 CFR Part 35, Medical Use of Byproduct Material,* is available in the NRC Public Document Room or on NRC web site at ''www.nrc.gov/NRC/COMMISSION/SECY/index.html''. Download the *zipped version* to obtain all attachments.)

*The schedule for Commission meetings is subject to change on short notice. To verify the status of meetings call (recording)—(301) 415–1292. Contact person for more information: Bill Hill (301) 415–1661.

* * * * *

**ADDITIONAL INFORMATION:** By a vote of 4–0 on August 24, the Commission determined pursuant to U.S.C. 552b(e) and § 9.107(a) of the Commission's rules that ''Affirmation of Final Rule—Changes to Requirements for Environmental Review for Nuclear Power Plant Operating Licenses (10 CFR Part 51)'' (PUBLIC MEETINGS) be held on August 24, and on less than one week's notice to the public.

By vote of 4–0 on August 25, the Commission determined pursuant to U.S.C. 552b(e) and § 9.107(a) of the Commission's rules that ''Affirmation of Final Rule: Expand Applicability of 10 CFR Part 72 to Holders of, and Applicants for, Certificates of Compliance, and Their Contractors and Subcontractors'' (PUBLIC MEETING) be held on August 25, and on less than one week's notice to the public.

* * * * *

The NRC Commission Meeting Schedule can be found on the Internet at: http://www.nrc.gov/SECY/smj/schedule.htm

* * * * *

This notice is distributed by mail to several hundred subscribers; if you no longer wish to receive it, or would like to be added to it, please contact the Office of the Secretary, Attn: Operations Branch, Washington, DC 20555 (301–415–1661). In addition, distribution of this meeting notice over the Internet system is available. If you are interested in receiving this Commission meeting schedule electronically, please send an electronic message to wmh@nrc.gov or dkw@nrc.gov.

Dated: August 27, 1999.

**William M. Hill, Jr.,**

*SECY Tracking Officer, Office of the Secretary.*

[FR Doc. 99–22763 Filed 8–27–99; 2:12 pm]

BILLING CODE 7590–01–M

## NUCLEAR REGULATORY COMMISSION

### Notice of Availability of the Interagency Steering Committee on Radiation Standards 1998 Annual Report

The Interagency Steering Committee on Radiation Standards (ISCORS) is noticing issuance of NUREG–1707, ''Interagency Steering Committee on Radiation Standards: 1998 Annual Report.'' ISCORS was formed to foster early resolution and coordination of regulatory issues associated with radiation standards. The 1998 Annual Report was prepared to report to ISCORS member agencies on ISCORS' activities and plans. The report identifies both the past accomplishments and goals for the future that will be a basis for assessing performance in 1999. The report provides the contacts for each agency and describes the subcommittee activities. The subcommittees include Clean-up, Mixed Waste, Recycle, Risk Harmonization, Sewage Sludge, NORM, and Federal Guidance. Agencies represented on ISCORS include the U.S. Nuclear Regulatory Commission, U.S. Environmental Protection Agency, U.S. Department of Energy, U.S. Department of Defense, U.S. Department of Labor's

Occupational Health and Safety Administration, U.S. Department of Transportation, and U.S. Department of Health and Human Services. Representatives from the Office of Science and Technology Policy, Office of Management and Budget, and States are observer members on ISCORS.

NUREG–1707 is on the NRC website at *http://www.nrc.gov/NRC/*NUREGS/SR1707/index.html. Copies of NUREG–1707 may also be examined or copied for a fee at the NRC Public Document Room, 2120 L Street, NW (Lower Level), Washington, DC 20555–0001; telephone 202–634–3273; fax 202–634–3343. NRC publications in the NUREG series may also be purchased from one of the following sources:

The Superintendent of Documents, U.S. Government Printing Office, P.O. Box 37082, Washington, DC 20402–9328, *http://www.access.gpo.gov/su__*docs 202–512–1800

The National Technical Information Service, Springfield, VA 22161–0002, *http://www.ntis.gov/ordernow,* 703–487–4650

*For Further Information, Contact:* Patricia A. Santiago, Office of Nuclear Material Safety and Safeguards, U.S. Nuclear Regulatory Commission, Washington, DC 20555; telephone 301–415–7269; fax 301–415–5398; E-mail *pas2@NRC.GOV*.

Dated at Rockville, Maryland, this 17th day of June, 1999.

For the Nuclear Regulatory Commission.

**John W. N. Hickey,**

*Chief, Decommissioning Branch, Division of Waste Management, Office of Nuclear Material Safety and Safeguards.*

[FR Doc. 99–22649 Filed 8–30–99; 8:45 am]

BILLING CODE 7590–01–P

## RAILROAD RETIREMENT BOARD

### Agency Forms Submitted for OMB Review

**SUMMARY:** In accordance with the Paperwork Reduction Act of 1995 (44 U.S.C. Chapter 35), the Railroad Retirement Board (RRB) has submitted the following proposal(s) for the collection of information to the Office of Management and Budget for review and approval.

**Summary of Proposal(s)**

(1) *Collection title:* Medical Reports.

(2) *Form(s) submitted:* G–3EMP, G–250, G–250a, G–260, RL–11b, RL–11d.

(3) *OMB Number:* 3220–0038.

(4) *Expiration date of current OMB clearance:* 12/31/1999.

(5) *Type of request:* Revision of a currently approved collection.

(6) *Respondents:* Business or other-for-profit, non-profit institutions, state, local or tribal government.

(7) *Estimated annual number of respondents:* 29,950.

(8) *Total annual responses:* 29,950.

(9) *Total annual reporting hours:* 12,417.

(10) *Collection description:* The Railroad Retirement Act provides disability annuities for qualified railroad employees whose physical or mental condition renders them incapable of working in their regular (occupational disability) or any occupation (total disability). The medical reports obtain information needed for determining the nature and severity of the impairment.

**Additional Information or Comments**

Copies of the form and supporting documents can be obtained from Chuck Mierzwa, the agency clearance officer (312–751–3363). Comments regarding the information collection should be addressed to Ronald J. Hodapp, Railroad Retirement Board, 844 North Rush Street, Chicago, Illinois, 60611–2092 and the OMB reviewer, Laurie Schack (202–395–7316), Office of Management and Budget, Room 10230, New Executive Office Building, Washington, DC 20503.

**Chuck Mierzwa,**

*Clearance Officer.*

[FR Doc 99–22548 Filed 8–30–99; 8:45 am]

BILLING CODE 7905–01–M

## SECURITIES AND EXCHANGE COMMISSION

### Requests Under Review by Office of Management and Budget

Upon Written Request, Copies Available From: Securities and Exchange Commission, Office of Filings and Information Services, Washington, DC 20549.

Extension:

Rule 17a–19 and Form X–17A–19, SEC File No. 270–148, OMB Control No. 3235–0133

Notice is hereby given that, pursuant to the Paperwork Reduction Act of 1995 (44 U.S.C. 3501 *et seq.*), the Securities and Exchange Commission (''Commission'') has submitted to the Office of Management and Budget a request for approval of extension on the following rule:

Rule 17a–19 requires National Securities Exchange and Registered National Securities Associations to file a Form X–17A–19 with the Commission within 5 days of the initiation, suspension or termination of a member in order to notify the Commission that a change in designated examinating authority may be necessary.

It is anticipated that approximately eight National Securities Exchanges and Registered National Securities Associations collectively will make 3,000 total annual filings pursuant to Rule 17a–19 and that each filing will take approximately 15 minutes. The total burden is estimated to be approximately 750 total annual hours.

An agency may not conduct or sponsor, and a person is not required to respond to, a collection of information unless it displays a currently valid control number.

Written comments regarding the above information should be directed to the following persons: (i) Desk Officer for the Securities and Exchange Commission, Office of Information and Regulatory Affairs, Office of Management and Budget, Room 10102, New Executive Office Building, Washington, DC 20503; and (ii) Michael E. Bartell, Associate Executive Director, Office of Information Technology, Securities and Exchange Commission, 450 Fifth Street, NW, Washington, DC 20549. Comments must be submitted to OMB within 30 days of this notice.

Dated: August 23, 1999.

**Margaret H. McFarland,**

*Deputy Secretary.*

[FR Doc. 99–22549 Filed 8–30–99; 8:45 am]

BILLING CODE 8010–01–M

## SECURITIES AND EXCHANGE COMMISSION

**[Release No. IC–23966; File No. 812–11516]**

### Mitchell Hutchins Series Trust, et al.; Notice of Application

August 24, 1999.

**AGENCY:** Securities and Exchange Commission (''Commission'').

**ACTION:** Notice of application for an order pursuant to Section 6(c) of the Investment Company Act of 1940 (''1940 Act''), granting exemptive relief from Sections 9(a), 13(a), 15(a) and 15(b) of the 1940 Act and Rules 6e–2(b)(15) and 6e–3(T)(b)(15) thereunder.

**Summary of Application**

Applicants seek an order of exemption to the extent necessary to permit shares of the Mitchell Hutchins Series Trust (''Fund'') and shares of other Insurance Products Funds, as defined below, to be sold to and held by: (a) variable annuity and variable life insurance separate accounts of both affiliated and unaffiliated life insurance

companies; and (b) qualified pension and retirement plans outside of the separate account context (''Qualified Plans'' or ''Plans'').

**Applicants**

Mitchell Hutchins Series Trust and Mitchell Hutchins Asset Management Inc.(''Mitchell Hutchins'').

**Filing Date**

The Application was filed on February 19, 1999, and amended and restated on August 13, 1999.

**Hearing or Notification of Hearing**

An order (''Order'') granting the application will be issued unless the Commission orders a hearing. Interested persons may request a hearing by writing to the Secretary of the Commission and serving Applicants with a copy of the request, personally or by mail. Hearing requests must be received by the Commission by 5:30 p.m. on September 20, 1999, and should be accompanied by proof of service on the Applicants in the form of an affidavit or, for lawyers, a certificate of service. Hearing requests should state the nature of the writer's interest, the reason for the request and the issues contested. Persons may request notification of the date of a hearing by writing to the Secretary of the Commission.

**ADDRESSES:** Secretary, Commission, 450 Fifth Street, N.W., Washington, D.C. 20549–0609. Applicants, c/o Dianne E. O'Donnell, Deputy General Counsel, Mitchell Hutchins Asset Management Inc., 1285 Avenue of the Americas, New York, New York 10019.

**FOR FURTHER INFORMATION CONTACT:** Paul G. Cellupica, Senior Counsel, or Kevin M. Kirchoff, Branch Chief, Office of Insurance Products, Division of Investment Management, at (202) 942–0670.

**SUPPLEMENTARY INFORMATION:** The following is a summary of the application. The complete application is available for a fee from the Commission's Public Reference Branch, 450 Fifth Street, N.W., Washington, D.C. 20549 (202–942–8090).

**Applicants' Representations**

1. The fund is a Massachusetts business trust registered under the 1940 Act as an open-end management company. The Fund currently is comprised of thirteen separately managed series, each of which consists of two classes of shares and has its own investment objective and policies. Additional series could be added in the future. Other Insurance Products Funds are those other investment companies or investment company series for which Mitchell Hutchins, PaineWebber Incorporated (''PaineWebber'') or any of their affiliates serve, now or in the future, an investment adviser, administrator, manager, principal underwriter or sponsor and which offer their shares only to insurance company separate accounts.

2. Mitchell Hutchins serves as the investment adviser and administrator for each of the Fund's series. Mitchell Hutchins is a wholly owned asset management subsidiary of Paine Webber, which in turn is a wholly owned subsidiary of Paine Webber Group Inc. (''PW Group''), a publicly held financial services holding company.

3. Pacific Investment Management Company (''PIMCO'') serves as the sub-adviser for Strategic Fixed Income Portfolio. PIMCO is a subsidiary partnership of PIMCO Advisers L.P., a publicly held investment advisory firm.

4. Nicholas-Applegate Capital Management (''NACM''), a California limited partnership, serves as the sub-adviser for Aggressive Growth Portfolio. NACM's general partner is Nicholas-Applegate Capital Management Holdings, L.P., a California limited partnership controlled by Arthur E. Nicholas.

5. Invista Capital Management Inc. (''Invista'') serves as the sub-adviser for Global Growth Portfolio's foreign investments. Invista is an indirect wholly owned subsidiary of Principal Life Insurance Company.

6. The Fund currently offers its shares exclusively to insurance company separate accounts that fund variable annuity contracts. Applicants propose that shares of each Insurance Product Fund be offered to affiliated and unaffiliated insurance companies for their separate accounts as an investment vehicle to fund various insurance products including, among others, variable annuity contracts, variable group life insurance contracts, scheduled premium variable life insurance contracts, single premium and modified single premium variable life insurance contracts, and flexible premium variable life insurance contracts (collectively, ''Variable Contracts''). Some of these separate accounts may not be registered as investment companies under the 1940 Act pursuant to the exceptions from registration in Section 3(c)(1), 3(c)((7) and 3(c)(11) of the Act. In addition, Applicants propose that shares of each Insurance Product Fund also be offered directly to Qualified Plans. Separate accounts owning shares of the Insurance Product Funds and their insurance company depositors are referred to herein as ''Participating Separate Accounts'' and ''Participating Insurance Companies,'' respectively.

7. The use of a common management investment company as the underlying investment medium for both variable annuity and variable life insurance separate accounts of a single insurance company (or of two or more affiliated insurance companies) is referred to as ''mixed funding.'' The use of a common investment company as the underlying investment medium for separate accounts of unaffiliated insurance companies is referred to as ''shared funding.'' The use of a common investment company as the underlying investment medium for variable annuity and variable life separate accounts of affiliated and unaffiliated insurance companies and for Qualified Plans is referred to as ''extended mixed and shared funding.''

**Applicants' Legal Analysis**

1. Section 6(c) of the 1940 Act authorizes the Commission to exempt any person, security or transaction, or any class or classes of person, securities or transactions from any provisions of the 1940 Act or the rules or regulations thereunder, if and to the extend that such exemption is necessary or appropriate in the public interest and consistent with the protection of investors and the purposes fairly intended by the policy and provisions of the 1940 Act.

2. In connection with scheduled premium variable life insurance contracts issued through a separate account registered under the 1940 Act as a unit investment trust (''UIT''), Rule 6e–2(b)(15) provides partial exemptions from the following sections of the 1940 Act: (a) Section 9(a), which makes it unlawful for any company to serve as an investment adviser or principal underwriter of any registered UIT if an affiliated person of that company is subject to a disqualification enumerated in Section 9(a) (1) or (2); and (b) Sections 13(a), 15(a) and 15(b) of the 1940 Act, to the extent that those sections might be deemed to require ''pass-through'' voting with respect to an underlying investment company's shares.

3. The exemptions granted by Rule 6e–2(b)(15), however, are available only if the management investment companies underlying the UIT (''underlying funds'') offer their shares ''*exclusively* to variable life insurance separate accounts of the life insurer, or any affiliated life insurance company'' (emphasis added). Therefore, Rule 6e–2

does not permit either mixed or shared funding because the relief granted by Rule 6e–2(b)(15) is not available with respect to a scheduled premium variable life insurance separate account that owns shares of an underlying fund that also offers its shares to a variable annuity or a flexible premium variable life insurance account of the same company or of any affiliated or unaffiliated life insurance company. This rule also does not contemplate that shares of the underlying fund might also be sold to Qualified Plans.

4. In connection with flexible premium variable life insurance contracts issued through a separate account registered under the 1940 Act as a UIT, Rule 6e–3(T)(b)(15) provides partial exemptions from Sections 9(a), and from Sections 13(a), 15(a) and 15(b) of the 1940 Act to the extent that those sections might be deemed by the Commission to require ''pass-through'' voting with respect to an underlying fund's shares.

5. The exemptions granted by Rule 6e–3(T) are available only where the UIT's underlying funds offer their shares ''*exclusively* to separate accounts of the life insurer, or of any affiliated life insurance company, offering either scheduled contracts or flexible contracts, or both; or which also offer their shares to variable annuity separate accounts of the life insurer or of an affiliated life insurance company'' (emphasis added). Therefore, Rule 6e–3(T) permits mixed funding but does not permit shared funding. Rule 6e–3(T) also does not contemplate that shares of the underlying fund might also be sold to Qualified Plans.

6. Section 817(h) of the Internal Revenue Code of 1986, as amended (''Code''), imposes certain diversification standards on the underlying assets of Variable Contracts held in the portfolios of management investment companies. The Code provides that a Variable Contract shall not be treated as an annuity contract or life insurance contract, as applicable, for any period (and any subsequent period) for which the investments are not adequately diversified in accordance with regulations issued by the Treasury Department. Treasury Regulation § 1.817–5, which establishes diversification requirements for such portfolios, specifically permits, among other things, qualified pension or retirement plans, general accounts and separate accounts to share the same underlying management investment company. As a result, Qualified Plans may invest in Insurance Product Funds without endangering the tax status of Variable Contracts issued through Participating Insurance Companies. Shares of the Insurance Product Funds sold to Qualified Plans would be held by the trustees of those Plans as required by Section 403(a) of the Employee Retirement Income Security Act (''ERISA'').

7. The promulgation of Rules 6e–2(b)(15) and 6e–3(T)(b)(15) preceded the issuance of the Treasury regulations that made it possible for shares of an investment company to be held by the trustees of Qualified Plans without adversely affecting the ability of separate accounts of insurance companies to hold shares of the same investment company in connection with their variable annuity and variable life contracts. Thus, the sale of shares of the same investment company to separate accounts and Qualified Plans could not have been envisioned at the time of the adoption of Rules 6e–2(b)(15) and 6e–3(T) (b)(15).

8. Applicants note that if the Insurance Product Funds were to sell shares only to Qualified Plans, exemptive relief under Rule 6e–2 and Rule 6e–3(T) would not be necessary. The relief provided by Rule 6e–2(b)(15) and Rule 6e–3(T)(b)(15) does not relate to qualified pension and retirement plans or to a registered investment company's ability to sell its shares to such entities.

9. Applicants are not aware of any stated rationale for excluding separate accounts and investment companies, or series thereof, engaged in shared funding from the exemptive relief provided under Rules 6e–2(b)(15) and 6e–3T (b)(15) or for excluding separate accounts and investment companies, or series thereof, engaged in mixed funding from the exemptive relief provided under Rule 6e–2(b)(15). Indeed, the Commission's proposed amendments to Rule 6e–2 would eliminate the exclusion of mixed funding from the relief provided under Rule 6e–2(b)(15) and numerous exemptions permitting both mixed and shared funding have been granted since the adoption of Rules 6e–2 and 6e–3.

10. Applicants similarly are not aware of any stated rationale for excluding Participating Insurance Companies from the exemptive relief requested because shares of the Insurance Products Funds may also sell their respective shares to Qualified Plans. The relief provided under Rules 6e–2(b)(15) and 6e–3(T)(b)(15) does not relate to Qualified Plans or to a registered investment company's ability to sell its shares to such entities. Because the relief accorded under such Rules is available where shares are offered *exclusively* to separate accounts, Applicants believe that additional exemptive relief is required if shares of Insurance Product Funds are also to be sold to Plans. The Commission has granted numerous exemptions permitting extended mixed and shared funding.

11. Applicants believe that the same policies and considerations that led the Commission to grant exemptions to other applicants for extended mixed and shared funding are present here. Moreover, Applicants believe that the requested exemptions are appropriate in the public interest and consistent with the protection of investors and the purposes fairly intended by the policy and provisions of the 1940 Act.

12. Section 9(a)(3) of the 1940 Act provides that it is unlawful for any company to serve as investment adviser or principal underwriter of any registered open-end investment company if an affiliated person of that company is subject to a disqualification enumerated in Section 9(a) (1) or (2). However, Rules 6e–2(b)(15) (i) and (ii) and 6e–3(T)(b)(15) (i) and (ii) provide partial exemptions from Section 9(a) under certain circumstances, subject to the limitations discussed above on mixed and shared funding. These exemptions limit the eligibility restrictions to affiliated individuals or companies that directly participate in the management or administration of the underlying investment company or series thereof.

13. Rules 6e–2(b)(15)(i) and 6e–3(T)(b)(15)(i) allow an individual disqualified under Section 9(a) (1) or (2) to be an officer, director, or employee of an insurance company, or any of its affiliates that serves in any capacity with respect to an underlying investment company, so long as the disqualified individual does not participate directly in the management or administration of the underlying investment company. Similarly, Rules 6e–2(b)(15)(ii) and 6e–3(T)(b)(15)(ii) permit an insurance company disqualified under Section 9(a)(3) of the 1940 Act to serve in any capacity with respect to an underlying investment company, provided that the affiliated person of the disqualified company, ineligible under Section 9(a) (1) or (2) of the 1940 Act, does not participate directly in the management or administration of the investment company.

14. The partial relief granted in Rules 6–2(b)(15) and 6e–3(T)(b)(15) from the requirements of Section 9 limits, in effect, the amount of monitoring of an insurer's personnel that would otherwise be necessary to ensure compliance with Section 9 to that which is appropriate in light of the policy and

purposes of Section 9. These rules recognize that it is not necessary for the protection of investors or the purposes fairly intended by the policy and provisions of the 1940 Act to apply Section 9(a) to the many individuals who may be involved in a large insurance company but would have no connection with the investment company funding the separate accounts. Applicants believe that it is unnecessary to limit the applicability of these rules merely because shares of the Insurance Products Funds may be sold in connection with mixed and shared funding. Since the Participating Insurance Companies and Qualified Plans are not expected to play any role in the management or administration of the Insurance Products Funds, Applicants assert that applying the restrictions of Section 9(a) serves no regulatory purpose. Applicants further assert that applying such restrictions would increase the monitoring costs incurred by the Participating Insurance Companies and, therefore, would reduce the net rates of return realized by Variable Contract owners.

15. Moreover, appropriateness of the relief requested will not be affected by the proposed sale of shares of Insurance Products Funds to Qualified Plans. The insulation of the Insurance Product Fund from those individuals who are disqualified under the 1940 Act remains in place. Applying the requirements of section 9(a) because of investment by Qualified Plans would be unjustified and would not serve any regulatory purpose. Since the Qualified Plans are not investment companies and will not be deemed to be affiliated solely by virtue of their shareholdings, no additional relief is necessary.

16. Rules 6e–2(b)915)(iii) and 6e–3(T)(b)(15)(iii) assume that contract owners are entitled to pass-through voting privileges with respect to investment company shares held by a related separate account. However, if the limitations on mixed and shared funding are satisfied, Rules 6e–2(b)(15)(iii) and 6e–3(T)(b)(15)(iii) provide exemptions from the pass-through requirements in limited situations. These rules provide that an insurance company may disregard the voting instructions of its contract owners with respect to the investments of an underlying investment company or any contract between an investment company and its investment adviser, when an insurance regulatory authority so requires (subject to the provisions of paragraphs (b)(5)(i) and (b)(7)(ii)(A) of the rules). In addition, Rules 6e–2(b)(15)(iii)(B) and 6e–3(T)(b)(15)(iii)(A)(*2*) provide that the insurance company may disregard contract owners' voting instructions with regard to certain changes initiated by the contract owners in the investment company's investment policies, principal underwriter or investment adviser.

17. The Commission has deemed exemptions from the pass-through voting requirements as necessary to assure the solvency of the life insurer and the performance of its contractual obligations and therefore has enabled an insurance regulatory authority or the life insurer to act when certain proposals reasonably could be expected to increase the risks undertaken by the life insurer. Applicants assert that these considerations are no less important or necessary when an insurance company funds its separate accounts in connection with mixed and shared funding. Such funding does not compromise the goals of the insurance regulatory authorities or of the Commission. While the Commission may have wished to reserve wide latitude with respect to the once unfamiliar variable annuity product, that product is now familiar and there appears to be no reason for the maintenance of prohibitions against mixed and shared funding arrangements. Indeed, by permitting such arrangements, the Commission eliminates needless duplication of start-up and administrative expenses and potentially increases an investment company's assets, thereby making effective portfolio management strategies easier to implement and promoting other economies of scale.

18. In addition, the Insurance Products funds' sale of shares to Qualified Plans will have no impact on the relief requested in this regard. Shares of the Insurance Products Funds sold to Qualified Plans would be held by the trustees of said Plans as mandated by Section 403(a) of ERISA. Section 403(a) provides that the trustee(s) must have exclusive authority and discretion to manage and control the Plan with two exceptions: (a) when the Plan expressly provides that the trustee(s) is (are) subject to the direction of a named fiduciary who is not a trustee, in which case the trustee(s) is (are) subject to proper directions made in accordance with the terms of the Plan and not contrary to ERISA; and (b) when the authority to manage, acquire or dispose of assets of the Plan is delegated to one or more investment managers pursuant to Section 402(c)(3) of ERISA. Unless one of the two exceptions stated in Section 403(a) applies, Plan trustees have the exclusive authority and responsibility for voting proxies. Where a named fiduciary appoints an investment manager, the investment manager has the responsibility to vote the shares held unless the right to vote such shares is reserved to the trustees or the named fiduciary. Accordingly, unlike the case with insurance company separate accounts, the issue of the resolution of material irreconcilable conflicts with respect to voting is not present with respect to Qualified Plans since such plans are not entitled to pass-through voting privileges.

19. Even if a Qualified Plan were to hold a controlling interest in an Insurance Product Fund, Applicants do not believe that such control would disadvantage other investors in that Insurance Product Fund to any greater extent than is the case when any institutional shareholder holds a majority of the voting securities of any open-end management investment company. In this regard, Applicants submit that investment in an Insurance Product Fund by a Qualified Plan will not create any of the voting complications occasioned by mixed or shared funding. Unlike mixed or shared funding, Plan investor voting rights cannot be frustrated by veto rights of insurers or state regulators.

20. The Qualified Plan may have their trustees or other fiduciaries exercise voting rights attributable to investment securities held by the Qualified Plan in their discretion. Some of the Qualified Plans, however, may provide for the trustees, an investment adviser or another named fiduciary to exercise voting rights in accordance with instructions from participants.

21. Where a Qualified Plan does not provide participants with the right to give voting instructions, the Applicants submit that there is no potential for material irreconcilable conflicts of interest between or among Variable Contract owners and Plan investors with respect to voting of the respective Insurance Product Fund's shares.

22. Where a Plan provides participants with the right to give voting instructions, Applicants likewise submit that there is no reason to believe that participants in Qualified Plans generally or those in a particular Plan, either as a single group or in combination with participants in other Qualified Plans, would vote in a manner that would disadvantage Variable Contract owners. The purchase of shares of the Insurance Product Funds by Qualified Plans that provide voting rights does not present an complications not otherwise occasioned by mixed or shared funding.

23. Applicants assert that shared funding does not present any conflict of interest issues that do not already exist

when a single insurance company is licensed to do business in several states. For example, when different Participating Insurance Companies are domiciled in different states, it is possible that the state insurance regulatory body in a state in which one Participating Insurance Company is domiciled could require action that is inconsistent with the requirements of insurance regulators in one or more other states in which other Participating Insurance Companies are domiciled. That possibility, however, is no different and no greater than that which exists when a single insurer and its affiliates offer their insurance products in several states, as currently is permitted.

24. In addition, affiliations among insurers do not reduce the potential, if any exists, for differences in state regulatory requirements. In any event, the conditions discussed below (which are adapted from the conditions included in Rule 6e-3(T)(b)(15)) are designed to safeguard against any adverse effects that differences among state regulatory requirements may produce. Similarly, affiliation does not eliminate the potential, if any exists, for divergent judgments as to when a Participating Insurance Company could disregard contract owner voting instructions. The potential for disagreement in limited by the requirement that disregarding voting instructions be reasonable and based on specified good faith determinations. However, if a particular state insurance regulator's decision conflicts with the majority of other state regulators or if a Participating Insurance Company's decision to disregard contract owner voting instructions represents a minority position or would preclude a majority vote approving a particular change, the Participating Insurance Company may be required, at the election of the relevant Insurance Products Fund, to withdraw its Participating Separate Accounts' investment in that fund and no charge or penalty will be imposed as a result of such withdrawal.

25. Similarly, there is no reason why the investment policies of an Insurance Products Fund that engages in mixed funding would or should materially differ from what those policies would or should be if that fund only supported variable annuity or only variable life insurance contracts. Hence, there is no reason to believe that conflicts of interest would result from mixed funding. Moreover, no one investment strategy can be identified as appropriate to a particular insurance product. Each pool of variable annuity and variable life insurance contract owners is composed of individuals of diverse financial status, age, insurance and investment goals. Those diversities are of greater significance than any differences in insurance products. An investment company supporting even one type of insurance product must accommodate those diverse factors. The sale of shares to Qualified Plans should not increase the potential for material irreconcilable conflicts of interest between or among different types of investors. There should be very little potential for such conflicts beyond that which would otherwise exist between variable annuity and variable life contract owners.

26. Moreover, the Code, Treasury regulations, and revenue rulings do not present any inherent conflicts of interest if Qualified Plans and separate accounts invest in the same underlying investment company. As described above, Section 817(h) imposes certain diversification standards on the underlying assets of variable annuity contracts and variable life contracts held in the portfolios of management investment companies. However, Treasury Regulation § 1.817–5(f)(3), which established diversification requirements for such portfolios, specifically permits, among other things, qualified pension or retirement plans, general accounts and separate accounts to share the same underlying management investment company.

27. While there are differences in the manner in which distributions from Variable Contracts and Qualified Plans are taxed, these tax consequences do not raise any conflicts of interest. When distributions are to be made, and a Participating Separate Account or Qualified Plan cannot net purchase payments to make the distributions, the Participating Separate Account and Qualified Plan will redeem shares of the Insurance Product Funds at their respective net asset value in conformity with Rule 22c-1 under the 1940 Act to provide proceeds to meet distribution needs. The Qualified Plan will then make distributions in accordance with the terms of the Plan. The Participating Life Insurance Company will surrender values from the Participating Separate Account into the general account to make distributions in accordance with the terms of the Variable Contract.

28. It is possible to provide an equitable means of giving voting rights to Participating Separate Account contract owners and Qualified Plans. The transfer agent for the Insurance Product Fund will inform each Participating Insurance Company of each Participating Separate Account's share ownership in the Fund, as well as inform the trustees of Qualified Plans of their holdings. Each Participating Insurance Company then will solicit voting instructions in accordance with Rules 6e-2 and 6e-3(T), as applicable, and its participation agreement with the relevant Insurance Product Fund. Shares held by Qualified Plans will be voted in accordance with applicable law. The voting rights provided to Qualified Plans with respect to shares of Insurance Product Funds would be no different from the voting rights that are provided to Qualified Plans with respect to shares of funds sold to the general public.

29. The ability of Insurance Products Funds to sell their respective shares directly to Qualified Plans does not create a ''senior security,'' as such term is defined under Section 18(g) of the 1940 Act, with respect to any contract owner as opposed to a Qualified Plan participant. As noted above, regardless of the rights and benefits of Qualified Plan participants or contract owners, the Qualified Plans and Participating Separate Accounts only have rights with respect to their respective shares of the Fund. They can only redeem such shares at their net asset value. No shareholder of any of the Insurance Products Funds has any preference over any other shareholder with respect to distribution of assets or payment of dividends.

30. There are no conflicts between the contract owners of Participating Separate Accounts and Qualified Plan participants with respect to the state insurance commissioner's veto powers (direct with respect to variable life and indirect with respect to variable annuity) over investment objectives. The basic premise of shareholder voting is that shareholders may not all agree with a particular proposal. While the interests and opinions of shareholders may differ, however, this does not mean that there are any inherent conflicts of interest between or among such shareholders. State insurance commissioners have been given the veto power in recognition of the fact that insurance companies usually cannot simply redeem their separate accounts out of one fund and invest in another. Generally, time-consuming, complex transactions must be undertaken to accomplish such redemptions and transfers. Trustees of Qualified Plans, on the other hand, can make the decision quickly and redeem their shares of an Insurance Products Fund and reinvest in another funding vehicle without the same regulatory impediments faced by separate accounts or, as is the case with most Plans, even hold cash pending

suitable investment. Based on the foregoing, even if there should arise issues where the interests of contract owners and the interests of Qualified Plan participants are in conflict, the issues can be almost immediately resolved because the trustees of the Qualified Plans can, on their own, redeem the shares out of the Insurance Product Funds.

31. There does not appear to be any greater potential for material irreconcilable conflicts arising between the interests of Qualified Plan participants and the contract owners from possible future changes in federal tax laws than that which already exists between variable annuity contract owners and variable life contract owners.

32. Applicants have concluded that even if there should arise issues where the interests of Variable Contract owners and the interests of Qualified Plan participants are in conflict, the issues can be almost immediately resolved since the trustees of (or participants in) the Qualified Plans can, on their own, redeem the shares out of the Insurance Product Funds.

33. Various factors have prevented more insurance companies from offering variable annuity and variable life insurance contracts than currently do so. These factors include the costs of organizing and operating a funding medium, the lack of expertise with respect to investment management (principally with respect to stock and money market investments) and the lack of public name recognition as investment professionals. In particular, some smaller life insurance companies may not find it economically feasible, or within their investment or administrative expertise, to enter the variable contract business on their own. Use of the Insurance Products Funds as common investment media for Variable Contracts would ameliorate these concerns. Participating Insurance Companies would benefit not only from the investment advisory and administrative expertise of Mitchell Hutchins and its affiliates, but also from the cost efficiencies and investment flexibility afforded by a large pool of funds. Therefore, making the Insurance Products Funds available for mixed and shared funding will encourage more insurance companies to offer Variable Contracts. This should result in increased competition with respect to both Variable Contract design and pricing, which can be expected to result in more product variation and lower charges. Mixed and shared funding should also benefit Variable Contracts by eliminating a significant portion of the costs of establishing and administering separate funds.

34. Moreover, sale of the shares of Insurance Products Funds to Qualified Plans should further increase the amount of assets available for investment by such funds. This, in turn, should benefit Variable Contract owners by promoting economies of scale, by permitting greater safety through greater diversification, and by making the addition of new portfolios to an Insurance Product Fund more feasible.

**Applicants' Conditions**

To the extent required by the Commission, Applicants consent to the following conditions:

1. A majority of the board of trustees or board directors (each a ''Board'') of each Insurance Products Fund will consist of persons who are not ''interested persons'' thereof, as defined by Section 2(a)(19) of the 1940 Act and the rules thereunder, and as modified by any applicable orders of the Commission, except that if this condition is not met by reason of the death, disqualification, or bona fide resignation of any trustee or director, then the operation of this condition shall be suspended: (a) for a period of 45 days if the vacancy or vacancies may be filled by the Board; (b) for a period of 60 days if a vote of shareholders is required to fill the vacancy or vacancies; or (c) for such longer period as the Commission may prescribe by order upon application.

2. Each Board will monitor its respective Insurance Products Fund for the existence of any material irreconcilable conflict between the interests of the contract owners of all Participating Separate Accounts and the interests of Qualified Plan participants investing in the Insurance Products Fund and determine what action, if any, should be taken in response to such conflicts. A material irreconcilable conflict may arise for a variety of reasons, including: (a) an action by any state insurance regulatory authority; (b) a change in applicable federal or state insurance, tax, or securities laws or regulations, or a public ruling, private letter ruling, no-action or interpretive letter, or any similar action by insurance, tax, or securities regulatory authorities; (c) an administrative or judicial decision in any relevant proceeding; (d) the manner in which the investments of the Insurance Products Fund are being managed; (e) a difference in voting instructions given by variable annuity contract owners and variable life insurance contract owners and trustees of the Qualified Plans; (f) a decision by a Participating Insurance Company to disregard the voting instructions of contract owners; or (g) if applicable, a decision by a Plan to disregard the voting instructions of its participants.

3. Participating Insurance Companies, Mitchell Hutchins (or any other investment adviser of an Insurance Products Fund), and Qualified Plans that execute a participating agreement upon becoming an owner of 10% or more of an Insurance Product Fund's assets (collectively, ''Participants'') will report any potential or existing conflicts to the Board of any relevant Insurance Products Fund. Participants will be responsible for assisting the appropriate Board in carrying out its responsibilities under these conditions by providing the Board with all information reasonably necessary for the Board to consider any issues raised. This responsibility includes, but is not limited to, an obligation of each Participating Insurance Company to inform the Board whenever it has determined to disregard voting instructions from contract owners and, when pass-through voting is applicable, an obligation of each Plan to inform the Board whenever it has determined to disregard voting instructions from Plan participants. The responsibilities to report such information and conflicts and to assist the Boards will be contractual obligations of all Participants under their agreements governing participation in the Insurance Products Funds and these agreements shall provide, in the case of Participating Insurance Companies, that these responsibilities will be carried out with a view only to the interests of contract owners, and, in the case of Qualified Plans, that these responsibilities will be carried out with a view only to the interest of Plan participants.

4. If a majority of the Board of an Insurance Products Fund, or a majority of its disinterested members, determines that a material irreconcilable conflict exists, the relevant Participants will, at their expense and to the extent reasonably practicable (as determined by a majority of the disinterested board members), take whatever steps are necessary to remedy or eliminate the irreconcilable material conflict, including: (a) withdrawing the assets allocable to some or all of the Participating Separate Accounts or Plans from the Insurance Products Fund or any series thereof and reinvesting such assets in a different investment medium, which may include another series of an Insurance Products Fund or another Insurance Products Fund, or submitting the question of whether such reinvestment should be implemented to

a vote of all affected contract owners and Plan participants and, as appropriate, reinvesting the assets of any appropriate group (*i.e.*, variable annuity contract owners or variable life insurance contract owners of one or more Participating Insurance Companies or Plan participants) that votes in favor of such reinvestment, or offering to the affected contract owners and Plan participants the option of making such a change; and (b) establishing a new registered management investment company or managed separate account. If a material irreconcilable conflict arises because of a Participant's decision to disregard voting instructions of contract owners or Plan participants and that decision represents a minority position or would preclude a majority vote, the Participant may be required, at the election of the Insurance Products Fund, to withdraw its investment in such Fund, and no charge or penalty will be imposed as a result of such withdrawal. To the extent permitted by applicable law, the responsibility to take remedial action in the event of a Board determination of material irreconcilable conflict and to bear the cost of such remedial action will be a contractual obligation of all Participants under their agreements governing participation in the Insurance Products Fund, and these responsibilities will be carried out with a view only to the interests of contract owners and Plan participants.

5. For purposes of Condition 4, a majority of the disinterested members of the applicable Board will determine whether or not any proposed action adequately remedies any material irreconcilable conflict, but in no event will the Insurance Products Fund or Mitchell Hutchins or an affiliate be required to establish a new funding medium for any Participant. No Participting Insurance Company or Qualified Plan shall be required to establish a new funding medium for any Variable Contract or Plan if: (a) an offer to do so has been declined by vote of a majority of the contract owners or Plan participants materially and adversely affected by the material irreconcilable conflict; or (b) pursuant to governing Plan or Variable Contract documents and applicable law, the Plan or Participating Insurance Company makes such decision without a vote of the Plan participants or Variable Contract owners.

6. Any Board's determination of the existence of a material irreconcilable conflict and its implications will be made known promptly and in writing to all Participants.

7. Participating Insurance Companies will provide pass-through voting privileges to contract owners who invest in Participating Separate Accounts so long as the Commission interprets the 1940 Act to require pass-through voting for contract owners. Accordingly, the Participating Insurance Companies will vote shares of an Insurance Products Fund held in their Participating Separate Accounts in a manner consistent with voting instructions timely received from contract owners. Participating Insurance Companies will be responsible for assuring that each of their Participating Separate Accounts investing in an Insurance Products Fund calculates voting privileges in a manner consistent with all other Participating Insurance Companies. The obligation to calculate voting privilege in this manner will be a contractual obligation of all Participating Insurance Companies under the agreements governing participation in the Insurance Products Fund. Each Participating Insurance Company will vote shares for which it has not received timely voting instructions, as well as shares attributable to it, in the same proportion as it votes shares for which it has received instructions.

8. Each Qualified Plan will vote as required by applicable law and governing Plan documents.

9. All reports of potential or existing conflicts by a Board, and all Board action with regard to determining the existence of a conflict, notifying Participants of a conflict, and determining whether any proposed action adequately remedies a conflict, will be properly recorded in the minutes of the appropriate Board or other appropriate records, and such minutes or other records shall be made available to the Commission upon request.

10. Each Insurance Products Fund will notify all Participants that disclosure in separate account prospectuses or Plan prospectuses or other Plan disclosure documents regarding potential risks of mixed and shared funding may be appropriate. Each Insurance Products Fund will disclose in its prospectus that: (a) the Insurance Product Fund is intended to be a funding vehicle for variable annuity and variable life insurance contracts offered by various insurance companies and for Plans; (b) due to differences of tax treatment and other considerations, the interests of various contract owners participating in an Insurance Products Fund and the interests of Qualified Plans investing in that Insurance Product Fund may conflict; and (c) the Board of that Insurance Product Fund will monitor for the existence of any material conflicts and determine what action, if any, should be taken.

11. Each Insurance Products Fund will comply with all provisions of the 1940 Act requiring voting by shareholders (which, for these purposes, shall be the persons having a voting interest in shares of the Insurance Products Fund), and, in particular, each Insurance Product Fund will either provide for annual meetings (except to the extent that the Commission may interpret Section 16 of the 1940 Act not to require such meetings) or comply with Section 16(a), and, if applicable, Section 16(b) of the 1940 Act. Further, each Insurance Products Fund will act in accordance with the Commission's interpretation of the requirements of Section 16(a) with respect to periodic elections of directors or trustees and with whatever rules the Commission may promulgate with respect thereto.

12. If, and to the extent that, Rule 6e–2 and 6e–3(T) are amended (or if Rule 6e–3 under the 1940 Act is adopted) to provide exemptive relief from any provision of the 1940 Act or the rules thereunder with respect to mixed or shared funding on terms and conditions materially different from any exemptions granted in the Order requested by Applicants, then the Insurance Products Funds and the Participants, as appropriate, shall take such steps as may be necessary to comply with Rules 6e–2 and 6e–3(T), as amended, and Rule 6e–3, as adopted, to the extent applicable.

13. No less than annually, the Participants shall submit to the Boards of the Insurance Products Funds such reports, materials, or data as such Boards may reasonably request so that the Boards may carry out fully the obligations imposed upon them by the conditions contained in the Application. Such reports, materials, and data shall be submitted more frequently if deemed appropriate by the applicable Boards. The obligations of the Participating Insurance Companies and Qualified Plans to provide these reports, materials, and data to the Boards shall be a contractual obligation under the agreements governing their participation in the Insurance Products Funds.

14. In the event that a Plan should ever become an owner of 10% or more of the assets of an Insurance Products Fund, such Plan will execute a fund participation agreement including the conditions set forth herein, to the extent applicable, with that Insurance Product Fund. A Plan will execute an application containing an acknowledgment of this condition at the time of its initial purchase of shares of the Insurance Products Fund.

## Conclusion

For the reasons summarized above, Applicants believe that the requested exemptions, in accordance with the standards of Section 6(c) of the 1940 Act, are appropriate in the public interest and consistent with the protection of investors and the purposes fairly intended by the policy and provisions of the 1940 Act.

For the Commission, by the Division of Investment Management, pursuant to delegated authority.

**Margaret H. McFarland,**

*Deputy Secretary.*

[FR Doc. 99–22550 Filed 8–31–99 8:45 am]

BILLING CODE 8010–01–M

---

## SECURITIES AND EXCHANGE COMMISSION

**[Rel. No. IC–23968; No. 812–11556]**

## The Union Central Life Insurance Company, et al.; Notice of Application

August 24, 1999.

**AGENCY:** Securities and Exchange Commission (''Commission'').

**ACTION:** Notice of application for an order pursuant to Section 26(b) of the Investment Company Act of 1940 (the ''Act'').

### Summary of Application

Applicants seek an order approving the substitution of: (a) Shares of the Balanced Index Portfolio of Carillon Fund (''Balanced Index Portfolio'') for shares of the Capital Portfolio of Carillon Fund (''Capital Portfolio''); and (b) shares of the AIM V.I. Capital Appreciation Fund of the AIM Fund (''AIM Portfolio'') for shares of the American Century VP Capital Appreciation Portfolio of American Century Fund (''American Century Portfolio'').

### Applicants

The Union Central Life Insurance Company (''Union Central''), Carillon Account and Carillon Life Account.

### Filing Date

The application was filed on March 31, 1999, and amended and restated on July 23, 1999. Applicants represent that they will file a second amended and restated application during the notice period to conform to the representations set forth herein.

### Hearing or Notification of Hearing

An order granting the application will be issued unless the Commission orders a hearing. Interested persons may request a hearing by writing to the Secretary of the Commission and serving Applicants with a copy of the request, personally or by mail. Hearing requests should be received by the Commission no later than 5:30 p.m. on September 20, 1999, and should be accompanied by proof of service on Applicants, in the form of an affidavit or, for lawyers, a certificate of service. Hearing requests should state the nature of the writer's interest, the reason for the request, and the issues contested. Persons who wish to be notified of a hearing may request notification by writing to the Secretary of the Commission.

**ADDRESSES:** Secretary, Securities and Exchange Commission, 450 Fifth Street, NW, Washington, DC 20549–0609. Applicants, c/o Union Central Life Insurance Company, 1876 Waycross Road, P.O. Box 40888, Cincinnati, Ohio 45240.

**FOR FURTHER INFORMATION CONTACT:** Paul G. Cellupica, Senior Counsel, or Kevin M. Kirchoff, Branch Chief, Office of Insurance Products, Division of Investment Management, at (202) 942–0670.

**SUPPLEMENTARY INFORMATION:** The following is a summary of the application. The complete application is available for a fee from the Public Reference Branch of the Commission, 450 Fifth Street, NW, Washington, DC 20549–0102 (tel. (202) 942–8090).

### Applicants' Representations

1. Union Central is a mutual insurance company organized in 1867 under the laws of Ohio. Union Central is primarily engaged in the sale of life and disability insurance and annuities and is currently licensed to operate in all states and the District of Columbia.

2. Carillon Account is a separate account of Union Central that is registered with the Commission as a unit investment trust. Carillon Account is used in connection with Union Central's variable annuity contracts (the ''VA Contracts''). Carillon Life Account is a separate account of Union Central that is registered with the Commission as a unit investment trust. Carillon Life Account is used in connection with Union Central's variable life insurance policies (the ''VUL Contracts,'' collectively with the VA Contracts, the ''Contracts'').

3. The VA Contracts are individual flexible premium, combination fixed and variable annuity contracts. The VA Contracts' variable investment options consist of 12 portfolios. Prior to annunitization, contract owners may transfer accumulation values among the subaccounts or from Carillon Account to Union Central's general account as frequently as they want. The first six transfers in a contract year may be made without charge. A charge (currently $10) is imposed for each transaction in excess of six in a contract year.

4. The VUL Contracts are individual, combination fixed and variable universal life insurance contracts. Contractowners may transfer accumulation values among the subaccounts or from Carillon Life Account to Union Central's general account as frequently as they want. The first twelve transfers in a contract year may be made without charge. A charge (currently $10) is imposed for each transaction in excess of twelve in a contract year.

5. The Contracts permit Union Central (subject to any applicable law) to make additions to, deletions from, or substitutions for, the portfolio shares purchased by any subaccount. Substitutions are specifically permitted if the shares of a portfolio are no longer available for investment, or if in Union Central's judgment, investment in any portfolio would be inappropriate. To the extent required by applicable law, substitutions of shares attributable to a subaccount will not be made unless affected contractowners have been notified of the change and until the Commission has approved the change. In the case of such a substitution, VA Contract owners have the right, within 30 days after notification, to surrender their VA Contract without the imposition of any surrender charge.

6. Applicants proposed the following substitutions: (a) the substitution of shares of the Balanced Index Portfolio for shares of the Capital Portfolio, and (b) the substitution of shares of the AIM Portfolio for shares of the American Century Portfolio.

7. The Capital Portfolio is currently an investment option under each of the Contracts. The Capital Portfolio is managed by Carillon Advisers, Inc. Its investment objective is to provide the highest total return through a combination of income and capital appreciation consistent with the reasonable risks associated with an investment portfolio of above-average quality to investing in equity securities, debt instruments and money market instruments.

8. The expense ratio of the Capital Portfolio for 1998 was 0.79%. The total return of the Capital Portfolio (exclusive of Contract or subaccount charges) was −13.25% and 4.30% respectively for the one-year and five-year periods ending December 31, 1998, and 7.60% for the period from its inception on May 2, 1990 to December 31, 1998.

9. On or shortly after the date of the proposed substitutions, Union Central will eliminate the subaccounts that invest in the Capital Portfolio. Union Central has decided to eliminate this portfolio as an investment option under the Contracts because of its investment performance.

10. The American Century Portfolio (collectively with the Capital Portfolio, the ''Eliminated Portfolios'') is another investment option currently available under the Contracts. The investment adviser of the American Century Portfolio is American Century Investment Management, Inc. Its investment objective is to seek capital growth. It seeks to achieve its investment objective by investing primarily in common stocks that are considered by its investment adviser to have better than average prospects for appreciation.

11. The expense ratio of the American Century Portfolio for 1998 was 1.00%. The total return of the American Century Portfolio (exclusive of Contract or subaccount charges) was −2.16%, 3.25% and 8.70% respectively for the one-year, five-year, and ten-year periods ending on December 31, 1998.

12. On or shortly after the date of the proposed substitutions, Union Central will eliminate the subaccounts that invest in the American Century Portfolio. The reason for eliminating this portfolio as an investment option under the Contracts is its investment performance.

13. The Balanced Index Portfolio became an investment option under the VA Contracts on or about May 3, 1999 and will become an investment option under the VUL Contracts shortly before the date of the substitutions. The Balanced Index Portfolio is managed by Carillon Advisers, Inc. Its investment objectives is to seek investment results, with respect to 60% of its assets, that correspond to the total return performance of U.S. common stocks, as represented by the S&P 500 Index and, with respect to 40% of its assets, that correspond to the total return performance of investment grade bonds, as represented by the Lehman Brothers Aggregate Bond Index (the ''Lehman Index'').

14. The Balanced Index Portfolio is a new portfolio that has had no meaningful historical expense ratio or investment performance data. Its expense ratio is estimated at 0.60%. Because management of the Balanced Index Portfolio involves almost no discretionary investments, it is possible to estimate pro forma performance based on the performance of the benchmark indices and estimated portfolio expenses. While there can, of course, be no guarantee that the two segments of the Balanced Index Portfolio could have tracked their respective benchmarks exactly, or that expenses would have been precisely as estimated, these estimates should provide a useful ''order of magnitude'' with which to compare the performance of the Capital Portfolio that is to be eliminated. The estimated pro forma performance of the Balanced Index Portfolio (40% of the portfolio's assets assumed to have the total return of the Lehman Index, minus estimated portfolio expenses, and 60% of the portfolio's assets assumed to have the total return of the S&P 500 Index, minus portfolio expenses) would be 20.38%. 16.73% and 14.71% for the one-year, five-year and ten-year periods ending December 31, 1998.

15. The AIM Portfolio (collectively with the Balanced Index Portfolio, the ''Substitute Portfolios'') became an investment option under the VA Contracts on or about May 3, 1999 and will become an investment option under the VA Contracts shortly before the date of the substitutions. The AIM Portfolio is managed by AIM Advisors, Inc. Its investment objective is to seek capital appreciation through investments in common stocks, with emphasis on medium-sized and smaller emerging growth companies.

16. The expense ratio of the AIM Portfolio for 1998 was 0.67%. The total return of the AIM Portfolio (exclusive of Contract or subaccount charges) was 19.30% and 17.23% respectively for the one-year and five-year periods ending on December 31, 1998 and 18.77% for the period from its exception on May 5, 1993 to December 31, 1998.

17. Applicants represent that each substitution will take place at the relative share values determined on the date of the substitution in accordance with Section 22 of the Act and Rule 22c–1 thereunder. Accordingly, there will be no financial impact to any contractowner. The substitutions will be effective by: (a) redeeming the shares of the Capital Portfolio held in the subaccounts that invest in that portfolio and substituting for them shares of the Balanced Index Portfolio; and (b) redeeming the shares of the American Century Portfolio held in the subaccounts that invest in that portfolio and substituting for them shares of the AIM Portfolio.

18. Immediately following the substitutions, Union Central will: (a) combine the Capital and Balanced Index Subaccounts that each hold shares of the Balanced Index Portfolio after the substitution; and (b) combine the American Century and AIM Subaccounts that each hold shares of the AIM Portfolio after the substitution. Union Central will reflect this treatment in disclosure documents for the Carillon Account and Carillon Life Account and in the financial statements and Form N–SAR annual reports filed by the Carillon Account and Carillon Life Account.

19. Applicants represent that the proposed substitutions have been described in supplements to the prospectuses for the Contracts (''Stickers'') that were filed with the Commission and mailed to contractowners. Since that filing, a Sticker has been affixed to each prospectus for the Contracts. The Stickers gave contractowners notice of the substitutions and described the reasons for engaging in the substitutions. The Stickers also informed existing contractowners that no additional amounts may be allocated to the subaccounts that invest in the Eliminated Portfolios on or after the date of substitution. In addition, the Stickers informed affected contractowners that they will have an opportunity to reallocate accumulation value:

(a) Prior to the substitutions, from the subaccounts investing in the Eliminated Portfolios; or

(b) For 30 days after the substitutions, from the subaccounts investing in the Substitute Portfolios, to subaccounts investing in other portfolios available under the Contracts,

without the imposition of any transfer charge. Any such transfer will not count against the number of free transfers permitted under that Contract.

20. Applicants represent that within five days after the substitutions, Union Central will send to affected contractowners written confirmation that the substitutions have occurred. At least 30 days prior to the substitutions, a notice of the substitutions will be sent to all affected contractowners and any affected contractowner who has not already received a fund prospectus that includes a description of the Substitute Portfolios will be mailed such a prospectus with that notice.

21. Applicants represent that Union Central will pay all fees and expenses of the substitutions, including legal, accounting brokerage commissions and other fees and expenses; none will be borne by contractowners. Affected contractowners will not incur any fees or charges as a result of the substitutions, nor will their rights or the obligations of Union Central under the Contracts be altered in any way. The substitutions will not cause the fees and

charges under the Contracts currently being paid by contractowners to be greater after the substitutions than before the substitutions. The substitutions will have no adverse tax consequences to contractowners and will in no way alter the tax benefits to contractowners.

22. Applicants believe that their request satisfies the standards for relief of Section 26(b) because:

(a) Each substitution involves portfolios with similar investment objectives;

(b) after each substitution, affected contractowners will be invested in a Substitute Portfolio whose actual performance, or pro-forma performance, has been better on a historical basis than that of the Eliminated Portfolio; and

(c) after each substitution affected contractowners will be invested in a Substitute Portfolio whose expenses have been less, or are expected to be less on an estimated basis, than those of the Eliminated Portfolio.

## Applicants' Legal Analysis

1. Applicants request an order pursuant to Section 26(b) of the Act approving the substitutions. Section 26(b) of the Act makes it unlawful for any depositor or trustee of a registered unit investment trust holding the security of a single issuer to substitute another security for such security unless the Commission approves the substitution. The Commission will approve such a substitution if the evidence establishes that it is consistent with the protection of investors and the purposes fairly intended by the policy and provisions of the Act.

2. Applicants assert that the purposes, terms and conditions of the substitutions are consistent with the principles and purposes of Section 26(b) and do not entail any of the abuses that Section 26(b) is designed to prevent. Substitution is an appropriate solution to the unfavorable relative performance and higher relative expenses of the portfolio to be eliminated. Applicants believe that each Substitute Portfolio will better serve constractowner interests because its performance has been significantly better than the performance of, and its expenses have been lower than the expenses of, the corresponding Eliminated Portfolio. Moreover, Union Central has reserved this right in each of the Contracts and disclosed this reserved right in the prospectus for each Contract.

3. Applicants represent that the substitutions will not result in the type of costly forced redemption that Section 26(b) was intended to guard against and, for the following reasons, are consistent with the protection of investors and the purposes fairly intended by the Act:

(a) Each Substitute portfolio has investment objectives that are similar to those of the corresponding Eliminated Portfolio, and permits contractowners continuity of their investment objectives and expectations.

(b) The costs of the substitutions will be borne by Union Central and will not be borne by contractowners. No charges will be assessed to effect the substitutions.

(c) The substitutions will, in all cases, be at net asset values of the respective portfolio shares, without the imposition of any transfer or similar charge and with no change in the amount of any contractowner's accumulation value.

(d) The substitutions will not cause the fees and charges under the Contracts currently being paid by contractowners to be greater after the substitutions than before the substitutions.

(e) The contractowners will be given notice prior to the substitutions and will have an opportunity to reallocate accumulation value among other available subaccounts without the imposition of any transfer charge or limitation. No transfer:

(i) from a subaccount investing in an Eliminated Portfolio from the date of the notice through the date of the substitutions, or

(ii) for 30 days after the substitutions, of accumulation value that had been transferred to a subaccount that invests in a Substitute Portfolio as a result of the substitutions, will count as one of the limited number of transfers permitted in a contract year free of charge.

(f) Within five days after the substitutions, Union Central will send to affected contractowners written confirmation that the substitutions have occurred.

(g) The substitutions will in no way alter the insurance benefits to contractowners or the contractual obligations of Union Central.

(h) The substitutions will have no adverse tax consequences to contractowners and will in no way alter the tax benefits to contractowners.

## Conclusion

Applicants assert that, for the reasons summarized above, the requested order approving the substitutions should be granted.

For the Commission, by the Division of Investment Management pursuant to delegated authority.

**Margaret H. McFarland,**

*Deputy Secretary.*

[FR Doc. 99–22551 Filed 8–30–99; 8:45 am]

BILLING CODE 8010–01–M

# SECURITIES AND EXCHANGE COMMISSION

**[Rel. No. IC–23967; File No. 812–11552]**

## Target/United Funds, Inc., et al.

August 24, 1999.

**AGENCY:** Securities and Exchange Commission (''SEC'' or ''Commission'').

**ACTION:** Notice of Application for an order pursuant to Section 6(c) of the Investment Company Act of 1940 (''1940 Act'') granting exemptive relief from Sections 9(a), 13(a), 15(a) and 15(b) of the 1940 Act and Rules 6e–2(b)(15) and 6e–3(T)(b)(15) thereunder.

## Summary of Application

Applicants seek an order to permit shares of Target/United Funds, Inc. (''Fund'') and any other similar investment company or investment company series that Waddell & Reed Investment Management Company (''WRIMCO'') or any of its affiliates serve, now or in the future, as investment adviser, administrator, manager, principal underwriter or sponsor (the Fund and such other investment companies and series thereof, the ''Insurance Products Funds''), to be offered and sold to and held by: (1) Separate accounts funding variable annunity and variable life insurance contracts issued by both affiliated and unaffiliated life insurance companies; and (2) qualified pension and retirement plans outside of the separate account context.

## Applicants

Target/United Funds, Inc. and Waddell & Reed Investment Management Company.

## Filing Date

The application was filed on March 30, 1999, and amended and restated on July 16, 1999.

## Hearing or Notification of Hearing

An order granting the application will be issued unless the SEC orders a hearing. Interested persons may request a hearing by writing to the SEC's Secretary and serving applicants with a copy of the request, personally or by mail. Hearing requests should be received by the Commission by 5:30 p.m. on September 17, 1999, and should be accompanied by proof of service on applicants, in the form of an affidavit or, for lawyers, a certificate of service. Hearing requests should state the nature of the writer's interest, the reason for the request, and the issues contested. Persons who wish to be notified of a

hearing may request notification by writing to the SEC's Secretary.

**ADDRESSES:** Secretary, SEC, 450 Fifth Street, NW, Washington, DC 20549–0609. Applicants, c/o Helge K. Lee, Esq., Senior Vice President, Secretary and General Counsel, Waddell & Reed, Inc., 6300 Lamar Avenue, Overland Park, Kansas 66202.

**FOR FURTHER INFORMATION CONTACT:** Keith E. Carpenter, Senior Counsel, or Kevin M. Kirchoff, Branch Chief, Office of Insurance Products, Division of Investment Management, at (202) 942–0670.

**SUPPLEMENTARY INFORMATION:** The following is a summary of the application. The complete application may be obtained for a fee from the SEC's Public Reference Branch, 450 Fifth Street, NW, Washington, DC 20549 ((202) 942–8090).

## Applicant's Representations

1. The Fund is an open-end management investment company organized as a corporation under the laws of the State of Maryland. The Fund currently consists of eleven separately managed series, each of which has its own investment objective and policies. Additional series could be added to the Fund in the future.

2. WRIMCO is registered as an investment adviser under the Investment Advisers Act of 1940, and serves as the investment manager and accounting services agent for each of the Fund's series.

3. The Fund currently offers its shares exclusively to insurance company separate accounts that fund variable insurance products. The Fund's shares are offered only to the separate accounts of United Investors Life Insurance Company (''United Investors''). United Investors receives no payments from the Fund for services in connection with the distribution of the shares. Applicants propose that shares of each Insurance Products Fund be offered to United Investors and/or one or more other insurance companies, whether affiliated or unaffiliated, for their separate accounts as an investment vehicle to fund various insurance products including, among others, variable annuity contracts, variable group life insurance contracts, scheduled premium variable life insurance contracts, single premium and modified single premium variable life insurance contracts, and flexible premium variable life insurance contracts (''Variable Contracts''). Some of these separate accounts may not be registered as investment companies under the 1940 Act pursuant to the exceptions from registration in Sections 3(c)(1), 3(c)(7) or 3(c)(11) of the 1940 Act. In addition, Applicants propose that shares of each Insurance Products Fund be eligible to be offered directly to qualified pension and retirement plans (''Qualified Plans'' or ''Plans'') outside of the separate account context. Separate accounts owning shares of the Insurance Products Funds and their insurance company depositors are referred to herein as ''Participating Separate Accounts'' and ''Participating Insurance Companies,'' respectively.

4. Participating Insurance Companies establish their own Participating Separate Accounts and design their own Variable Contracts. Each such Variable Contract has or will have certain unique features and probably will differ from other Variable Contracts supported by the Insurance Products Funds with respect to insurance guarantees, premium structure, charges, options, distribution method, marketing techniques, sales literature, and other aspects. Each Participating Insurance Company, on behalf of its Participating Separate Account(s), will enter into a fund participation agreement with each Insurance Products Fund in which such Participating Separate Account invests, and will have the legal obligation of satisfying all applicable requirements under state and federal law. The role of the Insurance Products Funds, so far as the federal securities laws are applicable, will be limited to that of offering their shares to separate accounts of various insurance companies and fulfilling any conditions the Commission may impose upon granting the order requested herein.

5. The Plans will be pension or retirement plans intended to qualify under sections 401(a) and 501(c) of the Internet Revenue Code of 1986, as amended (''Code''). A plan may include a cash or deferred arrangement (permitting salary reduction contributions) intended to qualify under Section 401(k) of the Code. The Plans will also be subject to, and will be designed to comply with, the provisions of the Employee Retirement Income Security Act of 1974, as amended (''ERISA''), applicable to pension benefit plans, specifically ''Title I—Protection of Employee Benefit Rights.'' The Plans, therefore, will be subject requirements under the Code and ERISA regarding, for example, reporting and disclosure, participation and vesting, funding, fiduciary responsibility, and enforcement.

6. The Qualified Plans may choose any of the Insurance Products Funds as their sole investments or as one of several investments. Plan participants may or may not be given an investment choice depending on the Plan itself. Shares of any of the Insurance Products Funds sold to Qualified Plans would be held by the trustees of those Plans as mandated by Section 403(a) of ERISA. WRIMCO (or any other investment adviser to an Insurance Products Fund) may, to the extent permitted by law, act as investment adviser to any of the Qualified Plans that purchase shares of any of the Insurance Products Funds. Applicants state that there likely will be no pass-through voting to the participants in such Qualified Plans as it is not required to be provided to such participants pursuant to ERISA.

## Applicants' Legal Analysis

1. In connection with the funding of scheduled premium variable life insurance contracts issued through a separate account registered under the 1940 Act as a unit investment trust (''UIT''), Rule 6e–2(b)(15) provides partial exemptions from Sections 9(a), 13(a), 15(a) and 15(b) of the 1940 Act. The exemptions granted by Rule 6e–2(b)(15) are available only where all of the assets of the separate account consist of the shares of one or more registered management investment companies which offer their shares ''*exclusively* to variable life insurance separate accounts of the life insurer, or of any affiliated life insurance company'' (emphasis added). Therefore, the relief granted by Rule 6e–2(b)(15) is not available with respect to a scheduled premium variable life insurance separate account that owns shares of an investment company that also offers its shares to a variable annuity separate account or a flexible premium variable life insurance account of the same company or of any affiliated or unaffiliated insurance company. The use of a common management investment company as the underlying investment medium for both variable annuity and variable life insurance separate accounts is referred to as ''mixed funding.''

2. The relief granted by Rule 6e-2(b)(15) also is not available if the scheduled premium variable life insurance separate account owns shares of an underlying investment company that also offers its shares to separate accounts funding Variable Contracts of one or more unaffiliated life insurance companies. The use of a common investment company as the underlying investment medium for separate accounts of unaffiliated insurance companies is referred to herein as ''shared funding.''

3. Applicants assert that the relief granted by rule 6e–2(b)(15) does not

relate to Qualified Plans, or to a registered investment company's ability to sell its shares to these entities. However, because the relief under rule 6e–2(b)(15) is available only where shares are offered exclusively to separate accounts, additional exemptive relief is necessary if the shares of the Insurance Products Funds are also to be sold to Plans. The use of a common investment company as the underlying investment medium for variable annuity and variable life insurance separate accounts of affiliated and unaffiliated insurance companies and Qualified Plans is referred to as ''extended mixed and shared funding.''

4. In connection with flexible premium variable life insurance contracts issued through a separate account registered under the 1940 Act as a UIT, Rule 6e–3(T)(b)(15) provides partial exemptions from Sections 9(a), 13(a), 15(a) and 15(b) of the 1940 Act. The exemptions granted by rule 6e3(T) are available only where all of the assets of the separate account consist of the shares of one or more registered management investment companies which offer their shares ''*exclusively* to separate accounts of the life insurer, or of any affiliated life insurance company, offering either scheduled contracts or flexible contracts, or both; or which also offer their shares to variable annuity separate accounts of the life insurer or of an affiliated life insurance company.'' (emphasis added). Therefore, Rule 6e–3(T)(b)(15) permits mixed funding for flexible premium variable life insurance separate accounts but does not permit shared funding, because the relief granted by Rule 6e–3(T)(b)(15) is not available with respect to a flexible premium variable life insurance separate account that owns shares of an investment company that also offers its shares to separate accounts (including flexible premium variable life insurance separate accounts) of unaffiliated life insurance companies.

5. Applicants assert that if shares of the Insurance Products Funds were sold only to Qualified Plans, exemptive relief under rule 6e–3(T) would not be necessary. Applicants, however, state that because the relief under rule 6e–3(T) is available only if shares are offered exclusively to separate accounts, additional exemptive relief is necessary if the shares of the Insurance Products Funds are also to be sold to Plans.

6. Applicants state that Section 817(h) of the Code imposes certain diversification standards on the assets underlying the Variable Contracts held by the portfolios of the Insurance Production Funds. The Code provides that Variable Contracts will not be treated as annuity contracts or life insurance contracts for any period (and any subsequent period) for which the investments are not adequately diversified in accordance with regulations issued by the Treasury Department. Applicants also state that on March 2, 1989, the Treasury Department issued Regulations (Treas. Reg § 1.817–5) which established diversification requirements for the investment portfolios underlying Variable Contracts. The Regulations generally provide that, in order to meet the diversification requirements, all of the beneficial interests in the underlying investment company must be held by the segregated asset accounts of one or more insurance companies. However, the Regulations also contain certain exceptions to this requirement, one of which allows trustees of Qualified Plans to hold shares of an investment company without adversely affecting the status of the investment company as an adequately diversified underlying investment for Variable Contracts issued through separate accounts of insurance companies (Treas. Reg. § 1.817–5(f)(3)(iii)). As a result of this exception to the general diversification requirements, Applicants assert that Qualified Plans may select the Insurance Products Funds as investment options without endangering the tax status of Variable Contracts issued through Participating Insurance Companies.

7. Applicants state that the promulgation of rules 6e–2(b)(15) and 6e–3(T)(b)(15) preceded the issuance of the treasury Regulations which made it possible for shares of an investment company to be held by the trustees of Qualified Plans without adversely affecting the ability of separate accounts of insurance companies to hold shares of the same investment company in connection with their variable annuity and variable life contracts. Thus, Applicants assert that the sale of shares of the same investment company to separate accounts and Qualified Plans could not have been envisioned at the time of the adoption of Rules 6e–2(b)(15) and 6e-3(T)(b)(15).

8. Accordingly, Applicants request that the Commission issue an order pursuant to Section 6(c) of the 1940 Act exempting scheduled and flexible premium variable life insurance separate accounts (and, to the extent necessary, any investment adviser, sub-adviser, principal underwriter and depositor of such an account) from Sections 9(a), 13(a), 15(a) and 15(b) of the 1940 Act, and subparagraph (b)(15) of rules 6e2 and 6e3(T) (and any comparable permanent rule) thereunder, to the extent necessary to permit shares of the Insurance Products Funds to be offered and sold in connection with extended mixed and shared funding.

9. In general, Section 9(a) of the 1940 Act disqualifies any person convicted of certain offenses, and any company affiliated with that person from acting or serving in various capacities with respect to a registered investment company. More specifically, Section 9(a)(3) provides that it is unlawful for any company to serve as a investment adviser to, or principal underwriter for, any registered open-end investment company if an affiliated person of that company is subject to a disqualification enumerated in Sections 9(a)(1) or (2).

10. Rules 6e2(b)(15)(i) and (ii) and 6e–3(T)(b)(15)(i) and (ii) however, provide partial exemptions from Section 9(a) under certain circumstances, subject to the limitations discussed above on mixed and shared funding. These exemptions limit the application of the eligibility restrictions to affiliated individuals or companies that directly participate in the management or administration of the underlying investment company or series thereof. The relief provided by the rules permits a person disqualified under Section 9(a)(1) or (2) to be an officer, director, or employee of an insurance company, or any of its affiliates that serves in any capacity with respect to any underlying investment company, so long as the disqualified individual does not participate directly in the management or administration of the underlying investment company.

11. Applicants state that the partial relief granted in Rules 6e–2 and 6e–3(T) from the requirements of Section 9 of the 1940 Act limits, in effect, the amount of monitoring necessary to ensure compliance with Section 9 to that which is appropriate in light of the policy and purposes of that section. Applicants state the exemptions contained in Rules 6e–29(b)(15) and 6e–3(T) recognize that it is not necessary for the protection of investors or the purposes fairly intended under the 1940 Act to apply Section 9(a) to the many individuals who may be involved in a large insurance company but would have no connection with the investment company, or any series thereof, funding the separate accounts. Applicants believe that is unnecessary to limit the applicability of the rules merely because shares of the Insurance Products funds may be sold in connection with mixed and shared funding. Applicants state that neither the Participating Insurance Companies nor the Qualified Plans are expected to play any role in the management or administration of the

Insurance Products Funds. Applicants assert that, therefore, applying the restrictions of Section 9(a) serves no regulatory purpose. Furthermore, Applicants assert that applying such restrictions would increase the monitoring costs incurred by the Participating Insurance Companies and, therefore, would reduce the net rates of return realized by Variable Contract owners. Applicants further assert that the relief requested will in no way be affected by the proposed sale of shares of the Insurance Products Funds to Qualified Plans, and that the insulation of the Insurance Products Funds from those individuals who are disqualified under the 1940 Act will remain intact even if shares of the Insurance Products Funds are sold to Qualified Plans. Applicants state that since the Qualified Plans are not investment companies and will not be deemed to be affiliated solely by virtue of their shareholdings, no additional relief is necessary.

12. Subgaragraph (b(15)(iii) of Rules 6e–2 and 6e–3(T) under the 1940 Act assumes that contract owners are entitled to pass-through voting privileges with respect to investment company shares held by a related separate account. However, subparagraph (b)(15)(iii) of Rules 6e–2 and 6e3(T) provides exemptions from the pass-through voting requirement in limited situations, if the limitations on mixed and shared funding are satisfied.

13. Subparagraph (b)(15)(iii) of Rules 6e–2 and 6e–3(T) provides that an insurance company may disregard the voting instructions of its contract owners with respect to the investments of an underlying investment company or any contract between and investment company and its adviser, when an insurance regulatory authority so requires. In addition, Rules 6e–2(b)(15)(iii)(B) and 6e–3(T)(b)(15)(iii)(A)(*2*) provide that the insurance company may disregard contract owners voting instructions with regard to certain changes initiated by the contract owners in the investment company's policies, principal underwriter, or investment adviser. Voting instructions with respect to a change in investment policies may be disregarded only if the insurance company makes a good-faith determination that such change would: (a) Violate state law; or (b) result in investments that either would not be consistent with the investment objectives of the separate account; or (c) result in investments that would vary from the general quality and nature of investments and investment and techniques used by other separate accounts of the company or of an affiliated life insurance company with similar investment objectives. Voting instructions with respect to a change in the principal underwriter may be disregarded if such disapproval is reasonable. Voting instructions with respect to a change in an investment adviser may be disregarded only if the insurance company makes a good-faith determination that: (a) The adviser's fees would exceed the maximum rate that may be charged against the separate account's assets; (b) the proposed adviser may be expected to employ investment techniques that vary from the general techniques used by the current adviser; or (c) the proposed adviser may be expected to manage the investment company's investments in a manner that would be inconsistent with its investment objectives or in a manner that would result in investments that vary from certain standards.

14. Applicants state that Rule 6e–2 recognizes that variable life insurance contracts have important elements unique to insurance contracts and are subjects to extensive state regulation. Applicants maintain that in adopting Rule 6e–2, the Commission recognized that state insurance regulators have authority, pursuant to state insurance laws or regulations, to disapprove or require changes in investment policies, investment advisers or principal underwriters. Applicants also state that the Commission expressly recognized that state insurance regulators have authority to require an insurance company to draw from its general account to cover costs imposed upon the insurance company by a change approved by contract owners over the insurance company's objections. Therefore, the Commission deemed exemptions from pass-through voting requirements necessary ''to assure the solvency of the life insurer and the performance of its contractual obligations by enabling an insurance regulatory authority of the insurer to act when certain proposals reasonably could be expected to increase the risks undertaken by the life insurer.'' Applicants assert that in this respect, flexible premium variable life insurance contracts and variable annuity contracts are subject to substantially the same state insurance regulatory authority and, therefore, the corresponding provisions of Rule 6e–3(T) for flexible premium insurance contracts presumably were adopted in recognition of the same factors.

15. Applicants assert that these considerations are no less important or necessary in connection with mixed and shared funding. Applicants state that mixed and shared funding does not compromise the goals of state insurance regulatory authorities or of the Commission. Indeed, Applicants assert that by permitting these arrangements, the Commission eliminates needless duplication of start-up and administrative expenses and potentially increases an investment company's assets, thereby making effective portfolio management strategies easier to implement and promoting other economies of scale. Applicants further state that the sale of Fund shares to Qualified Plans will not have any impact on the relief requested in this regard. Shares of the Insurance Products Funds sold to Qualified Plans will be held by the trustees of those Plans as required by Section 403(a) of ERISA. Section 403(a) also provides that the trustees must have exclusive authority and discretion to manage and control the plan investments with two exceptions: (a) When the plan expressly provides that the trustees are subject to the direction of a named fiduciary who is not a trustee, in which case the trustees are subject to proper directions made in accordance with the terms of the plan and not contrary to ERISA; and (b) when the authority to manage, acquire or dispose of assets of the plan is delegated to one or more investment managers pursuant to Section 402(c)(3) of ERISA. Unless one of the two exceptions stated in Section 403(a) applies, Plan trustees have the exclusive authority and responsibility for voting proxies. If a abed fiduciary appoints an investment manager, the investment manager has the responsibility to vote the shares held unless the right to vote such shares is reserved to the trustees or the named fiduciary. Accordingly, Applicant assert that, unlike the case with insurance company separate accounts, the issue of the resolution of material irreconcilable conflicts with respect to voting is not present with respect to Qualified Plans since such plans are not entitled to pass-though voting privileges.

16. Applicants submit that even if a Qualified Plan were to hold a controlling interest in an Insurance Products Fund, Applicants do not believe that such control would disadvantage other investors in that Insurance Products Fund to any greater extent than is the case when any institutional shareholder holds a controlling interest in the voting securities of any open-end management investment company. In this regard, Applicants submit that investment in an Insurance Products Fund by a Qualified Plan will not create any of the voting complications occasioned by mixed or

shared funding. Unlike mixed or shared funding, Plan investor voting rights cannot be frustrated by veto rights of insurers or state regulators.

17. Applicants generally expect many Qualified Plans to have their trustees or other fiduciaries exercise voting rights attributable to investment securities held by the Qualified Plan in their discretion. Some of the Qualified Plans, however, may provide for the trustees, investment advisers or another named fiduciary to exercise voting rights in accordance with instructions from participants. Where a Qualified Plan does not provide participants with the right to given voting instructions, the Applicants submit that there is no potential or material irreconcilable conflicts of interest between or among contract owners and Plan investors with respect to voting of an Insurance Products Fund's shares. Where a Plan provides participants with the right to give voting instructions, Applicants likewise submit that there is no reason to believe that participants in Qualified Plans generally or those in a particular Plan, either as a single group or in combination with participants in other Qualified Plans, would vote in a manner that would disadvantage contract owners. In this regard, Applicants submit that the purchase of shares of an Insurance Product Fund by Qualified Plans that provide voting rights does not present any complications nor otherwise occasioned by mixed or shared funding.

18. Applicants assert that no increased conflicts of interest would be presented by the granting of the requested relief. Applicants assert that shared funding does not present any issues that do not already exist where a single insurance company is licensed to do business in several states. Applicants note that it is possible that the state insurance regulatory body in a state in which one Participant Insurance Company is domiciled could require action that is inconsistent with the requirements of insurance regulators in one or more states in which other Participating Insurance Companies are domiciled. Applicants submit that this possibility is no different and no greater than that which exists when a single insurer and its affiliates offer their insurance products in several states, as currently is permitted.

19. Applicants further submit that affiliation does not reduce the potential, if any exists, for differences in state regulatory requirements. In any event, the conditions (adapted from the conditions included in Rule 6e–3(T)(b)(15)) discussed below are designed to safeguard against any adverse effects that differences among state regulatory requirements may produce. For example, if a particular state insurance regulator's decision conflicts with the majority of other state regulators, the affected insurer may be required to withdraw its Participating Separate Account's investment in the relevant Insurance Products Funds.

20. Applicants also argue that affiliation does not eliminate the potential, if any exists, for divergent judgments as to when a Participating Insurance Company could disregard contract owner voting instructions. The potential for disagreement is limited by the requirement that disregarding voting instructions be reasonable and based on specific good faith determinations. However, if Participating Insurance Company's decision to disregard contract owner voting instructions represent a minority position or would preclude a majority vote approving a particular change, the Participating Insurance Company may be required, at the election of the relevant Insurance Products Fund, to withdraw its separate account's investment in that fund, and no charge or penalty will be imposed as a result of such a withdrawal.

21. Applicants submit that there is no reason why the investment policies of an Insurance Products Fund that engages in mixed funding would or should materially differ from what those policies would or should be if that fund, or a series thereof, supported only variable annuity or only variable life insurance contracts. Hence, Applicants assert there is no reason to believe that conflicts of interest would result from mixed funding. Moreover, Applicants state that the Insurance Products Funds will not be managed to favor or disfavor any particular insurer or type of contract.

22. Applicants submit that no one investment strategy can be identified as appropriate to a particular insurance product. Each pool of variable annuity and variable life insurance contract owners is composed of individuals of diverse financial status, age, insurance and investment goals. An investment company supporting even one type of insurance product must accommodate these diverse factors. Applicants assert that the sale of shares to Qualified Plans should not increase the potential for material irreconcilable conflicts of interest between or among different types of investors. Applicants also assert that regardless of the type of shareholder in each Insurance Product Fund, WRIMCO is or would be contractually or otherwise obligated to manage each Insurance Products Fund solely and exclusively in accordance with that fund's investment objectives, policies and restrictions as well as any guidelines established by the board of directors (or trustees) of each Insurance Products Fund.

23. As noted above, Section 817(h) of the Code imposes certain diversification standards on the assets underlying Variable Contracts held in the portfolios of management investment companies. Treasury Regulation § 1.817–5, which establishes diversification requirements for such portfolios, specifically permits, among other things, qualified pension or retirement plans and separate accounts to share the same underlying management investment company. Therefore, Applicants assert that neither the Code, nor the Treasury regulations, nor the revenue rulings thereunder, present any inherent conflicts of interest if Qualified Plans, variable annuity separate accounts and variable life separate accounts all invest in the same management investment company.

24. Applicants note that while there may be differences in the manner in which distributions from Variable Contracts and Qualified Plans are taxed, the tax consequences do not raise any conflict of interest. When distributions are to be made, and Participating Separate Account or the Qualified Plan cannot net purchase payments to make the distributions, the Separate Account or Qualified Plan will redeem shares of the relevant Insurance Products Funds at their net asset value. The Qualified Plan will then make distributions in accordance with the terms of the Plan. The Participating Insurance Company will surrender values from the Separate Account into the general account to make distributions in accordance with the terms of the Variable Contract.

25. Applicants also state that it is possible to provide an equitable means of giving voting rights to Participating Separate Account Variable Contract owners and to Qualified Plans. Each Insurance Products Fund or its agent will inform each Participating Insurance Company of each Participating Separate Account's ownership in the Fund shares, as well as inform the trustees of Qualified Plans of their holdings. Each Participating Insurance Company will then solicit voting instructions in accordance with Rules 6e–2 and 6e–3(T), as applicable, and its participation agreement with the relevant Insurance Products Fund. Shares held by Qualified Plans will be voted in accordance with applicable law. The voting rights provided to Qualified Plans with respect to shares of Insurance Products Funds would be no different from the voting rights that are provided to Qualified Plans with respect

to shares of funds sold to the general public.

26. Applicants submit that the ability of the Insurance Products Funds to sell their respective shares directly to Qualified Plans does not create a ''senior security,'' as this term is defined under Section 18(g) of the 1940 Act, with respect to any contract owner as opposed to a participant in a Qualified Plan. Regardless of the rights and benefits of participants in the Qualified Plans or contract owners, the Qualified Plans and the Participating Separate Accounts have rights only with respect to their respective shares of the Insurance Products Funds. They can only redeem such shares at their net asset value. No shareholder of any of the Insurance Products Funds has any preference over any other shareholder with respect to distribution of assets or payment of dividends.

27. Applicants state that there are no conflicts between the contract owners of Participating Separate Accounts and Qualified Plan participants with respect to the state insurance commissioners' veto power over investment objectives. The state insurance commissioners have been given the veto power in recognition of the fact that insurance companies usually cannot simply redeem their separate accounts out of one fund and invest in another. Generally, time-consuming, complex transactions must be undertaken to accomplish these redemptions and transfers. On the other hand, trustees of Qualified Plans can make the decision quickly and redeem their shares of an Insurance Products Fund and reinvest in another funding vehicle without the same regulatory impediments faced by separate accounts, or, as is the case with most plans, even hold cash pending suitable investment. Based on the foregoing, Applicants represent that even if conflicts of interest arise between contract owners and Qualified Plans participants, the issues can be almost immediately resolved because the trustees of the Qualified Plans can, on their own, redeem the shares of the Insurance Products Funds.

28. Applicants assert that various factors have prevented more insurance companies from offering variable annuity and variable life insurance contracts than currently do so. Applicants state that these factors include the costs of organizing and operating a funding medium, the lack of expertise with respect to investment management (principally with respect to stock and money market investments), and the lack of public name recognition as investment professionals. Applicants state that in particular, some smaller life insurance companies may not find it economically feasible, or within their investment or administrative expertise, to enter the Variable Contract business on their own. Applicants assert that use of the Insurance Products Funds as common investment medium for Variable Contracts would alleviate these concerns. Participating Insurance Companies would benefit not only from the investment advisory and administrative expertise of WRIMCO, but also from the cost efficiencies and investment flexibility afforded by a large pool of funds. Therefore, Applicants assert, making the Insurance Products Funds available for mixed and shared funding may encourage more insurance companies to offer Variable Contracts. This should result in increased competition with respect to both Variable Contract design and pricing, which can be expected to result in more product variation and lower charges.

29. Applicants also submit that mixed and shared funding also should benefit Variable Contract owners by eliminating a significant portion of the costs of establishing and administering separate funds. Furthermore, the sale of shares of the Insurance Products Funds to Qualified Plans should further increase the amount of assets available for investment by those funds. This should benefit Variable Contract owners by promoting economies of scale, by permitting greater safety through greater diversification, and by making the addition of new portfolios to an Insurance Products Fund more feasible.

**Applicants' Conditions**

Applicants have consented to the following conditions:

1. A majority of the board of directors (''Board'') of each Insurance Products Fund will consist of persons who are not ''interested persons'' thereof, as defined by Section 2(a)(19) of the 1940 Act and the Rules thereunder and as modified by any applicable orders of the Commission, except that if this condition is not met by reason of the death, disqualification, or bona fide resignation of any trustee or director, then the operation of this condition shall be suspended for: (a) For a period of 45 days, if the vacancy or vacancies may be filled by the Board; (b) for a period of 60 days, if a vote of shareholders is required to fill the vacancy or vacancies; or (c) for such longer period as the Commission may prescribe by order upon application.

2. Each Board will monitor its respective Insurance Products Fund for the existence of any material irreconcilable conflict between the interests of the contract owners of all Participating Separate Accounts and the interests of the participants in Qualified Plans investing in the Insurance Products Fund and determine what action, if any, should be taken in response to such conflicts. A material irreconcilable conflict may arise for a variety of reasons, including: (a) An action by any state insurance regulatory authority; (b) a change in applicable federal or state insurance, tax or securities laws or regulations, or a public ruling, private letter ruling, no-action or interpretive letter, or any similar action by insurance, tax, or securities regulatory authorities; (c) an administrative or judicial decision in any relevant proceeding; (d) the manner in which the investments of the Insurance Products Fund are being managed; (e) a difference in voting instructions given by variable annuity contract owners, variable life insurance contract owners and trustees of the Qualified Plans; (f) a decision by a Participating Insurance Company to disregard the voting instructions of contract owners; or (g) if applicable, a decision by a Plan to disregard voting instructions of its participants.

3. Participating Insurance Companies, WRIMCO (or any other investment adviser of an Insurance Products Fund), and Qualified Plans that execute a fund participation agreement upon becoming an owner of 10% or more of an Insurance Products Fund's assets (''Participants'') will report any potential or existing conflicts to the Board of any relevant Insurance Products Fund. Participants will be responsible for assisting the appropriate Board in carrying out its responsibilities under these conditions by providing the Board with all information reasonably necessary for the Board to consider any issues raised. This responsibility includes, but is not limited to, an obligation of each Participating Insurance Company to inform the Board whenever it has determined to disregard voting instructions from contract owners, and, when pass-through voting is applicable, an obligation of each Plan to inform the Board whenever it has determined to disregard voting instructions from Plan participants. The responsibilities to report such information and conflicts and to assist the Boards will be contractual obligations of all Participants under their agreements governing participation in the Insurance Products Funds and such agreements shall provide, in the case of Participating Insurance Companies, that these responsibilities will be carried out with a view only to the interests of the contract owners, and,

in the case of Qualified Plans, that these responsibilities will be carried out with a view only to the interest of Plan participants.

4. If a majority of the Board of an Insurance Products Fund, or a majority of its disinterested members, determines that a material irreconcilable conflict exists, the relevant Participants will, at their expense and to the extent reasonably practicable (as determined by a majority of the disinterested Board members), take whatever steps are necessary to remedy or eliminate the irreconcilable material conflict, including: (a) Withdrawing the assets allocable to some or all of the Participating Separate Accounts or Plans from the Insurance Products Fund or any series thereof and reinvesting such assets in a different investment medium, which may include another series of an Insurance Products fund or another Insurance Products fund, or submitting the question of whether such reinvestment should be implemented to a vote of all affected contract owners and Plan participants and, as appropriate, segregating the assets of any appropriate group (*i.e.,* variable annuity contract owners or variable life insurance contract owners of one or more Participating Insurance Companies or Plan participants) that votes in favor of such reinvestment, or offering to the affected contract owners and Plan participants the option of making such a change; and (b) establishing a new registered management investment company or managed separate account. If a material irreconcilable conflict arises because of a Participant's decision to disregard contract owner voting instructions and that decision represents a minority position or would preclude a majority vote, the Participant may be required, at the election of the Insurance Products Fund, to withdraw its investment in such fund, and no charge or penalty will be imposed as a result of the withdrawal. To the extent permitted by applicable law, the responsibility to take remedial action in the event of a Board determination of material irreconcilable conflict and to bear the cost of such remedial action will be a contractual obligation of all Participants under their agreements governing participation in the Insurance Products Fund, and these responsibilities will be carried out with a view only to the interests of the contract owners and Plan participants.

5. For the purposes of condition 4, a majority of the disinterested members of the applicable Board will determine whether or not any proposed action adequately remedies any material irreconcilable conflict, but in no event will the Insurance Products Fund, WRIMCO or any of their respective affiliates be required to establish a new funding medium for any Participant. No Participating Insurance Company or Qualified Plan shall be required by condition 4 to establish a new funding medium for any variable Contract or Plan if: (a) An offer to do so has been declined by a vote of a majority of the Variable Contract owners or Plan participants materially and adversely affected by the irreconcilable material conflict; or (b) pursuant to governing Plan or Variable Contract documents and applicable law, the Plan or Participating Insurance Company makes such decision without a vote of the Plan participants or Variable Contract owners.

6. Any Board's determination of the existence of a material irreconcilable conflict and its implications will be made known promptly in writing to all Participants.

7. Participating Insurance Companies will provide pass-through voting privileges to contract owners who invest in Participating Separate Accounts so long as the Commission interprets the 1940 Act to require pass-through voting for contract owners. Accordingly, the Participating Insurance Companies will vote shares of an Insurance Products fund held in their Participating Separate Accounts in a manner consistent with voting instructions timely received from contract owners. Participating Insurance Companies will be responsible for assuring that each of their Participating Separate Accounts investing in an Insurance Products Fund calculates voting privileges in a manner consistent with all other Participating Insurance Companies. The obligation to calculate voting privileges as provided in the Application will be a contractual obligation of all Participating Insurance Companies under the agreements governing participation in the Insurance Products Fund. Each Participating Insurance Company will vote shares for which it has not received timely voting instructions, as well as shares attributable to it, in the same proportion as it votes shares for which it has received voting instructions. Each Qualified Plan will vote as required by applicable law and governing Plan documents.

8. All reports of potential or existing conflicts received by a Board, and all Board action with regard to determining the existence of a conflict, notifying Participants of a conflict, and determining whether any proposed action adequately remedies a conflict, will be properly recorded in the minutes of the appropriate Board or other appropriate records, and such minutes or other records shall be made available to the Commission upon request.

9. Each Insurance Products fund will notify all Participants that disclosure in separate account prospectuses or Plan prospectuses or other Plan disclosure documents regarding potential risks of mixed and shared funding may be appropriate. Each Insurance Products Fund will disclose in its prospectus that: (a) The Insurance Products Fund is intended to be a funding vehicle for variable annuity and variable life insurance contracts offered by various insurance companies and for Plans; (b) due to the differences of tax treatment and other considerations, the interests of various contract owners participating in an Insurance Products Fund and the interests of Qualified Plans investing in that Insurance Products Fund may conflict; and (c) the Board of that Insurance Products Fund will monitor for the existence of any material conflicts and determine what action, if any, should be taken.

10. Each Insurance Products Fund will comply with all provisions of the 1940 Act requiring voting by shareholders (which, for these purposes, will be the persons having a voting interest in shares of the Insurance Products Fund), and in particular, each Insurance Products Fund will either provide for annual meetings (except to the extent that the Commission may interpret Section 16 of the 1940 Act not to require such meetings) or comply with Section 16(a), and if applicable, Section 16(b) of the 1940 Act. Further, each Insurance Products Fund will act in accordance with the Commission's interpretation of the requirements of Section 16(a) with respect to periodic elections of directors or trustees and with whatever rules the Commission may promulgate with respect thereto.

11. if, and to the extent that, Rules 6e–2 and 6e–3(T) are amended (or Rule 6e–3 under the 1940 Act is adopted) to provide exemptive relief from any provision of the 1940 Act or the rules thereunder with respect to mixed or shared funding on terms and conditions materially different from any exemptions granted in the Order requested by Applicants, then the Insurance Products Funds and the Participants, as appropriate, will take such steps as may be necessary to comply with Rules 6e–2 and 6e–3(T), as amended, or Rule 6e–3, as adopted, to the extent applicable.

12. No less than annually, the Participants shall submit to the Boards such reports materials, or data as the Boards may reasonably request so that the Boards may carry out fully the

obligations imposed upon them by the conditions contained in the Application. Such reports, materials, and data shall be submitted more frequently if deemed appropriate by the applicable Boards. The obligations of the Participating Insurance Companies and Qualified Plans to provide these reports, materials, and data to the Boards shall be a contractual obligation of all Participating Insurance Companies and Qualified plans under the agreements governing their participation in the Insurance Products Funds.

13. In the event that a Plan should ever become an owner of 10% or more of the assets of an Insurance Products Fund, such Plan will execute a fund participation agreement including the conditions set forth herein, to the extent applicable, with that Insurance Products Fund. A plan will execute an application containing an acknowledge of this condition at the time of its initial purchase of shares of the Insurance Products Fund.

**Conclusion**

For the reasons summarized above, Applicants assert that the requested exemptions are appropriate in the public interest and consistent with the protection of investors and the purposes fairly intended by the policy and provisions of the 1940 Act.

For the Commission, by the Division of Investment Management, pursuant to delegated authority.

**Margaret H. McFarland,**

*Deputy Secretary.*

[FR Doc. 99–22621 Filed 8–30–99; 8:45 am]

BILLING CODE 8010–01–M

## SECURITIES AND EXCHANGE COMMISSION

**[Release No. 34–41781; File No. SR–MCC–99–01]**

## Self-Regulatory Organizations; Midwest Clearing Corporation; Order Approving a Proposed Rule Change Relating to Sponsored Account Fund Deposits

August 23, 1999.

On February 26, 1999, the Midwest Clearing Corporation (''MCC'') filed with the Securities and Exchange Commission (''Commission'') a proposed rule change (File No. SR–MCC–99–01) pursuant to Section 19(b)(1) of the Securities Exchange Act of 1934 (''Act'').[1] Notice of the proposal was published in the **Federal Register** on May 26, 1999.[2] No comment letters were received. For the reasons discussed below, the Commission is approving the proposed rule change.

**I. Description**

MCC sponsors accounts (''sponsored accounts'') at qualified clearing agencies[3] for certain eligible Chicago Stock Exchange specialists, floor brokers, and market makers (''sponsored participants'') to provide them with access to the clearance, settlement, and depository services of the qualified clearing agencies. To cover any losses that MCC may incur from maintaining the sponsored accounts, MCC requires sponsored participants to contribute to MCC's sponsored account fund. A sponsored participant's required contribution to MCC's sponsored account fund currently is the greater of $15,000 (''minimum contribution'') or 110% of the amount calculated pursuant to the formula of NSCC and DTC (''alternative contribution''). According to MCC, both NSCC and DTC require a minimum deposit of $10,000.[4] Therefore, the current minimum amount a sponsored participant must contribute to the sponsored account fund is $22,000, which is based on the alternative contribution formula.[5]

The proposed rule change increases the minimum contribution from $15,000 to $150,000. The increase will be phased-in over a twelve month period. To announce the actual phase-in dates, MCC will issue an administrative bulletin no later than thirty days after the Commission's order approving the proposal. The first phase-in date will be no more than 60 days from the date the bulletin is published and will increase the minimum contribution to $50,000. The second and third phase-in dates will be six months and twelve months from the initial phase-in date and increase the minimum contribution to $10,000 and $150,000, respectively.

**II. Discussion**

Section 17A(b)(3)(F)[6] of the Act requires that the rules of a clearing agency be designed to assure the safeguarding of securities and funds which are in the custody or control of the clearing agency or for which it is responsible. The Commission finds that increasing the sponsored account fund deposit is consistent with MCC's obligations under Section 17A(b)(3)(F) of the Act because the additional funds should increase the likelihood that MCC will have sufficient funds to settle the securities transactions of a sponsored participant that becomes insolvent.

**III. Conclusion**

On the basis of the foregoing, the Commission finds that the proposal is consistent with the requirements of the Act and in particular with the requirements of Section 17A of the Act and the rules and regulations thereunder.

*It is therefore ordered,* pursuant to Section 19(b)(2) of the Act, that the proposed rule change (File No. SR–MCC–99–01) be, and hereby is, approved.

For the Commission by the Division of Market Regulation, pursuant to delegated authority.[7]

**Margaret H. McFarland,**

*Deputy Secretary.*

[FR Doc. 99–22552 Filed 8–30–99; 8:45 am]

BILLING CODE 8010–01–M

[1] 15 U.S.C. 78s(b)(1).

[2] Securities Exchange Act Release No. 41427 (May 19, 1999), 64 FR 28542.

[3] MCC uses the services of two qualified clearing agencies on behalf of its sponsored participants: the National Securities Clearing Corporation (''NSCC'') and The Depository Trust Company (''DTC'')

[4] Letter from Paul B. O'Kelly, Executive Vice President, Market Regulation and Legal, Chicago Stock Exchange (March 19, 1999).

[5] Using NSCC's and DTC's minimum deposit of $10,000 each, MCC's alternative contribution formula is as follows: 110% of $10,000 + 110% of $100,000 = $22,000.

[6] 15 U.S.C. 78q–1(b)(3)(F).

[7] 17 CFR 200.30–3(a)(12).

## SMALL BUSINESS ADMINISTRATION

## Data Collection Available for Public Comments and Recommendations

**ACTION:** Notice and request for comments.

**SUMMARY:** In accordance with the Paperwork Reduction Act of 1995, this notice announces the Small Business Administration's intentions to request approval on a new, and/or currently approved information collection.

**DATES:** Submit comments on or before November 1, 1999.

**ADDRESSES:** Send all comments regarding whether this information collection is necessary for the proper performance of the function of the agency, whether the burden estimate is accurate, and if there are ways to minimize the estimated burden and enhance the quality of the collection, to James E. Rivera, Senior Loan Officer, Office of Disaster Assistance, Small Business Administration, 409 3rd Street, S.W. Suite 6050, Washington, DC 20416.

**FOR FURTHER INFORMATION CONTACT:** James E. Rivera, Senior Loan Officer, 202–205–6734 or Curtis B. Rich, Management Analyst, 202–205–7030.

**SUPPLEMENTARY INFORMATION:**

*Title:* ''Pre-Disaster Mitigation Loan Program''.

*Form No:* SBA Form 5M.

*Description of Respondents:* Business located in communities participating in the Federal Emergency Management Agency's ''Project Impact'' and may only be used for mitigation measures against disasters identified as high risk by the participating Project Impact Community.

*Annual Responses:* 2,500.

*Annual Burden:* 7,500.

Dated: August 24, 1999.

**Jacqueline White,**

*Chief, Administrative Information Branch.*

[FR Doc. 99–22561 Filed 8–30–99; 8:45 am]

BILLING CODE 8025–01–P

## SOCIAL SECURITY ADMINISTRATION

### Agency Information Collection Activities: Proposed Request and Comment Request

In compliance with Public Law 104–13, the Paperwork Reduction Act of 1995, SSA is providing notice of its information collections that require submission to the Office of Management and Budget (OMB). SSA is soliciting comments on the accuracy of the agency's burden estimate; the need for the information; its practical utility; ways to enhance its quality, utility and clarity; and on ways to minimize burden on respondents, including the use of automated collection techniques or other forms of information technology.

I. The information collections listed below will be submitted to OMB within 60 days from the date of this notice. Therefore, comments and recommendations regarding the information collections would be most useful if received by the Agency within 60 days from the date of this publication. Comments should be directed to the SSA Reports Clearance Officer at the address listed at the end of this publication. You can obtain a copy of the collection instruments by calling the SSA Reports Clearance Officer on (410) 965–4145, or by writing to him at the address listed at the end of this publication.

1. *Statement of Living Arrangements, In-Kind Support and Maintenance-0960–0174.* Form SSA–8006 provides a nationally-uniform vehicle for collecting information from SSI applicants and recipients about whether they receive income from in-kind support and maintenance. Responses are used to determine eligibility for SSI benefits payable. The respondents are individuals applying for SSI or whose eligibility is being reevaluated.

*Number of Respondents:* 438,400.

*Frequency of Response:* 1.

*Average Burden Per Response:* 7 minutes.

*Estimated Annual Burden:* 51,147 hours.

2. *Quickstart Enrollment Form-0960–0564.* The information collected on this form is needed by SSA to facilitate electronic transmission of data for direct deposit of funds to a payee's account. The respondents are Social Security and SSI recipients requesting direct deposit to their financial institutions.

*Number of Respondents:* 3,950,000.

*Frequency of Response:* 1.

*Average Burden Per Response:* 3 minutes.

*Estimated Annual Burden:* 197,500 hours.

3. *Supplemental Security Income Claim Information Notice-0960–0324.* The information collected on Form SSA–L8050–U3 will be used by SSA to ensure that all sources of potential income which can be used to provide for an individual's own support and maintenance are utilized. The respondents are applicants for SSI and recipients who are potentially eligible for benefits from other public or private programs.

*Number of Respondents:* 7,500.

*Frequency of Response:* 1.

*Average Burden Per Response:* 10 minutes.

*Estimated Annual Burden:* 1,250 hours.

4. *Marital Relationship Questionnaire-0960–0460.* The information collected on Form SSA–4178 is needed by SSA to determine whether unrelated individuals of the opposite sex who are living together, and present themselves to the public as husband and wife, should be paid as a couple or two eligible individuals. The information is used to determine whether correct payment is being made to SSI couples and individuals. The respondents are applicants for and recipients of SSI who are living together in a questionable relationship.

*Number of Respondents:* 5,100.

*Frequency of Response:* 1.

*Average Burden Per Response:* 5 minutes.

*Estimated Annual Burden:* 425 hours.

5. *Letter to Employer Requesting Information About Wages Earned by Beneficiary—0960–0034.* The information on Form SSA–L725 is used by SSA to establish the exact amount of wages earned by a beneficiary and to determine the amount of benefit payment, should one be due. The respondents are employers of the beneficiaries.

*Number of Respondents:* 150,000.

*Frequency of Response:* 1.

*Average Burden Per Response:* 40 minutes.

*Estimated Annual Burden:* 100,000 hours.

II. The information collections listed below have been submitted to OMB for clearance. Written comments and recommendations on the information collections would be most useful if received within 30 days from the date of this publication. Comments should be directed to the SSA Reports Clearance Officer and the OMB Desk Officer at the addresses listed at the end of this publication. You can obtain copies of the OMB clearance packages by calling the SSA Reports Clearance Officer on (410) 965–4145, or by writing to him.

1. *Application for Widow's or Widower's Insurance Benefits—0960–0004.* SSA uses the information collected on Form SSA–10–BK to determine whether the applicant meets the statutory and regulatory conditions for entitlement to widow(er)'s benefits. The respondents are applicants for widow(er)'s benefits.

*Number of Respondents:* 288,580.

*Frequency of Response:* 1.

*Average Burden Per Response:* 15 minutes.

*Estimated Annual Burden:* 72,145 hours.

2. *Request for Waiver of Overpayment Recovery Or Change in Repayment Notice—0960–0037.* Form SSA–632 collects information on the circumstances surrounding overpayment of Social Security Benefits to recipients. SSA uses the information to determine whether recovery of an overpayment amount can be waived or must be repaid and, if repaid, how recovery will be made. The respondents are recipients of Social Security, Medicare, Black Lung or Supplemental Security Income overpayments.

*Number of Respondents:* 500,000.

*Frequency of Response:* 1.

*Average Burden Per Response:* 120 minutes.

*Estimated Annual Burden:* 1,000,000 hours.

3. *Application for Supplemental Security Income—0960–0444.* The information collected on Form SSA–8001 is used by SSA to determine whether applicants for SSI benefits meet all statutory and regulatory requirements for eligibility and, if so, the amount of benefits payable. The respondents are applicants for SSI benefits.

*Number of Respondents:* 1,011,046.

*Frequency of Response:* 1.

*Average Burden Per Response:* 15 minutes.

*Estimated Annual Burden:* 252,762 hours.

4. *Disability Evaluation Study—0960–NEW.* The Social Security Administration is sponsoring the Disability Evaluation Study (DES), a national disability study of the civilian non-institutionalized population of working-age adults aged 18–69. The DES will provide a key source of data for disability program and policy goals of critical interest to SSA, Congress, and others. SSA will collect information from individuals, aged 18 to 69 years, and their medical providers. SSA will use the information to:

- Estimate and project the size of the potential pool of eligible persons, that is, severely impaired working age individuals who, but for work or other reasons, meet SSA's definition of disability;
- Determine what enables individuals with severe impairments to work;
- Construct self-reported disability measures to be included on national surveys to monitor future program changes and changes in the pool of eligible persons;
- Examine relationships between disability and retirement for older workers;
- Evaluate ways to improve the current disability decision process, such as use of additional objective performance measures.

Following is a listing of the information that will be collected and the burden imposed on the public:

| Title of collection | Number of respondents | Frequency of response | Average burden hours per response | Estimated annual burden hours |
|---|---|---|---|---|
| Pilot Study: | | | | |
| Focus groups, cognitive laboratory studies, and pretest | 100 | 1 | 2.00 | 200 |
| In-person canvassing for area probability sample | 11,795 | 1 | 0.08 | 944 |
| Initial Screening | 11,882 | 1 | 0.50 | 5,941 |
| Follow-up Screening, Comprehensive Survey Interview, Forms for obtaining informed consent, release of medical records, and release of SSA records | 1,800 | 1 | 1.50 | 2,700 |
| Medical Examination | 1,000 | 1 | 2.00 | 2,000 |
| Provide Medical Records | 2,000 | 1 | 0.50 | 1,000 |
| Total (Pilot) | 28,577 | ..... | ..... | 12,785 |
| Main Study: | | | | |
| In-person canvassing for area probability sample | 55,405 | 1 | 0.08 | 4,432 |
| Initial Screening | 56,031 | 1 | 0.50 | 28,016 |
| Follow-up Screening, Comprehensive Survey Interview, Forms for obtaining informed consent, release of medical records, and release of SSA records | 10,000 | 1 | 1.50 | 15,000 |
| Medical Examination | 5,500 | 1 | 2.00 | 11,000 |
| Provide Medical Records | 11,000 | 1 | 0.50 | 5,500 |
| Total (Main) | 137,936 | ..... | ..... | 63,948 |
| Total (Overall) | 166,513 | ..... | ..... | 76,733 |

(SSA Address): Social Security Administration, DCFAM, Attn: Frederick W. Brickenkamp, 6401 Security Blvd., 1–A–21 Operations Bldg., Baltimore, MD 21235.

(OMB Address): Office of Management and Budget, OIRA, Attn: Lori Schack, New Executive Office Building, Room 10230, 725 17th St., NW, Washington, DC 20503.

Dated: August 25, 1999.

**Frederick W. Brickenkamp,**

*Reports Clearance Officer, Social Security Administration.*

[FR Doc. 99–22623 Filed 8–30–99; 8:45 am]

BILLING CODE 4190–29–P

## DEPARTMENT OF STATE

**[Public Notice No. 3119]**

### Secretary of State's Advisory Committee on Private International Law (ACPIL), Study Group on Judgments; Meeting Notice

There will be a public meeting of the Study Group on Judgments of the Secretary of State's Advisory Committee on Private International Law on Friday, September 10, 1999, from 9:00 a.m. to 4:00 p.m. in Room 1107 of the U.S. Department of State, 2201 C Street, NW, Washington, DC.

The purpose of the meeting is to consider legal issues related to the project of the Hague Conference on Private International Law to prepare a multilateral convention on jurisdiction and the recognition and enforcement of foreign civil judgments. The meeting will assist the Department of State to prepare the U.S. position for the fifth negotiating session of the Hague Conference's Special Commission on October 25–30, 1999.

The Study Group will consider a provisional draft of the convention reported out of the fourth negotiating session in June 1999, and which will be before the delegates to the fifth session in October 1999. The provisional draft represents an important revision of the preliminary text considered in June at the Hague.

Major issues that will be before the Study Group include: the substantive scope of the convention, including whether it should apply to government litigation, and maritime and nuclear litigation; the scope of application to defendants; jurisdiction in contract, tort, over branches, and based on minimum contacts; prohibited bases of jurisdiction, including tag jurisdiction and general doing business jurisdiction; concurrent filings in separate national courts; *forum non conveniens*; provisional and protective measures; exceptions to enforcement such as lack of fairness or impartiality in the judgment court; and treatment of punitive, noncompensatory, and ''excessive'' damages.

It is expected that changes to the provisional draft convention decided at the October negotiating session in the Hague will be reported to a Diplomatic Conference in October 2000 charged with final consideration and adoption of the convention.

Persons interested in the provisional draft convention or in attending the

September 10 Study Group meeting in Washington may request a copy of the draft. Requests may be sent to Ms. Rosie Gonzales by fax at 202–776–8482, by phone at 202–776–8420, by email to <pildb@his.com>, or by letter to the address below. Please include your request, name, phone number, and mailing address. Alternatively, the text of the draft may be found at the Hague Conference website: <www.hcch.net/events/e/events.html>.

The Study Group meeting is open to the public up to the capacity of the meeting room. As access to the State Department building is controlled, any person wishing to attend should provide Ms. Gonzales with his or her name, social security number, and date of birth by no later than Monday, September 6, to ensure admission to the building.

It would also be helpful to include affiliation, address, telefax and telephone numbers, and email address for purposes of updating the Department's contact list. Participants should be sure to use only the 23rd Street entrance of the State Department, between C and D Streets, NW, where someone will be present to assist them. Due to revised security procedures all participants must arrive prior to 10:30 a.m., and re-admission to the building may not be possible.

Those unable to attend but wishing to have their views considered may send their views, attention Ms. Gonzales, to the above fax number or email address, or to the following address: Office of the Assistant Legal Adviser for Private International Law, Suite 203, South Building, 2430 E St., NW, Washington, DC 20037–2800.

**Jeffrey D. Kovar,**

*Assistant Legal Adviser for Private International Law .*

[FR Doc. 99–22657 Filed 8–30–99; 8:45 am]

BILLING CODE 4710–08–P

## DEPARTMENT OF STATE

**[Public Notice 3120]**

### Director General of the Foreign Service and Director of Personnel; State Department Performance Review Board Members (At-Large Board)

In accordance with section 4312(c)(4) of the Civil Service Reform Act of 1978 (Pub. L. 95–454), The Executive Resources Board of the Department of State has appointed the following individuals to the State Department Performance Review Board (At-Large Board) register.

Todd F. Buchwald, Assistant Legal Advisor for Political and Military Affairs, Office of the Legal Advisor, Department of State

Margaret Grafeld, Director, Information Resource Management Programs & Services, Bureau of Information Resource Management, Department of State

Marilyn Hulbert, Director, Office of African Affairs, United States Information Agency

Edward J. Lacey, Director, Office of Verification and Compliance, Bureau of Arms Control, Department of State

Cathrine J. Russell, Executive Director, Foreign Service Institute, Department of State

William B. Wood, Geographer, Bureau of Intelligence and Research, Department of State

Dated: August 24, 1999.

**Edward W. Gnehm, Jr.,**

*Director General of the Foreign Service and Director of Personnel.*

[FR Doc. 99–22658 Filed 8–30–99; 8:45 am]

BILLING CODE 4710–15–P

## DEPARTMENT OF TRANSPORTATION

### Office of the Secretary

### Aviation Proceedings, Agreements Filed During the Week Ending August 20, 1999

The following Agreements were filed with the Department of Transportation under the provisions of 49 U.S.C. Sections 412 and 414. Answers may be filed within 21 days of date of filing.

*Docket Number:* OST–99–6134
*Date Filed:* August 17, 1999
*Parties:* Members of the International Air Transport Association
*Subject:*
PTC COMP 0494 dated 13 August 1999
Composite Expedited Resolution 024j
Special Construction Rules (Amending)
Intended effective date: 1 October 1999

*Docket Number:* OST–99–6142
*Date Filed:* August 18, 1999
*Parties:* Members of the International Air Transport Association
*Subject:*
PTC COMP 0495 dated 13 August 1999
Composite Expedited Resolutions
Intended effective date: 15 October 1999 for implementation 1 April 2000

*Docket Number:* OST–99–6144
*Date Filed:* August 18, 1999
*Parties:* Members of the International Air Transport Association
*Subject:*
PTC2 EUR–ME 0083 dated 13 July 1999
Europe-Middle East Resolutions r1–r36
Minutes—PTC2 EUR–ME 0084 dated 13 August 1999
Tables—PTC2 EUR–ME Fares 0034 dated 20 July 1999
Intended effective date: 1 January 2000

*Docket Number:* OST–99–6145
*Date Filed:* August 18, 1999
*Parties:* Members of the International Air Transport Association
*Subject:*
CTC COMP 0210 dated 20 August 1999
Mail Vote 030—Resolution 010qq
Special Cargo Amending Resolution from Bangladesh (all rates from Bangladesh converted into US Dollars)
Intended effective date: 1 September 1999

*Docket Number:* OST–99–6146
*Date Filed:* August 18, 1999
*Parties:* Members of the International Air Transport Association
*Subject:*
PTC1 0115 dated 13 August 1999
Expedited TC1 Caribbean Resolution 015v
PTC1 0017 dated 13 August 1999
Expedited Within South America Resolutions
Intended effective date: 1 October 1999

*Docket Number:* OST–99–6147
*Date Filed:* August 18, 1999
*Parties:* Members of the International Air Transport Association
*Subject:*
PTC2 AFR 0068 dated 20 August 1999
Mail Vote 031—Resolution 010d
TC2 Within Africa Special Passenger Amending Resolution from Mozambique
Intended effective date: 25 August 1999

*Docket Number:* OST–99–6148
*Date Filed:* August 18, 1999
*Parties:* Members of the International Air Transport Association
*Subject:*
PTC1 0116 dated 13 August 1999
TC1 Longhaul Expedited Resolutions r1–r5
Intended effective date: 1 October 1999

*Docket Number:* OST–99–6149
*Date Filed:* August 18, 1999
*Parties:* Members of the International Air Transport Association
*Subject:*
PTC2 EUR–AFR 0087 dated 20 August 1999
Mail Vote 033—Resolution 010f
TC2 Europe-Africa Special Passenger

Amending Resolution from Libya to Croatia
Intended effective date: 1 October 1999

*Docket Number:* OST–99–6152
*Date Filed:* August 19, 1999
*Parties:* Members of the International Air Transport Association
*Subject:*
PTC COMP 0496 dated 13 August 1999
Composite Expedited Resolution 024d (Amending) Rounding units for Hungary (Extract of Minutes and Summary included)
Intended effective date: 1 November 1999

*Docket Number:* OST–99–6153
*Date Filed:* August 19, 1999
*Parties:* Members of the International Air Transport Association
*Subject:*
PTC2 AFR 0067 dated 20 August 1999 (Adoption)
PTC2 AFR 0065 dated 27 July 1999 (Issuance)
Mail Vote 026—Resolution 010z
TC2 Within Africa Special Passenger Amending Resolution from Malawi
Intended effective date: 1 September 1999

*Docket Number:* OST–99–6155
*Date Filed:* August 20, 1999
*Parties:* Members of the International Air Transport Association
*Subject:*
PTC23 AFR–TC3 0067 dated 20 August 1999 (Adoption)
Mail Vote 028—Resolution 010b
TC23 Africa-TC3 Special Passenger Amending Resolution
Intended effective date 1 September 1999

**Dorothy W. Walker,**
*Federal Register Liaison.*
[FR Doc. 99–22608 Filed 8–30–99; 8:45 am]
BILLING CODE 4910–62–P

## DEPARTMENT OF TRANSPORTATION

### Office of the Secretary

### Notice of Applications for Certificates of Public Convenience and Necessity and Foreign Air Carrier Permits Filed Under Subpart Q During the Week Ending August 20, 1999

The following Applications for Certificates of Public Convenience and Necessity and Foreign Air Carrier Permits were filed under Subpart Q of the Department of Transportation's Procedural Regulations (See 14 CFR 302.1701 *et seq.*). The due date for Answers, Conforming Applications, or Motions to Modify Scope are set forth below for each application. Following the Answer period DOT may process the application by expedited procedures. Such procedures may consist of the adoption of a show-cause order, a tentative order, or in appropriate cases a final order without further proceedings.

*Docket Number:* OST–99–6150.

*Date Filed:* August 18, 1999.

*Due Date for Answers, Conforming Applications, or Motions to Modify Scope:* September 15, 1999.

*Description:* Application of Smokey Bay Air, Inc. pursuant to 49 U.S.C. Section 41102 and Subpart Q, applies for a certificate of public convenience and necessity authorizing interstate air transportation of mail, passengers, and property between any point in any state in the United States or District of Columbia, or any territory or possession of the United States, and any other point in any state of the United States or the District of Columbia, or any territory or possession of the United States.

**Dorothy W. Walker,**
*Federal Register Liaison.*
[FR Doc. 99–22607 Filed 8–30–99; 8:45 am]
BILLING CODE 4910–62–P

## DEPARTMENT OF TRANSPORTATION

### Federal Aviation Administration

### Agency Information Collection Activity Under OMB Review

**AGENCY:** Federal Aviation Administration (FAA), DOT.

**ACTION:** Notice.

**SUMMARY:** In compliance with the Paperwork Reduction Act of 1995 (44 U.S.C. 3501 *et seq.*), this notice announces that the Information Collection Request (ICR) abstracted below has been forwarded to the Office of Management and Budget (OMB) for extension of currently approved collections. The ICR describes the nature of the information collection and its expected burden. The **Federal Register** Notice with a 60-day comment period soliciting comments on the following collection of information was published on June 1, 1999, [FR 64, page 29404–29405].

**DATES:** Comments must be submitted on or before September 30, 1999. A comment to OMB is most effective if OMB receives it within 30 days of publication.

**FOR FURTHER INFORMATION CONTACT:** Judy Street on (202) 267–9895.

**SUPPLEMENTARY INFORMATION:**

*Federal Aviation Administration (FAA)*

*Title:* General Aviation/Air Taxi Activity and Avionics Survey.
*Type of Request:* Extension of a currently approved collection.
*OMB Control Number:* 2120–0060.
*Form(s):* FAA Form 1800–54.
*Affected Public:* 30,000 Owners of general aviation aircraft.
*Abstract:* The information collected on this survey, such as number of active aircraft by aircraft type, distribution of aircraft by state and FAA region, annual operations, airframe hours, engine hours, annual hours flown by day/night, and by weather conditions, fuel consumption, etc. is used by the FAA, NTSB, and other government agencies, the aviation industry, and others for safety assessment, planning forecasting, cost/benefit analysis, and to target areas for research.
*Estimated Annual Burden Hours:* 4,875 burden hours annually at 15 minutes per respondent.

**ADDRESSES:** Send comments to the Office of Information and Regulatory Affairs, Office of Management and Budget, 725—17th Street, NW., Washington, DC 20503, Attention: FAA Desk Officer.

*Comments Are Invited On:* Whether the proposed collection of information is necessary for the proper performance of the functions of the Department, including whether the information will have practical utility; the accuracy of the Department's estimate of the burden of the proposed information collection; ways to enhance the quality, utility and clarity of the information to be collected; and ways to minimize the burden of the collection of information on respondents, including the use of automated collection techniques or other forms of information technology.

Issued in Washington, DC, on August 25, 1999.

**Patricia W. Carter,**
*Acting Manager, Standards and Information Division, APF–100.*
[FR Doc. 99–22617 Filed 8–30–99; 8:45 am]
BILLING CODE 4910–13–M

## DEPARTMENT OF TRANSPORTATION

### Federal Highway Administration

### Environmental Impact Statement: Paulding and Defiance Counties, Ohio and Allen County, Indiana

**AGENCY:** Federal Highway Administration (FHWA), DOT.

**ACTION:** Notice of intent.

**SUMMARY:** The FHWA is issuing this notice to advise the public that an

environmental impact statement will be prepared for a proposed highway project in Paulding and Defiance Counties, Ohio and Allen County, Indiana.

**FOR FURTHER INFORMATION CONTACT:** Mark L. Vonder Embse, Field Operations Engineer, Federal Highway Administration, 200 North High Street, Room 328, Columbus, Ohio 43215, Telephone: (614) 280–6854.

**SUPPLEMENTARY INFORMATION:** The FHWA, in cooperation with the Ohio Department of Transportation (ODOT), will prepare an environmental impact statement (EIS) on a proposal to improve US–24 between the I–469 bypass around the City of Fort Wayne, Indiana, and the City of Defiance, Ohio. This segment of US–24 is approximately 40 miles in length.

Improvement to US–24 is considered necessary to enhance the operational characteristics of east- and west-bound traffic between Fort Wayne, Indiana and Defiance, Ohio.

Alternatives under consideration include: (1) Taking no action; (2) constructing the highway on new alignment; (3) upgrading the existing alignment. The alternative on new alignment has sub-alternatives providing for various access options.

Letters describing the proposed action and soliciting comments were sent to appropriate Federal, State, and local agencies, and to private organizations and citizens who have previously expressed or are known to have interest in this proposal. A series of public meetings will be held in the project area. In addition, a public hearing will be held. Public notice will be given of the time and place of the meetings and hearing. The draft EIS will be available for public and agency review and comment prior to the public hearing. Scoping activities are planned for 1999.

To ensure that the full range of issues relating to this proposed action are addressed, and all significant issues identified, comments and suggestions are invited from all interested parties. Comments or questions concerning this proposed action and the EIS should be sent to the FHWA at the address provided above.

(Catalog of Federal Domestic Assistance Program Number 20.205, Highway Planning and Construction. The regulations implementing Executive Order 12372 regarding intergovernmental consultation on Federal programs and activities apply to this program)

Issued on August 18, 1999.

**Mark L. Vonder Embse,**

*Field Operations Engineer, Federal Highway Administration, Columbus, Ohio.*

[FR Doc. 99–22624 Filed 8–30–99; 8:45 am]

BILLING CODE 4910–22–P

# Corrections

Federal Register
Vol. 64, No. 168
Tuesday, August 31, 1999

This section of the FEDERAL REGISTER contains editorial corrections of previously published Presidential, Rule, Proposed Rule, and Notice documents. These corrections are prepared by the Office of the Federal Register. Agency prepared corrections are issued as signed documents and appear in the appropriate document categories elsewhere in the issue.

## DEPARTMENT OF AGRICULTURE

### Rural Housing Service

### Notice of Request for Comments on Information Collection Package

*Correction*

In notice document 99–19293 appearing on page 40814 in the issue of Wednesday, July 28,1999, make the following correction:

On page 40814, in the third column, under the heading **DATES:**, ''August 27, 1999'' should read ''September 27, 1999''.

[FR Doc. C9–19293 Filed 8–30–99; 8:45 am]

BILLING CODE 1505–01–D

## DEPARTMENT OF TRANSPORTATION

### Federal Aviation Administration

### 14 CFR Part 27

**[Docket No. 29247; Amendment No. 27-37]**

**RIN 2120-AF33**

### Normal Category Rotorcraft Maximum Weight and Passenger Seat Limitation

*Correction*

In rule document 99–21378, beginning on page 45092, in the issue of Wednesday, August 18, 1999, make the following corrections:

1. On page 45092, in the second column, under the heading **Background**, in the second paragraph, in the 11th line, ''manufacturers.'' should read ''manufacturers,''.

2. On page 45092, in the second column, in the fourth paragraph, in the eighth line, ''of'' should read ''or''.

3. On page 45094, in the first column, under the heading **Federalism Implications**, in the first paragraph, in the 11th line, ''the'' should read ''a '' .

4. On page 45094, in the first column, under the heading **Unfunded Mandates Assessment**, in the first paragraph, in the sixth line, ''by'' should read ''of''.

**§ 27.1305 [Corrected]**

5. On page 45095, in the third column, in § 27.1305, in the heading ''powrplant'' should read ''powerplant''.

[FR Doc. C9–21378 Filed 8-30-99; 8:45 am]

BILLING CODE 1505–01–D

## DEPARTMENT OF TRANSPORTATION

### Federal Aviation Administration

### 14 CFR Part 29

**[Docket No. 24802; Amendment No. 29-44]**

**RIN 2120-AG86**

### Airworthiness Standards; Transport Category Rotorcraft Performance

*Correction*

In rule document 99–21380, beginning on page 45336, in the issue of Thursday, August 19, 1999, make the following correction(s):

**§ 29.62 [Corrected]**

1. On page 45337, in the third column, in paragraph 4., in the first line, ''Secti8on''should read ''Section''.

**§ 29.67 [Corrected]**

2. On page 45338, in the first column, in paragraph (a)(3)(i), in the first line, ''operative'' should read ''inoperative''.

[FR Doc. C9–21380 Filed 8-30-99; 8:45 am]

BILLING CODE 1505–01–D

## DEPARTMENT OF TRANSPORTATION

### Federal Aviation Administration

### 14 CFR Part 71

**[Airspace Docket No. 99–ACE–14]**

**RIN 2120–AA66**

### Modification of VOR Federal Airways, MO

*Correction*

In rule document 99–20394 beginning on page 43069 in the issue of Monday, August 9, 1999, make the following corrections:

**§71.1 [Corrected]**

1. On page 43070, in the second column, in paragraph **V–10 [Revised]**, in the fourth line from the bottom, ''INT Revloc;'' should be removed.

2. On the same page, in the third column, in paragraph **V–116 [Revised]**, in the ninth line, ''Mackson'' should read ''Jackson''.

3. On the same page, in the same column, in paragraph **V–159 [Revised]**, in the sixth line, ''Valcan'' should read ''Vulcan''.

[FR Doc. C9–20394 Filed 8–30–99; 8:45 am]

BILLING CODE 1505–01–D

## DEPARTMENT OF TRANSPORTATION

### Federal Aviation Administration

### 14 CFR Part 91

**[Docket No. 29279; SFAR No. 86]**

**RIN 2120-AG79**

### Airspace and Flight Operations Requirements for the Kodak Albuquerque International Balloon Fiesta; Albuquerque, NM

*Correction*

In rule document 99–21268, appearing on page 44814, in the issue of Tuesday, August 17, 1999, make the following correction:

On page 44814, in the first column, the subject line is corrected to read as set forth above.

[FR Doc. C9–21268 Filed 8-30-99; 8:45 am]

BILLING CODE 1505–01–D

federal register

Tuesday
August 31, 1999

# Part II

# Department of Transportation

## National Highway Traffic Safety Administration

## 49 CFR Part 571

## Federal Motor Vehicle Safety Standards; Child Restraint Systems; Child Restraint Anchorage Systems; Final Rule

**DEPARTMENT OF TRANSPORTATION**

**National Highway Traffic Safety Administration**

**49 CFR Part 571**

**[Docket No. NHTSA–99–6160]**

**RIN 2127–AH65**

## Federal Motor Vehicle Safety Standards; Child Restraint Systems; Child Restraint Anchorage Systems

**AGENCY:** National Highway Traffic Safety Administration (NHTSA), Department of Transportation.

**ACTION:** Final rule, response to petitions for reconsideration.

**SUMMARY:** This document responds to some of the issues raised by petitions for reconsideration of a March 1999 final rule establishing Federal Motor Vehicle Safety Standard No. 225, Child Restraint Anchorage Systems. The standard requires vehicle manufacturers to install the upper (tether) anchorages of universal child restraint anchorage systems, beginning September 1, 1999, and lower anchorages of those systems beginning September 1, 2000. This fall, we plan to publish a second document responding further to the petitions.

In response to concerns of several petitioners about leadtime for and the stringency of the anchorage strength and other requirements in the March 1999 final rule, this document permits vehicle manufacturers to meet alternative requirements during an initial several year period. During this period, manufacturers have the alternative of meeting either the requirements in the March 1999 final rule or the less stringent Canadian requirements for tether anchorages, and those set forth in a draft standard being developed by a working group of the International Organization for Standardization (ISO) for lower anchorages. The temporary alternative for tether anchorages lasts until September 1, 2001, and that for lower anchorages until September 1, 2002.

This document also clarifies the test procedures used to test tether anchorages and the lower child restraint anchorage systems; excludes shuttle buses from the standard; denies petitions from the Coalition of Small Volume Automobile Manufacturers and Indiana Mills and Manufacturing; and makes technical amendments to correct some of the figures and other portions of the March 1999 final rule, including amendments to Standard No. 213.

**DATES:** The amendments made in this rule are effective September 1, 1999.

Petitions for reconsideration of this rule must be received by October 15, 1999.

**ADDRESSES:** Petitions for reconsideration should refer to the docket number of this document and be submitted to: Administrator, Room 5220, National Highway Traffic Safety Administration, 400 Seventh Street SW, Washington, DC, 20590.

**FOR FURTHER INFORMATION CONTACT:**

For nonlegal issues: George Mouchahoir, PhD., (202–366–4919), Office of Crashworthiness Standards, NHTSA.

For legal issues: Deirdre R. Fujita, Esq., Office of the Chief Counsel (202–366–2992), NHTSA.

Both of these officials can be reached at the National Highway Traffic Safety Administration, 400 Seventh St., SW, Washington, DC, 20590.

**SUPPLEMENTARY INFORMATION:**

I. Summary of March 1999 Final Rule
a. Final rule
b. Key implementation dates
c. Rationale for the compliance dates for the final rule
II. Petitions for Reconsideration of Final Rule
III. Response to Petitions
a. Universal child restraint anchorage systems for motor vehicles
1. Leadtime
A. Tether anchorage
B. Lower anchorages
C. General issues about the options
2. Harmonization
3. Notice and opportunity to comment
4. Other issues
A. Procedures for testing tether anchorages
B. Issues relating to the application of the standard
C. Written instructions
b. Requirements for child restraints relating to September 1, 1999 compliance date
1. Audible or visual indication of attachment
2. Attachments must be permanent
c. Reasons for the effective date of this rule
IV. Corrections to Final Rule
V. Rulemaking Analyses and Notices
a. Executive Order 12866 (Federal Regulation) and DOT Regulatory Policies and Procedures
b. Regulatory Flexibility Act
c. Executive Order 12612
d. Unfunded Mandates Reform Act
e. National Technology Transfer and Advancement Act
f. National Environmental Policy Act
g. Executive Order 12778 (Civil Justice Reform)
h. Paperwork Reduction Act

## I. Summary of March 1999 Final Rule

### *a. Final Rule*

On February 27, 1999, President Clinton announced a new motor vehicle safety standard to improve the installation of child restraints in motor vehicles. The new rule, published by NHTSA on March 5, 1999, requires the installation of universal systems for attaching child restraints in vehicles (64 FR 10786). Most vehicles will be required to have these systems at two rear seating positions. Each system will have three anchorages: two lower anchorages and one upper anchorage. The lower anchorages are two 6 mm round steel bars fastened to the vehicle roughly a foot apart and positioned where the vehicle seat cushion and seat back meet. The upper anchorage is a ring to which the upper tether of a child restraint can be attached. In addition, an upper anchorage will be required at a third seating position. New child seats will have components that snap or hook onto these anchorages. By requiring an easy-to-use anchorage system that is independent of the vehicle seat belts, the new rule makes it easier to install child restraints securely and will thereby increase safety for children.

To the extent consistent with safety, we sought to harmonize our rule with requirements being considered by standard bodies and regulatory authorities in Europe and elsewhere. We considered a number of alternatives to the anchorage system we ultimately adopted, including anchorage system designs developed by General Motors and by Cosco, a child restraint manufacturer. Ultimately, we chose to establish performance requirements that were based on a draft standard [1] developed by the International Organization for Standardization (ISO), a worldwide voluntary federation of ISO member bodies. While safety was the overriding consideration, we made this decision due, in part, to the global standardization advantages associated with a harmonized standard. We stated that we anticipated that the ISO, which began work on an independent child restraint anchorage system in the early 1990's, will be adopting the draft standard as a final standard within the next year, and that incorporation of the ISO standard into the regulations of the European Community is likely to follow. Our rule harmonized also with a regulatory initiative by Transport Canada to require user-ready tether anchorages in vehicles sold in Canada.

In our final rule, we adopted most of the draft ISO standard for the lower bars and most of the requirements of the Canadian requirements for the tether anchorages. However, our final rule also imposed strength requirements for tether anchorages and the lower bars that, while essentially equivalent to the

[1] ISO/DIS 13216–1, Road vehicles—Child restraint systems—Anchorages in vehicles and attachments to anchorages—Part 1: Dimensions, strength requirements and general requirements, June 22, 1998.

requirements we proposed in our NPRM, are higher than those that are specified by the draft ISO and the Canadian standards.

Tether Anchorage

The NPRM proposed that the tether anchorage would be tested in a static pull test. A force of 5,300 Newtons (N) would be applied by a belt strap that attaches to the tether anchorage, and applied in the forward horizontal direction. The 5,300 N force would be attained within 30 seconds, with an onset force rate not exceeding 135,000 N per second, and maintained at the 5,300 N level for one second. We proposed that each structural component of the anchorage must withstand the 5,300 N force, and that there must not be any complete separation or failure of any anchorage component. Each tether anchorage would be tested separately. However, if two or more designated seating positions on a bench seat are equipped with a tether anchorage, separate 5,300 N forces would be simultaneously applied to each tether anchorage.

The final rule adopted a static pull test using a test fixture, instead of a belt strap, to apply the test forces to the tether anchorage. The fixture has a configuration representative of a child restraint system. The fixture is attached to the tether anchorage at the fixture's top, and is attached to the vehicle seat at the fixture's bottom end (at the intersection of the vehicle seat cushion and back) using the vehicle's seat belt or the lower bars of a child restraint anchorage system. The test force is applied pulling on a cable that is attached to a point on the fixture. A force of 15,000 N is applied to the fixture, which in turn, applies the force to the three anchorage points (the tether anchorage and the seat belt anchorages or the lower bars). Since the fixture is attached to three anchorage points, only a portion of the 15,000 N force is actually applied to the tether anchorage. The 15,000 N force is attained within 30 seconds, at an onset force rate of not more than 135,000 N per second; and maintained at the 15,000 N level for one second. The final rule requires that (a) there must not be any point on the tether anchorage displaced more than 125 millimeters (mm) (approximately 5 inches); and (b) there must not be complete separation of any anchorage component. Each tether anchorage is tested separately, unless two or more designated seating positions in a row of seats have a tether anchorage. In that case, NHTSA has the option of testing both tether anchorages simultaneously.

Lower Anchorages

The NPRM proposed that the lower anchorages would also be tested in a static pull test using a belt strap. Each lower anchorage at a seating position would be tested separately from the other. A force of 5,300 N would be applied to the anchorage in the forward horizontal direction. The 5,300 N force would be attained within 30 seconds, with an onset force rate not exceeding 135,000 N per second, and maintained at the 5,300 N level for ten seconds. The NPRM proposed that lower bars conforming to the draft ISO standard were one of the means that could be installed to meet the requirement to provide the lower anchorages of a child restraint anchorage system. The NPRM proposed requiring that no portion of any component attaching to the lower bar could move forward more than 125 mm, and that there must not be complete separation of any anchorage component.

The final rule required that bars be used as the lower anchorages and adopted the method of testing lower bars set forth in the draft ISO standard. That method uses a test fixture, representing a child restraint system, that has attachments at the bottom end of the fixture (at the intersection of the vehicle seat cushion and back) to attach to the lower bars. The test force is applied by pulling on a cable that is attached to a point on the fixture. A horizontal force of 11,000 N is applied to the fixture, which in turn, simultaneously applies the force to the two lower bars (the tether anchor is not attached). Since the fixture is attached to both bars, the force is divided between them. The 11,000 N force is attained within 30 seconds, at an onset force rate of not more than 135,000 N per second; and maintained at the 11,000 N level for ten seconds. The final rule requires that the lower bars must not allow a specified point on the test fixture to be displaced more than 125 mm during the pull. The final rule specifies that in the case of vehicle seat assemblies equipped with more than one child restraint anchorage system, NHTSA has the option of testing the child restraint anchorage systems simultaneously or testing the systems separately.

*b. Key Implementation Dates*

The key implementation dates (mandatory compliance dates) in the March 1999 final rule were:

*1. Beginning September 1, 1999—*

Motor vehicles

Eighty (80) percent of passenger cars must have a tether anchorage for each of a specified number of designated seating positions. Any voluntarily-provided lower bars of a child restraint anchorage system, and any voluntarily-provided additional tether anchorages, in any passenger car, light truck, bus and multipurpose passenger vehicle (MPV) must meet the strength and other requirements of the standard.

Child restraints

Child restraint systems are required to comply with a more stringent head excursion performance requirement. Effectively, this means most must have top tether straps.

*2. Beginning September 1, 2000—*

Motor vehicles

All passenger cars and light trucks, buses and multipurpose passenger vehicles (MPVs) must have specified number of tether anchorages.

A specified percentage of passenger cars, and light trucks, buses and MPVs must have lower anchorages.

*3. On or after September 1, 2002—*

Motor vehicles

All passenger cars, and all light trucks, buses and MPVs must have the new lower anchorages for a specified number of seating positions.

Child restraints

Child restraint systems must have components that attach to the lower bars.

*c. Rationale for the Compliance Dates for the Rule*

Our effective dates for requiring the universal child restraint anchorages balanced several real world needs. Manufacturers need lead time to develop and implement designs for the anchorage system, particularly those for the lower bars, and to test their vehicles for compliance with the standard and to so certify. However, we wanted manufacturers to begin to provide the anchorages as quickly as possible because a universal child restraint anchorage system will enhance the safety of child restraints by making them easier to install securely than by means of a vehicle's seat belt system. Our rule sought to balance those needs by:

(1) Phasing-in the requirement for the lower bars over a three-year period, beginning in 2000 (S4.3); and

(2) Requiring manufacturers to begin providing the user-ready upper anchorages on September 1, 1999 (S4.2).

We believed that the requirement for user-ready upper anchorages could be

implemented in most passenger cars [2] beginning September 1, 1999 and a year later in other types of vehicles because almost all new vehicles sold in this country already have (unexposed, non-user-ready) tether anchorages to meet a longstanding Canadian requirement for non-user-ready anchorages. We also selected the September 1, 1999 date because it is the compliance date that Canada had adopted for user-ready tether anchorages in new passenger cars sold in that country.

Another need addressed by our implementation dates for the final rule was to assure that any child restraint anchorage system or tether anchorage installed in a vehicle will meet minimum performance requirements, regardless of whether the system was a ''required system'' or a ''voluntarily-installed system.'' This was done to ensure that all of the 3-point child restraint anchorage systems provide at least a minimum level of safety. Accordingly, we required that:

(3) any child restraint anchorage system or tether anchorage installed in any new vehicle after September 1, 1999, must meet the configuration, location and strength requirements of the standard (S4.1).[3]

## II. Petitions for Reconsideration of Final Rule

We received petitions for reconsideration of the final rule from the Alliance of Automobile Manufacturers (''Alliance'') (whose members are BMW, DaimlerChrysler, Ford, General Motors, Mazda, Nissan, Toyota, Volkswagen, Volvo, Fiat and Isuzu), and from Honda, Volkswagen, Porsche, DaimlerChrysler, General Motors, Mitsubishi, the National Truck Equipment Association, Kolcraft, E-Z-On Products, Cosco, Toyota, Ford, the Coalition of Small Volume Automobile Manufacturers, and Indiana Mills and Manufacturing. *See* NHTSA Docket No. 98–3390, Notice 2.

The petitioners generally embrace the underlying tenet of the rule that there is a need for tether anchorages and universal child restraint anchorage systems to improve the securement of child restraints in vehicles. Nevertheless, vehicle manufacturers ask us to reconsider certain performance and other requirements. Some of them are concerned about the strength requirements for the tether anchorage and the lower bars, and assert that: (1) There is no safety need for requirements as stringent as those specified; [4] (2) tether anchorages installed in their model year (MY) 2000 vehicles were designed to meet the less stringent Canadian requirements and they will not be able to meet the requirements in the final rule by September 1, 1999; (3) they are unable to assure that voluntarily-installed anchorages planned for their MY 2000 vehicles will meet the requirements by September 1 of this year, and thus would have to ''tear out'' voluntarily-installed additional anchorages that they had already installed in vehicles slated for completion after September 1, 1999; and (4) sufficient notice and opportunity to comment was not provided for the requirements. The Alliance suggests that the agency either adopt the Canadian requirements for the tether and the draft ISO requirements for the lower bars, or delay the effective date for the rule to allow manufacturers to modify their current anchorage designs. These and the other petitioners also petition for reconsideration of a number of other issues, including issues regarding the specific test procedures of the rule and the application of the requirements to particular types of vehicles or seating positions.

## III. Response to Petitions

This document focuses on immediate problems that vehicle manufacturers are having in certifying compliance with requirements that will apply to them beginning on September 1, 1999. As noted above, that is the date on which they must begin equipping new passenger cars with tether anchorages meeting the configuration, location, strength and marking requirements in the March 1999 final rule. It is also the date on which voluntarily-installed tether anchorages and lower anchorage bars must meet those requirements. This document also addresses some other concerns as well, including suggestions for clarifying certain steps and procedures for testing the anchorages and requests to reconsider requirements of the final rule for child restraint systems. We will respond to the remaining issues raised in the petitions in separate documents that will be published in the near future.

The key changes to those implementation dates made by today's final rule are as follows:

- *From September 1, 1999 to August 31, 2001:* tether anchorages may meet strength and other requirements (i.e., those specifying where anchorages may be located, and how many must be provided in vehicles and in what seating positions they must be provided) promulgated by Transport Canada instead of the requirements set forth in the March 1999 final rule. This option will cease to be available on September 1, 2001.
- *From September 1, 1999 to August 31, 2002:* lower anchorage bars may meet strength and other requirements (i.e., those specifying anchorage dimension and location, stow ability, and marking) set forth in a draft standard issued by the ISO instead of the requirements set forth in the March 1999 final rule. This option will cease to be available on September 1, 2002.

### *a. Universal Child Restraint Anchorage Systems for Motor Vehicles*

1. Leadtime

As noted above, two requirements relating to child restraint anchorage systems go into effect on September 1, 1999: (a) manufacturers of passenger cars must provide the user-ready tether anchorages; [5] and (b) manufacturers must ensure that any tether anchorage or child restraint anchorage system installed in any new vehicle, voluntarily or pursuant to the standard, meets the configuration, location, strength and marking requirements of the standard (S4.1).

The Alliance petitioned for reconsideration of the rule on the basis of the practicability of meeting the September 1, 1999 effective date requiring installation of user-ready tether anchorages in passenger cars, stating that they cannot, by that date, complete the testing that they need to do to certify that their vehicles will meet the requirements of the final rule. They also need more time to make interior trim and structural changes to the extent necessary to meet the strength requirements. The Alliance states that member companies had geared up to meet the Canadian requirements, and had completed certification testing in passenger cars in preparation for certifying to the same requirements in

[2] The requirements are phased-in to apply to 80 percent of a manufacturer's production of passenger cars manufactured between September 1, 1999 and August 31, 2000, and to all passenger cars manufactured on or after September 1, 2000.

[3] Today's document also corrects S4.1 to include marking requirements among those that voluntarily-installed anchorage systems must meet.

[4] Not all petitioners addressing this subject believe the strength requirements were too stringent. Petitioner E-Z-On Products suggest in its petition for reconsideration that we should consider *increasing* the strength requirements for the tether anchorage.

[5] The requirement for passenger cars is phased-in, beginning September 1, 1999, with all cars required to meet the requirement as of September 1, 2000. The compliance date for installing user-ready tether anchorages in light trucks, multipurpose passenger vehicles, and buses is September 1, 2000.

the U.S.[6] The Alliance states that the strength requirements of our rule necessitate vehicle structure and interior trim changes and that these involve ''significant tooling and lead time'' to implement. Thus, many of their passenger car tether anchorage designs cannot be modified in time to meet the compliance date. The Alliance suggests that the agency either (a) Adopt the Canadian requirements for the tether and the draft ISO requirements for the lower bars, or (b) ''at a minimum delay the effective date for tether and child restraint lower anchors for one year to allow manufacturers time to modify their current anchor designs to meet these new, unique requirements.''

In addition, petitioners state that practicability problems arise also from the requirement in S4.1 that manufacturers must ensure that any tether anchorage or child restraint anchorage system voluntarily installed in any new vehicle after September 1, 1999 meets the performance requirements of the standard. The Alliance states that member companies had completed certification testing in multipurpose passenger vehicles, trucks and buses to comply voluntarily with the tether anchorage requirements earlier than the September 2000 compliance date. Because the voluntarily-installed anchorages would not meet the standard's requirements by September 1, 1999 as they are required to under S4.1, some manufacturers would be forced to remove anchorages in vehicles that will be completed after September 1, 1999, or prevented from installing such anchorages in those vehicles, ''thus depriving customers of [the anchorages'] safety benefit.'' Volkswagen (VW) states in its separate petition that it already provides lower anchorages designed to the draft ISO standard in its vehicles. That petitioner states: ''if NHTSA * * * continues to maintain the requirement in S4.1, then the provision of the systems would have to be terminated.'' VW and the Alliance suggest that S4.1 be amended so that voluntary systems complying with the draft ISO standard[7] (for the lower bars) and with Canadian requirements (for the tether anchorage) are permitted.

*A. Tether anchorage.* NHTSA has reviewed the issues raised by the petitioners relating to whether it is practicable to meet the September 1, 1999 effective date for installing tether anchorages that satisfy the requirements of the March 1999 final rule. The agency concludes that the vehicle manufacturers are capable of meeting the strength requirements in our March 1999 final rule for the tether anchorage with sufficient leadtime. In fact, data from Transport Canada indicates that many vehicles already have tether anchorages that can meet the 15,000 N requirement. Transport Canada tested a series of 15 vehicles (1999 models), using the test procedures of its tether anchorage standard, Canadian Motor Vehicle Safety Standard (CMVSS) 210.1, to measure loads attained at tether anchorages of these vehicles. Tether anchorages of 12 of these vehicles did not fail when the applied load (applied by means of a belt strap) reached a load ranging from 7,450 N to 7,884 N. We have determined that applying a horizontal 15,000 N force to the SFAD test fixtures results in forces of about 5,400 N applied horizontally to the tether anchorage using SFAD 1, and about 7,000 N applied horizontally to that anchorage using SFAD 2. (The difference is primarily due to differences between SFAD 1 and SFAD 2 as to the location of Point X on the test devices. Point X is where the force is applied to the SFAD.) Thus, tether anchorages on most of the vehicles tested by Canada sustained loads greater than the load that is specified in our March 1999 final rule. Tether anchorages of three of the 15 vehicles tested by Canada sustained between 6,979 N to 7,385 N. The tether anchorages on these vehicle may or may not need to be reinforced to meet our requirement. (These data were presented by Transport Canada at a March 31, 1999 meeting with manufacturers in Ottawa.)

While many vehicles may already meet the strength requirement of the March 1999 final rule, a number of manufacturers have said that they need time to run certification tests and analyses based on the requirements of our final rule, as opposed to the Canadian requirements. Some vehicle structure and trim might also have to be changed to meet the strength requirements of the final rule. Thus, while manufacturers that do not already comply can achieve the 15,000 N performance required of tether anchorages in the near future, they will need more time than the lead time provided in the final rule to make any necessary changes and certify compliance of their vehicles with the requirements of the final rule.

At the same time, user-ready tether anchorages installed as soon as possible would serve a child passenger safety need because they will increase the likelihood that parents will attach a top tether on the child restraint system. A tethered child restraint offers improved protection against head impact in a crash. A tether anchorage that complies with the Canadian strength requirement will be better than no tether anchorage at all (which would be the end result of manufacturers removing voluntarily installed tether anchorages after September 1, 1999). Accordingly, we are amending the standard to permit manufacturers the option of installing tether anchorages that meet Canada's strength requirements, for a two-year interim period (until August 31, 2001). During the interim, manufacturers can choose to meet the Canadian requirements. The most significant differences between the Canadian requirements and those in our final rule are Canada's specification of a lower force (10,000 N, instead of 15,000 N) and Canada's method of applying the force (permitting the manufacturer the option of specifying the force application rate, instead of specifying a range of application rates that the agency could use). During the interim, manufacturers can assess their vehicles' ability to comply with the 15,000 N force requirement and make structural changes to their vehicles, as needed. Beginning September 1, 2001, all vehicles will have to meet the 15,000 N strength requirement for all tether anchorages, whether installed voluntarily or pursuant to our standard.[8]

[6] The most significant differences between the Canadian requirements and those in our final rule are:

—the magnitude of the force that is applied to the tether anchorage (10,000 N, instead of 15,000 N);

—the rate that the force is applied to a tether anchorage in a compliance test (Canada permits the manufacturer to specify the force application rate, while under our test procedure NHTSA specifies the rate; the rate of force application can affect the stringency of the test);

—the number of tether anchorages required in multipurpose passenger vehicles that have five or fewer seats (Canada requires two tether anchorages, while we require three, in vehicles that have three or more seating positions rearward of the driver); and

—the requirement to provide a tether anchorage at a center rear seating position (Canada does not have such a requirement, while we do).

[7] It is noted that ISO has not completed finalization of its draft standard. On May 3, 1999, ISO revised the draft again.

[8] Some petitioners suggest that the 15,000 N requirement is unnecessary because Transport Canada adopted a 10,000 N requirement and because, so they believe, a tether meeting Canada's requirements will adequately withstand the forces that are imposed on a tether anchorage in a crash. On the other hand, one petitioner (E-Z-On Products) suggests that Canada's strength requirement should be increased to a higher level, to adequately withstand forces generated by children weighing 120 pounds or more.

To enable us to publish this document regarding the September 1, 1999 effective date of our rule as quickly as possible, we have deferred our response

Continued

The Alliance raises other issues related to their members' designing and manufacturing vehicles to meet the requirements established by Transport Canada for tether anchorages. Transport Canada requires only two tether anchorages in MPVs with five or fewer designated seating positions, while our final rule requires three tether anchorages in these vehicles (the same number of tether anchorages required of passenger cars). (For convenience, since most MPVs with fewer than 6 seating positions are sport utility vehicles (SUVs), we will refer to those MPVs as SUVs.) The Alliance states that Transport Canada's requirement to mandate only two tether anchorages for SUVs was based on comments submitted to it ''which stated that the seating configurations and vehicle design constraints made the mandate of three tether anchors in the rear seat impracticable for such vehicles.'' Some manufacturers state in their owner's manual not to install child restraints in the center position. The petitioner asks that we amend our standard to require only two tether anchorages for MPVs with five or fewer designated seating positions.

In evaluating this suggestion, we note that manufacturers have not submitted information to NHTSA that explains why SUVs, as a vehicle class, should have fewer tether anchorages than passenger cars or why a third tether anchor in the rear seat of these vehicles is impracticable. SUVs are used as passenger-carrying vehicles and are increasing in popularity. Further, we note that the occupancy rate of SUVs for children under 12 in the right front seat is 2.4 times that of passenger cars. We also note that Transport Canada has indicated that it might be revisiting this issue concerning the number of tether anchorages it should require in SUVs. In view of the above information and the absence of information as to why SUVs should have fewer tether anchorages than passenger cars, we have decided to retain the requirement for three tether anchorages in the long run. However, to provide manufacturers with lead time to design and manufacture SUVs with three anchorages, this rule allows manufacturers to provide only two tether anchorages until August 31, 2001. Beginning September 1, 2001, three tether anchorages will have to be provided, if there are at least three rear designated seating positions.

The Alliance also petitioned for reconsideration of our requirement that a tether anchorage must be installed at a designated seating position other than an outboard seating position, if the vehicle has such a (center) seating position. Transport Canada does not have a comparable requirement. The petitioner states that not all MPVs scheduled for introduction by the 2001 model year (i.e., September 1, 2000) have designs that meet the requirement. Petitioner also states that: ''this requirement is not practical for all [MPVs with six or more designated seating positions]. For example, a child restraint installed in the center position will block ingress/egress for the third row outboard seating position in certain vehicles.''

NHTSA is relieving manufacturers from the requirement that one of the tether anchorages must be at a center seating position, until September 1, 2001. As a practical matter, this relief will only affect manufacturers of vehicles with more than three rear designated seating positions, i.e., vehicles other than passenger cars. Vehicles with three rear designated seating positions must be equipped with three tether anchorages. In passenger cars, the rear seat only has at most three rear designated seating positions, so a center rear seat—assuming there is one—will be equipped with a tether anchorage. This amendment gives manufacturers (primarily of vehicles other than passenger cars) until September 1, 2001 to design and manufacture vehicles with a tether anchorage in a center seat. Until that date, manufacturers will have the option of not providing a tether anchorage at a center seating position, assuming they can provide the requisite number of tether anchorages without equipping a center position. On or after that date, a tether anchorage must be provided at a center (i.e., non-outboard) seating position, in vehicles with such a position.[9]

*B. Lower anchorages.* This final rule also specifies that, from September 1, 1999 until August 31, 2002, manufacturers installing the lower bars of a child restraint anchorage system will have available a compliance option. They may meet either all the requirements for lower anchorages in our March 1999 final rule, or requirements in the draft ISO standard for alternative configuration, location, strength and marking requirements, and the requirements in our March 1999 final rule on all other matters.[10] As discussed in section III.a.1.C of this preamble, a manufacturer's selection of a compliance option will be irrevocable.

These amendments are made to provide manufacturers lead time to develop lower anchorages that meet the strength requirements of our standard. Lower anchorages meeting the draft ISO requirements will provide an improved means of attaching child restraints. While the 11,000 N strength

to those comments to a later date. We are evaluating these comments and will respond to them and to other issues not addressed by today's document in a later document. For the purposes of this notice, we believe that the 15,000 N strength requirement is preferable to the 10,000 N requirement, for the reasons discussed in the March 1999 final rule. Transport Canada has publicly stated that it too is considering increasing its tether strength requirement to 15,000 N, based on data obtained since that country's implementation of its user-ready tether anchorage requirement (see technical proposal, Canada Gazette Part I, March 6, 1999).

While the 15,000 N strength requirement is preferable in the long run, we are balancing the benefits associated with tether anchorages meeting only the Canadian requirements in the short run against the possibility of there being no tether anchorages. Tether anchorages meeting the Canadian requirement will still provide an improvement to parents who might have attached a tether but did not do so because a user-ready anchorage was not present in the vehicle. In the short term, we are adopting an alternative allowing compliance with a lesser requirement as a practicable temporary approach that would reap benefits not otherwise obtainable during the interim.

[9] The final rule required a tether at a non-outboard seating position (a center position) to address the concerns of many commenters that the center rear seating position in cars would not have an improved means of attaching child restraints, even though that is the position many parents in this country prefer to place their child. (This belief is shared by the petitioner. Commenting on a different issue, the Alliance stated on page 17 of its petition for reconsideration that ''Alliance members believe that many customers will want the flexibility to install a child restraint at the center rear seat position. . .'') We believe that many parents will want to place their child in a non-outboard seating position in MPVs as well. These parents will either be frustrated if an improved means of attaching child restraints is not provided at a center position, and/or may use the non-tethered center position anyway, and will not be able to attain for their child the improved safety benefits of a tethered child restraint. As for practical problems with blocking ingress/egress for the third row, we believe the tether can be located to avoid such blockage. For example, the tether anchor could be attached to the ceiling or to the back of the lower part of the seat structure.

[10] The most significant differences between the draft ISO requirements for the lower anchorages of child restraint anchorage systems and those in our final rule are:

a. the magnitude of the force that is applied to the lower anchorages (11,000 N, instead of 8,000 N);

b. the rate that the force is applied to the lower anchorages in a compliance test (the draft ISO standard specifies that the force is fully applied within a time period of two seconds or less, while under our test procedure NHTSA specifies the rate and the time period for full application of the force may be up to 30 seconds);

c. the period of time that the force is held (the draft ISO standard specifies that the 8,000 N force is held for a period of 0.25 seconds, while we specify that it is held for 10 seconds); and

d. the allowance of stowable/foldable anchorages (the draft ISO standard permits these anchorages, while our final rule has a requirement that precludes a stowable/foldable feature, S9.1.1(g)).

e. Other differences between our rule and the draft ISO standard are discussed in the March 1999 final rule at 43 FR 10801–10802.

requirement is preferable to the ISO 8,000 N requirement, we are balancing the benefits associated with lower anchorages meeting the draft ISO requirements in the short run against the possibility of there being no improved means of attaching child restraints. Lower anchorages meeting the draft ISO requirements will still provide an improvement to parents who have difficulty attaching a child restraint correctly in a vehicle or whose vehicle seats are incompatible with child restraints. In the short term, we are adopting an alternative allowing compliance with a lesser requirement as a practicable temporary approach that would reap benefits not otherwise obtainable during the interim. The agency is thus amending the standard to enable manufacturers to provide child restraint anchorage systems in vehicles as quickly as possible.

Many of the petitioners suggested that we permit rigid but stowable/fold-away lower anchorages, as allowed in the draft ISO standard. These petitioners have been developing stowable/fold-away lower anchorages and believed that our final rule was going to permit these anchorages to be installed in vehicles. Apparently these petitioners believed that the final rule would incorporate all aspects of the draft ISO standard, including provisions in the draft standard for stowable anchorages. The draft standard does not expressly allow stowable anchorages, but instead occasionally refers to various requirements that lower anchorages have to meet while in a stored and/or ''deployed'' condition. We are permitting stowable/fold-away anchors during this interim period (until August 31, 2002) within which manufacturer may meet the requirements of the draft ISO standard.

Specifications in the draft ISO standard that we have adopted in this final rule state that the 8,000 N force that is applied in the forward pull test and the 5,000 N force that is applied in the lateral pull test is maintained for a period of 0.25 seconds ± 0.05 seconds. We interpret this hold period to mean that we may hold the maximum force for several seconds or longer; however, the lower anchorages must withstand the required force (i.e., meet the 125 mm displacement limit) only for up to 0.30 seconds.

Several petitions ask us to reconsider the need for the 11,000 N strength requirement for the lower anchorages. The 11,000 N is applied to the lower anchorages by way of a test fixture that attaches to both lower anchorages. NHTSA will respond to these issues in a subsequent document responding to other issues in the petitions. In addition, we will address suggestions concerning the test procedure used to test the lower anchorages that are not addressed by today's document.

*C. General issues about the options.* This rule specifies that a manufacturer's selection of a compliance option must be made prior to, or at the time of vehicle certification and that selection is irrevocable for that vehicle. The rationale for such a requirement was explained in the March 1999 final rule as well as in other recent agency rulemakings. To summarize, where a safety standard provides manufacturers more than one compliance option, the agency needs to know which option has been selected in order to conduct a compliance test. Moreover, based on previous experience with enforcing standards that include compliance options, the agency is aware that a manufacturer confronted with an apparent noncompliance for the option it has selected (based on a compliance test) may respond by arguing that its vehicles comply with a different option for which the agency has not conducted a compliance test. This response creates obvious difficulties for the agency in managing its available resources for carrying out its enforcement responsibilities, e.g., the possible need to conduct multiple compliance tests for first one compliance option, then another, to determine whether there is a noncompliance. To address this problem, the agency is requiring that where manufacturer options are specified, the manufacturer must select the option by the time it certifies the vehicle and may not thereafter select a different option for the vehicle. This will mean that failure to comply with the selected option will constitute a noncompliance regardless of whether a vehicle complies with another option. (Of course, as we have noted in other rulemaking proceedings, a manufacturer may petition for an exemption from the recall requirements of the statute on the basis that the noncompliance is inconsequential as it relates to motor vehicle safety.)

Executive Order 12866 and the President's memorandum of June 1, 1998, require each agency to write all rules in plain language. Application of the principles of plain language includes consideration of the following questions:

—Have we organized the material to suit the public's needs?
—Are the requirements in the rule clearly stated?
—Does the rule contain technical language or jargon that isn't clear?
—Would a different format (grouping and order of sections, use of headings, paragraphing) make the rule easier to understand?
—Would more (but shorter) sections be better?
—Could we improve clarity by adding tables, lists, or diagrams?
—What else could we do to make the rule easier to understand?

While we generally complied with those requirements in drafting this document, we did not make any significant changes to the Canadian and ISO provisions regarding child restraint anchorage systems in adding them to Standard No. 225. Since those additions are only temporary, we did not attempt to determine whether there are any significant opportunities for simplification or clarification of those provisions. If anyone believes that simplification or clarification of any of those provisions, or of any other part of the regulatory text, is necessary, please write and tell us.

*b. Harmonization*

The Alliance also petitioned for reconsideration of the final rule based on ''the lack of harmonization with other child restraint anchor activities around the world.'' Petitioner states that the rule creates a unique set of performance requirements that is not applied anywhere else in the world and is not consistent with the Canadian requirements for the tether or draft ISO requirements for the lower bars.

The most significant differences between the Canadian requirements for tether anchorages and those in our final rule are set forth in footnote 6, *supra,* and concern the magnitude of the force that is applied to the tether anchorage and the rate that the force is applied to a tether anchorage in a compliance test. The most significant differences between the draft ISO requirements for the lower anchorages of child restraint anchorage systems and those in our final rule are set forth in footnote 10, *supra,* and relate to the magnitude of the force that is applied to the lower anchorages, the rate that the force is applied in a compliance test, and the period of time that the force is held.

We believe that our final rule fully conforms to the agency's policies and priorities in this area. The agency's policy is to advance vehicle safety by identifying and adopting best safety practices from around the world and by developing new standards reflecting technological advances and current and anticipated safety problems. Thus, while we seek to harmonize our safety standards with those of other countries, we do so only to the extent consistent

with preserving our ability to adopt standards that meet U.S. vehicle safety needs. ''Statement of Policy: NHTSA Priorities and Public Participation in the Implementation of the UN/ECE 1998 Agreement on Global Technical Regulations'' (January 5, 1999, 64 FR 563). In our effort to harmonize with the Canadian requirements for the tether anchorage and the draft ISO requirements for the lower anchorages, we undertook an independent analysis of the basis for the strength requirements for the respective anchorages. We were not aware of any information warranting a 10,000 N force requirement for the tether. The only data we had indicate that the level should be 15,000 N. Further, as we said in the preamble to the final rule, we did not know why the drafters of the draft ISO standard chose the 8,000 N requirement. We also explained in the final rule document our reasons for differing from the specifications in the draft ISO standard for applying the force to the lower anchorages in the compliance test. That we set the performance requirements based on an independent analyses is fully consistent with NHTSA's policies and priorities on international harmonization.

We also note that with regard to the strength requirements for the lower bars, the draft ISO standard has not yet been adopted in final form by any country. The draft ISO standard is still undergoing revision by the working group charged with developing the standard. Because no country has adopted strength or any other requirements for the lower bars, our 11,000 N requirement, the first of its kind, is not discordant with any other standard. We should also note that our requirements are generally not mutually exclusive from those of Canada for tether anchorages and those of the draft ISO standard for the lower bars. Anchorages that are produced to meet the requirements of our March 1999 final rule will meet all the requirements of the Canadian and draft ISO standards.

3. Notice and Opportunity To Comment

The Alliance petitioned the agency to reconsider the strength test procedures and requirements for tether anchorages and the lower anchorages of a child restraint anchorage system. The Alliance argues that the agency included these provisions in the final rule without first giving the public an opportunity to comment on the provisions and thus violated the informal rulemaking provisions of the Administrative Procedure Act. The Alliance states that:

> [T]he test procedures and strength requirements for the top tether anchors and the test procedures for lower anchors were neither proposed in the NPRM nor logically grow from it. The NPRM published on February 20, 1997 discussed the strength requirement and test procedure for top tethers in Part 571.210b, Section S4.4. It states ''. . . the tether anchorage with the tether anchorage hardware installed shall, when tested in accordance with S5, withstand a force of 5,300 N. There shall be no complete separation or failure of any anchorage component.'' The final rule, in Section 6.3 imposes a 125 mm deflection requirement that was not proposed or discussed in the NPRM. In addition, the final rule, in Section 8 imposes a test procedure that applies a 15,000 N force to a test fixture which was not proposed or discussed in the NPRM.
>
> The NPRM discusses the test procedure for lower anchorages in Part 571.210a, Section S5. It states ''Test each lower anchorage separately, with or without connectors provided with the vehicle. Apply a force of 5,300 N to each anchorage in the forward horizontal direction . . .'' The final rule, in Section 11, imposes a test procedure which applies an 11,000 N force to a test fixture. This test procedure is not proposed or discussed in the NPRM.

The agency disagrees with the Alliance. The test method adopted in the final rule is similar to one of two alternative test methods discussed in the NPRM in connection with assessing the real-world performance of child restraint anchorage systems. The first approach was to apply test forces to all anchorages, simultaneously, by means of a child restraint. This method would also have tested child restraints for compliance with Standard No. 213 by attaching the child restraint to an actual vehicle anchorage system. Testing actual vehicle anchorage systems with actual child restraints would have increased the real-world representativeness of the test method. However, in the section of the NPRM entitled ''Proposal for New Vehicle Standard, Highlights of Proposal,'' we acknowledged that there were difficulties with this approach:

> If vehicles were tested with actual child seats, and vice versa, and if a vehicle anchorage system, for example, were found to fail the proposed requirements, an issue could arise as to whether the failure was with the vehicle system, or with the child seat attached to the vehicle system. To avoid this complication, the compliance tests must be as controlled as possible to remove unknown influences on the performance of regulated parts.

62 FR 7870.

Because NHTSA was concerned that testing a vehicle anchorage system with an actual child restraint could possibly introduce factors that could complicate enforcement efforts, the agency tentatively rejected that alternative. We favored an alternative approach, which was to test each anchor of a child restraint anchorage system individually by attaching a belt strap to the anchor and pulling it at a specified force. We discussed in the NPRM our tentative conclusion that this alternative would replicate real-world performance, but acknowledged that this approach also had limitations:

> A potential but seemingly necessary limitation in the proposed compliance tests is that the vehicle system is statically tested by devices that replicate the loads imposed by a child seat, and a child restraint is dynamically tested on a seat assembly simulating a vehicle seat. That is, an actual vehicle anchorage system would not be tested with an actual child restraint, and vice versa. This is to avoid possibly complicating enforcement efforts if an apparent failure arises in a compliance test. . . .
>
> While the actual vehicle-to-child seat attachment would not be tested, NHTSA believes that the performance obtained in the compliance test will reflect the real-world performance of the anchorage system and the child restraint. This is because the geometry of the belts and latchplates primarily responsible for the vehicle-to-child seat interface would be precisely specified by this proposal. These components would have to be provided on vehicles and child seats precisely as specified in the standards. In turn, these components, in the same geometry as that specified in the standards, would be used in the compliance tests. Thus, the vehicle-to-child seat interface should be adequately tested.

Id.

Since use of the straps would avoid the problems associated with use of child restraint systems, although at the cost of some loss of real-world representativeness, we proposed a strength requirement and a static pull test for the tether anchorage that were the same as the then-Canadian proposal for user-ready tether anchorages. The agency proposed that the anchorage would have to withstand a force of not less than 5,300 N, applied to the tether anchorage by a belt strap (see I.a. of this preamble, supra, for discussion of the provisions for the strength requirements in the NPRM and final rule). In the section of the NPRM entitled ''Proposal for New Vehicle Standard, Performance,'' the agency requested comments ''on whether more specificity is needed for these strength requirements and on whether other performance requirements should be included in the standard.'' 62 FR 7873.

In the final rule, we decided to apply the test forces to child restraint anchorage systems by means of surrogates for child restraint systems. We adopted use of the surrogates because they better simulate the real-

world interaction between a child restraint and the vehicle anchorages than testing the anchorages individually by means of a belt strap.

The adopted approach is very similar to the one we tentatively rejected in the NPRM, i.e., the one that used actual child restraint systems to apply the test forces. We had tentatively rejected that approach out of concern that using child restraints in the compliance test would introduce too many additional variables into the compliance testing process. The decision to substitute child restraint surrogates for actual child restraint systems adequately addressed the problem of uncontrollable factors. The surrogates, called ''static force application devices (SFADs)'' in the final rule, distribute the forces generated in a crash as a child restraint does in dynamic crash testing. However, because they are controlled test devices, their use in compliance testing does not introduce the same potential concerns noted above that using an actual child restraint could pose. In the final rule, thus, we balanced the concerns underlying the interest expressed in the NPRM in using actual child restraints to more assuredly obtain test results related to real world performance with the concerns also expressed in the NPRM in having the test be as controlled as possible to remove unknown influences on the test results.[11]

The use of child restraint surrogates to test child restraint anchorage systems in vehicles was strongly supported by the commenters. Many vehicle manufacturers suggested that applying the load, by way of a child restraint surrogate, to all three anchorages simultaneously better evaluates how the tether anchorage would perform in the real world than by testing the anchorages individually. GM suggested that using a test fixture representative of a child restraint to apply a test force is a more relevant measure of child restraint excursion than the proposal. The fixture it suggested was the SFAD 1 fixture (which GM calls ''the Structural Fixture'') ultimately adopted by our final rule. ''By using the Structural Fixture, the displacement of the CRS [child restraint system] due to structural deformation of the anchorages is more accurately demonstrated.'' (GM comment, page 8, and Attachment E thereto, page 1, May 21, 1997, Item No. 96–095–N03–027 in Docket No. 96–095–N03.) GM and Ford suggested that loading all three anchorages at one time (the two lower anchorages and the top tether anchorage) is the most appropriate method to evaluate in a static load test how a child restraint will perform dynamically in limiting forward excursion.

The fixtures we selected were jointly developed by the vehicle manufacturers and Transport Canada for use in testing child restraint anchorages in Canadian vehicles. Similar to this agency, Transport Canada will use the SFAD 1 fixture to test tether anchorages at a seating position that does not have the lower bars of a child restraint anchorage system. (The fixture is attached at its bottom, at the vehicle seat bight, by the vehicle's seat belt.) The other fixture, ''SFAD 2,'' will be used to test tether anchorages at a seating position that has the lower bars of a child restraint anchorage system. SFAD 2 is from the draft ISO standard ISO/DIS 13216–1. Both of these fixtures were discussed for use in Canada's tether anchorage regulation at a September 11, 1998 meeting between Canadian and US representatives of vehicle and child restraint manufacturers and Canadian officials. The meeting was organized by the Canadian Vehicle Manufacturers' Association (CVMA). We placed a memorandum describing what we were informed about the meeting into the docket; see 96–95–N3–00071, dated October 31, 1997, as corrected in 96–95–N3–00071A, dated July 20, 1999.

The magnitude of the load that is to be applied to each test fixture (15,000 N) is essentially equivalent to the magnitude of the load that was proposed in the NPRM. Applying a horizontal 15,000 N force to the SFAD 1 fixture, which in turn applies the load to three anchor points on the vehicle (one of which is the tether anchor), results in a horizontal force of about 5,400 N applied to the tether anchorage, assuming no interference of the fixture with other vehicle components. This was explained in the final rule, 64 FR 10808. (''This final rule has increased this [the proposed strength requirement of 5,300 N applied horizontally to an individual anchor] to 15,000 N to reflect the use of the fixture in testing tether anchorages.'') Applying a horizontal 15,000 N force to SFAD 2, which in turn applies the load to three anchor points on the vehicle, results in a horizontal force of about 7,000 N applied to the tether anchorage, which is only about 30 percent higher than the horizontal 5,300 N proposed in the NPRM. In addition, as noted in the preamble to the final rule, we also chose the force level because test data indicated that it is needed to help ensure that tether anchorages will be able to bear the loads generated by children in forward-facing child restraints (64 FR 10808).

In the final rule, we adopted a performance measure based on the amount of deflection, i.e., it specified that tether anchorages must not deflect such that a point on a test fixture moves more than 125 mm during the application of test forces. We adopted the deflection limit because it is a more objective measure of performance than the requirement originally proposed in the NPRM, i.e., that an anchorage ''withstand'' the required force. The NPRM expressly requested comments as to whether the ''withstand'' requirement and the other strength requirements should be more specific, i.e., more objective. 62 FR 7873. GM suggested in its comment to the NPRM that measuring movement of the child restraint test fixture is a more relevant measure of child restraint excursion. GM suggested in its comment that a final rule require that a ''point I'' on the fixture must not displace more than 125 mm longitudinally from its initial position. Finally, the 125 mm deflection requirement was proposed in the NPRM as the proposed performance requirement for the two lower anchorages of the child restraint anchorage system. Because those lower anchorages and the tether anchorage together constitute a ''child restraint anchorage system,'' it was a logical outgrowth of the NPRM that all three are subject to the same deflection limit as a measure of acceptable performance. By giving the public notice of the subjects and issues being considered, and adopting changes that are a logical outgrowth of the NPRM, the agency fully satisfied the requirements of the Administrative Procedure Act.

With regard to the lower anchorages, we proposed that they could consist of either a flexible latchplate system or a rigid bar anchorage system (the system permitted by the draft ISO standard). Since the testing of those systems presented essentially the same problems as testing tether anchorages, we resolved those problems in the same way. We tentatively rejected the use of child restraint systems to apply test forces simultaneously to the lower anchorages and proposed instead to apply test forces separately by means of a strap. Further, our statements in the NPRM provided notice that we were determining the appropriate level of

[11] Standard No. 210 also uses test devices to apply test loads to seat belt assembly anchorages. The devices are a pelvic body block that represents a human pelvis and a torso block that represents a human upper torso. Prior to our March 1999 final rule, seat belts and seat belt anchorages were the standardized anchorage system used to anchor child restraints in vehicles. The approach taken by our March 1999 final rule, to use a test device to apply the loads, is logically related to the method now used to test the current anchorage system for child restraints.

performance to mandate for the lower anchorages, and that the requirements and procedures of the draft ISO standard were being considered.

In response, a number of commenters urged us to adopt use of the test fixture, representing a child restraint system, specified in the draft ISO standard for the purpose of applying an 8,000 N force to the lower anchorages. Comments were also provided on the levels of force that should be applied to the anchorages, and the length of time those should be held.

The procedures and requirements we adopted for the lower anchorages are a logical outgrowth of the proposal. The test procedures we adopted for testing the rigid bars are directly based on those in the draft ISO standard. These procedures include use of a test fixture that applies test loads to the two lower anchorages simultaneously, rather than individually. For the reasons discussed above with respect to tether anchorages, use of a test fixture is preferable both to testing the lower anchorages separately using a strap and to testing them simultaneously using actual child restraint systems. Finally, the magnitude of the load that the final rule applies to the lower anchorages simultaneously by way of the fixture (11,000 N) is almost the same as the sum of the horizontal loads (10,600 N) that we proposed in the NPRM for testing the strength of the lower anchorages (5,300 N applied horizontally to each lower anchorage). We note that that force level is also supported by test data (see discussion in preamble to final rule, 64 FR 10805).

The Alliance also states that we did not provide notice and an opportunity to comment on the requirement in the final rule to provide three tether anchorages. The petitioner states:

> The agency proposal would have had the effect of requiring only two tether anchors, at seating positions with lower anchors. Thus the agency has provided no notice of a requirement for a third anchor at the center seat position, and no lead time.

We disagree with the Alliance that about the adequacy of notice. The NPRM requested comments on the number of anchorage systems we should require. The agency stated in the NPRM:

> There was no consensus among the [14 rulemaking] petitioners as to the number of child restraint anchorage systems that should be required and where in the rear they should be. Many believe that the system should be installed at each of the outermost designated seating positions of the second row (and a tether anchorage in the rear lap-belt center position). The Japanese vehicle manufacturers believe that only one rear seat position should be required to have the system. Fisher-Price, a child restraint manufacturer, believes that the rear center seating position is recognized as the safest and that the system should therefore be required there. * * * NHTSA has tentatively determined that each vehicle with a rear seat should have at least two rear seating positions that can properly hold a child restraint system. The agency is concerned whether there is a need for an anchorage system at more than two seating positions. NHTSA requests information on this issue, such as demographic data on the number of children in child restraints typically transported in a family vehicle. * * * This proposal does not specify that both anchorage systems would have to be provided at an outboard position. In some vehicles with large interiors, it may be possible to install one of the required systems in a center seating position.* * *

62 FR 7871.

These statements in the preamble to the NPRM provided clear notice that we were exploring alternatives to the proposed number of required child restraint anchorage systems. The notice specifically raised the issues of requiring a tether anchorage in a center rear seating position, of providing a tether anchorage at the location (center rear seat) preferred by many parents for placing a child, and of how many improved attachment systems are needed. Many commenters addressed the issue of how many seating positions should have a child restraint anchorage system, with most suggesting that an additional (i.e., third) tether anchor should be required (if not a full child restraint anchorage system). From these comments, we learned that many parents will want an improved means of attaching child restraints in the center rear seating position. We did not require that one of the two full child restraint anchorage systems be installed in the rear center position because it may be difficult to fit the lower anchorages of two child restraint anchorage systems adjacent to each other in the rear seat of small vehicles. However, we decided that a tether anchorage at the center rear position will improve the attachment of child restraints at that desired position and will provide parents with flexibility in deciding where they restrain their children. Based on the foregoing, we conclude that requiring a third tether anchorage and one at a center seating position was a logical outgrowth of the NPRM and that the agency fully satisfied the requirements of the APA.

4. Other issues

*A. Procedures for testing tether anchorages.* This section responds to suggestions in some of the petitions for reconsideration for amending the final rule's test conditions and procedures for testing tether anchorages. Some petitioners believe that some of the test conditions and procedures could be clearer and made more objective.

We have decided to adopt some of the suggestions and not adopt others. The test conditions and procedures discussed in this section of the document are those set forth in S7 and S8 of the final rule to test tether anchorages that are certified as meeting the requirements of the March 1999 final rule. As discussed today in Section III, above, until September 1, 2001, manufacturers have the option of certifying their tether anchorages to the requirements set by Transport Canada. Such tethers will be tested according to the conditions and procedures in the Canadian standard.

The Alliance suggests several changes to S8.1 of the final rule, which specifies how the 15,000 N force will be applied to the tether anchorage. Petitioner suggests that the initial angle of pull specified in S8.1.(c)(2) should be 10 ±5 degrees, rather than ''not more than 5 degrees.'' Petitioner explains that the angle of pull in the final rule can cause the force application cable to rub on the SFAD test device, thus potentially affecting the force on the tether strap. NHTSA has made the suggested change. Interference of the SFAD on the cable could affect the loads that are actually applied to the tether anchorage, which is undesirable. Increasing the angle of pull to 10 ±5 degrees, from not more than 5 degrees, will eliminate the potential for interference and will not significantly affect the magnitude of the load applied to the device (the horizontal component of the applied load may be reduced by about 3 percent).

The Alliance suggests other changes to the manner in which the test force is applied to the tether anchorage. Petitioner suggests that S8.1(c)(3) be amended to clarify that the requisite force is held for one second, and not longer. We have made this change. Petitioner also suggests that S8.1(c)(3) should permit manufacturers to select the time period for application of the test force, as long as it is within the 30-second time limit. Such an amendment would permit the manufacturer to load the tether anchorage with the maximum 15,000 N load in a short period of time (relative to the 30-second time limit), e.g., 3 to 5 seconds. The petitioner states that Canada allows the vehicle manufacturer to select the time period for application of the test force, as long as the period is within the 30-second time limit, and will use the manufacturer's selected force application time period in compliance

testing. (We have confirmed with Transport Canada that this is correct.)

The Alliance also questioned the absence of a specified rate of increase of force during the test:

> Because S8.1(c)(3) does not specify a linear increase in force (or any other force/time profile), . . . [does] the agency mean to specify a linear increase in force? Or does the agency intend to include an infinite number of force application variations, including increasing the force to just below the full load in less than 1 second, and then holding at that level for the remainder of the 30-second force application time? The results of such a force application would vary significantly from a linear increase in force.

We agree with the Alliance that, as written, this provision would allow the agency to test compliance at a variety of force onset rates and force/time profiles. While we believe that we could legitimately provide for such variation, we are amending S8.1(c)(3) to provide for a more specific rate of force application. Today's document specifies that we will increase the pull force as linearly as practicable, from the pre-load pull force of 500 N to the full force application of 15,000 N in 27 ± 3 seconds, (i.e., not less than 24 seconds and not more than 30 seconds).[12] This means that the compliance test laboratory will be instructed to attempt to increase the force at a constant rate, but that variations due to the limitations of the test equipment or the characteristics of the vehicle will not invalidate the test. Equivalent changes will be made to S11 concerning the rate of force application for testing the lower bars of child restraint anchorage systems.

We are denying petitioner's request that manufacturers be permitted to specify the force application rate because we believe that the force should be applied at a constant rate for as long a time period as possible. This is to assure that the test adequately measures the strength of the anchorage. Metal structures generally can withstand greater forces under a faster rate of application than under a slower one. This means that an anchorage that fails when the required force is reached after 30 seconds might not fail if the required force is reached in a very short period of time. Adopting the petitioner's request could allow the use of weaker anchorages, resulting in a possible reduction in safety. However, we will permit manufacturers who have chosen the option of complying with the Transport Canada requirements to specify the rate of load application during the interim period. Manufacturers have been designing tether anchorages to meet the Canadian requirement and will need time to reassess and possibly reinforce the anchorage to meet the load requirement of our March 1999 final rule when the load is applied over a 27 ±3 second period. We will provide them the needed leadtime, i.e., until September 1, 2001. On or after September 1, 2001, we will achieve the 15,000 N load by increasing the load at an approximately constant rate over a 27 ±3 second period.

The Alliance also refers to a December 30, 1970 NHTSA interpretation letter to Mr. Shuman of International Harvester Company on the force application rate in Standard No. 210 to support petitioner's view that the force application rate in Standard No. 225 is unrealistically long. Petitioner believes that the letter indicates that we believed there is no significant difference between applying the Standard No. 210 force in 0.1 seconds and holding it for 10 seconds and holding the force for 39.9 seconds. Petitioner asks: ''Does the agency now maintain that there is no significant difference between applying peak forces for 1 second and applying peak forces for 30.9 seconds? If so, why does the agency specify unrealistically long force application and hold times?'

The International Harvester letter concerns Standard No. 210's specification that the force applied to seat belt anchorages is applied within 30 seconds, and held at the maximum force level for 10 seconds. The letter enunciates the position that if an anchorage is strong enough to withstand the maximum force level of Standard No. 210 for 10 seconds when the required force is attained in 0.1 seconds, the anchorage will likely be able to withstand the force held at 10 seconds when the force is applied in a constant rate over about 30 seconds. Even if this is correct in the context of Standard No. 210, the same can not be assumed for child restraint tether anchorages. The force applied to these anchorages is held for only 1 second, rather than 10 seconds. Because metal structures can generally withstand greater forces under a faster rate of application than under a slower one, there is a margin of safety incorporated into the load application rate of Standard No. 225 to increase the likelihood that the anchorage will not fail even under the most severe crash conditions.

The Alliance states that S8 specifies that the tether strap attached to the test fixture is permitted too much variation in elongation to objectively test the tether anchorage. The petitioner suggests that a narrow range of elongation be specified, such as between 7 and 9 percent at a force of 11,000 N. We have addressed this concern by amending S8 to provide that a steel cable will be used to attach the SFAD to the tether anchorage. The elongation of a steel cable under load is both minimal and predictable.

The Alliance suggests that a tether hook be used to attach the strap to the tether anchorage, rather than a ''bracket.'' Petitioner states that without an objective bracket specification, manufacturers cannot determine how the device will apply loads along the anchor (e.g., along the entire anchor or concentrated at the center). However, the Alliance states, attempts by vehicle manufacturers to apply test forces specified in the final rule frequently break typical tether hooks. NHTSA has amended S8 to specify use of a tether hook. The hook that we will use will have the same overall dimensions as tether hooks on child restraints, but will be made of high strength steel. Tether hooks are required by S5.9(b) of Standard No. 213 to meet specified configuration and geometry requirements.

With regard to the comment that tether hooks have broken under the test loads specified in the final rule, we note that Transport Canada has conducted tests that have not resulted in such breakage. In recent tensile strength tests performed by Transport Canada, tether hooks were able to sustain much higher loads than the loads expected in the test specified by the final rule. Three hooks from each of four manufacturers were tested to failure by applying a static tensile force at an onset force rate of 135,000 N/s with a target load of 6,500 N and held for a duration of 10 seconds. The average maximum loads observed ranged from 8,870 N to 11,800 N. These loads are substantially higher than the ones specified in the final rule. (These data were presented by Transport Canada at a meeting with manufacturers, importers and interested parties in Ottawa, Ontario, on March 30, 1999. A copy of these data has been placed in the docket for our March 5, 1999 final rule, 98–3390, notice 2.)

The Alliance petitioned for reconsideration of the 125 mm displacement limit specified in S6.3.1(a) and in S6.3.2 for the tether anchorage. As discussed in Section I of this document, the Alliance has stated that 125 mm displacement limit was adopted without providing the public notice of it and an opportunity to

[12] Standard No. 210 does not provide any specific rate of force increase, linear or otherwise. However, as set forth in our Laboratory Test Procedure for Standard No. 210, we have conducted our compliance tests using a linear increase in force over a 25-second period.

comment. We responded to this comment in Section III, *supra*. Further, we believe that the displacement limit is preferable to the alternative that the tether anchorage ''withstand'' the required forces because a displacement limit is far more objective than the latter in determining whether an anchorage met the performance criteria. The petitioner also states that the requirement is unclear:

> It is not clear whether the agency will measure displacement only in the direction of the tether strap, or if the total resultant displacement calculated by combining displacement in all three dimensions is intended. It is also not clear if the reference point for the displacement is to be taken before or after the application of the 500 N pre-load force. It is also unclear whether the maximum displacement is measured under load or after the load is released.

NHTSA has amended S6.3.1 to specify that we will determine the displacement for the tether anchor by measuring the horizontal excursion of point X on the test device. The reference datum for this measurement is where point X is located after preloading the SFAD with a preload force of 500 N. From that datum, the displacement is the total horizontal excursion that point X experiences during the loading. This is consistent with the displacement criterion for the lower anchorages. Standard No. 225 specifies that point X on SFAD 2 must not be displaced more than 125 mm from where point X was after preloading.

The Alliance petitions to amend S6.2 to provide that the location of a tether anchorage is found using the design H-point for a seat position, rather than the actual H-point of the seat. The latter point is determined using a three-dimensional H-point machine (3-Dimensional seating manikin). The petitioner believes that ''[b]ecause of variability in position of the 3-Dimensional Seating Manikin when installed by different individuals and laboratories, the actual H-Point as determined with the Manikin will also vary in location with respect to the 'design H-Point' for that seat position. These variations also occur, in part, because of the poor fit of the Manikin in certain seating positions, and differences in trim materials (e.g., cloth vs. leather). Because of this inherent variability, the NHTSA procedure does not objectively measure the proper position for a tether anchorage.''

We disagree with the petitioner's concerns about the 3-dimensional seating manikin and its use in the standard's test procedure to locate the H-point of a vehicle seating position. We have not encountered variability problems in our tests using the manikin. The manikin is presently used in Federal Motor Vehicle Safety Standard No. 208, ''Occupant Crash Protection'' (49 CFR 571.208), to determine the H-point of a seating position for positioning Hybrid III test dummies (49 CFR part 572, subpart E) in Standard No. 208 crash tests. It is also used in Federal Motor Vehicle Safety Standard No. 214, ''Side Impact Protection'' (49 CFR 571.214), to determine the H-point for positioning side impact test dummies (49 CFR part 572, subpart M). Manufacturer's representatives are usually present during our compliance tests for these standards and are asked to check the dummy's positioning prior to a test. The 3-dimensional seating manikin produces dummy positioning equivalent to that obtained by manufacturers using the device in their own test laboratories. Further, the manikin produces repeatable results when used repeatedly in the same vehicle. We also believe that using the 3-dimensional machine results in an H-point measurement that is more representative of the real world than the H-point obtained through use of the alternative suggested by the Alliance. This is because the 3-dimensional machine compresses the actual seat and provides a more realistic H-point than that achieved on paper using the 2-dimensional template. Further, it should also be noted that the position of the H-point obtained using the 3-dimensional seating manikin is very close to the H-point obtained using the 2-dimensional template. To the extent needed, manufacturers can compensate for and design around the small differences. Because we believe that the 3-dimensional seating manikin yields data that are highly repeatable and reproducible and more realistic than those obtained by the 2-dimensional template, the request to specify the template is denied. (We are, however, specifying that the template may be used during the two-year interim period as part of the option allowing manufacturers to meet Canadian requirements for the tether anchorages. Canada uses the template to determine the location of tether anchorages.)

The Alliance suggests that the tether anchorage test procedure of S8.1(b) be amended by adding an instruction for adjusting the fore-aft position of the rear attaching bars of the test device used to test a tether anchor at a seating position with a child restraint anchorage system (the test device referred to as SFAD 2). We have added the suggested instruction to S8.1(b). Petitioner also suggests that the shape of the SFAD 2 attachments that contact the lower anchor bars be specified because the shape could affect the outcome of the test. We have modified Figure 17 of the standard to show in Detail B that the rear of the slot in the SFAD 2 connecting arms has a diameter of 6.5 mm. The petitioner also suggests that a stiffness specification for SFAD 2 be added as in the draft ISO standard, to ensure that the test fixture is sufficiently strong to withstand the forces in the test. We have added a stiffness specification, from the draft ISO standard, to Figure 17.

Volkswagen (VW) petitioned to change the test device used to test a tether anchor at a seating position that does not have the lower anchorages of a child restraint anchorage system (the test device referred to as SFAD 1). The vehicle's belts are used to attach SFAD 1 to the vehicle seat at the seat bight. A cable is used to attach the top of SFAD 1 to the tether anchorage. VW states that ''[s]ome testing has indicated that the design of the fixture interferes with belt system routing requirements or geometry such that the stiff portion of the buckle sits at the opening of the fixture rather than being inside or outside the opening.'' The petitioner suggests that the SFAD 1 openings for the belt routing be consistent with the fixture in the Society of Automotive Engineers (SAE) Recommended Practice J1819, ''Securing Child Restraint Systems in Motor Vehicle Rear Seats.'' J1819 specifies a common reference tool, a ''Child Restraint System Accommodation Fixture,'' that approximates a child restraint system. Both vehicle and child restraint manufacturers can use the fixture to assess the degree to which their products are compatible.

NHTSA has addressed VW's comment by amending S8.1(b) of the final rule to specify that if SFAD 1 cannot be attached to the vehicle seat using the belts because of the location of the vehicle belt buckle, the vehicle belt will not be used. Instead, SFAD 1 will be attached by material whose breaking strength is equal to or greater than the breaking strength of the webbing for the seat belt assembly installed as original equipment at that seating position. We also specify that the geometry of the attachment must duplicate the geometry, at the pre-load point, of the attachment of the originally installed seat belt assembly. These provisions are essentially the same as those specified in Standard No. 210, ''Seat Belt Assembly Anchorages.'' We believe these provisions address VW's concern, while providing more flexibility to address the problem VW describes than

the approach suggested by VW. Our adopted approach will not affect the outcome of the assessment of the tether anchor's strength.

Toyota suggests amending the provision that states that, for the purpose of testing a tether anchorage at a seating position that has a child restraint anchorage system, place the seat back in its most upright position:

> When the seat back is placed in its most upright position, in some vehicle seats the SFAD 2 cannot attach to the lower anchorages. In the real world, if a CRS [child restraint system] cannot attach to the anchorages, we believe the vehicle owner will adjust the seat back such that the CRS can be attached. Therefore, Toyota requests that the agency amend S7(a) * * * to allow for adjustment of the seat back for cases where the SFAD 2 cannot be attached to the lower anchorages with the seat back in its most upright position.

To address Toyota's concern, we have added a statement to S7(a), which states:

> When SFAD 2 is used in testing and cannot be attached to the lower anchorages with the seat back in this position, adjust the seat back as recommended by the manufacturer in its instructions for attaching child restraints. If no instructions are provided, adjust the seat back to the position that enables SFAD 2 to attach to the lower anchorages that is the closest to the most upright position.

*B. Issues relating to the application of the standard.* Several petitioners ask us to reconsider the application of the standard to certain vehicle types or seating positions, or ask for clarification of the applicability of particular requirements. The Alliance asks that the rule be amended to specify that the requirements of the standard only apply to forward-facing rear designated seating positions, and not to rearward-or side-facing rear seats. The petitioner states that neither of the latter types of seats are recommended for child restraint installation, so the requirement for the installation of child restraint anchorage systems or tether anchorages should not apply to them. The agency agrees and has amended the provisions of S4 of the final rule to make clear that rear-and side-facing seats are not counted in determining the number of required anchorages.

The Alliance asks us to confirm that a convertible that has no rear designated seating position or which has an on-off switch for the passenger air bag will only have to have lower anchorages in the front passenger seating position, and not a tether anchorage. This is partially correct. Vehicles that have no rear designated seating position, and no on-off switch, are generally required to have a tether anchorage at the front passenger seat (see, e.g., S4.4(c)). Convertibles, however, are excluded on practicability grounds from the requirement to have a tether anchorage (S5(a)). Thus, a convertible with no rear designated seating position, and no on-off switch, is not required to have a tether or a child restraint anchorage system in the front passenger seat. Vehicles that have no rear designated seating position but which have an on-off switch are generally required to have a child restraint anchorage system in the front passenger seating position (S5(c)(1)). Again, however, because convertibles are excluded from the requirement to have a tether anchorage (S5(a)), a convertible with no rear designated seating position and an on-off switch is required to have the lower anchorages of a child restraint anchorage system in the front passenger seating position, but is not required to have a tether anchorage at that position. We have added language to S5(c) to clarify these requirements.

Global Vehicle Services, Corporation asks us to clarify the provisions of the standard as they apply to vehicles that have received temporary exemptions under 49 CFR Part 555 from the requirement in Standard No. 208 that an air bag be provided for the front passenger seating position. This and other requests for reconsideration of S5(d)'s prohibition against placing a child restraint anchorage system in an air bag-equipped front passenger seating position will be addressed in the next document we will be publishing in response to the petitions for reconsideration.

The Coalition of Small Volume Automobile Manufacturers, Inc. (Cosvam), asks us to reconsider the requirement that vehicles without any rear designated seating position (and without an air bag on-off switch) must be equipped with a tether anchorage at each front passenger seating position (see, e.g., S4.4(c)). Cosvam asks that we permit manufacturers to label the vehicle as ''unsuitable for child seats'' and exclude so labeled vehicles from requirements to have a tether anchorage. Cosvam said it believes that, because manufacturers know their vehicles better than anyone else, and are ultimately held responsible for issues involving vehicle design and performance, they should be permitted to decide whether the use of a child restraint is appropriate in their vehicles.

NHTSA is denying this request. We are concerned that child restraints could be used in vehicles that do not have rear seating positions, but have air bags at front passenger seating positions. Our rule prohibits the installation of a full child restraint anchorage system at the front seating position if the vehicle does not have an on-off switch. The purpose of this prohibition is to reduce the likelihood that a child restraint system would be used in the front seat. However, because there could be parents who would use the vehicle, notwithstanding the lack of a child restraint anchorage system, to transport their children, we decided to require the installation of a tether anchorage. The provision to which Cosvam objects is primarily for the benefit of toddlers in forward-facing child restraints. In the event the vehicle were used to carry these toddlers, a tether anchorage would help keep the child restraint and the restrained child as far as possible from a deploying air bag. (NHTSA has received a number of telephone calls from owners of vehicles with no rear seat asking for help in installing child restraints in front seats.) A tether anchorage would be very helpful in reducing head excursion toward the dashboard in the event of a crash. Further, although we encourage vehicle manufacturers to fully inform potential buyers of possible incompatibility problems between their vehicles and child restraints, we are concerned that Cosvam's suggestion that the vehicles in question should be permitted to be labeled as not suitable for child restraints may not dissuade some parents from using the vehicle to carry children. Parents do in fact use sports cars to transport children in child restraint systems. NHTSA has received a number of phone calls from owners of sports cars wanting to know which child restraint system fits best in their vehicles. We believe that a tether anchorage should be provided in these vehicles to improve the securement of the child in the event the toddler is transported in the vehicle. Accordingly, this request is denied.

Several petitioners ask us to reconsider the requirement in S9.3, *Adequate fit of the lower anchorages,* that each vehicle and each child restraint anchorage system in that vehicle must be designed such that the child restraint fixture (CRF) specified in the standard can be placed inside the vehicle and attached to the lower anchorages of each child restraint anchorage system. Cosvam argues that this requirement amounts to a ''prohibited design standard,'' and would require the manufacturers of sports cars and similar vehicles to redesign or eliminate rear seats of those vehicles. Cosvam asks us to add a provision to the rule stating that vehicles having rear seats that cannot accommodate the CRF, but lacking an

on-off switch for the air bag, need have neither a tether nor child restraint anchorage system in the rear seat of the vehicle, nor a tether anchorage in the front seating position. In other words, they are excluded from the standard. The petitioner states: ''Manufacturers should be permitted to exclude 'small rear seat vehicles' because they are, from a child restraint point of view, the same as vehicles without rear seats.''

American Honda states in its petition that it can be very difficult or impossible to get the CRF into the rear seating area of some vehicles, such as small two-door cars. The commenter states that the draft ISO standard (which developed the CRF and the procedures for its use) specifies that ''To facilitate installation of the CRF in a vehicle seat, the CRF may be constructed of smaller parts and assembled in the vehicle seat. Alternatively, vehicle components maybe removed to allow access.'' Honda requests that similar language be added to Standard No. 225. Honda also states ''From a practical standpoint, we believe that child restraints will be offered in various sizes, including child restraints that are somewhat smaller than the CRF for use in small vehicles. * * * Thus, if the CRF, in its full shape and size, can be fitted to the lower anchorages, we believe it is not important whether the CRF had to be assembled in place or some vehicle components (e.g., front seat) had to be removed to facilitate getting the CRF into the seat position where the lower anchorage fit was being checked.''

Toyota, in its petition for reconsideration, states that some of the rear seating positions in some carlines can not accommodate the CRF, but are able to accommodate existing child restraints and will be able to accommodate new child restraints that will use the child restraint anchorage system. Toyota suggests that we exclude vehicles that cannot accommodate the CRF, due to a lack of rear seating space, from the fit requirements of S9.3, as long as the lower anchorages that are required to be installed are designed to accommodate the lower anchorages of the CRF.

We are amending S9.3 along the line suggested by Honda and not adopting the suggestions of Cosvam and Toyota. We agree that S9.3 as currently written could result in unnecessary design changes for some vehicles. The CRF is larger than many child restraint systems. Even if the CRF does not fit in a vehicle's rear seat, there will likely be child restraint models that will be small enough to fit. Accordingly, we are amending S9.3 to specify that, to facilitate installation of the CRF in a vehicle seat, the side and top frames of the CRF may be removed in order to place it in the vehicle. To illustrate the CRF with the side and top frames removed, we are adding a Figure 1A to the standard. We believe that this approach responds to Cosvam's and Toyota's concerns about the ability of their vehicles to fit the CRF in the rear seating system and makes it unnecessary to exclude vehicles as these petitioners have requested. We do not believe sufficient information has been provided to justify excluding vehicles with one or two designated rear seating positions from the requirement to provide a child restraint anchorage system at those positions. Some parents may use the vehicle to transport children regardless of a label that tells them that the vehicle is unsuitable for child restraints. (See response, above, to Cosvam's request to label vehicles.) A child restraint anchorage system in rear seating positions will provide benefits to the children using them.

The Alliance asks us to confirm its understanding that the new standard does not apply to tether anchorages and child restraint anchorage systems installed in vehicles not listed in the *Application* section of the standard (S2). That understanding is correct. We had proposed in the NPRM the issuance of a separate standard establishing requirements for the strength and location of tether anchorages, and the application of this standard to any tether anchorage installed in new passenger cars and multipurpose passenger vehicles, trucks and buses (see proposed Standard No. 210b, 62 FR 7885). However, the final rule applies to vehicles listed in the application section of Standard No. 225, and not to anchorages installed in new vehicles. The Alliance is correct that S4.1 of the standard (which requires that each tether anchorage and each child restraint anchorage system installed, either voluntarily or pursuant to Standard No. 225, in any new vehicle manufactured on or after September 1, 1999, shall comply with the configuration, location and strength requirements of the standard) does not limit the voluntary installation of child restraint anchorage systems or tether anchorages in vehicles not listed in S2 of the standard. Although anchorage systems installed in these vehicles will not be subject to the standard's requirements, they will be subject to our defect authority. Manufacturers would therefore have to ensure that the systems are free of safety-related defects. (The agency encourages manufacturers to ensure that anchorage systems installed in vehicles not subject to Standard No. 225 nonetheless voluntarily meet the performance requirements of the standard to ensure that the systems offer adequate crash protection. A parent is likely to assume that such systems meet minimum performance requirements.)

The Alliance, and Ford, in a separate petition, ask NHTSA to clarify S4.1 of the standard to permit what petitioners call ''ISO-compatible anchorage systems.'' The Alliance explains that:

> Installing two child restraint anchorage systems in the two outboard positions of a typical three-passenger rear seat creates a third non-complying ''child restraint anchorage system'' at the center seat position. This anchorage system consists of the tether anchorage and the inboard lower anchors of the two child restraint anchorage systems at the outboard seating positions. This anchorage system sometimes referred to as ISO-compatible, can be used to install child restraints with webbing-based attachment systems, but it does not meet all the technical requirements of the final rule. * * *
>
> S4.1 appears to prohibit installing child restraint anchorage systems at both outboard-seating positions because doing so would create a non-complying voluntary anchorage system at the center seat position. The essential difference between complying anchorage systems and ISO-compatible anchorage systems is that the lateral spacing of anchors is not 280 mm in an ISO-compatible anchorage. Because of non-standard lateral spacing, ISO-compatible anchorage systems cannot be used to install child restraints using rigid attachments. But these ISO-compatible anchorage systems can typically be used to install child restraints equipped with webbing-based round-bar attachments. * * * Because of non-standard spacing, the SFAD 2 cannot be used to test the strength and stiffness of these lower anchors and tether anchor as a system, but the lower anchors would be subject to testing of the anchorage systems for the outboard position. Alliance members would test the center tether anchorage using the SFAD 1 or the 5.3 kN single-strap test.
>
> Some Alliance members had planned to treat these center anchor systems as voluntary, non-standard anchorage systems and to advise customers that these center positions could be used to secure child restraints equipped with webbing-mounted attachments. No Alliance members plan to test these ISO-compatible anchorage systems as a separate system, because all parts of such a system are subject to testing as a tether anchorage or as part of the outboard child restraint anchorage system. * * *
>
> The Alliance petitions the agency to clarify S4.1 to allow voluntary ''ISO-compatible'' systems. Such systems should not be subject to the position and spacing requirements of FMVSS 225, provided the manufacturer provides instructions for the proper installation of child restraints in these positions in the vehicle owner's manual. * * *

Standard No. 225 does not prohibit the installation of these so-called ''ISO-compatible'' anchorage systems. An ISO-compatible system is a system consisting of lower anchorage bars from adjacent, properly-designed, child restraint anchorage systems. We do not consider an ISO-compatible anchorage system to be a ''child restraint anchorage system'' under Standard No. 225, because it does not have lower anchorages of its own. The strength of the tether anchorage of the ISO-compatible system will be tested using the SFAD 1 (attached by the vehicle's belt system at the seating position where the ISO-compatible system is located), or the single-strap (until 2004, see S6.3.2).

The National Truck Equipment Association (NTEA) asks us to exclude shuttle-type buses from the standard. Petitioner states that these vehicles are most often used as hotel or rental car shuttle vehicles and as paratransit vehicles. Petitioner believes that these vehicles should be excluded because almost all of the seats in them are side-facing, and ''[w]e don't know that it is appropriate for child restraint seats to be placed in a side-facing seat.'' NTEA also states that the only forward-facing passenger seats in these vehicles is often the rear bench, which is placed against the back wall of the vehicle. Petitioner believes that there is no practicable method of anchoring the tether strap.

We agree that it is unlikely that child restraints will be used in shuttle type buses (with side-facing seats along the side perimeter walls of the passenger compartment and whose only forward facing seating positions in the passenger compartment are those along the rear wall of the bus). These buses also have limited use geographically, moving people relatively short distances. A tether anchorage may also be more costly to install in the rear row of these buses, given the proximity of the rear bench to the rear wall of the vehicle. In view of these factors, the combination of higher costs and much lower usage probably makes application of the standard not cost beneficial. We are thus excluding ''shuttle buses'' from the standard. A definition of shuttle bus is added to the standard to read as follows: *Shuttle bus* means a bus with only one row of forward-facing seating positions rearward of the driver's seat.

*C. Written instructions.* The Alliance and Porsche Cars North America petitioned to delete S12 of the standard, which requires vehicle manufacturers to provide written instructions for using the tether anchorage and the child restraint anchorage system in the vehicle. Included among the required instructions are those that provide ''a step-by-step procedure, including diagrams, for properly attaching a child restraint system to the tether anchorages and the child restraint anchorage system.'' The Alliance states that S12 requires

> too much detail for a vehicle owner's manual because of the great variety of possible child restraint attachments on the market, even if the vehicle manufacturer could know in advance, before the publication of its owner's manual, the details regarding each child restraint attachment likely to be offered during the vehicle's anticipated period of useful service. Obviously, no manufacturer will have such knowledge.

General instructions on using a child restraint anchorage system are required by the introductory paragraph of S12. Instructions on using the child restraint anchorage system will help increase the likelihood that a child restraint anchorage system and a tether anchorage would be properly used. However, the agency recognizes that it may be difficult for vehicle manufacturers to anticipate how child restraint manufacturers will design the components that attach to the lower anchorage bars of a child restraint anchorage system. With these considerations in mind, we have amended S12(c) to delete the requirement for detailed instructions on attaching a child restraint to a child restraint anchorage system. However, detailed instructions on attaching a tether strap to the tether anchorage will still be required. This requirement is being retained because the child restraint standard (Standard No. 213) specifies the configuration and geometry of the tether hook. Vehicle manufacturers, therefore, can develop their written instructions with the tether hook design in mind. We have also declined to delete S12 entirely, because S12(a) and (b) will help parents identify which seating positions have the child restraint anchorage systems, how to access the anchorages if they are covered, and how to interpret the marks required by S9.5(a) of the standard. This information will help increase the likelihood that the anchorages will be properly used.

*b. Requirements for Child Restraints Relating to September 1, 1999 Compliance Date*

1. Audible or Visual Indication of Attachment

Kolcraft Enterprises petitioned for reconsideration asking NHTSA to clarify or reconsider S5.9(d) of the final rule. That section requires each child restraint system, other than a system with hooks for attaching to the lower anchorages of the child restraint anchorage system, to provide either an audible indication when each attachment to the lower anchorages becomes fully latched or attached, or a visual indication that all attachments to the lower anchorages are fully latched or attached. Visual indications shall be detectable under normal daylight lighting conditions.

Kolcraft states that:

> While this provision makes sense after September 1, 2002 when each new child restraint must be equipped with lower anchorage attachment components, compliance with the provision is impracticable in advance of that date (except for child restraints that are voluntarily equipped with lower anchorage attachment components in advance of the regulatory deadline). Yet, it appears that Section 5.9(d) takes effect for all child restraints manufactured on or after September 1, 1999, because the provision does not explicitly specify a later effective date.

NHTSA did not intend to imply that child restraints that do not have the means for attaching to the lower bars of a vehicle's child restraint anchorage system must provide the audible or visual indicators described in S5.9(d). Such a requirement does not make sense for child restraints that do not have the attachments. For a child restraint that has such attachments, the audible or visual indicators would be needed to better ensure that parents properly latch the attachments. Accordingly, we have revised S5.9(d) to make clear that it applies only to child restraints with components that enable the restraints to be securely fastened to the lower anchorages of a child restraint anchorage system (other than child restraints with hooks for attaching to the lower anchorages).

2. Attachments Must be Permanent

Indiana Mills & Manufacturing (IMMI) has petitioned us to reconsider the requirement in S5.9(a) of Standard No. 213 that each child restraint system must have the components that attach to the lower bars of a child restraint anchorage system permanently attached to the child restraint. We are denying this petition.

IMMI states that it believes that almost all child restraint manufacturers will use a snap hook (on a strap) to fasten the child restraint system to the lower bars. IMMI believes that ''a snap hook and adjuster is virtually impossible to release when excessively tightened.'' To overcome this perceived problem, petitioner wishes to put a seat belt type push-button buckle on the webbing strap that connects to the snap

hook. A latch plate would be permanently welded on to the child restraint to couple with and unbuckle from the buckle on the snap hook strap.

This design would not meet S5.9(a) of Standard No. 213 because the snap hook is not permanently attached to the child restraint. While IMMI believes that the design would make it easier to unfasten a child restraint from the lower bars, we are concerned about the likelihood that some parents will lose the non-permanent piece, which will render them unable to use the child restraint anchorage system. In the NPRM for the March 5, 1999 final rule, we raised the issue of whether a final rule should encompass a scheme whereby a non-permanent piece (similar to IMMI's webbing piece with the snap hook on one end and buckle on the other) could be provided to consumers by vehicle manufacturers to enable parents to adapt a child restraint anchorage system for use with child restraints not originally made for such a system. Commenters overwhelmingly opposed an adapter, believing that the adapter would be lost or misused by consumers. (This issue is discussed in the final rule at 64 FR 10798–10799.) Because of those comments, we decided to mandate a single child restraint anchorage system, and to require in S5.9(a) of Standard No. 213 that the components that attach to the lower bars must be permanently attached to the child restraint. With IMMI's system, some parents might forget or lose the snap hook piece, and would not be able to attach the child restraint to the anchorage system. We continue to believe that the ''permanently attached'' requirement serves a safety need by increasing the likelihood that the components will be present when the child restraint needs to be installed in a child restraint anchorage system.

With regard to IMMI's belief that excessively tightened snap hooks will be virtually impossible to release, the March 1999 final rule added a requirement to Standard No. 213 that the belt webbing has to be adjustable so that the child restraint can be tightly attached to the vehicle (S5.9(d)). We believe that most, if not all adjusters will also be capable of releasing the tension of the belt so that the snap hook can be easily unfastened. If we were to find that parents are having difficult releasing snap hooks, we will consider rulemaking possibly to require a release mechanism that will facilitate the easy release of highly tightened snap hooks.

Ford states in its petition that although it supports the intent of the requirement in S5.9(a) that components must be ''permanently attached,'' Ford believes that the meaning of what constitutes permanently attached needs to be clarified. Ford states on page 8:

> Are existing child restraint belt harnesses ''permanently attached,'' even though they can be removed for repositioning? For example, is a buckle and crotch strap assembly ''permanently attached'' if it can be removed for relocation to an alternate position that is further forward? Are belts on a hybrid harness booster that are designed to be removed when the restraint is converted into a belt-positioning booster ''permanently attached?'' Can lower anchor attachments be removable so they can be relocated to different positions depending on whether the child restraint is being used rear-or forward-facing? Because attachment to lower anchors is not appropriate for belt-positioning boosters, it would be appropriate to allow lower anchor attachments to be removed from harness boosters when they are converted into belt-positioning boosters.

We have granted this part of the petition to clarify the meaning of permanently attached. For maximum design flexibility in designing the components on child restraints that attach to the lower bars, child restraint manufacturers might want consumers to move or remove the components that attach to the lower bars. Opposed to this is the interest in ensuring that the components are present on child restraints when needed. To balance these concerns, we have amended S5.9(a) to add a sentence that ''The components must be attached such that they can only be removed by use of a tool, such as a screwdriver.'' We believe that this provision will permit child restraint manufacturers some design flexibility, yet will limit how easily the components can be removed. Limiting easy removal of the components will increase the likelihood that components are in place when needed.

*c. Reasons for the Effective Date of This Rule*

Section 30111(d) of our motor vehicle safety statute (Title 49 U.S.C. Chapter 301) requires that a safety standard may not become effective before the 180th day after the standard is prescribed or later than one year after it is prescribed, unless we find, for good cause shown, that a different effective date is in the public interest and publish the reasons for the finding. The effective date for this final rule is September 1, 1999, which is the same effective date as for the March 1999 final rule which today's rule amends. Today's rule does not impose new requirements on manufacturers but permits them to begin meeting, at the manufacturer's option, alternative strength requirements for an interim period. This rule also clarifies test procedures specified in the March 1999 final rule. Because today's rule provides an alternative to manufacturers which they may begin meeting in lieu of the requirements which come into effect September 1, 1999, and clarifies test requirements that come into effect September 1, it is in the public interest for the effective dates for today's rule to be the same as that of the March 1999 rule: September 1, 1999.

## IV. Corrections to Final Rule

This document makes the following corrections to the March 1999 final rule which have been brought to our attention by petitioners and by other parties:

- Standard No. 213 is amended by correcting the table to S5.1.3.1(a) to show that backless booster seats are excluded from the new 720 mm head excursion limit. These seats were excluded because, as discussed in the preamble, the manufacturers of backless booster seats may have practicability problems in meeting the requirement. In addition, S5.9(a) of the standard is corrected to specify that for rear-facing child restraints with detachable bases, only the base need have the permanently attached components that enable the restraint to be securely fastened to the lower bars of a child restraint anchorages system (as opposed to requiring the components on both the base and the restraint system itself). The agency intended to specify this limitation in Standard No. 213 (see 64 FR at 10806–10807), but did not do so in the regulatory text of the final rule.
- Figures 1B and 1B′ of Standard No. 213 are corrected by revising some of the dimensions for the test assembly.
- Paragraph S4.1 of Standard No. 225 is corrected to specify that voluntarily-installed lower bars must meet marking requirements along with configuration, location and strength requirements of the standard. We stated in the preamble to the final rule that we were specifying marking requirements: ''The agency has drafted this final rule to apply the standard's configuration, location, strength and marking requirements to any additional voluntarily-installed rigid bar anchorage system installed on a new school bus, or on any other vehicle.'' (64 FR at 10803, column 2.) However, we inadvertently did not refer to marking requirements in S4.1.
- S9.4.1 of Standard No. 225 is corrected by adding a tolerance for defining the vertical longitudinal plane for the forward direction force. The tolerance is from the draft ISO standard. In addition, we added S9.4.1.1 to specify the vertical angles for the forward and lateral direction forces. The

specified angles are also from the draft ISO standard.

- S11(a) and (b) of Standard No. 225 are corrected by adding a 135 N rearward force to remove slack or tension to the device prior to its loading. The specified force is from the draft ISO standard.
- The following figures in Standard No. 225 are corrected: Figure 1 (added yaw/pitch/roll); Figure 2 (added mass of CRF and corrected dimensions on top view); Figures 3 to 11 (darkened shading); Figure 15 and 16 (corrected dimension that Transport Canada also has on top view); Figure 17 (added 6.5 mm diameter on detail B, deleted point Y on detail A, corrected 270 dimension on side view and added stiffness details to side and back views and to note 5); Figure 18 (made force application attachment as in Figure 17); and Figure 19 (degree sign).

## V. Rulemaking Analyses and Notices

*a. Executive Order 12866 (Regulatory Planning and Review) and DOT Regulatory Policies and Procedures*

This rulemaking document was not reviewed under E.O. 12866, ''Regulatory Planning and Review.'' We have considered the impacts of this rulemaking action and have determined that this action is not ''significant'' within the meaning of the Department of Transportation's regulatory policies and procedures. We have further determined that the effects of this rulemaking are sufficiently minimal that preparation of a full preliminary regulatory evaluation is not warranted. We believe that manufacturers will be minimally affected by this rulemaking because it does not change manufacturers' responsibilities to begin installing tether anchorages and the lower bars of child restraint anchorage systems on the compliance dates of the March 5, 1999 final rule. The rule instead permits manufacturers to begin meeting, at the manufacturer's option, alterative strength requirements for an interim period. We believe there will be no additional testing costs associated with this final rule. This rule clarifies testing requirements but does not impose new test burdens. The method of testing tether anchorages and the lower bars of child restraint anchorage systems will be basically the same as they are under the March 1999 final rule. Further, since the amendment is permissive in nature, there are no costs associated with it.

*b. Regulatory Flexibility Act*

NHTSA has considered the effects of this rulemaking action under the Regulatory Flexibility Act. I hereby certify that it will not have a significant economic impact on a substantial number of small entities. This rule affects motor vehicle manufacturers, almost all of which are not small business. Even if there are motor vehicle manufacturers that qualify as small entities, this rule will not have a significant economic impact on them because these amendments are generally permissive in nature, and have no costs associated with it. Accordingly, the agency has not prepared a regulatory flexibility analysis.

*c. Executive Order 12612 (Federalism)*

This rulemaking action has been analyzed in accordance with the principles and criteria contained in Executive Order 12612, and the agency has determined that this rule does not have sufficient federalism implications to warrant the preparation of a Federalism Assessment.

*d. Unfunded Mandates Reform Act*

The Unfunded Mandates Reform Act of 1995 (Public Law 104–4) requires agencies to prepare a written assessment of the costs, benefits and other effects of proposed or final rules that include a Federal mandate likely to result in the expenditure by State, local or tribal governments, in the aggregate, or by the private sector, of more than $100 million annually. This rule does not impose any unfunded mandates as defined by that Act.

*e. National Technology Transfer and Advancement Act*

Under the National Technology Transfer and Advancement Act of 1995 (NTTAA)(Public Law 104–113), ''all Federal agencies and departments shall use technical standards that are developed or adopted by voluntary consensus standards bodies, using such technical standards as a means to carry out policy objectives or activities determined by the agencies and departments.'' This final rule permits manufacturers to meet the specifications in the draft ISO standard for child restraint anchorage systems during an interim period, as an alternative to meeting the requirements of the March 1999 final rule. The International Organization for Standardization (ISO) is a worldwide voluntary federation of ISO member bodies. By permitting the alternative in the short run, this rule is consistent with the NTTAA's goals of encouraging long-term growth for U.S. enterprises and promoting efficiency and economic competition through harmonization of standards.

*f. National Environmental Policy Act*

NHTSA has analyzed this rulemaking action for the purposes of the National Environmental Policy Act. The agency has determined that implementation of this action will not have any significant impact on the quality of the human environment.

*g. Executive Order 12778 (Civil Justice Reform)*

This rule does not have any retroactive effect. Under section 49 U.S.C. 30103, whenever a Federal motor vehicle safety standard is in effect, a state may not adopt or maintain a safety standard applicable to the same aspect of performance which is not identical to the Federal standard, except to the extent that the state requirement imposes a higher level of performance and applies only to vehicles procured for the State's use. 49 U.S.C. 30161 sets forth a procedure for judicial review of final rules establishing, amending or revoking Federal motor vehicle safety standards. That section does not require submission of a petition for reconsideration or other administrative proceedings before parties may file suit in court.

*h. Paperwork Reduction Act.*

This rule does not contain any collection of information requirements requiring review under the Paperwork Reduction Act of 1995 (Public Law 104–13). We noted in the March 1999 final rule that the phase-in production reporting requirements described in that rule are considered to be information collection requirements as defined by the Office of Management and Budget (OMB) in 5 CFR part 1320. NHTSA will be submitting a clearance request to OMB for review and clearance in the near future. The agency notes that the clearance for the information collection requirements of Standard 213, ''Child Restraint Systems,'' will expire September 1, 2000 (OMB Clearance No. 2127–0511). NHTSA anticipates it will submit a request to OMB to renew the clearance of that standard and, at or near the same time, will be submitting an information collection request to OMB for review and clearance of the information collections in the March 1999 final rule.

Pursuant to the Paperwork Reduction Act and OMB's regulations at 5 CFR section 1320.5(b)(2), NHTSA informs the potential persons who are to respond to the collection of information that such persons are not required to respond to the collection of information unless it displays a currently valid OMB control number. The agency's current

OMB control numbers are displayed in NHTSA's regulations at 49 CFR Part 509, *OMB Control Numbers for Information Collection Requirements*.

**List of Subjects in 49 CFR Part 571**

Imports, Incorporation by reference, Motor vehicle safety, Reporting and recordkeeping requirements, Tires.

In consideration of the foregoing, NHTSA amends 49 CFR Chapter V as set forth below.

## PART 571—FEDERAL MOTOR VEHICLE SAFETY STANDARDS

1. The authority citation for Part 571 is revised to read as follows:

**Authority:** 49 U.S.C. 322, 30111, 30115, 30166 and 30177; delegation of authority at 49 CFR 1.50.

2. In § 571.213—

a. S5.1.3.1 as amended at 64 FR 10815, effective September 1, 1999, is amended by revising ''Table to S5.1.3.1(A)—Add-On Forward-Facing Child Restraints'';

b. S5.9(a) and (d) are revised; and

c. Figure 1B and Figure 1B′, as amended at 64 FR 10820, effective September 1, 1999, are revised.

The revised text reads as follows:

**§ 571.213 Standard No. 213; Child restraint systems.**

* * * * *

BILLING CODE 4910–59–P

**Table to S5.1.3.1(a) - Add-On Forward-Facing Child Restraints**

| When this type of child restraint | is tested in accordance with-- | these excursion limits apply | *Explanatory note*: In the test specified in 2nd column, the child restraint is attached to the test seat assembly in the manner described below, subject to certain conditions |
|---|---|---|---|
| Harnesses, backless booster seats and restraints designed for use by physically handicapped children | S6.1.2(a)(1)(i)(A) | Head 813 mm; Knee 915 mm | Attached with lap belt; in addition, if a tether is provided, it is attached |
| Belt-positioning seats | S6.1.2(a)(1)(ii) | Head 813 mm; Knee 915 mm | Attached with lap and shoulder belt; no tether is attached |
| All other child restraints, manufactured before September 1, 1999 | S6.1.2(a)(1)(i)(B) | Head 813 mm; Knee 915 mm | Attached with lap belt; no tether is attached |
| All other child restraints, manufactured on or after September 1, 1999 | S6.1.2(a)(1)(i)(B) | Head 813 mm; Knee 915 mm | Attached with lap belt; no tether is attached |
| | S6.1.2(a)(1)(i)(D) (beginning September 1, 2002) | | Attached to lower anchorages of child restraint anchorage system; no tether is attached |
| | S6.1.2(a)(1)(i)(A) | Head 720 mm; Knee 915 mm | Attached with lap belt; in addition, if a tether is provided, it is attached |
| | S6.1.2(a)(1)(i)(C) (beginning September 1, 2002) | | Attached to lower anchorages of child restraint anchorage system; in addition, if a tether is provided, it is attached |

BILLING CODE 4910–59–C

* * * * *

S5.9 *Attachment to child restraint anchorage system.*

(a) Each add-on child restraint system manufactured on or after September 1, 2002, other than a car bed, harness and belt-positioning seat, shall have components permanently attached to the system that enable the restraint to be securely fastened to the lower anchorages of the child restraint anchorage system specified in Standard No. 225 (§ 571.225) and depicted in Drawing Package 100–1000 with Addendum A: Seat Base Weldment (consisting of drawings and a bill of materials) dated October 23, 1998, (incorporated by reference; see § 571.5). The components must be attached such that they can only be removed by use of a tool, such as a screwdriver. In the case of rear-facing child restraints with detachable bases, only the base is required to have the components.

* * * * *

(d) Beginning September 1, 1999, each child restraint system with components that enable the restraint to be securely fastened to the lower anchorages of a child restraint anchorage system, other than a system with hooks for attaching to the lower anchorages, shall provide either an indication when each attachment to the lower anchorages becomes fully latched or attached, or a visual indication that all attachments to the lower anchorages are fully latched or attached. Visual indications shall be detectable under normal daylight lighting conditions.

* * * * *

BILLING CODE 4910–59–P

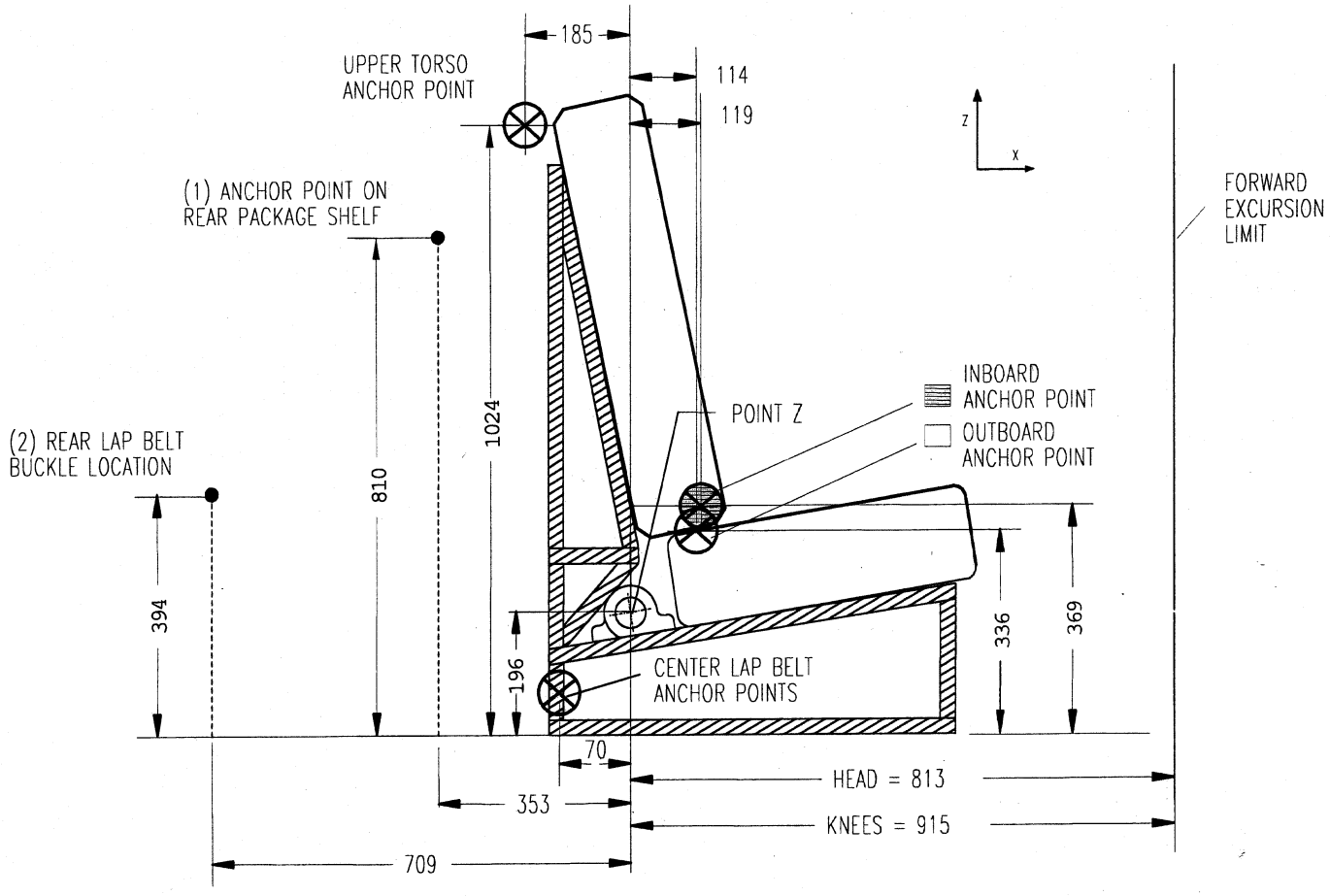


NOTES:
(1) Anchor Point on Rear Package Shelf Located 544 mm Right or Left of the Center SORL as shown in Fig. 1A
(2) Rear Lap Belt Buckle Located 178 mm Right or Left of the Center SORL as shown in Fig. 1A

METRIC (mm)
NOT TO SCALE

**LOCATION OF BELT ANCHORAGE POINTS AND FORWARD EXCURSION LIMITS ON THE STANDARD SEAT ASSEMBLY**

**Figure 1B**

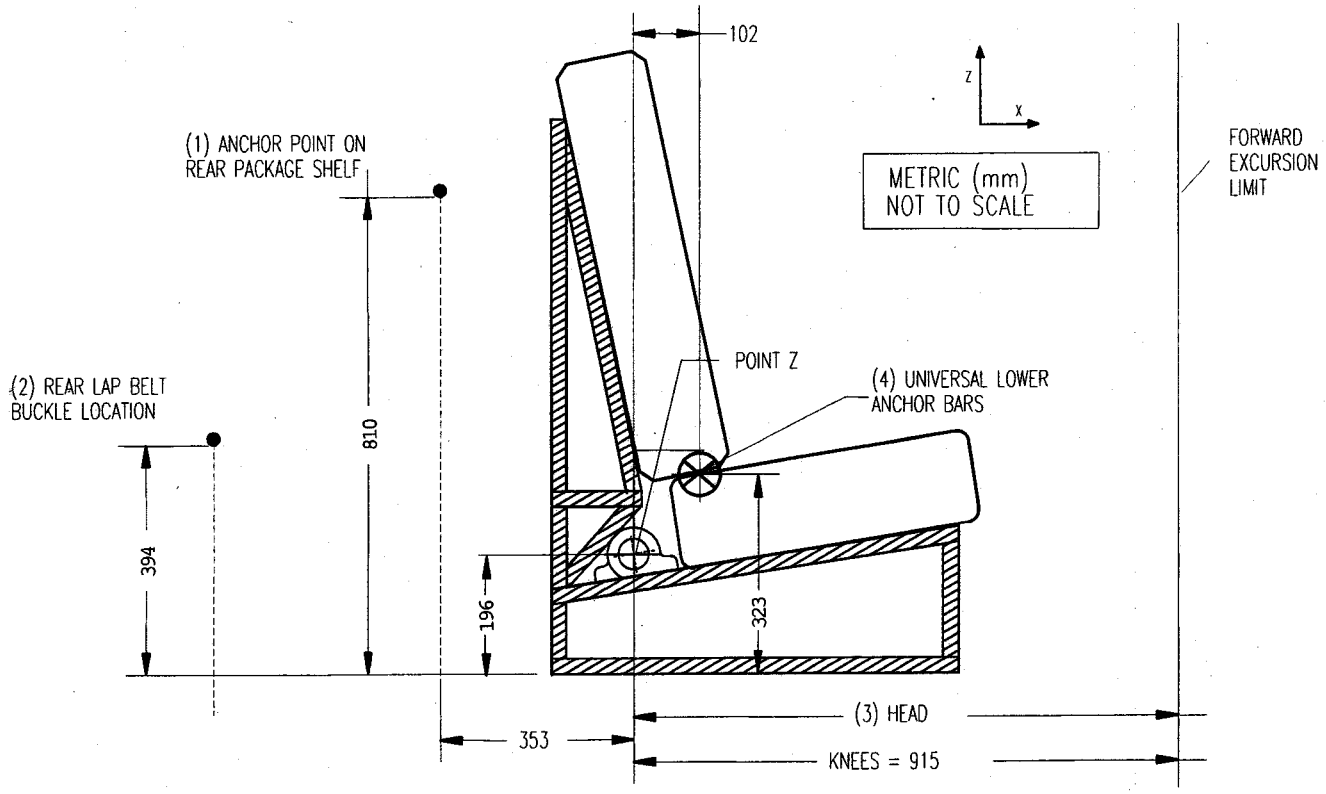


NOTES:
(1) Anchor Point on Rear Package Shelf Located 544 mm Right or Left of the Center SORL as shown in Fig. 1A'
(2) Rear Lap Belt Buckle Located 178 mm Right or Left of the Center SORL as shown in Fig. 1A'
(3) Head Excursion Limit is: (i) 720 mm with Tether Attached and (ii) 813 mm with Tether Unattached
(4) Universal Lower Anchor Bars Located 102 mm Forward of Pt Z and 279 mm Upward from Floor

**LOCATION OF UNIVERSAL CHILD RESTRAINT ANCHORAGE SYSTEM AND FORWARD EXCURSION LIMITS FOR THE STANDARD SEAT ASSEMBLY**
**Figure 1B'**

BILLING CODE 4910–59–C

3. Section 571.225 is amended by:

a. Revising S2, and by amending S3 by adding, in alphabetical order, a definition for ''Seat bight'' and for ''Shuttle bus';

b. Revising S4.1, S4.2(a), S4.2(b), S4.2(c), S4.3(a)(1), S4.3(a)(2), S4.3(b)(1), S4.3(b)(2), S4.3(b)(3), S4.4(a), S4.4(a)(1), S4.4(a)(2), S4.4(b), and S4.4(c);

c. Adding S4.5;

d. Revising S5(c)(1)(ii) and (c)(2) in its entirety;

e. By designating the text of S6.2 as S6.2.1 and revising the introductory text, and adding new text to S6.2 and new S6.2.2, S6.2.2.1 and S6.2.2.2;

f. Adding text to S6.3, revising S6.3.1 in its entirety, and adding S6.3.4 and S6.3.4.1 through S6.3.4.4;

g. Revising S7(a), S8, S8.1, and the introductory paragraph of S8.2;

h. Amending S9 by adding text following the heading of S9;

i. Revising S9.1.1(a) and S9.1.1(f); and adding S9.3(c);

j. Revising the introductory paragraph of S9.4.1 and revising S9.4.1(a), and adding S9.4.1.1;

k. Revising S11(a), S11(b), S12(b) and S12(c);

l. Adding S15, S15.1, S15.1.1, S15.1.2, S15.1.2.1, S15.1.2.2, S15.2, S15.2.1, S15.2.2, S15.3, S15.3.1, S15.3.2, S15.3.3 and S15.3.4;

m. Revising Figures 1 through 11, and Figures 15 through 19; and

n. Adding a Figure 1A between Figures 1 and 2.

The revised and added text and figures read as follows:

**§ 571.225 Standard No. 225; Child restraint anchorage systems.**

* * * * *

S2. *Application.* This standard applies to passenger cars; to trucks and multipurpose passenger vehicles with a gross vehicle weight rating (GVWR) of 3,855 kilograms (8,500 pounds) or less, except walk-in van-type vehicles and vehicles manufactured to be sold exclusively to the U.S. Postal Service; and to buses (including school buses) with a GVWR of 4,536 kg (10,000 lb) or less, except shuttle buses.

* * * * *

S3. Definitions.

* * * * *

*Seat bight* means the area close to and including the intersection of the surfaces of the vehicle seat cushion and the seat back.

*Shuttle bus* means a bus with only one row of forward-facing seating positions rearward of the driver's seat.

* * * * *

S4.1 Each tether anchorage and each child restraint anchorage system installed, either voluntarily or pursuant to this standard, in any new vehicle manufactured on or after September 1, 1999, shall comply with the configuration, location, marking and strength requirements of this standard. The vehicle shall be delivered with written information, in English, on how to appropriately use those anchorages and systems.

S4.2 * * *

(a) Each vehicle with three or more forward-facing rear designated seating positions shall be equipped with a tether anchorage conforming to the requirements of S6 at no fewer than three forward-facing rear designated seating positions. The tether anchorage of a child restraint anchorage system may count towards the three required tether anchorages. In each vehicle with a forward-facing rear designated seating position other than an outboard designated seating position, at least one tether anchorage (with or without the lower anchorages of a child restraint anchorage system) shall be at such a designated seating position. In a vehicle with three or more rows of seating positions, at least one of the tether anchorages (with or without the lower anchorages of a child restraint anchorage system) shall be installed at a forward-facing seating position in the second row if such a forward-facing seating position is available in that row.

(b) Each vehicle with not more than two forward-facing rear designated seating positions shall be equipped with a tether anchorage conforming to the requirements of S6 at each forward-facing rear designated seating position. The tether anchorage of a child restraint anchorage system may count toward the required tether anchorages.

(c) Each vehicle without any forward-facing rear designated seating position shall be equipped with a tether anchorage conforming to the requirements of S6 at each front forward-facing passenger seating position.

S4.3 * * *

(a) * * *

(1) Each vehicle with three or more forward-facing rear designated seating positions shall be equipped with a child restraint anchorage system conforming to the requirements of S9 at not fewer than two forward-facing rear designated seating positions. In a vehicle with three or more rows of seating positions, at least one of the child restraint anchorage systems shall be at a forward-facing seating position in the second row if such a forward-facing seating position is available in that row.

(2) Each vehicle with not more than two forward-facing rear designated seating positions shall be equipped with a child restraint anchorage system conforming to the requirements of S9 at each forward-facing rear designated seating position.

(b) * * *

(1) Each vehicle with three or more forward-facing rear designated seating positions shall be equipped with a tether anchorage conforming to the requirements of S6 at no fewer than three forward-facing rear designated seating positions. The tether anchorage of a child restraint anchorage system may count towards the three required tether anchorages. In each vehicle with a forward-facing rear designated seating position other than an outboard designated seating position, at least one tether anchorage (with or without the lower anchorages of a child restraint anchorage system) shall be at such a designated seating position. In a vehicle with three or more rows of seating positions, at least one of the tether anchorages (with or without the lower anchorages of a child restraint anchorage system) shall be installed at a forward-facing seating position in the second row if such a forward-facing seating position is available in that row.

(2) Each vehicle with not more than two forward-facing rear designated seating positions shall be equipped with a tether anchorage conforming to the requirements of S6 at each forward-facing rear designated seating position. The tether anchorage of a child restraint anchorage system may count toward the required tether anchorages.

(3) Each vehicle without any forward-facing rear designated seating position shall be equipped with a tether anchorage conforming to the requirements of S6 at each front passenger seating position.

S4.4 * * *

(a) Each vehicle with three or more forward-facing rear designated seating positions shall be equipped as specified in S4.4(a)(1) and (2).

(1) Each vehicle shall be equipped with a child restraint anchorage system conforming to the requirements of S9 at not fewer than two forward-facing rear designated seating positions. At least one of the child restraint anchorage systems shall be installed at a forward-facing seating position in the second row in each vehicle that has three or more rows, if such a forward-facing seating position is available in that row.

(2) Each vehicle shall be equipped with a tether anchorage conforming to the requirements of S6 at a third forward-facing rear designated seating position. The tether anchorage of a child

restraint anchorage system may count towards the third required tether anchorage. In each vehicle with a forward-facing rear designated seating position other than an outboard designated seating position, at least one tether anchorage (with or without the lower anchorages of a child restraint anchorage system) shall be at such a designated seating position.

(b) Each vehicle with not more than two forward-facing rear designated seating positions shall be equipped with a child restraint anchorage system conforming to the requirements of S9 at each forward-facing rear designated seating position.

(c) Each vehicle without any forward-facing rear designated seating position shall be equipped with a tether anchorage conforming to the requirements of S6 at each front forward-facing passenger seating position.

S4.5 As an alternative to complying with the requirements of S4.2 through S4.4 that specify the number of tether anchorages that are required in a vehicle and the designated seating positions for which tether anchorages must be provided, a vehicle manufactured from September 1, 1999 to August 31, 2001 may, at the manufacturer's option (with said option irrevocably selected prior to, or at the time of, certification of the vehicle), meet the requirements of this S4.5. This alternative ceases to be available on and after September 1, 2001. A tether anchorage conforming to the requirements of S6 shall be installed—

(a) for each designated seating position, other than that of the driver, in a vehicle that has only one row of designated seating positions;

(b) for each forward-facing designated seating position in the second row of seating positions in a passenger car or truck;

(c) for each of any two forward-facing designated seating positions in the second row of seating positions in a multipurpose passenger vehicle that has five or fewer designated seating positions; and,

(d) for each of any three forward-facing designated seating positions that are located to the rear of the first row of designated seating positions in a multipurpose passenger vehicle that has six or more designated seating positions.

* * * * *

S5. *General exceptions.*

* * * * *

(c)(1) * * *

(ii) Has an air bag on-off switch meeting the requirements of S4.5.4 of Standard No. 208 (§ 571.208), shall have a child restraint anchorage system for a designated passenger seating position in the front seat, instead of only a tether anchorage. In the case of convertibles, the front designated passenger seating position need have only the two lower anchorages meeting the requirements of S9 of this standard.

(2) Each vehicle that—

(i) Has a rear designated seating position and meets the conditions in S4.5.4.1(b) of Standard No. 208 (§ 571.208); and,

(ii) Has an air bag on-off switch meeting the requirements of S4.5.4 of Standard 208 (§ 571.208), shall have a child restraint anchorage system for a designated passenger seating position in the front seat, instead of a child restraint anchorage system that is required for the rear seat. In the case of convertibles, the front designated passenger seating position need have only the two lower anchorages meeting the requirements of S9 of this standard.

* * * * *

S6.2 *Location of the tether anchorage.* A vehicle manufactured from September 1, 1999 to August 31, 2001 may, at the manufacturer's option (with said option irrevocably selected prior to, or at the time of, certification of the vehicle), meet the requirements of S6.2.1 or S6.2.2. Vehicles manufactured on or after September 1, 2001 must meet the requirements of S6.2.1 of this standard.

S6.2.1 Subject to S6.2.1.1 and S6.2.1.2, the part of each tether anchorage that attaches to a tether hook shall be located within the shaded zone shown in Figures 3 to 7 of this standard of the designated seating position for which it is installed, such that—

* * * * *

S6.2.2 Subject to S6.2.2.1 and S6.2.2.2, the portion of each user-ready tether anchorage that is designed to bind with a tether strap hook shall be located within the shaded zone shown in Figures 3 to 7 of this standard of the designated seating position for which it is installed, with reference to the H-point of a template described in section 3.1 of SAE Standard J826 (June 1992) (incorporation by reference; see § 571.5), if:

(a) the H-point of the template is located—

(1) At the unique Design H-point of the designated seating position, as defined in section 2.2.11.1 of SAE Recommended Practice J1100 (June 1993) (incorporation by reference; see § 571.5), at the full downward and full rearward position of the seat, or—

(2) In the case of a designated seating position that has a means of affixing the lower portion of a child restraint system to the vehicle, other than a vehicle seat belt, midway between the two lower restraint system anchorages;

(b) the torso line of the template is at the same angle to the transverse vertical plane as the vehicle seat back with the seat adjusted to its full rearward and full downward position and the seat back in its most upright position; and

(c) the template is positioned in the vertical longitudinal plane that contains the H-point of the template.

S6.2.2.1 Until September 1, 2001, the portion of each user-ready tether anchorage that is designed to bind with the tether strap hook may be located in a passenger car or multipurpose passenger vehicle within the shaded zone shown in Figures 8 to 11 of the designated seating position for which it is installed, with reference to the shoulder reference point of a template described in section 3.1 of SAE Standard J826 (June 1992) (incorporation by reference; see § 571.5), if:

(a) the H-point of the template is located—

(1) at the unique Design H-point of the designated seating position, as defined in section 2.2.11.1 of SAE Recommended Practice J1100 (June 1993) (incorporation by reference; see § 571.5), at the full downward and full rearward position of the seat, or—

(2) in the case of a designated seating position that has a means of affixing the lower portion of a child restraint system to the vehicle, other than a vehicle seat belt, midway between the two lower restraint system anchorages;

(b) the torso line of the template is at the same angle to the vertical plane as the vehicle seat back with the seat adjusted to its full rearward and full downward position and the seat back in its most upright position; and

(c) the template is positioned in the vertical longitudinal plane that contains the H-point of the template.

S6.2.2.2 The portion of a user-ready tether anchorage in a vehicle that is designed to bind with the tether strap hook may be located outside the shaded zone referred to in S6.2.2, if no part of the shaded zone is accessible without removing a seating component of the vehicle and the vehicle is equipped with a routing device that—

(a) ensures that the tether strap functions as if the portion of the anchorage designed to bind with the tether strap hook were located within the shaded zone;

(b) is at least 65 mm behind the torso line, in the case of a non-rigid-webbing-type routing device or a deployable routing device, or at least 100 mm

behind the torso line, in the case of a fixed rigid routing device; and

(c) when tested after being installed as it is intended to be used, is of sufficient strength to withstand, with the user-ready tether anchorage, the load referred to in S6.3.4 or S6.3.4.1, as applicable.

S6.3 *Strength requirements for tether anchorages.* Subject to S6.3.2, a vehicle manufactured from September 1, 1999 to August 31, 2001 may, at the manufacturer's option (with said option irrevocably selected prior to, or at the time of, certification of the vehicle), meet the requirements of S6.3.1 or S6.3.4. Subject to S6.3.2, vehicles manufactured on or after September 1, 2001 must meet the requirements of S6.3.1 of this standard.

S6.3.1 Subject to S6.3.2, when tested in accordance with S8, after preloading the device with a force of 500 N, point X of the SFAD must not be displaced horizontally more than 125 mm during the application of the force.

* * * * *

S6.3.4 Subject to subsections S6.3.4.1 and S6.3.4.2, every user-ready tether anchorage in a row of designated seating positions shall, when tested, withstand the application of a force of 10,000 N—

(a) applied by means of one of the following types of test devices, installed as a child restraint system would be installed in accordance with the manufacturer's installation instructions, namely,

(1) SFAD 1, to test a tether anchorage at a designated seating position that does not have a child restraint anchorage system; or

(2) SFAD 2, to test a tether anchorage at a designated seating position that has a child restraint anchorage system;

(b) applied—

(1) in a forward direction parallel to the vehicle's vertical longitudinal plane through the X point on the test device, and,

(2) initially, along a horizontal line or along any line below or above that line that is at an angle to that line of not more than 5 degrees;

(c) approximately linearly over a time, at the option of the vehicle manufacturer, of not more than 30 seconds, at any onset force rate of not more than 135 000 N/s; and

(d) maintained at a 10,000 N level for one second.

S6.3.4.1 Until September 1, 2001, every user-ready tether anchorage in a row of designated seating positions in a passenger car may, when tested, subject to subsection S6.3.4.2, withstand the application of a force of 5,300 N, which force shall be—

(a) applied by means of a belt strap that—

(1) extends not less than 250 mm forward from the vertical plane touching the rear top edge of the vehicle seat back,

(2) is fitted at one end with suitable hardware for applying the force and at the other end with a bracket for the attachment of the user-ready tether anchorage, and

(3) passes over the top of the vehicle seat back as shown in Figure 19 of this standard;

(b) applied—

(1) in a forward direction parallel to the vehicle's longitudinal vertical plane, and

(2) initially, along a horizontal line or along any line below that line that is at an angle to that line of not more than 20 degrees;

(c) attained within 30 seconds, at any onset force rate of not more than 135,000 N/s; and

(d) maintained at a 5,300 N level for one second.

S6.3.4.2 If the zones in which tether anchorages are located overlap and if, in the overlap area, a user-ready tether anchorage is installed that is designed to accept the tether strap hooks of two restraint systems simultaneously, both portions of the tether anchorage that are designed to bind with a tether strap hook shall withstand the force referred to in subsection S6.3.4 or S6.3.4.1, as the case may be, applied to both portions simultaneously.

S6.3.4.3 If a row of designated seating positions has more than one user-ready tether anchorage, the force referred to in S6.3.4, S6.3.4.1 or S6.3.4.2, as the case may be, shall be applied simultaneously in the manner specified in the relevant subsection.

S6.3.4.4 The strength requirement tests shall be conducted with the vehicle seat adjusted to its full rearward and full downward position and the seat back in its most upright position. When SFAD 2 is used in testing and cannot be attached to the lower anchorages with the seat back in this position, adjust the seat back as recommended by the manufacturer in its instructions for attaching child restraints. If no instructions are provided, adjust the seat back to the position that enables SFAD 2 to attach to the lower anchorages that is the closest to the most upright position.

S7. *Test conditions for testing tether anchorages.*

* * * * *

(a) Vehicle seats are adjusted to their full rearward and full downward position and the seat back is placed in its most upright position. When SFAD 2 is used in testing and cannot be attached to the lower anchorages with the seat back in this position, adjust the seat back as recommended by the manufacturer in its instructions for attaching child restraints. If no instructions are provided, adjust the seat back to the position that enables SFAD 2 to attach to the lower anchorages that is the closest to the most upright position.

* * * * *

S8. *Test procedures.* Each vehicle shall meet the requirements of S6.3.1 and S6.3.3 when tested according to the following procedures. Where a range of values is specified, the vehicle shall be able to meet the requirements at all points within the range. For testing specified in the procedures, the SFAD used in the test is connected to the anchorage by means of a steel cable that is fitted at one end with a high strength steel tether hook for attachment to the tether anchorage. The tether hook meets the specifications in Standard No. 213 (§ 571.213) as to the configuration and geometry of tether hooks required by that standard. A second steel cable is connected to the X point through which the test force is applied.

S8.1 Apply the force specified in S6.3.1 as follows—

(a) Use the following specified test device, as appropriate:

(1) SFAD 1, to test a tether anchorage at a designated seating position that does not have a child restraint anchorage system; or,

(2) SFAD 2, to test a tether anchorage at a designated seating position that has a child restraint anchorage system.

(b) Attach the SFAD 1 to the vehicle seat using the vehicle belts or the SFAD 2 to the lower anchorages of the child restraint anchorage system, as appropriate, and attach the test device to the tether anchorage, in accordance with the manufacturer's instructions provided pursuant to S12 of this standard. For the testing specified in this procedure, if SFAD 1 cannot be attached using the vehicle belts because of the location of the vehicle belt buckle, the test device shall be attached by material whose breaking strength is equal to or greater than the breaking strength of the webbing for the seat belt assembly installed as original equipment at that seating position. The geometry of the attachment shall duplicate the geometry, at the pre-load point, of the attachment of the originally installed seat belt assembly. All belt systems used to attach SFAD 1 shall be tightened to a tension of not less than 53.5 N and not more than 67 N, as

measured by a load cell used on the webbing portion of the belt. A rearward force of 135 N ± 15 N shall be applied to the center of the lower front crossmember of SFAD 2 to press the device against the seat back as the fore-aft position of the rearward extensions of the SFAD is adjusted to remove any slack or tension.

(c) Apply the force—

(1) Initially, in a forward direction in a vertical longitudinal plane and through the Point X on the test device; and

(2) Initially, along a line through the X point and at an angle of 10 ± 5 degrees above the horizontal. Apply a preload force of 500 N to measure the angle; and then

(3) Increase the pull force as linearly as practicable to a full force application of 15,000 N in not less than 24 seconds and not more than 30 seconds, and maintain at a 15,000 N level for 1 second.

S8.2 Apply the force specified in S6.3.2 as follows:

* * * * *

S9 *Requirements for the lower anchorages of the child restraint anchorage system.* As an alternative to complying with the requirements of S9, a vehicle manufactured from September 1, 1999 to August 31, 2002 may, at the manufacturer's option (with said option irrevocably selected prior to, or at the time of, certification of the vehicle), meet the requirements in S15 of this standard. Vehicles manufactured on or after September 1, 2002 must meet the requirements of S9 of this standard.

* * * * *

S9.1.1 * * *

(a) Are 6 mm ± .1 mm in diameter;

* * * * *

(f) Are an integral and permanent part of the vehicle or vehicle seat; and

* * * * *

S9.3 * * *

(c) To facilitate installation of the CRF in a vehicle seat, the side, back and top frames of the CRF may be removed for installation in the vehicle, as indicated in Figure 1A of this standard.

* * * * *

S9.4.1 When tested in accordance with S11, the lower anchorages shall not allow point X on SFAD 2 to be displaced horizontally more than 125 mm, after preloading the device, when—

(a) A force of 11,000 N is applied in a forward direction in a vertical longitudinal plane that is parallel (0 ± 5 degrees) to the vehicle's longitudinal centerline; and

* * * * *

S9.4.1.1 Forces described in S9.4.1(a), forward direction, shall be applied with an initial force application angle of 10 ± 5 degrees above the horizontal. Forces described in S9.4.1(b), lateral direction, shall be applied horizontally (0 ± 5 degrees).

* * * * *

S11. Test procedure. * * *

(a) *Forward force direction.* Place SFAD 2 in the vehicle seating position and attach it to the two lower anchorages of the child restraint anchorage system. Do not attach the tether anchorage. A rearward force of 135 ± 15 N shall be applied to the center of the lower front crossbar of SFAD 2 to press the device against the seat back as the fore-aft position of the rearward extensions of the SFAD is adjusted to remove any slack or tension. Apply a preload force of 500 N at point X of the test device. Increase the pull force as linearly as practicable to a full force application of 11,000 N in not less than 24 seconds and not more than 30 seconds, and maintain at an 11,000 N level for 10 seconds.

(b) *Lateral force direction.* Place SFAD 2 in the vehicle seating position and attach it to the two lower anchorages of the child restraint anchorage system. Do not attach the tether anchorage. A rearward force of 135 ± 15 N shall be applied to the center of the lower front crossbar of SFAD 2 to press the device against the seat back as the fore-aft position of the rearward extensions of the SFAD is adjusted to remove any slack or tension. Apply a preload force of 500 N at point X of the test device. Increase the pull force as linearly as practicable to a full force application of 5,000 N in not less than 24 seconds and not more than 30 seconds, and maintain at a 5,000 N level for 10 seconds.

S12. * * *

(b) In the case of vehicles required to be marked as specified in paragraphs S4.1, S9.5(a), or S15.4, explain the meaning of markings provided to locate the lower anchorages of child restraint anchorage systems; and

(c) Include instructions that provide a step-by-step procedure, including diagrams, for properly attaching a child restraint system's tether strap to the tether anchorages.

* * * * *

S15 Alternative to complying with the requirements of S9. As an alternative to complying with the requirements of S9, a vehicle manufactured from September 1, 1999 to August 31, 2002 may, at the manufacturer's option (with said option irrevocably selected prior to, or at the time of, certification of the vehicle), meet the requirements in S15 of this standard. Vehicles manufactured on or after September 1, 2002 must meet the requirements of S9 of this standard.

S15.1 *Dimensions and installation requirements.*

S15.1.1 *General.* The vehicle anchorages are positioned near the seat bight. The location of the anchorages is defined with respect to the CRF. If the vehicle seat is adjustable, it is adjusted as recommended by the vehicle manufacturer for use with child restraint systems.

S15.1.2 *Anchorage dimensions and location*

S15.1.2.1 The lower anchorages shall consist of two bars that—

(a) Are 6 mm ± .1 mm in diameter;

(b) Are straight, horizontal and transverse;

(c) Are not less than 25 mm in length;

(d) Can be connected to, over their entire length, as specified in paragraph S15.1.2.1(c), by the connectors of a child restraint system;

(e) Are 280 mm apart, measured from the center of the length of one bar to the center of the length of the other bar; and

(f) Are an integral and permanent part of the vehicle or vehicle seat.

S15.1.2.2 (a) The anchorage bars are located at the vehicle seating position with the aid of and with respect to the CRF rearward extensions, with the CRF placed against or near the vehicle seat back. With the CRF attached to the anchorages and resting on the seat cushion, the bottom surface shall have attitude angles within the limits in the following table, angles measured relative to the vehicle horizontal, longitudinal and transverse reference planes.

TABLE TO S15.1.2.2(A)

| | |
|---|---|
| Pitch | 15° ± 10° |
| Roll | 0° ± 5° |
| Yaw | 0° ± 10° |

**Note:** An explanation of the above angles is given in Figure 1.

(b) With adjustable seats adjusted as described in S15.1.2.2(c), each lower anchorage bar shall be located so that a vertical transverse plane intersecting the center of the bar is:

(1) Not more than 70 mm behind point Z of the CRF, measured parallel to the bottom surface of the CRF and to the center of the bar, with the CRF rear surface against the seat back; and

(2) Not less than 120 mm behind the vehicle seating reference point, measured horizontally and to the center of the bar. (**Note:** To facilitate installation of the CRF in a vehicle seat, the CRF may be constructed of smaller

separable parts and assembled in the vehicle seat. Alternatively, vehicle components may be removed to allow access.)

(c) Adjustable seats are adjusted as recommended by the vehicle manufacturer for use with child restraint systems.

S15.2 *Static Strength Requirements.*

S15.2.1 The strength of the anchorages shall be determined using the procedure of S15.3 to apply forces to the SFAD 2, installed in the vehicle seating position and engaged with the anchorages. The vehicle seat shall be installed in the vehicle, or in sufficient parts of the vehicle so as to be representative of the strength and rigidity of the vehicle structure. If the seat is adjustable, it shall be placed in the position recommended by the vehicle manufacturer for use with child restraint systems. If no adjusted position is recommended, the seat shall be placed in any position, at the agency's option.

S15.2.2 Horizontal excursion of point X during application of the 8 kN and 5 kN forces shall be not more than 125 mm, after preloading the device.

S15.3 *Forces and directions.*

S15.3.1 A rearward force of 135 N ± 15 N shall be applied to the center of the lower front crossbar of SFAD 2 to press the device against the seat back as the fore-aft position of the rearward extensions of the SFAD is adjusted to remove any slack or tension. Forces shall be applied to SFAD 2 in forward and lateral directions according to the following table.

TABLE TO S15.3.1.—DIRECTIONS OF TEST FORCES

| | | |
|---|---|---|
| Forward | 0° ± 5° | 8 kN ± 0.25 kN |
| Lateral | 75° ± 5° (to both sides of straight forward) | 5 kN ± 0.25 kN |

S15.3.2 Forces in the forward direction shall be applied with an initial force application angle of 10 ± 5 degrees above the horizontal. Lateral forces shall be applied horizontally (0° ± 5°). A pre-load force of 500 N ± 25 N shall be applied at the prescribed loading point (point X) in Figure 17. The force shall be increased to 8 kN ± 0.25 kN for forward tests, or to 5 kN ± 0.25 kN for lateral tests. Full application of the force shall be achieved within a time period of 2 seconds or less. The force shall be maintained for a period of 0.25 seconds ± 0.05 seconds.

S15.3.3 If anchorages for more than one child restraint anchorage system are installed in the vehicle seat assembly and not directly into the vehicle structure, the forces described in S15.3 shall be applied simultaneously to SFADs engaged with the anchorages at each seating position.

S15.4 *Marking and conspicuity of the lower anchorages.* At least one anchorage bar (when deployed for use), one guidance fixture, or one seat marking feature shall be readily visible to the person installing a CRF. Storable anchorages shall be provided with a telltale or label that is visible when the anchorage is stored.

BILLING CODE 4910–59–P

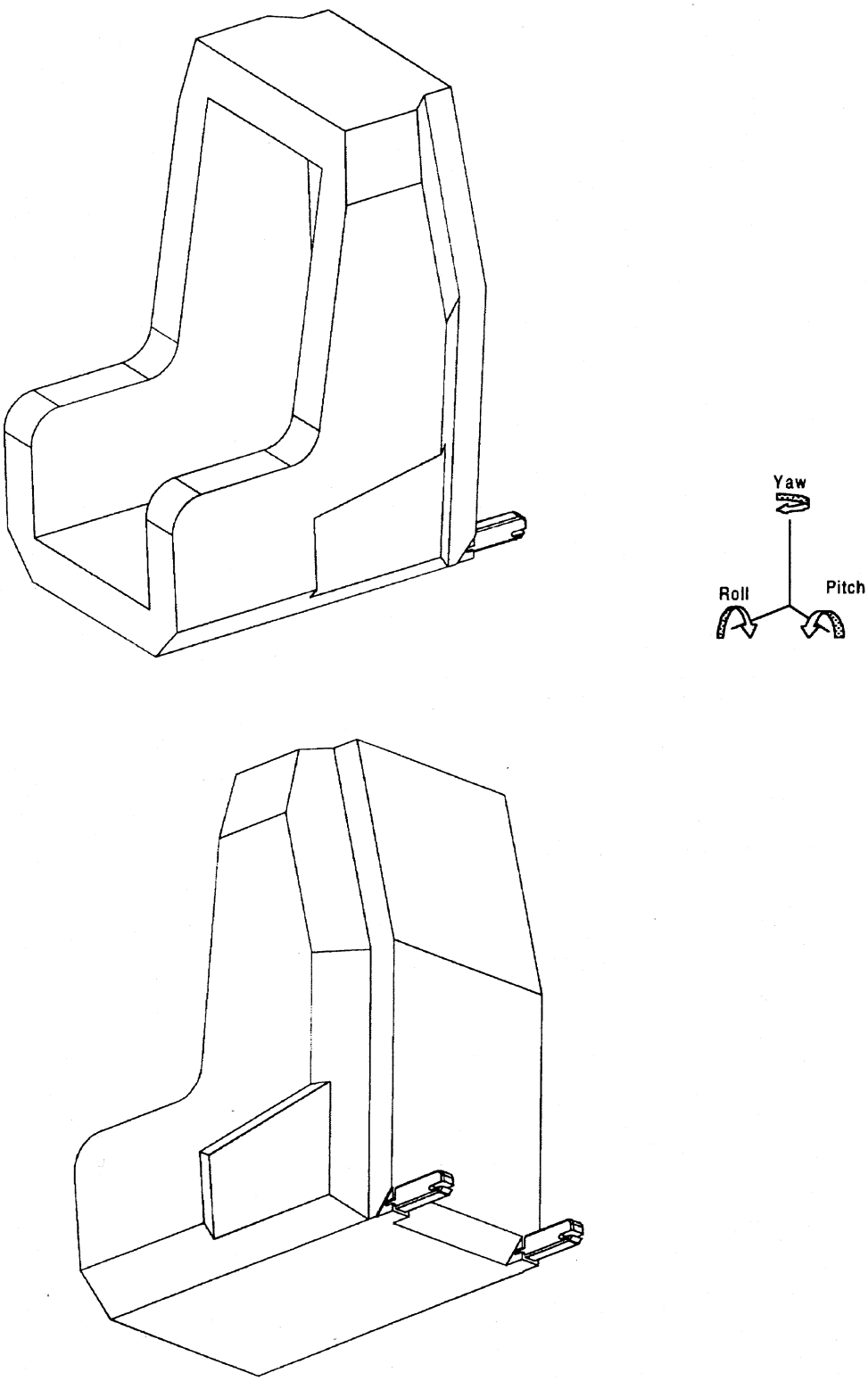


**Figure 1 – Child restraint fixture (CRF)**

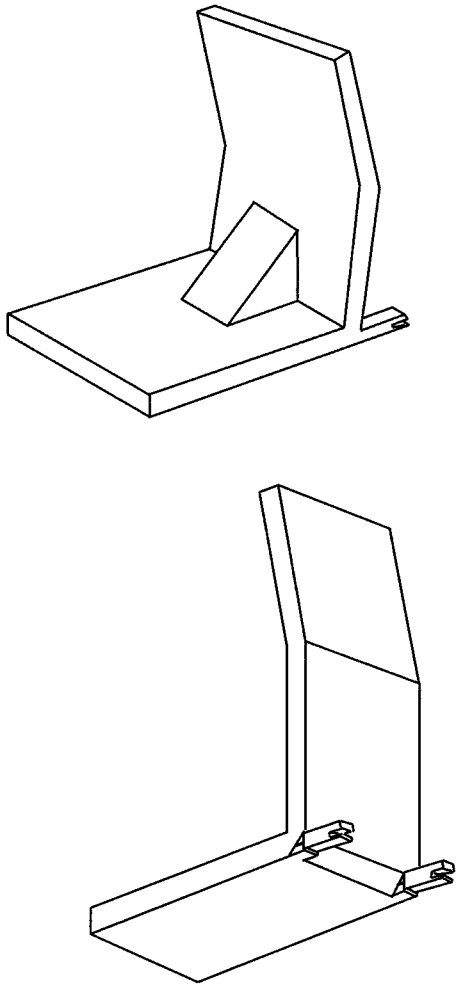

Figure 1A - Child Restraint Fixture (CRF) with Side and Top Frames Removed

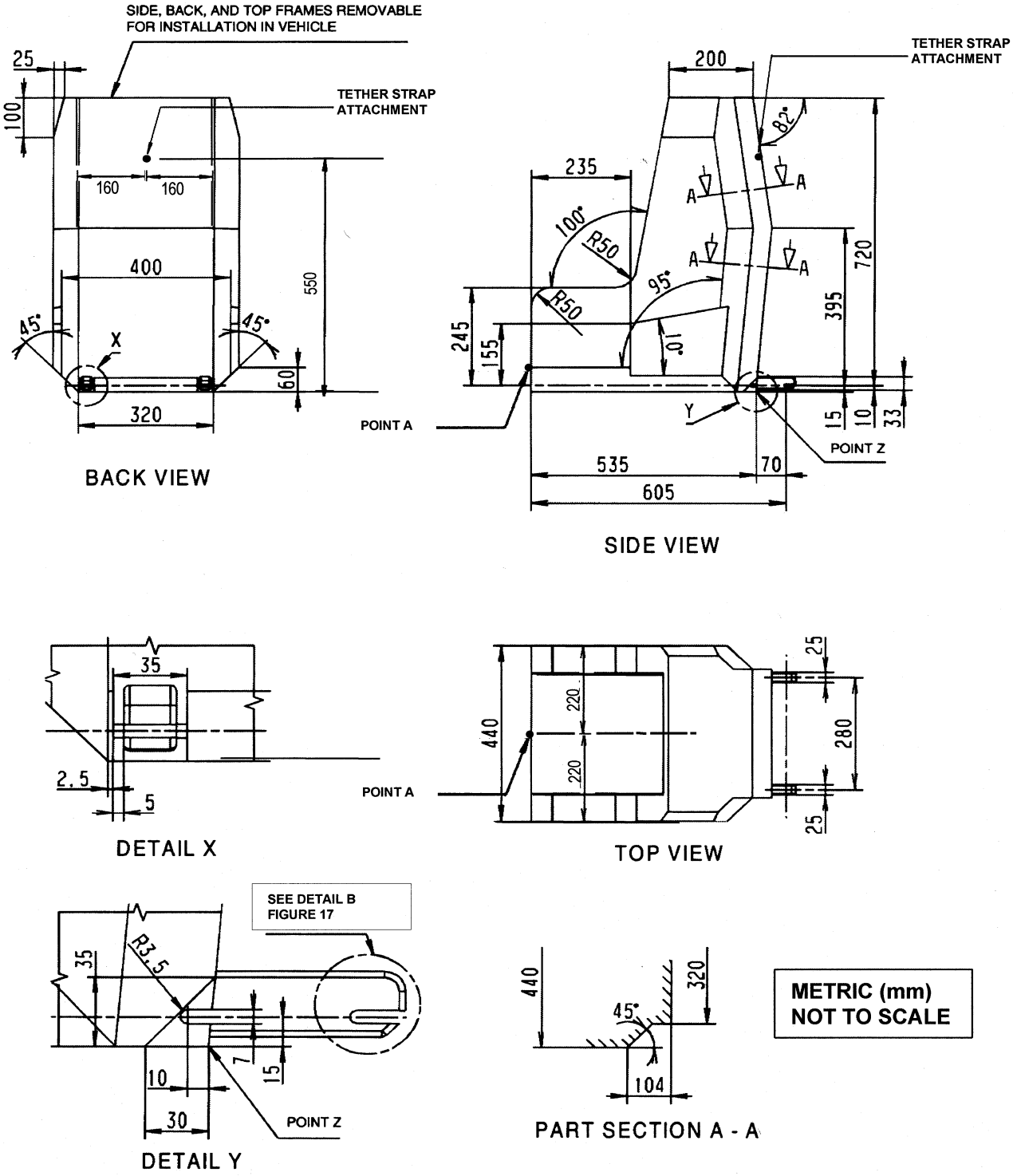


Note:

1. Mass of CRF 5 to 8 kg

**Figure 2 - Child restraint fixture (CRF)**

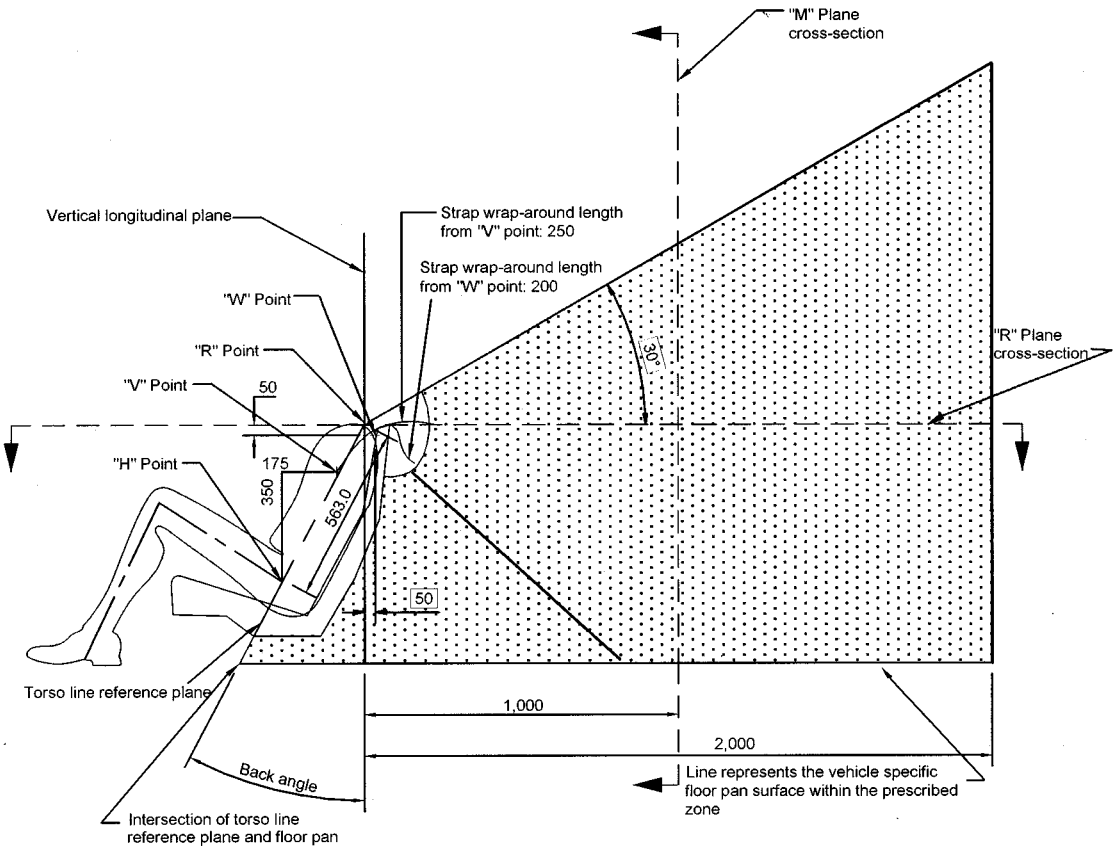


Notes

1. Dimensions in mm, except where otherwise indicated
2. Portion of user-ready tether anchorage that is designed to bind with the tether strap hook to be located within shaded zone
3. Drawing not to scale
4. "R" Point: Shoulder reference point
5. "V" Point: V-reference point, 350 mm vertically above and 175 mm horizontally back from H-point
6. "W" Point: W-reference point, 50 mm vertically below and 50 mm horizontally back from "R" Point
7. "M" Plane: M-reference plane, 1 000 mm horizontally back from "R" Point

**Figure 3 -- Side View, User-ready Tether Anchorage Location**

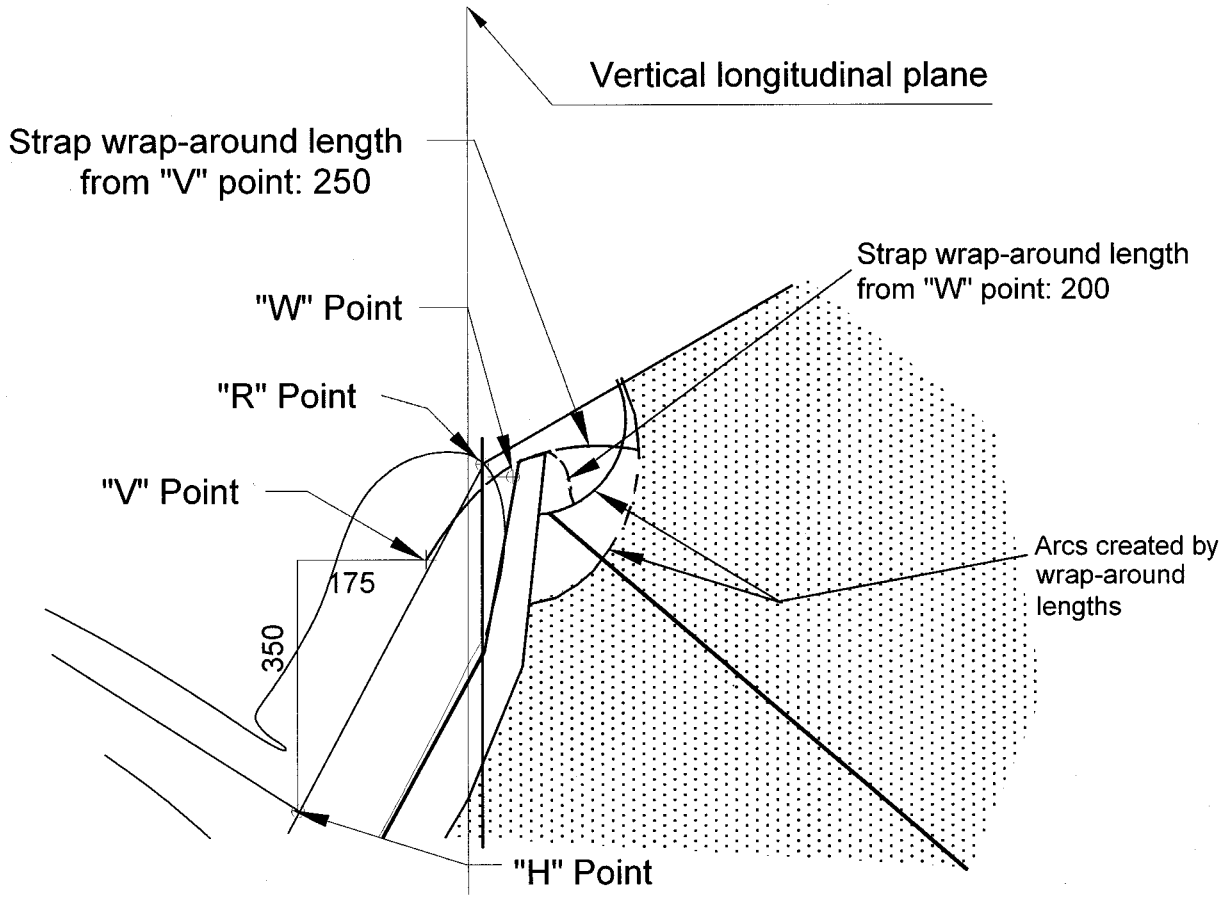


Notes

1. Dimensions in mm, except where otherwise indicated
2. Portion of user-ready tether anchorage that is designed to bind with the tether strap hook to be located within shaded zone
3. Drawing not to scale
4. "R" Point: Shoulder reference point
5. "V" Point: V-reference point, 350 mm vertically above and 175 mm horizontally back from H-point
6. "W" Point: W-reference point, 50 mm vertically below and 50 mm horizontally back from "R" Point
7. "M" Plane: M-reference plane, 1 000 mm horizontally back from "R" Point

**Figure 4 -- Enlarged Side View of Strap Wrap-around Area, User-ready Tether Anchorage Location**

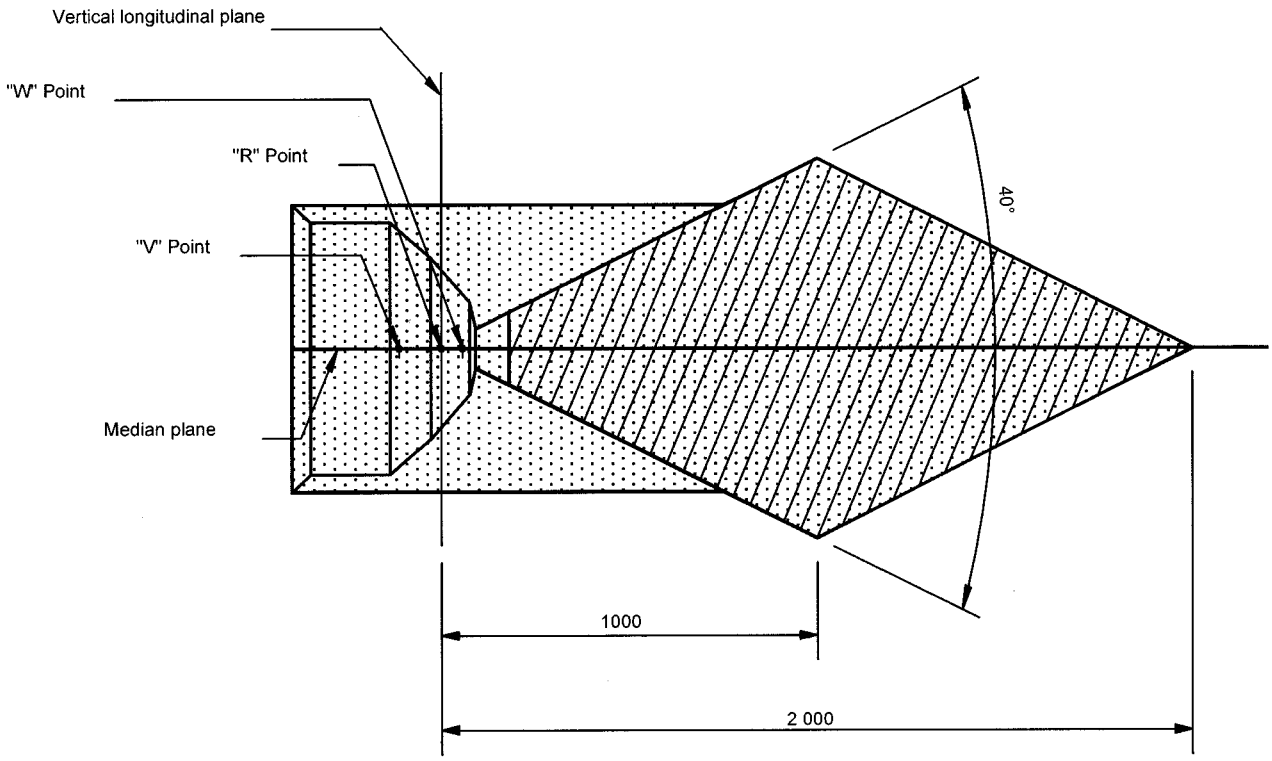


1. Dimensions in mm, except where otherwise indicated
2. Portion of user-ready tether anchorage that is designed to bind with the tether strap hook to be located within shaded zone
3. Drawing not to scale
4. "R" Point: Shoulder reference point
5. "V" Point: V-reference point, 350 mm vertically above and 175 mm horizontally back from H-point.
6. "W" Point: W-reference point, 50 mm vertically below and 50 mm horizontally back from "R" Point

**Figure 5. Plan View (R-plane Cross Section), User-ready Tether Anchorage Location**

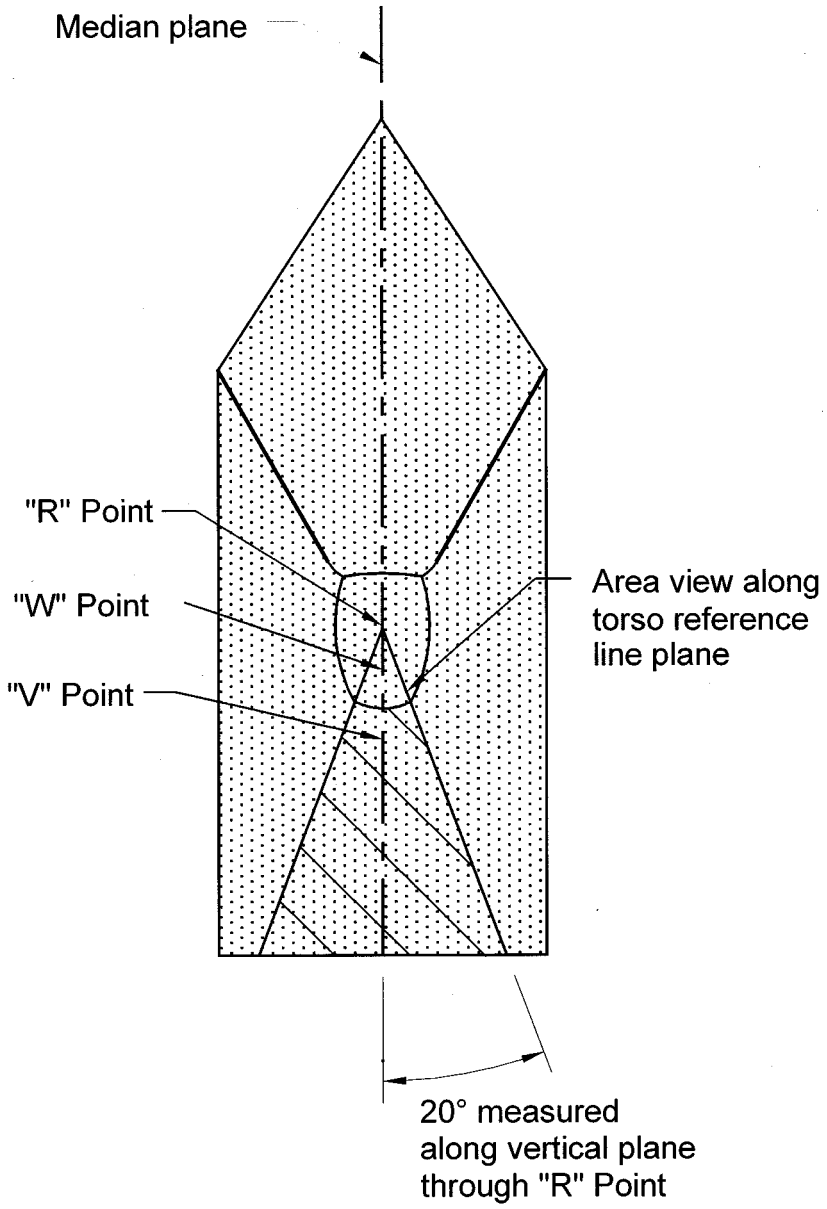


Notes

1. Portion of user-ready tether anchorage that is designed to bind with the tether strap hook to be located within shaded zone
2. Drawing not to scale
3. “R” Point: Shoulder reference point
4. “V” Point: V-reference point, 350 mm vertically above and 175 mm horizontally back from H-point
5. “W” Point: W-reference point, 50 mm vertically below and 50 mm horizontally back from “R” Point

**Figure 6 -- Front View, User-ready Tether Anchorage Location**

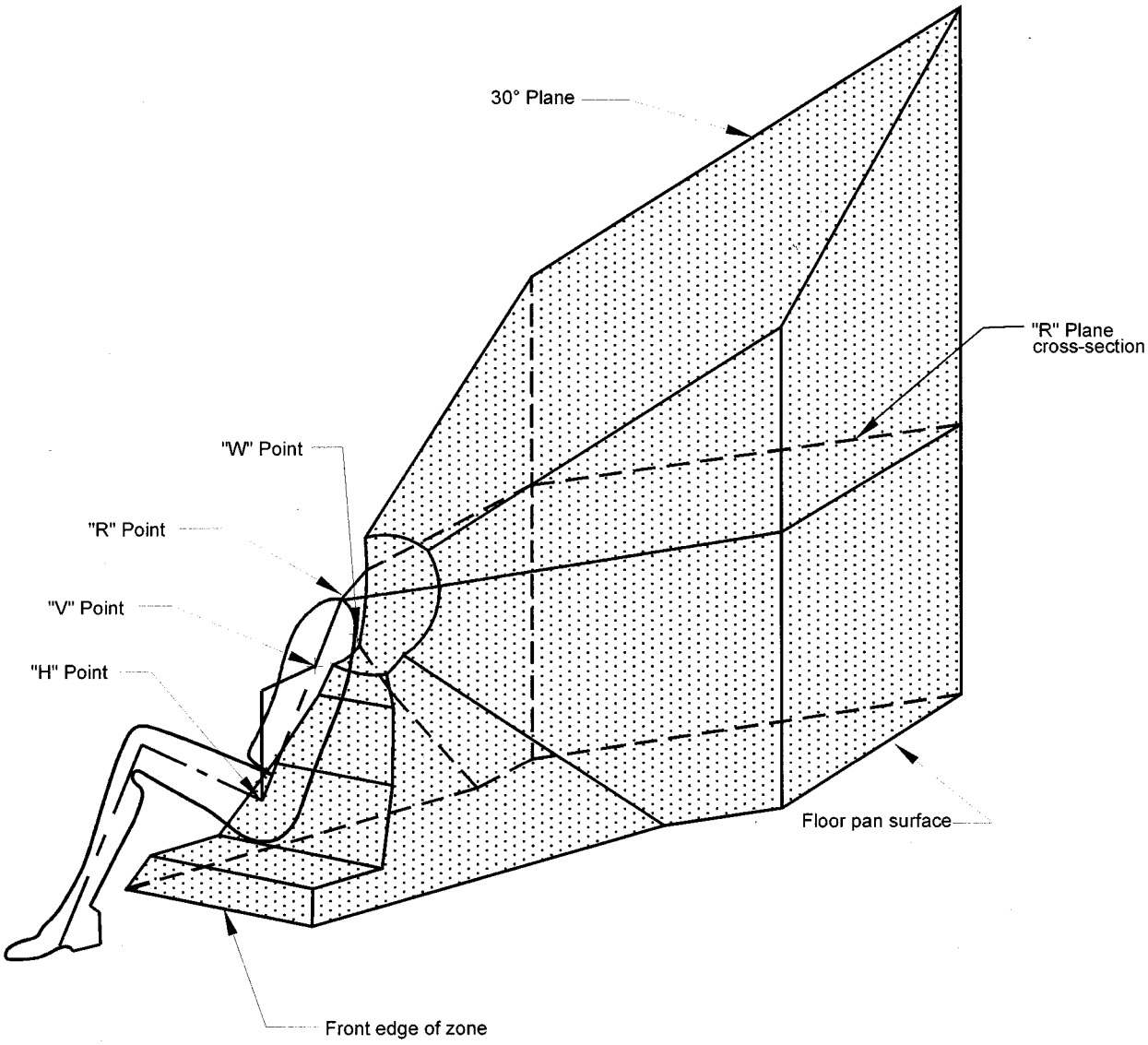


Notes

1. Portion of user-ready tether anchorage that is designed to bind with the tether strap hook to be located within shaded zone
2. Drawing not to scale
3. "R" Point: Shoulder reference point
4. "V" Point: V-reference point, 350 mm vertically above and 175 mm horizontally back from H-point
5. "W" Point: W-reference point, 50 mm vertically below and 50 mm horizontally back from "R" Point

**Figure 7 -- Three-dimensional Schematic View of User-ready Tether Anchorage Location**

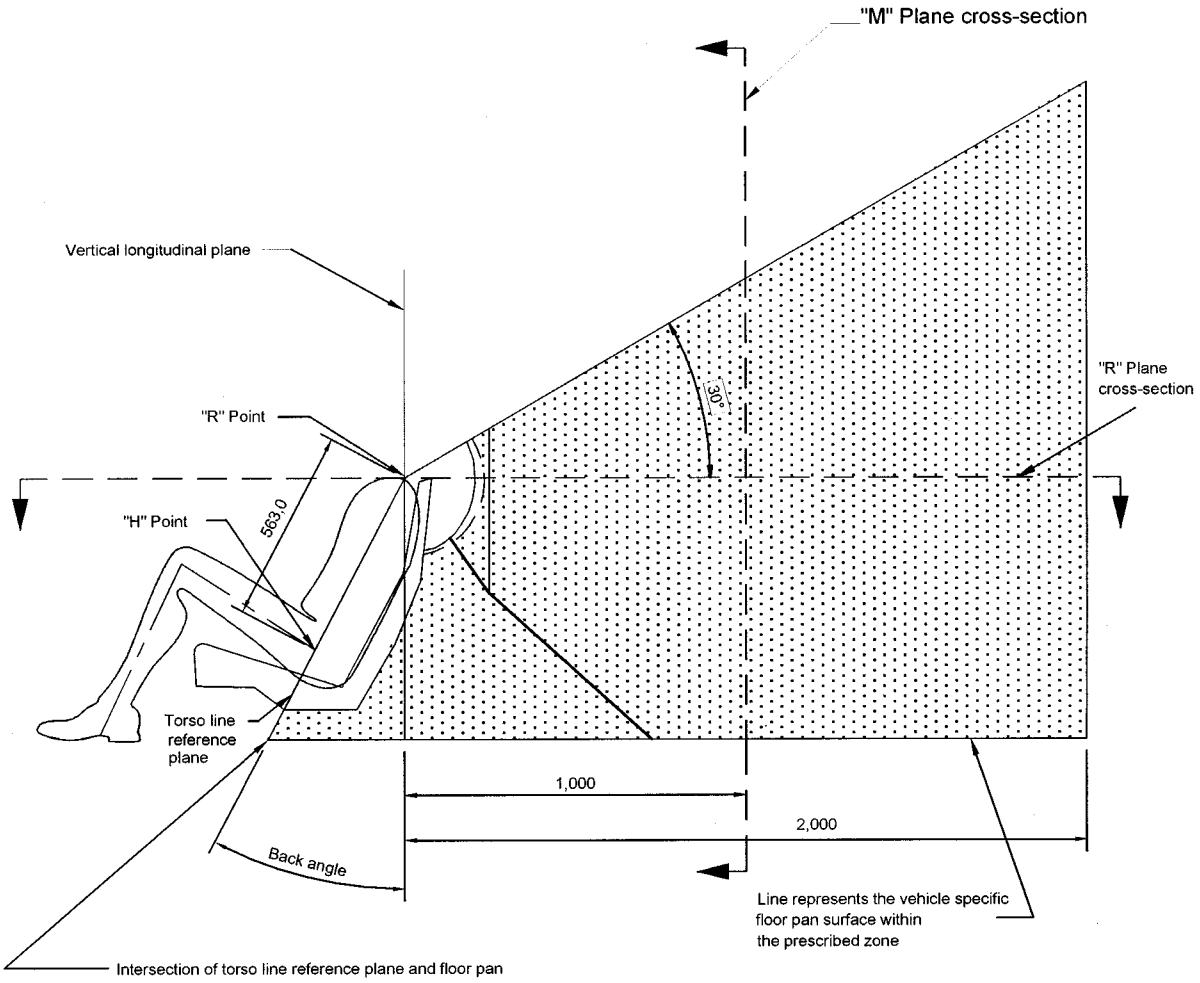


Notes

1. Dimensions in mm, except where otherwise indicated
2. Portion of user-ready tether anchorage that is designed to bind with the tether strap hook to be located within shaded zone
3. Drawing not to scale
4. "R" Point: Shoulder reference point
5. "M" Plane: M-reference plane, 1 000 mm horizontally back from "R" Point

**Figure 8 -- Side View, User-ready Tether Anchorage Optional Location for Passenger Cars and Multipurpose Passenger Vehicles until September 1, 2004**

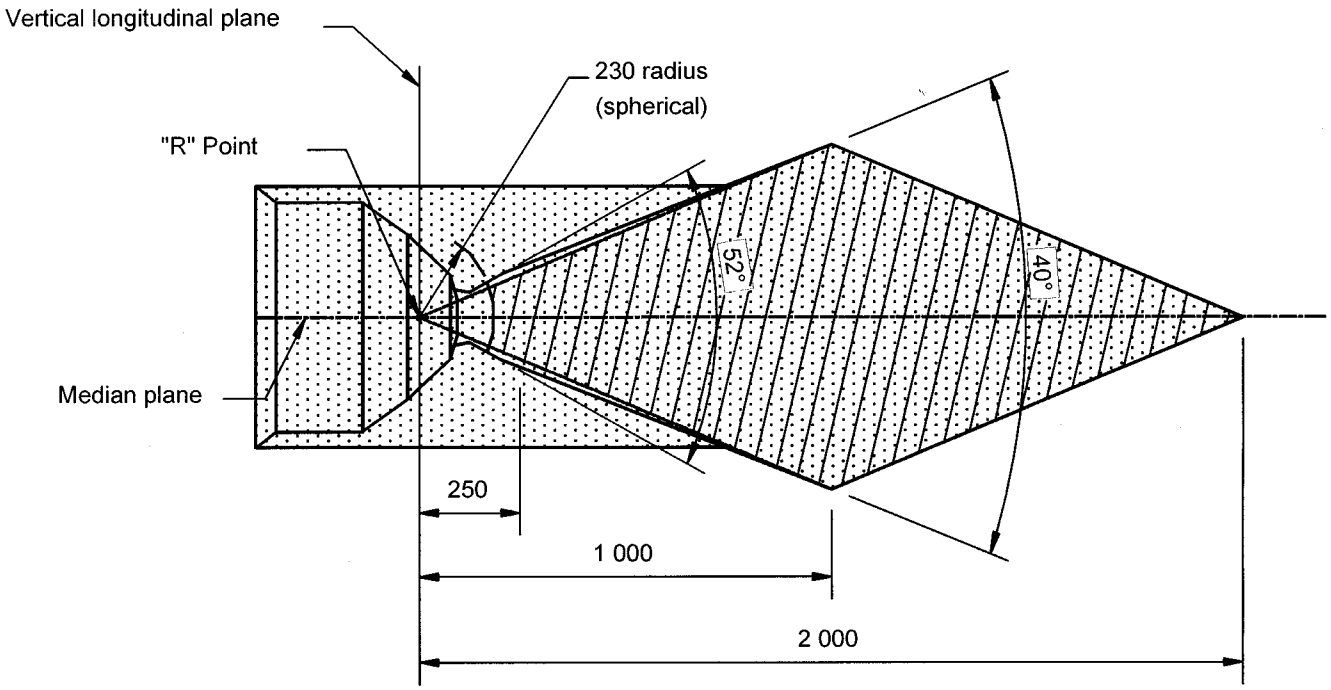


Notes

1. Dimensions in mm, except where otherwise indicated
2. Portion of user-ready tether anchorage that is designed to bind with the tether strap hook to be located within shaded zone
3. Drawing not to scale
4. “R” Point: Shoulder reference point

**Figure 9 -- Plan View (R-point Level), User-ready Tether Anchorage Optional Location for Passenger Cars and Multipurpose Passenger Vehicles until September 1, 2004**

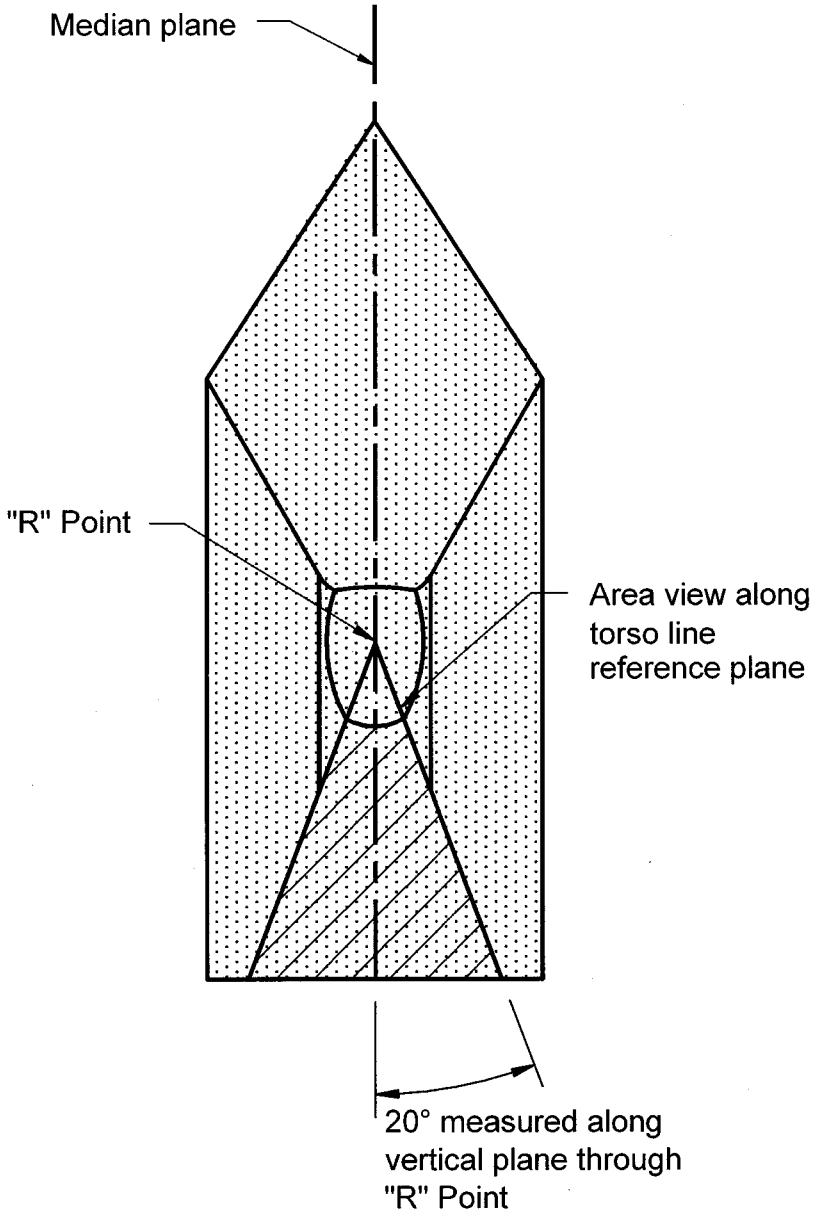


Notes

1. Portion of user-ready tether anchorage that is designed to bind with the tether strap hook to be located within shaded zone
2. Drawing not to scale
3. "R" Point: Shoulder reference point

**Figure 10 -- Front View, User-ready Tether Anchorage Optional Location for Passenger Cars and Multipurpose Passenger Vehicles until September 1, 2004**

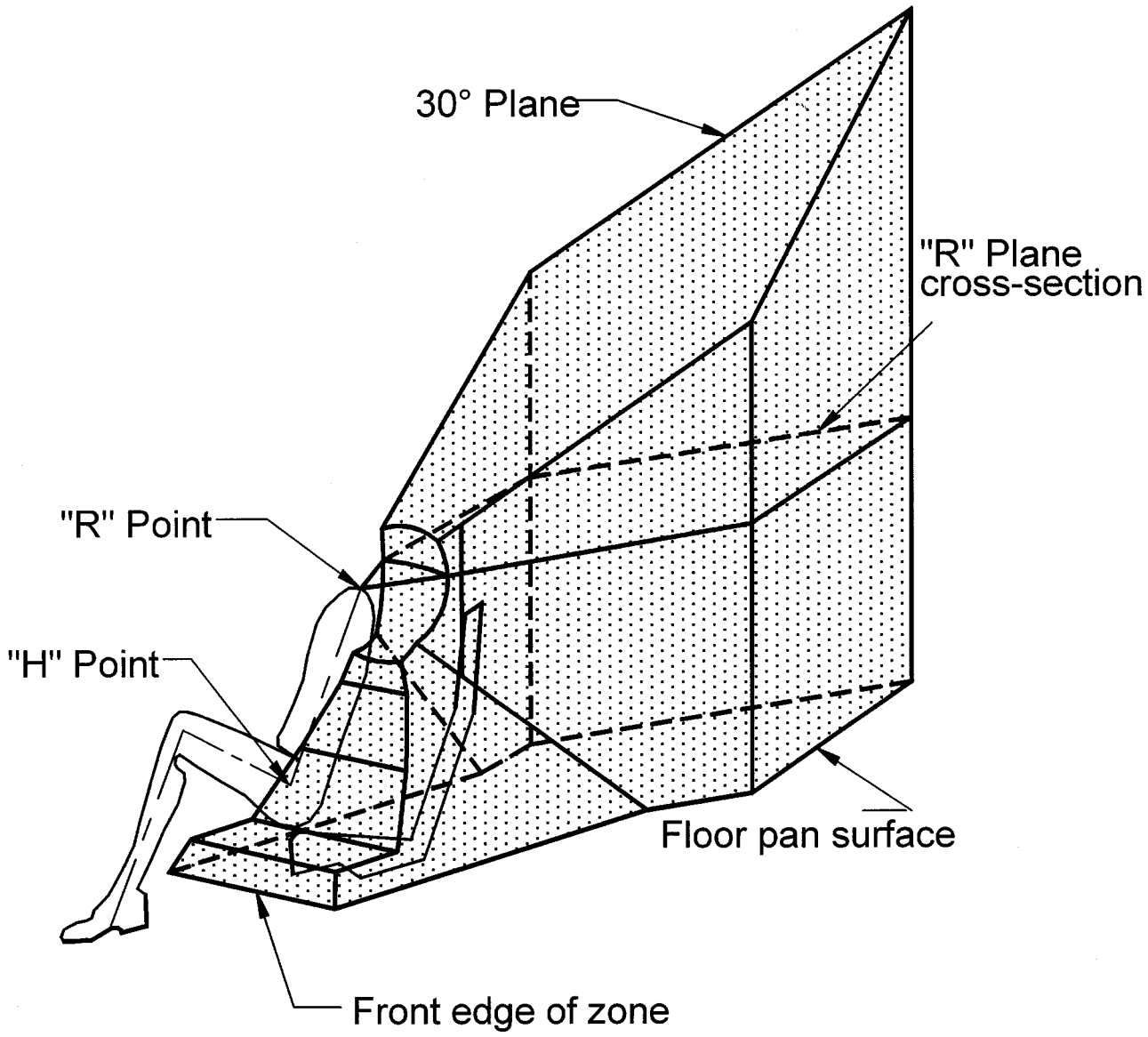


Notes

1. Portion of user-ready tether anchorage that is designed to bind with the tether strap hook to be located within shaded zone
2. Drawing not to scale
3. "R" Point: Shoulder reference point

**Figure 11 -- Three-dimensional Schematic View of User-ready Tether Anchorage Optional Location for Passenger Cars and Multipurpose Passenger Vehicles until September 1, 2004**

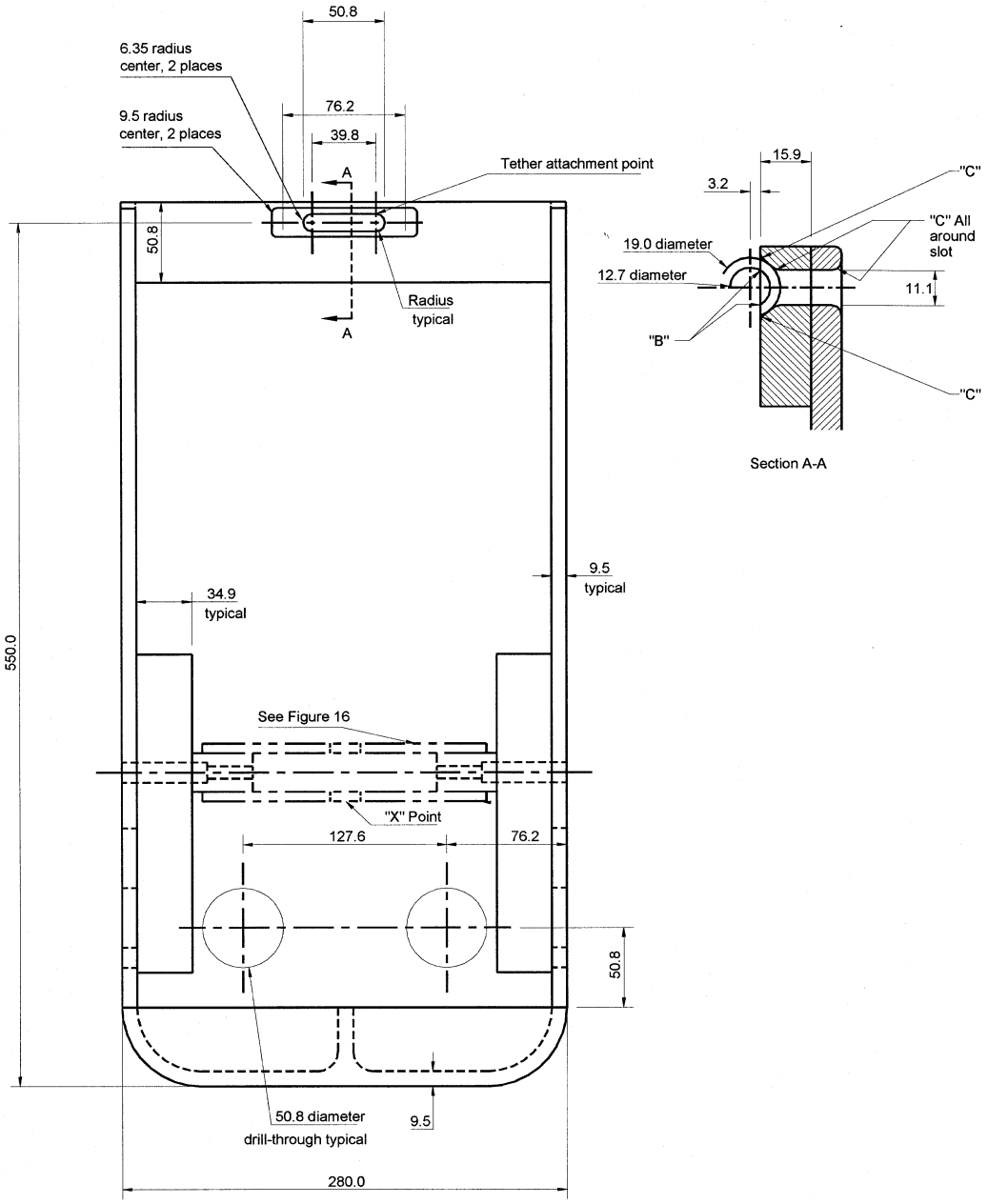


Notes

1. Material: 6061-T6-910 Aluminum
2. Dimensions in mm, except where otherwise indicated
3. Drawing not to scale
4. “B” = approximately 0.8 mm
5. “C” = approximately 3.2 mm

**Figure 15 -- Front View, Static Force Application Device 1 (SFAD 1)**

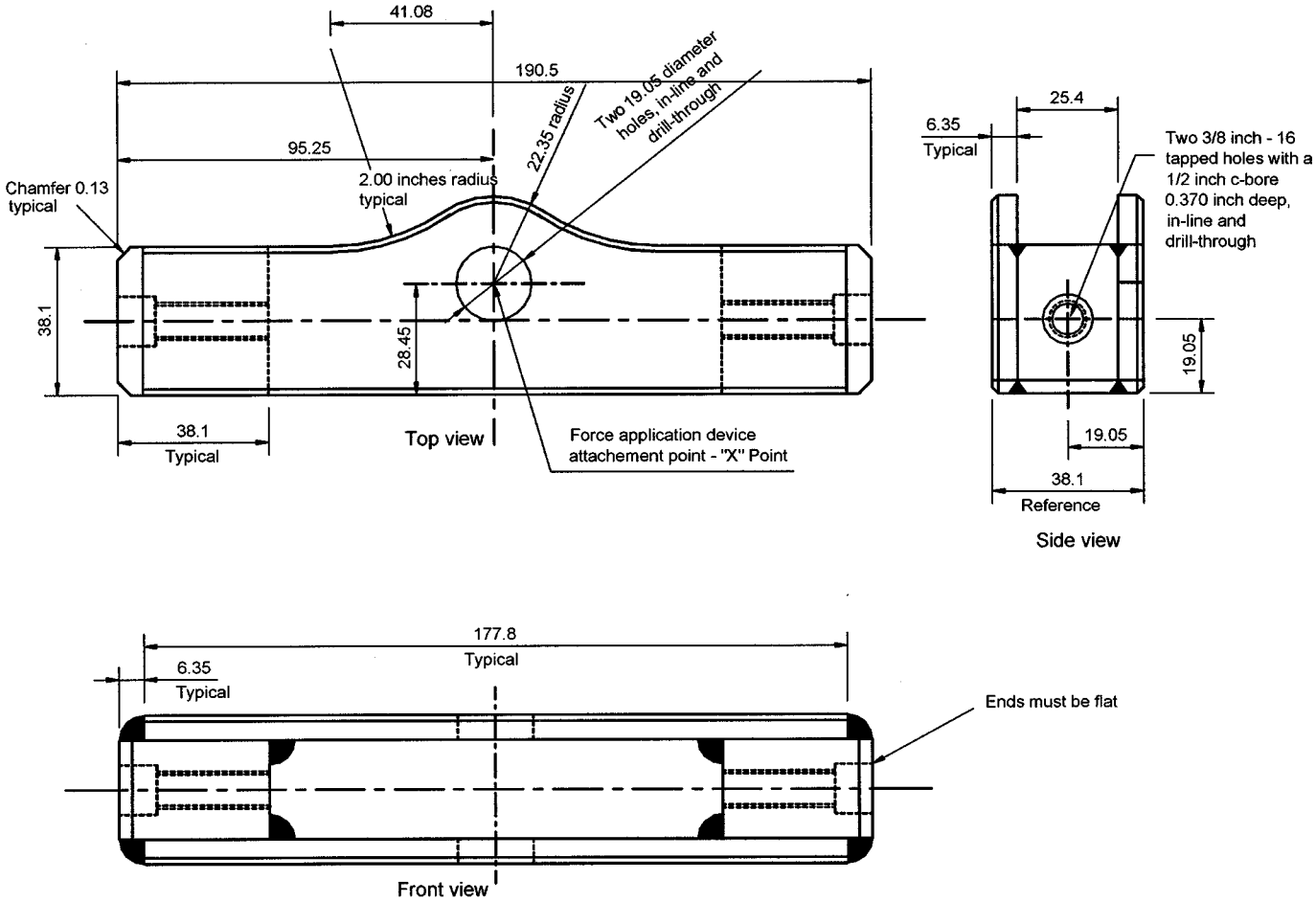


Notes

1. Material: Steel
2. Dimensions in mm, except where otherwise indicated
3. Drawing not to scale
4. Break all outside corners approximately 1.5 mm
5. Surfaces and edges are not to be machined unless otherwise specified for tolerance.
6. Saw-cut or stock size material whenever possible.
7. Construction to be securely welded.

**Figure 16 -- Cross Bar, Static Force Application Device 1 (SFAD 1)**

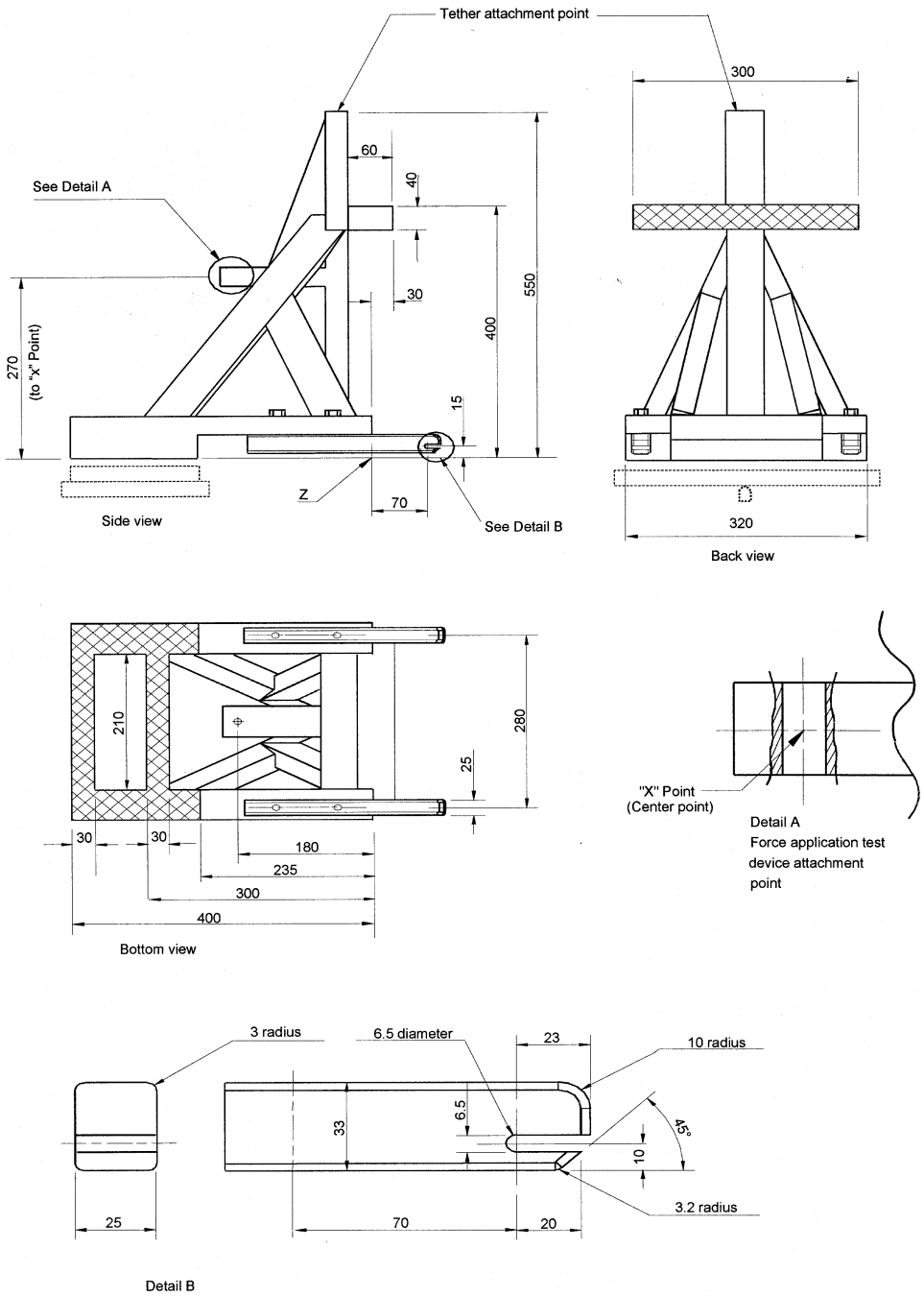


Notes:

1. Drawing not to scale
2. Dimensions in mm, except where otherwise indicated
3. Device stiffness satisfied when using a securely welded construction consisting of rectangular 3 mm steel tubing and 6 mm thick load application plate
4. If construction not as per note 3, stiffness of device is satisfied if movement of point "X" is not more than 2 mm in any direction when forces are applied as specified in S15.2.1, with device attached to rigid anchorage bars and the front cross member supported by a rigid bar that is held at the center by a longitudinal pivot 25 mm below the SFAD2 base (as shown in broken lines) to allow bending and twisting of the base of the device. Any deformation of the anchorage bars to be excluded from the measurements of the movement of point "X".

**Figure 17- Side, Back and Bottom Views, ISO 13216-1 Static Force Application Device 2 (SFAD 2)**

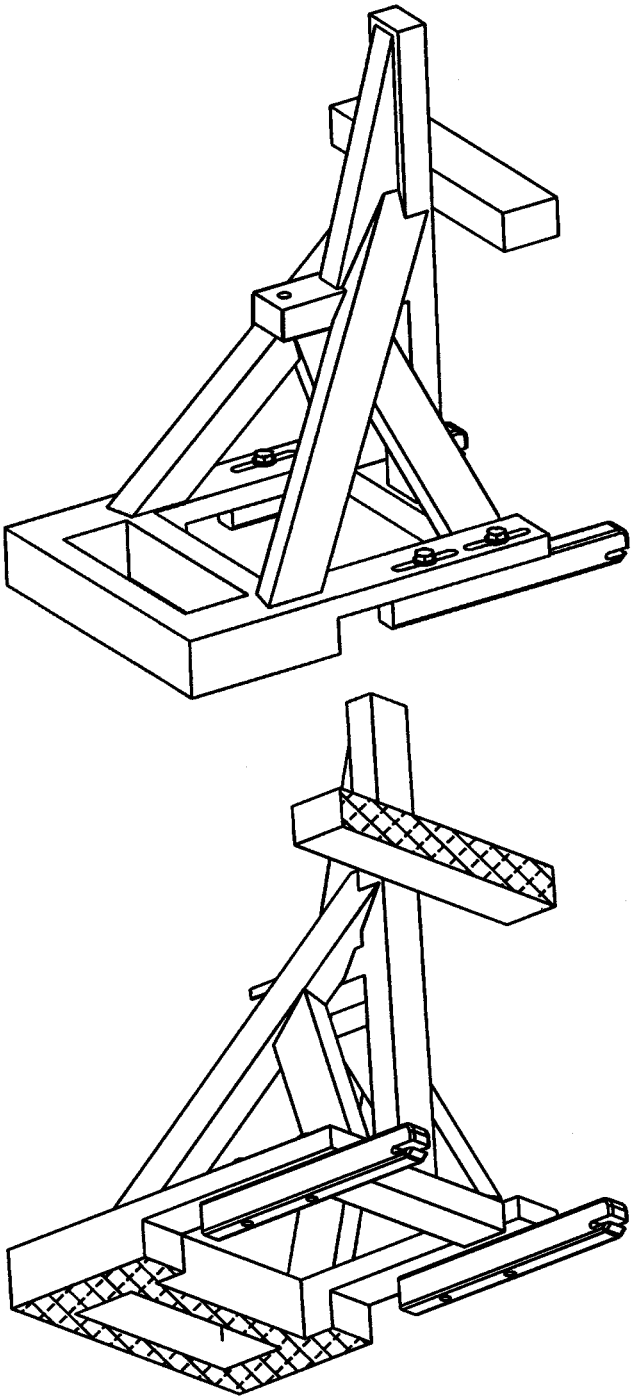

**Figure 18 -- Three-dimensional Schematic Views of the ISO 13216-1 Static Force Application Device 2 (SFAD 2)**

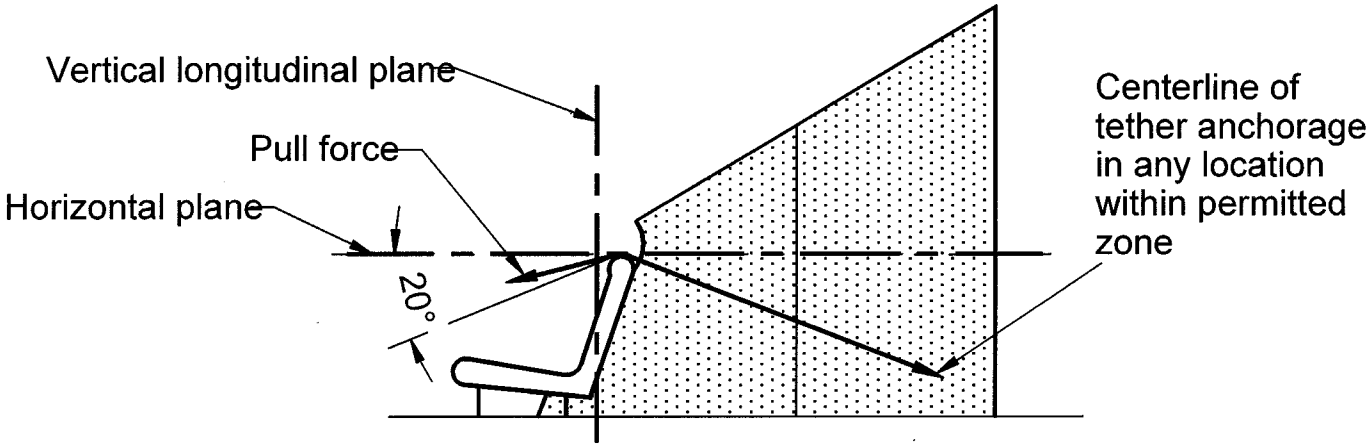


**Figure 19 – Side View, Optional Tether Anchorage Test for Passenger Cars until September 1, 2004**

Issued on August 18, 1999.

**Ricardo Martinez,**

*Administrator.*

[FR Doc. 99–22174 Filed 8–25–99; 3:38 pm]

BILLING CODE 4910–59–C

federal register

Tuesday
August 31, 1999

## Part III

# State Justice Institute

**Grant Guideline; Notice**

## STATE JUSTICE INSTITUTE

### Grant Guideline

**AGENCY:** State Justice Institute.

**ACTION:** Proposed grant guideline.

**SUMMARY:** This Guideline sets forth the administrative, programmatic, and financial requirements attendant to Fiscal Year 2000 State Justice Institute grants, cooperative agreements, and contracts.

**DATES:** The Institute invites public comment on the Guideline until September 30, 1999.

**ADDRESSES:** Comments should be mailed to the State Justice Institute, 1650 King St. (Suite 600), Alexandria, VA 22314 or e-mailed to kschwartz@statejustice.org.

**FOR FURTHER INFORMATION CONTACT:** David I. Tevelin, Executive Director, or Kathy Schwartz, Deputy Director, State Justice Institute, 1650 King St. (Suite 600), Alexandria, VA 22314, (703) 684–6100.

**SUPPLEMENTARY INFORMATION:** Pursuant to the State Justice Institute Act of 1984, 42 U.S.C. 10701, *et seq.*, as amended, the Institute is authorized to award grants, cooperative agreements, and contracts to State and local courts, nonprofit organizations, and others for the purpose of improving the quality of justice in the State courts of the United States.

### Status of FY 2000 Appropriations

The Senate has approved an FY 2000 appropriation of $6.85 million for the Institute. The House of Representatives has recommended no funding for SJI in FY 2000. The level of the Institute's appropriation, if any, will be determined by a Conference Committee this fall. The grant program proposed in this Guideline and the funding targets noted for specific programs are based on funding at the level approved by the Senate. The Final Grant Guideline may be modified after final Congressional action on the appropriation.

### Types of Grants Available and Funding Schedules

The SJI grant program is designed to be responsive to the most important needs of the State courts. To meet the full range of the courts' diverse needs, the Institute offers five different categories of grants. The types of grants available in FY 2000 and the funding cycles for each program are provided below:

*Project Grants.* These grants are awarded to support innovative education, research, demonstration, and technical assistance projects that can improve the administration of justice in State courts nationwide. Except for ''Single Jurisdiction'' project grants awarded under section II.D. (see below), project grants are intended to support innovative projects of national significance. As provided in section V. of the Guideline, project grants may ordinarily not exceed $200,000 for 15 months; however, grants in excess of $150,000 are likely to be rare, and awarded only to support projects likely to have a significant national impact.

Applicants must submit a concept paper (see section VI.) and, ordinarily, an application (see section VII.) in order to obtain a project grant. As indicated in section VI.C., the Board may make an ''accelerated'' grant of less than $40,000 on the basis of the concept paper alone when the need for the project is clear and little additional information about the operation of the project would be provided in an application.

With the exception of papers following up on the National Conference on Pro Se Litigants Appearing in Court, the FY 2000 mailing deadline for project grant concept papers is November 24, 1999. Papers must be postmarked or bear other evidence of submission by that date. The Board of Directors will meet in early March 2000 to invite formal applications based on the most promising concept papers. Applications will be due on May 10, 2000, and awards will be approved by the Board in July. Papers following up on the National Conference on Pro Se Litigants Appearing in Court must be mailed by March 17, 2000. The Board of Directors will review these papers in early May 2000 and invite applications based on the most promising concept papers. Applications will be due by June 10, 2000, and awards will be approved by the Board in July. See section VII.A. for Project Grant application procedures.

*Single Jurisdiction Project Grants.* Section II.D. reserves up to $300,000 for Projects Addressing a Critical Need of a Single State or Local Jurisdiction. To receive a grant under this program, an applicant must demonstrate that (1) the proposed project is essential to meeting a critical need of the jurisdiction and (2) the need cannot be met solely with State and local resources within the foreseeable future. Applicants are encouraged to submit proposals to replicate approaches or programs that have been evaluated as effective under an SJI grant. Examples of projects that could be replicated are listed in Appendix F. See section VII.A for Single Jurisdiction Grant application procedures.

*Technical Assistance Grants.* Section II.E. reserves up to $400,000 for Technical Assistance Grants. Under this program, a State or local court may receive a grant of up to $30,000 to engage outside experts to provide technical assistance to diagnose, develop, and implement a response to a jurisdiction's problems.

Letters of application for a Technical Assistance grant may be submitted at any time. Applicants submitting letters between June 12 and September 30, 1999 will be notified of the Board's decision by December 10, 1999; those submitting letters between October 1, 1999 and January 14, 2000 will be notified by March 31, 2000; those submitting letters between January 15, 2000 and March 10, 2000 will be notified by May 26, 2000; and those submitting letters between March 11, 2000 and June 10, 2000 will be notified by August 25, 2000. Applicants submitting letters between June 11 and September 29, 2000 will be notified of the Board's decision by December 15, 2000. See section VII.D. for Technical Assistance Grant application procedures.

*Curriculum Adaptation Grants.* A grant of up to $20,000 may be awarded to a State or local court to replicate or modify a model training program developed with SJI funds. The Guideline allocates up to $100,000 for these grants in FY 2000.

Letters requesting Curriculum Adaptation grants may be submitted at any time during the fiscal year. However, in order to permit the Institute sufficient time to evaluate these proposals, letters must be submitted no later than 90 days before the projected date of the training program. See section VII.E. for Curriculum Adaptation Grant application procedures.

*Scholarships.* The Guideline allocates up to $200,000 of FY 2000 funds for scholarships to enable judges and court managers to attend out-of-State education and training programs.

Scholarships for eligible applicants are approved largely on a ''first come, first served'' basis, although the Institute may approve or disapprove scholarship requests in order to achieve appropriate balances on the basis of geography, program provider, and type of court or applicant (e.g., trial judge, appellate judge, court administrator). Scholarships will be approved only for programs that either (1) address topics included in the Guideline's Special Interest categories (section II.B.); (2) enhance the skills of judges and court managers; or (3) are part of a graduate program for judges or court personnel.

Applicants interested in obtaining a scholarship for a program beginning between January 1 and March 31, 2000 must submit their applications and any required accompanying documents between October 1 and December 1, 1999. For programs beginning between April 1 and June 30, 2000, the applications and documents must be submitted between January 7 and March 7, 2000. For programs beginning between July 1 and September 30, 2000, the applications and documents must be submitted between April 3 and June 1, 2000. For programs beginning between October 1 and December 31, 2000, the applications and documents must be submitted between July 5 and September 1, 2000. For programs beginning between January 1 and March 31, 2001, the applications and documents must be submitted between October 2 and December 1, 2000. See section VII.F for Scholarship application procedures.

*Continuation and On-going Support Grants.* Continuation grants (see sections III.E., V.C. and D., and VII.B) are intended to enhance the specific program or service begun during the initial grant period. On-going support grants (see sections III.O., V.C. and D., and VII.C.) may be awarded for up to a three-year period to support national-scope projects that provide the State courts with critically needed services, programs, or products.

The Guideline establishes a combined target for continuation and on-going support of approximately 25% of the total amount projected to be available for all grants in FY 2000. Grantees should accordingly be aware that the award of a grant to support a project does not constitute a commitment to provide either continuation funding or on-going support.

An applicant for a continuation or on-going support grant must submit a letter notifying the Institute of its intent to seek such funding, no later than 120 days before the end of the current grant period. The Institute will then notify the applicant of the deadline for its application. See section VII.B. and C. for continuation and on-going support grant application procedures.

## Special Interest Categories

The Guideline includes nine Special Interest categories, i.e., those project areas that the Board has identified as being of particular importance to the State courts this year. The selection of these categories was based on the Board and staff's experience and observations over the past year; the recommendations received from judges, court managers, lawyers, members of the public, and other groups interested in the administration of justice; and the issues identified in recent years' concept papers and applications.

Section II.B. of the Proposed Guideline includes the following Special Interest categories:

Improving Public Confidence in the Courts;

Education and Training for Judges and Other Key Court Personnel;

Dispute Resolution and the Courts;

Application of Technology;

Court Management, Financing, and Planning;

Substance Abuse and the Courts;

Children and Families in Court;

Improving the Courts' Response to Domestic Violence; and

The Relationship Between State and Federal Courts.

## Conferences

The Institute is soliciting proposals to conduct a National Conference on Improving the Adversary System. See section II.B.2.b.(4).

## Recommendations to Grantwriters

Recommendations to Grantwriters may be found in Appendix A.

The following Grant Guideline is proposed by the State Justice Institute for FY 2000:

## State Justice Institute Grant Guideline

### Table of Contents

I. The Mission of the State Justice Institute
II. Scope of the Program
III. Definitions
IV. Eligibility for Award
V. Types of Projects and Grants; Size of Awards
VI. Concept Paper Submission Requirements for New Projects
VII. Application Requirements for New Projects
VIII. Application Review Procedures
IX. Compliance Requirements
X. Financial Requirements
XI. Grant Adjustments
Appendix A Recommendations to Grant Writers
Appendix B Questions Frequently Asked by Grantees
Appendix C List of State Contacts Regarding Administration of Institute Grants to State and Local Courts
Appendix D SJI Libraries: Designated Sites and Contacts
Appendix E Illustrative List of Model Curricula
Appendix F Illustrative List of Replicable Projects
Appendix G State Justice Institute Scholarship Application Forms (Forms S1 and S2)
Appendix H Line-Item Budget Form (Form E)
Appendix I Certificate of State Approval Form (Form B)

### I. The Mission of the State Justice Institute

The Institute was established by Pub. L. 98–620 to improve the administration of justice in the State courts in the United States. Incorporated in the State of Virginia as a private, nonprofit corporation, the Institute is charged, by statute, with the responsibility to:

A. Direct a national program of financial assistance designed to assure that each citizen of the United States is provided ready access to a fair and effective system of justice;

B. Foster coordination and cooperation with the Federal judiciary;

C. Promote recognition of the importance of the separation of powers doctrine to an independent judiciary; and

D. Encourage education for judges and support personnel of State court systems through national and State organizations, including universities.

To accomplish these broad objectives, the Institute is authorized to provide funds to State courts, national organizations which support and are supported by State courts, national judicial education organizations, and other organizations that can assist in improving the quality of justice in the State courts.

The Institute is supervised by an 11-member Board of Directors appointed by the President, by and with the consent of the Senate. The Board is statutorily composed of six judges, a State court administrator, and four members of the public, no more than two of whom can be of the same political party.

Through the award of grants, contracts, and cooperative agreements, the Institute is authorized to perform the following activities:

A. Support research, demonstrations, special projects, technical assistance, and training to improve the administration of justice in the State courts;

B. Provide for the preparation, publication, and dissemination of information regarding State judicial systems;

C. Participate in joint projects with Federal agencies and other private grantors;

D. Evaluate or provide for the evaluation of programs and projects funded by the Institute to determine their impact upon the quality of criminal, civil, and juvenile justice and the extent to which they have contributed to improving the quality of justice in the State courts;

E. Encourage and assist in furthering judicial education;

F. Encourage, assist, and serve in a consulting capacity to State and local

justice system agencies in the development, maintenance, and coordination of criminal, civil, and juvenile justice programs and services; and

G. Be responsible for the certification of national programs that are intended to aid and improve State judicial systems.

## II. Scope of the Program

During FY 2000, the Institute will consider applications for funding support that address any of the areas specified in its enabling legislation. The Board, however, has designated nine program categories as being of special interest. See section II.B.

### *A. Authorized Program Areas*

The Institute is authorized to fund projects addressing one or more of the following program areas listed in the State Justice Institute Act, the Battered Women's Testimony Act, the Judicial Training and Research for Child Custody Litigation Act, and the International Parental Kidnapping Crime Act.

1. Assistance to State and local court systems in establishing appropriate procedures for the selection and removal of judges and other court personnel and in determining appropriate levels of compensation;
2. Education and training programs for judges and other court personnel for the performance of their general duties and for specialized functions, and national and regional conferences and seminars for the dissemination of information on new developments and innovative techniques;
3. Research on alternative means for using judicial and nonjudicial personnel in court decisionmaking activities, implementation of demonstration programs to test such innovative approaches, and evaluations of their effectiveness;
4. Studies of the appropriateness and efficacy of court organizations and financing structures in particular States, and support to States to implement plans for improved court organization and financing;
5. Support for State court planning and budgeting staffs and the provision of technical assistance in resource allocation and service forecasting techniques;
6. Studies of the adequacy of court management systems in State and local courts, and implementation and evaluation of innovative responses to records management, data processing, court personnel management, reporting and transcription of court proceedings, and juror utilization and management;
7. Collection and compilation of statistical data and other information on the work of the courts and on the work of other agencies which relates to and affects the work of courts;
8. Studies of the causes of trial and appellate court delay in resolving cases, and establishing and evaluating experimental programs for reducing case processing time;
9. Development and testing of methods for measuring the performance of judges and courts, and experiments in the use of such measures to improve the functioning of judges and the courts;
10. Studies of court rules and procedures, discovery devices, and evidentiary standards to identify problems with the operation of such rules, procedures, devices, and standards, and the development of alternative approaches to better reconcile the requirements of due process with the need for swift and certain justice, and testing of the utility of those alternative approaches;
11. Studies of the outcomes of cases in selected areas to identify instances in which the substance of justice meted out by the courts diverges from public expectations of fairness, consistency, or equity, and the development, testing, and evaluation of alternative approaches to resolving cases in such problem areas;
12. Support for programs to increase court responsiveness to the needs of citizens through citizen education, improvement of court treatment of witnesses, victims, and jurors, and development of procedures for obtaining and using measures of public satisfaction with court processes to improve court performance;
13. Testing and evaluating experimental approaches to provide increased citizen access to justice, including processes which reduce the cost of litigating common grievances, and alternative techniques and mechanisms for resolving disputes between citizens;
14. Collection and analysis of information regarding the admissibility and quality of expert testimony on the experiences of battered women offered as part of the defense in criminal cases under State law, as well as sources of and methods to obtain funds to pay costs incurred to provide such testimony, particularly in cases involving indigent women defendants;
15. Development of training materials to assist battered women, operators of domestic violence shelters, battered women's advocates, and attorneys to use expert testimony on the experiences of battered women in appropriate cases, and individuals with expertise in the experiences of battered women to develop skills appropriate to providing such testimony;
16. Research regarding State judicial decisions relating to child custody litigation involving domestic violence;
17. Development of training curricula to assist State courts to develop an understanding of, and appropriate responses to child custody litigation involving domestic violence;
18. Dissemination of information and training materials and provision of technical assistance regarding the issues listed in paragraphs 14–17 above;
19. Development of national, regional, and in-State training and educational programs dealing with criminal and civil aspects of interstate and international parental child abduction; and
20. Other programs, consistent with the purposes of the State Justice Institute Act, as may be deemed appropriate by the Institute, including projects dealing with the relationship between Federal and State court systems such as where there is concurrent State-Federal jurisdiction and where Federal courts, directly or indirectly, review State court proceedings.

Funds will not be made available for the ordinary, routine operation of court systems or programs in any of these areas.

### *B. Special Interest Program Categories*

#### 1. General Description

The Institute is interested in funding both innovative programs and programs of proven merit that can be replicated in other jurisdictions. Although applications in any of the statutory program areas are eligible for funding in FY 2000, the Institute is especially interested in funding projects that:

a. Formulate new procedures and techniques, or creatively enhance existing arrangements to improve the courts;

b. Address aspects of the State judicial systems that are in special need of serious attention;

c. Have national significance by developing products, services, and techniques that may be used in other States; and

d. Create and disseminate products that effectively transfer the information and ideas developed to relevant audiences in State and local judicial systems, or provide technical assistance to facilitate the adaptation of effective programs and procedures in other State and local jurisdictions.

A project will be identified as a Special Interest project if it meets the four criteria set forth above and (1) it

falls within the scope of the Special Interest program areas designated below, or (2) information coming to the attention of the Institute from the State courts, their affiliated organizations, the research literature, or other sources demonstrates that the project responds to another special need or interest of the State courts.

Concept papers and applications which address a Special Interest category will be accorded a preference in the rating process. (See the selection criteria listed in sections VI.C.2. and VIII.)

2. Specific Categories

The Board has designated the areas set forth below as Special Interest program categories. The order of listing does not imply any ordering of priorities among the categories. For a complete list of projects supported in previous years in each of these categories, please visit the Institute's Internet homepage at http://www.statejustice.org and click on Awarded Grants List.

*a. Improving Public Confidence in the Courts.* This category includes demonstration, evaluation, research, and education projects designed to improve the responsiveness of courts to public concerns regarding the fairness, equity, accessibility, timeliness, and comprehensibility of the court process, and test innovative methods for increasing the public's trust and confidence in the State courts.

(1) The Institute is particularly interested in supporting innovative projects that demonstrate and test methods to:

- Develop national strategies to promote the progress of State court task forces and other court-sponsored programs to eliminate race and ethnic bias in the courts, including national projects that would support planning and program development at the State and local level; develop products that highlight effective model programs and best practices; and educate judges and court personnel about relevant products developed in different States (e.g., model judicial education curricula, bench books, court conduct handbooks, codes of ethics, and relevant legislation);
- Address court-community problems resulting from the influx of legal and illegal immigrants, including projects to inform judges about the effects of recent Federal and State legislation regarding immigrants; design and assess procedures for use in custody, visitation, and other domestic relations cases when key family members or property are outside the United States; and develop protocols to facilitate service of process, the enforcement of orders of judgment, and the disposition of criminal and juvenile cases when a non-U.S. citizen or corporation is involved;
- Demonstrate and evaluate approaches to implement the concept of restorative justice, including methods for involving the community in the sentencing process;
- Identify and test the elements of successful long-term volunteer or other court-community collaborative programs;
- Educate and clearly communicate information to litigants and the public about judicial decisions, the trial and appellate court process, and court operations, and the standards courts maintain with respect to timeliness, access, and the elimination of bias; and
- Assure that judges and court employees meet the highest ethical standards and that judicial disciplinary procedures are known, fair, and effective.

(2) The Institute is interested in supporting projects that facilitate implementation of State and local plans developed at or as a result of the National Conference on Public Trust and Confidence in the Justice System held in Washington, D.C., on May 13–14, 1999. In particular, the Institute seeks to support projects that would:

- Compile and disseminate information about practices being used by courts around the country that show the promise of enhancing public trust and confidence in the justice system;
- Educate the public about the business of the courts and their role in the community;
- Examine the role of lawyers and their impact on public trust in the courts; and
- Test and evaluate technological approaches designed to enhance public access to the courts.

(3) The Institute also is interested in supporting State and local court projects to implement the action plans developed by the teams participating in the Institute-supported National Conference on Self-Represented Litigants Appearing in Court to be held in Scottsdale, Arizona, on November 18–21, 1999. Concept papers proposing such projects must be mailed by March 17, 2000, for consideration by the Institute's Board of Directors in May 2000. Applications based on these concept papers will be considered by the Board in July 2000. Applicants are advised that Institute funds may not be used to directly or indirectly support legal representation of individuals in specific cases.

*b. Education and Training for Judges and Other Key Court Personnel.* The Institute is interested in supporting an array of projects that will continue to strengthen and broaden the availability of court education programs at the State, regional, and national levels. This category is divided into four subsections: (1) Innovative Educational Programs; (2) Curriculum Adaptation Projects; (3) Scholarships; and (4) National Conferences.

(1) Innovative Educational Programs. This category includes support for the development and pilot-testing of innovative, high-quality educational programs for trial and appellate judges or court personnel that address key substantive and administrative issues of concern to the nation's courts, or help local courts or State court systems develop or enhance their capacity to deliver quality continuing education. Programs may be designed for presentation at the local, State, regional, or national level. Ordinarily, court education programs should be based on some form of assessment of the needs of the target audience; include clearly stated learning objectives that delineate the new knowledge or skills that participants will acquire (as opposed to a description of what will be taught); incorporate adult education principles and multiple teaching/learning methods; and result in the development of a disseminable curriculum as defined in section III.F.

(a) The Institute is particularly interested in the development of education programs that:

- Include innovative self-directed learning packages for use by appellate, trial, juvenile and family court judges and personnel, and distance-learning approaches for these audiences to assist those who do not have ready access to classroom-centered programs. These packages and approaches should include the appropriate use of various media and technologies such as Internet-based programming, interactive CD-ROM or computer disk-based programs, videos, or other audio and visual media, supported by written materials or manuals. They also should include a meaningful program evaluation and a self-evaluation process that assesses pre-and post-program knowledge and skills;
- Familiarize faculty with the effective use of instructional technology including methods for effectively presenting information through distance learning approaches including the Internet, videos, and satellite teleconferences;
- Assist local courts, State court systems, and court systems in a geographic region to develop or enhance a comprehensive program of continuing education, training, and career development for judges and court personnel as an integral part of court operations;
- Test the effectiveness of including a variety of experiential instructional approaches in judicial branch education programs such as field studies and interchanges with community programs, organizations, and institutions;
- Encourage intergovernmental team-building, collaboration, and planning among the judicial, executive, and legislative branches of government, or courts within a metropolitan area or multi-State region;
- Develop and test curricula on the specific knowledge and skills needed to manage drug court programs for adults, juveniles, or families;

- Develop and test innovative curricula designed to enhance trial and appellate judges' awareness and understanding of Federal and State environmental laws and the effect those laws have on court processes in the impacted jurisdictions;
- Develop and test innovative curricula and materials to educate appellate, trial, and juvenile and family court judges about adolescent and youth development, including the role and impact of youth culture (cults and gangs), and the impact that exposure to violence at home, in school, and in the community has on children;
- Develop and test innovative training programs to enhance the ability of court personnel to protect their safety and that of jurors, litigants, witnesses, and other members of the public in court facilities, and in managing cases involving individuals or organizations unwilling to cooperate with legal or administrative procedures;
- Develop and test innovative short (one-half or one full day) educational programs on events or issues of critical importance to local courts or courts in a particular region; and
- Develop and test methods to determine the cost-effectiveness of judicial branch education and training.

(b) The Institute is also very interested in supporting projects that would implement action plans and strategies developed by the State teams at the National Symposium on the Future of Judicial Branch Education that will be held in St. Louis, Missouri, on October 7–9, 1999, as well as proposals from other applicants designed to assist in implementing and disseminating the findings and strategies discussed at the Conference.

(c) The Institute also is interested in supporting the development and testing of curricula on issues of critical importance to the courts, including those listed in the other Special Interest categories described in this Chapter.

(2) Curriculum Adaptation Projects. The Board is reserving up to $160,000 to support projects that adapt a model curriculum previously developed with SJI funds and to pilot-test it to determine its appropriateness, quality, and effectiveness for inclusion in the jurisdiction's judicial branch education program. An illustrative but non-inclusive list of the curricula that may be appropriate for adaptation is contained in Appendix E.

The goal of the Curriculum Adaptation program is to provide State and local courts with sufficient support to modify a model curriculum, course module, or national or regional conference program developed with SJI funds to meet a particular State's or local jurisdiction's educational needs; pilot-test it to determine its appropriateness, quality, and effectiveness; and train instructors to present portions or all of the curriculum. It is anticipated that the adapted curriculum will become part of the grantee's ongoing educational offerings.

Only State or local courts may apply for Curriculum Adaptation funding. Application procedures may be found in Section VII.E.

(3) Scholarships for Judges and Court Personnel. The Institute is reserving up to $200,000 to support a scholarship program for State court trial and appellate court managers. The purposes of the Institute scholarship program are to:

- Enhance the skills, knowledge, and abilities of judges and court managers;
- Enable State court judges and court managers to attend out-of-State educational programs sponsored by national and State providers that they could not otherwise attend because of limited State, local and personal budgets; and
- Provide States, judicial educators, and the Institute with evaluative information on a range of judicial and court-related education programs.

Scholarships will be granted to individuals only for the purpose of attending an out-of-State educational program within the United States. Application procedures may be found in Section VII.F.

(4) National Conferences. This category includes support for national conferences on topics of major concern to State court trial and appellate judges and personnel across the nation. Applicants are encouraged to consider the use of videoconferences, the Internet, and other technologies to increase participation and limit travel expenses in planning and presenting conferences. In planning a conference, applicants should provide for a written, video, CD–ROM, or other product that would widely disseminate information, findings, and any recommendations resulting from the conference.

This year, the Institute is particularly interested in supporting a National Conference on Improvement of the Adversary System that would explore the fundamental assumptions underlying the adversary system, its strengths and weaknesses, and what steps can be taken to improve both the system and the public's perception of the system.

The many topics that such a conference could address include:

- The types of cases for which the adversary process may be the most appropriate and the least appropriate;
- Improving access to justice for poor and middle-income litigants;
- Methods for reducing trial length and expediting the trial process;
- The best ways of presenting, adjudicating, or otherwise resolving complex litigation;
- The education of trial counsel and litigants about settlement techniques and methods for determining the value of their cases;
- The use of special or blue-ribbon juries; and
- The use of technology to facilitate the resolution of disputes.

The conference should involve the participation of judges, attorneys, court managers, legal scholars, researchers, business leaders, citizen organizations, dispute resolution specialists, and media representatives.

*c. Dispute Resolution and the Courts.* This category includes research, evaluation, and demonstration projects to evaluate or enhance the effectiveness of court-connected dispute resolution programs. The Institute is interested in projects that facilitate comparison among research studies by using similar measures and definitions; address the nature and operation of ADR programs within the context of the court system as a whole; and compare dispute resolution processes to attorney settlement as well as trial. Specific topics of interest include:

- Examining the timing for referrals to dispute resolution services, and the effect of different referral methods, on case outcomes and time to disposition;
- Comparing the appropriateness and effectiveness of facilitative and evaluative mediation in various types of cases;
- Evaluating the effectiveness of the use of family group conferencing procedures in dependency, delinquency, and status offense cases;
- Evaluating innovative court-connected dispute resolution programs for resolving specific types of cases, such as minor criminal cases, probate proceedings, land-use disputes, and complex and multi-party litigation;
- Testing of procedures that courts can use to assure the quality of court-connected dispute resolution programs, including methods of establishing and maintaining competency standards, training standards, and other techniques for assuring program excellence;
- Testing innovative approaches involving community partnerships, particularly in the contexts of juvenile and restorative justice, and examining the benefits such partnerships offer in ensuring the quality of dispute resolution programs;
- Evaluating innovative applications of technology to facilitate dispute resolution processes; and
- Developing methods to eliminate race, ethnic, or gender bias in court connected dispute resolution programs, testing approaches for assuring that such programs are open to all members of the community served by the court, and assessing whether having a mediator pool that reflects the diversity of the community it serves has an

impact on the use of mediation by minorities and its effectiveness.

Applicants should be aware that the Institute will not provide operational support for on-going ADR programs or start-up costs of non-innovative ADR programs. Courts also should be advised that it is preferable for an applicant to use its own funds to support the operational costs of an innovative program and request Institute funds to support related technical assistance, training, and evaluation elements of the program.

*d. Application of Technology.* This category includes the testing of innovative applications of technology to improve the operation of court management systems and judicial practices at both the trial and appellate court levels.

The Institute seeks to support local experiments with promising but untested applications of technology in the courts that include an evaluation of the impact of the technology in terms of costs, benefits, and staff workload, and a training component to assure that staff is appropriately educated about the purpose and use of the new technology. In this context, untested includes novel applications of technology developed for the private sector that have not previously been applied to the courts.

The Institute is particularly interested in supporting efforts to:

- Test and evaluate technologies that, if successfully implemented, would significantly re-engineer the way that courts currently do business;
- Test and evaluate technological innovations in the jury room to enhance jurors' deliberations;
- Develop and test standards governing electronic access to court records by the public;
- Evaluate approaches for electronically filing pleadings, briefs, and other documents; approaches to integrate electronic filing and electronic document management; and the impact of electronic court record systems on case management and court procedures;
- Develop model rules or standards to govern the use of electronic filing and electronic court records;
- Test innovative telecommunications links among courts, and between courts and executive branch or private agencies and services;
- Test innovative applications of voice recognition technology by judges and clerks in the adjudication process;
- Demonstrate and evaluate the use of technology to assist judicial decisionmaking;
- Evaluate the use of digital audio and video technology for making a record of court proceedings;
- Demonstrate and evaluate the use of videoconferencing technology to present testimony by witnesses in remote locations, and appellate arguments (but see the limitations specified below);
- Assess the impact of the use of multimedia CD–ROM-based briefs on the courts, parties, counsel, and the trial or appellate process; and
- Evaluate innovative applications of technology designed to prevent courthouse incidents that endanger the lives and property of judges, court personnel, and courtroom participants.

Ordinarily, the Institute will not provide support for the purchase of equipment or software to implement a technology that is commonly used by courts, such as videoconferencing between courts and jails, optical imaging for recordkeeping, and automated management information systems. (See also section X.I.2.b. regarding other limits on the use of grant funds to purchase equipment and software.)

*e. Court Planning, Management, Financing.* The Institute is interested in supporting projects that explore emerging issues that will affect the State courts as they enter the 21st Century, as well as projects that develop and test innovative approaches for managing the courts, and securing, managing, and demonstrating the effective use of the resources required to fully meet the responsibilities of the judicial branch, and institutionalizing long-range planning processes.

(1) In particular, the Institute is interested in demonstration, evaluation, education, research, and technical assistance projects to:

- Facilitate communication, information-sharing, and coordination between the juvenile and criminal courts;
- Assess the effects of innovative management approaches designed to assure quality services to court users;
- Strengthen the judge's and court manager's skills in leadership, planning, and building community confidence in the courts;
- Enhance the core competencies required of court managers and staff;
- Facilitate and implement change and encourage excellence in court operations;
- Demonstrate and assess the effective use of staff teams in court operations; and
- Prevent harassment, threats, and incidents endangering the lives and property of judges, court employees, jurors, litigants, witnesses, and other members of the public in court facilities.

(2) In addition, the Institute is interested in a research and evaluation project that would analyze and assess the impact of the ''future and the courts'' activities that have been conducted over the past decade; identify the reasons why some States have been more successful than others in implementing change; assess what steps can be taken or methods developed to facilitate the recommended changes that are still appropriate; more fully institutionalize long-range planning by State court systems and, where appropriate, local courts; and assist each State court system or local court in developing the capacity to identify future trends that may significantly affect its ability to deliver justice.

*f. Substance Abuse.* This category includes education, technical assistance, research, and evaluation projects to assist courts in handling a large volume of substance abuse-related criminal, civil, juvenile, and domestic relations cases fairly and expeditiously. (It does not include providing support for planning, establishing, operating, or enhancing a local drug court. Applicants interested in obtaining grants to plan, implement, operate, or enhance a drug court program should contact the Drug Court Program Office, Office of Justice Programs, U.S. Department of Justice.)

The Institute is particularly interested in projects to:

- Evaluate the effectiveness of ''family drug court'' programs (i.e., specialized calendars that provide intensely supervised, court-enforced substance abuse treatment and other services to families involved in child neglect, child abuse, domestic violence, or other family cases);
- Evaluate the effectiveness of re-entry drug courts on the management of drug offenders' behavior following their release from incarceration and the impact of this additional responsibility on court operation and caseload management;
- Develop and test effective approaches for identifying and treating substance abuse by judges, lawyers, and court staff, and determining and lessening the impact on the courts of such substance abuse;
- Document public sector and private sector managed care programs that effectively provide court-ordered treatment and other services to adults and juveniles; and
- Develop and test State, regional, and local educational programs for judges and court staff on the implications of managed care for the provision of drug and alcohol treatment, mental health treatment, and other services to adult and juvenile offenders, neglected and abused children and their families, and persons subject to civil commitment.

*g. Children and Families in Court.* This category includes education, demonstration, evaluation, technical assistance, and research projects to identify and inform judges of innovative, effective approaches for handling cases involving children and families. The Institute is particularly interested in projects to:

- Develop and test innovative protocol, procedures, educational programs, and other measures to determine and address the service needs of children exposed to family violence and the methods for mitigating

those effects when issuing protection, custody, visitation, or other orders;

- Assess the impact of procedures to determine whether improper investigatory techniques may have suggested children's testimony (e.g., ''taint hearings'') on the speed and fairness of child sexual abuse trials;
- Develop and test guidelines, curricula, and other materials to assist judges in establishing and enforcing custody and support orders in cases in which a child's parents were never married to each other;
- Develop guidelines and materials to assist judges and other court officers and personnel in critically analyzing psychological evaluations of children and the credibility of clinical experts, their reports, and methods of evaluating children;
- Compile and distribute information about innovative and successful approaches to sentencing and treatment alternatives for serious youthful offenders;
- Develop and test procedures and programs that include victims of offenses committed by juveniles in the juvenile court process (other than victim-offender mediation programs);
- Create and test educational programs, guidelines, and monitoring systems to assure that the juvenile justice system meets the needs of girls and children of color;
- Develop and test innovative techniques for improving communication, sharing information, and coordinating juvenile and criminal courts and divisions;
- Design or evaluate information systems that not only provide aggregate data, but also are able to track individual cases, individual juveniles, and specific families, so that judges and court managers can manage their caseloads effectively, track placement and service delivery, and coordinate orders in different proceedings involving members of the same family; and
- Develop and test educational programs to assure that everyone coming into contact with courts serving children and families is treated with dignity, respect, and courtesy.

*h. Improving the Courts' Response to Domestic Violence.* This category includes innovative education, demonstration, technical assistance, evaluation, and research projects to improve the fair and effective processing, consideration, and disposition of cases concerning domestic violence and gender-related violent crimes, including projects to:

Train custody evaluators, guardians ad litem, and other independent professionals appearing in custody and visitation cases about domestic violence and the impact witnessing such violence has on children;

- Coordinate juvenile, family, and criminal court management of domestic violence cases;
- Evaluate the effectiveness of domestic violence courts (i.e., specialized calendars or divisions for considering domestic violence cases and related matters), including their impact on victims, offenders, and court operations;
- Assess the effectiveness of including jurisdiction over family violence in a unified family court;
- Demonstrate effective ways to coordinate the response to domestic violence and gender-related crimes of violence among courts, criminal justice agencies, and social services programs, and to assure that courts are fully accessible to victims of domestic violence and other gender-related violent crimes; Develop and test methods for facilitating recognition and enforcement of protection orders issued by a State, Federal, or tribal court in another jurisdiction;
- Determine the effective use of information contained in protection order files stored in court electronic databases, consistent with the protection of the privacy and safety of victims of violence;
- Test the effectiveness of innovative sentencing and treatment approaches in cases involving domestic violence and other gender-related crimes including sentences that incorporate restorative justice measures; and
- Implement and train judges and court personnel on recommended protocols and procedures identified at the National Summit on Fatality Reviews held on October 25–27, 1998, in Key West, Florida. Recommendations from the Summit and an educational module are available from your in-state library or from the National Council of Juvenile and Family Court Judges' Family Violence Department (1–800–527–3223).

Institute funds may not be used to provide operational support to programs offering direct services or compensation to victims of crimes. (Applicants interested in obtaining such operational support should contact the Office for Victims of Crime (OVC), Office of Justice Programs, U.S. Department of Justice, or the agency in their State that awards OVC funds to State and local victim assistance and compensation programs.)

*i. The Relationship Between State and Federal Courts.* This category includes education, research, demonstration, and evaluation projects designed to facilitate appropriate and effective communication, cooperation, and coordination between State and Federal courts. The Institute is particularly interested in innovative projects that:

(1) Develop and test curricula and disseminate information regarding effective methods being used at the trial court, State, and circuit levels to coordinate cases and administrative activities, and share facilities; and

(2) Develop and test new approaches to:

(a) Implement the habeas corpus provisions of the Anti-Terrorism Act of 1996;

(b) Handle capital habeas corpus cases fairly and efficiently;

(c) Coordinate and process mass tort cases fairly and efficiently at the trial and appellate levels;

(d) Coordinate cases in which there is concurrent jurisdiction including State and Federal cases brought under the Violence Against Women Act;

(e) Develop a guidebook for judges to assist in determining whether punitive damages should be awarded, calculating the amount in which they should be awarded, and instructing jurors regarding these issues;

(f) Exchange information and coordinate calendars among State and Federal courts; and

(g) Share facilities, jury pools, alternative dispute resolution programs, information regarding persons on pretrial release or probation, and court services.

*C. ''Think Pieces''*

This category addresses the development of essays of publishable quality directed to the court community. The essays should explore emerging issues that could result in significant changes in court process or judicial administration and their implications for judges, court managers, policy-makers, and the public. Grants supporting such projects are limited to no more than $10,000. Applicants should follow the procedures for concept papers requesting an accelerated award of a grant of less than $40,000, which are explained in Section VI.3.(b) of this Guideline.

Possible topics include, but are not limited to:

- The implications of changing expectations about the proper role of judges—from adjudicators to problem-solvers—on court procedures, court operations, and judicial selection;
- A re-examination of judicial ethics as they relate to the evolving role of the judge as ''off-the-bench'' problem-solver, e.g., participating in domestic violence or other local coordinating councils, working with State legislatures, and collaborating with community groups;
- The potential use of local court advisory councils rooted in the community as a method of promoting public trust and confidence in the court;
- The implications of increasing commerce via the Internet for the State courts, including unique problems that may arise and the new rules and procedures that may be needed to address them;
- An exploration of issues related to privacy, data security, and public access to court records in our increasingly technological society; and
- The potential for the creation of ''cyber-courts'' through the use of the Internet—a ''courthouse-less court'' instead of a paperless court—and how the courts would have to be re-engineered to accommodate such a development.

*D. Single Jurisdiction Projects*

The Board will set aside up to $300,000 to support projects proposed by State or local courts that address the needs of only the applicant State or local jurisdiction. A project under this section may address any of the topics included in the Special Interest Categories or Statutory Program Areas, but it need not be innovative. The Board is particularly interested in supporting projects to replicate programs, procedures, or strategies that have been developed, demonstrated, or evaluated through an SJI grant. (A list of examples of such grants is contained in Appendix F.) Grants to support replications are subject to the same limits on amount and duration as other project grants. (See section V.) Ordinarily, the Institute will not provide support solely for the purchase of equipment or software.

Concept papers for single jurisdiction projects may be submitted by a State court system, an appellate court, or a limited or general jurisdiction trial court. All awards under this category are subject to the matching requirements set forth in section IX.A.7.a.

The application procedures for Single Jurisdiction grants are the same as the procedures for Project Grants. See Section VII.A.

*E. Technical Assistance Grants*

The Board will set aside up to $400,000 to support the provision of technical assistance to State and local courts. The program is designed to provide State and local courts with sufficient support to obtain technical assistance to diagnose a problem, develop a response to that problem, and initiate implementation of any needed changes. The exact amount to be awarded for these grants will depend on the number and quality of the applications submitted in this category and other categories of the Guideline. The Committee will reserve sufficient funds each quarter to assure the availability of technical assistance grants throughout the year.

Technical Assistance grants are limited to no more than $30,000 each, and may cover the cost of obtaining the services of expert consultants; travel by a team of officials from one court to examine a practice, program, or facility in another jurisdiction that the applicant court is interested in replicating; or both. Technical assistance grant funds ordinarily may not be used to support production of a videotape. Normally, the technical assistance must be completed within 12 months after the start-date of the grant.

Only a State or local court may apply for a Technical Assistance grant. The application procedures may be found in section VII.D.

**III. Definitions**

The following definitions apply for the purposes of this Guideline:

*A. Accelerated Award*

A grant of up to $40,000 awarded on the basis of a concept paper (including a budget and budget narrative) when the need for and benefits of the proposed project are clear and an application would not be needed to provide additional information about the project's methodology and budget. See section VI.C.1. for a more complete description of the criteria to approve an accelerated award.

*B. Acknowledgment of SJI Support*

The prominent display of the SJI logo on the front cover of a written product or in the opening frames of a videotape developed with Institute support, and inclusion of a brief statement on the inside front cover or title page of the document or the opening frames of the videotape identifying the grant number. See section IX.A.10. for precise wording of the statement.

*C. Application*

A formal request for an Institute grant that is invited by the Board of Directors after approval of a concept paper. A complete application consists of: Form A—Application; Form B—Certificate of State Approval (for applications from local trial or appellate courts or agencies); Form C—Project Budget/Tabular Format or Form C1—Project Budget/Spreadsheet Format; Form D—Assurances; Disclosure of Lobbying Activities; a detailed 25-page description of the need for the project and all related tasks, including the time frame for completion of each task, and staffing requirements; and a detailed budget narrative that provides the basis for all costs. See section VII. for a complete description of application submission requirements.

*D. Concept Paper*

A proposal of no more than eight double-spaced pages that outlines the nature and scope of a project that would be supported with State Justice Institute funds, accompanied by a preliminary budget. See section VI. for a complete description of concept paper submission requirements.

*E. Continuation Grant*

A grant lasting no longer than 15 months to permit completion of activities initiated under an existing Institute grant or enhancement of the products or services produced during the prior grant period. See section VII.B. for a complete description of continuation application requirements.

*F. Curriculum*

The materials needed to replicate an education or training program developed with grant funds including, but not limited to: the learning objectives; the presentation methods; a sample agenda or schedule; an outline of presentations and relevant instructors' notes; copies of overhead transparencies or other visual aids; exercises, case studies, hypotheticals, quizzes, and other materials for involving the participants; background materials for participants; evaluation forms; and suggestions for replicating the program including possible faculty or the preferred qualifications or experience of those selected as faculty.

*G. Curriculum Adaptation Grant*

A grant of up to $20,000 to support an adaptation and pilot test of an educational program previously developed with SJI funds. See section VII.E. for a complete description of curriculum grant application requirements.

*H. Designated Agency or Council*

The office or judicial body which is authorized under State law or by delegation from the State Supreme Court to approve applications for funds and to receive, administer, and be accountable for those funds.

*I. Disclaimer*

A brief statement that must be included at the beginning of a document or in the opening frames of a videotape produced with State Justice Institute funding that specifies that the points of view expressed in the document or tape do not necessarily represent the official position or policies of the Institute. See section IX.A.10 for the precise wording of this statement.

*J. Grant Adjustment*

A change in the design or scope of a project from that described in the approved application, acknowledged in writing by the Institute. See section XI.A for a list of the types of changes requiring a formal grant adjustment.

*K. Grantee*

The organization, entity, or individual to which an award of Institute funds is made. For a grant based on an application from a State or local court, grantee refers to the State Supreme Court or its designee.

*L. Human Subjects*

Individuals who are participants in an experimental procedure or who are asked to provide information about themselves, their attitudes, feelings, opinions, and/or experiences through an interview, questionnaire, or other data collection technique.

*M. Institute*

The State Justice Institute.

*N. Match*

The portion of project costs not borne by the Institute. Match includes both in-kind and cash contributions. Cash match is the direct outlay of funds by the grantee to support the project. In-kind match consists of contributions of time, services, space, supplies, etc., made to the project by the grantee or others (e.g., advisory board members) working directly on the project. Under normal circumstances, allowable match may be incurred only during the project period. When appropriate, and with the prior written permission of the Institute, match may be incurred from the date of the Board of Directors' approval of an award. Match does not include project-related income such as tuition or revenue from the sale of grant products, or the time of participants attending an education program. Amounts contributed as cash or in-kind match may not be recovered through the sale of grant products during or following the grant period.

*O. On-Going Support Grant*

A grant lasting 36 months to support a project that is national in scope and that provides the State courts with services, programs or products for which there is a continuing important need. See section VIII.B. for a complete description of on-going support application requirements.

*P. Products*

Tangible materials resulting from funded projects including, but not limited to: curricula; curriculum guidelines; monographs; reports; books; articles; manuals; handbooks; benchbooks; guidelines; videotapes; audiotapes; computer software; and CD–ROM disks.

*Q. Project Grant*

An initial grant lasting up to 15 months to support an innovative education, research, demonstration, or technical assistance project that can improve the administration of justice in State courts nationwide. Ordinarily, a project grant may not exceed $200,000 a year; however, a grant in excess of $150,000 is likely to be rare and awarded only to support highly promising projects that will have a significant national impact. See section VII.A. for a complete description of project grant application requirements.

*R. Project-Related Income*

Interest, royalties, registration and tuition fees, proceeds from the sale of products, and other earnings generated as a result of a State Justice Institute grant. Project-related income may not be counted as match. For a more complete description of different types of project-related income, see section X.G.

*S. Scholarship*

A grant of up to $1,500 awarded to a judge or court employee to cover the cost of tuition for and transportation to and from an out-of-State educational program within the United States. See section VII.F. for a complete description of scholarship application requirements.

*T. Single Jurisdiction Project Grant*

A grant that addresses a critical but not necessarily innovative need of a single State or local jurisdiction that cannot be met solely with State and/or local resources within the foreseeable future. See section II.D. for a description of single jurisdiction projects and section VI. and VII.A. for a complete description of single jurisdiction project application requirements.

*U. Special Condition*

A requirement attached to a grant award that is unique to a particular project.

*V. State Supreme Court*

The highest appellate court in a State, or, for the purposes of the Institute program, a constitutionally or legislatively established judicial council that acts in place of that court. In States having more than one court with final appellate authority, State Supreme Court shall mean that court which also has administrative responsibility for the State's judicial system. State Supreme Court also includes the office of the court or council, if any, it designates to perform the functions described in this Guideline.

*W. Subgrantee*

A State or local court which receives Institute funds through the State Supreme Court.

*X. Technical Assistance Grant*

A grant, lasting up to 12 months, of up to $30,000 to a State or local court to support outside expert assistance in diagnosing a problem and developing and implementing a response to that problem. See section VII.D. for a complete description of technical assistance grant application requirements.

## IV. Eligibility for Award

The Institute is authorized by Congress to award grants, cooperative agreements, and contracts to State and local courts and their agencies (42 U.S.C. 10705(b)(1)(A)); national nonprofit organizations controlled by, operating in conjunction with, and serving the judicial branches of State governments (42 U.S.C. 10705(b)(1)(B)); and national nonprofit organizations for the education and training of judges and support personnel of the judicial branch of State governments (42 U.S.C. 10705(b)(1)(C)).

An applicant is considered a national education and training applicant under section 10705(b)(1)(C) if: (1) the principal purpose or activity of the applicant is to provide education and training to State and local judges and court personnel; and (2) the applicant demonstrates a record of substantial experience in the field of judicial education and training.

The Institute also is authorized to make awards to other nonprofit organizations with expertise in judicial administration, institutions of higher education, individuals, partnerships, firms, corporations, and private agencies with expertise in judicial administration, provided that the objectives of the project can be served better (42 U.S.C. 10705(b)(2)). In making this judgment, the Institute will consider the likely replicability in jurisdictions around the country of the methodology and results of the projects proposed by these applicants. For-profit organizations are also eligible for grants and cooperative agreements; however, they must waive their fees.

The Institute may also make awards to Federal, State or local agencies and institutions other than courts for services that cannot be adequately provided through nongovernmental arrangements.

In addition, the Institute may enter into inter-agency agreements with other public or private funders to support projects consistent with the purpose of the State Justice Institute Act.

Each application for funding from a State or local court must be approved, consistent with State law, by the State's Supreme Court or its designated agency or council. The latter shall receive all Institute funds awarded to such courts and be responsible for assuring proper administration of Institute funds, in accordance with section X.C.2. of this Guideline. A list of persons to contact

in each State regarding approval of applications from State and local courts and administration of Institute grants to those courts is contained in Appendix C.

## V. Types of Projects and Grants; Size of Awards

*A. Types of Projects*

The Institute supports the following general types of projects:

1. Education and training;
2. Research and evaluation;
3. Demonstration; and
4. Technical assistance.

*B. Types of Grants*

The Institute supports the following types of grants:

1. Project Grants.

See sections II.B. and D., VI., and VII.A. The Institute places no annual limitations on the overall number of project grant awards or the number of awards in each special interest category.

2. Continuation Grants.

See sections III.E. and VII.B. In FY 2000, the Institute is allocating no more than 25% of available grant funds for continuation and on-going support grants.

3. On-going Support Grants.

See sections III.O. and VII.C. See Continuation Grants above for limitations on funding availability in FY 2000.

4. Technical Assistance Grants

See section II.E. In FY 2000, the Institute is reserving up to $400,000 for these grants.

5. Curriculum Adaptation Grants.

See sections II.B.2.b.(2), III.G., and VII.E. In FY 2000, the Institute is reserving up to $100,000 for adaptations of curricula previously developed with SJI funding.

6. Scholarships.

See section II.B.2.b.(3), III.S, and VII.F. In FY 2000, the Institute is reserving up to $200,000 for scholarships for judges and court employees. The Institute will reserve sufficient funds each quarter to assure the availability of scholarships throughout the year.

*C. Maximum Size of Awards*

1. Except as specified below, applicants for new project grants and continuation grants may request funding in amounts up to $200,000 for 15 months, although new and continuation awards in excess of $150,000 are likely to be rare and to be made, if at all, only for highly promising proposals that will have a significant impact nationally.

2. Applicants for on-going support grants may request funding in amounts up to $600,000 over three years, although awards in excess of $450,000 are likely to be rare. The Institute will ordinarily release funds for the second and third years of on-going support grants on the following conditions: (1) the project is performing satisfactorily; (2) appropriations are available to support the project that fiscal year; and (3) the Board of Directors determines that the project continues to fall within the Institute's priorities.

3. Applicants for technical assistance grants may request funding in amounts up to $30,000.

4. Applicants for curriculum adaptation grants may request funding in amounts up to $20,000.

5. Applicants for scholarships may request funding in amounts up to $1,500.

*D. Length of Grant Periods*

1. Grant periods for all new and continuation projects ordinarily may not exceed 15 months.

2. Grant periods for on-going support grants ordinarily may not exceed 36 months.

3. Grant periods for technical assistance grants and curriculum adaptation grants ordinarily may not exceed 12 months.

## VI. Concept Papers

Concept papers are an extremely important part of the application process because they enable the Institute to learn the program areas of primary interest to the courts and to explore innovative ideas, without imposing heavy burdens on prospective applicants. The use of concept papers also permits the Institute to better project the nature and amount of grant awards. The concept paper requirement and the submission deadlines for concept papers and applications may be waived by the Executive Director for good cause (e.g., the proposed project could provide a significant benefit to the State courts or the opportunity to conduct the project did not arise until after the deadline).

*A. Format and Content*

All concept papers must include a cover sheet, a program narrative, and a preliminary budget.

1. The Cover Sheet

The cover sheet for all concept papers must contain:

a. A title that clearly describes the proposed project;

b. The name and address of the court, organization, or individual submitting the paper;

c. The name, title, address (if different from that in b.), and telephone number of a contact person who can provide further information about the paper;

d. The letter of the Special Interest Category (see section II.B.2.) or the number of the statutory Program Area (see section II.A.) that the proposed project addresses most directly; and

e. The estimated length of the proposed project.

Applicants requesting the Board to waive the application requirement and approve a grant of less than $40,000 based on the concept paper should add APPLICATION WAIVER REQUESTED to the information on the cover page.

2. The Program Narrative

The program narrative of a concept paper should be no longer than necessary, but must not exceed eight (8) double-spaced pages on 8½ by 11 inch paper. Margins must be at least 1 inch and type size must be at least 12 point and 12 cpi. The pages should be numbered. The narrative should describe:

*a. Why is this project needed and how would it benefit State courts?* If the project is to be conducted in a specific location(s), applicants should discuss the particular needs of the project site(s) to be addressed by the project, why those needs are not being met through the use of existing materials, programs, procedures, services, or other resources, and the benefits that would be realized by the proposed site(s).

If the project is not site-specific, applicants should discuss the problems that the proposed project would address, why existing materials, programs, procedures, services, or other resources cannot adequately resolve those problems, and the benefits that would be realized from the project by State courts generally.

*b. What would be done if a grant is awarded?* Applicants should include a summary description of the project to be conducted and the approach to be taken, including the anticipated length of the grant period. Applicants requesting a waiver of the application requirement for a grant of less than $40,000 should explain the proposed methods for conducting the project as fully as space allows, and include a detailed task schedule as an attachment to the concept paper.

*c. How would the effects and quality of the project be determined?* Applicants should include a summary description of how the project would be evaluated, including the criteria that would be used to measure its success or impact.

*d. How would others find out about the project and be able to use the results?* Applicants should describe the

products that would result, the degree to which they would be applicable to courts across the nation, and to whom the products and results of the project would be disseminated in addition to the SJI-designated libraries (e.g., State chief justices, specified groups of trial judges, State court administrators, specified groups of trial court administrators, State judicial educators, or other audiences).

3. The Budget

*a. Preliminary Budget.* A preliminary budget must be attached to the narrative that includes the information specified on Form E included in Appendix H of this Guideline. Applicants should be aware that prior written Institute approval is required for any consultant rate in excess of $300 per day and that Institute funds may not be used to pay a consultant in excess of $900 per day.

*b. Concept Papers Requesting Accelerated Award of a Grant of Less than $40,000.* Applicants requesting a waiver of the application requirement and approval of a grant based on a concept paper under C. in this section must attach to Form E (see Appendix H) a budget narrative that explains the basis for each of the items listed and indicates whether the costs would be paid from grant funds, through a matching contribution, or from other sources. Courts requesting an accelerated award must also attach a Certificate of State Approval—Form B (Appendix I) signed by the Chief Justice of the State Supreme Court or the Chief Justice's designee.

4. Letters of Cooperation or Support

The Institute encourages concept paper applicants to attach letters of cooperation and support from the courts and related agencies that would be involved in or directly affected by the proposed project. Letters of support may be sent under separate cover; however, to ensure sufficient time to bring them to the Board's attention, support letters sent under separate cover must be received no later than January 5, 2000.

5. Page Limits

a. The Institute will not accept concept papers with program narratives exceeding eight double-spaced pages (see A.2. of this section). This page limit does not include the cover page, budget form, the budget narrative (for papers requesting consideration for accelerated awards), the task schedule (for papers requesting accelerated awards), and any letters of cooperation or endorsements. Additional material should not be attached unless it is essential to impart a clear understanding of the project.

b. Applicants submitting more than one concept paper may include material that would be identical in each concept paper in a cover letter. This material will be incorporated by reference into each paper and counted against the eight-page limit for each. A copy of the cover letter should be attached to each copy of each concept paper.

6. Sample Concept Papers

Sample concept papers from previous funding cycles are available from the Institute upon request.

*B. Submission Requirements*

With the exception of papers following up on the National Conference on Pro Se Litigants Appearing in Court, an original and three copies of all concept papers submitted for consideration in Fiscal Year 2000—including those proposing projects emanating from the National Summit on Fatality Reviews held in October 1998; the National Conference on Public Trust and Confidence in the Justice System held in May 1999; and the National Symposium on the Future of Judicial Branch Education scheduled for October 1999—must be sent by first class or overnight mail or by courier (but not by fax or e-mail) no later than November 24, 1999.

Concept papers following up on the National Conference on Pro Se Litigants Appearing in Court must be sent by first class or overnight mail or by courier by March 17, 2000.

A postmark or courier receipt will constitute evidence of the submission date. All envelopes containing concept papers should be marked CONCEPT PAPER and sent to: State Justice Institute, 1650 King Street, Suite 600, Alexandria, Virginia 22314.

Receipt of each concept paper will be acknowledged by the Institute in writing. Extensions of the deadlines for submission of concept papers will not be granted.

*C. Institute Review*

1. Review Process

Concept papers will be reviewed competitively by the Institute's Board of Directors. Institute staff will prepare a narrative summary and a rating sheet assigning points for each relevant selection criterion for those concept papers which fall within the scope of the Institute's funding program and merit serious consideration by the Board. Staff will also prepare a list of those papers that, in the judgment of the Executive Director, propose projects that lie outside the scope of the Institute's program or are not likely to merit serious consideration by the Board. The narrative summaries, rating sheets, and list of non-reviewed papers will be presented to the Board for its review. Committees of the Board will review concept paper summaries within assigned program areas and prepare recommendations for the full Board. The full Board of Directors will then decide which concept paper applicants will be invited to submit formal applications for funding. The decision to invite an application is solely that of the Board of Directors.

The Board may waive the application requirement and approve a grant based on a concept paper for a project requiring less than $40,000 when the need for and benefits of the project are clear and the methodology and budget require little additional explanation. Applicants considering whether to request consideration for an accelerated award should make certain that the proposed budget is sufficient to accomplish the project objectives in a quality manner. Because the Institute's experience has been that projects to conduct empirical research or a program evaluation ordinarily require a more thorough explanation of the methodology to be used than can be provided within the space limitations of a concept paper, the Board is unlikely to waive the application requirement for such projects.

2. Selection Criteria

a. All concept papers will be evaluated on the basis of the following criteria:

(1) The demonstration of need for the project;

(2) The soundness and innovativeness of the approach described;

(3) The benefits to be derived from the project;

(4) The reasonableness of the proposed budget;

(5) The proposed project's relationship to one of the ''Special Interest'' categories set forth in section II.B; and

(6) The degree to which the findings, procedures, training, technology, or other results of the project can be transferred to other jurisdictions.

Single jurisdiction concept papers will be rated on the proposed project's relation to one of the ''Special Interest'' categories set forth in section II.B. and the special requirements listed in section II.D. and VII.A.

b. In determining which concept papers will be approved for award or selected for development into full applications, the Institute will also consider the availability of financial assistance from other sources for the

project; the amount and nature (cash or in-kind) of the applicant's anticipated match; whether the applicant is a State court, a national court support or education organization, a non-court unit of government, or another type of entity eligible to receive grants under the Institute's enabling legislation (see 42 U.S.C. 10705(b)), as amended, and section IV of this Grant Guideline); the extent to which the proposed project would also benefit the Federal courts or help the State courts enforce Federal constitutional and legislative requirements, and the level of appropriations available to the Institute in the current year and the amount expected to be available in succeeding fiscal years.

3. Notification to Applicants

The Institute will send written notice to all persons submitting concept papers, informing them of the Board's decisions regarding their papers and of the key issues and questions that arose during the review process. A decision by the Board not to invite an application may not be appealed, but applicants may resubmit the concept paper or a revision thereof in a subsequent funding cycle. The Institute will also notify the relevant State contact (all of whom are listed in Appendix C) when the Board invites applications submitted by courts within that State or that specify a participating site within that State.

## VII. Applications

An application for Institute funding must include an application form; budget forms (with appropriate documentation); a project abstract and program narrative; a disclosure of lobbying form, when applicable; and certain certifications and assurances. The required application forms will be sent to applicants invited to submit a full application. Applicants may photocopy the forms to make completion easier.

*A. Project Grants*

1. Forms

*a. Application Form (FORM A).* The application form requests basic information regarding the proposed project, the applicant, and the total amount of funding requested from the Institute. It also requires the signature of an individual authorized to certify on behalf of the applicant that the information contained in the application is true and complete; that submission of the application has been authorized by the applicant; and that if funding for the proposed project is approved, the applicant will comply with the requirements and conditions of the award, including the assurances set forth in Form D.

*b. Certificate of State Approval (FORM B).* An application from a State or local court must include a copy of FORM B signed by the State's Chief Justice or Chief Judge, the director of the designated agency, or the head of the designated council. The signature denotes that the proposed project has been approved by the State's highest court or the agency or council it has designated. It denotes further that if funding for the project is approved by the Institute, the court or the specified designee will receive, administer, and be accountable for the awarded funds.

*c. Budget Forms (FORM C or C1).* Applicants may submit the proposed project budget either in the tabular format of FORM C or in the spreadsheet format of FORM C1. Applicants requesting $100,000 or more are strongly encouraged to use the spreadsheet format. If the proposed project period is for more than a year, a separate form should be submitted for each year or portion of a year for which grant support is requested, as well as for the total length of the project.

In addition to FORM C or C1, applicants must provide a detailed budget narrative providing an explanation of the basis for the estimates in each budget category. (See 4. below in this section.)

If funds from other sources are required to conduct the project, either as match or to support other aspects of the project, the source, current status of the request, and anticipated decision date must be provided.

*d. Assurances (FORM D).* This form lists the statutory, regulatory, and policy requirements with which recipients of Institute funds must comply.

*e. Disclosure of Lobbying Activities.* Applicants other than units of State or local government are required to disclose whether they, or another entity that is part of the same organization as the applicant, have advocated a position before Congress on any issue, and to identify the specific subjects of their lobbying efforts. (See section IX.A.6.)

2. Project Abstract

The abstract should highlight the purposes, goals, methods and anticipated benefits of the proposed project. It should not exceed 1 single-spaced page on 8½ by 11 inch paper.

3. Program Narrative

The program narrative for an application may not exceed 25 double-spaced pages on 8½ by 11 inch paper. Margins must be at least 1 inch, and type size must be at least 12-point and 12 cpi. The pages should be numbered. This page limit does not include the forms, the abstract, the budget narrative, and any appendices containing resumes and letters of cooperation or endorsement. Additional background material should be attached only if it is essential to impart a clear understanding of the proposed project. Numerous and lengthy appendices are strongly discouraged.

The program narrative should address the following topics:

*a. Project Objectives.* The applicant should include a clear, concise statement of what the proposed project is intended to accomplish. In stating the objectives of the project, applicants should focus on the overall programmatic objective (e.g., to enhance understanding and skills regarding a specific subject, or to determine how a certain procedure affects the court and litigants) rather than on operational objectives (e.g., provide training for 32 judges and court managers, or review data from 300 cases).

*b. Program Areas to be Covered.* The applicant should note the Special Interest Category or Categories that are addressed by the proposed project (see section II.B.). If the proposed project does not fall within one of the Institute's Special Interest Categories, the applicant should list the Statutory Program Area or Areas that are addressed by the proposed project. (See section II.A.)

*c. Need for the Project.* If the project is to be conducted in a specific location(s), the applicant should discuss the particular needs of the project site(s) to be addressed by the project and why those needs are not being met through the use of existing materials, programs, procedures, services, or other resources.

If the project is not site-specific, the applicant should discuss the problems that the proposed project would address, and why existing materials, programs, procedures, services, or other resources cannot adequately resolve those problems. The discussion should include specific references to the relevant literature and to the experience in the field.

*d. Tasks, Methods and Evaluation.* (1) Tasks and Methods. The applicant should delineate the tasks to be performed in achieving the project objectives and the methods to be used for accomplishing each task. For example:

(a) For research and evaluation projects, the applicant should include the data sources, data collection strategies, variables to be examined, and analytic procedures to be used for

conducting the research or evaluation and ensuring the validity and general applicability of the results. For projects involving human subjects, the discussion of methods should address the procedures for obtaining respondents' informed consent, ensuring the respondents' privacy and freedom from risk or harm, and the protection of others who are not the subjects of research but would be affected by the research. If the potential exists for risk or harm to the human subjects, a discussion should be included that explains the value of the proposed research and the methods to be used to minimize or eliminate such risk.

(b) For education and training projects, the applicant should include the adult education techniques to be used in designing and presenting the program, including the teaching/learning objectives of the educational design, the teaching methods to be used, and the opportunities for structured interaction among the participants; how faculty would be recruited, selected, and trained; the proposed number and length of the conferences, courses, seminars, or workshops to be conducted and the estimated number of persons who would attend them; the materials to be provided and how they would be developed; and the cost to participants.

(c) For demonstration projects, the applicant should include the demonstration sites and the reasons they were selected, or if the sites have not been chosen, how they would be identified and their cooperation obtained; and how the program or procedures would be implemented and monitored.

(d) For technical assistance projects, the applicant should explain the types of assistance that would be provided; the particular issues and problems for which assistance would be provided; how requests would be obtained and the type of assistance determined; how suitable providers would be selected and briefed; how reports would be reviewed; and the cost to recipients.

(2) Evaluation. Every project design must include an evaluation plan to determine whether the project met its objectives. The evaluation should be designed to provide an objective and independent assessment of the effectiveness or usefulness of the training or services provided; the impact of the procedures, technology, or services tested; or the validity and applicability of the research conducted. In addition, where appropriate, the evaluation process should be designed to provide on-going or periodic feedback on the effectiveness or utility of the project in order to promote its continuing improvement. The plan should present the qualifications of the evaluator(s); describe the criteria that would be used to evaluate the project's effectiveness in meeting its objectives; explain how the evaluation would be conducted, including the specific data collection and analysis techniques to be used; discuss why this approach would be appropriate; and present a schedule for completion of the evaluation within the proposed project period.

The evaluation plan should be appropriate to the type of project proposed.

For example:

(a) *Research.* An evaluation approach suited to many research projects is a review by an advisory panel of the research methodology, data collection instruments, preliminary analyses, and products as they are drafted. The panel should be comprised of independent researchers and practitioners representing the perspectives affected by the proposed project.

(b) *Education and Training.* The most valuable approaches to evaluating educational or training programs reinforce the participants' learning experience while providing useful feedback on the impact of the program and possible areas for improvement. One appropriate evaluation approach is to assess the acquisition of new knowledge, skills, attitudes or understanding through participant feedback on the seminar or training event. Such feedback might include a self-assessment on what was learned along with the participant's response to the quality and effectiveness of faculty presentations, the format of sessions, the value or usefulness of the material presented, and other relevant factors. Another appropriate approach would be to use an independent observer who might request both verbal and written responses from participants in the program. When an education project involves the development of curricular materials, an advisory panel of relevant experts can be coupled with a test of the curriculum to obtain the reactions of participants and faculty as indicated above.

(c) *Demonstration.* The evaluation plan for a demonstration project should encompass an assessment of program effectiveness (e.g., how well did it work?); user satisfaction, if appropriate; the cost-effectiveness of the program; a process analysis of the program (e.g., was the program implemented as designed, and/or did it provide the services intended to the targeted population?); the impact of the program (e.g., what effect did the program have on the court, and/or what benefits resulted from the program?); and the replicability of the program or components of the program.

(d) *Technical Assistance.* For technical assistance projects, applicants should explain how the quality, timeliness, and impact of the assistance provided would be determined, and develop a mechanism for feedback from both the users and providers of the technical assistance.

Evaluation plans involving human subjects should include a discussion of the procedures for obtaining respondents' informed consent, ensuring the respondents' privacy and freedom from risk or harm, and the protection of others who are not the subjects of evaluation but would be affected by it. Other than the provision of confidentiality to respondents, human subject protection issues ordinarily are not applicable to participants evaluating an education program.

e. *Project Management.* The applicant should present a detailed management plan, including the starting and completion date for each task; the time commitments to the project of key staff and their responsibilities regarding each project task; and the procedures that would ensure that all tasks are performed on time, within budget, and at the highest level of quality. In preparing the project time line, Gantt Chart, or schedule, applicants should make certain that all project activities, including publication or reproduction of project products and their initial dissemination, would occur within the proposed project period. The management plan must also provide for the submission of Quarterly Progress and Financial Reports within 30 days after the close of each calendar quarter (i.e., no later than January 30, April 30, July 30, and October 30).

Applicants should be aware that the Institute is unlikely to approve more than one limited extension of the grant period. Therefore, the management plan should be as realistic as possible and fully reflect the time commitments of the proposed project staff and consultants.

f. *Products.* The program narrative in the application should contain a description of the products to be developed (e.g., training curricula and materials, videotapes, articles, manuals, or handbooks), including when they would be submitted to the Institute. The budget should include the cost of producing and disseminating the product to each in-State SJI library, State chief justice, State court

administrator, and other judges or court personnel.

(1) Dissemination Plan. The application must explain how and to whom the products would be disseminated; describe how they would benefit the State courts, including how they could be used by judges and court personnel; identify development, production, and dissemination costs covered by the project budget; and present the basis on which products and services developed or provided under the grant would be offered to the courts community and the public at large (i.e., whether products would be distributed at no cost to recipients, or if costs are involved, the reason for charging recipients and the estimated price of the product). (See section IX.A.10.b.) Ordinarily, applicants should schedule all product preparation and distribution activities within the project period.

A copy of each product must be sent to the library established in each State to collect the materials developed with Institute support. (A list of these libraries is contained in Appendix D.) To facilitate their use, all videotaped products should be distributed in VHS format.

Seventeen (17) copies of all project products must be submitted to the Institute. A master copy of each videotape, in addition to 17 copies of each videotape product, must also be provided to the Institute.

(2) Types of Products and Press Releases. The type of product to be prepared depends on the nature of the project. For example, in most instances, the products of a research, evaluation, or demonstration project should include an article summarizing the project findings that is publishable in a journal serving the courts community nationally, an executive summary that would be disseminated to the project's primary audience, or both. Applicants proposing to conduct empirical research or evaluation projects with national import should describe how they would make their data available for secondary analysis after the grant period. (See section IX.A.13.a.)

The curricula and other products developed by education and training projects should be designed for use outside the classroom so that they may be used again by original participants and others in the course of their duties.

In addition, recipients of project grants must prepare a press release describing the project and announcing the results and distribute the release to a list of national and State judicial branch organizations. SJI will provide press release guidelines and a list of recipients to grantees at least 30 days before the end of the grant period.

(3) Institute Review. Applicants must submit a final draft of all written grant products to the Institute for review and approval at least 30 days before the products are submitted for publication or reproduction. For products in a videotape or CD-ROM format, applicants must provide for incremental Institute review of the product at the treatment, script, rough-cut, and final stages of development, or their equivalents. No grant funds may be obligated for publication or reproduction of a final grant product without the written approval of the Institute. See section IX.A.10e.)

(4) Acknowledgment, Disclaimer, and Logo. Applicants must also include in all project products a prominent acknowledgment that support was received from the Institute and a disclaimer paragraph based on the example provided in section IX.A.10. of the Guideline. The ''SJI'' logo must appear on the front cover of a written product, or in the opening frames of a video, unless the Institute approves another placement.

*g. Applicant Status.* An applicant that is not a State or local court and has not received a grant from the Institute within the past two years should state whether it is either a national non-profit organization controlled by, operating in conjunction with, and serving the judicial branches of State governments; or a national non-profit organization for the education and training of State court judges and support personnel. See section IV. If the applicant is a nonjudicial unit of Federal, State, or local government, it must explain whether the proposed services could be adequately provided by non-governmental entities.

*h. Staff Capability.* The applicant should include a summary of the training and experience of the key staff members and consultants that qualify them for conducting and managing the proposed project. Resumes of identified staff should be attached to the application. If one or more key staff members and consultants are not known at the time of the application, a description of the criteria that would be used to select persons for these positions should be included. The applicant also should identify the person who would be responsible for the financial management and financial reporting for the proposed project.

*i. Organizational Capacity.* Applicants that have not received a grant from the Institute within the past two years should include a statement describing their capacity to administer grant funds, including the financial systems used to monitor project expenditures (and income, if any), and a summary of their past experience in administering grants, as well as any resources or capabilities that they have that would particularly assist in the successful completion of the project.

Unless requested otherwise, an applicant that has received a grant from the Institute within the past two years should describe only the changes in its organizational capacity, tax status, or financial capability that may affect its capacity to administer a grant.

If the applicant is a non-profit organization (other than a university), it must also provide documentation of its 501(c) tax-exempt status as determined by the Internal Revenue Service and a copy of a current certified audit report. For purposes of this requirement, current means no earlier than two years prior to the current calendar year.

If a current audit report is not available, the Institute will require the organization to complete a financial capability questionnaire which must be signed by a Certified Public Accountant. Other applicants may be required to provide a current audit report, a financial capability questionnaire, or both, if specifically requested to do so by the Institute.

*j. Statement of Lobbying Activities.* Non-governmental applicants must submit the Institute's Disclosure of Lobbying Activities Form, which documents whether they, or another entity that is a part of the same organization as the applicant, have advocated a position before Congress on any issue, and identifies the specific subjects of their lobbying efforts.

*k. Letters of Cooperation or Support.* If the cooperation of courts, organizations, agencies, or individuals other than the applicant is required to conduct the project, the applicant should attach written assurances of cooperation and availability to the application, or send them under separate cover. To ensure sufficient time to bring them to the Board's attention, letters of support sent under separate cover must be received no more than 30 days after the deadline for mailing the application.

4. Budget Narrative

The budget narrative should provide the basis for the computation of all project-related costs. When the proposed project would be partially supported by grants from other funding sources, applicants should make clear what costs would be covered by those other grants. Additional background or schedules may be attached if they are

essential to obtaining a clear understanding of the proposed budget. Numerous and lengthy appendices are strongly discouraged.

The budget narrative should cover the costs of all components of the project and clearly identify costs attributable to the project evaluation. Under OMB grant guidelines incorporated by reference in this Guideline, grant funds may not be used to purchase alcoholic beverages.

*a. Justification of Personnel Compensation.* The applicant should set forth the percentages of time to be devoted by the individuals who would staff the proposed project, the annual salary of each of those persons, and the number of work days per year used for calculating the percentages of time or daily rates of those individuals. The applicant should explain any deviations from current rates or established written organizational policies. If grant funds are requested to pay the salary and related costs for a current employee of a court or other unit of government, the applicant should explain why this would not constitute a supplantation of State or local funds in violation of 42 U.S.C. 10706(d)(1). An acceptable explanation may be that the position to be filled is a new one established in conjunction with the project or that the grant funds would support only the portion of the employee's time that would be dedicated to new or additional duties related to the project.

*b. Fringe Benefit Computation.* The applicant should provide a description of the fringe benefits provided to employees. If percentages are used, the authority for such use should be presented, as well as a description of the elements included in the determination of the percentage rate.

*c. Consultant/Contractual Services and Honoraria.* The applicant should describe the tasks each consultant would perform, the estimated total amount to be paid to each consultant, the basis for compensation rates (e.g., the number of days multiplied by the daily consultant rates), and the method for selection. Rates for consultant services must be set in accordance with section X.I.2.c. Honorarium payments must be justified in the same manner as other consultant payments. Prior written Institute approval is required for any consultant rate in excess of $300 per day; Institute funds may not be used to pay a consultant more than $900 per day.

*d. Travel.* Transportation costs and per diem rates must comply with the policies of the applicant organization. If the applicant does not have an established travel policy, then travel rates must be consistent with those established by the Institute or the Federal Government. (A copy of the Institute's travel policy is available upon request.) The budget narrative should include an explanation of the rate used, including the components of the per diem rate and the basis for the estimated transportation expenses. The purpose of the travel should also be included in the narrative.

*e. Equipment.* Grant funds may be used to purchase only the equipment necessary to demonstrate a new technological application in a court or that is otherwise essential to accomplishing the objectives of the project. Equipment purchases to support basic court operations ordinarily will not be approved. The applicant should describe the equipment to be purchased or leased and explain why the acquisition of that equipment is essential to accomplish the project's goals and objectives. The narrative should clearly identify which equipment is to be leased and which is to be purchased. The method of procurement should also be described. Purchases for automatic data processing equipment must comply with section X.I.2.b.

*f. Supplies.* The applicant should provide a general description of the supplies necessary to accomplish the goals and objectives of the grant. In addition, the applicant should provide the basis for the amount requested for this expenditure category.

*g. Construction.* Construction expenses are prohibited except for the limited purposes set forth in section IX.A.15. Any allowable construction or renovation expense should be described in detail in the budget narrative.

*h. Telephone.* Applicants should include anticipated telephone charges, distinguishing between monthly charges and long distance charges in the budget narrative. Also, applicants should provide the basis used to calculate the monthly and long distance estimates.

*i. Postage.* Anticipated postage costs for project-related mailings, including distribution of the final product(s), should be described in the budget narrative. The cost of special mailings, such as for a survey or for announcing a workshop, should be distinguished from routine operational mailing costs. The bases for all postage estimates should be included in the budget narrative.

*j. Printing/Photocopying.* Anticipated costs for printing or photocopying project documents, reports, and publications should be included in the budget narrative, along with the bases used to calculate these estimates.

*k. Indirect Costs.* Applicants should describe the indirect cost rates applicable to the grant in detail. If costs often included within an indirect cost rate are charged directly (e.g., a percentage of the time of senior managers to supervise product activities), the applicant should specify that these costs are not included within its approved indirect cost rate. These rates must be established in accordance with section X.I.4. If the applicant has an indirect cost rate or allocation plan approved by any Federal granting agency, a copy of the approved rate agreement should be attached to the application.

*l. Match.* The applicant should describe the source of any matching contribution and the nature of the match provided. Any additional contributions to the project should be described in this section of the budget narrative as well. If in-kind match is to be provided, the applicant should describe how the amount and value of the time, services, or materials actually contributed would be documented for audit purposes. Applicants should be aware that the time spent by participants in education courses does not qualify as in-kind match.

Applicants that do not contemplate making matching contributions continuously throughout the course of the project or on a task-by-task basis must provide a schedule within 30 days after the beginning of the project period indicating at what points during the project period the matching contributions would be made. (See sections III.N., VIII.B., IX.A.7., and X.E.1.)

5. Submission Requirements

a. Every applicant must submit an original and four copies of the application package consisting of FORM A; FORM B, if the application is from a State or local court, or a Disclosure of Lobbying Form, if the applicant is not a unit of State or local government; the Budget Forms (either FORM C or C–1); the Application Abstract; Program Narrative; Budget Narrative; and any necessary appendices.

All applications invited by the Institute's Board of Directors must be sent by first class or overnight mail or by courier no later than May 10, 2000. A postmark or courier receipt will constitute evidence of the submission date. Please mark APPLICATION on the application package envelope and send it to: State Justice Institute, 1650 King Street, Suite 600, Alexandria, VA 22314.

Receipt of each application will be acknowledged in writing. Extensions of the deadline for submission of

applications will not be granted. See 3.k. above in this section for deadlines for letters of support.

b. Applicants submitting more than one application may include material that would be identical in each application in a cover letter. This material will be incorporated by reference into each application and counted against the 25-page limit for the program narrative. A copy of the cover letter should be attached to each copy of each application.

*B. Continuation Grant Applications*

1. Purpose and Scope

Continuation grants are intended to support projects with a limited duration that involve the same type of activities as the previous project. They are intended to enhance the specific program or service produced or established during the prior grant period. They may be used, for example, when a project is divided into two or more sequential phases, for secondary analysis of data obtained in an Institute-supported research project, or for more extensive testing of an innovative technology, procedure, or program developed with SJI grant support. Continuation grants should be distinguished from on-going support grants, which are awarded to support critically needed long-term national scope projects. See C. below in this section.

The award of an initial grant to support a project does not constitute a commitment by the Institute to continue funding. For a project to be considered for continuation funding, the grantee must have completed all project tasks and met all grant requirements and conditions in a timely manner, absent extenuating circumstances or prior Institute approval of changes to the project design. Continuation grants are not intended to provide support for a project for which the grantee has underestimated the amount of time or funds needed to accomplish the project tasks.

2. Letters of Intent

In lieu of a concept paper, a grantee seeking a continuation grant must inform the Institute, by letter, of its intent to submit an application for such funding as soon as the need for continued funding becomes apparent but no less than 120 days before the end of the current grant period.

a. A letter of intent must be no more than 3 single-spaced pages on 8½ by 11 inch paper and contain a concise but thorough explanation of the need for continuation; an estimate of the funds to be requested; and a brief description of anticipated changes in the scope, focus, or audience of the project.

b. Within 30 days after receiving a letter of intent, Institute staff will review the proposed activities for the next project period and inform the grantee of specific issues to be addressed in the continuation application and the date by which the application must be submitted.

3. Application Format

An application for a continuation grant must include an application form, budget forms (with appropriate documentation), a project abstract conforming to the format set forth in A.2. of this section, a program narrative, a budget narrative, a Certificate of State Approval—FORM B (Appendix I) if the applicant is a State or local court, a disclosure of lobbying form (from applicants other than units of State or local government), and any necessary appendices.

The program narrative should conform to the length and format requirements set forth in A.3. of this section. However, rather than the topics listed there, the program narrative of a continuation application should include:

*a. Project Objectives.* The applicant should clearly and concisely state what the continuation project is intended to accomplish.

*b. Need for Continuation.* The applicant should explain why continuation of the project is necessary to achieve the goals of the project, and how the continuation would benefit the participating courts or the courts community generally, by explaining, for example, how the original goals and objectives of the project would be unfulfilled if it were not continued; or how the value of the project would be enhanced by its continuation.

*c. Report of Current Project Activities.* The applicant should discuss the status of all activities conducted during the previous project period. Applicants should identify any activities that were not completed, and explain why.

*d. Evaluation Findings.* The applicant should present the key findings, impact, or recommendations resulting from the evaluation of the project, if available, and how they would be addressed during the proposed continuation. If the findings are not yet available, the applicant should provide the date by which they would be submitted to the Institute. Ordinarily, the Board will not consider an application for continuation funding until the Institute has received the evaluator's report.

*e. Tasks, Methods, Staff and Grantee Capability.* The applicant should fully describe any changes in the tasks to be performed, the methods to be used, the products of the project, and how and to whom those products would be disseminated, as well as any changes in the assigned staff or the grantee's organizational capacity. Applicants should include, in addition, the criteria and methods by which the proposed continuation project would be evaluated.

*f. Task Schedule.* The applicant should present a detailed task schedule and timeline for the next project period.

*g. Other Sources of Support.* The applicant should indicate why other sources of support would be inadequate, inappropriate, or unavailable.

4. Budget and Budget Narrative

The applicant should provide a complete budget and budget narrative conforming to the requirements set forth in A.4. in this section. Changes in the funding level requested should be discussed in terms of corresponding increases or decreases in the scope of activities or services to be rendered. In addition, the applicant should estimate the amount of grant funds that would remain unobligated at the end of the current grant period.

5. References to Previously Submitted Material

A continuation application should not repeat information contained in a previously approved application or other previously submitted materials, but should provide specific references to such materials where appropriate.

6. Submission Requirements

The submission requirements set forth in A.5. in this section, other than the mailing deadline, apply to continuation applications.

*C. On-Going Support Grants*

1. Purpose and Scope

On-going support grants are intended to support projects that are national in scope and provide the State courts with services, programs or products for which there is a continuing critical need. An on-going support grant may also be used to fund longitudinal research that directly benefits the State courts. On-going support grants are subject to the limits on size and duration set forth in V.C.2. and V.D.2. The Board will consider awarding an on-going support grant for a period of up to 36 months. The total amount of the grant will be fixed at the time of the initial award. Funds ordinarily will be

made available in annual increments as specified in section V.C.2.

The award of an initial grant to support a project does not constitute a commitment by the Institute to provide on-going support at the end of the original project period. A project is eligible for consideration for an on-going support grant if:

a. The project is supported by and has been evaluated under a grant from the Institute;

b. The project is national in scope and provides a significant benefit to the State courts;

c. There is a continuing critical need for the services, programs or products provided by the project, indicated by the level of use and support by members of the court community;

d. The project is accomplishing its objectives in an effective and efficient manner; and

e. It is likely that the service or program provided by the project would be curtailed or significantly reduced without Institute support.

Each on-going support application must include an evaluation component assessing its effectiveness and operation throughout the grant period. The evaluation should be independent but may be designed collaboratively by the evaluator and the grantee. The design should call for regular feedback from the evaluator to the grantee throughout the project period concerning recommendations for mid-course corrections or improvement of the project, as well as periodic reports to the Institute at relevant points in the project.

An interim evaluation report must be submitted 18 months into the 3-year grant period. The decision to release Institute funds to support the third year of the project will be based on the interim evaluation findings and the applicant's response to any deficiencies noted in the report, as well as the availability of appropriations and the project's consistency with the Institute's priorities.

A final evaluation assessing the effectiveness, operation of, and continuing need for the project must be submitted 90 days before the end of the 3-year project period. In addition, a detailed annual task schedule must be submitted not later than 45 days before the end of the first and second years of the grant period, along with an explanation of any necessary revisions in the projected costs for the remainder of the project period.

2. Letters of Intent

In lieu of a concept paper, an applicant seeking an on-going support grant must inform the Institute, by letter, of its intent to submit an application for such funding as soon as the need for continuing funding becomes apparent but no less than 120 days before the end of the current grant period. The letter of intent should be in the same format as that prescribed for continuation grants in B.2. of this section.

3. Format

An application for an on-going support grant must include an application form; budget forms (with appropriate documentation); a Certificate of State Approval—FORM B (Appendix I) if the applicant is a State or local court; a Disclosure of Lobbying Activities form (from applicants other than units of State or local government); a project abstract conforming to the format set forth in A.2. of this section; a program narrative; a budget narrative; and any necessary appendices.

The program narrative should conform to the length and format requirements set forth in A.3. of this section; however, rather than the topics listed there, the program narrative of applications for on-going support grants should address:

*a. Description of Need for and Benefits of the Project.* The applicant should provide a detailed discussion of the benefits provided by the project to the State courts around the country, including the degree to which State courts, State court judges, or State court managers and personnel are using the services or programs provided by the project.

*b. Demonstration of Court Support.* The applicant should demonstrate support for the continuation of the project from the courts community.

*c. Report on Current Project Activities.* The applicant should discuss the extent to which the project has met its goals and objectives, identify any activities that have not been completed, and explain why they have not been completed.

*d. Evaluation Findings.* The applicant should attach a copy of the final evaluation report regarding the effectiveness, impact, and operation of the project, specify the key findings or recommendations resulting from the evaluation, and explain how they would be addressed during the next three years. Ordinarily, the Board will not consider an application for on-going support until the Institute has received the evaluator's report.

*e. Objectives, Tasks, Methods, Staff and Grantee Capability.* The applicant should describe fully any changes in the objectives; tasks to be performed; the methods to be used; the products of the project; how and to whom those products would be disseminated; the assigned staff; and the grantee's organizational capacity. The grantee also should describe the steps it would take to obtain support from other sources for the continued operation of the project.

*f. Task Schedule.* The applicant should present a general schedule for the full proposed project period and a detailed task schedule for the first year of the proposed new project period.

*g. Other Sources of Support.* The applicant should describe what efforts it has taken to secure support for the project from other sources.

4. Budget and Budget Narrative

The applicant should provide a complete three-year budget and budget narrative conforming to the requirements set forth in A.4. of this section, and estimate the amount of grant funds that would remain unobligated at the end of the current grant period. Changes in the funding level requested should be discussed in terms of corresponding increases or decreases in the scope of activities or services to be rendered. A complete budget narrative should be provided for the full project as well as for each year, or portion of a year, for which grant support is requested. The budget should provide for realistic cost-of-living and staff salary increases over the course of the requested project period. Applicants should be aware that the Institute is unlikely to approve a supplemental budget increase for an on-going support grant in the absence of well-documented, unanticipated factors that would clearly justify the requested increase.

5. References to Previously Submitted Material

An application for an on-going support grant should not repeat information contained in a previously approved application or other previously submitted materials, but should provide specific references to such materials where appropriate.

6. Submission Requirements

The submission requirements set forth in A.5. of this section, other than the mailing deadline, apply to applications for on-going support grants.

*D. Technical Assistance Grants*

1. Purpose and Scope

Technical assistance grants are awarded to State and local courts to obtain the assistance of outside experts in diagnosing, developing, and

implementing a response to a particular problem in a jurisdiction.

2. Application Procedures

In lieu of formal applications, applicants for Technical Assistance grants may submit, at any time, an original and three copies of a detailed letter describing the proposed project. Letters from an individual trial or appellate court must be signed by the presiding judge or manager of that court. Letters from the State court system must be signed by the Chief Justice or State Court Administrator.

3. Application Format

Although there is no prescribed form for the letter nor a minimum or maximum page limit, letters of application should include the following information:

*a. Need for Funding.* What is the critical need facing the court? How would the proposed technical assistance help the court meet this critical need? Why cannot State or local resources fully support the costs of the required consultant services?

*b. Project Description.* What tasks would the consultant be expected to perform, and how would they be accomplished? Which organization or individual would be hired to provide the assistance, and how was this consultant selected? If a consultant has not yet been identified, what procedures and criteria would be used to select the consultant? (Applicants are expected to follow their jurisdictions' normal procedures for procuring consultant services.) What is the time frame for completion of the technical assistance? How would the court oversee the project and provide guidance to the consultant, and who at the court would be responsible for coordinating all project tasks and submitting quarterly progress and financial status reports?

If the consultant has been identified, the applicant should provide a letter from that individual or organization documenting interest in and availability for the project, as well as the consultant's ability to complete the assignment within the proposed time frame and for the proposed cost. The consultant must agree to submit a detailed written report to the court and the Institute upon completion of the technical assistance.

*c. Likelihood of Implementation.* What steps have been or would be taken to facilitate implementation of the consultant's recommendations upon completion of the technical assistance? For example, if the support or cooperation of specific court officials or committees, other agencies, funding bodies, organizations, or a court other than the applicant would be needed to adopt the changes recommended by the consultant and approved by the court, how would they be involved in the review of the recommendations and development of the implementation plan?

*d. Support for the Project from the State Supreme Court or its Designated Agency or Council.* Written concurrence on the need for the technical assistance must be submitted. This concurrence may be a copy of SJI Form B (see Appendix I) signed by the Chief Justice of the State Supreme Court or the Chief Justice's designee, or a letter from the State Chief Justice or designee. The concurrence may be submitted with the applicant's letter or under separate cover prior to consideration of the application. The concurrence also must specify whether the State Supreme Court would receive, administer, and account for the grant funds, if awarded, or would designate the local court or a specified agency or council to receive the funds directly.

4. Budget and Matching State Contribution

A completed Form E, Preliminary Budget (see Appendix H) and budget narrative must be included with the letter requesting technical assistance. The estimated cost of the technical assistance services should be broken down into the categories listed on the budget form rather than aggregated under the Consultant/Contractual category.

The budget narrative should provide the basis for all project-related costs, including the basis for determining the estimated consultant costs, if compensation of the consultant is required (e.g., the number of days per task times the requested daily consultant rate). Applicants should be aware that consultant rates above $300 per day must be approved in advance by the Institute, and that no consultant will be paid more than $900 per day. In addition, the budget should provide for submission of two copies of the consultant's final report to the Institute.

Recipients of technical assistance grants do not have to submit an audit but must maintain appropriate documentation to support expenditures. (See section IX.A.3.)

5. Submission Requirements

Letters of application may be submitted at any time; however, all of the letters received during a calendar quarter will be considered at one time. Applicants submitting letters between June 12 and September 30, 1999 will be notified of the Board's decision by December 10, 1999; those submitting letters between October 1, 1999 and January 14, 2000 will be notified by March 31, 2000; notification of the Board's decisions concerning letters mailed between January 15 and March 11, 2000, will be made by May 26, 2000; and notice of decisions regarding letters submitted between March 11 and June 10, 2000 will be made by August 25, 2000. Subject to the availability of sufficient appropriations for fiscal year 2000, applicants submitting letters between June 11 and September 29, 2000, will be notified by December 15, 2000.

If the support or cooperation of agencies, funding bodies, organizations, or courts other than the applicant would be needed in order for the consultant to perform the required tasks, written assurances of such support or cooperation should accompany the application letter. Support letters also may be submitted under separate cover; however, to ensure that there is sufficient time to bring them to the attention of the Board's Technical Assistance Committee, letters sent under separate cover must be received not less than three weeks prior to the Board meeting at which the technical assistance requests will be considered (i.e., by October 21, 1999, and February 10, April 13, and July 7, 2000).

*E. Curriculum Adaptation Grants*

1. Purpose and Scope

Curriculum Adaptation grants are awarded to State and local courts to support replication or modification of a model training program originally developed with Institute funds.

2. Application Procedures

In lieu of concept papers and formal applications, applicants should submit an original and three photocopies of a detailed letter.

3. Application Format

Although there is no prescribed format for the letter, or a minimum or maximum page limit, letters of application should include the following information:

*a. Project Description.* What is the title of the model curriculum to be adapted and who developed it? What are the project's goals? Why is this education program needed at the present time? What program components would be implemented, and what types of modifications, if any, are anticipated in length, format, learning objectives, teaching methods, or content? Who would be responsible

for adapting the model curriculum? Who would the participants be, how many would there be, how would they be recruited, and from where would they come (e.g., from across the State, from a single local jurisdiction, from a multi-State region)?

*b. Need for Funding.* Why are sufficient State or local resources unavailable to fully support the modification and presentation of the model curriculum? What is the potential for replicating or integrating the program in the future using State or local funds, once it has been successfully adapted and tested?

*c. Likelihood of Implementation.* What is the proposed timeline for modifying and presenting the program? Who would serve as faculty, and how were they selected? What measures would be taken to facilitate subsequent presentations of the adapted program? (Ordinarily, an independent evaluation of a curriculum adaptation project is not required; however, the results of any evaluation should be included in the final report.)

*d. Expressions of Interest By Judges and/or Court Personnel.* Does the proposed program have the support of the court system leadership, and of judges, court managers, and judicial education personnel who are expected to attend? (This may be demonstrated by attaching letters of support.)

*e. Chief Justice's Concurrence.* Local courts should attach a concurrence form signed by the Chief Justice of the State or his or her designee. (See Form B, Appendix I.)

4. Budget and Matching State Contribution

Applicants should attach a copy of budget Form E (see Appendix H) and a budget narrative (see A.4. in this section) that describes the basis for the computation of all project-related costs and the source of the match offered. As with other awards to State or local courts, cash or in-kind match must be provided in an amount equal to at least 50% of the grant amount requested.

5. Submission Requirements

Letters of application may be submitted at any time. However, applicants should allow at least 90 days between the date of submission and the date of the proposed program to allow sufficient time for needed planning.

*F. Scholarships*

1. Purpose and Scope

The purposes of the Institute scholarship program are to enhance the skills, knowledge, and abilities of judges and court managers; enable State court judges and court managers to attend out-of-State educational programs sponsored by national and State providers that they could not otherwise attend because of limited State, local and personal budgets; and provide States, judicial educators, and the Institute with evaluative information on a range of judicial and court-related education programs.

Scholarships will be granted to individuals only for the purpose of attending an out-of-State educational program within the United States. An applicant may apply for a scholarship for only one educational program during any one application cycle.

Scholarship funds may be used only to cover the costs of tuition and transportation expenses. Transportation expenses may include round-trip coach airfare or train fare. Recipients who drive to a program site may receive $.31/mile up to the amount of the advanced-purchase round-trip airfare between their homes and the program sites. Funds to pay tuition and transportation expenses in excess of $1,500 and other costs of attending the program—such as lodging, meals, materials, transportation to and from airports, and local transportation (including rental cars)—at the program site must be obtained from other sources or be borne by the scholarship recipient. Scholarship applicants are encouraged to check other sources of financial assistance and to combine aid from various sources whenever possible.

A scholarship is not transferable to another individual. It may be used only for the course specified in the application unless attendance at a different course that meets the eligibility requirements is approved in writing by the Institute. Decisions on such requests will be made within 30 days after the receipt of the request letter.

2. Eligibility Requirements

*a. Recipients.* Scholarships can be awarded only to full-time judges of State or local trial and appellate courts; full-time professional, State or local court personnel with management responsibilities; and supervisory and management probation personnel in judicial branch probation offices. Senior judges, part-time judges, quasi-judicial hearing officers including referees and commissioners, State administrative law judges, staff attorneys, law clerks, line staff, law enforcement officers, and other executive branch personnel are not eligible to receive a scholarship.

*b. Courses.* A Scholarship can be awarded only for a course presented in a U.S. jurisdiction other than the one in which the applicant resides that is designed to enhance the skills of new or experienced judges and court managers; address any of the topics listed in the Institute's Special Interest categories; or is offered by a recognized graduate program for judges or court managers. The annual or mid-year meeting of a State or national organization of which the applicant is a member does not qualify as an out-of-State educational program for scholarship purposes, even though it may include workshops or other training sessions.

Applicants are encouraged not to wait for the decision on a scholarship to register for an educational program they wish to attend.

3. Forms

*a. Judicial Education Scholarship Application—FORM S–1 (Appendix G).* The application form requests basic information about the applicant and the educational program the applicant would like to attend. It also addresses the applicant's commitment to share the skills and knowledge gained with local court colleagues and to submit an evaluation of the program the applicant attends.

*b. Scholarship Application Concurrence—FORM S–2 (Appendix G).* Judges and court managers applying for a scholarship must submit the written concurrence of the Chief Justice of the State's Supreme Court (or the Chief Justice's designee) on the Institute's Judicial Education Scholarship Concurrence form (see Appendix V). The signature of the presiding judge of the applicant's court cannot be substituted for that of the Chief Justice or the Chief Justice's designee. Court managers, other than elected clerks of court, also must submit a letter of support from their immediate supervisors.

4. Submission Requirements

Scholarship applications must be submitted during the periods specified below:

October 1–December 1, 1999, for programs beginning between January 1 and March 31, 2000;

January 7–March 7, 2000, for programs beginning between April 1 and June 30, 2000;

April 3–June 1, 2000, for programs beginning between July 1 and September 30, 2000;

July 5–September 1, 2000, for programs beginning between October 1 and December 31, 2000; and

October 2–December 1, 2000, for programs beginning between January 1 and March 31, 2001.

No exceptions or extensions will be granted. Applications sent prior to the beginning of an application period will be treated as having been sent one week *after the beginning of that application period.* All the required items must be received for an application to be considered. If the Concurrence form or letter of support is sent separately from the application, the postmark date of the last item to be sent will be used in applying the above criteria.

All applications should be sent by mail or courier (not fax or e-mail) to: Scholarship Program Coordinator, State Justice Institute, 1650 King Street, Suite 600, Alexandria, VA 22314.

## VIII. Application Review Procedures

### *A. Preliminary Inquiries*

The Institute staff will answer inquiries concerning application procedures. The staff contact will be named in the Institute's letter acknowledging receipt of the application.

### *B. Selection Criteria*

1. Project, Continuation, and On-going Support Grant Applications

a. All applications will be rated on the basis of the criteria set forth below. The Institute will accord the greatest weight to the following criteria:

(1) The soundness of the methodology;

(2) The demonstration of need for the project;

(3) The appropriateness of the proposed evaluation design;

(4) The applicant's management plan and organizational capabilities;

(5) The qualifications of the project's staff;

(6) The products and benefits resulting from the project including the extent to which the project will have long-term benefits for State courts across the nation;

(7) The degree to which the findings, procedures, training, technology, or other results of the project can be transferred to other jurisdictions.

(8) The reasonableness of the proposed budget;

(9) The demonstration of cooperation and support of other agencies that may be affected by the project; and

(10) The proposed project's relationship to one of the ''Special Interest'' categories set forth in section II.B.

b. For continuation and on-going support grant applications, the key findings and recommendations of evaluations and the proposed responses to those findings and recommendations also will be considered.

c. In determining which applicants to fund, the Institute will also consider whether the applicant is a State court, a national court support or education organization, a non-court unit of government, or other type of entity eligible to receive grants under the Institute's enabling legislation (see 42 U.S.C. 10705(6) (as amended) and Section IV. above); the availability of financial assistance from other sources for the project; the amount and nature (cash or in-kind) of the applicant's match; the extent to which the proposed project would also benefit the Federal courts or help State courts enforce Federal constitutional and legislative requirements; and the level of appropriations available to the Institute in the current year and the amount expected to be available in succeeding fiscal years.

2. Technical Assistance Grant Applications

Technical Assistance grant applications will be rated on the basis of the following criteria:

a. Whether the assistance would address a critical need of the court;

b. The soundness of the technical assistance approach to the problem;

c. The qualifications of the consultant(s) to be hired, or the specific criteria that will be used to select the consultant(s);

d. Commitment on the part of the court to act on the consultant's recommendations; and

e. The reasonableness of the proposed budget.

The Institute also will consider factors such as the level and nature of the match that would be provided, diversity of subject matter, geographic diversity, the level of appropriations available to the Institute in the current year, and the amount expected to be available in succeeding fiscal years.

3. Curriculum Adaptation Grant Applications

Curriculum Adaptation grant applications will be rated on the basis of the following criteria:

a. The goals and objectives of the proposed project;

b. The need for outside funding to support the program;

c. The appropriateness of the approach in achieving the project's educational objectives;

d. The likelihood of effective implementation and integration into the State's or local jurisdiction's ongoing educational programming; and

e. Expressions of interest by the judges and/or court personnel who would be directly involved in or affected by the project.

The Institute will also consider factors such as the reasonableness of the amount requested, compliance with match requirements, diversity of subject matter, geographic diversity, the level of appropriations available in the current year, and the amount expected to be available in succeeding fiscal years.

4. Scholarships

Scholarships will be awarded on the basis of:

a. The date on which the application and concurrence (and support letter, if required) were received;

b. The unavailability of State or local funds to cover the costs of attending the program or scholarship funds from another source;

c. The absence of educational programs in the applicant's State addressing the topic(s) covered by the educational program for which the scholarship is being sought;

d. Geographic balance among the recipients;

e. The balance of scholarships among educational programs;

f. The balance of scholarships among the types of courts represented; and

g. The level of appropriations available to the Institute in the current year and the amount expected to be available in succeeding fiscal years.

The postmark or courier receipt will be used to determine the date on which the application form and other required items were sent

### *C. Review and Approval Process*

1. Project, Continuation, and On-going Support Grant Applications

Applications will be reviewed competitively by the Board of Directors. The Institute staff will prepare a narrative summary of each application and a rating sheet assigning points for each relevant selection criterion. When necessary, applications may also be reviewed by outside experts. Committees of the Board will review applications within assigned program categories and prepare recommendations to the full Board. The full Board of Directors will then decide which applications to approve for grants. The decision to award a grant is solely that of the Board of Directors.

Awards approved by the Board will be signed by the Chairman of the Board on behalf of the Institute.

2. Technical Assistance and Curriculum Adaptation Grant Applications

The Institute staff will prepare a narrative summary of each application and a rating sheet assigning points for each relevant selection criterion.

Applications will be reviewed competitively by a committee of the Board of Directors. The Board of Directors has delegated its authority to approve Technical Assistance and Curriculum Adaptation grants to the committee established for each program.

Approved awards will be signed by the Chairman of the Board on behalf of the Institute.

3. Scholarships

Scholarship applications are reviewed quarterly by a committee of the Institute's Board of Directors. The Board of Directors has delegated its authority to approve Scholarships to the committee established for the program.

Approved awards will be signed by the Chairman of the Board on behalf of the Institute.

*D. Return Policy*

Unless a specific request is made, unsuccessful applications will not be returned. Applicants are advised that Institute records are subject to the provisions of the Federal Freedom of Information Act, 5 U.S.C. 552.

*E. Notification of Board Decision*

1. The Institute will send written notice to applicants concerning all Board decisions to approve, defer, or deny their respective applications. For all except Scholarship applications, the Institute also will convey the key issues and questions that arose during the review process. A decision by the Board to deny an application may not be appealed, but it does not prohibit resubmission of a proposal based on that application in a subsequent funding cycle. With respect to awards other than Scholarships, the Institute will also notify the designated State contact listed in Appendix C when grants are approved by the Board to support projects that will be conducted by or involve courts in that State.

2. The Board anticipates acting upon Curriculum Adaptation grant applications within 45 days after receipt. Grant funds will be available only after Board approval, and negotiation of the final terms of the grant.

3. The Institute intends to notify each Scholarship applicant of the Board committee's decision within 30 days after the close of the relevant application period.

*F. Response to Notification of Approval*

With the exception of those approved for Scholarships, applicants have 30 days from the date of the letter notifying them that the Board has approved their application to respond to any revisions requested by the Board. If the requested revisions (or a reasonable schedule for submitting such revisions) have not been submitted to the Institute within 30 days after notification, the approval may be automatically rescinded and the application presented to the Board for reconsideration.

**IX. Compliance Requirements**

The State Justice Institute Act contains limitations and conditions on grants, contracts, and cooperative agreements awarded by the Institute. The Board of Directors has approved additional policies governing the use of Institute grant funds. These statutory and policy requirements are set forth below.

*A. Recipients of Project Grants*

1. Advocacy

No funds made available by the Institute may be used to support or conduct training programs for the purpose of advocating particular nonjudicial public policies or encouraging nonjudicial political activities. (42 U.S.C. 10706(b)).

2. Approval of Key Staff

If the qualifications of an employee or consultant assigned to a key project staff position are not described in the application or if there is a change of a person assigned to such a position, the recipient must submit a description of the qualifications of the newly assigned person to the Institute. Prior written approval of the qualifications of the new person assigned to a key staff position must be received from the Institute before the salary or consulting fee of that person and associated costs may be paid or reimbursed from grant funds.

3. Audit

Recipients of project grants must provide for an annual fiscal audit which includes an opinion on whether the financial statements of the grantee present fairly its financial position and financial operations are in accordance with generally accepted accounting principles. (See section X.K. of the Guideline for the requirements of such audits.) Recipients of scholarships or curriculum adaptation or technical assistance grants are not required to submit an audit, but must maintain appropriate documentation to support all expenditures.

4. Conflict of Interest

Personnel and other officials connected with Institute-funded programs must adhere to the following requirements:

a. No official or employee of a recipient court or organization shall participate personally through decision, approval, disapproval, recommendation, the rendering of advice, investigation, or otherwise in any proceeding, application, request for a ruling or other determination, contract, grant, cooperative agreement, claim, controversy, or other particular matter in which Institute funds are used, where, to his or her knowledge, he or she or his or her immediate family, partners, organization other than a public agency in which he or she is serving as officer, director, trustee, partner, or employee or any person or organization with whom he or she is negotiating or has any arrangement concerning prospective employment, or has a financial interest.

b. In the use of Institute project funds, an official or employee of a recipient court or organization shall avoid any action which might result in or create the appearance of:

(1) Using an official position for private gain; or

(2) Affecting adversely the confidence of the public in the integrity of the Institute program.

c. Requests for proposals or invitations for bids issued by a recipient of Institute funds or a subgrantee or subcontractor will provide notice to prospective bidders that the contractors who develop or draft specifications, requirements, statements of work, and/or requests for proposals for a proposed procurement will be excluded from bidding on or submitting a proposal to compete for the award of such procurement.

5. Inventions and Patents

If any patentable items, patent rights, processes, or inventions are produced in the course of Institute-sponsored work, such fact shall be promptly and fully reported to the Institute. Unless there is a prior agreement between the grantee and the Institute on disposition of such items, the Institute shall determine whether protection of the invention or discovery shall be sought. The Institute will also determine how the rights in the invention or discovery, including rights under any patent issued thereon, shall be allocated and administered in order to protect the public interest consistent with ''Government Patent Policy'' (President's Memorandum for Heads of Executive Departments and Agencies, February 18, 1983, and statement of Government Patent Policy).

6. Lobbying

a. Funds awarded to recipients by the Institute shall not be used, indirectly or

directly, to influence Executive orders or similar promulgations by Federal, State or local agencies, or to influence the passage or defeat of any legislation by Federal, State or local legislative bodies. 42 U.S.C. 10706(a).

b. It is the policy of the Board of Directors to award funds only to support applications submitted by organizations that would carry out the objectives of their applications in an unbiased manner. Consistent with this policy and the provisions of 42 U.S.C. 10706, the Institute will not knowingly award a grant to an applicant that has, directly or through an entity that is part of the same organization as the applicant, advocated a position before Congress on the specific subject matter of the application.

7. Matching Requirements

a. All awards to courts or other units of State or local government (not including publicly supported institutions of higher education) require a match from private or public sources of not less than 50% of the total amount of the Institute's award. For example, if the total cost of a project is anticipated to be $150,000, a State court or executive branch agency may request up to $100,000 from the Institute to implement the project. The remaining $50,000 (50% of the $100,000 requested from SJI) must be provided as a match. A cash match, non-cash match, or both may be provided, but the Institute will give preference to those applicants that provide a cash match to the Institute's award. (For a further definition of match, see section III.N.)

b. The requirement to provide match may be waived in exceptionally rare circumstances upon the request of the Chief Justice of the highest court in the State and approval by the Board of Directors. 42 U.S.C. 10705(d).

c. Other eligible recipients of Institute funds are not required to provide a match, but are encouraged to contribute to meeting the costs of the project. In instances where match is proposed, the grantee is responsible for ensuring that the total amount proposed is actually contributed. If a proposed contribution is not fully met, the Institute may reduce the award amount accordingly, in order to maintain the ratio originally provided for in the award agreement (see sections VIII.B. and X.E).

8. Nondiscrimination

No person may, on the basis of race, sex, national origin, disability, color, or creed be excluded from participation in, denied the benefits of, or otherwise subjected to discrimination under any program or activity supported by Institute funds. Recipients of Institute funds must immediately take any measures necessary to effectuate this provision.

9. Political Activities

No recipient may contribute or make available Institute funds, program personnel, or equipment to any political party or association, or the campaign of any candidate for public or party office. Recipients are also prohibited from using funds in advocating or opposing any ballot measure, initiative, or referendum. Officers and employees of recipients shall not intentionally identify the Institute or recipients with any partisan or nonpartisan political activity associated with a political party or association, or the campaign of any candidate for public or party office. 42 U.S.C. 10706(a).

10. Products

*a. Acknowledgment, Logo, and Disclaimer.* (1) Recipients of Institute funds must acknowledge prominently on all products developed with grant funds that support was received from the Institute. The ''SJI'' logo must appear on the front cover of a written product, or in the opening frames of a video product, unless another placement is approved in writing by the Institute. This includes final products printed or otherwise reproduced during the grant period, as well as reprintings or reproductions of those materials following the end of the grant period. A camera-ready logo sheet is available from the Institute upon request.

(2) Recipients also must display the following disclaimer on all grant products: ''This [document, film, videotape, etc.] was developed under [grant/cooperative agreement, number SJI–(insert number)] from the State Justice Institute. The points of view expressed are those of the [author(s), filmmaker(s), etc.] and do not necessarily represent the official position or policies of the State Justice Institute.''

*b. Charges for Grant-Related Products/Recovery of Costs.* (1) When Institute funds fully cover the cost of developing, producing, and disseminating a product, (e.g., a report, curriculum, videotape or software), the product should be distributed to the field without charge. When Institute funds only partially cover the development, production, or dissemination costs, the grantee may, with the Institute's prior written approval, recover its costs for developing, producing, and disseminating the material to those requesting it, to the extent that those costs were not covered by Institute funds or grantee matching contributions.

(2) Applicants should disclose their intent to sell grant-related products in both the concept paper and the application. Grantees must obtain the written prior approval of the Institute of their plans to recover project costs through the sale of grant products. Written requests to recover costs ordinarily should be received during the grant period and should specify the nature and extent of the costs to be recouped, the reason that such costs were not budgeted (if the rationale was not disclosed in the approved application), the number of copies to be sold, the intended audience for the products to be sold, and the proposed sale price. If the product is to be sold for more than $25, the written request also should include a detailed itemization of costs that will be recovered and a certification that the costs were not supported by either Institute grant funds or grantee matching contributions.

(3) In the event that the sale of grant products results in revenues that exceed the costs to develop, produce, and disseminate the product, the revenue must continue to be used for the authorized purposes of the Institute-funded project or other purposes consistent with the State Justice Institute Act that have been approved by the Institute. See sections III.R. and X.G. for requirements regarding project-related income realized during the project period.

*c. Copyrights.* Except as otherwise provided in the terms and conditions of an Institute award, a recipient is free to copyright any books, publications, or other copyrightable materials developed in the course of an Institute-supported project, but the Institute shall reserve a royalty-free, nonexclusive and irrevocable right to reproduce, publish, or otherwise use, and to authorize others to use, the materials for purposes consistent with the State Justice Institute Act.

*d. Distribution.* In addition to the distribution specified in the grant application, grantees shall send:

(1) Seventeen (17) copies of each final product developed with grant funds to the Institute, unless the product was developed under either a curriculum adaptation or a technical assistance grant, in which case submission of 2 copies is required.

(2) A mastercopy of each videotape produced with grant funds to the Institute.

(3) One copy of each final product developed with grant funds to the

library established in each State to collect materials prepared with Institute support. (A list of these libraries is contained in Appendix D. Labels for these libraries are available from the Institute upon request.) Recipients of curriculum adaptation and technical assistance grants are not required to submit final products to State libraries.

(4) A press release describing the project and announcing the results to a list of national and State judicial branch organizations provided by the Institute.

*e. Institute Approval.* No grant funds may be obligated for publication or reproduction of a final product developed with grant funds without the written approval of the Institute. Grantees shall submit a final draft of each written product to the Institute for review and approval. These drafts shall be submitted at least 30 days before the product is scheduled to be sent for publication or reproduction to permit Institute review and incorporation of any appropriate changes agreed upon by the grantee and the Institute. Grantees shall provide for timely reviews by the Institute of videotape or CD–ROM products at the treatment, script, rough cut, and final stages of development or their equivalents, prior to initiating the next stage of product development.

*f. Original Material.* All products prepared as the result of Institute-supported projects must be originally-developed material unless otherwise specified in the award documents. Material not originally developed that is included in such products must be properly identified, whether the material is in a verbatim or extensive paraphrase format.

11. Prohibition Against Litigation Support

No funds made available by the Institute may be used directly or indirectly to support legal assistance to parties in litigation, including cases involving capital punishment.

12. Reporting Requirements

a. Recipients of Institute funds other than Scholarships must submit Quarterly Progress and Financial Reports within 30 days of the close of each calendar quarter (that is, no later than January 30, April 30, July 30, and October 30). Two copies of each report must be sent. The Quarterly Progress Reports shall include a narrative description of project activities during the calendar quarter, the relationship between those activities and the task schedule and objectives set forth in the approved application or an approved adjustment thereto, any significant problem areas that have developed and how they will be resolved, and the activities scheduled during the next reporting period.

b. The quarterly financial status report must be submitted in accordance with section X.H.2. of this Guideline. A final project progress report and financial status report shall be submitted within 90 days after the end of the grant period in accordance with section X.L.2. of this Guideline.

13. Research

*a. Availability of Research Data for Secondary Analysis.* Upon request, grantees must make available for secondary analysis a diskette(s) or data tape(s) containing research and evaluation data collected under an Institute grant and the accompanying code manual. Grantees may recover the actual cost of duplicating and mailing or otherwise transmitting the data set and manual from the person or organization requesting the data. Grantees may provide the requested data set in the format in which it was created and analyzed.

*b. Confidentiality of Information.* Except as provided by Federal law other than the State Justice Institute Act, no recipient of financial assistance from SJI may use or reveal any research or statistical information furnished under the Act by any person and identifiable to any specific private person for any purpose other than the purpose for which the information was obtained. Such information and copies thereof shall be immune from legal process, and shall not, without the consent of the person furnishing such information, be admitted as evidence or used for any purpose in any action, suit, or other judicial, legislative, or administrative proceedings.

*c. Human Subject Protection.* All research involving human subjects shall be conducted with the informed consent of those subjects and in a manner that will ensure their privacy and freedom from risk or harm and the protection of persons who are not subjects of the research but would be affected by it, unless such procedures and safeguards would make the research impractical. In such instances, the Institute must approve procedures designed by the grantee to provide human subjects with relevant information about the research after their involvement and to minimize or eliminate risk or harm to those subjects due to their participation.

14. State and Local Court Applications

Each application for funding from a State or local court must be approved, consistent with State law, by the State's Supreme Court, or its designated agency or council. The Supreme Court or its designee shall receive, administer, and be accountable for all funds awarded on the basis of such an application. 42 U.S.C. 10705(b)(4). Appendix C to this Guideline lists the person to contact in each State regarding the administration of Institute grants to State and local courts.

15. Supplantation and Construction

To ensure that funds are used to supplement and improve the operation of State courts, rather than to support basic court services, funds shall not be used for the following purposes:

a. To supplant State or local funds supporting a program or activity (such as paying the salary of court employees who would be performing their normal duties as part of the project, or paying rent for space which is part of the court's normal operations);

b. To construct court facilities or structures, except to remodel existing facilities or to demonstrate new architectural or technological techniques, or to provide temporary facilities for new personnel or for personnel involved in a demonstration or experimental program; or

c. Solely to purchase equipment.

16. Suspension of Funding

After providing a recipient reasonable notice and opportunity to submit written documentation demonstrating why fund termination or suspension should not occur, the Institute may terminate or suspend funding of a project that fails to comply substantially with the Act, the Guideline, or the terms and conditions of the award. 42 U.S.C. 10708(a).

17. Title to Property

At the conclusion of the project, title to all expendable and nonexpendable personal property purchased with Institute funds shall vest in the recipient court, organization, or individual that purchased the property if certification is made to and approved by the Institute that the property will continue to be used for the authorized purposes of the Institute-funded project or other purposes consistent with the State Justice Institute Act. If such certification is not made or the Institute disapproves such certification, title to all such property with an aggregate or individual value of $1,000 or more shall vest in the Institute, which will direct the disposition of the property.

*B. Recipients of Curriculum Adaptation and Technical Assistance Grants*

In addition to the compliance requirements in A. in this section,

recipients of Curriculum Adaptation and Technical Assistance grants must comply with the following requirements:

1. Curriculum Adaptation Grantees

Recipients of Curriculum Adaptation grants must:

a. Comply with the same quarterly reporting requirements as other Institute grantees (see A.12. above in this section);

b. Include in each grant product a prominent acknowledgment that support was received from the Institute, along with the ''SJI'' logo and a disclaimer paragraph (see A.10.a. above in this section); and

c. Submit one copy of the manuals, handbooks, or conference packets developed under the grant at the conclusion of the grant period, along with a final report that includes any evaluation results and explains how the grantee intends to present the program in the future.

2. Technical Assistance Grantees

Technical Assistance grantees are subject to the same quarterly reporting requirements as other Institute grantees. (See A.12. above in this section.) At the conclusion of the grant period, a Technical Assistance grantee must complete a Technical Assistance Evaluation Form. The grantee also must submit to the Institute one copy of a final report that explains how it intends to act on the consultant's recommendations, as well as a copy of the consultant's written report.

3. Scholarship Recipients

a. Scholarship recipients are responsible for disseminating the information received from the course to their court colleagues locally, and if possible, throughout the State (e.g., by developing a formal seminar, circulating the written material, or discussing the information at a meeting or conference).

Recipients also must submit to the Institute a certificate of attendance at the program, an evaluation of the educational program they attended, and a copy of the notice of any scholarship funds received from other sources. A copy of the evaluation must be sent to the Chief Justice of their State. A State or local jurisdiction may impose additional requirements on scholarship recipients.

b. To receive the funds authorized by a scholarship award, recipients must submit a Scholarship Payment Voucher (Form S3) together with a tuition statement from the program sponsor, and a transportation fare receipt (or statement of the driving mileage to and from the recipient's home to the site of the educational program).

Scholarship Payment Vouchers should be submitted within 90 days after the end of the course which the recipient attended.

c. Scholarship recipients are encouraged to check with their tax advisors to determine whether the scholarship constitutes taxable income under Federal and State law.

## X. Financial Requirements

*A. Purpose*

The purpose of this section is to establish accounting system requirements and offer guidance on procedures to assist all grantees, subgrantees, contractors, and other organizations in:

1. Complying with the statutory requirements for the award, disbursement, and accounting of funds;

2. Complying with regulatory requirements of the Institute for the financial management and disposition of funds;

3. Generating financial data to be used in planning, managing, and controlling projects; and

4. Facilitating an effective audit of funded programs and projects.

*B. References*

Except where inconsistent with specific provisions of this Guideline, the following regulations, directives and reports are applicable to Institute grants and cooperative agreements under the same terms and conditions that apply to Federal grantees. The following circulars supplement the requirements of this section for accounting systems and financial recordkeeping and provide additional guidance on how these requirements may be satisfied. (Circulars may be obtained from OMB by calling 202–395–3080 or visiting the OMB website at www.whitehouse.gov/OMB).

1. Office of Management and Budget (OMB) Circular A–21, Cost Principles for Educational Institutions.

2. Office of Management and Budget (OMB) Circular A–87, Cost Principles for State and Local Governments.

3. Office of Management and Budget (OMB) Circular A–88 (revised), Indirect Cost Rates, Audit and Audit Follow-up at Educational Institutions.

4. Office of Management and Budget (OMB) Circular A–102, Uniform Administrative Requirements for Grants-in-Aid to State and Local Governments.

5. Office of Management and Budget (OMB) Circular A–110, Grants and Agreements with Institutions of Higher Education, Hospitals and other Non-Profit Organizations.

6. Office of Management and Budget (OMB) Circular A–128, Audits of State and Local Governments.

7. Office of Management and Budget (OMB) Circular A–122, Cost Principles for Non-profit Organizations.

8. Office of Management and Budget (OMB) Circular A–133, Audits of Institutions of Higher Education and Other Non-profit Institutions.

*C. Supervision and Monitoring Responsibilities*

1. Grantee Responsibilities

All grantees receiving awards from the Institute are responsible for the management and fiscal control of all funds. Responsibilities include accounting for receipts and expenditures, maintaining adequate financial records, and refunding expenditures disallowed by audits.

2. Responsibilities of State Supreme Court

a. Each application for funding from a State or local court must be approved, consistent with State law, by the State's Supreme Court, or its designated agency or council. (See III.H.)

b. The State Supreme Court or its designee shall receive all Institute funds awarded to such courts; be responsible for assuring proper administration of Institute funds; and be responsible for all aspects of the project, including proper accounting and financial recordkeeping by the subgrantee. These responsibilities include:

(1) Reviewing Financial Operations. The State Supreme Court or its designee should be familiar with, and periodically monitor, its subgrantees' financial operations, records system, and procedures. Particular attention should be directed to the maintenance of current financial data.

(2) Recording Financial Activities. The subgrantee's grant award or contract obligation, as well as cash advances and other financial activities, should be recorded in the financial records of the State Supreme Court or its designee in summary form. Subgrantee expenditures should be recorded on the books of the State Supreme Court OR evidenced by report forms duly filed by the subgrantee. Non-Institute contributions applied to projects by subgrantees should likewise be recorded, as should any project income resulting from program operations.

(3) Budgeting and Budget Review. The State Supreme Court or its designee should ensure that each subgrantee prepares an adequate budget as the basis

for its award commitment. The detail of each project budget should be maintained on file by the State Supreme Court.

(4) Accounting for Non-Institute Contributions. The State Supreme Court or its designee will ensure, in those instances where subgrantees are required to furnish non-Institute matching funds, that the requirements and limitations of the SJI Grant Guideline are applied to such funds.

(5) Audit Requirement. The State Supreme Court or its designee is required to ensure that subgrantees have met the necessary audit requirements set forth by the Institute (see sections K. below and IX.C.)

(6) Reporting Irregularities. The State Supreme Court, its designees, and its subgrantees are responsible for promptly reporting to the Institute the nature and circumstances surrounding any financial irregularities discovered.

*D. Accounting System*

The grantee is responsible for establishing and maintaining an adequate system of accounting and internal controls for itself and for ensuring that an adequate system exists for each of its subgrantees and contractors. An acceptable and adequate accounting system:

1. Properly accounts for receipt of funds under each grant awarded and the expenditure of funds for each grant by category of expenditure (including matching contributions and project income);
2. Assures that expended funds are applied to the appropriate budget category included within the approved grant;
3. Presents and classifies historical costs of the grant as required for budgetary and evaluation purposes;
4. Provides cost and property controls to assure optimal use of grant funds;
5. Is integrated with a system of internal controls adequate to safeguard the funds and assets covered, check the accuracy and reliability of the accounting data, promote operational efficiency, and assure conformance with any general or special conditions of the grant;
6. Meets the prescribed requirements for periodic financial reporting of operations; and
7. Provides financial data for planning, control, measurement, and evaluation of direct and indirect costs.

*E. Total Cost Budgeting and Accounting*

Accounting for all funds awarded by the Institute must be structured and executed on a total project cost basis. That is, total project costs, including Institute funds, State and local matching shares, and any other fund sources included in the approved project budget serve as the foundation for fiscal administration and accounting. Grant applications and financial reports require budget and cost estimates on the basis of total costs.

1. Timing of Matching Contributions

Matching contributions need not be applied at the exact time of the obligation of Institute funds. Ordinarily, the full matching share must be obligated during the award period; however, with the prior written permission of the Institute, contributions made following approval of the grant by the Institute's Board of Directors but before the beginning of the grant may be counted as match. Grantees that do not contemplate making matching contributions continuously throughout the course of a project, or on a task-by-task basis, are required to submit a schedule within 30 days after the beginning of the project period indicating at what points during the project period the matching contributions will be made. If a proposed cash match is not fully met, the Institute may reduce the award amount accordingly to maintain the ratio of grant funds to matching funds stated in the award agreement.

2. Records for Match

All grantees must maintain records which clearly show the source, amount, and timing of all matching contributions. In addition, if a project has included, within its approved budget, contributions which exceed the required matching portion, the grantee must maintain records of those contributions in the same manner as it does Institute funds and required matching shares. For all grants made to State and local courts, the State Supreme Court has primary responsibility for grantee/subgrantee compliance with the requirements of this section. (See C.2. above in this section.)

*F. Maintenance and Retention of Records*

All financial records, supporting documents, statistical records, and all other records pertinent to grants, subgrants, cooperative agreements, or contracts under grants must be retained by each organization participating in a project for at least three years for purposes of examination and audit. State Supreme Courts may impose record retention and maintenance requirements in addition to those prescribed in this section.

1. Coverage

The retention requirement extends to books of original entry, source documents supporting accounting transactions, the general ledger, subsidiary ledgers, personnel and payroll records, canceled checks, and related documents and records. Source documents include copies of all grant and subgrant awards, applications, and required grantee/subgrantee financial and narrative reports. Personnel and payroll records shall include the time and attendance reports for all individuals reimbursed under a grant, subgrant or contract, whether they are employed full-time or part-time. Time and effort reports will be required for consultants.

2. Retention Period

The three-year retention period starts from the date of the submission of the final expenditure report or, for grants which are renewed annually, from the date of submission of the annual expenditure report.

3. Maintenance

Grantees and subgrantees are expected to see that records of different fiscal years are separately identified and maintained so that requested information can be readily located. Grantees and subgrantees are also obligated to protect records adequately against fire or other damage. When records are stored away from the grantee's/subgrantee's principal office, a written index of the location of stored records should be on hand, and ready access should be assured.

4. Access

Grantees and subgrantees must give any authorized representative of the Institute access to and the right to examine all records, books, papers, and documents related to an Institute grant.

*G. Project-Related Income*

Records of the receipt and disposition of project-related income must be maintained by the grantee in the same manner as required for the project funds that gave rise to the income and must be reported to the Institute. (See H.2. below in this section) The policies governing the disposition of the various types of project-related income are listed below.

1. Interest

A State and any agency or instrumentality of a State, including institutions of higher education and hospitals, shall not be held accountable for interest earned on advances of project funds. When funds are awarded to subgrantees through a State, the

subgrantees are not held accountable for interest earned on advances of project funds. Local units of government and nonprofit organizations that are grantees must refund any interest earned. Grantees shall ensure minimum balances in their respective grant cash accounts.

2. Royalties

The grantee/subgrantee may retain all royalties received from copyrights or other works developed under projects or from patents and inventions, unless the terms and conditions of the grant provide otherwise.

3. Registration and Tuition Fees

Registration and tuition fees shall be used to pay project-related costs not covered by the grant, or to reduce the amount of grant funds needed to support the project. Registration and tuition fees may be used for other purposes only with the prior written approval of the Institute. Estimates of registration and tuition fees, and any expenses to be offset by the fees, should be included in the application budget forms and narrative.

4. Income From the Sale of Grant Products

a. When grant funds fully cover the cost of producing and disseminating a limited number of copies of a product, the grantee may, with the written prior approval of the Institute, sell additional copies reproduced at its expense at a reasonable market price, as long as the income is applied to court improvement projects consistent with the State Justice Institute Act. When grant funds only partially cover the costs of developing, producing and disseminating a product, the grantee may, with the written prior approval of the Institute, recover costs for developing, reproducing, and disseminating the material to the extent that those costs were not covered by Institute grant funds or grantee matching contributions. If the grantee recovers its costs in this manner, then amounts expended by the grantee to develop, produce, and disseminate the material may not be considered match.

b. If the sale of products occurs during the project period, the costs and income generated by the sales must be reported on the Quarterly Financial Status Reports and documented in an auditable manner. Whenever possible, the intent to sell a product should be disclosed in the concept paper and application or reported to the Institute in writing once a decision to sell products has been made. The grantee must request approval to recover its product development, reproduction, and dissemination costs as specified in section X.A.10.b.

5. Other

Other project income shall be treated in accordance with disposition instructions set forth in the grant's terms and conditions.

*H. Payments and Financial Reporting Requirements*

1. Payment of Grant Funds

The procedures and regulations set forth below are applicable to all Institute grant funds and grantees.

*a. Request for Advance or Reimbursement of Funds.* Grantees will receive funds on a ''check-issued'' basis. Upon receipt, review, and approval of a Request for Advance or Reimbursement by the Institute, a check will be issued directly to the grantee or its designated fiscal agent. A request must be limited to the grantee's immediate cash needs. The Request for Advance or Reimbursement, along with the instructions for its preparation, will be included in the official Institute award package.

*b. Continuation and On-Going Support Awards.* For purposes of submitting Requests for Advance or Reimbursement, recipients of continuation and on-going support grants should treat each grant as a new project and number the requests accordingly (i.e., on a grant rather than a project basis). For example, the first request for payment from a continuation grant or each year of an on-going support would be number 1, the second number 2, etc. (See Appendix B, Questions Frequently Asked by Grantees, for further guidance.)

*c. Termination of Advance and Reimbursement Funding.* When a grantee organization receiving cash advances from the Institute:

(1) Demonstrates an unwillingness or inability to attain program or project goals, or to establish procedures that will minimize the time elapsing between cash advances and disbursements, or cannot adhere to guideline requirements or special conditions;

(2) Engages in the improper award and administration of subgrants or contracts; or

(3) Is unable to submit reliable and/or timely reports; the Institute may terminate advance financing and require the grantee organization to finance its operations with its own working capital. Payments to the grantee shall then be made by check to reimburse the grantee for actual cash disbursements. In the event the grantee continues to be deficient, the Institute may suspend reimbursement payments until the deficiencies are corrected.

*d. Principle of Minimum Cash on Hand.* Grantees should request funds based upon immediate disbursement requirements. Grantees should time their requests to ensure that cash on hand is the minimum needed for disbursements to be made immediately or within a few days. Idle funds in the hands of subgrantees impair the goals of good cash management.

2. Financial Reporting

a. *General Requirements.* To obtain financial information concerning the use of funds, the Institute requires that grantees/subgrantees submit timely reports for review.

b. Two copies of the Financial Status Report are required from all grantees, other than scholarship recipients, for each active quarter on a calendar-quarter basis. This report is due within 30 days after the close of the calendar quarter. It is designed to provide financial information relating to Institute funds, State and local matching shares, project income, and any other sources of funds for the project, as well as information on obligations and outlays. A copy of the Financial Status Report, along with instructions for its preparation, is included in each official Institute Award package. If a grantee requests substantial payments for a project prior to the completion of a given quarter, the Institute may request a brief summary of the amount requested, by object class, to support the Request for Advance or Reimbursement.

c. *Additional Requirements for Continuation and On-going Support Grants.* Grantees receiving continuation or on-going support grants should number their quarterly Financial Status Reports on a grant rather than a project basis. For example, the first quarterly report for a continuation grant or each year of an on-going support award should be number 1, the second number 2, etc.

3. Consequences of Non-Compliance With Submission Requirement

Failure of the grantee to submit required financial and progress reports may result in suspension or termination of grant payments.

**I. Allowability of Costs**

1. General

Except as may be otherwise provided in the conditions of a particular grant, cost allowability is determined in accordance with the principles set forth in *OMB Circular A–87,* Cost Principles

for State and Local Governments; *A–21,* Cost Principles Applicable to Grants and Contracts with Educational Institutions; and *A–122,* Cost Principles for Non-Profit Organizations. No costs may be recovered to liquidate obligations incurred after the approved grant period. Circulars may be obtained from OMB by calling 202–395–3080 or visiting the OMB website at www.whitehouse.gov/OMB.

2. Costs Requiring Prior Approval

*a. Pre-agreement Costs.* The written prior approval of the Institute is required for costs considered necessary to the project but which occur prior to the award date of the grant.

*b. Equipment.* Grant funds may be used to purchase or lease only that equipment essential to accomplishing the goals and objectives of the project. The written prior approval of the Institute is required when the amount of automated data processing (ADP) equipment to be purchased or leased exceeds $10,000 or software to be purchased exceeds $3,000.

*c. Consultants.* The written prior approval of the Institute is required when the rate of compensation to be paid a consultant exceeds $300 a day. Institute funds may not be used to pay a consultant more than $900 per day.

3. Travel Costs

Transportation and per diem rates must comply with the policies of the grantee. If the grantee does not have an established written travel policy, then travel rates must be consistent with those established by the Institute or the Federal Government. Institute funds may not be used to cover the transportation or per diem costs of a member of a national organization to attend an annual or other regular meeting of that organization.

4. Indirect Costs

These are costs of an organization that are not readily assignable to a particular project but are necessary to the operation of the organization and the performance of the project. The cost of operating and maintaining facilities, depreciation, and administrative salaries are examples of the types of costs that are usually treated as indirect costs. The Institute's policy requires all costs to be budgeted directly; however, if a grantee has an indirect cost rate approved by a Federal agency as set forth below, the Institute will accept that rate.

*a. Approved Plan Available.* (1) The Institute will accept an indirect cost rate or allocation plan approved for a grantee during the preceding two years by any Federal granting agency on the basis of allocation methods substantially in accord with those set forth in the applicable cost circulars. A copy of the approved rate agreement must be submitted to the Institute.

(2) Where flat rates are accepted in lieu of actual indirect costs, grantees may not also charge expenses normally included in overhead pools, e.g., accounting services, legal services, building occupancy and maintenance, etc., as direct costs.

(3) When utilizing total direct costs as the base, organizations with approved indirect cost rates usually exclude contracts under grants from any overhead recovery. The negotiated agreement will stipulate that contracts are excluded from the base for overhead recovery.

*b. Establishment of Indirect Cost Rates.* To be reimbursed for indirect costs, a grantee must first establish an appropriate indirect cost rate. To do this, the grantee must prepare an indirect cost rate proposal and submit it to the Institute within three months after the start of the grant period to assure recovery of the full amount of allowable indirect costs. The rate must be developed in accordance with principles and procedures appropriate to the type of grantee institution involved as specified in the applicable OMB Circular.

*c. No Approved Plan.* If an indirect cost proposal for recovery of actual indirect costs is not submitted to the Institute within three months after the start of the grant period, indirect costs will be irrevocably disallowed for all months prior to the month that the indirect cost proposal is received.

*J. Procurement and Property Management Standards*

1. Procurement Standards

For State and local governments, the Institute has adopted the standards set forth in Attachment O of *OMB Circular A–102.* Institutions of higher education, hospitals; other non-profit organizations will be governed by the standards set forth in Attachment O of *OMB Circular A–110.*

2. Property Management Standards

The property management standards as prescribed in Attachment N of *OMB Circulars A–102* and *A–110* apply to all Institute grantees and subgrantees except as provided in section IX.A.17. All grantees/subgrantees are required to be prudent in the acquisition and management of property with grant funds. If suitable property required for the successful execution of projects is already available within the grantee or subgrantee organization, expenditures of grant funds for the acquisition of new property will be considered unnecessary.

*K. Audit Requirements*

1. Implementation

Each recipient of a grant from the Institute other than a scholarship, curriculum adaptation, or technical assistance grant must provide for an annual fiscal audit. This requirement also applies to a State or local court receiving a subgrant from the State Supreme Court). The audit may be of the entire grantee or subgrantee organization or of the specific project funded by the Institute. Audits conducted in accordance with the Single Audit Act of 1984 and *OMB Circular A–128,* or *OMB Circular A–133* will satisfy the requirement for an annual fiscal audit. The audit must be conducted by an independent Certified Public Accountant, or a State or local agency authorized to audit government agencies. Grantees must send two copies of the audit report to the Institute. Grantees that receive funds from a Federal agency and satisfy audit requirements of the cognizant Federal agency must submit two copies of the audit report prepared for that Federal agency to the Institute in order to satisfy the provisions of this section. Cognizant Federal agencies do not send reports to the Institute. Therefore, each grantee must send copies of this report directly to the Institute.

2. Resolution and Clearance of Audit Reports

Timely action on recommendations by responsible management officials is an integral part of the effectiveness of an audit. Each grantee must have policies and procedures for acting on audit recommendations by designating officials responsible for: follow-up; maintaining a record of the actions taken on recommendations and time schedules; responding to and acting on audit recommendations; and submitting periodic reports to the Institute on recommendations and actions taken.

3. Consequences of Non-Resolution of Audit Issues

Ordinarily, the Institute will not make a new grant award to an applicant that has an unresolved audit report involving Institute awards. Failure of the grantee to resolve audit questions may also result in the suspension or termination of payments for active Institute grants to that organization.

*L. Close-Out of Grants*

1. Definition

Close-out is the process by which the Institute determines that all applicable administrative and financial actions and all required grant work have been completed by both the grantee and the Institute.

2. Grantee Close-Out Requirements

Within 90 days after the end date of the grant or any approved extension thereof (see L.3. below in this section), the following documents must be submitted to the Institute by grantees (other than scholarship recipients):

*a. Financial Status Report.* The final report of expenditures must have no unliquidated obligations and must indicate the exact balance of unobligated funds. Any unobligated/unexpended funds will be deobligated from the award by the Institute. Final payment requests for obligations incurred during the award period must be submitted to the Institute prior to the end of the 90-day close-out period. Grantees on a check-issued basis, who have drawn down funds in excess of their obligations/expenditures, must return any unused funds as soon as it is determined that the funds are not required. In no case should any unused funds remain with the grantee beyond the submission date of the final financial status report.

*b. Final Progress Report.* This report should describe the project activities during the final calendar quarter of the project and the close-out period, including to whom project products have been disseminated; provide a summary of activities during the entire project; specify whether all the objectives set forth in the approved application or an approved adjustment have been met and, if any of the objectives have not been met, explain why not; and discuss what, if anything, could have been done differently that might have enhanced the impact of the project or improved its operation.

These reporting requirements apply at the conclusion of any non-scholarship grant, even when the project will continue under a continuation or on-going support grant.

3. Extension of Close-Out Period

Upon the written request of the grantee, the Institute may extend the close-out period to assure completion of the Grantee's close-out requirements. Requests for an extension must be submitted at least 14 days before the end of the close-out period and must explain why the extension is necessary and what steps will be taken to assure that all the grantee's responsibilities will be met by the end of the extension period.

## XI. Grant Adjustments

All requests for programmatic or budgetary adjustments requiring Institute approval must be submitted in a timely manner by the project director. All requests for changes from the approved application will be carefully reviewed for both consistency with this Guideline and the enhancement of grant goals and objectives.

*A. Grant Adjustments Requiring Prior Written Approval*

There are several types of grant adjustments that require the prior written approval of the Institute. Examples of these adjustments include:

1. Budget revisions among direct cost categories that individually or in the aggregate exceed five percent of the approved original budget or the most recently approved revised budget. The Institute will view budget revisions cumulatively.

For continuation and on-going support grants, funds from the original award may be used during the new grant period and funds awarded through a continuation or on-going support grant may be used to cover project-related expenditures incurred during the original award period, with the prior written approval of the Institute.

2. A change in the scope of work to be performed or the objectives of the project (see D. below in this section).

3. A change in the project site.

4. A change in the project period, such as an extension of the grant period and/or extension of the final financial or progress report deadline (see E. below).

5. Satisfaction of special conditions, if required.

6. A change in or temporary absence of the project director (see F. and G. below).

7. The assignment of an employee or consultant to a key staff position whose qualifications were not described in the application, or a change of a person assigned to a key project staff position (see section IX.A.2.).

8. A change in or temporary absence of the person responsible for the financial management and financial reporting for the grant.

9. A change in the name of the grantee organization.

10. A transfer or contracting out of grant-supported activities (see H. below).

11. A transfer of the grant to another recipient.

12. Preagreement costs (see section X.I.2.a.).

13. The purchase of automated data processing equipment and software (see section X.I.2.b.)

14. Consultant rates (see section X.I.2.c.).

15. A change in the nature or number of the products to be prepared or the manner in which a product would be distributed.

*B. Requests for Grant Adjustments*

All grantees and subgrantees must promptly notify their SJI program managers, in writing, of events or proposed changes that may require adjustments to the approved project design. In requesting an adjustment, the grantee must set forth the reasons and basis for the proposed adjustment and any other information the program manager determines would help the Institute's review.

*C. Notification of Approval/Disapproval*

If the request is approved, the grantee will be sent a Grant Adjustment signed by the Executive Director or his designee. If the request is denied, the grantee will be sent a written explanation of the reasons for the denial.

*D. Changes in the Scope of the Grant*

Major changes in scope, duration, training methodology, or other significant areas must be approved in advance by the Institute. A grantee may make minor changes in methodology, approach, or other aspects of the grant to expedite achievement of the grant's objectives with subsequent notification of the SJI program manager.

*E. Date Changes*

A request to change or extend the grant period must be made at least 30 days in advance of the end date of the grant. A revised task plan should accompany a request for a no-cost extension of the grant period, along with a revised budget if shifts among budget categories will be needed. A request to change or extend the deadline for the final financial report or final progress report must be made at least 14 days in advance of the report deadline (see section X.L.3.).

*F. Temporary Absence of the Project Director*

Whenever an absence of the project director is expected to exceed a continuous period of one month, the plans for the conduct of the project director's duties during such absence must be approved in advance by the Institute. This information must be provided in a letter signed by an authorized representative of the grantee/

subgrantee at least 30 days before the departure of the project director, or as soon as it is known that the project director will be absent. The grant may be terminated if arrangements are not approved in advance by the Institute.

*G. Withdrawal of/Change in Project Director*

If the project director relinquishes or expects to relinquish active direction of the project, the Institute must be notified immediately. In such cases, if the grantee/subgrantee wishes to terminate the project, the Institute will forward procedural instructions upon notification of such intent. If the grantee wishes to continue the project under the direction of another individual, a statement of the candidate's qualifications should be sent to the Institute for review and approval. The grant may be terminated if the qualifications of the proposed individual are not approved in advance by the Institute.

*H. Transferring or Contracting Out of Grant-Supported Activities*

No principal activity of a grant-supported project may be transferred or contracted out to another organization without specific prior approval by the Institute. All such arrangements must be formalized in a contract or other written agreement between the parties involved. Copies of the proposed contract or agreement must be submitted for prior approval of the Institute at the earliest possible time. The contract or agreement must state, at a minimum, the activities to be performed, the time schedule, the policies and procedures to be followed, the dollar limitation of the agreement, and the cost principles to be followed in determining what costs, both direct and indirect, will be allowed. The contract or other written agreement must not affect the grantee's overall responsibility for the direction of the project and accountability to the Institute.

## State Justice Institute Board of Directors

Robert A. Miller, Chairman, Chief Justice, Supreme Court of South Dakota, Pierre, SD
Joseph F. Baca, Vice-Chairman, Justice, New Mexico Supreme Court, Santa Fe, NM
Sandra A. O'Connor, Secretary, States Attorney of Baltimore County, Towson, MD
Terrence B. Adamson, Esq., Executive Committee Member, Senior Vice-President, The National Geographic Society, Washington, D.C
Mr. Robert N. Baldwin, State Court Administrator, Supreme Court of Virginia, Richmond, VA
Carlos R. Garza, Esq., Administrative Judge (ret.), Vienna, VA
Sophia H. Hall, Presiding Judge, Juvenile Court, Circuit Court of Cook County, Chicago, IL
Tommy Jewell, District Judge, Albuquerque, NM
Arthur A. McGiverin, Chief Justice, Supreme Court of Iowa, Des Moines, IA Keith McNamara, Esq., McNamara & McNamara, Columbus, OH
Florence K. Murray, Justice (ret.), Supreme Court of Rhode Island, Providence, RI
David I. Tevelin, Executive Director (ex officio)

**David I. Tevelin,**

*Executive Director.*

## Appendix A—Recommendations to Grant Writers

Over the past 13 years, Institute staff have reviewed approximately 3,600 concept papers and 1,700 applications. On the basis of those reviews, inquiries from applicants, and the views of the Board, the Institute offers the following recommendations to help potential applicants present workable, understandable proposals that can meet the funding criteria set forth in this Guideline.

The Institute suggests that applicants make certain that they address the questions and issues set forth below when preparing a concept paper or application. Concept papers and applications should, however, be presented in the formats specified in sections VI. and VII. of the Guideline, respectively.

*1. What is the subject or problem you wish to address?*

Describe the subject or problem and how it affects the courts and the public. Discuss how your approach will improve the situation or advance the state of the art or knowledge, and explain why it is the most appropriate approach to take. When statistics or research findings are cited to support a statement or position, the source of the citation should be referenced in a footnote or a reference list.

*2. What do you want to do?*

Explain the goal(s) of the project in simple, straightforward terms. The goals should describe the intended consequences or expected overall effect of the proposed project (e.g., to enable judges to sentence drug-abusing offenders more effectively, or to dispose of civil cases within 24 months), rather than the tasks or activities to be conducted (e.g., hold three training sessions, or install a new computer system).

To the greatest extent possible, an applicant should avoid a specialized vocabulary that is not readily understood by the general public. Technical jargon does not enhance a paper, nor does a clever but uninformative title.

*3. How will you do it?*

Describe the methodology carefully so that what you propose to do and how you would do it are clear. All proposed tasks should be set forth so that a reviewer can see a logical progression of tasks, and relate those tasks directly to the accomplishment of the project's goal(s). When in doubt about whether to provide a more detailed explanation or to assume a particular level of knowledge or expertise on the part of the reviewers, provide the additional information. A description of project tasks also will help identify necessary budget items. All staff positions and project costs should relate directly to the tasks described. The Institute encourages applicants to attach letters of cooperation and support from the courts and related agencies that will be involved in or directly affected by the proposed project.

*4. How will you know it works?*

Include an evaluation component that will determine whether the proposed training, procedure, service, or technology accomplished the objectives it was designed to meet. Concept papers and applications should present the criteria that will be used to evaluate the project's effectiveness; identify program elements which will require further modification; and describe how the evaluation will be conducted, when it will occur during the project period, who will conduct it, and what specific measures will be used. In most instances, the evaluation should be conducted by persons not connected with the implementation of the procedure, training, service, or technique, or the administration of the project.

The Institute has also prepared a more thorough list of recommendations to grant writers regarding the development of project evaluation plans. Those recommendations are available from the Institute upon request.

*5. How will others find out about it?*

Include a plan to disseminate the results of the training, research, or demonstration beyond the jurisdictions and individuals directly affected by the project. The plan should identify the specific methods which will be used to inform the field about the project, such as the publication of law review or journal articles, or the distribution of key materials. A statement that a report or research findings ''will be made available to'' the field is not sufficient. The specific means of distribution or dissemination as well as the types of recipients should be identified. Reproduction and dissemination costs are allowable budget items.

*6. What are the specific costs involved?*

The budget in both concept papers and applications should be presented clearly. Major budget categories such as personnel, benefits, travel, supplies, equipment, and indirect costs should be identified separately. The components of ''Other'' or ''Miscellaneous'' items should be specified in the application budget narrative, and should not include set-asides for undefined contingencies.

*7. What, if any, match is being offered?*

Courts and other units of State and local government (not including publicly-supported institutions of higher education) are required by the State Justice Institute Act to contribute a match (cash, non-cash, or both) of at least 50 percent of the grant funds requested from the Institute. All other applicants also are encouraged to provide a matching contribution to assist in meeting the costs of a project.

The match requirement works as follows: If, for example, the total cost of a project is anticipated to be $150,000, a State or local court or executive branch agency may request up to $100,000 from the Institute to implement the project. The remaining $50,000 (50% of the $100,000 requested from SJI) must be provided as match.

Cash match includes funds directly contributed to the project by the applicant, or by other public or private sources. It does not include income generated from tuition fees or the sale of project products. Non-cash match refers to in-kind contributions by the applicant, or other public or private sources. This includes, for example, the monetary value of time contributed by existing personnel or members of an advisory committee (but not the time spent by participants in an educational program attending program sessions). When match is offered, the nature of the match (cash or in-kind) should be explained and, at the application stage, the tasks and line items for which costs will be covered wholly or in part by match should be specified.

*8. Which of the two budget forms should be used?*

Section VII.A.1.c. of the SJI Grant Guideline encourages use of the spreadsheet format of Form C1 if the application requests $100,000 or more. Form C1 also works well for projects with discrete tasks, regardless of the dollar value of the project. Form C, the tabular format, is preferred for projects lacking a number of discrete tasks, or for projects requiring less than $100,000 of Institute funding. Generally, use the form that best lends itself to representing most accurately the budget estimates for the project.

*9. How much detail should be included in the budget narrative?*

The budget narrative of an application should provide the basis for computing all project-related costs, as indicated in section VII.A.4. of the Guideline. To avoid common shortcomings of application budget narratives, applicants should include the following information:

Personnel estimates that accurately provide the amount of time to be spent by personnel involved with the project and the total associated costs, including current salaries for the designated personnel (e.g., Project Director, 50% for one year, annual salary of $50,000 = $25,000). If salary costs are computed using an hourly or daily rate, the annual salary and number of hours or days in a work-year should be shown.

Estimates for supplies and expenses supported by a complete description of the supplies to be used, the nature and extent of printing to be done, anticipated telephone charges, and other common expenditures, with the basis for computing the estimates included (e.g., 100 reports × 75 pages each × .05/page = $375.00). Supply and expense estimates offered simply as ''based on experience'' are not sufficient.

In order to expedite Institute review of the budget, make a final comparison of the amounts listed in the budget narrative with those listed on the budget form. In the rush to complete all parts of the application on time, there may be many last-minute changes; unfortunately, when there are discrepancies between the budget narrative and the budget form or the amount listed on the application cover sheet, it is not possible for the Institute to verify the amount of the request. A final check of the numbers on the form against those in the narrative will preclude such confusion.

*10. What travel regulations apply to the budget estimates?*

Transportation costs and per diem rates must comply with the policies of the applicant organization, and a copy of the applicant's travel policy should be submitted as an appendix to the application. If the applicant does not have a travel policy established in writing, then travel rates must be consistent with those established by the Institute or the Federal Government (a copy of the Institute's travel policy is available upon request). The budget narrative should state which policies apply to the project.

The budget narrative also should include the estimated fare, the number of persons traveling, the number of trips to be taken, and the length of stay. The estimated costs of travel, lodging, ground transportation, and other subsistence should be listed and explained separately. It is preferable for the budget to be based on the actual costs of traveling to and from the project or meeting sites. If the points of origin or destination are not known at the time the budget is prepared, an average airfare may be used to estimate the travel costs. For example, if it is anticipated that a project advisory committee will include members from around the country, a reasonable airfare from a central point to the meeting site, or the average of airfares from each coast to the meeting site may be used. Applicants should arrange travel so as to be able to take advantage of advance-purchase price discounts whenever possible.

*11. May grant funds be used to purchase equipment?*

Generally, grant funds may be used to purchase only the equipment that is necessary to demonstrate a new technological application in a court, or that is otherwise essential to accomplishing the objectives of the project. The budget narrative must list the equipment to be purchased and explain why the equipment is necessary to the success of the project. Written prior approval is required when the amount of computer hardware to be purchased or leased exceeds $10,000, or the software to be purchased exceeds $3000.

*12. To what extent may indirect costs be included in the budget estimates?*

It is the policy of the Institute that all costs should be budgeted directly; however, if an indirect cost rate has been approved by a Federal agency within the last two years, an indirect cost recovery estimate may be included in the budget. A copy of the approved rate agreement should be submitted as an appendix to the application.

If an applicant does not have an approved rate agreement and cannot budget directly for all costs, an indirect cost rate proposal should be prepared in accordance with Section X.I.4. of the Guideline, based on the applicant's audited financial statements for the prior fiscal year. (Applicants lacking an audit should budget all project costs directly.)

*13. What meeting costs may be covered with grant funds?*

SJI grant funds may cover the reasonable cost of meeting rooms, necessary audio-visual equipment, meeting supplies, and working meals.

*14. Does the budget truly reflect all costs required to complete the project?*

After preparing the program narrative portion of the application, applicants may find it helpful to list all the major tasks or activities required by the proposed project, including the preparation of products, and note the individual expenses, including personnel time, related to each. This will help to ensure that, for all tasks described in the application (e.g., development of a videotape, research site visits, distribution of a final report), the related costs appear in the budget and are explained correctly in the budget narrative.

## Appendix B—Questions Frequently Asked by Grantees

The Institute's staff works with grantees to help assure the smooth operation of the project and compliance with the Guideline. On the basis of monitoring more than 1,000 grants, the Institute staff offers the following suggestions to aid grantees in meeting the administrative and substantive requirements of their grants.

*1. After the grant has been awarded, when are the first quarterly reports due?*

Quarterly Progress Reports and Financial Status Reports must be submitted within 30 days after the end of every calendar quarter—i.e., no later than January 30, April 30, July 30, and October 30—regardless of the project's start date. The reporting periods covered by each quarterly report end 30 days before the respective deadline for the report. When an award period begins December 1, for example, the first Quarterly Progress Report describing project activities between December 1 and December 31 will be due on January 30. A Financial Status Report should be submitted even if funds have not been obligated or expended.

By documenting what has happened over the past three months, Quarterly Progress Reports provide an opportunity for project staff and Institute staff to resolve any questions before they become problems, and make any necessary changes in the project time schedule, budget allocations, etc. The Quarterly Project Report should describe project activities, their relationship to the approved timeline, and any problems encountered and how they were resolved, and outline the tasks scheduled for the coming quarter. It is helpful to attach copies of relevant memos, draft products, or other requested information. An original and one copy of a Quarterly Progress Report and attachments should be submitted to the Institute.

Additional Quarterly Progress Report or Financial Status Report forms may be obtained from the grantee's Program Manager at SJI, or photocopies may be made from the supply received with the award.

*2. Do reporting requirements differ for continuation and on-going support grants?*

Recipients of continuation or on-going support grants are required to submit quarterly progress and financial status reports on the same schedule and with the same information as recipients of a grant for a single new project.

A continuation grant and each yearly grant under an on-going support award should be considered as a separate phase of the project. The reports should be numbered on a grant rather than project basis. Thus, the first quarterly report filed under a continuation grant or a yearly increment of an on-going support award should be designated as number one, the second as number two, and so on, through the final progress and financial status reports due within 90 days after the end of the grant period.

*3. What information about project activities should be communicated to SJI?*

In general, grantees should provide prior notice of critical project events such as advisory board meetings or training sessions so that the Institute Program Manager can attend if possible. If methodological, schedule, staff, budget allocations, or other significant changes become necessary, the grantee should contact the Program Manager prior to implementing any of these changes, so that possible questions may be addressed in advance. Questions concerning the financial requirements section of the Guideline, quarterly financial reporting, or payment requests, should be addressed to the Grants Financial Manager listed in the award letter.

It is helpful to include the grant number assigned to the award on all correspondence to the Institute.

*4. Why are special conditions attached to the award document?*

In some instances, a list of special conditions is attached to the award document. Special conditions may be imposed to establish a schedule for reporting certain key information, assure that the Institute has an opportunity to offer suggestions at critical stages of the project, and provide reminders of some (but not necessarily all) of the requirements contained in the Grant Guideline. Accordingly, it is important for grantees to check the special conditions carefully and discuss with their Program Managers any questions or problems they may have with the conditions. Most concerns about timing, response time, and the level of detail required can be resolved in advance through a telephone conversation. The Institute's primary concern is to work with grantees to assure that their projects accomplish their objectives, not to enforce rigid bureaucratic requirements. However, if a grantee fails to comply with a special condition or with other grant requirements, the Institute may, after proper notice, suspend payment of grant funds or terminate the grant.

Sections IX., X., and XI. of the Grant Guideline contain the Institute's administrative and financial requirements. Institute Finance Division staff are always available to answer questions and provide assistance regarding these provisions.

*5. What is a Grant Adjustment?*

A Grant Adjustment is the Institute's form for acknowledging the satisfaction of special conditions, or approving changes in grant activities, schedule, staffing, sites, or budget allocations requested by the project director. It also may be used to correct errors in grant documents or deobligate funds from the grant.

*6. What schedule should be followed in submitting requests for reimbursements or advance payments?*

Requests for reimbursements or advance payments may be made at any time after the project start date and before the end of the 90-day close-out period. However, the Institute follows the U.S. Treasury's policy limiting advances to the minimum amount required to meet immediate cash needs. Given normal processing time, grantees should not seek to draw down funds for periods greater than 30 days from the date of the request.

*7. Do procedures for submitting requests for reimbursement or advance payment differ for continuation or on-going support grants?*

The basic procedures are the same for any grant. A continuation grant or the yearly grant under an on-going support award should be considered as a separate phase of the project. Payment requests should be numbered on a grant rather than a project basis. The first request for funds from a continuation grant or a yearly increment under an on-going support award should be designated as number one, the second as number two, and so on through the final payment request for that grant.

*8. If things change during the grant period, can funds be reallocated from one budget category to another?*

The Institute recognizes that some flexibility is required in implementing a project design and budget. Thus, grantees may shift funds among direct cost budget categories. When any one reallocation or the cumulative total of reallocations are expected to exceed five percent of the approved project budget, a grantee must specify the proposed changes, explain the reasons for the changes, and request Institute approval.

The same standard applies to continuation and on-going support grants. In addition, prior written Institute approval is required to shift leftover funds from the original award to cover activities to be conducted under the renewal award, or to use renewal grant monies to cover costs incurred during the original grant period.

*9. What is the 90-day close-out period?*

Following the last day of the grant, a 90-day period is provided to allow for all grant-related bills to be received and posted, and grant funds drawn down to cover these expenses. No obligations of grant funds may be incurred during this period. The last day on which an expenditure of grant funds can be obligated is the end date of the grant period. Similarly, the 90-day period is not intended as an opportunity to finish and disseminate grant products. This should occur before the end of the grant period.

During the 90 days following the end of the award period, all monies that have been obligated should be expended. All payment requests must be received by the end of the 90-day ''close-out-period.'' Any unexpended monies held by the grantee that remain after the 90-day follow-up period must be returned to the Institute. Any funds remaining in the grant that have not been drawn down by the grantee will be deobligated.

*10. Are funds granted by SJI ''Federal'' funds?*

The State Justice Institute Act provides that, except for purposes unrelated to this question, ''the Institute shall not be considered a department, agency, or instrumentality of the Federal Government.'' 42 U.S.C. § 10704(c)(1). Because SJI receives appropriations from Congress, some grantee auditors have reported SJI grants funds as ''Other Federal Assistance.'' This classification is acceptable to SJI but is not required.

*11. If SJI is not a Federal Agency, do OMB circulars apply with respect to audits?*

Unless they are inconsistent with the express provisions of the SJI Grant Guideline, Office of Management and Budget (OMB) Circulars A–110, A–21, A–87, A–88, A–102, A–122, A–128 and A–133 are incorporated into the Grant Guideline by reference. Because the Institute's enabling legislation specifically requires the Institute to ''conduct, or require each recipient to provide for, an annual fiscal audit'' [see 42 U.S.C. § 10711(c)(1)], the Grant Guideline sets forth options for grantees to comply with this statutory requirement. (See Section X.K.)

SJI will accept audits conducted in accordance with the Single Audit Act of 1984 and OMB Circulars A–128, or A–133, in satisfaction of the annual fiscal audit requirement. Grantees that are required to undertake these audits in conjunction with Federal grants may include SJI funds as part of the audit even if the receipt of SJI funds would not require such audits. This approach gives grantees an option to fold SJI funds into the governmental audit rather than to undertake a separate audit to satisfy SJI's Guideline requirements.

In sum, educational and nonprofit organizations that receive payments from the Institute that are sufficient to meet the applicability thresholds of OMB Circular A–133 must have their annual audit conducted in accordance with Government Auditing Standards issued by the Comptroller General of the United States rather than with generally accepted auditing standards. Grantees in this category that receive amounts below the minimum threshold referenced in Circular A–133 must also submit an annual audit to SJI, but they would have the option to conduct an audit of the entire grantee organization in accordance with generally accepted auditing standards; include SJI funds in an audit of Federal funds

conducted in accordance with the Single Audit Act of 1984 and OMB Circulars A–128 or A–133; or conduct an audit of only the SJI funds in accordance with generally accepted auditing standards. (See Guideline Section X.K.) Circulars may be obtained from OMB by calling 202–395–3080 or visiting the OMB website at www.whitehouse.gov/OMB.

*12. Does SJI have a CFDA number?*

Auditors often request that a grantee provide the Institute's Catalog of Federal Domestic Assistance (CFDA) number for guidance in conducting an audit in accordance with Government Accounting Standards.

Because SJI is not a Federal agency, it has not been issued such a number, and there are no additional compliance tests to satisfy under the Institute's audit requirements beyond those of a standard governmental audit.

Moreover, because SJI is not a Federal agency, SJI funds should not be aggregated with Federal funds to determine if the applicability threshold of Circular A–133 has been reached. For example, if in fiscal year 1997 grantee ''X'' received $10,000 in Federal funds from a Department of Justice (DOJ) grant program and $20,000 in grant funds from SJI, the minimum A–133 threshold would not be met. The same distinction would preclude an auditor from considering the additional SJI funds in determining what Federal requirements apply to the DOJ funds.

Grantees who are required to satisfy either the Single Audit Act, OMB Circulars A–128, or A–133 and who include SJI grant funds in those audits, need to remember that because of its status as a private non-profit corporation, SJI is not on routing lists of cognizant Federal agencies. Therefore, the grantee needs to submit a copy of the audit report prepared for such a cognizant Federal agency directly to SJI. The Institute's audit requirements may be found in Section X.K. of the Grant Guideline.

## Appendix C—List of State Contacts Regarding Administration of Institute Grants to State and Local Courts

Mr. Frank Gregory, Administrative Director, Administrative Office of the Courts, 300 Dexter Avenue, Montgomery, AL 36104, (334) 242–0300

Ms. Stephanie J. Cole, Administrative Director, Alaska Court System, 303 K Street, Anchorage, AK 99501, (907) 264–0547

Mr. Eliu F. Paopao, Court Administrator, High Court of American Samoa, P.O. Box 309, Pago Pago, AS 96799, 011 (684) 633–1150

Mr. David K. Byers, Administrative Director of the Courts, Supreme Court of Arizona, 1501 West Washington Street, Suite 411, Phoenix, AZ 85007, (602) 542–9301

Mr. James D. Gingerich, Director, Administrative Office of the Courts, Supreme Court of Arkansas, Justice Building, Little Rock, AR 72201, (501) 682–9400

Mr. William C. Vickrey, State Court Administrator, Administrative Office of the Courts, 455 Golden Gate Avenue, Suite 5622, San Francisco, CA 94107, (415) 865–4200

Mr. Steven V. Berson, State Court Administrator, Colorado Judicial Department, 1301 Pennsylvania Street, Suite 300, Denver, CO 80203–5012, (303) 861–1111

Honorable Robert C. Leuba, Chief Court Administrator, Supreme Court of Connecticut, 231 Capitol Avenue, Drawer N, Station A, Hartford, CT 06106, (860) 566–4461

Mr. Lawrence P. Webster, Director, Administrative Office of the Courts, Carvel State Office Building, 11th Floor, 820 N. French Street, Wilmington, DE 19801, (302) 577–8481

Mr. Ulysses Hammond, Executive Officer, District of Columbia Courts, 500 Indiana Avenue, N.W., Washington, D.C. 20001, (202) 879–1700

Mr. Kenneth Palmer, State Courts Administrator, Supreme Court Building, 500 South Duval Street, Tallahassee, FL 32399–0156, (850) 922–5081

Mr. George Lange III, Director, Administrative Office of the Courts, 47 Trinity Avenue, Suite 414, Atlanta, GA 30334, (404) 656–5171

Mr. Daniel J. Tydingco, Executive Officer, Supreme Court of Guam, Guam Judicial Center, 120 West O'Brien Drive, Agana, Guam 96910, 011 (671) 475–3278

Mr. Michael F. Broderick, Administrative Director of the Courts, The Judiciary, State of Hawaii, 417 S. King Street, Room 206, Honolulu, HI 96813, (808) 539–4900

Ms. Patricia Tobias, Administrative Director of the Courts, Supreme Court Building, 451 West State Street, Boise, ID 83702, (208) 334–2246

Mr. Joseph A. Schillaci, Director, Administrative Office of the Illinois Courts, 222 N. LaSalle Street, 13th Floor, Chicago, IL 60601, (312) 793–3250

Ms. Lilia G. Judson, Executive Director, Division of State Court Administration, Indiana Supreme Court, 115 W. Washington, Suite 1080, Indianapolis, IN 46204–3417, (317) 232–2542

Mr. William J. O'Brien, State Court Administrator, Supreme Court of Iowa, State House, Des Moines, IA 50319, (515) 281–5241

Dr. Howard P. Schwartz, Judicial Administrator, Kansas Judicial Center, 301 West 10th Street, Topeka, KS 66612, (785) 296–4873

Ms. Cicely Jaracz Lambert, Director, Administrative Office of the Courts, 100 Mill Creek Park, Frankfort, KY 40601–9230, (502) 573–2350

Dr. Hugh M. Collins, Judicial Administrator, Supreme Court of Louisiana, 1555 Poydras Street, Suite 1540, New Orleans, LA 70112–3701, (504) 568–5747

Mr. James T. Glessner, State Court Administrator, Administrative Office of the Courts, P.O. Box 4820, Portland, ME 04112–4820, (207) 822–0792

Mr. George B. Riggin, Jr., State Court Administrator, Administrative Office of the Courts, Courts of Appeal Bldg., 361 Rowe Boulevard, Annapolis, MD 21401, (410) 260–1401

Honorable Barbara A. Dortch-Okara, Chief Justice for Administration and Management, Administrative Office of the Trial Courts, Two Center Plaza, Fifth Floor, Boston, MA 02108, (617) 742–8575

Mr. John D. Ferry, Jr., State Court Administrator, 309 N. Washington Square, Lansing, MI 48909, (517) 373–2222

Ms. Sue K. Dosal, State Court Administrator, Supreme Court of Minnesota, 25 Constitution Avenue, St. Paul, MN 55155, (651) 296–2474

Mr. Rick D. Patt, Acting Director, Administrative Office of the Courts, Supreme Court of Mississippi, P.O. Box 117, Jackson, MS 39205, (601) 354–7408

Mr. Ronald L. Larkin, State Courts Administrator, Supreme Court of Missouri, P.O. Box 104480, Jefferson City, MO 65110, (573) 751–3585

Mr. Patrick A. Chenovick, State Court Administrator, Supreme Court of Montana, Justice Building, Room 315, 215 North Sanders, Helena, MT 59620–3002, (406) 444–2621

Mr. Joseph C. Steele, State Court Administrator, Administrative Office of the Courts/Probation, State Capitol Building, Room 1220, Lincoln, NE 68509, (404) 471–3730

Ms. Karen Kavenau, State Court Administrator, Administrative Office of the Courts, Supreme Court Building, 201 South Carson Street, Suite 250, Carson City, NV 89701–4702, (702) 687–5076

Mr. Donald Goodnow, Director, Administrative Office of the Courts, Two Noble Drive, Concord, NH 03301, (603) 271–2521

Honorable Richard J. Williams, Acting Administrative Director, Administrative Office of the Courts, 25 Market Street, Trenton, NJ 08625, (609) 984–0275

Mr. John M. Greacen, Director, Administrative Office of the Courts, 237 Don Gaspar, Room 25, Sante Fe, NM 87501–2178, (505) 827–4800

Honorable Jonathan Lippman, Chief Administrative Judge, Office of Court Administration, 25 Beaver Street, 11th Floor, New York, NY 10004 (212) 428–2100

Honorable Thomas W. Ross, Administrative Director of the Courts, North Carolina Administrative Office of the Courts, 2 East Morgan Street, Raleigh, NC 27601, (919) 733–7107

Mr. Keithe E. Nelson, State Court Administrator, Supreme Court of North Dakota, State Capitol Building, 600 East Boulevard Avenue, Dept. 180, Bismarck, ND 58505–0530, (701) 328–4216,

Ms. Margarita M. Palacios, Acting Director, Supreme Court of the Commonwealth of the Northern Mariana Islands, P.O. Box 2165 CK, Saipan, MP 96950, (670) 236–9800

Mr. Steven C. Hollon, Administrative Director, Supreme Court of Ohio, State Office Tower, 30 East Broad Street, Columbus, OH 43266–0419, (614) 466–2653

Mr. Howard W. Conyers, Administrative Director of the Courts, Administrative Office of the Courts, 1925 N. Stiles, Suite 305, Oklahoma City, OK 73105, (405) 521–2450

Ms. Kingsley W. Click, State Court Administrator, Office of the State Court

Administrator, Supreme Court Building, Salem, OR 97310, (503) 986–5900

Ms. Nancy M. Sobolevitch, Court Administrator, Administrative Office of Pennsylvania Courts, Supreme Court of Pennsylvania, 1515 Market Street, Suite 1414, Philadelphia, PA 19102, (215) 560–6337

Ms. Mercedes M. Bauermeister, Administrative Director of the Courts, General Court of Justice, Office of Court Administration, 6 Vela Street, Hato Rey, PR 00919, (787) 763–3358

Dr. Robert C. Harrall, State Court Administrator, Supreme Court of Rhode Island, 250 Benefit Street, Providence, RI 02903, (401) 277–3263

Ms. Rosalyn Woodson Frierson, Director, South Carolina Court Administration, 1015 Sumter Street, Suite 200, Columbia, SC 29201, (803) 734–1800

Mr. Michael L. Buenger, State Court Administrator, Unified Judicial System, 500 East Capitol Avenue, Pierre, SD 57501, (605) 773–3474

Ms. Cornelia A. Clark, Director, Administrative Office of the Courts, Tennessee Supreme Court, 511 Union Street, Suite 600, Nashville, TN 37243–0607, (615) 741–2687

Mr. Jerry L. Benedict, Administrative Director, Office of Court Administration, Tom C. Clark State Courts Building 205 West 14th Street, Suite 600, Austin, TX 78701, (512) 463–1625

Mr. Daniel Becker, State Court Administrator 450 South State, Salt Lake City, UT 84114–0241, (801) 578–3806

Mr. Lee Suskin, Court Administrator, Supreme Court of Vermont, 109 State Street, Montpelier, VT 05609–0701, (802) 828–3278

Ms. Viola E. Smith, Court Administrator, Territorial Court of the Virgin Islands, P.O. Box 70, Charlotte Amalie, St. Thomas, Virgin Islands 00804, (340) 774–6680

Mr. Robert N. Baldwin, State Court Administrator, Supreme Court of Virginia, 100 North Ninth Street, 3rd Floor, Richmond, VA 23219, (804) 786–6455

Ms. Mary Campbell McQueen, State Court Administrator, Supreme Court of Washington, Temple of Justice, P.O. Box 41174, Olympia, WA 98504–1174, (360) 357–2121

Mr. James M. Albert, Acting Administrative Director, West Virginia Supreme Court of Appeals, E–100, State Capitol Bldg., 1900 Kanawha Blvd. East, Charleston, WV 25305–0833, (304) 558–0145

Mr. J. Denis Moran, Director of State Courts, 213 Northeast State Capitol, Madison, WI 53702, (608) 266–6828

Ms. Holly A. Hansen, State Court Administrator, Supreme Court of Wyoming, Supreme Court Building, 2301 Capital Avenue, Cheyenne, WY 82002, (307) 777–7480

## Appendix D—SJI Libraries: Designated Sites and Contacts

*Alabama*

Supreme Court Library

Mr. Timothy A. Lewis, State Law Librarian, Alabama Supreme Court Bldg., 300 Dexter Avenue, Montgomery, AL 36104, (334) 242–4347

*Alaska*

Anchorage Law Library

Ms. Cynthia S. Fellows, State Law Librarian, Alaska State Court Law Library, 820 W. Fourth Ave., Anchorage, AK 99501, (907) 264–0583

*Arizona*

State Law Library

Ms. Gladys Ann Wells, Collection Development, Research Division, Arizona Dept. of Library, Archives and Public Records, State Law Library, 1501 W. Washington, Phoenix, AZ 85007, (602) 542–4035, (602) 542–4035

*Arkansas*

Administrative Office of the Courts

Mr. James D. Gingerich, Director, Supreme Court of Arkansas, Justice Building, Little Rock, AR 72201–1078, (501) 682–9400

*California*

Administrative Office of the Courts

Mr. William C. Vickrey, State Court Administrator, Administrative Office of the Courts, 455 Golden Gate Avenue, Suite 5622, San Francisco, CA 94107, (415) 865–4200

*Colorado*

Supreme Court Library

Ms. Lois Calvert, Supreme Court Law Librarian, Colorado State Judicial Building, 2 East 14th Avenue, Denver, CO 80203, (303) 837–3720

*Connecticut*

State Library

Ms. Denise D. Jernigan, Head, Law/Legislative Reference Unit, Connecticut State Library, Hartford, CT 06106, (860) 566–2516

*Delaware*

Administrative Office of the Courts

Mr. Michael E. McLaughlin, Deputy Director, Administrative Office of the Courts, Carvel State Office Building, 820 North French Street, 11th Floor, P.O. Box 8911, Wilmington, DE 19801, (302) 577–8481

*District of Columbia*

Executive Office, District of Columbia Courts

Mr. Ulysses Hammond, Executive Officer, District of Columbia Courts, 500 Indiana Avenue, N.W., Washington, D.C. 20001, (202) 879–1700

*Florida*

Administrative Office of the Courts

Mr. Kenneth Palmer, State Court Administrator, Supreme Court Building, 500 South Duval Street, Tallahassee, FL 32399–1900, (850) 922–5081

*Georgia*

Administrative Office of the Courts

George Lange III, Director, Administrative Office of the Courts, 47 Trinity Avenue, Suite 414, Atlanta, GA 30334, (404) 656–5171

*Hawaii*

Supreme Court Library

Ms. Ann Koto, State Law Librarian, The Supreme Court Law Library, 417 South King St., Room 119, Honolulu, HI 96813, (808) 539–4965

*Idaho*

AOC Judicial Education Library/State Law Library

Ms. Beth Peterson, State Law Librarian, Idaho State Law Library, Supreme Court Building, 451 West State St., Boise, ID 83720, (208) 334–3316

*Illinois*

Supreme Court Library

Ms. Brenda Larison, Supreme Court of Illinois Library, 200 East Capitol Avenue, Springfield, IL 62701–1791, (217) 782–2425

*Indiana*

Supreme Court Library

Dennis Lager, Supreme Court Librarian, Supreme Court Library, State House, Room 316, Indianapolis, IN 46204, (317) 232–2557

*Iowa*

Administrative Office of the Court

Dr. Jerry K. Beatty, Executive Director, Judicial, Education & Planning, Administrative Office of the Courts, State Capital Building, Des Moines, IA 50319, (515) 281–8279

*Kansas*

Supreme Court Library

Mr. Fred Knecht, Law Librarian, Kansas Supreme Court Library, 301 West 10th Street, Topeka, KS 66612, (913) 296–3257

*Kentucky*

State Law Library

Ms. Sallie Howard, State Law Librarian, State Law Library, State Capital, Room 200, Frankfort, KY 40601, (502) 564–4848

*Louisiana*

State Law Library

Ms. Carol Billings, Director, Louisiana Law Library, 301 Loyola Avenue, New Orleans, LA 70112, (504) 568–5705

*Maine*

State Law and Legislative Reference Library

Ms. Lynn E. Randall, State Law Librarian, 43 State House Station, Augusta, ME 04333, (207) 287–1600

*Maryland*

State Law Library

Mr. Michael S. Miller, Director, Maryland State Law Library, Court of Appeal Building, 361 Rowe Boulevard, Annapolis, MD 21401, (410) 260–1430

*Massachusetts*

Middlesex Law Library

Ms. Sandra Lindheimer, Librarian, Middlesex Law Library, Superior Court House, 40 Thorndike Street, Cambridge, MA 02141, (617) 494–4148

*Michigan*

Michigan Judicial Institute,

Mr. Kevin Bowling, Director, Michigan Judicial Institute, 222 Washington Square North, P.O. Box 30205, Lansing, MI 48909, (517) 334–7804

*Minnesota*

State Law Library (Minnesota Judicial Center)

Mr. Marvin R. Anderson, State Law Librarian, Supreme Court of Minnesota, 25 Constitution Avenue, St. Paul, MN 55155, (612) 2972084

*Mississippi*

Mississippi Judicial College

Mr. Leslie Johnson, Director, University of Mississippi, P.O. Box 8850, University, MS 38677, (601) 232–5955

*Montana*

State Law Library

Ms. Judith Meadows, State Law Librarian, State Law Library of Montana, 215 North Sanders, Helena, MT 59620, (406) 444–3660

*Nebraska*

Administrative Office of the Courts

Mr. Joseph C. Steele, State Court Administrator, Administrative Office of the Courts/Probation, State Capitol Building, Room 1220, Lincoln, NE 68509, (402) 471–3730

*Nevada*

National Judicial College

Clara Kelly, Law Librarian, National Judicial College, Judicial College Building, University of Nevada, Reno, NV 89550, (702) 784–6747

*New Jersey*

New Jersey State Library

Marjorie Garwig, Supervising Law Librarian, New Jersey State Law Library, 185 West State Street, P.O. Box 520, Trenton, NJ 08625–0250, (609) 292–6230

*New Mexico*

Supreme Court Library

Mr. Thaddeus Bejnar, Librarian, Supreme Court Library, Post Office Drawer L, Santa Fe, NM 87504, (505) 827–4850

*New York*

Supreme Court Library

Ms. Colleen Stella, Principal Law Librarian, New York State Supreme Court Law Library, Onondaga County Court House, 401 Montgomery Street, Syracuse, NY 13202, (315) 435–2063

*North Carolina*

Supreme Court Library

Ms. Louise Stafford, Librarian, North Carolina Supreme Court Library, P.O. Box 28006, 2 East Morgan Street, Raleigh, NC 27601, (919) 733–3425

*North Dakota*

Supreme Court Library

Ms. Marcella Kramer, Assistant Law Librarian, Supreme Court Law Library, 600 East Boulevard Avenue, Dept. 182, 2nd Floor, Judicial Wing, Bismarck, ND 58505–0540, (701) 328–2229

*Northern Mariana Islands*

Supreme Court of the Northern Mariana Islands

Honorable Marty W.K. Taylor, Chief Justice, Supreme Court of the Northern Mariana Islands, P.O. Box 2165, Saipan, MP 96950, (670) 234–5275

*Ohio*

Supreme Court Library

Mr. Paul S. Fu, Law Librarian, Supreme Court Law Library, Supreme Court of Ohio, 30 East Broad Street, Columbus, OH 43266–0419, (614) 466–2044

*Oklahoma*

Administrative Office of the Courts

Mr. Howard W. Conyers, Administrative Director, 1915 North Stiles, Suite 305, Oklahoma City, OK 73105, (405) 521–2450

*Oregon*

Administrative Office of the Courts

Ms. Kingsley W. Click, State Court Administrator, Office of the State Court Administrator, Supreme Court Building, Salem, OR 97310, (503) 986–5900

*Pennsylvania*

State Library of Pennsylvania

Ms. Sharon Anderson, State Justice Depository, State Library of Pennsylvania, Collection Management, Room G–48 Forum Building, P.O. Box 1601, Harrisburg, PA 17105–1601, (717) 787–5718

*Puerto Rico*

Office of Court Administration

Alfredo Rivera-Mendoza, Esq., Director, Area of Planning and Management, Office of Court Administration, P.O. Box 917, Hato Rey, R 00919

*Rhode Island*

Roger Williams Law School Library

Mr. Kendall Svengalis, Law Librarian, Licht Judicial Complex, 250 Benefit Street, Providence, RI, (401) 254–4546

*South Carolina*

Coleman Karesh Law Library (University of South Carolina School of Law)

Mr. Bruce S. Johnson, Law Librarian, Associate Professor of Law, Coleman Karesh Law Library, U.S.C. Law Center, University of South Carolina, Columbia, SC 29208, (803) 777–5944

*Tennessee*

Tennessee State Law Library

Judge Connie Clark, Director, Administrative Office of the Courts, State of Tennessee, 511 Union, Nashville, TN 37243–0607, (615) 741–2687

*Texas*

State Law Library

Ms. Kay Schleuter, Director, State Law Library, P.O. Box 12367, Austin, TX 78711, (512) 463–1722

*U.S. Virgin Islands*

Library of the Territorial Court of the Virgin Islands (St. Thomas)

Librarian, The Library, Territorial Court of the Virgin Islands, Post Office Box 70, Charlotte Amalie, St. Thomas, U.S. Virgin Islands 00804

*Utah*

Utah State Judicial Administration Library

Ms. Debbie Christiansen, Utah State Judicial, Administration Library, AOC, 450 South State, P.O. Box 140241, Salt Lake City, UT 84114–0241, (801) 533–6371

*Vermont*

Supreme Court of Vermont

Mr. Lee Suskin, Court Administrator, Supreme Court of Vermont, 109 State Street, Montpelier, VT 05609–0701, (802) 828–3278

*Virginia*

Administrative Office of the Courts

Mr. Robert N. Baldwin, State Court Administrator, Supreme Court of Virginia, Administrative Offices, 100 North Ninth Street, 3rd Floor, Richmond, VA 23219, (804) 786–6455

*Washington*

Washington State Law Library

Ms. Deborah Norwood, State Law Librarian, Washington State Law Library, Temple of Justice, P.O. Box 40751, Olympia, WA 98504–0751, (206) 357–2136

*West Virginia*

Administrative Office of the Courts

Mr. Richard H. Rosswurm, Chief Deputy, West Virginia Supreme Court of Appeals, State Capitol, 1900 Kanawha, Charleston, WV 25305, (304) 348–0145

*Wisconsin*

State Law Library

Ms. Marcia Koslov, State Law Librarian, State Law Library, 310E State Capitol, P.O. Box 7881, Madison, WI 53707, (608) 266–1424

*Wyoming*

Wyoming State Law Library

Ms. Kathy Carlson, Law Librarian, Wyoming State Law Library, Supreme Court Building, 2301 Capitol Avenue, Cheyenne, WY 82002, (307) 777–7509

*National*

American Judicature Society

Ms. Clara Wells, Assistant for Information and Library Services, 25 East Washington Street, Suite 1600, Chicago, IL 60602, (312) 558–6900,

National Center for State Courts

Ms. Peggy Rogers, Acquisitions/Serials Librarian, 300 Newport Avenue, Williamsburg, VA 23187–8798, (804) 253–2000

JERITT

Maureen Conner, Project Director, Judicial Education Reference, Information and Technical Transfer Project (JERITT), Michigan State University, 560 Baker Hall, East Lansing, MI 48824, (517) 353–8603

## Appendix E—Illustrative List of Model Curricula

The following list includes examples of model SJI-supported curricula that State judicial educators may wish to adapt for presentation in education programs for judges and other court personnel with the assistance of a Curriculum Adaptation Grant. *Please refer to section VII.E. for information on submitting a letter application for a Curriculum Adaptation Grant.* A list of all SJI-supported education projects is available on the SJI website (http://www.statejustice.org). Please also check with the JERITT project (517/353–8603) and with your State SJI-designated library (see Appendix D) for information on other SJI-supported curricula that may be appropriate for in-State adaptation.

*Alternative Dispute Resolution*

Judicial Settlement Manual (National Judicial College: SJI–89–089)

Improving the Quality of Dispute Resolution (Ohio State University College of Law: SJI–93–277)

Comprehensive ADR Curriculum for Judges (American Bar Association: SJI–95–002)

Domestic Violence and Custody Mediation (American Bar Association: SJI–96–038)

*Court Coordination*

Bankruptcy Issues for State Trial Court Judges (American Bankruptcy Institute: SJI–91–027)

Intermediate Sanctions Handbook: Experiences and Tools for Policymakers (Center for Effective Public Policy: IAA–88–NIC–001)

Regional Conference Cookbook: A Practical Guide to Planning and Presenting a Regional Conference on State-Federal Judicial Relationships (U.S. Court of Appeals for the 9th Circuit: SJI–92–087)

Bankruptcy Issues and Domestic Relations Cases (American Bankruptcy Institute: SJI–96–175)

*Court Management*

Managing Trials Effectively: A Program for State Trial Judges (National Center for State Courts/National Judicial College: SJI–87–066/067, SJI–89–054/055, SJI–91–025/026)

Caseflow Management Principles and Practices (Institute for Court Management/National Center for State Courts: SJI–87–056)

A Manual for Workshops on Processing Felony Dispositions in Limited Jurisdiction Courts (National Center for State Courts: SJI–90–052)

Managerial Budgeting in the Courts; Performance Appraisal in the Courts; Managing Change in the Courts; Court Automation Design; Case Management for Trial Judges; Trial Court Performance Standards (Institute for Court Management/National Center for State Courts: SJI–91–043)

Strengthening Rural Courts of Limited Jurisdiction and Team Training for Judges and Clerks (Rural Justice Center: SJI–90–014, SJI–91–082)

Interbranch Relations Workshop (Ohio Judicial Conference: SJI–92–079)

Integrating Trial Management and Caseflow Management (Justice Management Institute: SJI–93–214)

Leading Organizational Change (California Administrative Office of the Courts: SJI–94–068)

Privacy Issues in Computerized Court Record Keeping: An Instructional Guide for Judges and Judicial Educators (National Judicial College: SJI–94–015)

Managing Mass Tort Cases (National Judicial College: SJI–94–141) Employment Responsibilities of State Court Judges (National Judicial College: SJI–95–025)

Dealing with the Common Law Courts: A Model Curriculum for Judges and Court Staff (Institute for Court Management/ National Center for State Courts: SJI–96–159)

Caseflow Management (Justice Management Institute: SJI–98–041)

*Courts and Communities*

A National Program for Reporting on the Courts and the Law (American Judicature Society: SJI–88–014)

Victim Rights and the Judiciary: A Training and Implementation Project (National Organization for Victim Assistance: SJI–89–083)

National Guardianship Monitoring Project: Trainer and Trainee's Manual (American Association of Retired Persons: SJI–91–013)

Access to Justice: The Impartial Jury and the Justice Systemand When Implementing the Court-Related Needs of Older People and Persons with Disabilities: An Instructional Guide (National Judicial College: SJI–91–054)

You Are the Court System: A Focus on Customer Service (Alaska Court System: SJI–94–048)

Serving the Public: A Curriculum for Court Employees (American Judicature Society: SJI–96–040)

Courts and Their Communities: Local Planning and the Renewal of Public Trust and Confidence: A California Statewide Conference (California Administrative Office of the Courts: SJI–98–008)

Public Trust and Confidence in the Courts (Mid-Atlantic Association for Court Management: SJI–98–208)

ACA National Conference: Public Trust and Confidence (Arizona Courts Association: SJI–99–063)

*Criminal Process*

Search Warrants: A Curriculum Guide for Magistrates (American Bar Association Criminal Justice Section: SJI–88–035)

*Diversity, Values, and Attitudes*

Troubled Families, Troubled Judges (Brandeis University: SJI–89–071)

The Crucial Nature of Attitudes and Values in Judicial Education (National Council of Juvenile and Family Court Judges: SJI–90–058)

Enhancing Diversity in the Court and Community (Institute for Court Management/National Center for State Courts: SJI–91–043)

Cultural Diversity Awareness in Nebraska Courts from Native American Alternatives to Incarceration Project (Nebraska Urban Indian Health Coalition: SJI–93–028)

Race Fairness and Cultural Awareness Faculty Development Workshop (National Judicial College: SJI–93–063)

A Videotape Training Program in Ethics and Professional Conduct for Nonjudicial Court Personnel and The Ethics Fieldbook: Tool For Trainers (American Judicature Society: SJI–93–068)

Court Interpreter Training Course for Spanish Interpreters (International Institute of Buffalo: SJI–93–075)

Doing Justice: Improving Equality Before the Law Through Literature-Based Seminars for Judges and Court Personnel (Brandeis University: SJI–94–019)

Indian Welfare Act''; ''Defendants, Victims, and Witnesses with Mental Retardation (National Judicial College: SJI–94–142)

Multi-Cultural Training for Judges and Court Personnel (St. Petersburg Junior College: SJI–95–006)

Ethical Standards for Judicial Settlement: Developing a Judicial Education Module (American Judicature Society: SJI–95–082)

Code of Ethics for the Court Employees of California (California Administrative Office of the Courts: SJI 95–245)

Workplace Sexual Harassment Awareness and Prevention (California Administrative Office of the Courts: SJI 96–089)

Just Us On Justice: A Dialogue on Diversity Issues Facing Virginia Courts (Virginia Supreme Court: SJI–96–150)

When Bias Compounds: Insuring Equal Treatment for Women of Color in the Courts (National Judicial Education Program: SJI 96–161)

When Judges Speak Up: Ethics, the Public, and the Media (American judicature Society: SJI–96–152)

*Family Violence and Gender-Related Violent Crime*

National Judicial Response to Domestic Violence: Civil and Criminal Curricula (Family Violence Prevention Fund: SJI–87–061, SJI–89–070, SJI–91–055).

Domestic Violence: A Curriculum for Rural Courts (Rural Justice Center: SJI–88–081)

Judicial Training Materials on Spousal Support; Judicial Training Materials on Child Custody and Visitation (Women Judges' Fund for Justice: SJI–89–062)

Judicial Response to Stranger and Nonstranger Rape and Sexual Assault (National Judicial Education Program: SJI–92–003)

Domestic Violence & Children: Resolving Custody and Visitation Disputes (Family Violence Prevention Fund: SJI–93–255)

Adjudicating Allegations of Child Sexual Abuse When Custody Is In Dispute (National Judicial Education Program: SJI 95–019)

Handling Cases of Elder Abuse: Interdisciplinary Curricula for Judges and Court Staff (American Bar Association: SJI–93–274)

*Health and Science*

Environmental Law Resource Handbook (University of New Mexico Institute for Public Law: SJI–92–162)

A Judge's Deskbook on the Basic Philosophies and Methods of Science: Model Curriculum (University of Nevada, Reno: SJI–97–030)

*Judicial Education For Appellate Court Judges*

Career Writing Program for Appellate Judges (American Academy of Judicial Education: SJI–88–086)

Civil and Criminal Procedural Innovations for Appellate Courts (National Center for State Courts: SJI–94–002)

*Judicial Education Faculty, and Program Development*

The Leadership Institute in Judicial Education and The Advanced Leadership Institute in Judicial Education (University of Memphis: SJI–91–021)

''Faculty Development Instructional Program'' from Curriculum Review (National Judicial College: SJI–91–039)

Resource Manual and Training for Judicial Education Mentors (National Association of State Judicial Educators: SJI–95–233)

Institute for Faculty Excellence in Judicial Education, (National Council of Juvenile and Family Court Judges: SJI–96–042)

*Orientation and Mentoring of Judges and Court Personnel*

Legal Institute for Special and Limited Jurisdiction Judges (National Judicial College: SJI–89–043, SJI–91–040)

Pre-Bench Training for New Judges (American Judicature Society: SJI–90–028)

A Unified Orientation and Mentoring Program for New Judges of All Arizona Trial Courts (Arizona Supreme Court: SJI–90–078)

Court Organization and Structure (Institute for Court Management/National Center for State Courts: SJI–91–043)

Judicial Review of Administrative Agency Decisions (National Judicial College: SJI–91–080)

New Employee Orientation Facilitators Guide (Minnesota Supreme Court: SJI–92–155)

Magistrates Correspondence Course (Alaska Court System: SJI–92–156)

Computer-Assisted Instruction for Court Employees (Utah Administrative Office of the Courts: SJI–94–012)

Bench Trial Skills and Demeanor: An Interactive Manual (National Judicial College: SJI 94–058)

Ethical Issues in the Election of Judges (National Judicial College: SJI–94–142)

*Juveniles and Families in Court*

Fundamental Skills Training Curriculum for Juvenile Probation Officers (National Council of Juvenile and Family Court Judges: SJI–90–017)

Child Support Across State Lines: The Uniform Interstate Family Support Act from Uniform Interstate Family Support Act: Development and Delivery of a Judicial Training Curriculum (ABA Center on Children and the Law: SJI 94–321)

*Strategic and Futures Planning*

Minding the Courts into the Twentieth Century (Michigan Judicial Institute: SJI–89–029)

An Approach to Long-Range Strategic Planning in the Courts (Center for Public Policy Studies: SJI–91–045)

*Substance Abuse*

Effective Treatment for Drug-Involved Offenders: A Review & Synthesis for Judges and Court Personnel (Education Development Center, Inc.: SJI–90–051)

Good Times, Bad Times: Drugs, Youth, and the Judiciary (Professional Development and Training Center, Inc.: SJI–91–095)

Gaining Momentum: A Model Curriculum for Drug Courts (Florida Office of the State Courts Administrator: SJI–94–291)

Judicial Response to Substance Abuse: Children, Adolescents, and Families (National Council of Juvenile and Family Court Judges: SJI–95–030)

## Appendix F—Illustrative List of Replicable Projects

The following list includes examples of SJI-supported projects that might successfully adapted and replicated in other in other jurisdictions. Please see section VI. for information on submitting a concept paper requesting a grant to replicate one of these or another SJI-supported project. A list of all SJI-supported projects is available on the Institute's website (http://www.statejustice.org).

*Application of Technology*

Automated Teller Machines for Juror Payment

Grantee: District of Columbia Courts
Contact: Philip Braxton, 500 Indiana Avenue, N.W., Washington, DC 20001, (202) 879–1700
Grant No: SJI–92–139

Analytical Judicial Desktop

Grantee: Fund for the City of New York
Contact: Michele Sviridoff, Mid-Town Community Court, 314 W. 54th Street, New York, New York 10019, (212) 484–2721
Grant No: SJI–94–323

*Children and Families in Court*

Parent Education and Custody Effectiveness (PEACE) Program

Grantee: Hofstra University
Contact: Andrew Shephard, 1000 Fulton Avenue, Hampstead, NY 11550–1090, (516) 463–5890
Grant No: SJI–93–265

A Judge's Guide to Culturally Competent Responses to Latino Family Violence

Grantee: Center for Public Policy Studies
Contacts: Stephen Weller, John Martin 999 18th Street, Suite 900, Denver, Colorado 80202
Grant No: SJI–96–230

*Court Management, Coordination and Planning*

Tribal Court-State Court Forums: A How To-Do-It Guide to Prevent and Resolve Jurisdictional Disputes and Improve Cooperation Between Tribal and State Courts:

Grantee: National Center for State Courts
Contact: Frederick Miller, 1331 17th Street, Suite 402, Denver, Colorado 80202–1554, (303) 293–3063
Grant No: SJI–91–011)

Measurement of Trial Court Performance

Grantee: Supreme Court of Virginia
Contact: Beatrice Monahan, 100 North Ninth Street, Third Floor, Richmond, VA 23219, (804) 786–6455
Grant No: SJI–91–042

Probate Caseflow Management Project

Grantee: Ohio Supreme Court/Trumball County Probate Court
Contact: Hon. Susan Lightbody, 160 High Street, N.W., Warren, OH 44481, (216) 675–2566
Grant No: SJI–92–081; SJI–92–081–P94–1; SJI–92–081–P95–1

Implementing Quality Methods in Court Operations

Grantee: Oregon Supreme Court
Contact: Scott Crampton, Supreme Court Building, Salem, OR 97310, (503) 378–5845
Grant No: SJI–92–170

Applying TQM Concepts to Systemwide Problems of the Maine Judicial Branch

Grantee: Maine Supreme Judicial Court
Contact: James T. Glessner, P.O. Box 4820, Portland, Maine 04101, (207) 822–0792
Grant No: SJI–93–072

Arizona-Sonora Judicial Relations Project

Grantee: Arizona Supreme Court
Contact: Dennis Metrick, 1501 W. Washington Street, Phoenix, Arizona 85007–3327, (602) 542–4532
Grant No: SJI–93–202

Implementing Strategic Planning in the Trial Courts

Grantee: Center for Public Policy Studies
Contact: David Price, 999 18th Street, Suite 900, Denver, CO 80202, (303) 863–0900
Grant No: SJI–94–021

Interstate Compacts and Cooperation in Guardianship Cases

Grantee: National College of Probate Judges
Contact: Paula Hannaford, P.O. Box 8978, Williamsburg, Virginia 23187–8798, (757) 253–2000
Grant No: SJI–97–241

*Courts and Communities*

AARP Volunteers: A Resource for Strengthening Guardianship Services

Grantee: American Association of Retired Persons
Contact: Wayne Moore, 601 E Street, N.W., Washington, DC 20049, (202) 434–2165
Grant Nos: SJI–88–033/SJI–91–013

Establishing a Consumer Research and Service Development Process Within the Judicial System

Grantee: Supreme Court of Virginia

Contact: Beatrice Monahan, Administrative Offices, Third Floor, 100 North Ninth Street, Richmond, VA 23219, (804) 786–6455
Grant No: SJI–89–068

Tele-Court: A Michigan Judicial System Public Information Program

Grantee: Michigan Supreme Court
Contact: Judy Bartell, State Court Administrative Office, 611 West Ottawa Street, P.O. Box 30048, Lansing, MI 48909, (517) 373–0130
Grant No: SJI–91–015

Arizona Pro Per Information System (QuickCourt)

Grantee: Arizona Supreme Court
Contact: Jeannie Lynch, Administrative Office of the Court, 1501 West Washington Street, Suite 411, Phoenix, AZ 85007–3330, (602) 542–9554
Grant No: SJI–91–084

Using Judges and Court Personnel to Facilitate Access to Courts by Limited English Speakers

Grantee: Washington Office of the Administrator for the Courts
Contact: Joanne Moore, 1206 South Quince Street, P.O. Box 41170, Olympia, WA 98504–1170, (206) 753–3365
Grant No: SJI–92–147

Pro se Forms and Instructions Packets

Grantee: Michigan Supreme Court
Contact: Pamela Creighton, 611 W. Ottawa Street, Lansing, MI 48909
Grant No: SJI–94–003

Understanding the Judicial Process: A Curriculum and Community Service Program

Grantee: Drake University
Contact: Timothy Buzzell, Opperman Hall, Des Moines, IA 50311, (515) 271–3205
Grant No: SJI–94–022

Court Self-Service Center

Grantee: Maricopa County Superior Court
Contact: Bob James, 201 W. Jefferson, 4th Floor, Phoenix, AZ 85003, (602) 506–6314
Grant No: SJI–94–324

Computer-Based Interpreter Test Delivery System

Grantee: Maryland Administrative Office of the Courts
Contact: Elizabeth Veronis, 361 Rowe Boulevard, Annapolis, Maryland 21401, (410) 974–2141
Grant No: SJI–96–164

Public Opinion and the Courts

Grantee: New Mexico Administrative Office of the Courts
Contact: John M. Greacen, 237 Don Gaspar, Room 25, Santa Fe, New Mexico 87501–2178, (505) 827–4800
Grant No: SJI–97–026

*Sentencing*

Facilitating the Appropriate Use of Intermediate Sanctions

Grantee: Center for Effective Public Policy
Contact: Peggy McGarry, 8403 Colesville Road, Suite 720, (301) 589–9383
Grant No: SJI–95–078

*Substance Abuse*

Alabama Alcohol and Drug Abuse Court Referral Officer Program

Grantee: Alabama Administrative Office of the Courts
Contact: Angelo Trimble, 817 South Court Street, Montgomery, AL 36130–0101, (334) 834–7990
Grant Nos: SJI–88–030/SJI–89–080/SJI–90–005

Substance Abuse Assessment and Intervention to Reduce Driving Under the Influence of Alcohol Recidivism

Grantee: California Administrative Office of the Courts c/o El Cajon Municipal Court
Contact: Fred Lear, 250 E. Main Street, El Cajon, CA 92020, (619) 441–4336
Grant No: SJI–88–029/SJI–90–008

Court Referral Officer Program

Grantee: New Hampshire Supreme Court
Contact: Jim Kelley, Supreme Court Building, Concord, NH 03301, (603) 271–2521
Grant No: SJI–92–142

**Appendix G—State Justice Institute Scholarship Application**

This application does not serve as a registration for the course. Please contact the education provider.

Applicant Information:
1. Applicant Name: _____
(Last First M)
2. Position: _____
3. Name of Court: _____
4. Address: _____
(Street/P.O. Box)
_____
(City state zip code)
5. Telephone No. _____
6. Congressional District: _____

Program Information:
7. Course Name: _____
8. Course Dates: _____
9. Course Provider: _____
10. Location Offered: _____

Estimated Expenses: (Please note, scholarships are limited to tuition and transportation expenses to and from the site of the course up to a maximum of $1,500.)
Tuition: $ _____
Transportation: $ _____
(Airfare, train fare, or if you plan to drive)
Amount Requested: $ _____

Are you seeking/have you received a scholarship for this course from another source? ____ Yes ____ No.
If so, please specify the source(s) and amounts(s) _____

Additional Information: Please attach a current resume or professional summary, and provide the information requested below. (You may attach additional pages if necessary.)

1. Please describe your need to acquire the skills and knowledge taught in this course.
2. Please describe how will taking this course benefit you, your court, and the State's courts generally.
3. Is there an educational program currently available through your State on this topic?
4. Are State or local funds available to support your attendance at the proposed course? If so, what amount(s) will be provided?
5. How long have you served as a judge or court manager?
_____
6. How long do you anticipate serving as a judge or court manager, assuming reelection or reappointment?
0–1 year 2–4 years 5–7 years 8–10 years 11+ years
7. What continuing professional education programs have you attended in the past year?
Please indicate which were mandatory (M) and which were non-mandatory (V).

Statement of Applicant's Commitment

If a scholarship is awarded, I will share the skills and knowledge I have gained with my court colleagues locally, and if possible, Statewide, and I will submit an evaluation of the educational program to the State Justice Institute and to the Chief Justice of my State.

_____
Signature/Date

Please return this form and Form S–2 to: Scholarship Coordinator, State Justice Institute, 1650 King Street, Suite 600, Alexandria Virginia 22314 (Form S2)

State Justice Institute Scholarship Application Concurrence

I, _____
Name of chief justice (or chief justice's designee)
have reviewed the application for a scholarship to attend the program entitled
_____
prepared by _____
Name of applicant
and concur in its submission to the State Justice Institute. The applicant's participation in the program would benefit the State; the applicant's absence to attend the program would not present an undue hardship to the court; public funds are not available to enable the applicant to attend this course; and receipt of a scholarship would not diminish the amount of funds made available by the State for judicial branch education.

_____
Signature

_____
Name

_____
Title

_____
Date

## Appendix H—Line-Item Budget Form

For Concept Papers, Curriculum Adaptation & Technical Assistance Grant Requests

| Category match | SJI funds | Cash match | In-kind |
|---|---|---|---|
| Personnel .. | $_____ | $_____ | $_____ |
| Fringe Benefits ..... | $_____ | $_____ | $_____ |
| Consultant/ Contractual ..... | $_____ | $_____ | $_____ |

| Category match | SJI funds | Cash match | In-kind |
|---|---|---|---|
| Travel ..... | $_____ | $_____ | $_____ |
| Equipment | $_____ | $_____ | $_____ |
| Supplies .... | $_____ | $_____ | $_____ |
| Telephone | $_____ | $_____ | $_____ |
| Postage ..... | $_____ | $_____ | $_____ |
| Printing/ Photocopying ..... | $_____ | $_____ | $_____ |
| Audit ..... | $_____ | $_____ | $_____ |
| Other ..... | $_____ | $_____ | $_____ |
| Indirect Costs (%) | $_____ | $_____ | $_____ |
| Total ..... | $_____ | $_____ | $_____ |

Project Total: $_____

Financial assistance has been or will be sought for this project from the following other sources:

_____

Concept papers requesting an acccelerated award, Curriculum Adaptation grant requests, and Technical Assistance grant requests should be accompanied by a budget narrative explaining the basis for each line-item listed in the proposed budget.

**Appendix I— State Justice Institute Certificate of State Approval**

The _____
Name of State Supreme Court or designated agency or council

has reviewed the application entitled _____ prepared by _____
Name of applicant

approves its submission to the State Justice Institute, and

[ ] agrees to receive and administer and be accountable for all funds awarded by the Institute pursuant to the application.

[ ] designates
Name of trial or appellate court or agency

as the entity to receive, administer, and be accountable for all funds awarded by the Institute pursuant to the application.

_____
Signature

_____
Date

_____
Name

_____
Title

[FR Doc. 99–22418 Filed 8–30–99; 8:45 am]

BILLING CODE 6820–SC–P

# Reader Aids

**Federal Register**

Vol. 64, No. 168

Tuesday, August 31, 1999

## CUSTOMER SERVICE AND INFORMATION

**Federal Register/Code of Federal Regulations**

| | |
|---|---|
| General Information, indexes and other finding aids | **202–523–5227** |
| **Laws** | **523–5227** |
| **Presidential Documents** | |
| Executive orders and proclamations | **523–5227** |
| **The United States Government Manual** | **523–5227** |
| **Other Services** | |
| Electronic and on-line services (voice) | **523–4534** |
| Privacy Act Compilation | **523–3187** |
| Public Laws Update Service (numbers, dates, etc.) | **523–6641** |
| TTY for the deaf-and-hard-of-hearing | **523–5229** |

## ELECTRONIC RESEARCH

### World Wide Web

Full text of the daily Federal Register, CFR and other publications:

**http://www.access.gpo.gov/nara**

Federal Register information and research tools, including Public Inspection List, indexes, and links to GPO Access:

**http://www.nara.gov/fedreg**

### E-mail

**PENS** (Public Law Electronic Notification Service) is an E-mail service for notification of recently enacted Public Laws. To subscribe, send E-mail to

**listserv@www.gsa.gov**

with the text message:

subscribe PUBLAWS-L your name

Use listserv@www.gsa.gov only to subscribe or unsubscribe to PENS. We cannot respond to specific inquiries.

**Reference questions.** Send questions and comments about the Federal Register system to:

**info@fedreg.nara.gov**

The Federal Register staff cannot interpret specific documents or regulations.

## FEDERAL REGISTER PAGES AND DATES, AUGUST

41765–41998 ..... 2
41999–42264 ..... 3
42265–42578 ..... 4
42579–42822 ..... 5
42823–43042 ..... 6
43043–43254 ..... 9
43255–43598 ..... 10
43599–43896 ..... 11
43897–44100 ..... 12
44101–44396 ..... 13
44397–44642 ..... 16
44643–44816 ..... 17
44817–45148 ..... 18
45149–45406 ..... 19
45407–45858 ..... 20
45859–46110 ..... 23
46111–46256 ..... 24
46257–46558 ..... 25
46559–46812 ..... 26
46813–47090 ..... 27
47091–47336 ..... 30
47337–47648 ..... 31

## CFR PARTS AFFECTED DURING AUGUST

At the end of each month, the Office of the Federal Register publishes separately a List of CFR Sections Affected (LSA), which lists parts and sections affected by documents published since the revision date of each title.

**3 CFR**

**Proclamations:**
7103 (See Proc. 7214) ..... 42265
7202 (See Proc. 7214) ..... 42265
7208 (See Proc. 7214) ..... 42265
7214 ..... 42265
7215 ..... 46813
7216 ..... 47091
7217 ..... 47093
7218 ..... 47337

**Executive Orders:**
12216 (Amended by EO 13135) ..... 47339
12372 (Supplemented by EO 13132) ..... 43255
12612 (Revoked by EO 13132) ..... 43255
12866 (Supplemented by EO 13132) ..... 43255
12875 (Revoked by EO 13132) ..... 43255
12924 (See Notice of Aug. 10, 1999) ..... 44101
12988 (Supplemented by EO 13132) ..... 43255
13083 (Revoked by EO 13132) ..... 43255
13095 (Revoked by EO 13132) ..... 43255
13132 ..... 43255
13133 ..... 43895
13134 ..... 44639
13135 ..... 47339

**Administrative Orders:**
Notice of Aug. 10, 1999 ..... 44101
No. 98–39 of September 30, 1998 (See Presidential Determination No. 99–33 of August 12, 1999) ..... 47341
No. 99–33 of August 12, 1999) ..... 47341
No. 99–34 of August 13, 1999) ..... 47343
No. 99–35 of August 17, 1999) ..... 47347

**5 CFR**

630 ..... 46257
2626 ..... 47095
2634 ..... 47095

**7 CFR**

11 ..... 43043
57 ..... 47349
75 ..... 47349
301 ..... 45859
319 ..... 45860
610 ..... 41999
761 ..... 47097
906 ..... 45407, 47349
966 ..... 45409
989 ..... 43897
1220 ..... 45413
1230 ..... 44643
1439 ..... 47358
1728 ..... 42005

**Proposed Rules:**
6 ..... 42288
210 ..... 46319
220 ..... 46319
225 ..... 46319
226 ..... 46319
318 ..... 47141
354 ..... 43103
457 ..... 46599
505 ..... 44634
905 ..... 46603
915 ..... 45461
931 ..... 42858
932 ..... 42619
944 ..... 45461
981 ..... 43298
984 ..... 45208
1106 ..... 42860
1217 ..... 46754, 46765
3419 ..... 42576

**8 CFR**

217 ..... 42006
270 ..... 47099
274 ..... 47099
280 ..... 47099

**9 CFR**

101 ..... 43043
102 ..... 43043
105 ..... 43043
112 ..... 43043
113 ..... 43043, 45419
116 ..... 43043
124 ..... 43043
318 ..... 44644
319 ..... 44644
390 ..... 43902

**Proposed Rules:**
145 ..... 43301
147 ..... 43301

**10 CFR**

31 ..... 42269
50 ..... 42823
76 ..... 44645
420 ..... 46111

**Proposed Rules:**
30 ..... 45900
35 ..... 45907
40 ..... 45900
50 ..... 44137, 44860, 45900, 45908, 45911

70 .....45900, 45911, 46319
72 .....45918, 45920, 45923
709.....45062
710.....44433, 45062
711.....45062

**11 CFR**

110.....42579
9004.....42579
9034.....42579
9036.....42584
**Proposed Rules:**
114.....46319

**12 CFR**

201.....41765
220.....46559
602.....41770, 45589
541.....46560
545.....46560
560.....46560
561.....46560
612.....43046
614.....43046, 43049
616.....43049
618.....43046, 43049
621.....43049
905.....44103
**Proposed Rules:**
202.....44582
361.....42861, 42862
702.....44663
747.....44663
935.....44444

**13 CFR**

120.....44109
**Proposed Rules:**
120.....43636

**14 CFR**

4.....43599
14.....47361
17.....47361
25.....44817
27 .....43016, 45092, 46230, 47563
29 .....43016, 45336, 46230, 47563
39 .....41775, 41776, 41778, 42007, 42275, 42824, 43050, 43051, 43053, 43056, 43058, 43060, 43061, 43905, 44110, 44112, 44650, 45868, 45870, 46259, 47362, 47365, 47368, 47370, 47371, 47372, 47374, 47376, 47377, 47382, 47384
71 .....41780, 42276, 42432, 42585, 42591, 42592, 43063, 43065, 43066, 43068, 43069, 43261, 43599, 43907, 44114, 44116, 44117, 44268, 44397, 44398, 44399, 44400, 44578, 44819, 44821, 44823, 44825, 45149, 45421, 45423, 45425, 45426, 45433, 45435, 45436, 46114, 46115, 46116, 46228, 46262, 46264, 46265, 46366, 46267, 46815, 46816, 46817, 47385, 47386, 47563
91.....44814, 47563
97 .....44117, 44119, 47388
121.....46117
125.....46117
254.....41781
257.....46818
258.....46818
382.....41781
399.....46818
**Proposed Rules:**
25 .....43570, 43943, 43946, 45589
39 .....41841, 41842, 42289, 42291, 42293, 42295, 42296, 42297, 42619, 42622, 42866, 42868, 42870O, 43314, 43316, 43318, 43638, 43948, 43950, 43953, 43955, 43957, 43959, 43961, 43963, 43966, 44137, 44446, 44663, 44666, 44667, 45211, 45466, 45468, 45470, 45472, 45474, 45476, 45477, 45481, 45483, 45485, 45487, 45925, 45827, 45929, 46609, 47142, 47144, 47146, 47148, 47149, 47438, 47440, 47442, 47447
65.....42810
66.....42810
71 .....42300, 42301, 44139, 44140, 44141, 44142, 44144, 44865, 46868, 46869, 46870, 46871, 47449, 47451
93.....44145, 46155
107.....43321
108.....43322
119.....45090
121.....45090
129.....45090
135.....45090
147.....42810
183.....45090
382.....46611

**15 CFR**

734.....42009, 47104
736.....47104
738.....42009
740.....42009
742.....42009, 47104
743.....47104
748.....47104
750.....47104
774.....47104
902.....42826
**Proposed Rules:**
303.....46872

**16 CFR**

2.....43599, 46267
3.....46267
4.....46267
5.....42594
**Proposed Rules:**
1212.....42302

**17 CFR**

9.....43254, 46270
10.....43071
12.....43071
171.....46270
200.....42594
211.....45150
239.....46821
240.....42031, 42594
249.....42594
270.....46821
274.....46821
275.....46821
**Proposed Rules:**
1.....47151
3.....47352
4.....41843
30.....46613, 46618
32.....47452
275.....43556

**18 CFR**

3.....44400
341.....44400
342.....44400
346.....44400
357.....44400
362.....44400
381.....44652, 47107
385.....44400
**Proposed Rules:**
101.....42304
343.....43600
357.....42623, 45931
385.....42307, 43600

**19 CFR**

4.....43262
10.....43262
12.....43262
24.....42031, 43262
102.....43262
112.....43262
113.....43262
118.....43262
122.....43262
133.....43262
141.....43262
143.....43262
144.....43262
148.....43262
151.....43608
162.....43262
173.....43262
174.....43262, 43608
178.....43608
181.....43262
**Proposed Rules:**
12.....41851
113.....41851, 42872
141.....41851

**20 CFR**

404.....46122
**Proposed Rules:**
375.....44670
404.....42310
416.....42310

**21 CFR**

101.....42277
172 .....43072, 43908, 44121
173.....44122
175.....45872
176.....46129, 46130
177.....46271, 47107
178 .....44406, 44407, 45873, 46132, 47109
310.....44653
510.....42596
520.....42596
522 .....42596, 42830, 46839
524.....42831
558.....42596, 43909
573.....46840, 46841
606.....45366
640.....45366
878.....45155, 46011
1308.....42432
1312.....42432
**Proposed Rules:**
101 .....42315, 45932, 46626
115.....46626
207.....43114
310.....44671
314.....42625, 42873
344.....44671
600.....45383
606.....45355, 45375
607.....43114, 45340
610.....45340
630.....45355
640.....45340, 45375
660.....45340
807.....43114
870.....43114
888.....43114
890.....43114

**22 CFR**

41.....42032, 45162
514.....44123

**23 CFR**

1225.....47110

**24 CFR**

103.....46843
108.....44094
982.....43613
**Proposed Rules:**
990.....43641

**26 CFR**

1 .....41783, 43072, 43267, 43613, 43910, 45874
31.....42831
301.....41783
602 .....41783, 43072, 43613
801.....42834
**Proposed Rules:**
1 .....43117, 43323, 43462, 43969, 46155, 46320, 46876, 46878
301.....43324
602.....43462

**27 CFR**

24.....46844
252.....46844

**28 CFR**

0.....46845
20.....47099
22.....47099
36.....47099
71.....47099
76.....47099
85.....47099
505.....43880

**29 CFR**

18.....47088
1610.....45164
1917.....46846
1918.....46846
2570.....42246
2575.....42246
4044.....44128
**Proposed Rules:**
1910.....45098
1926.....47461
2520.....42792, 42797
2560.....42792, 42797
2570.....42797

**30 CFR**

26.....43280

29 ....43280
57 ....43280
70 ....43283
71 ....43283
75 ....43280, 43286, 45165
90 ....43283
202 ....43506
206 ....43288, 43506
250 ....42597
914 ....43911
943 ....43913
**Proposed Rules:**
206 ....45213
913 ....44674
914 ....44448
935 ....42887
936 ....43327
946 ....45489

**31 CFR**

103 ....45438
538 ....41784
550 ....41784
560 ....41784
590 ....43924
**Proposed Rules**
1 ....46627
375 ....42626

**32 CFR**

199 ....45453, 46133
505 ....45877
**Proposed Rules:**
230 ....43856
231 ....43858
231a ....43856

**33 CFR**

100 ....42278, 42598, 43289, 46272, 46273
110 ....42279
117 ....42033, 42599, 44129, 44131, 44826, 46274, 46275, 47389
160 ....41794
165 ....43290, 43291, 44658, 45878, 45879, 46276, 46566, 46848
**Proposed Rules:**
100 ....41853, 47461
110 ....47156
117 ....44145, 44147, 44148, 44149, 44151, 46322, 46323
167 ....46627
207 ....47462

**34 CFR**

611 ....42837
685 ....46252
**Proposed Rules:**
Ch. VI ....46628
668 ....42206, 43024, 43582
673 ....42206
674 ....42206
675 ....42206
676 ....42206
682 ....42176, 43024, 43428
685 ....43428
690 ....42206

**36 CFR**

**Proposed Rules:**
13 ....41854
51 ....47336
1191 ....42056

**37 CFR**

**Proposed Rules:**
201 ....42316

**38 CFR**

2 ....47111
14 ....47111
17 ....44659
21 ....44660, 46974

**39 CFR**

20 ....43292, 46141, 46277
**Proposed Rules:**
111 ....44681
265 ....46630

**40 CFR**

9 ....42432, 43426, 43936
52 ....42600, 43083, 44131, 44134, 44408, 44411, 44415, 44417, 45170, 45175, 45178, 45182, 45454, 46279, 46949, 47113, 47390, 47392, 47395
58 ....42530
60 ....47395
62 ....43091, 44420, 45184, 45880, 46148
63 ....42764, 45187
81 ....46279, 47113
86 ....43936
122 ....42432, 43426
123 ....42432, 43426
124 ....42432, 43426
180 ....41804, 41810, 41812, 41815, 41818, 42280, 42839, 42846, 44826, 44829, 45885, 45888, 46290, 46292
186 ....41818
261 ....42033
271 ....41823, 42602, 44836, 46298, 46302
272 ....46567
300 ....44135, 47401
403 ....42552
501 ....42432, 43426
503 ....42552
745 ....42849
**Proposed Rules:**
35 ....46234
51 ....45491
52 ....42629, 42888, 42891, 42892, 44152, 44450, 44451, 44452, 45215, 45216, 45217, 46325, 46331, 46878, 47464, 47465
55 ....45217
60 ....47234, 47276, 47465
62 ....43123, 45222, 45937, 46165
63 ....45116, 45221
81 ....46331
97 ....43124, 44452
122 ....46058
123 ....46058
124 ....46058
130 ....46012
131 ....46058
147 ....43329
148 ....46476
197 ....46976
259 ....45632
261 ....42317, 44866, 45632, 46166, 46476
264 ....46476
265 ....46476
266 ....45632
268 ....46476
270 ....45632
271 ....42630, 43331, 44876, 46332, 46476
272 ....46632
281 ....43336, 46178
300 ....41875, 42328, 42630, 43129, 43641, 43970, 44452, 44454, 44456, 44458, 45222, 45224, 46333, 46632, 47465, 47478, 47481
302 ....46476
372 ....42222
441 ....45072
710 ....46772

**41 CFR**

301 ....43254
303–70 ....45890
**Proposed Rules:**
51-2 ....41882
51-5 ....41882

**42 CFR**

413 ....42610, 44841
498 ....43295
1001 ....42174
**Proposed Rules:**
Ch. IV ....43338
84 ....46178

**43 CFR**

4 ....46151
3730 ....47018
3820 ....47018
3830 ....47018
3850 ....47018
**Proposed Rules:**
3730 ....47023
3810 ....47023
3820 ....47023
3830 ....47023
3840 ....47023
3850 ....47023

**44 CFR**

206 ....47402
61 ....41825
64 ....42852, 44421
206 ....41827
**Proposed Rules:**
61 ....42632
62 ....42633
206 ....46852

**45 CFR**

144 ....45786
146 ....45786
148 ....45786
150 ....45786
801 ....42039

**46 CFR**

10 ....42812, 44786
12 ....42812, 44786
69 ....47402
**Proposed Rules:**
298 ....44152
535 ....42057

**47 CFR**

0 ....43618
1 ....42854, 45891
5 ....43094
43 ....43618
52 ....46571
61 ....46584
62 ....43937
63 ....43095, 43618, 46584
64 ....43618, 44423, 47118
69 ....45196, 46584
73 ....41827, 41828, 41829, 41830, 41831, 41832, 41833, 41834, 42614, 42615, 42616, 43095, 44856, 45893, 46316, 47404, 47405, 47406, 47407, 47408
76 ....42617, 42855
90 ....43094
101 ....45891
**Proposed Rules:**
Ch. 1 ....41883, 42635
1 ....41884, 41887
2 ....41891, 43643
15 ....41897
20 ....44682
32 ....44877
43 ....44877
51 ....41897
64 ....44877
68 ....41897
73 ....41899, 43132, 45500, 47157, 47483, 47484
76 ....41887
78 ....41899
95 ....41891

**48 CFR**

202 ....43096
204 ....43098, 45196, 45197, 46474
212 ....43098
213 ....43098
217 ....43096
219 ....45197
252 ....43098, 45196
253 ....43098, 45197
413 ....45894
453 ....45894
601 ....43618
602 ....43618
603 ....43618
604 ....43618
605 ....43618
606 ....43618
608 ....43618
609 ....43618
610 ....43618
611 ....43618
613 ....43618
614 ....43618
615 ....43618
616 ....43618
617 ....43618
619 ....43618
622 ....43618
623 ....43618
625 ....43618
626 ....43618
628 ....43618
629 ....43618
630 ....43618
631 ....43618
632 ....43618
633 ....43618
634 ....43618
636 ....43618
637 ....43618
639 ....43618
641 ....43618

642....43618
643....43618
644....43618
645....43618
646....43618
647....43618
649....43618
652....43618
653....43618
701....42040
702....42040
703....42040
705....42040
706....42040
709....42040
714....42040
716....42040
719....42040
726....42040
732....42040
733....42040
734....42040
749....42040
750....42040
752....42040
1503....47409
1515....47409
1552....47409
2401....46092
2402....46092
2403....46092
2409....46092
2413....46092
2414....46092
2415....46092
2416....46092
2419....46092
2424....46092
2425....46092
2426....46092
2428....46092
2432....46092
2433....46092
2436....46092
2437....46092
2439....46092
2442....46092
2446....46092
2451....46092
2452....46092
2453....46092
5416....41834

**Proposed Rules:**

17....44100
536....44683
2403....46104
2409....46104
2436....46104
2439....46104
2442....46104
2452....46104
2453....46104
9903....45700

**49 CFR**

1....46594
171....45388, 45457
172....44426, 44578, 45388
173....44426
175....45388
192....46853
195....46853
396....45207
571....45895, 47119, 47566
575....47119
1121....46594

**Proposed Rules:**

27....46611
190....43972
192....47157
195....47157
385....44460
390....44460
571....42330
575....44164

**50 CFR**

17....41835, 46542, 47126
20....45400, 47072, 47134, 47418
300....44428
600....42286
622....43941, 45457, 46596
635....42855, 43101
648....42042, 42045, 44661, 46596
660....42286, 42856
679....41839, 42826, 43295, 43296, 43297, 43634, 43941, 43942, 44431, 44432, 44858, 44859, 45459, 45460, 46153, 46317

**Proposed Rules:**

17....41903, 42058, 42250, 43132, 44171, 44470, 44883
20....44384, 47048
32....43834
36....43834
226....44683
600....42335, 43137, 45501
622....41905, 42068, 44884, 46634
635....44885
648....42071, 43137, 43138, 45938
649....45501
660....44475
679....42080

## REMINDERS

The items in this list were editorially compiled as an aid to Federal Register users. Inclusion or exclusion from this list has no legal significance.

## RULES GOING INTO EFFECT AUGUST 31, 1999

**ENVIRONMENTAL PROTECTION AGENCY**

Air programs:
- Ambient air quality standards, national—
  - Regional haze standards for Class I Federal areas (large national parks and wilderness areas); visibility protection program; published 7-1-99

Superfund program:
- National oil and hazardous substances contingency plan—
  - National priorities list update; published 8-31-99

**FEDERAL COMMUNICATIONS COMMISSION**

Television broadcasting:
- Telecommunications Act of 1996; implementation—
  - Cable Act reform provisions; published 7-2-99
  - Cable Act reform provisions; published 8-6-99
  - Cable Act reform provisions; correction; published 8-6-99

**TRANSPORTATION DEPARTMENT**

**Federal Aviation Administration**

Airworthiness directives:
- New Piper Aircraft, Inc.; published 7-13-99
- Stemme GmbH & Co. KG; published 7-14-99

Procedural rules:
- Protests and contract disputes procedures; and Equal Access to Justice Act implementation
  - Correction; published 8-31-99

## COMMENTS DUE NEXT WEEK

**AGRICULTURE DEPARTMENT**

**Agricultural Marketing Service**

Almonds grown in—
- California; comments due by 9-9-99; published 8-10-99

Bartlett pears (fresh) grown in—
- Oregon and Washington; comments due by 9-7-99; published 8-6-99

Oranges, grapefruit, tangerines, and tangelos grown in—
- Florida; comments due by 9-10-99; published 8-26-99

**AGRICULTURE DEPARTMENT**

**Animal and Plant Health Inspection Service**

Interstate transportation of animals and animals products (quarantine):
- Brucellosis in cattle and bison—
  - State and area classifications; comments due by 9-7-99; published 7-8-99

Plant-related quarantine, foreign:
- Unmanufactured solid wood packing material; importation; comments due by 9-7-99; published 7-7-99

**AGRICULTURE DEPARTMENT**

**Commodity Credit Corporation**

Loan and purchase programs:
- Dairy recourse loan program for commercial dairy processors; comments due by 9-7-99; published 7-22-99

**AGRICULTURE DEPARTMENT**

**Food and Nutrition Service**

Food distribution programs:
- Personal Responsibility and Work Opportunity Reconciliation Act of 1996; implementation; comments due by 9-7-99; published 7-8-99

Food stamp program:
- Personal Responsibility and Work Opportunity Reconciliation Act of 1996; implementation—
  - Non-discretionary provisions; comments due by 9-10-99; published 7-12-99

**AGRICULTURE DEPARTMENT**

**Rural Utilities Service**

Electric loans:
- Load forecasts; borrower requirements; comments due by 9-7-99; published 7-7-99

**COMMERCE DEPARTMENT**

**Economic Analysis Bureau**

International services surveys:
- BE-80; benchmark survey of financial services transactions between U.S. financial services providers and unaffiliated foreign persons; comments due by 9-7-99; published 7-9-99

**COMMERCE DEPARTMENT**

**National Oceanic and Atmospheric Administration**

Endangered and threatened species:
- Critical habitat designations—
  - Snake River spring/summer chinook salmon; comments due by 9-8-99; published 8-17-99

Fishery conservation and management:
- Alaska; fisheries of Exclusive Economic Zone—
  - License limitation program; comments due by 9-7-99; published 8-6-99
- Caribbean, Gulf, and South Atlantic fisheries—
  - Gulf of Mexico and South Atlantic coastal migratory pelagic resources; comments due by 9-7-99; published 7-6-99
- Magnuson-Stevens Act provisions—
  - American lobster; exempted fishing permits; comments due by 9-7-99; published 8-20-99
- Northeastern United States fisheries—
  - Mid-Atlantic Fishery Management Council; hearings; comments due by 9-7-99; published 8-9-99

**DEFENSE DEPARTMENT**

Acquisition regulations:
- General property, plant, and equipment; contractor reporting requirements; comments due by 9-7-99; published 7-22-99

Federal Acquisition Regulation (FAR):
- Ocean transportation by U.S.-flag vessels; comments due by 9-10-99; published 7-12-99

**DEFENSE DEPARTMENT**

**Navy Department**

Attorneys practicing under cognizance and supervision of Judge Advocate General; professional conduct; comments due by 9-10-99; published 7-12-99

National Environmental Policy Act; implementation; comments due by 9-7-99; published 7-9-99

**ENVIRONMENTAL PROTECTION AGENCY**

Air programs:
- Pesticide products; State registration—
  - Hospital/medical/infectious waste incinerators constructed on or before June 20, 1996; Federal plan requirements; comments due by 9-7-99; published 7-6-99

Air programs; approval and promulgation; State plans for designated facilities and pollutants:
- New York; comments due by 9-8-99; published 8-9-99

Air quality implementation plans; approval and promulgation; various States:
- California; comments due by 9-7-99; published 8-6-99
- District of Columbia; comments due by 9-7-99; published 8-5-99
- Minnesota; comments due by 9-7-99; published 8-6-99

Clean Air Act:
- Interstate ozone transport reduction—
  - Nitrogen oxides budget trading program; Sections 126 and 110 rulemakings; unit-specific information for affected sources; comments due by 9-8-99; published 8-9-99

Grants and other Federal assistance:
- State and local assistance—
  - Indian Tribes; environmental program grants; comments due by 9-7-99; published 7-23-99
  - State, interstate, and local government agencies; environmental program grants; comments due by 9-7-99; published 7-23-99

Hazardous waste program authorizations:
- South Dakota; comments due by 9-9-99; published 8-10-99
- Wisconsin; comments due by 9-7-99; published 8-5-99

Hazardous waste:
State underground storage tank program approvals—
North Carolina; comments due by 9-9-99; published 8-10-99
North Carolina; correction; comments due by 9-9-99; published 8-24-99
Pesticides; tolerances in food, animal feeds, and raw agricultural commodities:
Fosetyl-Al; comments due by 9-7-99; published 7-8-99
N-acyl sarcosines and sodium N-acyl sarcosinates; comments due by 9-7-99; published 7-7-99
Processing fees; comments due by 9-7-99; published 6-9-99
Superfund program:
National oil and hazardous substances contingency plan—
National priorities list update; comments due by 9-7-99; published 8-5-99
National priorities list update; comments due by 9-8-99; published 8-9-99
National priorities list update; comments due by 9-10-99; published 8-11-99

**FARM CREDIT ADMINISTRATION**
Farm credit system:
Miscellaneous amendments; comments due by 9-8-99; published 8-9-99

**FEDERAL COMMUNICATIONS COMMISSION**
Digital television stations; table of assignments:
Nevada; comments due by 9-7-99; published 7-19-99
Frequency allocations and radio treaty matters:
50.2-50.4 and 51.4-71.0 GHz realignment; comments due by 9-7-99; published 8-11-99
Radio broadcasting:
AM broadcasters using directional antennas; regulatory requirements reduction; comments due by 9-10-99; published 7-27-99
Radio stations; table of assignments:
Georgia; comments due by 9-7-99; published 7-23-99
Texas; comments due by 9-7-99; published 7-23-99
Vermont; comments due by 9-7-99; published 7-23-99

**FEDERAL EMERGENCY MANAGEMENT AGENCY**
Flood insurance program:
Insurance coverage and rates; comments due by 9-7-99; published 8-5-99
Write-your-own program—
Private sector property insurers assistance; comments due by 9-7-99; published 8-5-99

**GENERAL SERVICES ADMINISTRATION**
Acquisition regulations:
Revision; comments due by 9-7-99; published 7-9-99
Federal Acquisition Regulation (FAR):
Ocean transportation by U.S.-flag vessels; comments due by 9-10-99; published 7-12-99

**HEALTH AND HUMAN SERVICES DEPARTMENT**
**Food and Drug Administration**
Medical devices:
Obstetrical and gynecological devices—
Female condoms classification; comments due by 9-8-99; published 6-10-99

**INTERIOR DEPARTMENT**
**Indian Affairs Bureau**
Human services:
Financial assistance and social services programs; comments due by 9-7-99; published 6-25-99

**INTERIOR DEPARTMENT**
**Fish and Wildlife Service**
Endangered and threatened species:
Alabama sturgeon; comments due by 9-10-99; published 7-12-99
Hunting and fishing:
Refuge-specific regulations; comments due by 9-10-99; published 8-11-99
Migratory bird hunting:
Seasons, limits, and shooting hours; establishment, etc.; comments due by 9-7-99; published 8-27-99

**JUSTICE DEPARTMENT**
**Immigration and Naturalization Service**
Immigration:
Aliens—
Criminal aliens in State custody convicted of nonviolent offenses; early release for removal; comments due by 9-10-99; published 7-12-99
Criminal aliens in State custody convicted of nonviolent offenses; early release for removal; correction; comments due by 9-10-99; published 7-22-99

**JUSTICE DEPARTMENT**
Foreign Agents Registration Act:
Lobbying Disclosure Act and Lobbying Disclosure Technical Amendments Act; technical amendments, etc.; comments due by 9-7-99; published 7-9-99

**LABOR DEPARTMENT**
**Mine Safety and Health Administration**
Coal mine and metal and nonmetal mine safety and health:
Underground mines—
Self-rescue devices; comments due by 9-7-99; published 7-27-99

**NATIONAL AERONAUTICS AND SPACE ADMINISTRATION**
Federal Acquisition Regulation (FAR):
Ocean transportation by U.S.-flag vessels; comments due by 9-10-99; published 7-12-99

**PERSONNEL MANAGEMENT OFFICE**
Acquisition regulations:
Health benefits, Federal employees—
Defense Department demonstration project; comments due by 9-7-99; published 7-6-99
Health benefits, Federal employees:
Defense Department demonstration project; comments due by 9-7-99; published 7-6-99

**SMALL BUSINESS ADMINISTRATION**
Business loans:
Microloan program; changes; comments due by 9-10-99; published 8-11-99

**TRANSPORTATION DEPARTMENT**
**Federal Aviation Administration**
Air traffic operating and flight rules, etc.:
Grand Canyon National Park, AZ; special flight rules in vicinity—
Commercial air tour limitation; comments due by 9-7-99; published 7-9-99
Special flight rules area and flight free zones; modification of dimensions; comments due by 9-7-99; published 7-9-99
Reduced vertical separation minimum; comments due by 9-7-99; published 7-8-99
Airworthiness directives:
Airbus; comments due by 9-8-99; published 8-9-99
American Champion Aircraft Corp.; comments due by 9-10-99; published 8-4-99
Boeing; comments due by 9-7-99; published 7-21-99
Bombardier; comments due by 9-7-99; published 8-6-99
Eurocopter France; comments due by 9-7-99; published 7-7-99
McDonnell Douglas; comments due by 9-7-99; published 7-21-99
New Piper Aircraft, Inc.; comments due by 9-8-99; published 7-12-99
Raytheon; comments due by 9-9-99; published 8-2-99
Airworthiness standards:
Special conditions—
Boeing Model 767-400ER airplane; comments due by 9-7-99; published 7-21-99
Class E airspace; comments due by 9-7-99; published 7-21-99
VOR Federal airways; comments due by 9-8-99; published 8-9-99
VOR Federal airways; correction; comments due by 9-8-99; published 8-31-99

**TRANSPORTATION DEPARTMENT**
**Maritime Administration**
Coastwise trade laws; administrative waivers; comments due by 9-7-99; published 7-8-99

**TRANSPORTATION DEPARTMENT**
**National Highway Traffic Safety Administration**
Motor vehicle safety standards:
Child restraint systems—
Child booster seats for older children; use in older cars; comments due by 9-7-99; published 7-7-99

**TRANSPORTATION DEPARTMENT**

**Research and Special Programs Administration**

Hazardous materials:

Liquefied compressed gases; transportation and unloading; comments due by 9-7-99; published 7-8-99

## LIST OF PUBLIC LAWS

This is a continuing list of public bills from the current session of Congress which have become Federal laws. It may be used in conjunction with ''P L U S'' (Public Laws Update Service) on 202–523–6641. This list is also available online at http://www.nara.gov/fedreg.

The text of laws is not published in the **Federal Register** but may be ordered in ''slip law'' (individual pamphlet) form from the Superintendent of Documents, U.S. Government Printing Office, Washington, DC 20402 (phone, 202–512–1808). The text will also be made available on the Internet from GPO Access at http://www.access.gpo.gov/nara/index.html. Some laws may not yet be available.

**H.R. 211/P.L. 106–48**

To designate the Federal building and United States courthouse located at 920 West Riverside Avenue in Spokane, Washington, as the ''Thomas S. Foley United States Courthouse'', and the plaza at the south entrance of such building and courthouse as the ''Walter F. Horan Plaza''. (Aug. 17, 1999; 113 Stat. 230)

**H.R. 1219/P.L. 106–49**

Construction Industry Payment Protection Act of 1999 (Aug. 17, 1999; 113 Stat. 231)

**H.R. 1568/P.L. 106–50**

Veterans Entrepreneurship and Small Business Development Act of 1999 (Aug. 17, 1999; 113 Stat. 233)

**H.R. 1664/P.L. 106–51**

Emergency Steel Loan Guarantee and Emergency Oil and Gas Guaranteed Loan Act of 1999 (Aug. 17, 1999; 113 Stat. 252)

**H.R. 2465/P.L. 106–52**

Military Construction Appropriations Act, 2000 (Aug. 17, 1999; 113 Stat. 259)

**S. 507/P.L. 106–53**

Water Resources Development Act of 1999. (Aug. 17, 1999; 113 Stat. 269)

**S. 606/P.L. 106–54**

For the relief of Global Exploration and Development Corporation, Kerr-McGee Corporation, and Kerr-McGee Chemical, LLC (successor to Kerr-McGee Chemical Corporation), and for other purposes. (Aug. 17, 1999; 113 Stat. 398)

**S. 1546/P.L. 106–55**

To amend the International Religious Freedom Act of 1998 to provide additional administrative authorities to the United States Commission on International Religious Freedom, and to make technical corrections to that Act, and for other purposes. (Aug. 17, 1999; 113 Stat. 401)

**Last List August 18, 1999**

## Public Laws Electronic Notification Service (PENS)

**PENS** is a free electronic mail notification service of newly enacted public laws. To subscribe, send E-mail to **listserv@www.gsa.gov** with the text message:

**SUBSCRIBE PUBLAWS-L** Your Name.

**Note:** This service is strictly for E-mail notification of new public laws. The text of laws is not available through this service. **PENS** cannot respond to specific inquiries sent to this address.