The Proposed Amendment

Accordingly, pursuant to the authority delegated to me by the Administrator, the Federal Aviation Administration proposes to amend part 39 of the Federal Aviation Regulations (14 CFR part 39) as follows:

PART 39—AIRWORTHINESS DIRECTIVES

1. The authority citation for part 39 continues to read as follows:

Authority: 49 U.S.C. 106(g), 40113, 44701.

§ 39.13 [Amended]

2. Section 39.13 is amended by adding the following new airworthiness directive:

Boeing: Docket 98–NM–339–AD.

Applicability: Model 747–100, –200, and 747SP series airplanes, line numbers 1 through 567 inclusive; equipped with aluminum diagonal brace underwing fittings; certificated in any category.

Note 1: This AD applies to each airplane identified in the preceding applicability provision, regardless of whether it has been otherwise modified, altered, or repaired in the area subject to the requirements of this AD. For airplanes that have been modified, altered, or repaired so that the performance of the requirements of this AD is affected, the owner/operator must request approval for an alternative method of compliance in accordance with paragraph (f) of this AD. The request should include an assessment of the effect of the modification, alteration, or repair on the unsafe condition addressed by this AD; and, if the unsafe condition has not been eliminated, the request should include specific proposed actions to address it.

Compliance: Required as indicated, unless accomplished previously.

To prevent loss of the underwing fitting load path due to missing, damaged, or broken taperlock bolts, which could result in separation of the engine and strut from the airplane, accomplish the following:

Repetitive Inspections

(a) Prior to the accumulation of 9,000 total flight cycles, or within 18 months after the effective date of this AD, whichever occurs later, accomplish the actions required by paragraphs (a)(1) and (a)(2) of this AD in accordance with Boeing Alert Service Bulletin 747–57A2308, dated August 6, 1998. Thereafter, repeat the inspections at intervals not to exceed 18 months until accomplishment of the actions specified in paragraph (d) of this AD.

(1) Perform a detailed visual inspection to detect missing taperlock bolts in the diagonal brace underwing fitting at the Number 1 and Number 4 pylons.

Note 2: For the purposes of this AD, a detailed visual inspection is defined as: ''An intensive visual examination of a specific structural area, system, installation, or assembly to detect damage, failure, or irregularity. Available lighting is normally supplemented with a direct source of good lighting at intensity deemed appropriate by the inspector. Inspection aids such as mirror, magnifying lenses, etc., may be used. Surface cleaning and elaborate access procedures may be required.''

(2) Perform an ultrasonic inspection to detect damaged or broken taperlock bolts in the diagonal brace underwing fitting at the Number 1 and Number 4 pylons.

Corrective Actions

(b) If any missing, damaged, or broken taperlock bolt is detected during any inspection required by paragraph (a) of this AD, prior to further flight, perform the applicable corrective actions (i.e., inspection, drill/ream, and replacement) in accordance with Boeing Alert Service Bulletin 747–57A2308, dated August 6, 1998; except as provided in paragraph (c) of this AD. Replacement of any taperlock bolt with a new bolt in accordance with this paragraph constitutes terminating action for the repetitive inspections required by paragraph (a) of this AD for that bolt only.

(c) If any crack is detected during the inspection required by paragraph (b) of this AD and the damage to a bolt hole exceeds first oversize (for 0.5-inch bolts) or second oversize (for 0.4375-inch bolts); and the service bulletin specifies to contact Boeing for appropriate Action: Prior to further flight, repair in accordance with a method approved by the Manager, Seattle Aircraft Certification Office (ACO), FAA, Transport Airplane Directorate; or in accordance with a Boeing Company Designated Engineering Representative who has been authorized by the Manager, Seattle ACO, to make such findings. For a repair method to be approved by the Manager, Seattle ACO, as required by this paragraph, the Manager's approval letter must specifically reference this AD.

Terminating Action

(d) Within 48 months after the effective date of this AD, accomplish the actions required by paragraphs (d)(1) and (d)(2) of this AD in accordance with Boeing Alert Service Bulletin 747–57A2308, dated August 6, 1998. Accomplishment of the actions specified in this paragraph constitutes terminating action for the repetitive inspection requirements of this AD.

(1) Prior to accomplishing the replacement required by paragraph (d)(2) of this AD, perform an open hole high frequency eddy current inspection to detect cracks at the bolt hole locations of the aft 10 taperlock bolts. If any cracking is detected, prior to further flight, perform applicable corrective actions in accordance with paragraph (c) of this AD.

(2) Replace the aft 10 taperlock bolts with new bolts in the diagonal brace underwing fitting at the Number 1 and Number 4 pylons.

Spares

(e) As of the effective date of this AD, no person shall install a bolt, part number BACB30PE( ) * ( ), or any other bolt made of 4340, 8740, or PH13–8 Mo steel, in the locations specified in this AD, on any airplane.

Alternate Method of Compliance

(f) An alternative method of compliance or adjustment of the compliance time that provides an acceptable level of safety may be used if approved by the Manager, Seattle ACO. Operators shall submit their requests through an appropriate FAA Principal Maintenance Inspector, who may add comments and then send it to the Manager, Seattle ACO.

Note 3: Information concerning the existence of approved alternative methods of compliance with this AD, if any, may be obtained from the Seattle ACO.

Special Flight Permits

(g) Special flight permits may be issued in accordance with sections 21.197 and 21.199 of the Federal Aviation Regulations (14 CFR 21.197 and 21.199) to operate the airplane to a location where the requirements of this AD can be accomplished.

Issued in Renton, Washington, on August 24, 1999.

Vi L. Lipski,

Acting Manager, Transport Airplane Directorate, Aircraft Certification Service.

[FR Doc. 99–22529 Filed 8–30–99; 8:45 am]

BILLING CODE 4910–13–P

DEPARTMENT OF TRANSPORTATION

Federal Aviation Administration

14 CFR Part 39

[Docket No. 98–NM–300–AD]

RIN 2120–AA64

Airworthiness Directives; Mitsubishi Model YS–11 and YS–11A Series Airplanes

AGENCY: Federal Aviation Administration, DOT.

ACTION: Notice of proposed rulemaking (NPRM).

SUMMARY: This document proposes the adoption of a new airworthiness directive (AD) that is applicable to all Mitsubishi Model YS–11 and YS–11A series airplanes. This proposal would require repetitive removal of the spinner; repetitive detailed visual inspections of the propeller hub to detect fatigue cracking; and replacement of a propeller hub with a new propeller hub, if necessary. This proposal is prompted by issuance of mandatory continuing airworthiness information by a foreign civil airworthiness authority. The actions specified by the proposed AD are intended to detect and correct fatigue cracking of the propeller hub, which could cause the loss of the propeller.

DATES: Comments must be received by September 30, 1999.

ADDRESSES: Submit comments in triplicate to the Federal Aviation Administration (FAA), Transport Airplane Directorate, ANM–114,

Attention: Rules Docket No. 98–NM–300–AD, 1601 Lind Avenue, SW., Renton, Washington 98055–4056. Comments may be inspected at this location between 9:00 a.m. and 3:00 p.m., Monday through Friday, except Federal holidays.

The service information referenced in the proposed rule may be obtained from Nihon Aeroplane Manufacturing, Toranomon Daiichi, Kotohire-Cho, Shiba, Minato-Ku, Tokyo, Japan. This information may be examined at the FAA, Transport Airplane Directorate, 1601 Lind Avenue, SW., Renton, Washington; or at the FAA, Transport Airplane Directorate, Los Angeles Aircraft Certification Office, 3960 Paramount Boulevard, Lakewood, California.

FOR FURTHER INFORMATION CONTACT: Jon Mowery, Aerospace Engineer, Airframe Branch, ANM–120L, FAA, Transport Airplane Directorate, Los Angeles Aircraft Certification Office, 3960 Paramount Boulevard, Lakewood, California 90712–4137; telephone (562) 627–5322; fax (562) 627–5210.

SUPPLEMENTARY INFORMATION:

Comments Invited

Interested persons are invited to participate in the making of the proposed rule by submitting such written data, views, or arguments as they may desire. Communications shall identify the Rules Docket number and be submitted in triplicate to the address specified above. All communications received on or before the closing date for comments, specified above, will be considered before taking action on the proposed rule. The proposals contained in this notice may be changed in light of the comments received.

Comments are specifically invited on the overall regulatory, economic, environmental, and energy aspects of the proposed rule. All comments submitted will be available, both before and after the closing date for comments, in the Rules Docket for examination by interested persons. A report summarizing each FAA-public contact concerned with the substance of this proposal will be filed in the Rules Docket.

Commenters wishing the FAA to acknowledge receipt of their comments submitted in response to this notice must submit a self-addressed, stamped postcard on which the following statement is made: ''Comments to Docket Number 98–NM–300–AD.'' The postcard will be date stamped and returned to the commenter.

Availability of NPRMs

Any person may obtain a copy of this NPRM by submitting a request to the FAA, Transport Airplane Directorate, ANM–114, Attention: Rules Docket No. 98–NM–300–AD, 1601 Lind Avenue, SW., Renton, Washington 98055–4056.

Discussion

The Japan Civil Aviation Bureau (JCAB), which is the airworthiness authority for Japan, notified the FAA that an unsafe condition may exist on all Mitsubishi YS–11 and YS–11A series airplanes. The JCAB advises that cracking has been found on propeller hubs. This cracking has been attributed to material fatigue. This condition, if not corrected, could result in the loss of the propeller.

The JCAB has issued Japanese airworthiness directive TCD–4667–97, dated October 13, 1997, which describes procedures for repetitive removal of the spinner; repetitive detailed visual inspections to detect fatigue cracking of the propeller hub; and replacement of cracked propeller hubs with new propeller hubs, if necessary. The JCAB classified these actions as mandatory in order to assure the continued airworthiness of these airplanes in Japan.

FAA's Conclusions

These airplane models are manufactured in Japan and are type certificated for operation in the United States under the provisions of section 21.29 of the Federal Aviation Regulations (14 CFR 21.29) and the applicable bilateral airworthiness agreement. Pursuant to this bilateral airworthiness agreement, the JCAB has kept the FAA informed of the situation described above. The FAA has examined the findings of the JCAB, reviewed all available information, and determined that AD action is necessary for products of this type design that are certificated for operation in the United States.

Explanation of Requirements of Proposed Rule

Since an unsafe condition has been identified that is likely to exist or develop on other airplanes of the same type design registered in the United States, the proposed AD would require accomplishment of the actions specified in the Japanese airworthiness directive described previously.

Differences Between Proposed Rule and Foreign Airworthiness Directive

The proposed AD would differ from the parallel Japanese airworthiness directive in that it would require accomplishment of the inspection within 25 flight hours or 30 days after the effective date of this AD, whichever occurs first. The parallel Japanese airworthiness directive requires accomplishment of the inspection prior to further flight, unless an inspection was performed within 25 flight hours before the effective date of the Japanese airworthiness directive. In developing an appropriate compliance time for this AD, the FAA considered not only the safety implications, but the Japanese airworthiness authority's requirements, the availability of required parts, and the practical aspect of accomplishing the inspection within an interval of time that parallels normal scheduled maintenance for affected operators. The FAA also considered the fact that the Japanese airworthiness directive (containing the procedures for accomplishing the required actions) has been available to all operators of Mitsubishi Model YS–11 and YS–11A series airplanes since October 1997. Therefore, U.S. operators have had ample time since then to consider initiating those actions, which this proposed AD ultimately mandates.

Cost Impact

The FAA estimates that 25 airplanes of U.S. registry would be affected by this proposed AD, that it would take approximately 32 work hours per airplane to accomplish the proposed inspection, and that the average labor rate is $60 per work hour. Based on these figures, the cost impact of the proposed AD on U.S. operators is estimated to be $48,000, or $1,920 per airplane, per inspection cycle.

The cost impact figure discussed above is based on assumptions that no operator has yet accomplished any of the proposed requirements of this AD action, and that no operator would accomplish those actions in the future if this AD were not adopted.

Regulatory Impact

The regulations proposed herein would not have substantial direct effects on the States, on the relationship between the national government and the States, or on the distribution of power and responsibilities among the various levels of government. Therefore, in accordance with Executive Order 12612, it is determined that this proposal would not have sufficient federalism implications to warrant the preparation of a Federalism Assessment.

For the reasons discussed above, I certify that this proposed regulation (1) is not a ''significant regulatory action'' under Executive Order 12866; (2) is not a ''significant rule'' under the DOT

Regulatory Policies and Procedures (44 FR 11034, February 26, 1979); and (3) if promulgated, will not have a significant economic impact, positive or negative, on a substantial number of small entities under the criteria of the Regulatory Flexibility Act. A copy of the draft regulatory evaluation prepared for this action is contained in the Rules Docket. A copy of it may be obtained by contacting the Rules Docket at the location provided under the caption **ADDRESSES**.

List of Subjects in 14 CFR Part 39

Air transportation, Aircraft, Aviation safety, Safety.

The Proposed Amendment

Accordingly, pursuant to the authority delegated to me by the Administrator, the Federal Aviation Administration proposes to amend part 39 of the Federal Aviation Regulations (14 CFR part 39) as follows:

PART 39—AIRWORTHINESS DIRECTIVES

1. The authority citation for part 39 continues to read as follows:

Authority: 49 U.S.C. 106(g), 40113, 44701.

§ 39.13 [Amended]

2. Section 39.13 is amended by adding the following new airworthiness directive:

Mitsubish Heavy Industries, Ltd.: Docket 98–NM–300–AD.

Applicability: All Model YS–11 and YS–11A series airplanes, certificated in any category.

Note 1: This AD applies to each airplane identified in the preceding applicability provision, regardless of whether it has been modified, altered, or repaired in the area subject to the requirements of this AD. For airplanes that have been modified, altered, or repaired so that the performance of the requirements of this AD is affected, the owner/operator must request approval for an alternative method of compliance in accordance with paragraph (b) of this AD. The request should include an assessment of the effect of the modification, alteration, or repair on the unsafe condition addressed by this AD; and, if the unsafe condition has not been eliminated, the request should include specific proposed actions to address it.

Compliance: Required as indicated, unless accomplished previously.

To detect and correct fatigue cracking of the propeller hub, which could cause the loss of the propeller, accomplish the following:

Inspection and Replacement

(a) Within 25 flight hours or 30 days after the effective date of this AD, whichever occurs first, remove the spinner and perform a detailed visual inspection for cracking of the propeller hub in the crack area shown in Figure 1 of this AD.

Note 2: For the purposes of this AD, a detailed visual inspection is defined as: ''An intensive visual examination of a specific structural area, system, installation, or assembly to detect damage, failure, or irregularity. Available lighting is normally supplemented with a direct source of good lighting at intensity deemed appropriate by the inspector. Inspection aids such as mirror, magnifying lenses, etc., may be used. Surface cleaning and elaborate access procedures may be required.''

(1) If no crack is found, repeat the actions required by paragraph (a) of this AD thereafter at intervals not to exceed 25 flight hours.

(2) If any crack is detected, prior to further flight, replace the hub with a new hub. Repeat the actions required by paragraph (a) of this AD thereafter at intervals not to exceed 25 flight hours.

Alternative Methods of Compliance

(b) An alternative method of compliance or adjustment of the compliance time that provides an acceptable level of safety may be used if approved by the Manager, Los Angeles Aircraft Certification Office (ACO), FAA, Transport Airplane Directorate. Operators shall submit their requests through an appropriate FAA Principal Maintenance Inspector, who may add comments and then send it to the Manager, Los Angeles ACO.

Note 3: Information concerning the existence of approved alternative methods of compliance with this AD, if any, may be obtained from the Los Angeles ACO.

Special Flight Permits

(c) Special flight permits may be issued for non-revenue bearing flights with essential crew only in accordance with sections 21.197 and 21.199 of the Federal Aviation Regulations (14 CFR 21.197 and 21.199) to operate the airplane to a location where the requirements of this AD can be accomplished.

Note 4: The subject of this AD is addressed in Japanese airworthiness directive TCD–4667–97, dated October 13, 1997.

BILLING CODE 4910–13–P

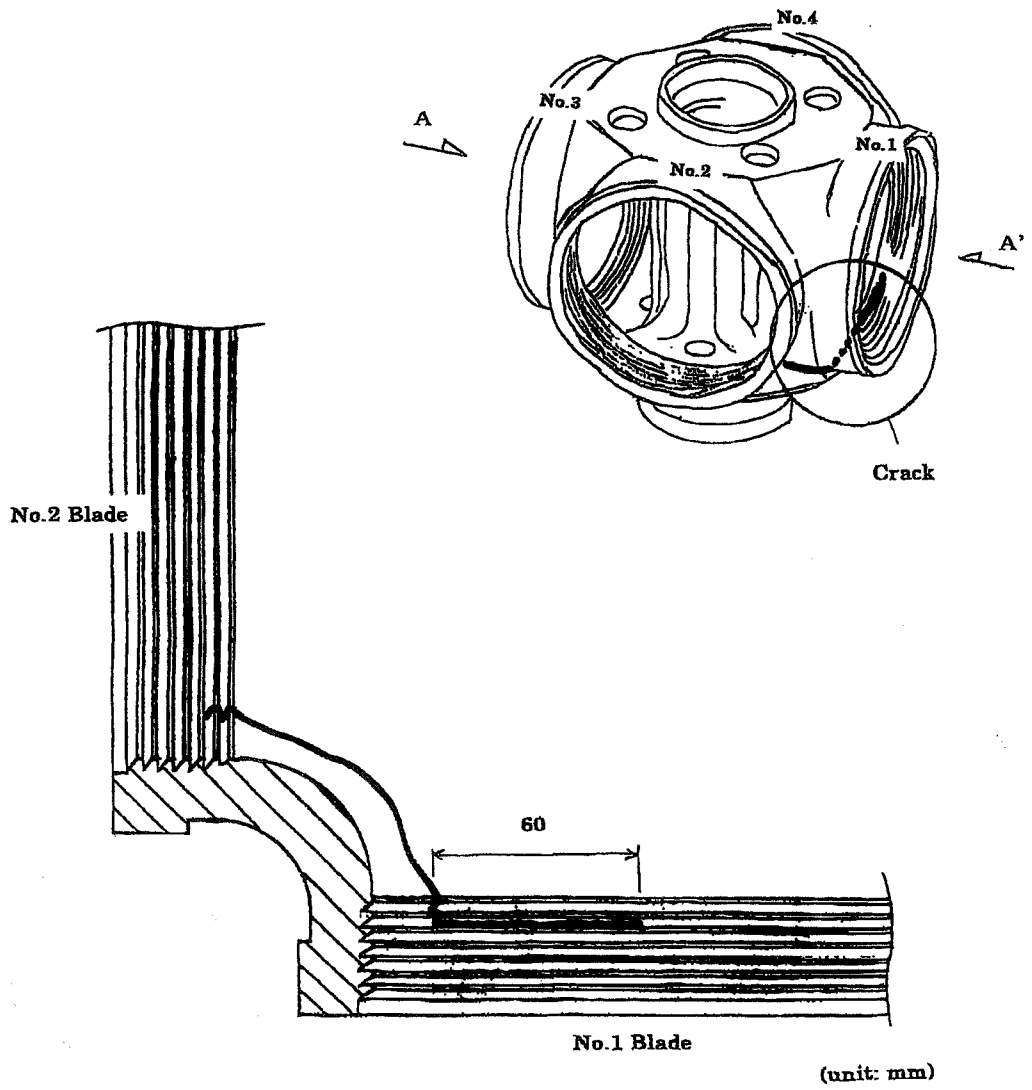

Figure 1 (Sheet 1 of 2)

HUB CRACK - VIEW FROM TOP

(Cut A – A')

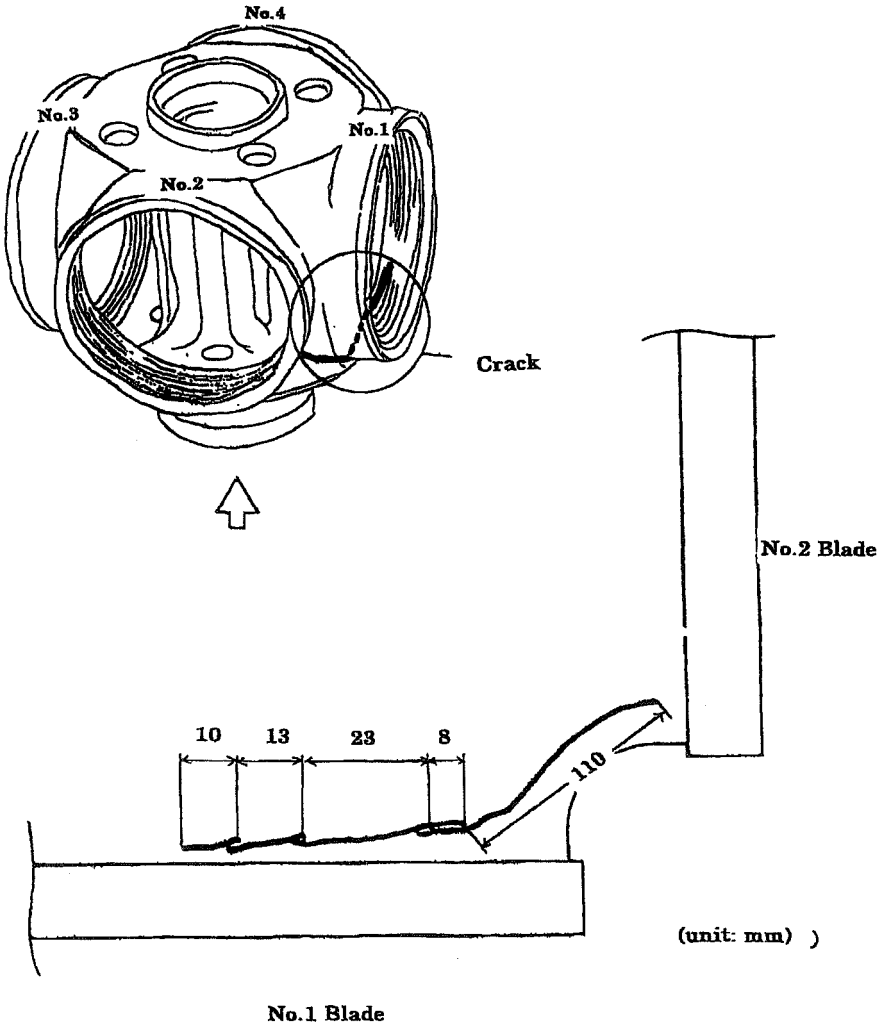

Figure 1 (Sheet 2 of 2)

HUB CRACK - VIEW FROM BOTTOM

Issued in Renton, Washington, on August 24, 1999.

Vi L. Lipski,

Acting Manager, Transport Airplane Directorate, Aircraft Certification Service.

[FR Doc. 99–22528 Filed 8–30–99; 8:45 am]

BILLING CODE 4910–13–C