7–2–99
Vol. 64 No. 127
Pages 35921–36236

federal register

Friday
July 2, 1999

The **FEDERAL REGISTER** is published daily, Monday through Friday, except official holidays, by the Office of the Federal Register, National Archives and Records Administration, Washington, DC 20408, under the Federal Register Act (44 U.S.C. Ch. 15) and the regulations of the Administrative Committee of the Federal Register (1 CFR Ch. I). The Superintendent of Documents, U.S. Government Printing Office, Washington, DC 20402 is the exclusive distributor of the official edition.

The **Federal Register** provides a uniform system for making available to the public regulations and legal notices issued by Federal agencies. These include Presidential proclamations and Executive Orders, Federal agency documents having general applicability and legal effect, documents required to be published by act of Congress, and other Federal agency documents of public interest.

Documents are on file for public inspection in the Office of the Federal Register the day before they are published, unless the issuing agency requests earlier filing. For a list of documents currently on file for public inspection, see http://www.nara.gov/fedreg.

The seal of the National Archives and Records Administration authenticates the Federal Register as the official serial publication established under the Federal Register Act. Under 44 U.S.C. 1507, the contents of the **Federal Register** shall be judicially noticed.

The **Federal Register** is published in paper and on 24x microfiche. It is also available online at no charge as one of the databases on GPO Access, a service of the U.S. Government Printing Office.

The online edition of the **Federal Register** is issued under the authority of the Administrative Committee of the Federal Register as the official legal equivalent of the paper and microfiche editions (44 U.S.C. 4101 and 1 CFR 5.10). It is updated by 6 a.m. each day the **Federal Register** is published and it includes both text and graphics from Volume 59, Number 1 (January 2, 1994) forward.

GPO Access users can choose to retrieve online **Federal Register** documents as TEXT (ASCII text, graphics omitted), PDF (Adobe Portable Document Format, including full text and all graphics), or SUMMARY (abbreviated text) files. Users should carefully check retrieved material to ensure that documents were properly downloaded.

On the World Wide Web, connect to the **Federal Register** at http://www.access.gpo.gov/nara. Those without World Wide Web access can also connect with a local WAIS client, by Telnet to swais.access.gpo.gov, or by dialing (202) 512-1661 with a computer and modem. When using Telnet or modem, type swais, then log in as guest with no password.

For more information about GPO Access, contact the GPO Access User Support Team by E-mail at gpoaccess@gpo.gov; by fax at (202) 512–1262; or call (202) 512–1530 or 1–888–293–6498 (toll free) between 7 a.m. and 5 p.m. Eastern time, Monday–Friday, except Federal holidays.

The annual subscription price for the **Federal Register** paper edition is $555, or $607 for a combined **Federal Register,** Federal Register Index and List of CFR Sections Affected (LSA) subscription; the microfiche edition of the **Federal Register** including the Federal Register Index and LSA is $220. Six month subscriptions are available for one-half the annual rate. The charge for individual copies in paper form is $8.00 for each issue, or $8.00 for each group of pages as actually bound; or $1.50 for each issue in microfiche form. All prices include regular domestic postage and handling. International customers please add 25% for foreign handling. Remit check or money order, made payable to the Superintendent of Documents, or charge to your GPO Deposit Account, VISA, MasterCard or Discover. Mail to: New Orders, Superintendent of Documents, P.O. Box 371954, Pittsburgh, PA 15250–7954.

There are no restrictions on the republication of material appearing in the **Federal Register.**

How To Cite This Publication: Use the volume number and the page number. Example: 64 FR 12345.

SUBSCRIPTIONS AND COPIES

PUBLIC	
Subscriptions:	
Paper or fiche	**202–512–1800**
Assistance with public subscriptions	**512–1806**
General online information	**202–512–1530; 1–888–293–6498**
Single copies/back copies:	
Paper or fiche	**512–1800**
Assistance with public single copies	**512–1803**
FEDERAL AGENCIES	
Subscriptions:	
Paper or fiche	**523–5243**
Assistance with Federal agency subscriptions	**523–5243**

Printed on recycled paper.

Contents

Federal Register

Vol. 64, No. 127

Friday, July 2, 1999

Agriculture Department
See Forest Service
See Rural Housing Service

Blind or Severely Disabled, Committee for Purchase From People Who Are
See Committee for Purchase From People Who Are Blind or Severely Disabled

Census Monitoring Board
NOTICES
Meetings, 35988

Children and Families Administration
See Community Services Office

Civil Rights Commission
NOTICES
Meetings; Sunshine Act, 35988–35989

Commerce Department
See National Oceanic and Atmospheric Administration
NOTICES
Agency information collection activities:
Submission for OMB review; comment request, 35989

Committee for Purchase From People Who Are Blind or Severely Disabled
NOTICES
Procurement list; additions and deletions, 35987–35988

Committee for the Implementation of Textile Agreements
NOTICES
Cotton, wool, and man-made textiles:
China, 35989–35991
Indonesia, 35991–35992

Commodity Futures Trading Commission
NOTICES
Meetings:
Global Markets Advisory Committee, 35992

Community Services Office
NOTICES
Grants and cooperative agreements; availability, etc.:
Assets for Independence Demonstration Program, 36183–36208

Defense Department
RULES
Federal Acquisition Regulation (FAR):
Affirmative action reform in Federal procurement, 36221–36225
Small entity compliance guide, 36225
NOTICES
Agency information collection activities:
Proposed collection; comment request, 35992–35993

Drug Enforcement Administration
RULES
Schedules of controlled subtances:
Synthetic dronabinol; placement into Schedule III, 35928–35930

Education Department
NOTICES
Grants and cooperative agreements; availability, etc.:
Elementary and secondary education—
Advanced Placement Incentive Program, 35993–35994

Employment and Training Administration
NOTICES
Adjustment assistance:
Ansewn Shoe Co., 36043
Nabors Drilling USA, Inc., 36043–36044
NANA Management Services et al., 36044
Private Line Group, Inc., 36044
Texaco North American Production, 36044–36045
Woolrich, Inc., et al., 36045–36046
NAFTA transitional adjustment assistance:
Logistix, 36046
Mark Steel Jewelry, 36046

Employment Standards Administration
NOTICES
Minimum wages for Federal and federally-assisted construction; general wage determination decisions, 36046–36049

Energy Department
See Federal Energy Regulatory Commission
PROPOSED RULES
Assistance to foreign atomic energy activities:
Miscellaneous amendments, 35959–35963
NOTICES
Meetings:
Environmental Management Site-Specific Advisory Board—
Idaho National Engineering and Environmental Laboratory, ID, 35995
Rocky Flats, CO, 35994–35995

Environmental Protection Agency
RULES
Air quality implementation plans; approval and promulgation; various States:
Iowa, 35941
Louisiana, 35930–35941
NOTICES
Environmental statements; availability, etc.:
Agency statements—
Comment availability, 35998–35999
Weekly receipts, 35999
Pesticide, food, and feed additive petitions:
Rohm & Haas Co., 35999–36008

Executive Office of the President
See Presidential Documents

Federal Aviation Administration
PROPOSED RULES
Air traffic operating and flight rules, etc.:
High density rule; interpretation, 35963–35965

Federal Communications Commission
RULES
Radio broadcasting:
Broadcast licensees; main studio and public inspection file requirements, 35941–35948
Television broadcasting:
Telecommunications Act of 1996; implementation—
Cable Act reform provisions, 35948–35951
NOTICES
Agency information collection activities:
Submission for OMB review; comment request, 36008–36009
Common carrier services:
Wireless telecommunications services—
Paging service spectrum auction; reserve prices or minimum opening bids and other auction procedural issues; comment request, 36009–36013
Public safety radio communications plans:
Florida, 36013
Television broadcasting:
Cable television systems—
Video programming delivery; market competition status; annual assessment, 36013–36016

Federal Deposit Insurance Corporation
NOTICES
Meetings; Sunshine Act, 36016

Federal Energy Regulatory Commission
NOTICES
Environmental statements; availability, etc.:
Dunkirk Water Power Co., Inc., 35997
Environmental statements; notice of intent:
Alliance Pipeline L.P., 35997–35998
Applications, hearings, determinations, etc.:
Coral Mexico Pipeline, LLC, 35995–35996
KN Interstate Gas Transmission Co., 35996
Reliant Energy Gas Transmission Co., 35996

Federal Highway Administration
NOTICES
Environmental statements; notice of intent:
Pierce County, WA, 36065–36066

Federal Mine Safety and Health Review Commission
NOTICES
Meetings; Sunshine Act, 36049–36050

Federal Reserve System
NOTICES
Banks and bank holding companies:
Change in bank control, 36016
Formations, acquisitions, and mergers, 36016–36017
Permissible nonbanking activities, 36017–36018
Meetings; Sunshine Act, 36018

Federal Trade Commission
PROPOSED RULES
Trade regulation rules:
Funeral industry practices, 35965–35966

Financial Management Service
See Fiscal Service

Fiscal Service
NOTICES
Interest rates:
Renegotiation Board and prompt payment rates, 36068

Fish and Wildlife Service
NOTICES
Endangered and threatened species:
Recovery plans—
Giant garter snake, 36033–36034
Endangered and threatened species permit applications, 36032–36033

Food and Drug Administration
RULES
Animal drugs, feeds, and related products:
Diclazuril, 35923–35924
Medical devices:
Dental and mammographic x-ray devices; performance standards, 35924–35928
PROPOSED RULES
Animal drugs, feeds, and related products:
Animal Drug Availability Act; Veterinary Feed Directive implementation, 35966–35972
NOTICES
Agency information collection activities:
Submission for OMB review; comment request, 36019–36020
Food additive petitions:
National Starch & Chemical Co., 36021
Troy Corp., 36021

Forest Service
NOTICES
Meetings:
Lake Tahoe Basin Federal Advisory Committee, 35986

General Services Administration
RULES
Federal Acquisition Regulation (FAR):
Affirmative action reform in Federal procurement, 36221–36225
Small entity compliance guide, 36225
NOTICES
Federal property management:
U.S. Government Transportation Request (SF 1169); elimination; correction, 36018–36019

Health and Human Services Department
See Community Services Office
See Food and Drug Administration
See Health Care Financing Administration
See Indian Health Service
See National Institutes of Health

Health Care Financing Administration
RULES
Medicare and Medicaid:
Hospital participation conditions; patients' rights, 36069–36089
NOTICES
Meetings:
Peer Review Organizations' Sixth Round Contract activities; implementation, 36021–36022

Housing and Urban Development Department
RULES
HUD-owned properties:
HUD-acquired single family property disposition—
Officer Next Door Sales Program, 36209–36213

PROPOSED RULES
Mortgage and loan insurance programs:
Single family mortgage insurance—
Appraiser roster; placement and removal procedures, 36215–36219
NOTICES
Grants and cooperative agreements; availability, etc.:
Facilities to assist homeless—
Excess and surplus Federal property, 36029–36030

Indian Health Service
NOTICES
Agency information collection activities:
Submission for OMB review; comment request, 36022–36023

Interior Department
See Fish and Wildlife Service
See Land Management Bureau
See National Park Service
NOTICES
Central Utah Water Conservancy District:
Jordan Aqueduct and Jordanelle Dam; hydroelectric power development; contract negotiation, 36030–36032

Internal Revenue Service
RULES
Income taxes:
Consolidated return regulations—
Consolidated groups; losses and deductions of members use limitations, 36091–36116
Consolidated groups; net operating loss carryforwards and built-in losses and credits following ownership change; limitations, 36116–36175
Short taxable years and controlled groups, 36175–36181

International Trade Commission
NOTICES
Import investigations:
CD-rom controllers and products containing same, 36038–36040
Meetings; Sunshine Act, 36040–36041

Justice Department
See Drug Enforcement Administration
NOTICES
Meetings:
Global Criminal Justice Information Network Advisory Committee, 36041
Pollution control; consent judgments:
BASF Corp., 36042
Jones, Gene T., et al., 36041–36042
PP&L, Inc., 36041
SPS Technologies, Inc., 36042

Labor Department
See Employment and Training Administration
See Employment Standards Administration
See Occupational Safety and Health Administration
NOTICES
Agency information collection activities:
Submission for OMB review; comment request, 36042–36043

Land Management Bureau
NOTICES
Realty actions; sales, leases, etc.:
Arizona, 36034
Nevada, 36034–36035

Merit Systems Protection Board
PROPOSED RULES
Freedom of Information Act; implementation, 35952–35957
Privacy Act; implementation, 35957–35959

Mine Safety and Health Federal Review Commission
See Federal Mine Safety and Health Review Commission

National Aeronautics and Space Administration
RULES
Federal Acquisition Regulation (FAR):
Affirmative action reform in Federal procurement, 36221–36225
Small entity compliance guide, 36225

National Institutes of Health
NOTICES
Meetings:
National Cancer Institute, 36023
National Center for Research Resources, 36024
National Heart, Lung, and Blood Institute, 36024
National Institute of Child Health and Human Development, 36024
National Institute of Diabetes and Digestive and Kidney Diseases, 36024–36027
National Institute of Mental Health, 36025–36026
National Institute on Aging, 36025–36026
National Institute on Alcohol Abuse and Alcoholism, 36026–36027
Scientific Review Center, 36027–36029
Patent licenses; non-exclusive, exclusive, or partially exclusive:
Ash Stevens, Inc., 36029

National Oceanic and Atmospheric Administration
PROPOSED RULES
Fishery conservation and management:
Caribbean, Gulf, and South Atlantic fisheries—
Gulf of Mexico reef fish, 35981–35984
Northeastern United States fisheries—
New England Fishery Management Council; meetings, 35984–35985

National Park Service
NOTICES
Native American human remains and associated funerary objects:
Oregon State Museum of Anthropology, University of Oregon, OR; inventory, 36035–36038

Nuclear Regulatory Commission
NOTICES
Agency information collection activities:
Submission for OMB review; comment request, 36050

Occupational Safety and Health Administration
PROPOSED RULES
Consultation agreements; procedural changes, 35972–35981
NOTICES
Agency information collection activities:
Proposed collection; comment request, 36049

Postal Service
NOTICES
Meetings; Sunshine Act, 36050–36051
Privacy Act:
Systems of records, 36051–36052

Presidential Documents
PROCLAMATIONS
Trade:
Generalized System of Preferences; modification of duty-free treatment (Proc. 7206), 36227–36235
ADMINISTRATIVE ORDERS
Canada; civil uses of atomic energy; proposed protocol amending the agreement with U.S. (Presidential Determination No. 99-30 of June 23, 1999), 35921

Public Debt Bureau
See Fiscal Service

Public Health Service
See Food and Drug Administration
See Indian Health Service
See National Institutes of Health

Railroad Retirement Board
NOTICES
Agency information collection activities:
Submission for OMB review; comment request, 36052

Rural Housing Service
NOTICES
Agency information collection activities:
Proposed collection; comment request, 35986–35987

Securities and Exchange Commission
NOTICES
Self-regulatory organizations; proposed rule changes:
American Stock Exchange LLC, 36055–36058 , 36057–36058
Boston Stock Exchange, Inc., 36058–36059
National Association of Securities Dealers, Inc., 36059–36062
Options Clearing Corp., 36062–36063
Pacific Exchange, Inc., 36063–36064
Applications, hearings, determinations, etc.:
Goldman Sachs Asset Management et al., 36052–36054
Public utility holding company filings, 36054–36055

State Department
NOTICES
Meetings:
International Economic Policy Advisory Committee, 36065

Surface Transportation Board
NOTICES
Motor carriers:
Finance applications—
Tedesco, Francis, et al., 36066–36067
Railroad services abandonment:
Boston & Maine Corp., 36067–36068

Textile Agreements Implementation Committee
See Committee for the Implementation of Textile Agreements

Transportation Department
See Federal Aviation Administration
See Federal Highway Administration
See Surface Transportation Board

Treasury Department
See Fiscal Service
See Internal Revenue Service

Separate Parts In This Issue

Part II
Department of Health and Human Services, Health Care Financing Administration, 36069–36089

Part III
Department of Treasury, Internal Revenue Service, 36091–36181

Part IV
Department of Health and Human Services, Children and Families Administration, 36183–36208

Part V
Department of Housing and Urban Development, 36209–36213

Part VI
Department of Housing and Urban Development, 36215–36219

Part VII
Department of Defense, General Services Administration, National Aeronautics and Space Administration, 36221–36225

Part VIII
The President, 36227–36235

Reader Aids
Consult the Reader Aids section at the end of this issue for phone numbers, online resources, finding aids, reminders, and notice of recently enacted public laws.

CFR PARTS AFFECTED IN THIS ISSUE

A cumulative list of the parts affected this month can be found in the Reader Aids section at the end of this issue.

3 CFR

Proclamations:

6575 (See Proc. 7206) 26229

7206 26229

Administrative Orders:

Presidential Determination:

No. 99–30 of June 23, 1999 35921

5 CFR

Proposed Rules:

1204 35952

1205 35957

10 CFR

Proposed Rules:

810 35959

14 CFR

Proposed Rules:

93 35963

16 CFR

Proposed Rules:

453 35965

21 CFR

556 35923

558 35923

1020 35924

1308 35928

1312 35928

Proposed Rules:

510 35966

514 35966

558 35966

24 CFR

291 36210

Proposed Rules:

200 36216

26 CFR

1 (3 documents) 36092, 36116, 36175

301 36092

602 (3 documents) 26092, 36116, 36175

29 CFR

Proposed Rules:

1908 35972

40 CFR

52 (2 documents) 35930, 35941

42 CFR

482 36070

47 CFR

73 35941

76 35948

48 CFR

Ch. 1 36222

1 36222

12 36222

14 36222

15 36222

19 36222

26 36222

33 36222

52 36222

53 36222

50 CFR

Proposed Rules:

622 35981

648 35984

Federal Register
Vol. 64, No. 127
Friday, July 2, 1999

Presidential Documents

Title 3—

The President

Presidential Determination No. 99–30 of June 23, 1999

Presidential Determination on the Proposed Protocol Amending the Agreement for Cooperation Concerning Civil Uses of Atomic Energy Between the Government of the United States of America and the Government of Canada

Memorandum for the Secretary of State [and] the Secretary of Energy

I have considered the proposed Protocol Amending the Agreement for Cooperation Concerning Civil Uses of Atomic Energy Between the Government of the United States of America and the Government of Canada signed at Washington on June 15, 1955, as amended, along with the views, recommendations, and statements of the interested agencies.

I have determined that the performance of the Protocol will promote, and will not constitute an unreasonable risk to, the common defense and security. Pursuant to section 123 b. of the Atomic Energy Act of 1954, as amended (42 U.S.C. 2153(b)), I hereby approve the proposed Protocol and authorize you to arrange for its execution.

The Secretary of State is authorized and directed to publish this determination in the **Federal Register**.

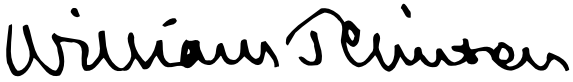

THE WHITE HOUSE,
June 23, 1999.

[FR Doc. 99–17013
Filed 7–1–99; 8:45 am]
Billing code 4710–10–M

Rules and Regulations

Federal Register
Vol. 64, No. 127
Friday, July 2, 1999

This section of the FEDERAL REGISTER contains regulatory documents having general applicability and legal effect, most of which are keyed to and codified in the Code of Federal Regulations, which is published under 50 titles pursuant to 44 U.S.C. 1510.

The Code of Federal Regulations is sold by the Superintendent of Documents. Prices of new books are listed in the first FEDERAL REGISTER issue of each week.

DEPARTMENT OF HEALTH AND HUMAN SERVICES

Food and Drug Administration

21 CFR Parts 556 and 558

Animal Drugs, Feeds, and Related Products; Diclazuril

AGENCY: Food and Drug Administration, HHS.

ACTION: Final rule.

SUMMARY: The Food and Drug Administration (FDA) is amending the animal drug regulations to reflect approval of a new animal drug application (NADA) filed by Schering-Plough Animal Health Corp. The NADA provides for the use of a Type A medicated article containing diclazuril for use in manufacturing a Type C medicated feed indicated for the prevention of coccidiosis in broiler chickens.

EFFECTIVE DATE: July 2, 1999.

FOR FURTHER INFORMATION CONTACT: Janis R. Messenheimer, Center for Veterinary Medicine (HFV–135), Food and Drug Administration, 7500 Standish Pl., Rockville, MD 20855, 301–827–7578.

SUPPLEMENTARY INFORMATION: Schering-Plough Animal Health Corp., 1095 Morris Ave., Union, NJ 07083, filed NADA 140–951, which provides for the use of a Type A medicated article containing 0.2 percent of diclazuril (Clinacox™) for use in manufacturing a Type C medicated feed indicated for the prevention of coccidiosis caused by *Eimeria tenella, E. necatrix, E. acervulina, E. brunetti, E. mitis* (*mivati*), and *E. maxima*. Because diclazuril is effective against *E. maxima* later in its life cycle, subclinical intestinal lesions may be present for a short time after infection. Diclazuril was shown in studies to reduce lesion scores and improve performance and health of birds challenged with *E. maxima*. The NADA is approved as of April 21, 1999, and the regulations are amended in 21 CFR part 558 by adding § 558.198 to reflect the approval. The basis of approval is discussed in the freedom of information summary.

Also, the regulations are amended in 21 CFR part 556 by adding § 556.175 to establish tolerances for diclazuril residues in the edible tissues of chickens and to establish an acceptable daily intake (ADI) for total diclazuril residues. The ADI represents the total amount of drug residue that can safely be consumed by humans every day.

In accordance with the freedom of information provisions of 21 CFR part 20 and 514.11(e)(2)(ii), a summary of safety and effectiveness data and information submitted to support approval of this application may be seen in the Dockets Management Branch (HFA–305), Food and Drug Administration, 5630 Fishers Lane, rm. 1061, Rockville, MD 20852, between 9 a.m. and 4 p.m., Monday through Friday.

Under section 512(c)(2)(F)(i) of the Federal Food, Drug, and Cosmetic Act (21 U.S.C. 360b(c)(2)(F)(i)), this approval qualifies for 5 years of marketing exclusivity for the use of diclazuril in chicken feed beginning April 21, 1999, because no active ingredient (including any ester or salt of the active ingredient) has been approved in any other application.

The agency has carefully considered the potential environmental effects of this action. FDA has concluded that the action will not have a significant impact on the human environment, and that an environmental impact statement is not required. The agency's finding of no significant impact and the evidence supporting that finding, contained in an environmental assessment, may be seen in the Dockets Management Branch (address above) between 9 a.m. and 4 p.m., Monday through Friday.

This rule does not meet the definition of ''rule'' in 5 U.S.C. 804(3)(A) because it is a rule of ''particular applicability.'' Therefore, it is not subject to the congressional review requirements in 5 U.S.C. 801–808.

List of Subjects

21 CFR Part 556

Animal drugs, Foods.

21 CFR Part 558

Animal drugs, Animal feeds.

Therefore, under the Federal Food, Drug, and Cosmetic Act and under authority delegated to the Commissioner of Food and Drugs and redelegated to the Center for Veterinary Medicine, 21 CFR parts 556 and 558 are amended as follows:

PART 556—TOLERANCES FOR RESIDUES OF NEW ANIMAL DRUGS IN FOOD

1. The authority citation for 21 CFR part 556 continues to read as follows:

Authority: 21 U.S.C. 342, 360b, 371.

2. Section 556.175 is added to subpart B to read as follows:

§ 556.175 Diclazuril.

(a) *Acceptable daily intake (ADI).* The ADI for total residues of diclazuril is 25 micrograms per kilogram of body weight per day.

(b) *Tolerances.* (1) Chickens: Tolerances are established for residues of parent diclazuril at 0.5 part per million (ppm) in muscle, 3 ppm in liver, and 1 ppm in skin/fat.

(2) [Reserved]

PART 558—NEW ANIMAL DRUGS FOR USE IN ANIMAL FEEDS

3. The authority citation for 21 CFR part 558 continues to read as follows:

Authority: 21 U.S.C. 360b, 371.

4. Section 558.198 is added to subpart B to read as follows:

§ 558.198 Diclazuril.

(a) *Approvals.* Type A medicated article: 0.2 percent of diclazuril to 000061 in § 510.600(c) of this chapter.

(b) *Related tolerances.* See § 556.175 of this chapter.

(c) [Reserved]

(d) *Conditions of use.* It is used in broiler chickens as follows:

(1) *Amount.* 1 part per million (ppm).

(2) *Indications for use.* For the prevention of coccidiosis caused by *Eimeria tenella, E. necatrix, E. acervulina, E. brunetti, E. mitis* (*mivati*), and *E. maxima*. Because diclazuril is effective against *E. maxima* later in its life cycle, subclinical intestinal lesions may be present for a short time after infection. Diclazuril was shown in studies to reduce lesion scores and

improve performance and health of birds challenged with *E. maxima*.

(3) *Limitations*. Feed continuously. Not for use in hens producing eggs for human food.

Dated: June 4, 1999.

Stephen F. Sundlof,

Director, Center for Veterinary Medicine.

[FR Doc. 99–16836 Filed 7–1–99; 8:45 am]

BILLING CODE 4160–01–F

DEPARTMENT OF HEALTH AND HUMAN SERVICES

Food and Drug Administration

21 CFR Part 1020

[Docket No. 98N–0877]

Medical Devices; Performance Standard for Diagnostic X–Ray Systems; Amendment

AGENCY: Food and Drug Administration, HHS.

ACTION: Final rule.

SUMMARY: The Food and Drug Administration (FDA) is issuing a final rule that amends the diagnostic x-ray systems performance standard for dental panoramic systems and mammography systems. This rule exempts panoramic dental x-ray units from the requirement that they be manufactured with exposure timers that automatically reset to zero upon premature termination of an exposure. Removing the automatic timer reset requirement will not compromise the quality of the radiographic image and will protect patients from being subject to unnecessary radiation due to repeat radiographs. This action also is intended to align the performance standard for mammography systems with the equipment requirements issued under the Mammography Quality Standards Act of 1992 (the MQSA).

EFFECTIVE DATE: September 30, 1999.

FOR FURTHER INFORMATION CONTACT: Richard V. Kaczmarek, Center for Devices and Radiological Health (HFZ–240), Food and Drug Administration, 1350 Piccard Dr., Rockville, MD 20850, 301–594–0865.

SUPPLEMENTARY INFORMATION:

I. Background

A. Panoramic Dental Radiograph

The requirements in § 1020.31 (21 CFR 1020.31) apply to diagnostic x-ray systems, including those used for dental radiography and mammography. Based on information from manufacturers, FDA had determined that the timer requirement in § 1020.31(a)(2)(i) should not apply to panoramic dental units. As a result of that determination, FDA exercised its enforcement discretion and did not apply the timer requirement to panoramic dental units. Some States had adopted local standards that were identical in language to FDA's regulation, but did not exempt panoramic dental units from the timer requirement because those units were not expressly exempted in the Federal regulation. Those States were applying the timer requirement to dental panoramic units. To correct this inconsistency, FDA has amended the regulations to expressly exempt panoramic dental units from the timer requirement in § 1020.31(a)(2)(i). This change should lead to consistency among government requirements.

B. Mammography X–Ray Devices

The recent passage of the MQSA (Pub. L. 102–539) and issuance of the interim and final MQSA regulations have focussed attention on the mammography equipment requirements contained in 21 CFR part 1020. Although the MQSA is directed to facility requirements for maintaining mammography quality, both the interim and the final MQSA regulations address x-ray equipment that is also subject to the performance standard for diagnostic x-ray systems (58 FR 67558 and 58 FR 67565, December 21, 1993; and 62 FR 55976, October 28, 1997). The MQSA and FDA's regulations governing mammography establish quality standards for facilities performing mammography to ensure safe, reliable, and accurate mammography nationwide. FDA wanted to ensure that the standards applying to radiation emitting electronic products, including mammography equipment, and those applying to the facilities that use such equipment were in accord. To bring the standards into harmony, FDA has amended its performance standard for diagnostic x-ray systems.

The MQSA standards also address the proper viewing of mammography films. The standard practice is that these films be read on view boxes (light boxes) with the ambient room light levels reduced. Unexposed film areas and parts of the light box not covered by exposed film should be masked to prevent the bright light surrounding the radiograph from interfering with reading the film.

Extending the x-ray field to expose the borders of the film simplifies the work of the radiologist and accreditation bodies because they have to create only one mask size, rather than having to create individualized masks for each facility. With the current practice being to irradiate the same area of the same sized film for all patients, there is little evidence that allowing the x-ray field to completely darken the film will significantly raise the radiation safety risk to the patient. FDA has amended the diagnostic x-ray systems standard to allow fixed aperture and variable aperture beam-limiting device (BLD) systems, to open up or adjust the field size to cover the entire film and thus reduce the need to provide a different mask for each film. In certain instances, limiting the x-ray field to the size of the breast may be considered to be advantageous. Practitioners still retain this option, which may result in improved imaging quality due to the reduction of scattered radiation.

To reduce unnecessary radiation exposure to the patient beyond the plane of the image receptor, FDA has requirements for x-ray field limitation and alignment. In the past, all systems in use for mammography had fixed aperture plates for x-ray field limitation. The advent of the variable aperture BLD for mammography is potentially a problem with respect to the primary barrier requirement if a BLD is opened so that the useful beam extends beyond the primary barrier provided by the image receptor support device. To prevent this problem, a variable aperture BLD must provide some restriction on the maximum field size to ensure that the entire useful beam at the plane of the image receptor is contained within the image receptor support device, which is also a primary barrier. In other words, for a fixed aperture or a variable aperture BLD with the collimator opened as wide as possible, the entire useful beam should not extend beyond the barrier, at any available source-image receptor distance (SID), except at the chest wall side, and the exposure level 5 centimeters beyond this barrier should not exceed 2.58×10^{-8} coulombs per kilogram (C/k) (0.1 milliroentgen (mR)) per exposure. This requirement is in agreement with the International Electrotechnical Commission (IEC) draft standard for mammography systems (IEC 62B/60601–2–45).

II. The Final Rule

FDA believes that the final rule establishes reasonable requirements that can be implemented by the regulated industry without unnecessary burden. None of the comments on the proposed rule requested that FDA revise any of the changes proposed.

A. Panoramic Dental Radiograph

The final rule exempts panoramic dental x-ray units from the requirement in § 1020.31(a)(2)(i) that they be

manufactured with exposure timers that automatically reset to zero upon premature termination of an exposure. This change incorporates into regulation current FDA policy and should lead to consistency among Federal, State, and local requirements.

B. Mammography X–Ray Devices

The MQSA requires that only x-ray equipment specifically designed for mammography can be used for mammography. Therefore, FDA has removed the reference in § 1020.31(f)(3), which allowed the use of general purpose x-ray equipment with special attachments for mammography. This change harmonizes this regulation with the MQSA equipment requirements.

Section 1020.31 permits the x-ray irradiation field at the plane of the image receptor to extend to the edges of the x-ray film. However, to protect the patient from unnecessary exposure to radiation, the mammographic field alignment requirement restricts the irradiation beam from extending beyond the edge of the receptor by no more than 2 percent of the SID. The limit on x-ray transmission through the primary barrier (except on the chest wall edge) remains unchanged. FDA has added the words ''for transmission'' to § 1020.31(m)(4) to further clarify the section.

The definition for ''image receptor support device'' replaces the definition of ''image receptor support'' and clarifies that image receptor support devices must provide a primary protective barrier for any orientation of the x-ray tube and the image receptor support device (except the chest wall side). This revision maintains the requirement in the current § 1020.31(m) that the image receptor support device must serve to provide a primary protective barrier that intercepts the useful beam. Equipment manufactured prior to the effective date of this rule has always been, and will continue to be, subject to the requirement that the primary barrier must intercept the useful beam.

Unlike fixed aperture systems, which meet the established primary barrier requirement, with variable aperture collimation there is the possibility that the dimensions of the x-ray beam may be adjusted to exceed the area of the image receptor. This requirement confines the x-ray beam to the dimensions of the primary barrier provided by the image receptor support device, except on the chest wall side.

FDA has clarified the requirement that patient exposures not be permitted without an appropriate primary barrier in place, by stating the requirement explicitly. FDA further clarifies the requirement by adding the word appropriate prior to primary barrier. FDA wants to clarify that it is not appropriate for a mammographic x-ray system to generate x-rays with an inappropriate image receptor support device in place. To reduce radiation exposure to the patient, the rule provides that the image receptor support device, acting as the primary barrier, must be in place before a mammographic x-ray system can generate x-rays. This requirement requires the image receptor support device be interlocked with the system so that an exposure cannot be made with the image receptor support device removed.

C. Effective Date

This rule will be effective in 90 days. Usually, amendments to performance standards for electronic products become effective 1 year after the date of publication of the final rule to allow sufficient time for manufacturers to implement the changes in design or production practices (21 U.S.C. 360kk(c)). In the proposed rule, FDA explained its good cause basis for proposing a shorter timeframe, namely that the amendments were codifying current industry practice, making regulatory requirements consistent, or relaxing requirements, and requested comments on the proposed shortening of the timeframe. No comments were received. Consequently, this rule becomes effective September 30, 1999.

III. The Proposed Rule

In the **Federal Register** of October 29, 1998 (63 FR 57957), FDA published a proposed rule to amend the performance standard for diagnostic x-ray systems (dental and mammographic systems requirements). The proposed rule contained the reasons for the proposed amendment, summarized the Technical Electronic Product Radiation Safety Standards Committee's recommendation regarding dental and mammographic systems, and delineated the statutory authority under which FDA issues this rule. The proposed rule also stated FDA's grounds showing good cause for prescribing an earlier effective date than 1 year after the date of publication of the final rule for these amendments to the performance standard and solicited specific comment on the timeframe for implementation of the final rule. Written comments were due January 27, 1999.

FDA received three comments, one each from a manufacturer, a professional society, and a State agency. All three comments supported the actions proposed in the rule. None of the comments commented on the timeframe for implementation of the final rule.

IV. Response to Comments

All three comments supported the actions proposed in the rule. One of the comments requested clarification concerning § 1020.31(m)(2), which would require that the x-ray tube shall not permit exposure unless the barrier is in place to intercept the useful beam. The concern was whether the manufacturer would be held responsible if an individual equipment owner chose to partially dismantle the system or bypass interlocks so that the x-ray tube could be operated with the primary barrier removed. The comment stated that such action would violate § 1020.30(q)(2), which prohibits the owner of the equipment from modifying the equipment such that it would no longer comply with § 1020.31. In such a case, the comment argued that FDA should cite the owner, not the manufacturer, for noncompliance.

FDA agrees that a manufacturer should not be held responsible should an owner circumvent the interlocks to operate the system with the primary barrier removed. The regulation does not require the manufacturer to design an interlock that cannot be defeated. A modification by the owner that makes the unit noncompliant with §§ 1020.31(m)(2) and 1020.30(q) may cause the device to be misbranded and adulterated. FDA could bring an action against the person who caused the misbranding and adulteration and also seek to enjoin use of the device.

None of the comments include any recommendations on the timeframe for implementation of the final rule or suggest that FDA does not have good cause for shortening the customary 1-year period. FDA believes that unneeded delay in the implementation of these amendments could lead to difficulties for mammography facilities because of confusion over the requirements of the x-ray performance standard and standards issued under the MQSA. In addition, because the amendments clarify a provision of the Federal standard, FDA believes it is in the best interests of patients, facilities, and manufacturers to implement the dental x-ray equipment amendment expeditiously. For these reasons, the effective date of the final rule will be 90 days after date of publication in the **Federal Register**.

V. Environmental Impact

The agency has determined under 21 CFR 25.30(a) and (i) and 25.34(c) that

this action is of a type that does not individually or cumulatively have a significant effect on the human environment. Therefore, neither an environmental assessment nor an environmental impact statement is required.

VI. Analysis of Impacts

FDA has examined the impact of this final rule under Executive Order 12866 and the Regulatory Flexibility Act (5 U.S.C. 601–612) (as amended by subtitle D of the Small Business Regulatory Fairness Act of 1996 (Pub. L. 104–121)), and the Unfunded Mandates Reform Act of 1995 (Pub. L. 104–4). Executive Order 12866 directs agencies to assess all costs and benefits of available regulatory alternatives and, when regulation is necessary, to select regulatory approaches that maximize net benefits (including potential economic, environmental, public health and safety, and other advantages; distributive impacts; and equity). The agency believes this final rule is consistent with the regulatory philosophy and principles identified in the Executive Order. In addition, the final rule is not a significant regulatory action as defined by the Executive Order and therefore is not subject to review under the Executive Order.

The Regulatory Flexibility Act requires agencies to analyze regulatory options that would minimize any significant impact of a rule on small entities. Because this final rule increases the flexibility of the performance standard and codifies current interpretations of Federal regulations in order to prevent inconsistent interpretations by State and local governments, and because none of the domestic manufacturers of panoramic dental units or mammography x-ray systems would be considered small entities, the agency certifies that the final rule will not have a significant economic impact on a substantial number of small entities engaged in manufacturing. Because dental and mammography facilities will buy machines with the changes to the performance standard allowed in this final rule only if it is economically advantageous to do so, the agency certifies that the final rule will not have a significant economic impact on a substantial number of small entities that are facilities (most, if not all, of which would be considered small entities). Therefore, under the Regulatory Flexibility Act, no further analysis is required.

In the proposed rule, FDA conducted and published an initial regulatory flexibility analysis to ensure that impacts on small entities were assessed and to alert any potentially impacted entities to the opportunity to submit comments to this agency. No comments on the initial regulatory flexibility analysis were submitted. This final rule will not impose costs of $100 million or more in either the private sector or State, local, and tribal governments in the aggregate. Consequently, a summary statement of analysis under section 202(a) of the Unfunded Mandates Reform Act of 1995 is not required.

In part, the final rule codifies the equipment performance standards established under the MQSA by requiring only x-ray systems designed specifically for mammography be marketed for mammography. This rule updates the x-ray performance standard to reflect a standard already enforced under the MQSA. Consequently, FDA expects no economic impact from this portion of the final rule.

The final rule also permits the x-ray irradiation field to extend to the edges of the x-ray film but not beyond the primary barrier provided by the image receptor support device. It further changes the definition of an image receptor support device, clarifying that it must provide a primary protective barrier and that exposures not be possible without the image receptor support device being in place, acting as the primary barrier. Exposing all of the film allows one size of film mask to be used for proper viewing of mammography films using light boxes and prohibiting extension of the beam beyond the primary barrier protects the patient from unnecessary exposure to radiation. The amendment to relax the field edge alignment criteria will not require any changes to x-ray mammography systems that are currently compliant; these systems will remain compliant after the effective date. The amendment will, however, allow the user to modify or purchase a collimator that has the ability to provide films without light borders as a convenience in simplifying viewing conditions. FDA believes that most of the image receptor support devices that are currently in use meet the requirements in the amendments to §§ 1020.30(b) and 1020.31(m). In addition, when the manufacturer's design of the cassette holder provides the primary barrier attenuation itself, then the cassette holder is considered a part of the image receptor support device. Therefore, FDA estimates that the amendments to §§ 1020.30(b) and 1020.31(m) will impose minimal new costs. This rule also allows more flexibility for mammography facilities and accreditation bodies without compromising the public health and may reduce costs to mammography facilities and accreditation bodies by simplifying the masking of images.

The final rule exempts panoramic x-ray dental units from the requirement that they be manufactured with exposure timers that automatically reset to zero or the initial setting upon premature termination of an exposure. For panoramic dental exposures, interrupting the exposure does not affect the quality of images already taken. Consequently, restarting the exposure at the initial starting point exposes patients to unnecessary radiation. This rule removes a regulatory requirement, while still protecting the public health, and may reduce costs to dental facilities and patients. FDA has identified no new reporting, recordkeeping, or other compliance requirements associated with this rule.

The Safe Medical Devices Act of 1990 (Pub. L. 101–629) enacted on November 28, 1990, transferred the provisions of the Radiation Control for Health and Safety Act of 1968 (Pub. L. 90–602) from Title III of the Public Health Service Act (42 U.S.C. 201 *et seq.*) to Chapter V of the Federal Food, Drug, and Cosmetic Act (21 U.S.C. 201 *et seq.*). These provisions regulate electronic products that emit radiation. On October 27, 1992, the MQSA was enacted to establish uniform, national quality standards for mammography. The MQSA (42 U.S.C. 263b(f)(1)(B)) requires the use of radiological equipment specifically designed for mammography to be used for mammography. Similarly, 21 CFR 900.12(b)(1) of the interim and final mammography regulations prohibits the use of conventional radiographic equipment for mammography.

There are approximately 10,000 mammography facilities in the United States. Because this change in the performance standard only applies to components manufactured after the effective date of the final rule, the associated cost does not apply to those machines manufactured prior to that date. FDA estimates that approximately 10 percent of facilities replace their mammography machines in any one year. At this time, FDA is unable to estimate the demand for the modifications to systems currently in use. As discussed previously, the change concerning x-ray beam collimation is less restrictive than the present standard. FDA estimates the cost per system to be between $0 and $5,000, if the system modification is made during production.

There are approximately 138,500 dental facilities in the United States of

which 40 percent provide access to panoramic dental x-ray units. An uncertain number of these facilities may request the manufacturer to remove the automatic reset of the exposure timer on their panoramic machines; however, they are not required to do so. FDA believes that the facility will only make this change if it is economically or clinically advantageous to do so. FDA estimates it will cost a facility an amount equal to what would be assessed for a routine service call (approximately $150.00 or less) to remove the automatic reset function for premature termination of an exposure for existing systems. FDA believes that manufacturers no longer manufacture panoramic dental x-ray units with automatic reset exposure times.

Most, if not all, of the mammography facilities and dental facilities would be considered small under the criteria establishment by the Small Business Administration. FDA's registration system shows five manufacturers of panoramic dental units. Of the domestic manufacturers, none would be considered small entities. There are approximately 10 manufacturers of mammography x-ray systems. Of these manufacturers, none would be considered small entities.

For the mandatory changes to image receptor support devices, FDA believes that most of the image receptor support devices that are currently in use provide a primary barrier that is capable of meeting the requirements in the amendments to §§ 1020.30(b) and 1020.31(m). There are approximately 10,000 mammography facilities in the United States. Because this change in the performance standard only applies to systems manufactured after the effective date of a final rule, the costs associated with any changes that may need to be made, would not apply to those machines manufactured prior to that date. FDA estimates that approximately 10 percent of facilities replace their mammography systems in any one year (10 percent of 10,000 = 1,000). FDA estimates the cost per system to be between $0 and $2,000 in the event that any manufacturers are required to implement design or production changes to ensure that exposures not be permitted on their systems without a primary barrier being in place. FDA estimates approximately 95 percent of systems currently being marketed already meet this requirement. With an annual mammography system replacement rate of 10 percent (i.e., 1,000 new systems purchased per year), FDA estimates only approximately 5 percent of these 1,000 systems may increase the cost to meet the requirement. To calculate the annual cost, FDA estimates a cost of $0 to $2,000 per system multiplied by 50 systems (5 percent of 1,000 = 50). Using this estimate, the costs are expected to be approximately $0 to $100,000.

Under these changes to the performance standard, FDA allows manufacturers and facilities to decide whether to implement any device modifications in response to the greater flexibility in these mammography collimation requirements. If the benefits associated with the flexibility in this rulemaking are outweighed by the costs to the facility, the facility can choose to not purchase a device that has been modified in response to the greater flexibility in this rulemaking. With regard to the mandatory change, FDA believes that the great majority of the image receptor support devices that are currently being manufactured provide a primary barrier that is capable of meeting the requirements in the amendment to § 1020.31(m). Therefore, FDA does not anticipate that the amendment to § 1020.31(m) will impose any significant costs.

Because most of these changes to the mammography performance standard and the change to the timer requirement for panoramic dental systems do not increase regulatory burdens, FDA considered no alternatives to accomplish the stated objectives of the applicable statutes. For the primary barrier standard in § 1020.31(m), FDA considered not requiring the primary barrier to be in place to intercept the useful beam. This alternative was rejected because without the primary barrier in place, patients would be exposed to unnecessary radiation.

VII. Paperwork Reduction Act of 1995

This final rule contains no collections of information. Therefore, clearance by the Office of Management and Budget under the Paperwork Reduction Act of 1995 is not required.

List of Subjects in 21 CFR Part 1020

Electronic products, Medical devices, Radiation protection, Reporting and recordkeeping requirements, Television, X-rays.

Therefore, under the Federal Food, Drug, and Cosmetic Act and under authority delegated to the Commissioner of Food and Drugs, 21 CFR part 1020 is amended as follows:

PART 1020—PERFORMANCE STANDARDS FOR IONIZING RADIATION EMITTING PRODUCTS

1. The authority citation for 21 CFR part 1020 continues to read as follows:

Authority: 21 U.S.C. 351, 352, 360e–360j, 360gg–360ss, 371, 381.

2. Section 1020.30 is amended in paragraph (b) by removing the definition of ''image receptor support'' and adding a new definition in alphabetical order to read as follows:

§ 1020.30 Diagnostic x-ray systems and their major components.

* * * * *

(b) * * *

Image receptor support device means, for mammography x-ray systems, that part of the system designed to support the image receptor during a mammographic examination and to provide a primary protective barrier.

* * * * *

3. Section 1020.31 is amended by revising paragraphs (a)(2)(i), (f)(3), and (m) to read as follows:

§ 1020.31 Radiographic equipment.

* * * * *

(a) * * *

(2) * * *

(i) Except during serial radiography, the operator shall be able to terminate the exposure at any time during an exposure of greater than one-half second. Except during panoramic dental radiography, termination of exposure shall cause automatic resetting of the timer to its initial setting or to zero. It shall not be possible to make an exposure when the timer is set to a zero or off position if either position is provided.

* * * * *

(f) * * *

(3) *Systems designed for mammography*. (i) Mammographic beam-limiting devices manufactured after September 30, 1999, shall be provided with means to limit the useful beam such that the x-ray field at the plane of the image receptor does not extend beyond any edge of the image receptor by more than 2 percent of the SID. This requirement can be met with a system that performs as prescribed in paragraphs (f)(4)(i), (f)(4)(ii), and (f)(4)(iii) of this section. For systems that allow changes in the SID, the SID indication specified in paragraphs (f)(4)(ii) and (f)(4)(iii) of this section shall be the maximum SID for which the beam-limiting device or aperture is designed.

(ii) Each image receptor support device intended for installation on a system designed for mammography shall have clear and permanent markings to indicate the maximum image receptor size for which it is designed.

* * * * *

(m) *Primary protective barrier for mammography x-ray systems.* For mammography x-ray systems manufactured after September 30, 1999:

(1) At any SID where exposures can be made, the image receptor support device shall provide a primary protective barrier that intercepts the cross section of the useful beam along every direction except at the chest wall edge.

(2) The x-ray tube shall not permit exposure unless the appropriate barrier is in place to intercept the useful beam as required in paragraph (m)(1) of this section.

(3) The transmission of the useful beam through the primary protective barrier shall be limited such that the exposure 5 centimeters from any accessible surface beyond the plane of the primary protective barrier does not exceed $2.58X10^{-8}$ C/kg (0.1 mR) for each activation of the tube.

(4) Compliance for transmission shall be determined with the x-ray system operated at the minimum SID for which it is designed, at the maximum rated peak tube potential, at the maximum rated product of x-ray tube current and exposure time (mAs) for the maximum rated peak tube potential, and by measurements averaged over an area of 100 square centimeters with no linear dimension greater than 20 centimeters. The sensitive volume of the radiation measuring instrument shall not be positioned beyond the edge of the primary protective barrier along the chest wall side.

Dated: June 16, 1999.

Margaret M. Dotzel,

Acting Associate Commissioner for Policy Coordination.

[FR Doc. 99–16835 Filed 7–1–99; 8:45 am]

BILLING CODE 4160–01–F

DEPARTMENT OF JUSTICE

Drug Enforcement Administration

21 CFR Parts 1308, 1312

[DEA–180F]

Schedules of Controlled Substances: Rescheduling of the Food and Drug Administration Approved Product Containing Synthetic Dronabinol [(-)-Δ^9-(trans)-Tetrahydrocannabinol] in Sesame Oil and Encapsulated in Soft Gelatin Capsules From Schedule II to Schedule III

AGENCY: Drug Enforcement Administration, Department of Justice.

ACTION: Final rule.

SUMMARY: This is a final rule of the Deputy Administrator of the Drug Enforcement Administration (DEA) transferring a drug between schedules of the Controlled Substances Act (CSA) pursuant to 21 U.S.C. 811. With the issuance of this final rule, the Deputy Administrator transfers from schedule II to schedule III of the CSA the drug containing synthetic dronabinol [(-)-Δ^9-(*trans*)-tetrahydrocannabinol] in sesame oil and encapsulated in soft gelatin capsules in a product approved by the Food and Drug Administration (FDA). This rule also designates this drug as a schedule III non-narcotic substance requiring an import/export permit. As a result of this rule, the regulatory controls and criminal sanctions of schedule III will be applicable to the manufacture, distribution, importation and exportation of this drug.

EFFECTIVE DATE: July 2, 1999.

FOR FURTHER INFORMATION CONTACT: Frank Sapienza, Chief, Drug and Chemical Evaluation Section, Drug Enforcement Administration, Washington, DC 20537, 202–307–7183.

SUPPLEMENTARY INFORMATION:

Background

Dronabinol is the United States Adopted Name (USAN) for the (-)-isomer of Δ^9-(*trans*)-tetrahydrocannabinol [(-)-Δ^9-(*trans*)-THC], which is believed to be the major psychoactive component of *Cannibas sativa L.* (marijuana). On May 31, 1985, FDA approved for marketing the product Marinol®—which contains synthetic dronabinol in sesame oil and encapsulated in soft gelatin capsules—for the treatment of nausea and vomiting associated with cancer chemotherapy. Following this FDA approval, DEA issued a final rule on May 13, 1986, transferring FDA-approved products of the same formulation as Marinol® from schedule I to schedule II of the CSA in accordance with 21 U.S.C. 811(a). (For simplicity within this document, the term ''Marinol®'' will be used hereafter to refer to Marinol® and any other products, which may by approved by FDA in the future, that have the same formulation as Marinol®.) The 1986 rescheduling of Marinol® was based on a medical and scientific evaluation and scheduling recommendation from the Assistant Secretary for Health in accordance with 21 U.S.C. 811(b). The transfer of Marinol® to schedule II did not affect the CSA classification of pure dronabinol, which—as a tetrahydrocannabinol with no currently accepted medical use in treatment in the United States—remains a schedule I controlled substance. On December 22, 1992, FDA expanded Marinol®'s indications to include the treatment of anorexia associated with weight loss in patients with AIDS.

The Petition To Reschedule Marinol®

On February 3, 1995, UNIMED Pharmaceuticals, Inc. petitioned the Administrator of DEA to transfer Marinol® from schedule II to schedule III. In response to this petition, and in view of supplemental information that UNIMED provided to DEA on December 11, 1996, DEA had to determine whether this proposed rescheduling of Marinol® would comport with United States obligations under the Convention on Psychotropic Substances, 1971 (Psychotropic Convention). See 21 U.S.C. 811(d). Under the Psychotropic Convention, dronabinol and all dronabinol-containing products, such as Marinol®, are listed in schedule II. As a result, the United States is obligated under the Psychotropic Convention to impose certain restrictions on the export and import of Marinol®. DEA has concluded that, in order for the United States to continue to meet its obligations under the Psychotropic Convention, DEA will continue to require import and export permits for international transactions involving Marinol®, even though Marinol® will be transferred to schedule III of the CSA. (As set forth below, to accomplish this, DEA is hereby amending 21 CFR 1312.30 to require import and export permits for international transactions involving Marinol®.)

After determining that Marinol® could be transferred to schedule III while maintaining the controls required by the Psychotropic Convention, and after gathering the necessary data, on August 7, 1997, DEA requested from the Acting Assistant Secretary for Health, Department of Health and Human Services (DHHS), a scientific and medical evaluation, and recommendation, as to whether Marinol® should be rescheduled, in accordance with 21 U.S.C. 811(b).

On September 11, 1998, the Acting Assistant Secretary for Health sent to DEA a letter recommending that Marinol® be transferred from schedule II to schedule III of the CSA. Enclosed with the September 11, 1998, letter was a document prepared by the FDA entitled ''Basis for the Recommendation for Rescheduling Marinol® Capsules from schedule II to schedule III of the Controlled Substances Act (CSA).'' In this document, the FDA defines the Marinol® product as ''an FDA-approved drug product containing synthetically produced dronabinol dissolved in sesame oil and encapsulated in soft

gelatin capsules (2.5 mg, 5 mg, and 10 mg per dosage unit).'' The document contained a review of the factors which the CSA requires the Secretary to consider, which are set forth in 21 U.S.C. 811(c).

The Proposed Rule

On November 7, 1998, the then-Acting Deputy Administrator of DEA published a notice of proposed rule making in the **Federal Register** (63 FR 59751), proposing to transfer Marinol® from schedule II to schedule III of the CSA. The proposed rule was based on the DHHS scientific and medical evaluation and scheduling recommendation and DEA's independent evaluation. Also under the proposed rule, 21 CFR 1312.30 would be amended to include Marinol® as a schedule III non-narcotic controlled substance specifically designated as requiring import and export permits pursuant to 21 U.S.C. 952(b)(2) and 953(e)(3). As discussed above, this proposed amendment to 21 CFR 1312.30 is necessary for the United States to continue to meet its obligations under the Psychotropic Convention. The notice of proposed rule provided an opportunity for all interested persons to submit their comments, objections, or requests for hearing in writing to DEA on or before December 7, 1998.

Comments From the Public

DEA received comments regarding the proposed rule from ten persons. Nine of the commenters supported the proposed rule. One commenter objected to the proposed rule and requested a hearing thereon. The comments are briefly summarized below.

The nine commenters who supported the proposed rule included organizations, physicians, and one individual. Eight of the nine commenters who supported the proposed rule expressed the opinion that Marinol® is a safe and effective alternative to smoking marijuana for treatment of nausea and loss of appetite and has low abuse potential.

One commenter who supported the proposed rule expressed the view that the rescheduling of Marinol® should not serve as a substitute for making marijuana legally available for medical use. This commenter stated that it supported the use of marijuana for medical purposes and, therefore, wished to emphasize that the proposed rule affected the CSA status of Marinol®—not that of marijuana, which remains a schedule I controlled substance.

The one commenter who objected to the proposed rule, and requested a hearing thereon, asserted that Marinol® should not be transferred to schedule III unless and until marijuana and all other THC-containing drugs are simultaneously and likewise rescheduled. This commenter asserted that Marinol® has the same potential for abuse as marijuana and all other THC-containing drugs. This commenter agreed with the proposed rule that Marinol®'s potential for abuse is less than the ''high potential for abuse'' commensurate with schedules I and II of the CSA. Accordingly, this commenter agreed that Marinol® should be transferred to a less restrictive schedule than schedule II. However, this commenter disagreed with what would be the resultant status of Marinol® vis-á-vis marijuana and THC if the NPRM becomes final: Marinol® would be in schedule III while marijuana and THC would remain in schedule I. This commenter asserted that the CSA prohibited transferring Marinol® to a less restrictive schedule unless marijuana and all THC-containing drugs are simultaneously transferred to the same schedule. DEA has determined that this commenter's objections are based on a misinterpretation of the CSA, which can be addressed, as a matter of law, without conducting a fact-finding hearing. Accordingly, as this commenter presented no material issues of fact, DEA denied this commenter's request for a hearing.

Findings

Relying on the scientific and medical evaluation and scheduling recommendations of the Assistant Secretary for Health, and based on DEA's independent review thereof, the Deputy Administrator of the DEA, pursuant to 21 U.S.C. 811(a) and 811(b), finds that:

(1) Based on information now available, Marinol® has a potential for abuse less than the drugs or other substances in schedules I and II.

(2) Marinol® is a FDA-approved drug product and has a currently accepted medical use in treatment in the United States; and

(3) Abuse of Marinol® may lead to moderate of low physical dependence or high psychological dependence.

Rescheduling Action

Based on the above findings, the Deputy Administrator of the DEA concludes that Marinol® should be transferred from schedule II to schedule III. Schedule III regulations will, among other things, allow five prescription refills in six months and lessen record keeping requirements and distribution restrictions. The schedule III control of Marinol® will become effective July 2, 1999, except that certain regulatory provisions governing registrants who handle Marinol will take effect as indicated below. In the event that the regulations impose special hardships on the registrants, the DEA will entertain any justified request for an extension of time to comply with the schedule III regulations regarding Marinol®. The applicable regulations are as follows.

1. *Registration.* Any person who manufactures, distributes, dispenses, imports or exports Marinol® or who engages in research or conducts instructional activities with Marinol®, or who proposes to engage in such activities, must be registered to conduct such activities in accordance with part 1301 of Title 21 of the Code of Federal Regulations.

2. *Security.* Marinol® must be manufactured, distributed and stored in accordance with §§ 1301.71, 1301.72(b), (c), and (d), 1301.73, 1301.74, 1301.75(b) and (c) and 1301.76 of Title 21 of the Code of Federal Regulations.

3. *Labeling and Packaging.* All commercial containers of Marinol®, which are packaged on or after January 3, 2000 must have the appropriate Schedule III labeling as required by §§ 1302.03–1302.07 of Title 21 of the Code of Federal Regulations. Commercial containers of Marinol® packaged before January 3, 2000. After April 3, 2000, all commercial containers of Marinol must bear the CIII labels as specified in §§ 1302.03–1302.07 of Title 21 of the Code of Federal Regulations.

4. *Inventory.* Registrants possessing Marinol® are required to take inventories pursuant to §§ 1304.03, 1304.04 and 1304.11 of Title 21 of the Code of Federal Regulations.

5. *Records.* All registrants must keep records pursuant to §§ 1304.03, 1304.04 and 1304.21–1304.23 of Title 21 of the Code of Federal Regulations.

6. *Prescriptions.* All prescriptions for Marinol® are to be issued pursuant to §§ 1306.03–1306.06 and 1306.21–1306.26 of Title 21 of the Code of Federal Regulations. All prescriptions for Marinol® issued on or after July 2, 1999, if authorized for refilling, shall as of that date be limited to five refills and shall not be refilled after January 2, 2000.

7. *Importation and Exportation.* Due to its international control status, import and export permits for Marinol® will be required in accordance with 21 CFR 1312.30. All importation and exportation of Marinol® shall be in compliance with part 1312 of Title 21 of the CFR.

8. *Criminal Liability.* Any activity with Marinol® not authorized by, or in violation of, the CSA or the Controlled

Substances Import and Export Act shall continue to be unlawful.

In accordance with the provisions of the CSA (21 U.S.C. 811(a)), this action is a formal rule making ''on the record after opportunity for a hearing.'' Such proceedings are conducted pursuant to the provisions of 5 U.S.C. 556 and 557 and, as such, are exempt from review by the Office of Management and Budget pursuant to Executive Order (E.O.) 12866, section 3(d)(1). The Deputy Administrator, in accordance with the Regulatory Flexibility Act (5 U.S.C. 605(b)), has reviewed this final rule and by approving it certifies that it will not have a significant economic impact on a substantial number of small entities. Marinol® is a prescription drug used to treat nausea due to cancer chemotherapy and AIDS wasting. Handlers of Marinol® are likely to handle other controlled substances used to treat cancer or AIDS which are already subject to the regulatory requirements of the CSA. Further, placement of Marinol® in schedule III of the CSA will mean a significant decrease in the regulatory requirements for persons handling Marinol®.

This rule will not result in the expenditure by State, local and tribal governments, in the aggregate, or by the private sector, of $100,000,000 or more in any one year, and it will not significantly or uniquely affect small governments. Therefore, no actions were deemed necessary under provisions of the Unfunded Mandates Reform Act of 1995.

This rule is not a major rule as defined by section 804 of the Small Business Regulatory Enforcement Fairness Act of 1996. This rule will not result in an annual effect on the economy of $100,000,000 or more; a major increase in costs or prices; or significant adverse effects on competition, employment, investment, productivity, innovation, or on the ability of United States-based companies to compete with foreign-based companies in domestic and export markets.

This rule will not have substantial direct effects on the States, on the relationship between the national government and the States, or on the distribution of power and responsibilities among the various levels of government. Therefore, in accordance with E.O. 12612, it is determined that this rule, if finalized, will not have sufficient federalism implications to warrant the preparation of a Federalism Assessment.

List of Subjects

21 CFR Part 1308

Administrative practice and procedure, Drug traffic control, Narcotics, Prescription drugs.

21 CFR Part 1312

Administrative practice and procedure, Drug traffic control, Exports, Imports, Narcotics, Reporting requirements.

Under the authority vested in the Attorney General by section 201(a) of the CSA (21 U.S.C. 811(a)), and delegated to the Administrator of the DEA by the Department of Justice regulations (28 CFR 0.100) and redelegated to the Deputy Administrator pursuant to 28 CFR 0.104, the Deputy Administrator hereby amends 21 CFR parts 1308 and 1312 as follows:

PART 1308—[AMENDED]

1. The authority citation for 21 CFR part 1308 continues to read as follows:

Authority: 21 U.S.C. 811, 812, 871(b) unless otherwise noted.

§ 1308.12 [Amended]

2. Section 1308.12 is amended by removing paragraph (f)(1) and redesignating the existing paragraph (f)(2) as (f)(1).

3. Section 1308.13 is amended by adding a new paragraph (g) to read as follows:

§ 1308.13 Schedule III.

* * * * *

(g) *Hallucinogenic substances.*

(1) Dronabinol (synthetic) in sesame oil and encapsulated in a soft gelatin capsule in a U.S. Food and Drug Administration approved product—7369.

[Some other names for dronabinol: (6a*R*-*trans*)-6a,7,8,10a-tetrahydro-6,6,9-trimethyl-3-pentyl-6*H*-dibenzo [*b*,*d*]pyran-1-ol] or (-)-delta-9-(*trans*)-tetrahydrocannabinol]

(2) [Reserved]

PART 1312—[AMENDED]

1. The authority citation for part 1312 continues to read as follows:

Authority: 21 U.S.C. 952, 953, 954, 957, 958.

2. Section 1312.30 is amended by adding a new paragraph (a) and reserving paragraph (b) to read as follows:

§ 1312.30 Schedule III, IV and V non-narcotic controlled substances requiring an import and export permit.

* * * * *

(a) Dronabinol (synthetic) in sesame oil and encapsulated in a soft gelatin capsule in a U.S. Food and Drug Administration approved product.

(b) [Reserved]

Dated: June 28, 1999.

Donnie R. Marshall,

Deputy Administrator, Drug Enforcement Administration.

[FR Doc. 99–16833 Filed 7–1–99; 8:45 am]

BILLING CODE 4410–09–M

ENVIRONMENTAL PROTECTION AGENCY

40 CFR Part 52

[LA–29–1–7403; FRL–6370–8]

Approval and Promulgation of Air Quality Implementation Plans; Louisiana: Reasonable-Further-Progress Plan for the 1996–1999 Period, Attainment Demonstration, Contingency Plan, Motor Vehicle Emission Budgets, and 1990 Emission Inventory for the Baton Rouge Ozone Nonattainment Area; Louisiana Point Source Banking Regulations

AGENCY: Environmental Protection Agency (EPA).

ACTION: Final rule.

SUMMARY: In this action, the EPA is finalizing its approval of revisions to the Louisiana State Implementation Plan (SIP) for the Baton Rouge ozone nonattainment area. These revisions were submitted by the State of Louisiana for the purpose of satisfying the Post-1996 Rate-of-Progress (ROP), Attainment Demonstration, and Contingency Plan requirements of the Federal Clean Air Act (the Act), which will aid in ensuring the attainment of the National Ambient Air Quality Standard (NAAQS) for ozone. The EPA is also approving the associated 1999 Motor Vehicle Emissions Budgets (MVEBs) for the area.

The EPA is also taking final action to approve additional SIP revisions submitted by Louisiana including codifying revisions that were made to the 1990 base year emission inventory and submitted to the EPA as part of the Baton Rouge 15% Rate-of-Progress Plan approved on October 22, 1996. Furthermore, the EPA is approving additional revisions to the 1990 base year emissions inventory submitted as part of the Post-1996 ROP Plan. The EPA is also approving the State's point source banking regulations. This rulemaking action is being taken under sections 110, 301, and part D of the Act.

EFFECTIVE DATE: This action is effective on August 2, 1999.

ADDRESSES: Information relevant to this rulemaking is available for viewing during normal business hours at the following locations. Persons interested in examining these documents should make an appointment with the appropriate office at least 24 hours before the visiting day.

Environmental Protection Agency, Region 6, Air Planning Section (6PD–L), 1445 Ross Avenue, Suite 700, Dallas, Texas 70202–2733. Louisiana Department of Environmental Quality, Office of Air Quality and Radiation Protection, H.B. Garlock Building, 7290 Bluebonnet Boulevard, Baton Rouge, Louisiana 70810.

FOR FURTHER INFORMATION CONTACT: Ms. Jeanne Schulze, Air Planning Section (6PD–L), Environmental Protection Agency, Region 6, 1445 Ross Avenue, Dallas, Texas 75202–2733, telephone (214) 665–7254.

SUPPLEMENTARY INFORMATION:

Table of Contents

I. Background
A. Summary of Today's Action
B. Clean Air Act Requirements
1. Reasonable Further Progress (RFP) Requirements
2. Contingency Measures Requirements
3. Motor Vehicle Emissions Budgets
4. Attainment Demonstration Requirements
C. Related SIP Approvals
D. Current SIP Submittals
II. Analysis of the Submittals
A. Post-1996 Rate-of-Progress Plan
1. Introduction
2. Base Year Emissions Inventory
3. Adjusted Base Year Inventory
4. Required Rate-of-Progress Reductions
5. Fleet Turnover Correction Term
6. Calculation of Target Level of Emissions
7. Growth Calculations
a. Introduction
b. EPA Action
8. Total Required Reductions
9. Measures to Achieve the Required Reductions
a. Introduction
b. EPA Action
B. Motor Vehicle Emission Budgets
1. Introduction
2. EPA Action
C. Contingency Measures
1. Introduction
2. Point Source Emissions Banking
3. EPA Action
D. Additional Rule Submitted
E. Attainment Demonstration
1. Introduction
2. EPA Action
a. Episode Selection and Base Case Performance
b. Attainment Test
c. Photochemical Grid Model Used
d. Demonstration of Attainment
e. Modeling Evaluation
f. Control Strategy Evaluation
III. Final Rulemaking Action
IV. Administrative Requirements
A. Executive Order 12866
B. Executive Order 12875
C. Executive Order 13045
D. Executive Order 13084
E. Regulatory Flexibility Act
F. Unfunded Mandates
G. Submission to Congress and the Comptroller General
H. Petition for Judicial Review

I. Background

A. Summary of Today's Action

The EPA is finalizing approval of revisions to the SIP for the Baton Rouge ozone nonattainment area including the Post-1996 ROP Plan, Attainment Demonstration, and Contingency Plan. In addition, the EPA is approving the associated 1999 MVEBs, revisions to the 1990 base year emission inventory, and the Louisiana Point Source Banking Regulations.

The EPA proposed approval of these SIP revisions on August 18, 1998 (63 FR 44192). The public comment period on the proposed rulemaking ended on October 19, 1998. The EPA received no public comments on its proposal. Accordingly, in today's rulemaking, the EPA is taking final approval action to approve these revisions, which are summarized in the following discussion. For more details on these SIP submittals, relevant Clean Air Act requirements, etc., please refer to the EPA's proposed rulemaking action.

B. Clean Air Act Requirements

1. Reasonable Further Progress (RFP) Requirements

Section 182(c)(2)(B) of the Act requires each State having one or more ozone nonattainment areas classified as serious or worse to develop a plan by November 15, 1994, that provides for additional actual volatile organic compound (VOC) reductions of at least three percent per year, averaged over each consecutive three year period, beginning six years after enactment of the Act, until such time as these areas have attained the NAAQS for ozone. These plans are referred to hereafter as Post-1996 ROP Plans. These plans were due to be submitted to the EPA as a SIP revision by November 15, 1994.

Section 182(b)(1) of the Act mandates a 15 percent VOC emission reduction, net of growth, between 1990 and 1996 for each State having one or more ozone nonattainment areas classified as moderate or worse. That SIP revision was due to the EPA by November 15, 1993. The plan for these reductions occurring between 1990–1996 is hereafter referred to as the 15% ROP Plan.

Sections 182(b)(1)(C), 182(b)(1)(D) and 182(c)(2)(B) of the Act limit the creditability of certain control measures toward the ROP requirements. Specifically, States cannot take credit for reductions achieved by Federal Motor Vehicle Control Program (FMVCP) measures (e.g., new car emissions standards) promulgated prior to 1990, or for reductions stemming from regulations promulgated prior to 1990 to lower the volatility (i.e., Reid Vapor Pressure (RVP)) of gasoline. Furthermore, the Act does not allow credit towards ROP requirements for post-1990 corrections to existing motor vehicle Inspection and Maintenance (I/M) Programs or corrections to Reasonably Available Control Technology (RACT) rules, since these programs were required to be in place prior to 1990. Emissions and emissions reductions shall be calculated on a typical weekday basis for the ''peak'' 3-month ozone period (generally June through August).

2. Contingency Measures Requirements

Sections 172(c)(9) and 182(c)(9) of the Act require contingency measures to be included in the ROP and attainment plans. These measures are required to be implemented immediately if reasonable further progress has not been achieved, or if the NAAQS is not met by the deadline set forth in the Act.

3. Motor Vehicle Emissions Budgets

Section 176(c) of the Act, and 40 CFR 51.452(b) of the Federal Transportation Conformity Rule require States to establish motor vehicle emissions budgets in any control strategy SIP that is submitted for attainment and maintenance of the NAAQS.

4. Attainment Demonstration Requirements

Under section 182(c)(2)(A) of the Act, States required to submit Post-1996 ROP Plans, by November 15, 1994, for serious or worse ozone nonattaiment areas, must also submit for those areas an attainment demonstration to provide for achievement of the ozone NAAQS by the statutory deadline. This demonstration is to be based on photochemical grid modeling, such as the Urban Airshed Model (UAM), or an equivalent analytical method. The reader is referred to the proposal for a discussion of the relevant EPA memoranda on attainment demonstration submissions.

The Baton Rouge ozone nonattainment area is classified as ''serious'' and is subject to the section 182(b)(1) 15% ROP requirements, section 182(c)(2)(B) Post-1996 ROP requirements, and section 182(c)(2)(A) attainment demonstration requirements. The Baton Rouge ozone nonattainment

area is comprised of the following parishes: East Baton Rouge, West Baton Rouge, Ascension, Livingston, and Iberville. As a serious ozone nonattainment area, Baton Rouge has a statutory attainment date of November 15, 1999. Therefore, the area's Post-1996 ROP requirement is to achieve an overall 9 percent reduction in actual VOCs (net of growth) during the period 1996–1999 pursuant to section 182(c)(2)(B) of the Act.

C. Related SIP Approvals

As stated previously, section 182(b)(1) of the Act requires that moderate and above ozone nonattainment areas reduce their 1990 emissions of VOCs by 15 percent (net of growth) on or before November 15, 1996. The 15% ROP Plan submittals were required to be submitted to the EPA by November 15, 1993. The EPA approved Louisiana's 15% ROP Plan on October 22, 1996 (61 FR 54737).

The following is a summary of the emissions reductions in the 15% ROP Plan:

Louisiana 15 percent ROP plan required reductions (Excluding RVP/FMVCP)	(Tons/Day)
15% ROP Reduction	29.7
I/M Correction	1.3
RACT Correction	0.0
Growth	3.8
Total	34.8
Reductions In the Plan:	
Stage II Vapor Recovery	3.4
Vents to Flares	3.7
Marine Vapor Recovery	8.6
Tank Fitting Controls	7.9
Fugitive Emission Controls	10.4
Federal Rules (Wastewater National Emission Standards for Hazardous Air Pollutants; Volatile Organic Storage New Source Performance Standards)	1.5
Compliance Orders/Permits	1.0
Other (Tank Vent Recovery, Secondary Roof Seal on Tank)	.9
Total	37.4
Surplus Reductions (To Be Carried Over to Post-1996 Rate-of-Progress Plan)	2.6

Louisiana subsequently submitted a site-specific revision to the approved 15% ROP Plan on December 20, 1997. On May 11, 1998, the EPA approved the 15% ROP Plan revision (63 FR 25773).

In another rulemaking action, the EPA redesignated Pointe Coupee Parish, which was formerly part of the six-parish Baton Rouge nonattainment area, to attainment for the ozone NAAQS (62 FR 648, dated January 6, 1997). The Baton Rouge area was designated nonattainment for ozone and classified as serious pursuant to sections 107(d)(4) and 181(a) of the Act (56 FR 56694, dated November 6, 1991). (It should be noted that, in the August 18, 1998, proposal, the EPA did not reopen or request comment on the approval actions described in this section.)

D. Current SIP Submittals

In a letter from the Governor dated November 10, 1994, the State of Louisiana submitted to the EPA the Post-1996 ROP Plan and attainment demonstration according to section 182(c)(2). The combined plan submittal addressed both the 9 percent VOC emissions reduction requirement and the requirement to demonstrate attainment of the ozone NAAQS by the area's statutory attainment date, November 15, 1999. The SIP submittal was deemed administratively complete on May 15, 1995, by operation of law pursuant to section 110(k)(1)(B) of the Clean Air Act.

Subsequently, on December 22, 1995, the Governor of Louisiana submitted revisions to the November 10, 1994, submittal. The EPA determined that, in effect, this revised Post-1996 ROP Plan and Attainment Demonstration superseded the previous submittal.[1] The plan was determined to be administratively complete on March 22, 1996. The revisions that Louisiana made to the plan substantially modified the mix of control measures utilized to satisfy the 9% ROP requirement, and also made changes to the attainment demonstration based on the EPA's draft guidance document on attainment modeling entitled, *Guidance on Use of Modeled Results to Demonstrate Attainment of the Ozone NAAQS*. As provided for by the draft guidance document on modeling, the submittal included a weight-of-evidence determination in support of the urban airshed modeling results.

Finally, on January 2, 1997, the Governor of Louisiana submitted a revision to the December 22, 1995, submittal. The 1997 submittal included significant changes to the 1990 base year emissions inventory (and associated 15% and 9% ROP reductions) to account for the impending redesignation of Pointe Coupee Parish to ozone attainment. Also, the 1997 submittal incorporated into the 1990 base year emissions inventory previously unreported emissions from several point sources. In addition, the 1997 submittal removed the emission reduction credits taken for the vehicle I/M control measure in the December 22, 1995, submittal, and replaced them with additional point source emission reductions. Furthermore, the submittal incorporated enhanced mobile modeling required by Federal conformity regulations, and also included an analysis of how removal of the I/M reductions would impact the modeling results submitted in the December 22, 1995, attainment demonstration. The 1997 submittal was determined to be administratively complete on June 20, 1997.

In addition, Louisiana submitted its contingency measure, point source emissions reduction banking

[1] In this submittal, the State deleted several of the appendices found in the previous submittal and substantially revised the remaining portion of the plan (i.e., control strategy, modeling demonstration, etc.). The December 22, 1995, submittal is capable of standing alone and does not rely on the November 10, 1994, submittal to be a complete plan. As such, the EPA's legal obligation to act on the State's original Post-1996 ROP Plan/Attainment Demonstration submittal, dated November 10, 1994, is rendered moot.

regulations, as part of the December 15, 1995, 15% ROP Plan pursuant to sections 172(c)(9) and section 182(c)(9) of the Act. The State subsequently submitted the same contingency measure in both the December 22, 1995, and January 2, 1997, Post-1996 ROP/attainment demonstration submittals. The EPA deferred taking action on the regulations in the context of the 15% ROP Plan approval until its rulemaking action on the Post-1996 ROP Plan/attainment demonstration SIP. (The rationale is explained in more detail in the EPA's rulemaking on the 15% ROP Plan, along with the associated Technical Support Document (TSD).)

II. Analysis of the Submittals

The EPA has reviewed the State's submittals for consistency with the Act and applicable EPA regulations and policy. A summary of the EPA's analysis is provided below. More detailed support and technical discussion are contained in the proposed rulemaking and associated TSD entitled, ''TSD for Proposed Clean Air Act Approval and Promulgation of the Post-1996 Rate-of-Progress Plan and Attainment Demonstration for the Baton Rouge Ozone Nonattainment Area (July 1998).''

A. Post-1996 Rate-of-Progress Plan

1. Introduction

As stated previously, section 182(c)(2)(B) of the Act requires each serious and above ozone nonattainment area to submit a SIP revision by November 15, 1994, which provides for an actual reduction in VOC emissions of at least three percent per year averaged over each consecutive 3-year period, beginning 6 years after enactment of the Clean Air Act Amendments of 1990 (CAAA), until the area attains the ozone standard.

2. Base Year Emissions Inventory

Under section 182(b)(1)(B), the baseline from which States determine the required reductions for ROP planning is the 1990 base year emissions inventory. The inventory is broken down into several emissions source categories: stationary, area, on-road mobile, off-road mobile, and biogenics. The EPA originally approved the Louisiana 1990 base year emissions inventory on March 15, 1995 (60 FR 13911).

Louisiana's December 15, 1995, submittal made a number of adjustments to the base year inventory. The EPA acted upon the revised 1990 base year inventory as part of its rulemaking on the 15% ROP Plan. In that rulemaking, however, the EPA failed to codify its approval of the revised base year inventory in the Code of Federal Regulations (CFR) (specifically, 40 CFR part 52). In this rulemaking, the EPA is taking final action to codify its approval of the revised base year inventory (in the context of the rulemaking on the 15% ROP Plan). It should be noted that, in the August 18, 1998, proposal, the EPA did not reopen or ask for comment on its March 15, 1995, approval of the base year inventory.

Louisiana's January 2, 1997, submittal made a number of additional revisions to the 1990 base year emissions inventory. The following table compares the revised 1990 base year VOC emissions cited in the January 2, 1997, submittal, with those cited in the approved 15% Plan rulemaking.

BATON ROUGE, LOUISIANA, 1990 BASE YEAR INVENTORY

[Ozone Seasonal VOC Emissions (Tons/Day)]

Plan submittal	Point source emissions	Area source emissions	Onroad mobile emissions	Nonroad mobile emissions	Biogenic emissions	Total
12/15/95	115.40	26.30	55.50	23.20	120.91	341.31
1/2/97	115.00	25.40	53.40	21.80	99.60	315.20
Difference	.40	.90	2.10	1.40	21.31	26.11

The bases for these changes to the inventory were discussed in detail in the EPA's proposed rulemaking.

The EPA is taking final action to approve the revised 1990 base year emissions inventory submitted on January 2, 1997.

Overall, these revisions to the 1990 base year inventory decrease the ''1990 ROP inventory,'' which is the 1990 base year inventory less the biogenic emissions, for the Baton Rouge nonattainment area from 220.4 tons/day to 215.6 tons/day. The decrease of 4.8 tons/day in the 1990 ROP inventory reduces the 15% ROP Plan reductions requirement by .6 tons/day. Since the reductions in the approved 15% ROP Plan have remained unchanged, Louisiana added the .6 tons/day differential to the 15% Plan surplus reductions resulting in a total surplus of 3.2 tons/day available to be carried over to the Post-1996 ROP Plan. The EPA has determined this revised surplus to be acceptable for use in the Post-1996 ROP Plan.

3. Adjusted Base Year Inventory

Section 182(c)(2)(B) states that the rate-of-progress reductions must be achieved ''from the baseline emissions described in subsection 182(b)(1)(B).'' This baseline value is termed the 1990 adjusted base year inventory. Section 182(b)(1)(B) defines baseline emissions (for the purposes of calculating each milestone VOC/nitrogen oxides (NOx) emissions reduction) as ''the total amount of actual VOC or NOx emissions from all anthropogenic sources in the area during the calendar year of enactment.'' This section excludes from the baseline the emissions that would be eliminated by FMVCP regulations promulgated by January 1, 1990, and the RVP regulations promulgated by the time of enactment (at 55 FR 23666, June 11, 1990), which require maximum RVP limits for gasoline to be sold in nonattainment areas during the peak ozone season.

In the August 18, 1998, proposal, the EPA provided a detailed explanation of the methodology for calculating the FMVCP/RVP adjustment. The EPA is taking final action to approve the FMVCP/RVP adjustment factor and the inventories discussed above, as follows:

Emissions inventory	Tons/Day
A. 1990 Base Year Emissions Inventory.	315.2
B. 1990 Rate-of-Progress Inventory (Base Year—Biogenics)	215.6
C. Emissions Reductions from the Pre–1990 FMVCP and Phase II RVP Expected by 1999	24.4
D. 1990 Adjusted Base Year Inventory (B–C)	191.2

4. Required Rate-of-Progress Reductions

The next step is then to calculate the Post-1996 ROP reductions requirement. In order to do so, the 1990 adjusted base

year VOC inventory is multiplied by nine percent. Thus, the Post-1996 ROP reduction requirement is 17.2 tons/day (.09 × 191.2). The EPA has determined the State's calculation of the Post-1996 ROP reduction requirement to be acceptable.

5. Fleet Turnover Correction Term

In the absence of any new requirements of the CAAA, some decrease in motor vehicle emissions will occur automatically due to fleet turnover. States are not allowed to take credit for these reductions for ROP purposes. During the State's calculation of the 1996 target level of emissions, these FMVCP reductions, along with non-creditable RVP reductions that would occur between 1990 and 1996, were subtracted from the 1990 ROP inventory to calculate the 1990 adjusted base year inventory. This 1990 adjusted base year inventory was then used to calculate the required reductions and the 1996 target level of emissions.

Between 1996 and 1999, there will be some additional reductions in emissions due to fleet turnover that are not creditable. These additional, non-creditable reductions are referred to as the fleet turnover correction term. The fleet turnover correction term is the difference between the 1999 and 1996 FMVCP/RVP mobile source reductions, or 3.0 tons/day. The EPA has determined the fleet turnover correction term in the Baton Rouge Post-1996 ROP Plan to be acceptable.

6. Calculation of Target Level of Emissions

For the purpose of calculating the 1999 target, the 1996 target inventory (obtained from the 15% ROP Plan calculations) is used. The 1996 target inventory used by the State in this calculation was revised from the target inventory approved as part of the 15% ROP Plan rulemaking in order to account for the changes made to the 1990 base year inventory described in detail in the August 18, 1998, proposal. The EPA is taking final action to approve the State's revised 1996 target level of emissions of 163.8 tons/day.

The 1999 target level of emissions is the amount of VOC emissions that must be achieved in order for the nonattainment area to demonstrate that the 9% ROP requirement has been met. The 1999 target level used by the State in the Post-1996 ROP Plan is the revised 1996 target level (163.8 tons/day), less the 9% ROP reductions (17.2 tons/day), less the fleet turnover correction term (3.0 tons/day), or 143.6 tons/day. The EPA is taking final action to approve the State's 1999 target level of emissions of 143.6 tons/day.

7. Growth Calculations

a. Introduction. The EPA has interpreted the Act to require that States must provide for sufficient control measures in their ROP Plans to offset any emissions growth expected to occur after 1996. Therefore, to meet the ROP requirement, a State must provide for sufficient emissions reductions to offset projected growth in emissions in addition to the three percent annual average reduction of VOC emissions. Thus, an estimate of growth in emissions from 1996 to 1999 is required for determining the total amount of required reductions in the Post-1996 ROP Plan.

b. EPA Action. In the August 18, 1998, proposal, the EPA provided a detailed description of the methodology the State followed for projecting growth in each source category during the period 1996–1999.

The following Table summarizes the projected emissions growth by source category for the nonattainment area:

BATON ROUGE GROWTH, 1996–1999

Source category	Tons/Day
Point	0.2
Area	0.2
On-road Mobile	2.4
Non-road Mobile	0.2
Subtotal	3.0
Offset from Growth of 15% Plan Point Source Reductions	(0.2)
Total Growth in 9% Plan	2.8

The EPA has determined that the State's methodology for estimating emissions growth for the period 1996–1999 is acceptable.

8. Total Required Reductions

The total required reductions in the plan include the 9% ROP reductions, reductions to offset projected growth (1996–1999), and the FMVCP/RVP turnover correction reductions (1996–1999). These required reductions total 23.0 tons/day. The State's ''share'' of the required reductions consists of the 9% ROP reductions (17.2 tons/day) plus the growth offset (2.8 tons/day), or 20.0 tons/day. The FMVCP/RVP turnover correction reductions (3.0 tons/day) are the Federal reductions that are not creditable towards meeting the ROP/growth offset requirements.

9. Measures to Achieve the Required Reductions

a. Introduction. As described in the August 18, 1998, proposed rulemaking, the State relied on a combination of surplus emission reductions from the 15% ROP Plan, along with additional control measures to achieve the emissions reductions required for the Post-1996 ROP Plan. The EPA has determined that both the surplus reductions from the 15% ROP Plan and the emissions reductions claimed from the control measures in the Post-1996 ROP Plan are acceptable for meeting the 9% (net of growth) emissions reductions requirement. The reader is referred to the proposal and associated TSD for a detailed description of the control measures and their associated reductions, which are summarized below:

Louisiana 9 percent plan required reductions (Excluding RVP/FMVCP):	(TONS/DAY)
9% ROP Reduction	17.2
Growth	2.8
Total	20.0
REDUCTIONS IN PLAN:	
Federal Measures:	
FMVCP Tier 1 Standards	1.0
Small Engines Rule	1.1
Architectural and Industrial Maintenance Coatings Rule	1.1
Autobody Refinishing Rule	0.6

Louisiana 9 percent plan required reductions (Excluding RVP/FMVCP):	(TONS/DAY)
Consumer Products Rule	0.9
Other Sources:	
Surplus Reductions in 15% Plan	3.2
Barge Cleaner (Permit Modification)	0.8
Acetylene Plant (Agreed Order)	3.2
Glycol Dehydrator Controls	8.4
Vents to Flares	1.1
Total Reductions	21.4
SURPLUS REDUCTIONS	1.4

b. EPA Action. The EPA is taking final action to approve the emissions reductions claimed in the January 2, 1997, Post-1996 ROP Plan as creditable towards the 9% ROP requirements of section 182(C)(2)(B) of the Act. The EPA is also approving into the SIP the Borden Chemical and Plastics Reasonable Further Progress Agreed To Order. The barge cleaner permit modification was issued under a SIP-approved nonattainment new source review program and is, therefore, already part of the Louisiana SIP and Federally enforceable. In addition, the State's waste gas regulation (LAC 33:III.2115), which requires controls on glycol dehydrators and vent streams, has already been approved into the SIP.

B. Motor Vehicle Emissions Budgets

1. Introduction

As stated previously, section 176(c) of the Act, and the Federal Transportation Conformity Rule require States to establish motor vehicle emissions budgets in any control strategy SIP that is submitted for attainment and maintenance of the NAAQS. Louisiana submitted, in the January 2, 1997, Post-1996 ROP Plan, projected (1999) motor vehicle emissions budgets for VOC and NO_X for the 5-parish Baton Rouge ozone nonattainment area.

Specifically, for the 5-parish serious ozone nonattainment area, the State established the following VOC/NO_X mobile vehicle emissions budgets:

BATON ROUGE, LA 1999 MOTOR VEHICLE EMISSIONS BUDGETS

Pollutant	Budget (Tons/Day)
VOC	33.93
NOx	58.03

2. EPA Action

The EPA has determined that the State's methodology for projecting the 1999 motor vehicle VOC and NO_X emissions is acceptable. Therefore, the EPA is taking final action to approve the figures in the above table as the official 1999 MVEBs to be used for transportation conformity determinations.

C. Contingency Measures

1. Introduction

Under section 172(c)(9) of the Act, ozone nonattainment areas classified as moderate or above must submit contingency measures to be implemented if RFP is not achieved or if the standard is not attained by the applicable attainment date. The ''General Preamble for the Implementation of Title I of the Clean Air Act Amendments of 1990'' (57 FR 13498, April 16, 1992) states that the contingency measures should, at a minimum, ensure that an appropriate level of emissions reduction progress continues to be made if attainment or RFP is not achieved in a timely manner and additional planning by the State is needed.

In the General Preamble, the EPA interpreted the Act to require States with moderate and above ozone nonattainment areas to include sufficient contingency measures in their November 1993 submittals so that, upon implementation of such measures, additional emissions reductions of up to three percent of the emissions in the adjusted base year inventory (or a lesser percentage that will cure the identified failure) would be achieved in the year following the year in which the failure has been identified. States must show that their contingency measures can be implemented with minimal further action on their part and with no additional rulemaking actions such as public hearings or legislative review.

Additional contingency provisions are included in section 182(c)(9) for serious ozone nonattainment areas. These latter provisions are similar to the section 172(c)(9) requirements except that the focus in section 182 (Ozone Areas) is on meeting emissions reductions milestones (section 182(g)).

2. Point Source Emissions Banking

Louisiana identified, in both its 15% and Post-1996 ROP Plans submittals, the State's point source VOC/NO_X banking regulations (LAC 33:III sections 601, 603, 605, 607, 613, 615, 617, 619, 621, 623, and 625)[2] as the three percent contingency measure. These banking regulations are intended to meet the contingency measure requirements of both section 172(c)(9) and section 182(c)(9) of the Act. The adopted point source banking regulations were initially submitted to the EPA for approval in the December 15, 1995, 15% ROP Plan submittal. The EPA deferred taking action on the regulations in the context of the 15% ROP Plan approval until its rulemaking action on the Post-1996 ROP Plan/Attainment Demonstration SIP. (The rationale for ''carving out'' the contingency measures was explained in detail in the TSD to the August 18, 1998, proposed rulemaking, as well as the TSD to the 15% ROP Plan rulemaking.) The reader is referred to the EPA's proposal for an in-depth discussion of the point source banking regulations.

In the December 22, 1995, Post-1996 ROP Plan submittal, the State provided a table of the emissions reductions that had been banked by industry to date pursuant to the regulations. The State's contingency measure requirement is 5.7 tons/day of VOCs (three percent times the adjusted base year inventory of 191.2 tons/day). The VOC reductions ''on deposit,'' 13.0 tons/day, are well in excess of the three percent requirement.

The EPA has determined that the State has met the contingency measures requirements by having adopted and

[2] It should be noted that, in the preamble discussion to its August 18, 1998, proposal (pp. 44200 and 44207), the EPA's description of the State's submission inadvertently left out references to certain sections of the point source banking regulations submitted by the State. The correct sections, however, were actually discussed (generally and/or specifically) elsewhere in the proposal/TSD and are correctly set out in the preamble to this final rule.

submitted the point source banking regulations, and demonstrating the bank has sufficient VOC credits ''on deposit'' and available for confiscation in the event of a missed milestone/failure to attain. Furthermore, the EPA has determined that the banking rules provide for expeditious implementation of the contingency measures consistent with the time frames identified in the General Preamble.

As mentioned in the August 18, 1998, proposal, Louisiana also submitted to the EPA, in the January 2, 1997, submittal, a correction to a typographical error in section 615, ''Schedule for Submitting Applications.'' The EPA is taking final action to also approve this correction to the point source banking rules.

3. EPA Action

The EPA is taking final action to approve the already-banked VOC emissions reductions credits (totaling 5.7 tons/day) toward meeting the three percent contingency measure requirement pursuant to sections 172(c)(9) and 182(c)(9) of the Act.

The EPA has determined that the point source VOC/NO_X banking regulations are generally consistent with the Act, EPA policy/guidance and Federal regulations. Therefore, the EPA is taking final action to approve the State's banking regulations as meeting the requirements for SIP approval under part D and section 110 of the Act.

It should be noted that the scope of this final rulemaking is to approve the banked VOC emissions reductions as creditable toward the contingency measures pursuant to sections 172(c)(9) and 182(c)(9) of the Act, and to approve all of the point source banking regulations as an acceptable SIP revision pursuant to part D and section 110 of the Act. The EPA is not, however, approving the banking regulations as an economic incentive program (EIP) pursuant to the EPA's Economic Incentives Program Rules (59 FR 16690) and section 182(g) of the Act. (Since the State has not expressly submitted the point source banking regulations as a section 182(g) SIP revision, the EPA believes it beyond the scope of this rulemaking to act upon the banking regulations as an EIP.)

D. Additional Rule Submitted

The State elected to include regulation LAC 33:III.611, ''Mobile Sources Emissions Reductions,'' in the January 2, 1997, submittal for the EPA's approval as part of the overall emissions banking program. However, the State is not taking any reduction credit in the contingency plan from this voluntary mobile source emissions reduction program. In fact, no vehicles have actually been scrapped to date under the program and, hence, no mobile emission reduction credits have been banked statewide as part of the vehicle scrappage program.

Since the State's submission of section 611, certain national policy issues have arisen surrounding the use of mobile source-generated emissions reductions credits for use by point sources. Pending resolution of these issues, the EPA is deferring taking action on the regulation at this time. The deferral will have no effect on either the Post-1996 ROP Plan or the Attainment Demonstration since the State is not relying on reductions from the vehicle scrappage program to meet the reductions target or demonstrate attainment. (A more in-depth discussion of the EPA's rationale for deferring action on the rule was provided in the TSD to the August 18, 1998, proposed rulemaking.)

E. Attainment Demonstration

1. Introduction

As stated previously, section 182(c)(2)(A) of the Act stipulates that serious and above ozone nonattainment areas must submit a revision to the SIP that includes a demonstration that the plan, as revised, will provide for attainment of the NAAQS for ozone by November 15, 1999. In addition to the 15% and 9% (net of growth) ROP reductions requirements, if the mandatory emission reductions are not sufficient to demonstrate attainment of the ozone NAAQS by November 15, 1999, emissions (VOCs and/or NO_X) must be further reduced until attainment is demonstrated through photochemical grid modeling.

For ozone nonattainment areas classified as serious or above, section 182(c)(2)(A) of the Act requires an attainment demonstration based on photochemical grid modeling, for which the Urban Airshed Model (UAM) is the EPA-approved model. *See* appendix W of 40 CFR part 51.

The following guidance documents establish the acceptable techniques for application of UAM to demonstrate attainment of the ozone NAAQS:

EPA's *Guideline on Air Quality Models (Revised)* (July 1986);

EPA's *Guideline for Regulatory Application of the UAM* (July 1991); and

EPA's final *Guidance on use of Modeled Results to Demonstrate Attainment of the Ozone NAAQS* (June 1996).

The UAM model uses an inventory of pollutant emissions, together with air quality and meteorological data, as input to a system of algorithms incorporating chemistry and dispersion, in order to simulate an observed pollution episode. Once a ''base case'' is developed that meets the minimum performance criteria, projected future emissions are used as input to simulate air quality in the attainment deadline year. Various combinations of geographically uniform emission reductions are simulated to determine approximate attainment reduction targets. Planners design a control strategy to meet these targets, and then simulate it with UAM, including the spatially and temporally varying effects of the selected controls. Attainment is demonstrated when the modeled air quality with emission controls in effect is below the NAAQS throughout the geographical modeling domain.

The EPA's *Guidance on the Use of Modeled Results to Demonstrate Attainment of the Ozone NAAQS* allows States to use a ''weight-of-evidence'' determination if the modeled attainment test is not fully passed, showing that attainment of the NAAQS is still likely. (The reader is referred to the EPA's proposal for a detailed discussion of UAM modeling procedures and requirements.)

2. EPA Action

The EPA's review focused on the data sources used, technical judgments, and procedures followed in input preparation and performing quality assurance and diagnostics. The EPA also evaluated the model's base case performance, consistency of control measure simulation inputs with submitted control measures, adequacy of the demonstration of attainment of the NAAQS, and the consistency/completeness of the modeling documentation.

a. Episode Selection and Base Case Performance. As explained in the *Guideline for the Regulatory Application of the Urban Airshed Model,* episodes are chosen for modeling based on their high ozone levels, data availability and other criteria. Generally, episodes should be chosen that are approximately as severe as the area's design value, which is based on historical ozone highs. During a particular episode, the observed ozone peak may be higher or lower than the design value; but as long as it is relatively close, that episode can be accepted for use in an attainment demonstration.

The *Guideline for the Regulatory Application of the Urban Airshed Model* calls for a minimum of three primary episode days to be modeled. The EPA

may allow areas to use just two episode days if they are based on a field study, since this provides substantially more complete data, and, hence, more confidence in model development procedures and results. In the case of the Baton Rouge demonstration, the State modeled three primary episode days.

The following three episodes were selected for use in the December 22, 1995, Baton Rouge Attainment Demonstration SIP submittal: August 15–16, 1989, May 24–25, 1990; and August 18–19, 1993.

Once the episodes were chosen, the modelers are required to simulate these observed pollution episodes using the urban airshed model. In conducting the Baton Rouge base case model performance evaluation, the State employed both graphical and statistical performance measures to gauge their success. (A discussion of the graphical and statistical tests used in the evaluation of the Baton Rouge modeling demonstration was provided in the EPA's August 18, 1998, proposal and associated TSD.) In the Baton Rouge base case simulations, the model performance for the August 15–16, 1989, and August 18–19, 1993, episodes was rated ''good,'' and the model performance for the May 24–25, 1990, episode was rated ''very good.'' The EPA has determined that the Baton Rouge episodes had acceptable performance and met the *Guideline* criteria.

b. Attainment Test. The *Guidance on use of Modeled Results to Demonstrate Attainment of the Ozone NAAQS* (June 1996) identifies two approaches that the State can use for demonstrating attainment of the ozone NAAQS. One of the acceptable approaches is called the ''Deterministic Approach,'' which consists of a deterministic test and an optional weight-of-evidence determination. The deterministic test is passed if predicted maximum ozone concentrations are less than or equal to 124 parts per billion (ppb) in all surface grid cells on all modeled primary episode days. If the test is not passed, a weight-of-evidence determination may be used to show that attainment of the NAAQS is still likely.

Meanwhile, the second acceptable approach is called the ''Statistical Approach.'' This approach consists of two parts: a statistical test and a weight-of-evidence determination. The statistical test includes three benchmarks. The first benchmark limits the number of allowed exceedences, the second restricts the magnitude of an allowed exceedence, and the third requires a minimum level of improvement in air quality to be exceeded. If one or more of the benchmarks is failed, a weight-of-evidence determination may also be performed using corroborative information. If the corroborative information is consistent with the likelihood that a proposed strategy will lead to attainment of the ozone NAAQS by statutory dates, attainment has been demonstrated.

As discussed in detail in the EPA's August 18, 1998, proposal, the State elected to follow the ''Statistical Approach,'' consisting of a statistical test and weight-of-evidence determination, for demonstrating attainment of the ozone NAAQS through UAM modeling.

c. Photochemical Grid Model Used. The State used UAM Version IV, an EPA-approved photochemical grid model, to develop the attainment demonstration for the Baton Rouge area. The State performed its modeling activities as outlined in the UAM modeling protocols and according to the EPA's *Guideline for Regulatory Application of the Urban Airshed Model.* (In advance of performing the UAM analyses, the State developed a specific protocol for conducting its modeling activities, which EPA reviewed and approved.)

The Baton Rouge modeling domain covers all or part of 20 parishes in Louisiana, including the Baton Rouge serious ozone nonattainment area consisting of East Baton Rouge, West Baton Rouge, Livingston, Iberville, and Ascension Parishes.

The EPA has determined that the State followed acceptable procedures to develop the meteorological and air quality inputs, base case emissions inventories, projection inventories, and future boundary conditions used in the UAM modeling. (The reader is referred to the EPA's proposal for a more in-depth discussion of the methodology the State followed in developing these model inputs.)

d. Demonstration of Attainment. The EPA's *Guideline for the Regulatory Application of the Urban Airshed Model* stipulates that, for the primary episode days modeled, there should be no predicted daily maximum ozone concentrations greater than 124 ppb anywhere in the modeling domain for each primary episode day modeled. However, in its subsequent *Guidance on the Use of Modeled Results to Demonstrate Attainment of the Ozone NAAQS* (June 1996), the EPA revised the model test for demonstrating attainment of ozone NAAQS. (The revisions were intended to make the modeled attainment test more closely reflect the form of the NAAQS.) In the *Guidance*, the EPA recommended that either the ''Statistical Approach'' or ''Deterministic Approach'' should be used for the attainment demonstration of the ozone NAAQS. (These approaches were discussed in detail in the proposed rulemaking.)

As stated above, the State elected to use the ''Statistical Approach,'' consisting of a statistical test with optional weight-of-evidence determination, to demonstrate attainment of the ozone NAAQS. The statistical test included the application of three benchmark tests. The weight-of-evidence determination entailed the use of supplementary analyses to determine whether attainment was likely, despite model results which did not pass the statistical test.

The State used the three selected episodes, all having good to very good base case model performance ratings, for demonstrating attainment of the ozone NAAQS. These episodes were modeled using the projected 1999 emission inventory, which included the emission controls to be implemented through 1999. The results of the various benchmark tests are discussed in detail in the August 18, 1998, proposed rulemaking.

e. Modeling Evaluation. The EPA has determined that the State's attainment demonstration for the Baton Rouge ozone nonattainment area fulfills the requirements of section 182(c)(2)(A) of the Act. The State adequately followed the EPA's guidance on the application of the UAM for demonstrating attainment of the ozone NAAQS. Following the ''Statistical Approach,'' it demonstrated that two of the three episodes met or nearly met all the specified benchmark criteria. Furthermore, supplementary information provided by the State for consideration in the weight-of-evidence determination (i.e., mid-course review, severity of selected episodes, uncertainty in the boundary condition estimates, etc.) supported the modeled attainment demonstration.

The *Guidance on the Use of Modeled Results to Demonstrate Attainment of the Ozone NAAQS* also allows the use of normalized trend data, results from observational models and or other models and consideration of incremental cost/benefit estimates, etc., in a weight-of-evidence determination. In determining whether the State's ''Statistical Approach'' to demonstrating attainment was adequate, the EPA considered general trend data, which reflected reductions in monitored ozone values, precursor emissions, and total exceedence days since 1990.

As stated previously under ''Current SIP Submittals,'' the State, in its January 2, 1997, submittal, removed the emission reduction credits taken for the vehicle inspection and maintenance control measure included in the December 22, 1995 Post-1996 ROP Plan submittal, and replaced them with additional point source reductions. The January 2, 1997, submittal provided an analysis of how removal of the I/M reductions would impact the modeling results submitted in the December 22, 1995, attainment demonstration. The EPA reviewed the State's analysis and concurred that removal of the I/M reductions from the plan would not significantly alter the modeling results.

In summary, based on the results of the statistical test, the weight-of-evidence determination, and the I/M impact analysis, the EPA has determined that State adequately demonstrated the modeled control strategy would provide for attainment of the ozone NAAQS by the statutory attainment date.

f. Control Strategy Evaluation. The EPA has determined that the modeling results for Baton Rouge adequately demonstrate that the area could attain the ozone standard by 1999 through the implementation of a VOC-only control strategy consisting of the Federally enforceable 15 Percent and Post-1996 ROP VOC reductions (net of growth) from the 1990 base year levels. The reader is referred to the proposed rulemaking for a more in-depth discussion of the control strategy modeled.

The EPA is taking final action to approve Louisiana's Attainment Demonstration SIP submittals, dated December 22, 1995, and January 2, 1997, as meeting the requirements of section 182(c)(2)(A) of the Act for demonstrating attainment of the NAAQS for ozone by November 15, 1999. Through photochemical grid modeling, the State has demonstrated to the EPA's satisfaction that the VOC reductions in the 15% and Post-1996 ROP Plans (34.8 and 21.4[3] tons/day, respectfully) are sufficient to demonstrate attainment of the ozone NAAQS by the statutory deadline.

III. Final Rulemaking Action

The EPA has reviewed the SIP submittals for consistency with the Act, applicable EPA regulations and EPA policy, and is approving the following under sections 110(k)(3), 301(a), and part D of the Act:

A. The Baton Rouge, Louisiana, Post-1996 Rate-of-Progress Plan, submitted December 22, 1995, and revised January 2, 1997, as meeting the requirements of section 182(c)(2)(B) of the Act to achieve a reduction in VOC emissions (net of growth) of 9 percent between 1996 and 1999.

B. The Baton Rouge, Louisiana, contingency plan, initially submitted as part of the 15% ROP Plan on December 15, 1995, and, subsequently, as part of the Post-1996 ROP Plan submitted December 22, 1995, and revised January 2, 1997. The EPA is taking final action to approve the contingency plan as meeting the requirements of sections 172(c)(9) and 182(c)(9) of the Act that moderate and above ozone nonattainment areas include contingency measures in their ROP Plan submittals. Specifically, the EPA is taking final action to approve the contingency-reserved VOC banked emissions reductions of 5.7 tons/day (achieved through the State's banking regulations), identified in a table in appendix T of the December 22, 1995, submittal, as creditable towards the 3 percent contingency requirements of sections 172(c)(9) and 182(c)(9) of the Act. In addition, the EPA is taking final action to approve the point source VOC and NO_X emissions reductions banking regulations (LAC 33:III sections 601, 603, 605, 607, 613, 615, 617, 619, 621, 623, and 625) submitted December 15, 1995, and revised January 2, 1997, as meeting the requirements for SIP approval under part D and section 110 of the CAAA.

C. The 1999 Motor Vehicle Emissions Budgets for on-road mobile VOC and NO_X emissions for the Baton Rouge 5-parish ozone nonattainment area submitted January 2, 1997, as meeting the requirements of section 176(c) of the Act and 40 CFR 51.452(b) of the Federal Transportation Conformity Rule.

D. The Baton Rouge, Louisiana Attainment Demonstration submitted December 22, 1995, and revised January 2, 1997, including the modeling analyses, as meeting the requirements of section 182(c)(2)(A) of the CAAA to provide for attainment of the ozone NAAQS by the applicable November 15, 1999, attainment date.

E. Revisions to the 1990 base year VOC emissions inventory submitted January 2, 1997 as meeting the requirements of section 182(a)(1) of the Act. In addition, the EPA is taking final action to codify the revisions to the 1990 base year emissions inventory submitted as part of the 15% ROP Plan approved October 22, 1996 (61 FR 54737).

F. The revision to the 1996 target level of VOC emissions submitted January 2, 1997, as meeting the requirements of part D and EPA guidance.

The EPA is deferring taking any action at this time on the State's accelerated vehicle retirement regulation (LAC 33:III.611) entitled, ''Mobile Sources Emission Reductions,'' which was submitted to the EPA on January 2, 1997. Deferring action on this regulation has no effect on either the Baton Rouge Post-1996 ROP Plan or on the Baton Rouge Attainment Demonstration since the State took no credit in these plans for reductions from vehicle scrappage.

IV. Administrative Requirements

A. Executive Order (E.O.) 12866

The Office of Management and Budget (OMB) has exempted this regulatory action from E.O. 12866, entitled ''Regulatory Planning and Review.''

B. Executive Order 12875

Under E.O. 12875, EPA may not issue a regulation that is not required by statute and that creates a mandate upon a State, local or tribal government, unless the Federal government provides the funds necessary to pay the direct compliance costs incurred by those governments, or EPA consults with those governments. If EPA complies by consulting, E.O. 12875 requires EPA to provide to the OMB a description of the extent of EPA's prior consultation with representatives of affected State, local and tribal governments, the nature of their concerns, copies of any written communications from the governments, and a statement supporting the need to issue the regulation. In addition, E.O. 12875 requires EPA to develop an effective process permitting elected officials and other representatives of State, local and tribal governments ''to provide meaningful and timely input in the development of regulatory proposals containing significant unfunded mandates.''

Today's rule does not create a mandate on State, local, or tribal governments. The rule does not impose any enforceable rules on any of these entities. This action does not create any new requirements but simply approves requirements that the State is already imposing. Accordingly, the requirements of section 1(a) of E.O. 12875 do not apply to this rule.

C. Executive Order 13045

Executive Order 13045, entitled ''Protection of Children from Environmental Health Risks and Safety Risks'' (62 FR 19885, April 23, 1997),

[3] The 21.4 tons/day in emissions reductions includes the 3.2 tons/day surplus reductions from the 15% ROP Plan carried over to the Post-1996 ROP Plan.

applies to any rule that: (1) is determined to be ''economically significant'' as defined under E.O. 12866, and (2) concerns an environmental health or safety risk that the EPA has reason to believe may have a disproportionate effect on children. If the regulatory action meets both criteria, the Agency must evaluate the environmental health or safety effects of the planned rule on children, and explain why the planned regulation is preferable to other potentially effective and reasonably feasible alternatives considered by the Agency.

The EPA interprets E.O. 13045 as applying only to those regulatory actions that are based on health or safety risks, such that the analysis required under section 5–501 of the Order has the potential to influence the regulation. This final rule is not subject to E.O. 13045 because it approves a State program.

D. Executive Order 13084

Under E.O. 13084, EPA may not issue a regulation that is not required by statute, that significantly or uniquely affects the communities of Indian tribal governments, and that imposes substantial direct compliance costs on those communities, unless the Federal Government provides the funds necessary to pay the direct compliance costs incurred by the tribal governments, or EPA consults with those governments. If EPA complies by consulting, E.O. 13084 requires EPA to provide to the OMB, in a separately identified section of the preamble to the rule, a description of the extent of EPA's prior consultation with representatives of affected tribal governments, a summary of the nature of their concerns, and a statement supporting the need to issue the regulation. In addition, E.O. 13084 requires EPA to develop an effective process permitting elected officials and other representatives of Indian tribal governments ''to provide meaningful and timely input in the development of regulatory policies on matters that significantly or uniquely affect their communities.''

Today's rule does not significantly or uniquely affect the communities of Indian tribal governments. This action does not involve or impose any new requirements that affect Indian tribes. Accordingly, the requirements of section 3(b) of E.O. 13084 do not apply to this rule.

E. Regulatory Flexibility Act

The Regulatory Flexibility Act (RFA), 5 U.S.C. 600 *et seq.*, generally requires an agency to conduct a regulatory flexibility analysis of any rule subject to notice and comment rulemaking requirements unless the agency certifies that the rule will not have a significant economic impact on a substantial number of small entities. Small entities include small businesses, small not-for-profit enterprises, and small governmental jurisdictions. This final rule will not have a significant impact on a substantial number of small entities because SIP approvals under section 110 and subchapter I, part D of the Act do not create any new requirements but simply approve requirements that the State is already imposing. Therefore, because the Federal SIP approval does not create any new requirements, I certify that this action will not have a significant economic impact on a substantial number of small entities. Moreover, due to the nature of the Federal-State relationship under the Act, preparation of a flexibility analysis would constitute Federal inquiry into the economic reasonableness of state action. The Act forbids EPA to base its actions concerning SIPs on such grounds. *See Union Electric Co.,* v. *U.S. EPA,* 427 U.S. 246, 255–66 (1976); 42 U.S.C. 7410(a)(2).

F. Unfunded Mandates

Under section 202 of the Unfunded Mandates Reform Act of 1995, signed into law on March 22, 1995, EPA must prepare a budgetary impact statement to accompany any proposed or final rule that includes a Federal mandate that may result in estimated annual costs to State, local, or tribal governments in the aggregate; or to private sector, of $100 million or more. Under section 205, EPA must select the most cost-effective and least burdensome alternative that achieves the objectives of the rule and is consistent with statutory requirements. Section 203 requires EPA to establish a plan for informing and advising any small governments that may be significantly or uniquely impacted by the rule.

The EPA has determined that the approval action promulgated does not include a Federal mandate that may result in estimated annual costs of $100 million or more to either State, local or tribal governments in the aggregate, or to the private sector. This Federal action approves pre-existing requirements under State or local law, and imposes no new requirements. Accordingly, no additional costs to State, local or tribal governments, or to the private sector, result from this action.

G. Submission to Congress and the Comptroller General

The Congressional Review Act, 5 U.S.C. 801 *et seq.*, as added by the Small Business Regulatory Enforcement Fairness Act of 1996, generally provides that before a rule may take effect, the agency promulgating the rule must submit a rule report, which includes a copy of the rule, to each House of the Congress and to the Comptroller General of the United States. The EPA will submit a report containing this rule and other required information to the U.S. Senate, the U.S. House of Representatives, and the Comptroller General of the United States prior to publication of the rule in the **Federal Register**. A major rule can not take effect until 60 days after it is published in the **Federal Register**. This action is not a ''major'' rule as defined by 5 U.S.C. 804(2). This rule will be effective August 2, 1999.

H. Petition for Judicial Review

Under section 307(b)(1) of the Act, petitions for judicial review of this action must be filed in the United States Court of Appeals for the appropriate circuit by August 31, 1999. Filing a petition for reconsideration by the Administrator of this final rule does not affect the finality of this rule for the purposes of judicial review nor does it extend the time within which a petition for judicial review may be filed, and shall not postpone the effectiveness of such rule or action. This action may not be challenged later in proceedings to enforce its requirements. *See* section 307(b)(2).

List of Subjects in 40 CFR Part 52

Environmental protection, Air pollution control, Hydrocarbons, Intergovernmental relations, Nitrogen dioxide, Ozone, Reporting and recordkeeping requirements, Volatile organic compounds.

Dated: June 24, 1999.

Jerry Clifford,

Acting Regional Administrator, Region 6.

Part 52 of chapter I, title 40, CFR, is amended as follows:

PART 52—[AMENDED]

1. The authority for citation for part 52 continues to read as follows:

Authority: 42 U.S.C. 7401 *et seq.*

Subpart T—Louisiana

2. In § 52.970, in the ''EPA-Approved Louisiana Regulations in the Louisiana SIP'' table in paragraph (c), chapter 6 is added to read as follows:

§ 52.970 Identification of plan.

* * * * *

(c) EPA approved regulations.

EPA APPROVED LOUISIANA REGULATIONS IN THE LOUISIANA SIP

State citation	Title/subject	State approval date	EPA approval date	Comments
* * * * * * *				
Chapter 6—Regulations on Control of Emissions Reduction Credits Banking				
Section 601	Background and Purpose	Aug. 1994, LR20:874	[July 2, 1999 and Federal Register cite].	
Section 603	Applicability	Aug. 1994, LR20:874	[July 2, 1999 and Federal Register cite].	
Section 605	Definitions	Aug. 1994, LR20:874	[July 2, 1999 and Federal Register cite].	
Section 607	Stationary Point Source Reductions.	Aug. 1994, LR20:877	[July 2, 1999 and Federal Register cite].	
Section 613	ERC Bank Balance Sheet	Aug. 1994, LR20:877	[July 2, 1999 and Federal Register cite].	
Section 615	Schedule for Submitting Applications.	Jul. 1995, LR21:681	[July 2, 1999 and Federal Register cite].	Approves original rule (adopted 8/94) and subsequent revision (adopted 07/95).
Section 617	Review and Approval of ERC Bank Balance Sheets.	Aug. 1994, LR20:878	[July 2, 1999 and Federal Register cite].	
Section 619	Registration of Emission Reduction Credit Certificates.	Aug. 1994, LR20:879	[July 2, 1999 and Federal Register cite].	
Section 621	Protection of Banked ERCs.	Aug. 1994, LR20:679	[July 2, 1999 and Federal Register cite].	
Section 623	Withdrawal, Use, and Transfer of Emission Reduction Credits.	Aug. 1994, LR20:880	[July 2, 1999 and Federal Register cite].	
Section 625	Application and Processing Fees.	Aug. 1994, LR20:880	[July 2, 1999 and Federal Register cite].	
* * * * * * *				

3. In section 52.970, an entry in the ''EPA-Approved Louisiana Source-Specific Requirements'' table in paragraph (d) is added to read as follows:

(d) EPA-approved State source-specific requirements.

EPA APPROVED LOUISIANA SOURCE-SPECIFIC REQUIREMENTS

Name of source	Permit number	State approval/ effective date	EPA approval date	Comments
* * * * * * *				
Borden Chemicals and Plastics in Baton Rouge.	Reasonable Further Progress Agreed To Order.	10/24/96	[July 2, 1999 and Federal Register cite].	Submitted as part of the Baton Rouge, LA Post–1996 ROP Plan

4. In section 52.970, an entry in the ''EPA Approved Control Measures in the Louisiana SIP'' table in paragraph (e) is added to read as follows:

(e) EPA approved nonregulatory and quasi-regulatory measures.

EPA APPROVED CONTROL MEASURES IN THE LOUISIANA SIP

Control measures	Applicable geographic or non-attainment area	State submittal date/effective date	EPA approval date	Comments
* * * * * * *				
Post–1996 ROP Plan (Including a Revised 1996 Target Level of VOC Emissions).	Baton Rouge, LA	01/02/97	[July 2, 1999 and Federal Register cite].	Originally submitted 12/22/95 and revised 01/02/97.
Attainment Demonstration for the 1-hour Ozone NAAQS.	Baton Rouge, LA	01/02/97	[July 2, 1999 and Federal Register cite].	Originally submitted 12/22/95 and revised 01/02/97.

EPA APPROVED CONTROL MEASURES IN THE LOUISIANA SIP—Continued

Control measures	Applicable geographic or non-attainment area	State submittal date/effective date	EPA approval date	Comments
Contingency Plan	Baton Rouge, LA	01/02/97	[July 2, 1999 and Federal Register cite].	Submitted as part of the 15% ROP Plan on 12/14/95 and, subsequently, as part of the Post–1996 ROP Plan submitted on 12/22/95 and revised 1/2/97.
1999 Motor Vehicle Emission Budgets.	Baton Rouge, LA	01/02/97	[July 2, 1999 and Federal Register cite].	
Revised 1990 Base Year VOC Emissions Inventory.	Baton Rouge, LA	01/02/97	[July 2, 1999 and Federal Register cite].	See also 52.993.

5. Section 52.993 is amended by adding paragraphs (d) and (e) as to read as follows:

52.993 Emissions inventories.

* * * * *

(d) On December 15, 1995, the Governor of the State of Louisiana submitted a revision to the 1990 base year volatile organic compound (VOC) emissions inventory for the Baton Rouge, Louisiana ozone nonattainment area. The revised inventory was submitted as part of the revised Baton Rouge 15 Percent Rate-of-Progress Plan. This revision to the base year inventory modified the point source VOC emissions. The revisions satisfy the requirements of section 182(a)(1) of the Clean Air Act, as amended in 1990.

(e) On January 2, 1997, the Governor of the State of Louisiana submitted a revision to the 1990 base year volatile organic compound (VOC) emissions inventory for the Baton Rouge, Louisiana ozone nonattainment area. The revised inventory was submitted as part of the revised Baton Rouge Post–1996 Rate-of-Progress Plan. This revision to the base year inventory modified the point, area, non-road mobile, on-road mobile, and biogenic sources of VOC emissions. The revisions satisfy the requirements of section 182(a)(1) of the Clean Air Act, as amended in 1990.

[FR Doc. 99–16927 Filed 7–1–99; 8:45 am]

BILLING CODE 6560–50–P

ENVIRONMENTAL PROTECTION AGENCY

40 CFR Part 52

[IA 079–1079; FRL–6370–9]

Approval and Promulgation of Implementation Plans and Approval Under Section 112(l); State of Iowa

AGENCY: Environmental Protection Agency (EPA).

ACTION: Direct final rule; withdrawal.

SUMMARY: Because EPA received adverse comments, EPA is withdrawing the direct final rule for the approval of revisions to the Iowa State Implementation Plan. EPA published the direct final rule on May 13, 1999 (64 FR 25825). This approval pertained to a set of state rules recently submitted by the Iowa Department of Natural Resources. EPA stated in the direct final rule that if EPA received adverse or critical comments by June 14, 1999, EPA would publish a timely notice of withdrawal in the **Federal Register**. Therefore, due to receiving adverse comments within the comment period, EPA is withdrawing the direct final rule and will summarize and respond to the comments received and take final rulemaking action in a subsequent final rule. EPA will not institute a second comment period on this document.

DATES: The direct final rule published at 64 FR 25825 is withdrawn as of July 2, 1999.

FOR FURTHER INFORMATION CONTACT: Wayne Kaiser at (913) 551–7603.

List of Subjects in 40 CFR Part 52

Environmental protection, Air pollution control, Carbon monoxide, Intergovernmental relations, Lead, Nitrogen dioxide, Ozone, Particulate matter, Reporting and recordkeeping requirements, Sulfur oxides, Volatile organic compounds.

Dated: June 24, 1999.

Dennis Grams,

Regional Administrator, Region VII.

[FR Doc. 99–16929 Filed 7–1–99; 8:45 am]

BILLING CODE 6560–50–P

FEDERAL COMMUNICATIONS COMMISSION

47 CFR Part 73

[MM Docket No. 97–138; FCC 99–118]

Main Studio and Local Public Inspection Files for Broadcast Stations

AGENCY: Federal Communications Commission.

ACTION: Final rule.

SUMMARY: This document revises and clarifies the Commission's rules regarding the main studio and local public inspection files of broadcast television and radio stations. The intended effect of this action is to amend the retention requirements as well as other required changes to the Commission's rules.

EFFECTIVE DATE: August 2, 1999.

FOR FURTHER INFORMATION CONTACT: Victoria McCauley, Policy and Rules Division, Mass Media Bureau (202) 418–2120.

SUPPLEMENTARY INFORMATION: This is a summary of the Commission's *MO&O*, FCC 99–118, adopted May 25, 1999; released May 28, 1999. The full text of the Commission's *MO&O* is available for inspection and copying during normal business hours in the FCC Dockets Branch (Room TW–A306), 445 12th St. S.W., Washington, D.C, 20554. The complete text of this *MO&O* may also be purchased from the Commission's copy contractor, International Transcription Services (202) 857–3800, 1231 20th St., N.W., Washington, D.C. 20036.

Synopsis of Memorandum Opinion and Order

1. In the *Report and Order* (''*R&O*''), 63 FR 49487 (September 16, 1998), in this proceeding, we amended our rules regarding the main studio and local public inspection file for broadcast stations. In doing so, our goals were twofold: to strike an appropriate balance between ensuring that the public has

reasonable access to each station's main studio and public file while minimizing regulatory burdens on licensees, and to adopt clear rules that are easy to administer and understand. Consistent with these goals, we provided broadcast licensees additional flexibility in locating their main studios, required the collocation of public files and main studios, and clarified and updated our rules regarding the required contents of the public inspection files. In addition, we adopted an accommodation that requires stations to make available, by mail upon telephone request, photocopies of documents in the public file, including our revised version of ''The Public and Broadcasting.''

2. We have received five partial or limited petitions for reconsideration of the *R&O* in this proceeding and one opposition to the petitions for reconsideration. In response to these petitions for reconsideration, we take this opportunity to affirm, revise, or clarify certain of our actions. We will modify the rules by amending the scope of the accommodation and by revising slightly and clarifying the document retention requirements. We also address other requested changes.

A. Accommodation

3. In the *R&O*, we amended section 73.1125 of our rules to allow a station to locate its main studio at any location that is within either the principal community contour of any station, of any service, licensed to its community of license or 25 miles from the reference coordinates of the center of its community of license, whichever it chooses. We also amended sections 73.3526 and 73.3527 of our rules to require all stations to locate their public files, which include their political files, at their main studios. Because these rule changes could result in a station's public file being located a greater distance from its community of license than previously permitted, as an accommodation, we also amended sections 73.3526 and 73.3527 to require all stations to make available, by mail upon telephone request, photocopies of documents in the public and political file. As adopted, the rules continue to provide that the station may require the person requesting the copies to pay the reasonable cost of photocopying in advance and require the station to pay postage. To facilitate requests for public file documents over the telephone, the new rules also require stations to provide callers, if they wish to receive one, a copy of the new edition of ''The Public and Broadcasting'' free of charge. We did not amend the requirements regarding program origination capability, staff presence or toll-free service.

4. One petitioner argues that some of the newly adopted provisions are unduly burdensome and should be substantially modified or deleted and that the Administrative Procedure Act, the Paperwork Reduction Act and the Regulatory Flexibility Act bar the Commission from lawfully adopting any of the new requirements. Another petitioner argues that the accommodation should be retained as adopted, and apply to all broadcasters stations equally.

5. *Discussion*. We will retain the accommodation with modifications as discussed below. We continue to believe that the accommodation is necessary and reasonable now that broadcasters have much more flexibility in locating their public files. We disagree with State Broadcasters that our *R&O* in this proceeding was contrary to the APA, the PRA or the RFA. The *R&O* was based on a thorough record developed after a full opportunity for comment on the proposed changes to the rules in question. Our decision reasonably met our stated goals of ''balancing between ensuring that the public has reasonable access to each station's main studio and public file and minimizing the regulatory burdens on licensees.'' Our decision was also based on the ''bedrock obligation'' of each broadcast licensee to serve the needs and interests of its community of license. The PRA and RFA require agencies to ensure that they do not impose unnecessary burdens on members of industry, including small businesses and the public. However, neither the PRA nor the RFA requires any administrative agency to reduce burdens if to do so would undermine the agency's ability to fulfill the obligations of its originating statute. Pursuant to the PRA and RFA, we sought comment on the paperwork burdens and the regulatory burdens on small businesses in the *Notice of Proposed Rule Making* and received no comments. We also analyzed these burdens in the *R&O* and found that our actions properly balanced the needs of the entities involved and the public, and imposed no unnecessary burdens. In addition, the rules were approved by the Office of Management and Budget, which specifically analyzed any paperwork burdens.

6. At the time we adopted the *R&O*, we considered several different methods of accommodation and weighed the comparative burdens and public benefits associated with each. Our determination struck a reasonable balance among the competing proposals raised in the record. We considered such proposals as requiring courier, fax or e-mail delivery, or requiring stations to make their studio available at non-business hours by appointment and found that such proposals were not reasonable either because they would not serve the public universally or would unduly burden stations. We also considered a proposal to require stations either to provide transportation to requesters, or to transport the public file to them, and determined that such accommodations would be unreasonably burdensome to station owners. On the other hand, we considered such suggestions as allowing a licensee to choose the actual method of public access, and concluded that this approach would not assure reasonable accommodations for the public. We found that the accommodation furthers our stated goals of balancing public access with regulatory burden and ease and clarity of administration. We considered comments arguing, as does State Broadcasters in its Petition, that the accommodation could discourage stations from locating outside the community, and that it could, if not limited, result in frivolous or harassing requests. As we noted in the *R&O*, we believe that the rules as adopted address many of these concerns. For example, a requestor is entitled to ''The Public and Broadcasting,'' which should provide adequate guidance to make an intelligent request for information. In addition, the rules regarding public file contents, as revised, will be much easier to understand and administer for both licensees and the public seeking information. Again, as we stated in the *R&O*, the person seeking documents from a station's public file will continue to be required to pay the reasonable expenses of photocopying, which should reduce the possibility for abusive and frivolous requests.

7. In response to concerns raised by various petitioners, we will nonetheless modify the accommodation in several respects as discussed. The modifications we adopt will more narrowly tailor the accommodation, and thereby lessen regulatory burdens without undermining the public's ability to acquire reasonable access to relevant information about a broadcast station.

8. *Geographic Limitation*. On reconsideration, we will revise sections 73.3526(c)(2) and 73.3527(c)(2) to require that only those stations whose public file is located at a main studio outside the city limits of the community of license be required to provide the accommodation. We believe that this narrowing of the accommodation is justified. Stations that remain in the

community of license should be reasonably accessible to the public they serve. Indeed, we adopted the accommodation in the *R&O* in order to compensate for the fact that broadcasters may now move their public files to more distant locations outside the community of license. If a station chooses to locate its main studio and public file in its community of license under the new rules, the public file will be reasonably accessible just as before, and there should be no need for the accommodation. We will not, however, exempt from the accommodation stations whose public files are outside the community at the main studio pursuant to a waiver granted prior to our *R&O* in this proceeding. Under the new rule, these stations no longer require a waiver and thus should be treated in the same manner as other stations in the same circumstances.

9. We also will revise sections 73.3526(c)(2) and 73.3527(c)(2) to limit the required mailing area for documents requested by phone to the geographic service area of the station in question. Stations will not be required to provide this accommodation to persons outside this area. For a TV station, this area is defined by the area encompassed by the station's Grade B contour; for a radio station, it is the area within the station's protected service contour. This will clarify the scope of the accommodation requirement and minimize disputes over who is eligible for the accommodation. We nonetheless encourage, but will not require, stations to make the accommodation to persons living outside that immediate service area who may be able to view or listen to the station. We urge stations to act in good faith to accommodate viewers and listeners who reasonably claim to receive their signal even though they reside outside the relevant service contour.

10. We believe that narrowing the accommodation in this fashion is consistent with the underlying goals of this proceeding which focused on ensuring the continued access of local viewers and listeners of each station, even where a station relocates its main studio outside of its community of license. Given the limited purpose of the accommodation, we believe the accommodation should be tailored to the listeners and viewers that are served by the station. We acknowledge that, as MAP, *et. al.*, have pointed out, the accommodation, if not limited to a station's geographic service area, could offer collateral benefits, such as mail access to local citizens' attorneys who happen to be located outside the service area, or allowing citizens to compare performance of local broadcasters with distant broadcasters, or enabling national organizations and academics to collect information from broadcasters nationwide. Such considerations, however, are beyond the scope of this process and we do not address them here.

11. *Specific Guidelines.* In the *R&O* we granted stations the ability to require payment for copies prior to mailing them and noted that stations would be required to send a copy of ''The Public and Broadcasting'' free of charge to anyone requesting it. We declined to impose a numerical limit on accommodation requests a member of the public could make.

12. We decline to adopt the petitioners' proposals that we further delineate the types and amount of information stations are to give over the telephone. We reiterate our determination in the *R&O*. Therein, we gave an example of the type of telephone service we envisioned: stations, if asked, should describe to a caller the number of pages and time periods covered by a particular ownership report or children's television programming report, or the types of applications actually maintained in the station's public file and the dates they were filed with the FCC. As we stated, we also encourage stations to place the descriptions of their public files on the Internet. Again, we will not set a numerical limit on telephone requests. Particularly with the modifications we make to the accommodation today, we do not expect licensees to be unduly burdened by this requirement. Nor are we convinced that citizen requests for information will be made in bad faith to any significant extent, or that stations will be overwhelmed by such requests. A licensee, may, of course, seek a waiver or special relief from the Commission in the event such circumstances arise.

13. We also decline to adopt or recommend a specific form to be used by stations when fulfilling telephone requests. Stations may, of course, at their discretion, use forms to streamline the processing of requests and collection of associated charges. In addition, we will retain our original requirement that stations pay the cost of postage for mailing the documents requested by telephone. We believe this cost is reasonable considering the flexibility that the new rules grants to stations and the additional cost to the public of travelling to the more distant main studio location in order to view the file in person.

14. *Exempt Political File.* The *R&O* made no substantive change to the political file rules. The only change in procedure regarding the political file was that requests for the political file's contents were included in the accommodation just as any other aspect of the public file would be. Prior to the effective date of the rules, we granted a temporary and partial stay of the effective date of the accommodation provision only as it applied to requests to gain access to the contents of stations' political files. This effective date was stayed only until the end of the Fall 1998 election season, which occurred only days after the actual effective date of the rules.

15. We will grant petitioners' request and not require that stations extend the accommodation to requests for the political file. We believe that this change balances the needs of broadcasters with the needs of the public. A petitioner states that its experience shows that candidates or their representatives are the heaviest visitors to a station's public file. These persons may make daily or even more frequent requests for political file information during a campaign, because the information is in flux throughout each day of the campaign. As we recognized at the time we granted the temporary stay, a heavy volume of telephone calls could unduly disrupt a station's operations. This volume of telephone requests could occur in any election season. In exempting the political file from the accommodation, we also expect that candidates or their representatives, when seeking political file information in their professional capacities, are more likely to have greater resources and be more able to access the main studio and public file in person than would an average citizen. Since candidates or their representatives, rather than the general public, are the persons most likely to be affected by this exemption, we do not believe that the exemption will adversely affect the public interest.

B. Document Retention Requirements

16. *Applications.* In the *R&O*, the Commission amended sections 73.3526 and 73.3527 to provide that all applications be retained in a station's public file during the period each application is pending or, if granted pursuant to a waiver, during the period that the waiver remains in effect. Those rules had previously contained confusing requirements for retention which many parties requested we revise. In the *R&O* we revised the rule to include *all* applications, but we clarified and shortened the period of retention to the period during which an application remains pending. We also

changed the retention period of applications granted pursuant to a waiver to the period during which the waiver is in effect.

17. We affirm sections 73.3526 and 73.3527 as revised in the *R&O*. We are not persuaded by the argument that we should adhere to the spirit of the original public file proceeding in 1965 to require retention only of those applications that require local public notice. Members of the public may very well have an interest in reviewing all of a licensee's pending applications, even those not placed on local public notice. Moreover, our amendment to this rule to include all applications in the public file simplifies this rule greatly. We believe that the addition of some applications will not burden stations, because the number of additional applications is small, and inclusion of all applications relieves licensees and permitees of the need to seek counsel regarding the question of which applications need be kept. In addition, we amended this rule to change the retention period of applications to the period during which they are pending before the Commission or the courts. This shortens and clarifies the retention period which previously had required that applications be retained throughout the renewal period during which they were filed.

18. With respect to retaining applications granted pursuant to a waiver, we reaffirm our decision to require retention of all applications granted pursuant to a waiver for the duration of the waiver's applicability. As we stated in the *R&O*, we believe these applications must remain available to the public for the entire period the waiver is in effect to ensure the public can assist the FCC in evaluating licensee performance in light of the representations made in the application and waiver request. We also believe that the burden of retaining the application is outweighed by the need to keep an accurate and complete record of a station's operations. We decline to apply this requirement only to particular types of waivers. To do so could undermine the public's ability to examine licensee performance under the waiver, and could also unduly complicate what should be a straightforward and easy-to-apply requirement.

19. *Electronic Mail.* In the *R&O*, we amended our rules to require licensees to retain e-mail messages as well as traditional printed communications. We will modify this requirement. Section 73.3526(e)(9) was modified to extend the retention requirements to the same sort of e-mail communications as have historically applied to traditional mail communications. We recognize that personal e-mails in the workplace have become quite common, much more so than letters, and that our requirement may have had an overbroad result. To ensure that only e-mails regarding the operation of the station be retained, we will limit the e-mail retention requirement to e-mails sent to a publicly advertised e-mail address, or to station management, and we will specifically exclude the personal e-mails of staff members. We expect this exclusion of personal e-mail to avoid the possible overbroad effect of including e-mail sent to a lower level employee that might contain an inconsequential reference to station operation. We encourage stations to advertise e-mail addresses to which comments and suggestions may be sent, but we do not require this.

20. *Donors' Lists.* Section 73.3527(a)(8) of our rules requires that noncommercial educational stations maintain the lists of donors supporting specific programs. In the *R&O*, we considered but denied a petition asking us to delete this requirement from the public file. That petition argued that this provision was obsolete because it is rooted in the program log requirements that were deleted in 1980. This issue was again raised on reconsideration.

21. We disagree that this provision is obsolete. As we stated in the *R&O*, the donor list requirement is tied to our sponsorship identification requirements under Section 317 of the Act and section 73.1212 of our rules, which require noncommercial educational stations to acknowledge donors. The basic premise of these provisions is that the public is entitled to know by whom they are being persuaded. The donor list requirement for noncommercial licensees is related to the Commission's determination that noncommercial educational stations are permitted to limit their on-air program sponsorship announcements to major donors or underwriters only, but must maintain a complete donor list in their public files. Although donor lists originated as an optional alternative to logging, they were deliberately retained when the logging requirements were deleted, and stations retained their obligations to identify donors in accordance with section 73.1212. Parties had ample notice and opportunity to comment on this provision in this Docket, and their positions were given full consideration. The donor lists provide the only complete information regarding program sponsorship on noncommercial stations, and therefore will be retained. We note that the list for each program must be maintained for two years after broadcast of the program.

22. With respect to the definition of ''donors supporting specific programs,'' we will apply the same definition as applies to ''sponsors'' under the sponsorship identification provisions. That is, we expect licensees under Section 317(a)(2)(c) of the Act to exercise ''reasonable diligence'' to obtain the requisite information to assure that a proper identification is made. We note in this regard that section 73.1212(e) requires licensees to disclose the ''true identity'' of those on whose behalf a payment is made. In making this determination, unless furnished with ''credible, unrefuted evidence'' that a sponsor is acting on behalf of a third party, the broadcaster may rely on the plausible assurances of the person paying for the time that they are the true sponsor.

23. *Letters concerning violent programming.* Section 73.1202 of our rules requires that licensees of commercial AM, FM and Television broadcast stations retain in their public files for three years all written comments and suggestions received from the public regarding station operation. Section 73.3526 implements this provision with similar language. There is no similar provision requiring licensees of noncommercial educational stations to retain such written correspondence. In the *R&O* we nonetheless required that all noncommercial television licensees include in their renewal applications a summary of any letters they receive regarding violent programming even though these licensees are not required to retain such letters themselves under our rules. We based this determination on Section 204(b) of the Telecommunications Act of 1996 (''1996 Act''). This section amended Section 308(d) of the Communications Act of 1934 to require that

> [e]ach applicant for the renewal of a commercial or noncommercial television license shall attach as an exhibit to the application a summary of written comments and suggestions received from the public and maintained by the licensee (in accordance with Commission regulations) that comment on the applicant's programming, if any, and that are characterized by the commenter as constituting violent programming.

In the *R&O* we found that this requirement was appropriate in light of Congress' concern with violent programming, and would help ensure that the Commission and the public are kept informed of concerns raised by the public about such programming on both commercial and noncommercial stations.

24. A petitioner argues that since, under the Commission's rules, noncommercial stations are not required to maintain letters from the public, and the Commission has not revised this requirement, Section 308(d) does not contemplate a summary of letters to be filed by any noncommercial educational television licensee at renewal.

25. On reconsideration, we grant petitioner's request. Section 308(d) requires licensees to summarize only those letters maintained by licensees ''in accordance with Commission regulations.'' In the *R&O*, we did not amend section 73.3527 to require noncommercial educational licensees to retain letters from the public regarding violent programming. Since noncommercial educational licensees are not required to maintain these letters under our rules, we will not require them to file a summary of letters received with their renewal, even if they voluntarily retain the letters they receive. Without such a limitation, noncommercial stations would be subject to the more onerous burden of summarizing letters received during the entire renewal term while commercial broadcasters would be required to summarize only those letters received during the last three years of their renewal term. We believe this is consistent with the plain meaning of the statute. We also note that reports regarding violent television programming have raised little concern about the programming aired by noncommercial educational television stations.

26. *Ownership Reports for Noncommercial Educational Stations.* The *R&O* made an editorial amendment to the public file rule for noncommercial educational stations, 47 CFR 73.3527, to add the requirement, previously omitted, that those stations retain in their public files, a copy of their most recently filed complete ownership report (FCC Form 323–E) ''together with any subsequent supplemental report or statement filed with the FCC certifying that the current report is accurate. * * *'' We made this change to reflect the same requirement in the rule governing ownership reports, 47 CFR 73.3615.

27. We will retain the rule as revised. In the Mass Media Streamlining *R&O*, we amended section 73.3615 to require noncommercial educational stations to file ownership reports with the same frequency as commercial stations are required to file. The requirement in section 73.3527 that noncommercial educational licensees retain in the public file the most recent, complete ownership report on file with the FCC for the station, and a certification that the current report is accurate, is fully consistent with this amendment to section 73.3615.

C. Miscellaneous Matters

28. *Issuance of ''The Public and Broadcasting''.* In the *R&O* we stated that the Commission's staff would issue a revised version of the broadcast manual, ''The Public and Broadcasting.'' One petitioner asks that the Commission solicit public comment on this manual prior to issuing it.

29. We do not believe that it is necessary to solicit public comment on ''The Public and Broadcasting.'' The manual is merely a summary of our existing policies and rules relating to broadcast stations, including the changes to the rules enacted in this docket. It will be revised from time to time and issued on the Commission's web page so that stations can keep the most updated version in their public files. We disagree that this document requires notice and comment. The manual will not effectuate any rule change, but merely provides a general summary of our rules and policies for the public.

30. *Official Source for City-Center Coordinates.* In the *R&O* we amended the rule governing main studio location to allow a station to locate its main studio at any location that is within either the principal community contour of any station, of any service, licensed to its community of license or 25 miles from the reference coordinates of the center of its community of license. For Commission licensing purposes as set forth in section 73.208 of our rules, a community's reference coordinates are generally the coordinates listed in the United States Department of Interior publication entitled ''Index to the National Atlas of the United States'' (''Atlas Index''). An alternative reference point, if none is listed in the Atlas Index, are the coordinates of the main post office. A petitioner argues that the Atlas Index is out-of-date and out-of-print and thus requires replacement.

31. We are not amending section 73.208(a)(1) at this time. We do not believe that this change is necessary at this time and is beyond the scope of this proceeding as it would affect the use of city-center coordinates for other licensing purposes. We do not anticipate many instances involving a discrepancy with city-center coordinates. In the event problems with community coordinates arise, we will address them on a case-by-case basis.

32. *Main Studio Issues.* One petitioner asks that we clarify that stations operating pursuant to a main studio or public file waiver prior to the *R&O* in this proceeding who are now in compliance with our rules, be relieved of special obligations placed on them as a condition of grant of the waiver. It cites to obligations such as regular visits to the community by station management, establishment of a Citizens Advisory Board to meet with station management twice a year, coverage of local events in programming, maintenance of the public file in the community and providing toll-free telephone service to the community which it admits are a restatement of a licensee's obligation under any circumstances. To address these concerns, we clarify that stations whose waivers are moot because their operations now are in compliance with the Commission's rules with respect to main studio location are no longer subject to any conditions placed on them by a previously granted waiver of the main studio or public file rules. These stations are, however, of course obligated to comply with all Commission rules, including those regarding toll-free telephone service and coverage of local issues, just as all other licensees.

33. Another petitioner filed a Petition for Clarification or Declaratory Ruling requesting that noncommercial educational stations that operate as satellite stations pursuant to a main studio waiver be allowed to locate their public files at the main studio of the main ''feeder'' station. In the *R&O*, we stated that all stations, including those operating pursuant to a main studio waiver, would be required to locate their public files at their main studios, wherever located. We hereby clarify that this includes noncommercial educational satellite stations operating under a main studio waiver. These stations must maintain their public files at the main studios of the stations at which their programming is originated, and must provide the accommodation to listeners or residents as required under the amended rules.

III. Administrative Matters

34. *Paperwork Reduction Act of 1995 Analysis.* The action contained herein has been analyzed with respect to the Paperwork Reduction Act of 1995 and found to impose no new or modified reporting and recordkeeping requirements or burdens on the public.

35. *Supplemental Final Regulatory Flexibility Analysis.* As required by the Regulatory Flexibility Act (RFA), an Initial Regulatory Flexibility Analysis (''IRFA'') was incorporated into the *Notice of Proposed Rulemaking,* 62 FR 32061 (June 12, 1997), in this

proceeding. The Commission sought written public comment on the expected impact of the proposed policies and rules on small entities in the Notice, including comments on the IRFA. Based on the comments in response to the Notice, the Commission included a Final Regulatory Flexibility Analysis (''FRFA'') into the *R&O*. While no petitioners seeking reconsideration of the *R&O* raised issues directly related to the FRFA, the Commission is amending the rules in a manner that may affect small entities. Accordingly, this Supplemental Regulatory Flexibility Analysis (''Supplemental FRFA'') addresses those amendments and conforms to the RFA.

36. Need for Action and Objectives of the Rule: The need for and objectives of the modifications adopted in this *MO&O* are the same as those discussed in the Final Regulatory Analysis in the *R&O*. The main studio and public inspection file rules seek to ensure that members of the local community have access to the broadcast stations that are obligated under the FCC's rules to serve them. Our goals here are to relieve undue regulatory burdens on licensees while retaining their basic obligations to serve their communities of license, and adopt a rule that is clear and easy to administer.

B. Summary of Significant Issues Regarding FRFA Raised in Petitions for Reconsideration

37. No parties address the FRFA in their petitions for reconsideration, or any subsequent filings. We note, however, that State Broadcasters claim that the Regulatory Flexibility Act bars the Commission from lawfully adopting any of the new requirements. They argue that the burdens of the ''new requirements'' will violate the RFA, again because they do not provide an exemption for any broadcasters, particularly those who choose not to relocate their public files. Noting how they believe the accommodation provisions will particularly affect small broadcasters, they allege that the Commission has not limited the regulatory burdens placed on small businesses as required by the RFA, and therefore that the public file/political file requirements contradict the intent of the RFA. Our action today modifying the accommodation will alleviate some of the concerns expressed by State Broadcasters. We exempt broadcasters whose main studios and public files are located in the community of license, and narrow the scope of the mailing requirement of the accommodation to persons within the service area of the station. The first exemption will alleviate the burden on some small broadcasters and the second will relieve all broadcasters, including small broadcasters.

C. Description and Estimate of the Number of Small Entities to Which the Rules Will Apply

38. Under the RFA, small entities may include small organizations, small businesses, and small governmental jurisdictions. 5 U.S.C. 601(6). The RFA, 5 U.S.C. 601(3), generally defines the term ''small business'' as having the same meaning as the term ''small business concern'' under the Small Business Act, 15 U.S.C. 632. A small business concern is one which: (1) Is independently owned and operated; (2) is not dominant in its field of operation; and (3) satisfies any additional criteria established by the Small Business Administration (''SBA''). Pursuant to 4 U.S.C. 601(3), the statutory definition of a small business applies ''unless an agency after consultation with the Office of Advocacy of the SBA and after opportunity for public comment, establishes one or more definitions of such term which are appropriate to the activities of the agency and publishes such definition(s) in the **Federal Register**.''

39. As noted, an FRFA was incorporated into the *R&O*. In that analysis, the Commission described in detail the various kinds of small business entities that may be affected by these rules. In this *MO&O*, we address petitions for reconsideration filed in response to the *R&O*. In this Supplemental FRFA, we incorporate by reference the description and estimate of the number of small entities from the previous FRFA in this proceeding.

D. Description of Reporting, Recordkeeping and Other Compliance Requirements

40. The *MO&O* adopts modifications to the rules adopted in the *R&O*, which further modify existing recordkeeping requirements. The *MO&O* declines to repeal the accommodation. The *MO&O*, however, narrows the accommodation to require that only those stations whose public file is located at a main studio outside the city limits of the community of license provide the accommodation. It also revises the accommodation to limit the required mailing area for documents requested by phone to the geographic service area of the station in question. In addition, the item specifically exempts from the accommodation requests for documents from the political file.

41. Regarding document retention, the *MO&O* declines to adopt a requirement that stations retain only applications requiring local public notice. It also declines to delete the rules requiring noncommercial educational stations to retain donors' lists and ownership certifications of ''no change.'' The *MO&O* amends the rule requiring retention of all e-mails pertaining to station operation and limits the retention requirement to e-mails pertaining to station operation sent to a publicly advertised e-mail address, or to station management, specifically excluding the personal e-mails of staff members.

42. The *MO&O* also declines to solicit public comment on ''The Public and Broadcasting'' prior to its issuance, and denies a request that we amend the rule designating the official source for city-center coordinates. In addition, the draft deletes the requirement in the *R&O* that noncommercial educational stations include with their renewal a summary of letters they received through the license term concerning violent programming. It clarifies that stations that were previously granted waivers and that now operate in compliance with the rules are no longer bound by any of the terms of the waiver. It further clarifies that stations operating under a main studio waiver, especially satellite noncommercial educational stations, are required to maintain their public files at their main studio at the station at which their programming originates and must comply with the terms of the accommodation as amended.

43. The *MO&O* restricts the application of the accommodation by geographic scope and volume of material. It reduces which materials are required to be kept in the public file, and clarifies the required retention period for public file materials. No special skills will be necessary to comply with these requirements. This reduces the burden on licensees, both by clearly defining what must be retained, and the period during which it must be retained.

Considered:

44. By narrowing the accommodation to require that only those stations whose public file is located at a main studio outside the city limits of the community of license provide the accommodation, the *MO&O* reduces burdens on small entities who choose not to relocate outside their communities of license. By limiting the accommodation to mailing to persons within the geographic service area of the station in question, the *MO&O* reduces burdens on all licensees, including small entities. In addition, the item specifically exempts from the accommodation requests for documents

from the political file, which will reduce burdens.

45. Amending the rule to exclude personal e-mail of employees and restricting the retention requirement to e-mail sent to a publicized box or to station management reduces burdens on small entities. By relieving stations that were previously granted waivers and that now operate in compliance with the rules of the conditions of their waivers we reduce burdens on small entities who previously were required to take specific steps to accomplish community outreach to are no longer bound by any of the terms of the waiver. By clarifying that stations operating under a main studio waiver, especially satellite noncommercial educational stations, are required to maintain their public files at their main studio at the station at which their programming originates and must comply with the terms of the accommodation as amended, we reduce burdens on those stations of maintaining separate public files.

F. Federal Rules that May Duplicate, Overlap, or Conflict With the Proposed Rules

46. None.

47. Report to Congress: The Commission will send a copy of the *MO&O*, including this SFRFA, in a report to be sent to Congress pursuant to the Small Business Regulatory Enforcement Fairness Act of 1996, see 5 U.S.C. 801(a)(1)(A). In addition, the Commission will send a copy of the *MO&O*, including SFRFA, to the Chief Counsel for Advocacy of the Small Business Administration. A copy of the *Main Studio and Public Inspection File MO&O* and SFRFA (or summaries thereof) will also be published in the **Federal Register**. See 5 U.S.C. 604(b).131.

Ordering Clauses

48. Accordingly, *it is ordered that*, pursuant to the authority contained in Sections 154, 303, and 307 of the Communications Act of 1934, as amended, 47 U.S.C. 154, 303, and 307, 47 CFR 73.3526 and 73.3527 are amended, as set forth in the rule changes.

49. *It is further ordered that*, the rule changes set forth shall be effective 30 days after publication in the **Federal Register**.

50. *It is further ordered* that the Petitions for Reconsideration in this proceeding are granted to the extent described, and are otherwise denied.

51. *It is further ordered* that the Commission's Office of Public Affairs, Reference Operations Division, shall send a copy of this *MO&O*, including the Supplementary Final Regulatory Flexibility Analysis, to the Chief Counsel for Advocacy of the Small Business Administration.

52. *It is further ordered* that upon release of this *MO&O*, this proceeding is hereby terminated.

List of Subjects in 47 CFR Part 73

Radio broadcasting, Television broadcasting.

Federal Communications Commission.

Magalie Roman Salas,

Secretary.

Rule Changes

Part 73 of Title 47 of the Code of Federal Regulations is amended as follows:

PART 73—RADIO BROADCAST SERVICES

1. The authority citation for Part 73 continues to read as follows:

Authority: 47 U.S.C. 154, 303, 334, and 336.

2. § 73.3526 is amended by revising paragraphs (c)(2), and (e)(9) to read as follows:

§ 73.3526 Local public inspection file of commercial stations.

* * * * *

(c) * * *

* * * * *

(2) The applicant, permittee, or licensee who maintains its main studio and public file outside its community of license shall:

(i) Make available to persons within its geographic service area, by mail upon telephone request, photocopies of documents in the file (*see* § 73.3526(c)(1)), excluding the political file (*see* § 73.3526(e)(6)), and the station shall pay postage;

(ii) Mail the most recent version of ''The Public and Broadcasting'' to any member of the public that requests a copy; and

(iii) Be prepared to assist members of the public in identifying the documents they may ask to be sent to them by mail, for example, by describing to the caller, if asked, the period covered by a particular report and the number of pages included in the report.

Note to Paragraph (c)(2): For purposes of this section, geographic service area includes the area within the Grade B contour for TV, 1 mV/m contour for all FM station classes except .7 mV/m for Class B1 stations and .5 mV/m for Class B stations, and .5 mV/m contour for AM stations.

* * * * *

(e) * * *

* * * * *

(9) *Letters and e-mail from the public.* (i) All written comments and suggestions received from the public regarding operation of the station, unless the letter writer has requested that the letter not be made public or when the licensee feels that it should be excluded from public inspection because of the nature of its content, such as a defamatory or obscene letter. Letters and electronic mail messages shall be retained for a period of three years from the date on which they are received by the licensee.

(ii) For purposes of this section, written comments and suggestions received from the public include electronic mail messages transmitted via the internet to station management or an e-mail address publicized by the station. Personal e-mail messages sent to station employees need not be retained. Licensees may retain e-mails either on paper or in a computer file. Licensees who choose to maintain a computer file of e-mails may make the file available to the public either by providing the public with access to a computer terminal at the location of the public file, or providing the public with a copy of such e-mails on computer diskette, upon request. In the case of identical communications, licensees and permittees may retain one sample copy of the letter or electronic mail message together with a list identifying other parties who sent identical communications.

* * * * *

3. § 73.3527 is amended by revising paragraphs (c)(2), and (e)(9), and by revising the first sentence of paragraph (e)(4) to read as follows:

§ 73.3527 Local public inspection file of noncommercial educational stations.

* * * * *

(c) * * *

* * * * *

(2) The applicant, permittee, or licensee who maintains its main studio and public file outside its community of license shall:

(i) Make available to persons within its geographic service area, by mail upon telephone request, photocopies of documents in the file (*see* § 73.3527(c)(1)), excluding the political file (*see* § 73.3527(e)(5)), and the station shall pay postage;

(ii) Mail the most recent version of ''The Public and Broadcasting'' to any member of the public that requests a copy; and

(iii) Be prepared to assist members of the public in identifying the documents they may ask to be sent to them by mail, for example, by describing to the caller, if asked, the period covered by a

particular report and the number of pages included in the report.

Note to Paragraph (c)(2): For purposes of this section, geographic service area includes the area within the protected service contour in a particular service: Grade B contour for TV, 1 mVm contour for all FM station classes except .7 mV/m for Class B1 stations and .5 mV/m for Class B stations, and .5 mV/m contour for AM stations.

* * * * *

(e) * * *

* * * * *

(4) *Ownership reports and related materials.* A copy of the most recent, complete ownership report filed with the FCC for the station, together with any subsequent statement filed with the FCC certifying that the current report is accurate, and together with all related material. * * *

* * * * *

(9) *Donor lists.* The lists of donors supporting specific programs. These lists shall be retained for two years from the date of the broadcast of the specific program supported.

* * * * *

[FR Doc. 99–16831 Filed 7–1–99; 8:45 am]

BILLING CODE 6712–01–U

FEDERAL COMMUNICATIONS COMMISSION

47 CFR Part 76

[CS Docket No. 96–85; FCC 99–57]

Implementation of Cable Act Reform Provisions of the Telecommunications Act of 1996

AGENCY: Federal Communications Commission.

ACTION: Final rule.

SUMMARY: In the *Report and Order,* the Commission implemented provisions of the 1996 Telecommunications Act that reform several parts of Title VI of the Communications Act of 1934, including sections on effective competition to a cable system, small cable operator rules, uniform rate requirements, technical standards, and the sunset of the Commission's role in regulating rates on the cable service programming tier.

DATES: Effective August 31, 1999 except for sections 76.952 and 76.990 which contain information collection requirements that have not been approved by the Office of Management and Budget (''OMB''). The Commission will publish a document in the **Federal Register** announcing the effective date of those sections. Written comments by the public on the information collection requirements are due August 2, 1999. Written comments must be submitted by OMB on the information collection requirements on or before August 31, 1999.

ADDRESSES: A copy of any comments on the information collections contained herein should be submitted to Judy Boley, Federal Communications Commission, Room 1-C804, 445 12th Street, SW, Washington, DC 20554, and to Timothy Fain, OMB Desk Officer, 10236 NEOB, 725—17th Street, NW, Washington, DC 20503.

FOR FURTHER INFORMATION CONTACT: Peggy Greene or Nancy Stevenson, Cable Services Bureau (202) 418–7200, TTY (202) 418–7172. For additional information concerning the information collections contained in this *Report and Order,* contact Judy Boley at 202–418–0214, or via the Internet at jboley@fcc.gov.

SUPPLEMENTARY INFORMATION: This is a synopsis of the Commission's *Report and Order* in CS Docket No. 96–85, FCC 99–57, adopted March 25, 1999, and released March 29, 1999. The complete text of the *Report and Order* is available for inspection and copying during normal business hours in the FCC Reference Center, and may also be purchased from the Commission's copy contractor, International Transcription Service (''ITS, Inc.''), (202) 857–3800, 1231 20th Street, NW, Washington, DC 20036. In addition, the complete text of the *Report and Order* is available on the Internet at http://www.fcc.gov/Bureaus/Cable/Orders/1999/fcc99057.txt.

Paperwork Reduction Act

This *Report and Order* has been analyzed with respect to the Paperwork Reduction Act of 1995 (the ''1995 Act'') and found to impose new or modified information collection requirements on the public. The Commission, as part of its continuing effort to reduce paperwork burdens, invites the general public to take this opportunity to comment on the information collection requirements contained in this *Report and Order,* as required by the 1995 Act. Public comments are due August 2, 1999. Written comments must be submitted by OMB on or before August 31, 1999. Comments should address: (a) whether the proposed collection of information is necessary for the proper performance of the functions of the Commission, including whether the information shall have practical utility; (b) the accuracy of the Commission's burden estimates; (c) ways to enhance the quality, utility, and clarity of the information collected; and (d) ways to minimize the burden of the collection of information on the respondents, including the use of automated collection techniques or other forms of information technology.

OMB Approval Number: 3060–0706.

Title: Cable Act Reform.

Type of Review: Revision of existing collection.

Respondents: Business and for-profit entities; state, local and tribal governments.

Number of Respondents: 950.

Estimated Time per Response: 1–8 hours.

Total Estimated Annual Burden to Respondents: 3,900 hours.

Total Estimated Annual Cost to Respondents: $4,100.

Needs and Uses: The notice, filing and third-party disclosure requirements accounted for in OMB 3060–0706 serve a variety of purposes for subscribers, cable operators, franchising authorities and the Commission. For example, pursuant to section 76.952, franchising authority contact information is furnished on monthly billing statements and is used by cable subscribers when wanting to inquire about cable matters in their community. Franchising authorities have the option to not have this information furnished on billing statements if they so choose. The filing of a written request to the cable operator facilitates this option. Pursuant to section 76.990, a small cable operator may certify in writing to its franchising authority that it meets the criteria to qualify as a small operator. The information filed as part of the certification is reviewed by the franchising authority to determine whether the operator qualifies for deregulation as a small cable operator. Pursuant to section 76.1404, copies of contract information are filed with the Commission for a determination of whether use of a cable operator's facilities by a local exchange carrier is reasonably limited in scope and duration.

OMB Approval Number: 3060–0549.

Title: Cable Programming Services Complaints (FCC Form 329).

Type of Review: Revision of existing collection.

Respondents: Individuals; state, local and tribal governments.

Number of Respondents: 1,300.

Estimated Time per Response: 45 minutes.

Total Estimated Annual Burden to Respondents: 1,200 hours.

Total Estimated Annual Cost to Respondents: $3,200

Needs and Uses: The data are used by Commission staff to examine the reasonableness of a cable operator's rates for programming service or

associated equipment prior to the March 31, 1999 sunset of CPST rate regulation. The filing of FCC Form 329 initiates an investigation of a cable systems's rates for cable programming service.

Synopsis of the Report and Order

The Commission's Report and Order implements provisions of the Telecommunications Act of 1996 (''1996 Act'') that reform several parts of the Cable Television Consumer Protection and Competition Act of 1992 (''1992 Cable Act''). These are generally known as the ''Cable Reform'' provisions. The *Report and Order* also includes information about the sunset of the Commission's role in regulating rates on the cable service programming tier (''CPST''). The Cable Reform provisions include sections on effective competition to a cable system, small cable operator rules, uniform rate requirements, technical standards and subscriber notice.

2.*Key findings*:

• *CPST rate regulation sunset:* Pursuant to section 623 of the 1996 Act, rates for CPST services provided after March 31, 1999 will not be subject to Commission review and regulation. The Commission will continue to process complaints regarding rates for services provided prior to March 31, 1999.

• *Effective Competition:* The statute provides that a cable operator's rates are not regulated if the cable system is subject to effective competition. The 1996 Act added a new effective competition test addressing competition from local exchange carriers (''LECs''), LEC affiliates, or multichannel video programming distributors using LEC facilities. The Commission determined that effective competition will be found if a LEC's service offering substantially overlaps the incumbent cable operator's service in the same franchise area. Potential as well as actual LEC service can be considered. The 1996 Act also requires that the LEC's programming service be comparable to the incumbent cable operator's service. The Commission adopted the definition used for the competing provider test for effective competition, which specifies that comparable service must include at least 12 channels of video programming, including at least one hannel of nonbroadcast service. The *Report and Order* provides that all effective competition cases, other than petitions for reconsideration of LFA certifications to regulate rates, will be resolved as petitions for determinations of effective competition under the Commission's special relief procedures. This will ensure uniform procedures, including use of the public notice provisions. The Commission retained its rule for handling petitions for reconsideration of LFA certifications, which includes an automatic stay provision so that erroneous certifications can be addressed before the LFA starts regulating rates.

• *Small Cable Operators:* Under the statute, small cable operators meeting certain criteria are exempted from some rate regulation. In addition to cable programming services, the exemption applies to a basic service tier (''BST'') that was the only service tier subject to regulation as of December 31, 1994 in any franchise area in which that operator services 50,000 or fewer subscribers. A small cable operator is ''a cable operator that, directly or through an affiliate, serves in the aggregate fewer than one percent (1%) of all subscribers in the United States and is not affiliated with any entity or entities whose gross annual revenues in the aggregate exceed $250,000,000.'' The Commission decided that the BST exemption is not lost if the operator created additional tiers of service after December 31, 1994. An affiliation exists when an entity owns an active or passive equity interest of 20% or more in the cable operator or holds de facto control over the operator. Purely passive investment, however, will not be treated as an affiliation. Implementing the Cable Reform provisions does not affect the Commission's small system cost of service rules. The *Report and Order* concludes that the Commission lacks the discretion to maintain an operator's small operator status once it no longer meets the eligibility requirements in the statute. The *Report and Order* allows operators losing their eligibility to maintain the rates prevailing prior to the loss of eligibility and to implement rate increases pursuant to the generally applicable rate regulations. To prevent cable operators from imposing large rate increases in anticipation of a change in status, the *Report and Order* requires cable operators to demonstrate that their rates were in effect for three months prior to the loss of small cable status.

• *Uniform Rate Requirement:* Under the statute, unless a cable operator is subject to effective competition, its rates must be uniform throughout the franchise area. The statute provides a limited exception for bulk discounts to multiple dwelling units (''MDUs'') so that cable operators can respond to competition in individual MDUs by offering lower prices. The *Report and Order* concludes that a bulk discount is a volume discount available to all residents of the MDU. The operator can offer the discount directly to residents; negotiation about the rate with the MDU owner or manager is not required.

• *Technical Standards:* The 1996 Act retains the requirement that the Commission establish minimum technical standards for cable systems' technical operation and signal quality and adds that no state or franchising authority may prohibit, condition, or restrict a cable system's use of any type of subscriber equipment or any transmission technology. The *Report and Order* concludes that LFA oversight and enforcement of the Commission's technical standards is permitted but that LFAs cannot impose technical standards different from the Commission's technical standards. The *Report and Order* also finds that transmission technology includes, for example, an operator's use of digital or analog transmissions and its use of coaxial cable, fiber optic cable, or microwave facilities. The *Report and Order* also acknowledges the LFA's important role in determining local needs and access channel requirements, requiring institutional networks, reviewing an operator's qualifications, and managing public rights of way.

• *Subscriber Notice:* The 1996 Act provides that a cable operator may provide notice of service and rate changes using any reasonable written means at its sole discretion. The item concludes that Congress intended to limit the Commission's discretion in this area but did not completely eliminate the role of regulatory authorities. LFAs and the Commission retain the authority to determine that a particular mechanism is not reasonable.

Ordering Clauses

3. *Accordingly*, It is ordered that, pursuant to sections 4(i), 4(j), 303(r), as amended, 47 U.S.C. 154(i), 154(j), 303(r), and the Telecommunications Act of 1996, sections 301 and 302, the requirements and policies discussed in this *Report and Order, Are amended* as set forth below.

It is further ordered that the requirements and regulations established in this decision shall become effective upon approval by OMB of the new information collection requirements adopted herein, but no sooner than 60 days after publication in the **Federal Register**.

5. *It is further ordered* that the Commission's Office of Public Affairs, Reference Operations Division, *Shall send* a copy of this *Report and Order*, including the Final Regulatory Flexibility Analysis, to the Chief Counsel for Advocacy of the Small Business Administration.

List of Subject in 47 CFR Part 76

Cable Television.

Federal Communications Commission.

Shirley Suggs,

Chief, Publication Branch.

Rule Changes

For the reasons discussed in the preamble, The Federal Communications Commission amends 47 CFR Part 76 as follows:

PART 76—MULTICHANNEL VIDEO AND CABLE TELEVISION SERVICE

1. The authority citation for Part 76 continues to read as follows:

Authority: 47 U.S.C. 151, 152, 153, 154, 301, 302, 303, 303a, 307, 308, 309, 312, 315, 317, 325, 503, 521, 522, 531, 532, 533, 534, 535, 536, 537, 543, 544, 544a, 545, 548, 549, 552, 554, 556, 558, 560, 561, 571, 572, 573.

2. Section 76.701 is amended by adding a new note to paragraph (b) to read as follows:

§ 76.701 Leased access channels.

* * * * *

Note to paragraph (b): ''Nudity'' in paragraph (b) is interpreted to mean nudity that is obscene or indecent.

3. Section 76.901 is amended by adding a new paragraph (f) to read as follows:

§ 76.901 Definitions.

* * * * *

(f) *Small cable operator.* A small cable operator is an operator that, directly or through an affiliate, serves in the aggregate fewer than 1 percent of all subscribers in the United States and is not affiliated with any entity or entities whose gross annual revenues in the aggregate exceed $250,000,000. For purposes of this definition, an operator shall be deemed affiliated with another entity if that entity holds a 20 percent or greater equity interest (not including truly passive investment) in the operator or exercises de jure or de facto control over the operator.

Note 1 to paragraph (f): Using the most reliable sources publicly available, the Commission periodically will determine and give public notice of the subscriber count that will serve as the 1 percent threshold until a new number is calculated.

Note 2 to paragraph (f): For a discussion of passive interests with respect to small cable operators, see Implementation of Cable Act Reform Provisions of the Telecommunications Act of 1996, Report and Order in CS Docket No. 96–85, FCC 99–57 (released March 29, 1999).

Note 3 to paragraph (f): If two or more entities unaffiliated with each other each hold an equity interest in the small cable operator, the equity interests of the unaffiliated entities will not be aggregated with each other for the purpose of determining whether an entity meets or passes the 20 percent affiliation threshold.

4. Section 76.905 is amended by revising paragraph (g) to read as follows:

§ 76.905 Standards for identification of cable systems subject to effective competition.

* * * * *

(g) In order to offer comparable programming as that term is used in this section, a competing multichannel video programming distributor must offer at least 12 channels of video programming, including at least one channel of nonbroadcast service programming.

5. Section 76.907 is added to read as follows:

§ 76.907 Petition for a determination of effective competition.

(a) A cable operator (or other interested party) may file a petition for a determination of effective competition with the Commission pursuant to the Commission's procedural rules in § 76.7.

(b) The cable operator bears the burden of rebutting the presumption that effective competition does not exist with evidence that effective competition, as defined in § 76.905, exists in the franchise area.

Note to paragraph (b): The criteria for determining effective competition pursuant to § 76.905(b)(4) are described in Implementation of Cable Act Reform Provisions of the Telecommunications Act of 1996, Report and Order in CS Docket No. 96–85, FCC 99–57 (released March 29, 1999).

(c) If the evidence establishing effective competition is not otherwise available, cable operators may request from a competitor information regarding the competitor's reach and number of subscribers. A competitor must respond to such request within 15 days. Such responses may be limited to numerical totals. In addition, with respect to petitions filed seeking to demonstrate the presence of effective competition pursuant to § 76.905(b)(4), the Commission may issue an order directing one or more persons to produce information relevant to the petition's disposition.

6. Section 76.911 is amended by removing paragraph (b); redesignating paragraphs (c) through (e) as paragraphs (b) through (d); and by revising paragraphs (a) and (a)(1) to read as follows:

§ 76.911 Petition for reconsideration of certification.

(a) A cable operator (or other interested party) may challenge a franchising authority's certification by filing a petition for reconsideration pursuant to § 1.106. The petition may allege either of the following:

(1) The cable operator is not subject to rate regulation because effective competition exists as defined in § 76.905. Sections 76.907(b) and (c) apply to petitions filed under this section.

* * * * *

§ 76.915 [Removed]

7. Section 76.915 is removed.

8. Add a note to § 76.934 to read as follows:

§ 76.934 Small systems and small cable companies

* * * * *

Note to § 76.934: For rules governing small cable operators, see § 76.990 of this subpart.

9. Section 76.950 is amended by revising paragraph (b) to read as follows.

§ 76.950 Complaints regarding cable programming service rates.

* * * * *

(b) This section shall not apply to cable programming services provided after March 31, 1999.

10. Section 76.952 is amended by revising paragraph (a) to read as follows:

§ 76.952 Information to be provided by cable operator on monthly subscriber bills.

(a) The name, mailing address and phone number of the franchising authority, unless the franchising authority in writing requests the cable operator to omit such information.

* * * * *

11. Section 76.956 is amended by revising paragraph (a) to read as follows:

§ 76.956 Cable operator response.

(a) Unless otherwise directed by the local franchising authority, a cable operator must file with the local franchise authority a response to the complaint. The response shall indicate when the cable operator received notice of the complaint. Service by mail is complete upon mailing. See § 1.47(f) of this chapter. The response shall include the information required by the appropriate FCC form, including rate cards, channel line-ups, and an explanation of any discrepancy in the figures provided in these documents and the rate filing. The cable operator must file its response with the local franchise authority via first class mail.

* * * * *

12. Section 76.961 is amended by revising paragraph (b) to read as follows:

§ 76.961 Refunds.

* * * * *

(b) The cumulative refund due subscribers shall be calculated from the date of the first complaint filed with the franchising authority until the date a cable operator implements a prospective rate reduction as ordered by the Commission pursuant to § 76.960. The Commission shall calculate refund liability according to the rules in effect for determining the reasonableness of the rates for the period of time covered by the complaint.

* * * * *

13. Section 76.984 is amended by removing the last sentence of paragraph (b); revising paragraph (c)(2), adding paragraph (c)(3) and adding notes 1 and 2 to paragraph (c)(3) to read as follows:

§ 76.984 Geographically uniform rate structure.

* * * * *

(c)(2) Any video programming offered on a per channel or per program basis.

(c)(3) Bulk discounts to multiple dwelling units shall not be subject to this section, except that a cable operator of a cable system that is not subject to effective competition may not charge predatory prices to a multiple dwelling unit. Upon a prima facie showing by a complainant that there are reasonable grounds to believe that the discounted price is predatory, the cable system shall have the burden of showing that its discounted price is not predatory.

Note 1 to paragraph (c)(3): Discovery procedures for predatory pricing complaints. Requests for discovery will be addressed pursuant to the procedures specified in § 76.7(f).

Note 2 to paragraph (c)(3): Confidential information. Parties submitting material believed to be exempt from disclosure pursuant to the Freedom of Information Act (FOIA), 5 U.S.C. 552(b), and the Commission's rules, § 0.457 of this chapter, should follow the procedures in § 0.459 of this chapter and § 76.9.

14. Section 76.990 is added to read as follows:

§ 76.990 Small cable operators.

(a) Effective February 8, 1996, a small cable operator is exempt from rate regulation on its cable programming services tier, or on its basic service tier if that tier was the only service tier subject to rate regulation as of December 31, 1994, in any franchise area in which that operator services 50,000 or fewer subscribers.

(b) *Procedures.* (1) A small cable operator, may certify in writing to its franchise authority at any time that it meets all criteria necessary to qualify as a small operator. Upon request of the local franchising authority, the operator shall identify in writing all of its affiliates that provide cable service, the total subscriber base of itself and each affiliate, and the aggregate gross revenues of its cable and non-cable affiliates. Within 90 days of receiving the original certification, the local franchising authority shall determine whether the operator qualifies for deregulation and shall notify the operator in writing of its decision, although this 90-day period shall be tolled for so long as it takes the operator to respond to a proper request for information by the local franchising authority. An operator may appeal to the Commission a local franchise authority's information request if the operator seeks to challenge the information request as unduly or unreasonably burdensome. If the local franchising authority finds that the operator does not qualify for deregulation, its notice shall state the grounds for that decision. The operator may appeal the local franchising authority's decision to the Commission within 30 days.

(2) Once the operator has certified its eligibility for deregulation on the basic service tier, the local franchising authority shall not prohibit the operator from taking a rate increase and shall not order the operator to make any refunds unless and until the local franchising authority has rejected the certification in a final order that is no longer subject to appeal or that the Commission has affirmed. The operator shall be liable for refunds for revenues gained (beyond revenues that could be gained under regulation) as a result of any rate increase taken during the period in which it claimed to be deregulated, plus interest, in the event the operator is later found not to be deregulated. The one-year limitation on refund liability will not be applicable during that period to ensure that the filing of an invalid small operator certification does not reduce any refund liability that the operator would otherwise incur.

(3) Within 30 days of being served with a local franchising authority's notice that the local franchising authority intends to file a cable programming services tier rate complaint, an operator may certify to the local franchising authority that it meets the criteria for qualification as a small cable operator. This certification shall be filed in accordance with the cable programming services rate complaint procedure set forth in § 76.1402. Absent a cable programming services rate complaint, the operator may request a declaration of CPST rate deregulation from the Commission pursuant to § 76.7.

(c) *Transition from small cable operator status.* If a small cable operator subsequently becomes ineligible for small operator status, the operator will become subject to regulation but may maintain the rates it charged prior to losing small cable operator status if such rates (with an allowance for minor variations) were in effect for the three months preceding the loss of small cable operator status. Subsequent rate increases following the loss of small cable operator status will be subject to generally applicable regulations governing rate increases.

Note to § 76.990: For rules governing small cable systems and small cable companies, see § 76.934.

15. Section 76.1401 is amended by removing paragraphs (a), (c), and (d) and by removing the designation from paragraph (b).

§ 76.1403 [Removed]

16. Section 76.1403 is removed.

17. Section 76.1603 is amended by revising paragraph (e) to read as follows:

§ 76.1603 Written notification of changes in rates and services.

* * * * *

(e) To the extent the operator is required to provide notice of service and rate changes to subscribers, the operator may provide such notice using any reasonable written means at its sole discretion.

* * * * *

[FR Doc. 99–16955 Filed 7–1–99; 8:45 am]

BILLING CODE 6712–01–P

Proposed Rules

Federal Register
Vol. 64, No. 127
Friday, July 2, 1999

This section of the FEDERAL REGISTER contains notices to the public of the proposed issuance of rules and regulations. The purpose of these notices is to give interested persons an opportunity to participate in the rule making prior to the adoption of the final rules.

MERIT SYSTEM PROTECTION BOARD

5 CFR Part 1204

Availability of Official Information

AGENCY: Merit System Protection Board.

ACTION: Proposed rule; request for comments.

SUMMARY: The Merit System Protection Board proposes to amend its rules regarding the availability of official information to comply with the Electronic Freedom of Information Act Amendments of 1996, to update the fee schedule, and to add a time limit to ask for review by the Board's Chairman of an action or a failure to act under this part. Certain other changes are proposed to update the rules on the availability of official information for the benefit of the Board's customers, for consistency, and to comply with the President's Memorandum on Plain Language in Government Writing.

DATES: Comments must be received by August 31, 1999.

ADDRESSES: Send comments to Shannon McCarthy, Deputy Clerk of the Board, Merit System Protection Board, 1120 Vermont Avenue, NW, Washington, DC 20419. Comments may be sent via e-mail to mspb@mspb.gov or faxed to (202) 653–7130..

FOR FURTHER INFORMATION CONTACT: Robert E. Taylor, Clerk of the Board, (202) 653–7200.

SUPPLEMENTARY INFORMATION: The Electronic Freedom of Information Act Amendments of 1996 (Pub. L. 104–231, 110 Stat. 3048) were enacted to ensure public access to agency records and information, improve public access to agency records and information, ensure agency compliance with statutory time limits, and maximize the usefulness of agency records and information collected, maintained, used, retained, and disseminated by the Federal Government. The Board, therefore, proposes to amend its regulations implementing 5 U.S.C. 552 (the Freedom of Information Act) to accommodate the requirements of the amendments.

The Board also proposes to update its rules on computing and collecting fees charged requesters for services provided in processing requests for information to produce a more realistic schedule.

In addition, the Board proposes to update various rules to reflect changes in regional realignments of the Merit Systems Protection Board, to make other changes for consistency and grammatical reasons, and to comply with the President's Memorandum, ''Plain Language in Government Writing,'' 34 Weekly Comp. Pres. Doc. 1010 (June 1, 1998).

Section-by-Section Guide to Proposed Changes

The following paragraphs are a section-by-section guide to the changes that would be made in 5 CFR part 1204 by the proposed amendment.

The authority citation for part 1204 would be amended to include Pub. L. 104–231.

The words ''as amended'' would be added after 5 U.S.C. 552 in section 1204.1 to show the updated citation.

Section 1204.2(a) would be amended to define ''record'' to match the definition in 5 U.S.C. 552(f)(2). Subsection (c) would be amended to include the term ''video tape'' as a form of a verbatim record. Subsection (d) would be amended to reflect the requirement of the amended 5 U.S.C. 552(a)(2)(D) to make records available for public inspection and copying, regardless of form or format, that the agency determines have become or are likely to become the subject of additional requests for mainly the same records and a general index of those records.

Section 1204.11(c) would be amended to extend the time to decide a request from 10 days to 20 days because of the amendment to 5 U.S.C. 552(a)(6)(A)(i). Section 1204.11(c)(1) would be amended to show the new requirement of 5 U.S.C. 552(a)(6)(B) allowing an extension for no more than 10 days if there are ''unusual circumstances'' as defined by the law. The section would require that: (a) written notice be given to the requester describing the ''unusual circumstances'' and stating a date on which a determination on the request will be made; and (b) the requester be given an opportunity to limit the range of the request in order to process the request within the time limit, or an opportunity to arrange another time frame for processing the request or a changed request. Section 1204.11(c)(2) would provide for a decision on the expedited processing of a request within 10 days if a ''compelling need'' is shown and for other cases determined by the Board as required by the amended 5 U.S.C. 552(a)(6)(E). The section would state that if the Board grants a request for expedited processing, it will process the request within 5 workdays from the date of the decision to grant the expedited request. If the Board decides that it requires the normal or additional time to process the request or if it decides that good cause for expedited processing has not been shown, it will give written notice to the requester and will inform the requester of the right to administrative and court review of the decision. The section would further require that proof of compelling need be made by a statement certified to be true to the best of the requester's knowledge and belief.

Section 1204.12(a) would be changed to show the increased estimated cost to the Board of processing Freedom of Information Act requests. The Board would continue to charge fees for services but it would not charge requesters a fee where the processing cost is less than $100 and would move the revised sentence to subsection (b).

Subsection (b)(1) would change the modifier of ''employee'' from ''the'' to ''each'' to show that more than one employee may work on a request. The direct costs to the Board and charged to a requester would be increased from the basic rate of pay of an employee's hourly rate of pay plus 16 percent to the rate of $5 per quarter hour spent by each Board employee. The statutory definition of the term ''search'' would be added to subsection (b)(2), along with a statement that the Board will make reasonable efforts to locate the records in electronic form or format except when the effort would significantly interfere with the operation of the Board's automated information system. Subsection (b)(3) would be amended to ensure that ''electronically maintained information'' is included among ''documents'' and that the amendment agrees with the amended 5 U.S.C. 552(a)(3)(B) by stating that the Board will make a reasonable effort to maintain its records informs or formats

that can be copied and will provide a copy in the form or format requested if the record can be copied in that form or format.

Subsection (d) would change the allowance which provides requesters the first hundred pages and the first two hours of duplication of search time without charge to provide that the Board will not charge the requester if the fee for any request is less than $100 (the cost to the Board of processing and collecting the fee). To better represent the actual costs to the Board, subsection (e)(1) would change the rate charged for document searches from $3.75 for each quarter of an hour to a rate of $5 per quarter hour spent by each Board employee doing the search. Subsection (e)(2) would change the rate charged for computer searches from 90 cents per computer minute to $5 per quarter hour spent by each Board employee operating the computer equipment and/or developing a new inquiry or report. Subsection (e)(3) would show the actual cost of the reviewing employee's time for commercial use requests by changing the fee from $8.50 an hour to a rate equal to $5 per quarter hour spent by each reviewing employee. Subsection (e)(4) also would be amended to show actual costs to the Board by: (1) changing the photocopying cost from 10 cents a page to 20 cents a page; (2) changing the cost to copy a cassette tape from $5.75 to the direct cost not to exceed $15 per cassette tape; (3) adding that the direct cost to the Board to copy video tapes is not to exceed $20 a tape; and (4) changing the fixed costs charged to copy records on computer tapes and per diskette for records on computer diskette ($21 and $2.70, respectively) to $25 and $4 respectively, if it is feasible for the Board to copy records in the format requested. Because of the costs to the Board, the Board would charge a fee of $4 per page for each page showing the Board's seal and attestation for certified copies of the Board's records. Because of increased processing costs for requests, the Board would raise the amount exceeding which a requester will be notified on the estimated amount from $25 to $100. Section (d) would be eliminated because of the change in the minimal charge for a Board request.

Section 1204.13 would be amended to add subsections (a) and (b). Subsection (a) would add two items, a request for expeditious processing based on the requester's compelling need, and a request that records be provided in a specific electronic format to the list of requests that the Board may deny. To match the amended 5 U.S.C. 552(a)(6)(F), subsection (b) would provide that if the Board applies one or more of the exemptions under 5 U.S.C. 552(b), it will identify for the requester the specific exemption(s), provide an explanation in writing as to why the exemption(s) must be applied to withhold the requested information, and give an estimate of the amount of material that has been denied to the requester, unless providing such an estimate would harm an interest protected by the exemptions.

Section 1204.15 would be added to show longtime Board procedure. The section would indicate that requests for Board records that were created by another agency may, in certain circumstances, be discussed with that agency and that, in such instances, the Board will notify the requester.

Section 1204.21(a) would add to appealable decisions the Board's finding that it cannot reproduce electronically maintained information in the requester's preferred format, the Board's determination that it will not provide expedited processing of a request for information under this part, and any failure to decide a request for expedited processing within 10 workdays from the date of the request. Section 1204.21(b) would add a time limit of 10 workdays to file an appeal with the Board's Chairman.

Sections 1204.2(c), 1204.11(c), 1204.12(f)(1), and 1204.21(a) would correct the titles of the Board's judges and chief judges of field offices. Section 1204.2(d) and 1204.11(a) would show the Board's World Wide Web site address and section 1204.2(d), 1204.11(a), and 1204.21(b) would update the Board's headquarters' address. Sections 1204.12(b)(2); 1204.14(a), (b)(2), (c), (d)(1), (d)(2), (d)(3), and (f); and 1204.22 provide changes for clarity and grammatical correctness.

List of Subjects in 5 CFR Part 1204

Confidential business information, Freedom of information, Privacy.

Accordingly, the Board proposes to revise 5 CFR part 1204 to read as follows:

PART 1204—AVAILABILITY OF OFFICIAL INFORMATION

Subpart A—Purpose and Scope

Sec.
1204.1 Purpose.
1204.2 Scope.

Subpart B—Procedures for Obtaining Records under the Freedom of Information Act

1204.11 Requests for Board records.
1204.12 Fees.
1204.13 Denials.
1204.14 Requests for access to confidential commercial information.
1204.15 Records of other agencies.

Subpart C—Appeals

1204.21 Submission.
1204.22 Decision on appeal.

Authority: 5 U.S.C. 552 and 1204, Pub. L. 99–570, Pub. L. 104–231, and E.O. 12600.

Subpart A—Purpose and Scope

§ 1204.1 Purpose.

This part implements the Freedom of Information Act (FOIA), 5 U.S.C. 552, as amended, by stating the procedures to follow when requesting information from the Board, and by stating the fees that will be charged for that information.

§ 1204.2 Scope.

(a) For the purpose of this part, the term ''record'' and any other term used in reference to information includes any information that would be a Board record subject to the requirements of 5 U.S.C. 552 when maintained by the Board in any format including an electronic format. All written requests for information that are not processed under part 1205 of the Board's regulations will be processed under this part. The Board may continue, without complying with this part, to furnish the public with the information it has furnished in the regular course of performing its official duties, unless furnishing the information would violate the Privacy Act of 1974, 5 U.S.C. 552a, or another law.

(b) When the subject of the record, or the subject's representative, requests a record from a Privacy Act system of records, as that term is defined by 5 U.S.C. 552a(a)(5), and the Board retrieves the record by the subjects name or other personal identifier, the Board will handle the request under the procedures and fees shown in 5 CFR part 1205. When a third party requests access to those records, without the written consent of the subject of the record, the Board will handle the request under this part.

(c) When a party to an appeal requests a copy of a tape recording, video tape, or transcript (if one has been prepared) of a hearing that the Board or a judge held under part 1201 or part 1209 of this chapter, the Board will handle the request under 5 CFR 1201.53. When someone other than a party to the appeal makes this request, the Board will handle the request under this part.

(d) In accordance with 5 U.S.C. 552(a)(2), the Board's final opinions and orders (including concurring and dissenting opinions), those statements of policy and interpretations adopted by

the Board and that are not published in the **Federal Register**, administrative staff manuals and instructions to staff that affect a member of the public, and agency records processed and disclosed in response to a FOIA request that the Board determines have been or are likely to become the subject of additional requests for basically the same records and a general index of those records, are available for public review and copying in the Board's Headquarters' Library, 1120 Vermont Avenue NW., Washington, DC 20419–0001, and on the Board's World Wide Web site at http://www.mspb.gov.

Subpart B—Procedures for Obtaining Records Under the Freedom of Information Act

§ 1204.11 Request for Board records.

(a) *Sending a request.* A person may request a Board record under this part by writing to the office that has the record. If the requestor believes that the records are located in a regional office, the request must be sent to that office. A list of the addresses of the Board's regional and field offices are in appendix II of 5 CFR part 1201 and on the Board's World Wide Web site at http://www.mspb.gov. Other requests must be sent to the Clerk of the Board, 1120 Vermont Avenue NW., Washington, DC 20419–0001. Requests sent under this part must be clearly marked ''Freedom of Information Act Request'' on both the envelope and the request.

(b) *Description.* A request must describe the records wanted in enough detail for Board employees to locate the records with no more than a reasonable effort. Whenever possible, a request must include specific information about each record, such as the date, title or name, author, recipient, and subject matter of the record. In addition, if the request asks for records on cases decided by the Board, it must show the title of the case, the MSPB docket number, and the date of the decision.

(c) *Time limits and decisions.* If a request is not properly labeled or is sent to the wrong office, the time for processing the request will begin when the proper office receives it. Requests to the Board's headquarters will be decided by the Clerk of the Board. Requests to one of the regional or field offices will be decided by the Regional Director or Chief Administrative Judge. The Board will decide a request within 20 workdays after the appropriate office receives it, except under the conditions that follow:

(1) *Extension of time.* If ''unusual circumstances'' exist, the Board may extend the time for deciding the request by no more than 10 additional workdays. An example of unusual circumstances could be the need to find and retrieve records from regional or field offices or from federal records centers or the need to search, collect and or examine a large number of records which are demanded in a single request, or the need to talk to another agency with a substantial interest in the determination of the request. When the Board extends the time to decide the request, it will inform the requester in writing and describe the ''unusual circumstances'', and it will state a date on which a decision on the request will be made. If the ''unusual circumstances'' are such that the Board cannot comply with the request within the time limit, the Board will offer the requester an opportunity:

(i) To limit the request so that it may be processed within the time limit, or

(ii) To arrange with the Board a different time frame for processing the request or a changed request.

(2) *Expedited processing.* Where a requester shows a ''compelling need'' and in other cases determined by the Board, a decision whether to provide expedited processing of a request and notification of that decision to the requester will be made within 10 workdays of the date of the request. An example of a compelling need could be that a failure to obtain the records expeditiously could reasonably be expected to be a threat to the life or physical safety of a person or that there is urgency to inform the public about actual or alleged Federal Government activity by a person primarily engaged in distributing information. Where the Board approves expeditious processing, the Board will process the request within 5 workdays from the date of the decision to grant the expeditious processing. If, in order to fully satisfy the request, the Board requires the standard or additional processing time, or if it decides that good cause for expedited processing has not been made, it will provide written notice of its decision to the requester and will inform the requester of the right to administrative and court review of the decision. A showing of a compelling need must be made by a statement certified to be true to the best of the requester's knowledge and belief.

§ 1204.12 Fees.

(a) *General.* The Board will charge the requester fees for services provided in processing requests for information. Those fees will be charged according to the schedule in paragraph (d) of this section, and will recover the full allowable direct costs that the Board incurs. Fees may be charged for time spent searching for information, even if the Board fails to locate responsive records, and even if it determines that the information is exempt from disclosure.

(b) *Definitions.* (1) The term *direct costs* means the costs to an agency for searching for and copying (and in the case of commercial requesters, reviewing) documents to respond to a FOIA request. Direct costs include, for example, the salary of each employee performing work at the rate of $5 per quarter hour. Overhead expenses, such as costs of space and of heating or lighting the facility in which the records are stored, are not included in direct costs.

(2) The term *search*, as defined by 5 U.S.C. 552(a)(3)(D), means either manual or automated review of Board records to locate those records asked for, and includes all time spent looking for material in response to a request, including page-by-page or line-by-line identification of material within documents. Searches will be done in the most efficient and least expensive way to limit costs for both the Board and the requester. Searches may be done manually or by computer using existing programming. The Board will make a reasonable effort to search for the records in electronic form or format, except when such effort would interfere to a large extent with the operation of the Board's automated information system.

(3) The term *duplication* means the process of copying a document or electronically maintained information in response to a FOIA request. Copies can take the form of paper, microfilm, audio-visual materials, or machine-readable documentation (e.g., magnetic tape or disk), among others. The copy provided will be in a form or format requested if the record is readily reproducible by the Board in that form or format. The Board will make a reasonable effort to maintain its records in forms or formats that are reproducible.

(4) The term *review* includes the process of examining documents to determine whether any portion of them may be exempt from disclosure under the FOIA, when the documents have been located in response to a request that is for a commercial use. The term also includes processing any documents for disclosure, e.g., doing all that is necessary to edit them and otherwise prepare them for release. Review does not include time spent resolving general legal or policy issues.

(5) The term *commercial use request* means a request from or on behalf of one who seeks information for a use or purpose that furthers the commercial, trade, or profit interests of the requester or the person on whose behalf the request is made. In deciding whether a requester properly belongs in this category, the Board will decide the use the requester will make of the documents requested. Also, where the Board has reasonable cause to doubt the use a requester will make of the records requested, or where that use is not clear from the request, the Board will seek additional clarification before assigning the request to a specific category.

(6) The term *educational institution* means a preschool, a public or private elementary or secondary school, an institution of graduate higher education, an institution of undergraduate higher education, an institution of professional education, or an institution of vocational education that operates a program or programs of scholarly research.

(7) The term *noncommercial scientific institution* means an institution that is not operated on a ''commercial'' basis as that term is used above, and that is operated solely for the purpose of conducting scientific research whose results are not intended to promote any particular product or industry.

(8) The term *representative of the news media* means any person actively gathering news for an entity that is organized and operated to publish or broadcast news to the public. The term ''news'' means information that concerns current events or that would be of current interest to the public.

(c) *Categories of requesters.* There are four categories of FOIA requesters: commercial use requesters; educational and noncommercial scientific institutions; representatives of the news media; and all other requesters. To be included in the category of educational and noncommercial scientific institutions, requesters must show that the request is authorized by a qualifying institution and that they are seeking the records not for a commercial use, but to further scholarly or scientific research. To be included in the news media category, a requester must meet the definition in paragraph (b)(8) of this section and the request must not be made for a commercial use. To avoid commercial use charges, requesters must show that they should be included in a category or categories other than that of commercial use requesters. The Board will decide the categories to place requesters for fee purposes. It will make these determinations based on information given by the requesters and information otherwise known to the Board.

(d) The Board will not charge a requester if the fee for any request is less than $100 (the cost to the Board of processing and collecting the fee).

(1) When the Board receives a request:

(i) From a commercial use requester, it will charge fees that recover the full direct costs for searching for the information requested, reviewing it for release at the initial request stage, reviewing it after an appeal to determine whether other exemptions not considered before the appeal apply to it, and copying it.

(ii) From an educational and noncommercial scientific institution or, to the extent copying exceeds 100 pages, from a representative of the news media, it will charge fees only for the cost of copying the requested information.

(iii) From all other requesters, to the extent copying exceeds 100 pages and search time exceeds 2 hours, it will charge fees for the full direct cost of searching for and copying requested records.

(2) When the Board reasonably believes that a requester or group of requesters is attempting to divide a request into more than one request to avoid payment of fees, the Board will combine the requests and charge fees accordingly. The Board will not combine multiple requests on unrelated subjects from one requester.

(3) When the Board decides that charges for a request are likely to exceed $250, the Board will require the requester to pay the entire fee in advance before continuing to process the request.

(4) When a requester has an outstanding fee charge or has not paid a fee on time, the Board will require the requester to pay the full amount of the estimated fee in advance before the Board begins to process a new or pending request from that requester, and before it applies administrative time limits for making a decision on the new or pending request.

(e) *Fee schedule.* (1) Fees for document searches for records will be charged at a rate of $5 per quarter hour spent by each Board employee performing the search.

(2) Fees for computer searches for records will be $5 per quarter hour spent by each employee operating the computer equipment and/or developing a new inquiry or report.

(3) Fees for review at the initial administrative level to determine whether records or portions of records are exempt from disclosure, and for review after an appeal to determine whether the records are exempt on other legal grounds, will be charged, for commercial use requests, at a rate of $5 per quarter hour spent by each reviewing employee.

(4) Fees for photocopying records is 20 cents a page, the fee for copying audio tapes is the direct cost up to $15 per cassette tape; the fee for copying video tapes is the direct cost up to $20 per tape; and the fee for computer printouts is 10 cents a page. The fee for duplication of electronically maintained information in the requester's preferred format will be $21 for copying computer tapes and $4 for copying records on computer diskettes, if it is feasible for the Board to reproduce records in the format requested. Fees for certified copies of the Board's records will include a $4 per page charge for each page displaying the Board's seal and certification. When the Board estimates that copying costs will exceed $100, it will notify the requester of the estimated amount unless the requester has indicated in advance a willingness to pay an equal or higher amount.

(f) *Fee waivers.* (1) Upon request, the Clerk of the Board, Regional Director, or Chief Administrative Judge, as appropriate, will furnish information without charge or at reduced rates if it is established that disclosure ''is in the public interest because it is likely to contribute significantly to public understanding of the operations or activities of the government.'' This decision will be based on:

(i) The subject of the request: Whether the subject of the requested records concerns the operations or activities of the government;

(ii) The informative value of the information to be disclosed: Whether the disclosure is likely to contribute to an understanding of government operations or activities;

(iii) Whether disclosure of the requested information is likely to contribute to public understanding of the subject of the disclosure; and

(iv) The significance of the contribution the disclosure would make to public understanding of government operations or activities.

(2) If information is to be furnished without charge or at reduced rates, the requester must also establish that disclosure of the information is not primarily in the commercial interest of the requester. This decision will be based on:

(i) Whether the requester has a commercial interest that would be furthered by the requested disclosure; and, if so,

(ii) Whether the identified commercial interest of the requester is sufficiently large, in comparison with

the public interest in disclosure, that disclosure is primarily in the commercial interest of the requester.

(3) The requester must establish eligibility for a waiver of fees or for reduced fees. The denial of a request for waiver of fees may be appealed under subpart C of this part.

§ 1204.13 Denials.

(a) The Board may deny: a request for reduced fees or waiver of fees; a request for a record, either in whole or in part; a request for expeditious processing based on the requester's compelling need; or a request that records be released in a specific electronic format. The denial will be in writing, will state the reasons, and will notify the requester of the right to appeal.

(b) If the Board applies one or more of the exemptions provided under the FOIA to deny access to some or all of the information requested, it will respond in writing, identifying for the requester the specific exemption(s), providing an explanation as to why the exemption(s) to withhold the requested information must be applied, and providing an estimate of the amount of material that has been denied to the requester, unless providing such an estimate would harm an interest protected by the exemptions.

(c) The amount of information deleted will be indicated on the released portion of the record at the place in the record where the deletion is made, if technically feasible and unless the indication would harm an interest protected by the exemption under which the deletion is made.

§ 1204.14 Requests for access to confidential commercial information.

(a) *General.* Confidential commercial information provided to the Board by a business submitter will not be disclosed in response to a FOIA request except as required by this section.

(b) *Definitions.* (1) The term *confidential commercial information* means records provided to the government by a submitter that are believed to contain material exempt from release under Exemption 4 of the Freedom of Information Act, 5 U.S.C. 552(b)(4), because disclosure could reasonably be expected to cause substantial competitive harm.

(2) The term *submitter* means any person or organization that provides confidential commercial information to the government. The term ''submitter'' includes, but is not limited to, corporations, state governments, and foreign governments.

(c) *Notice to business submitters.* The Board will provide a business submitter with prompt written notice of a request for its confidential commercial information whenever such written notice is required under paragraph (d) of this section. Exceptions to such written notice are at paragraph (h) of this section. This written notice will either describe the exact nature of the confidential information requested or provide copies of the records or parts of records containing the commercial information.

(d) *When initial notice is required.* (1) With respect to confidential commercial information received by the Board before January 1, 1988, the Board will give the business submitter notice of a request whenever:

(i) The information is less than 10 years old; or

(ii) The Board has reason to believe that releasing the information could reasonably be expected to cause substantial competitive harm.

(2) With respect to confidential commercial information received by the Board on or after January 1, 1988, the Board will give notice to the business submitter whenever:

(i) The business submitter has designated the information in good faith as commercially or financially sensitive information; or

(ii) The Board has reason to believe that releasing the information could reasonably be expected to cause substantial competitive harm.

(3) Notice of a request for commercially confidential information that was received by January 1, 1988, is required for a period of not more than 10 years after the date on which the information is submitted unless the business submitter requests, and provide justification for, a longer specific notice period. Whenever possible, the submitter's claim of confidentially must be supported by a statement or certification, by an officer or authorized representative of the company, that the information in question is confidential commercial information and has not been disclosed to the public.

(e) *Opportunity to object to disclosure.* Through the notice described in paragraph (c) of this section, the Board will give a business submitter a reasonable period to provide a detailed statement of any objection to disclosure. The statement must specify all grounds for withholding any of the information under any exemption of the Freedom of Information Act. In addition, in the case of Exemption 4, the statement must state why the information is considered to be a trade secret, or to be commercial or financial information that is privileged or confidential. Information a business submitter provides under this paragraph may itself be subject to disclosure under the Freedom of Information Act.

(f) *Notice of intent to release information.* The Board will consider carefully a business submitter's objections and specific grounds for claiming that the information should not be released before determining whether to release confidential commercial information. Whenever the Board decides to release confidential commercial information over the objection of a business submitter, it will forward to the business submitter a written notice that includes:

(1) A statement of the reasons for which the business submitter's objections to the release were not sufficient;

(2) A description of the confidential commerical information to be released; and

(3) A specified release date. The Board will forward the notice of intent to release the information a reasonable number of days, as circumstances permit, before the specified date upon which release is expected. It will forward a copy of the release notice to the requester at the same time.

(g) *Notice of Freedom of Information Act lawsuit.* Whenever a requester files a lawsuit seeking to require release of business information covered by paragraph (d) of this section, the Board will notify the business submitter promptly.

(h) *Exceptions to notice requirements.* The notice requirements of this section do not apply when:

(1) The Board decides that the information should not be released;

(2) The information lawfully has been published or otherwise made available to the public.;

(3) Disclosure of the information is required by law (other than 5 U.S.C. 552); or

(4) The disclosure is required by an agency rule that:

(i) Was adopted after notice and public comment;

(ii) Specifies narrow classes of records submitted to the agency that are to be released under the FOIA; or

(iii) Provides in exceptional circumstances for notice when the submitter provides written justification, at the time the information is submitted or a reasonable time thereafter, that release of the information could reasonably be expected to cause substantial competitive harm.

(5) The information requested is not designated by the submitter as exempt from release according to agency regulations issued under this section, when the submitter has an opportunity

to do so as the time of sending the information or a reasonable time thereafter, unless the agency has good reason to believe that disclosure of the information would result in competitive harm; or

(6) The designation made by the submitter according to Board regulations appears obviously frivolous; except that, in such case, the Board must provide the submitter with written notice of any final administrative release decision within a reasonable period before the stated release date.

§ 1204.15 Records of other agencies.

Requests for Board records that were created by another agency may, in appropriate circumstances, be referred to that agency for discussion or processing. In these instances, the Board will notify the requester.

Subpart C—Appeals

§ 1204.21 Submission.

(a) A person may appeal the following actions, or failure to act by the Clerk of the Board, a Regional Director, or Chief Administrative Judge:

(1) A denial of access to agency records;

(2) A denial of a request for a waiver or reduced fees;

(3) A decision that it is technically not possible to reproduce electronically maintained information in the requester's preferred format;

(4) A denial of a request for expedited processing of information under this part; or

(5) A failure to decide a request for expedited processing within 10 workdays from the date of the request.

(b) Appeals must be filed with the Chairman, Merit Systems Protection Board, 1120 Vermont Avenue NW., Washington, DC 20419–0001 within 10 workdays from the date of the denial. Any appeal must include a copy of the initial request, a copy of the letter denying the request, and a statement of the reasons why the requester believes the denying employee erred.

§ 1204.22 Decision on appeal.

A decision on an appeal will be made within 20 workdays after the appeal is received. A decision not to provide expeditious processing of a request will be made within 15 workdays after the appeal is received. The decision will be in writing and will contain the reasons for the decision and information about the appellant's right to seek court review of the denial.

Dated: June 24, 1999.

Robert E. Taylor,

Clerk of the Board.

[FR Doc. 99–16841 Filed 7–1–99; 8:45 am]

BILLING CODE 7400–01–M

MERIT SYSTEMS PROTECTION BOARD

5 CFR Part 1205

Privacy Act Regulations

AGENCY: Merit System Protection Board.

ACTION: Proposed rule; request for comments.

SUMMARY: The Merit System Protection Board proposes to amend its Privacy Act regulations to update its fee schedule, update certain information to conform to administrative changes, and to comply with the President's Memorandum on Plain Language in Government Writing.

DATES: Comments must be received by August 31, 1999.

ADDRESSES: Send comments to Shannon McCarthy, Deputy Clerk of the Board, Merit System Protection Board, 1120 Vermont Avenue, NW, Washington, DC 20419. Comments may be sent via e-mail to mspb@mspb.gov or faxed to (202) 653–7130.

FOR FURTHER INFORMATION CONTACT: Robert E. Taylor, Clerk of the Board, (202) 653–7200.

SUPPLEMENTARY INFORMATION: In order to be consistent with the amendments to our regulations (5 CFR 1204.11(c)) which were allowed by the Electronic Freedom of Information Act Amendments of 1996 (Pub. L. 104–231, 101 Stat. 3048), the Board is proposing to change from 10 to 20 the number of workdays in which it will acknowledge a request for access to records in § 1205.12(a) and (a)(4). Section 1205.23 would retain the 10 workday time limit but would reflect the requirement that the Board acknowledge, rather than rule on a request for amendment of the record. The amendments would add to unusual circumstances in § 1205.12(a)(1) the circumstance where the Board must obtain requested records from a Federal Records Center.

These amendments would also update § 1205.16 of the Board's rules controlling the computation and collection of fees. Paragraphs (e) and (f) of § 1205.16 would be eliminated as redundant and paragraph (f) would be renamed. Section 1205.31 would add a time limit of 10 workdays to file an appeal of a denial of an amendment with the Board's Chairman.

In addition, the Board proposes to update the wording of its regulations to reflect the existence of field offices in addition to its regional offices and the chief administrative judges who handle certain responsibilities in those offices. Other changes would be made for consistency, to update zip codes, and to comply with the President's Memorandum, ''Plain Language in Government Writing'', 34 Weekly Comp. Pres. Doc. 1010 (June 1, 1998).

List of Subjects in 5 CFR Part 1205 Privacy.

Accordingly, 5 CFR part 1205 is proposed to be revised to read as follows:

PART 1205—PRIVACY ACT REGULATIONS

Subpart A—General Provisions

Sec.
1205.1 Purpose.
1205.2 Policy and Scope.
1205.3 Definitions.
1205.4 Disclosure of Privacy Act records.

Subpart B—Procedures for Obtaining Records

1205.11 Access to Board records.
1205.12 Time limits and determinations.
1205.13 Identification.
1205.14 Granting access.
1205.15 Denying access.
1205.16 Fees.

Subpart C—Amendment of Records

1205.21 Request for amendment.
1205.22 Action on request.
1205.23 Time limits.

Subpart D—Appeals

1205.31 Submitting appeal.
1205.32 Decision on appeal.

Authority: 5 U.S.C. 552a and 1204.

Subpart A—General Provisions

§ 1205.1 Purpose.

This subpart implements the Privacy Act of 1974, 5 U.S.C. 552a, (''the Act'') by stating the procedures by which individuals may determine the existence of, seek access to, and request amendment of Board records concerning themselves, and by stating the requirements that apply to Board employees' use and disclosure of those records.

§ 1205.2 Policy and scope.

The Board's policy is to apply these regulations to all records that can be retrieved from a system of records under the Board's control by using an individual's name or by using a number, symbol, or other way to identify the individual. These regulations, however, do not govern the rights of the parties in adversary proceedings before the Board to obtain discovery from adverse

parties; those rights are governed by part 1201 and part 1209 of this chapter. These regulations also are not meant to allow the alteration, either before or after the Board has issued a decision on an appeal, of evidence presented during the Board's adjudication of the appeal.

§ 1205.3 Definitions.

The definitions of 5 U.S.C. 552a apply to this part. In addition, as used in this part:

(a) *Inquiry* means a request by an individual regarding whether the Board has a record that refers to that individual.

(b) *Request for access* means a request by an individual to look at or copy a record.

(c) *Request for amendment* means a request by an individual to change the substance of a particular record by addition, deletion, or other correction.

(d) *Requester* means the individual requesting access to or amendment of a record. The individual may be either the person to whom the requested record refers, a legal guardian acting on behalf of the individual, or a representative designated by that individual.

§ 1205.4 Disclosure of Privacy Act records.

(a) Except as provided in 5 U.S.C. 552a(b), the Board will not disclose any personal record information from systems of records it maintains to any individual other than the individual to whom the record refers, or to any other agency, without the express written consent of the individual to whom the record refers, or his or her representative or attorney.

(b) The Board's staff will take necessary steps, in accordance with the law and these regulations, to protect the security and integrity of the records and the personal privacy interests of the subjects of the records.

Subpart B—Procedures for Obtaining Records

§ 1205.11 Access to Board records.

(a) *Submission of request.* Inquires or requests for access to records must be submitted to the appropriate regional or field office of the Board, or to the Clerk of the Board, U.S. Merit Systems Protection Board, 1120 Vermont Avenue NW., Washington, DC 20419–0001. If the requester has reason to believe that the records are located in a regional or field office, the request must be submitted to that office. Requests submitted to the regional or field office must be addressed to the Regional Director or Chief Administrative Judge at the appropriate regional or field office listed in appendix II of 5 CFR part 1201.

(b) *Form.* Each submission must contain the following information:

(1) The name, address, and telephone number of the individual to whom the record refers;

(2) The name, address, and telephone number of the individual making the request if the requester is someone other than the person to whom the record refers, such as a legal guardian or an attorney, along with evidence of the relationship. Evidence of the relationship may consist of an authenticated copy of:

(i) The birth certificate of the minor child, and

(ii) The court document appointing the individual legal guardian, or

(iii) An agreement for representation signed by the individual to whom the record refers;

(3) Any additional information that may assist the Board in responding to the request, such as the name of the agency that may have taken an action against an individual, or the docket number of the individual's case;

(4) The date of the inquiry or request;

(5) The inquirer's or requester's signature; and

(6) A conspicuous indication, both on the envelope and the letter, that the inquiry is a ''PRIVACY ACT REQUEST''.

(c) *Identification.* Each submission must follow the identification requirements stated in § 1205.13 of this part.

(d) *Payment.* Records usually will not be released until fees have been received.

§ 1205.12 Time limits and determinations.

(a) *Board determinations.* The Board will acknowledge the request for access to records and make a determination on whether to grant it within 20 workdays after it receives the request, except under the unusual circumstances described below:

(1) When the Board needs to obtain the records from other Board offices or a Federal Records Center;

(2) When it needs to obtain and examine a large number of records;

(3) When it needs to consult with another agency that has a substantial interest in the records requested; or

(4) When other extenuating circumstances prevent the Board from processing the request within the 20-day period.

(b) *Time extensions.* When unusual circumstances exist, the Board may extend the time for making a determination on the request for no more than 10 additional workdays. If it does so, it will notify the requester of the extension.

(c) *Improper request.* If a request or an appeal is not properly labeled, does not contain the necessary identifying information, or is submitted to the wrong office, the time period for processing the request will begin when the correct official receives the properly labeled request and the necessary information.

(c) *Determining officials.* The Clerk of the Board, a Regional Director, or a Chief Administrative Judge will make determinations on requests.

§ 1205.13 Identification

(a) *In person.* Each requester must present satisfactory proof of identify. The following items, which are listed in order of the Board's preference, are acceptable proof of the requester's identity when the request is made in person:

(1) A document showing the requester's photograph;

(2) A document showing the requester's signature; or

(3) If the items described in paragraphs (a)(1) and (2) of the section are not available, a signed statement in which the requester asserts his or her identity and acknowledges understanding that misrepresentation of identity in order to obtain a record is a misdemeanor and subject to fine of up to $5,000 under 5 U.S.C. 552a(i)(3).

(b) *By mail.* The identification of a requester making a request by mail must be certified by a notary public or equivalent official or contain other information to identify the requester. Information could be the date of birth of the requester and some item of information in the record that only the requester would be likely to know.

(c) *Parents of minors, legal guardians, and representatives.* Parents of minors, legal guardians, and representatives must submit identification under paragraph (a) or (b) of this section. Additionally, they must present an authenticated copy of:

(1) The minor's birth certificate, and

(2) The court order of guardianship, or

(3) The agreement of representation, where appropriate.

§ 1205.14 Granting access.

(a) The Board may allow a requester to inspect records through either of the following methods:

(1) It may permit the requester to inspect the records personally during normal business chorus at a Board office or other suitable Federal facility closer to the requester; or

(2) It may mail copies of the records to the requester.

(b) A requester seeking personal access to records may be accompanied

by another individual of the requester's choice. Under those circumstances, however, the requester must sign a statement authorizing the discussion and presentation of the record in the accompanying individual's presence.

§ 1205.15 Denying access.

(a) *Basis.* In accordance with 5 U.S.C. 552a(k)(2), the Board may deny access to records that are of an investigatory nature and that are compiled for law enforcement purposes. Those requests will be denied only where access to them would otherwise be unavailable under Exemption (b)(7) of the Freedom of Information Act.

(b) *Form.* All denials of access under this section will be made in writing and will notify the requester of the right to judicial review.

§ 1205.16 Fees.

(a) No fees will be charged except for making copies of records.

(b) Photocopies of records duplicated by the Board will be subject to a charge of 20 cents a page.

(c) If the fee to be assessed for any request is less than $100 (the cost to the Board of processing and collecting the fee), no charge will be made to the requester.

(d) Fees for copying audio tapes and computer records will be charged at a rate representing the actual costs to the Board, as shown below.

(1) Audio tapes will be provided at a charge not to exceed $15 for each cassette tape.

(2) Computer printouts will be provided at a charge of 10 cents a page.

(3) Records reproduced on computer tapes, computer diskettes, or other electronic media, will be provided at the actual cost to the Board.

(e) The Board will provide one copy of the amended parts of any record it amends free of charge as evidence of the amendment.

Subpart C—Amendment of Records

§ 1205.21 Request for amendment.

A request for amendment of a record must be submitted to the Regional Director or Chief Administrative Judge of the appropriate regional or field office, or to the Clerk of the Board, U.S. Merit Systems Protection Board, 1120 Vermont Avenue NW., Washington, DC 20419–0001, depending on which office had custody of the record. The request must be in writing, must be identified conspicuously on the outside of the envelope and the letter as a ''PRIVACY ACT REQUEST,'' and must include the following information:

(a) An identification of the record to be amended;

(b) A description of the amendment requested; and

(c) A statement of the basis for the amendment, along with supporting documentation, if any.

§ 1205.22 Action on request.

(a) *Amendment granted.* If the Board grants the request for amendment, it will notify the requester and provide him or her with a copy of the amendment.

(b) *Amendment denied.* If the Board denies the request for amendment in whole or in part, it will provide the requester with a written notice that includes the following information:

(1) The basis for the denial; and

(2) The procedures for appealing the denial.

§ 1205.23 Time limits.

The Clerk of the Board, Regional Director, or Chief Administrative Judge will acknowledge a request for amendment within 10 workdays of receipt of the request in the appropriate office except under the unusual circumstances described in paragraphs (a)(1) through (a)(4) of § 1205.12 of this part.

Subpart D—Appeals

§ 1205.31 Submitting appeal.

(a) A partial or complete denial, by the Clerk of the Board, by the Regional Director, or by the Chief Administrative Judge, of a request for amendment may be appealed to the Chairman, Merit System Protection Board, 1120 Vermont Avenue, NW., Washington, DC 20419–0001 within 10 workdays from the date of the denial.

(b) Any appeal must be in writing, must be clearly and conspicuously identified as a Privacy Act appeal on both the envelope and letter, and must include:

(1) A copy of the original request for amendment of the record;

(2) A copy of the denial; and

(3) A statement of the reasons why the original denial should be overturned.

§ 1205.32 Decision on appeal.

(a) The Chairman will decide the appeal within 30 workdays unless the Chairman determines that there is good cause for extension of that deadline. If an appeal is improperly labeled, does not contain the necessary information, or is submitted to an inappropriate official, the time period for processing that appeal will begin when the Chairman receives the appeal and the necessary information.

(b) If the request for amendment of a record is granted on appeal, the Chairman will direct that the amendment be made. A copy of the amended record will be provided to the requester.

(c) If the request for amendment of a record is denied, the Chairman will notify the requester of the denial and will inform the requester of:

(1) The basis for the denial;

(2) The right to judicial review of the decision under 5 U.S.C. 552a(g)(1)(A); and

(3) The right to file a concise statement with the Board stating the reasons why the requester disagrees with the denial. This statement will become a part of the requestor's record.

Dated: June 24, 1999.

Robert E. Taylor,

Clerk of the Board.

[FR Doc. 99–16842 Filed 7–1–99; 8:45 am]

BILLING CODE 7400–01–M

DEPARTMENT OF ENERGY

10 CFR Part 810

RIN No. 1992–AA24

Assistance to Foreign Atomic Energy Activities

AGENCY: Office of Arms Control and Nonproliferation, Department of Energy.

ACTION: Notice of proposed rulemaking.

SUMMARY: The Department of Energy (DOE) proposes to amend its regulations concerning unclassified assistance to foreign atomic energy activities. These amendments are designed to: make explicit DOE's export control jurisdiction over transfers of technology and services to foreign activities relating to production of special nuclear material (SNM) by means of accelerator-driven subcritical assembly systems (particle accelerators operating in conjunction with subcritical assemblies); revise the list of countries for which all assistance controlled by these regulations requires specific authorization; and substitute current addressees for submitting reports and requests. DOE is soliciting public comment on the proposed amendments within 60 days. Following consideration of submitted comments, DOE intends to publish a final rule on the amendments as promptly as possible.

DATES: Comments are due on or before August 31, 1999.

ADDRESSES: Written comments (3 copies) should be sent to: U.S. Department of Energy, Office of Arms Control and Nonproliferation, Nuclear Transfer and Supplier Policy Division, NN–43, NOPR, 1000 Independence Ave. S.W., Washington, DC 20585. Comments

should be identified on the outside of the envelope and on the documents themselves with the designation ''Accelerators—Notice of Proposed Rulemaking,'' FAX comments will not be accepted. The administrative record on file will be located in the Department's Freedom of Information Reading Room, Room 1E–190, 1000 Independence Ave. S.W., Washington, DC 20585.

FOR FURTHER INFORMATION CONTACT: Mr. Zander Hollander, Nuclear Transfer and Supplier Policy Division, NN–43, Office of Arms Control and Nonproliferation, U.S. Department of Energy, 1000 Independence Ave. S.W., Washington, DC 20585: Telephone (202) 586–2125; or Mr. Robert Newton, Office of General Counsel, GC–53, U.S. Department of Energy, 1000 Independence Ave. S.W., Washington, DC 20585: Telephone (202) 586–0806.

SUPPLEMENTARY INFORMATION:

1. Background

10 CFR Part 810 implements section 57b(2) of the Atomic Energy Act of 1954, as amended by section 302 of the Nuclear Non-Proliferation Act of 1978 (NNPA) (42 U.S.C. 2077). These sections require that U.S. persons who engage directly or indirectly in the production of SNM outside the United States be authorized to do so by the Secretary of Energy. Recent technological progress in accelerator-driven subcritical assembly systems has led to questions concerning the applicability of the Part 810 regulations to such activities. Most accelerator activity until now has been in fields of basic scientific research and development, such as detecting and identifying subatomic particles to better understand the structure of matter and the composition of the universe. The accelerator scientific community has been almost entirely an open one of free exchange of ideas and data, unrestricted publication of findings, and broad cooperation among scientists to build more powerful accelerators for more advanced experimentation. DOE scientists have been in the forefront of these activities and undoubtedly will remain so. DOE has no intention of limiting such scientific efforts, either by export control measures or otherwise. Yet, in recent years scientists have begun to develop accelerator-driven subcritical assembly systems that could be adapted to production of SNM. For example, DOE currently is pursuing accelerator production of tritium, which, while sometimes used in nuclear weapons, is not defined by the Atomic Energy Act as SNM. (The export of facilities, plants, equipment, and technology for production of tritium falls under the licensing authority of the Department of Commerce.) However, studies have shown that some accelerator-driven subcritical assembly systems are capable of producing significant quantities of plutonium or uranium-233, both of which are SNM as defined by the Act. Further, research and development is under way on transmutation of nuclear waste (ATW) by means of accelerator-driven subcritical assembly systems, which also may involve the processing of SNM. For these reasons, DOE takes the position that Part 810 applies to accelerator-driven subcritical assembly system technology as it does to other technologies for production of SNM, such as enrichment, reprocessing, and nuclear reactors. However, DOE intends Part 810 to apply to accelerator-driven subcritical assembly system activities only when the purpose is SNM production or when the activities would result in significant SNM production. While some accelerators devoted to basic scientific research and development activities may, technically, also be capable of configuration to produce SNM, DOE does not intend to exert export control authority on the basis of such capability.

In explicitly asserting its part 810 jurisdiction over accelerator-driven subcritical assembly system technology, DOE is guided by the following policy: specific authorization by the Secretary is required for the export to any country of technology or services for production of SNM by means of an accelerator-driven subcritical assembly system, or when a U.S. provider of assistance knows or has reason to know that an accelerator-driven subcritical assembly system will be used for the production or processing of SNM. When not publicly announced, such knowledge may come to the attention of the U.S. provider of assistance through contact with participants in such a project or may be brought to the provider's attention by the U.S. Government or another party. Assistance to components of the system also is considered within the scope of these regulations when the system is used to or is intended to produce SNM. In explicitly asserting jurisdiction over accelerator-driven subcritical assemblies, DOE believes specific authorization should be required only when the subcritical assembly is capable of continuous operation above five megawatts thermal, for those below this capability do not pose significant proliferation concern. This is the same threshold of control DOE applies to exports of assistance to research and test reactors.

DOE part 810 jurisdiction applies to assistance to foreign nationals, institutions, governments, and corporate or other entities when the objective is to produce SNM (plutonium or uranium-233) with an accelerator-driven subcritical assembly system, whether the assistance is given inside or outside the United States. However, DOE part 810 jurisdiction over assistance should not be construed as inhibiting a U.S. provider of assistance from participating in multinational or other non-U.S. accelerator activities when the intent is not to produce SNM, but rather for scientific, medical, or other non-SNM objectives. When a U.S. provider has no reason to believe that accelerator production of SNM is the objective, the U.S. provider needs no part 810 authorization. The same is true for U.S. hosts of foreign participation in scientific or other non-SNM accelerator activities in the United States. Therefore, unless intending to pursue accelerator-driven subcritical assembly system technologies for the production of SNM outside the United States or to allow foreign scientists to participate in such activities in the United States, members of the U.S. accelerator community—individual scientists, universities, commercial firms, research and development institutions, and other enterprises—will not require part 810 authorization.

The section 810.8 list of countries is being revised to include all non-nuclear-weapon states that do not have full-scope safeguards agreements with the IAEA and to reflect changes in world conditions since the last time the list was published. Since existence of an IAEA full-scope safeguards agreement is an important factor in making part 810 determinations, DOE believes applicants should be aware of which countries do not have such agreements.

2. Proposed Regulatory Changes

The following changes are proposed to be made to Part 810:

A. Section 810.3. Definitions. Definitions for ''non-nuclear-weapon state,'' ''accelerator-driven subcritical assembly system,'' ''production accelerator,'' and ''subcritical assembly'' would be added.

B. Section 810.4. Communications. A new addressee for communications concerning these regulations would be given.

C. Section 810.5. Interpretations. The title of the DOE office providing advice would be changed.

D. Section 810.7. Generally authorized activities. Assistance to

accelerator-driven subcritical assembly systems'' and certain research and test reactors would be added to the exclusions from this general authorization.

E. Section 810.8. Activities requiring specific authorization. Specific authorization would be required for assistance relating to accelerator-driven subcritical assembly systems' capable of continuous operation above five megawatts thermal. In addition, the list of countries in this section would be revised and countries lacking full-scope safeguards agreements noted.

F. Section 810.13. Reports. The title of the office to which reports should be sent would be changed.

G. Section 810.16. Effective date and savings clause. The effective date would be changed but the savings clause would continue to state that the revision will not affect previously granted specific authorizations or generally authorized activities for which the contracts, purchase orders, or licensing arrangements are already in effect on the date of publication of the final rule; also, that persons engaging in activities generally authorized under the present regulations but requiring specific authorization under the revision must request such specific authorization within 90 days but may continue their activities until DOE acts on the request.

3. Statutory Requirements

Pursuant to section 57b of the Atomic Energy Act as amended by the NNPA, with the concurrence of the Department of State and after consultations with the Departments of Defense and Commerce, and the Nuclear Regulatory Commission, the Secretary of Energy has determined that to authorize this proposed revision of 10 CFR part 810 will not be inimical to the interests of the United States.

4. Public Comment

A. Interested persons are invited to participate in this rulemaking by submitting three (3) copies of their comments to the Director of the Nuclear Transfer and Supplier Policy Division at the address set forth in the **ADDRESSES** section of this notice. The deadline for receipt of comments is indicated in the **DATES** section of this notice. Comments should be identified on the outside of the envelope and on the documents themselves with the designation ''Accelerators—Notice of Proposed Rulemaking.''

All comments received on or before the date specified in the beginning of this notice and all other relevant information will be considered by DOE before taking final action.

Any person submitting information which that person believes to be confidential and which may be exempt by law from public disclosure should submit one complete copy marked confidential, as well as three (3) copies from which the information claimed to be confidential has been deleted. DOE reserves the right to determine the confidential status of the information or data and to treat it according to its determination. This procedure is set forth in 10 CFR 1004.11.

B. Public Hearing. This notice of proposed rulemaking does not involve any significant issues of law or fact and the rule would be unlikely to have a substantial impact on the Nation's economy or large numbers of individuals or businesses. Accordingly, pursuant to 42 U.S.C. 7191(c) and 5 U.S.C. 553, DOE is not scheduling a public hearing.

5. Procedural Matters

A. Review Under Executive Order 12866

This proposed rule has been determined not to be a significant regulatory action under Executive Order 12866, ''Regulatory Planning and Review'' (58 FR 51735, October 4, 1993). In accordance with the requirements of the Executive Order, this notice of proposed rulemaking was not subject to review by the Office of Information and Regulatory Affairs of the Office of Management and Budget.

B. Review Under the Regulatory Flexibility Act

The proposed rule has been reviewed under the Regulatory Flexibility Act of 1980, Pub. L. 96–354 (42 U.S.C. 601–612) which requires preparation of a regulatory flexibility analysis for any regulation that will have a significant economic impact on a substantial number of small entities, i.e., small businesses and small government jurisdictions. This action would have no such impact because the revisions only codify in the regulations existing DOE export control jurisdiction and U.S. Government obligations. DOE accordingly certifies that there will not be a significant economic impact on a substantial number of small entities and that preparation of a regulatory flexibility analysis is not warranted.

C. Review under the National Environmental Policy Act

The proposed rule has been reviewed under the National Environmental Policy Act of 1969, Pub. L. 91–190 (42 U.S.C. 4321 *et seq.*), Council on Environmental Quality Regulations (40 CFR parts 1500–08), and the Department of Energy environmental regulations (10 CFR part 1021) and has been determined not to constitute a major Federal action significantly affecting the quality of the human environment. Accordingly, no environmental impact statement is required.

D. Review Under Executive Order 12612

Executive Order 12612 (52 FR 41685, October 30, 1987) requires that regulations be reviewed for any substantial direct effects on States, on the relationship between the national Government and the States, or in the distribution of power among various levels of government. If there are sufficient substantial direct effects, the Executive Order requires the preparation of a Federalism assessment to be used in decisions by senior policy makers in promulgating or implementing the regulation. The proposed rule will not have a substantial direct effect on the traditional rights and prerogatives of States in relationship to the Federal Government. Preparation of a Federalism assessment is therefore unnecessary.

E. Review Under Executive Order 12988

With respect to review of existing regulations and promulgation of new regulations, section 3(a) of Executive Order 12988, ''Civil Justice Reform,'' (61 FR 4729, February 7, 1996), imposes on Executive agencies the general duty to adhere to the following requirements: (1) Eliminate drafting errors and ambiguity; (2) write regulations to minimize litigation; and (3) provide a clear legal standard for affected conduct rather than a general standard and promote simplification and burden reduction. With regard to the review required by section 3(a), section 3(b) of Executive Order 12988 specifically requires that Executive agencies make every reasonable effort to ensure that the regulation: (1) Clearly specifies the pre-emptive effects, if any; (2) clearly specifies any effect on existing Federal law or regulation; (3) provides a clear legal standard for affected conduct while promoting simplification and burden reduction; (4) specifies the retroactive effect, if any; (5) adequately defines key terms; and (6) addresses other important issues affecting clarity and general draftsmanship under any guidelines issued by the Attorney General. Section 3(c) of Executive Order 12988 requires Executive agencies to review regulations in light of applicable standards in section 3(a) and section 3(b) to determine whether they are met or it is unreasonable to meet one or more of them. DOE has completed the

required review and determined that, to the extent permitted by law, the proposed regulations meet the relevant standards of Executive Order 12988.

F. Paperwork Reduction Act

The information collections in this proposed rule are exempt from review by the Office of Management and Budget and from public comment for reasons of national security as provided for in Executive Orders 12035 and 12333 issued under the Paperwork Reduction Act of 1980 (44 U.S.C. 3501 *et seq.*).

List of Subjects in 10 CFR Part 810

Foreign relations, Nuclear energy, Reporting and recordkeeping requirements.

Issued in Washington, D.C., June 23, 1999.

Rose Gottemoeller,

Assistant Secretary for Nonproliferation and National Security.

For reasons set forth in the preamble, Chapter III of Title 10 of the Code of Federal Regulations is proposed to be amended as follows:

PART 810—ASSISTANCE TO FOREIGN ATOMIC ENERGY ACTIVITIES

1. The authority citation for part 810 continues to read as follows:

Authority: Secs. 57, 127, 128, 129, 161, and 223, Atomic Energy Act of 1954, as amended by the Nuclear Non-Proliferation Act of 1978, Pub. L. 95–242, 68 Stat. 932, 948, 950, 958, 92 Stat. 126, 136, 137, 138 (42 U.S.C. 2077, 2156, 2157, 2158, 2201, 2273); Sec. 104 of the Energy Reorganization Act of 1974, Pub. L. 93–438; Sec 301, Department of Energy Organization Act, Pub. L. 95–91.

2. Section 810.3 is amended by adding new definitions of ''accelerator-driven subcritical assembly system,'' ''non-nuclear-weapon state,'' ''production accelerator,'' and ''subcritical assembly,'' in alphabetical order, to read as follows:

§ 810.3 Definitions.

* * * * *

Accelerator-driven subcritical assembly system is a system comprising a ''subcritical assembly'' and a ''production accelerator'' and which is designed or used for the purpose of producing or processing special nuclear material (SNM) or which a U.S. provider of assistance knows or has reason to know will be used for the production or processing of SNM. In such a system, the ''production accelerator'' provides a source of neutrons used to effect SNM production in the ''subcritical assembly.''

* * * * *

Non-nuclear-weapon state is a country not recognized as a nuclear-weapon state by the NPT (i.e., states other than the United States, Russia, the United Kingdom, France, and China).

* * * * *

Production accelerator is a particle accelerator designed and/or intended to be used, with a subcritical assembly, for the production or processing of SNM or which a U.S. provider of assistance knows or has reason to know will be used for the production or processing of SNM.

* * * * *

Subcritical assembly is an apparatus containing source material or SNM designed or used to produce a nuclear fission chain reaction that is not self-sustaining.

* * * * *

3. Section 810.4, paragraph (a) is revised to read as follows:

§ 810.4 Communications.

(a) All communications concerning the regulations in this part should be addressed to: U.S. Department of Energy, Washington, DC 20585. Attention: Director, Nuclear Transfer and Supplier Policy Division, NN–43, Office of Arms Control and Nonproliferation. Telephone: (202) 586–2331.

* * * * *

4. Section 810.5, is revised to read as follows:

§ 810.5 Interpretations.

A person may request the advice of the Director, Nuclear Transfer and Supplier Policy Division (NN–43) on whether a proposed activity falls outside the scope of part 810, is generally authorized under § 810.7, or requires specific authorization under § 810.8; however, unless authorized by the Secretary of Energy in writing, no interpretation of these regulations other than a written interpretation by the General Counsel is binding upon the Department. When advice is requested from the Director, Nuclear Transfer and Supplier Policy Division, or a binding, written determination is requested from the General Counsel, a response normally will be made within 30 days and, if this is not feasible, an interim response will explain the delay.

5. In § 810.7, paragraph (h) is revised to read as follows:

* * * * *

§ 810.7 Generally authorized activities.

(h) Otherwise engaging directly or indirectly in the production of special nuclear material outside the United States in ways that:

(1) Do not involve any of the countries listed in § 810.8(a); and

(2) Do not involve production reactors, accelerator-driven subcritical assemblies systems, enrichment, reprocessing, fabrication of nuclear fuel containing plutonium, production of heavy water, or research reactors, or test reactors, as described in § 810.8(c) (1) through (6).

6. Section 810.8, is revised to read as follows:

§ 810.8 Activities requiring specific authorization.

Unless generally authorized by § 810.7, a person requires specific authorization by the Secretary of Energy before:

(a) Engaging directly or indirectly in the production of special nuclear material in any of the countries listed below. Countries marked with an asterisk (*) are non-nuclear-weapon states that do not have full-scope IAEA safeguards agreements in force.

Afghanistan
Albania
Algeria
Andorra *
Angola *
Armenia
Azerbaijan *
Bahamas *
Bahrain *
Belarus
Benin *
Botswana *
Burkina Faso *
Burma (Myanmar)
Burundi *
Cambodia *
Cameroon *
Cape Verde *
Central African Republic *
Chad *
China, People's Republic of
Colombia *
Comoros*
Congo*
Cuba*
Djibouti*
Equatorial Guinea*
Eritrea*
Gabon*
Georgia*
Guinea*
Guinea-Bissau*
Haiti*
India*
Iran
Iraq
Israel*
Kazakhstan
Kenya*
Kuwait*
Korea, People's Democratic Republic of
Kyrgyzstan*
Laos*
Liberia*
Libya
Macedonia*
Mali*

Marshall Islands*
Mauritania*
Micronesia*
Moldova*
Mongolia
Mozambique*
Niger*
Oman*
Pakistan*
Palau*
Panama*
Qatar*
Russia
Rwanda*
Sao Tome and Principe*
Saudi Arabia*
Seychelles*
Sierra Leone*
Somalia
Sudan
Syria
Tajikistan*
Tanzania*
Togo*
Turkmenistan*
Uganda*
Ukraine
United Arab Emirates*
Uzbekistan
Vanuatu*
Vietnam
Yemen*

(b) Providing sensitive nuclear technology for an activity in any foreign country.

(c) Engaging in or providing assistance in any of the following activities with respect to any foreign country.

(1) Designing production reactors, accelerator-driven subcritical assembly systems, or facilities for the separation of isotopes of source or special nuclear material (enrichment), chemical processing of irradiated special nuclear material (reprocessing), fabrication of nuclear fuel containing plutonium, or the production of heavy water;

(2) Constructing, fabricating, operating, or maintaining such reactors, accelerator-driven subcritical assembly systems, or facilities;

(3) Designing, constructing, fabricating, operating or maintaining components especially designed, modified or adapted for use in such reactors, accelerator-driven critical assembly systems, or facilities;

(4) Designing, constructing, fabricating, operating or maintaining major critical components for use in such reactors, accelerator-driven subcritical assembly systems, or production-scale facilities; or

(5) Designing, constructing, fabricating, operating, or maintaining research reactors, test reactors or accelerator-driven subcritical assembly systems' capable of continuous operation above five megawatts thermal.

(6) Training in the activities of paragraphs (c) (1) through (5) of this section.

7. In § 810.10 paragraph (a), is revised to read as follows:

§ 810.10 Grant of specific authorization.

(a) Any person proposing to provide assistance for which § 810.8 indicates specific authorization is required may apply for the authorization to the U.S. Department of Energy, Washington, DC 20585, Attention: Director, Nuclear Transfer and Supplier Policy Division, NN–43, Office of Arms Control and Nonproliferation.

* * * * *

8. In § 810.13, paragraph (g) is revised to read as follows:

§ 810.13 Reports.

* * * * *

(g) All reports should be sent to: U.S. Department of Energy, Washington, DC 20585, Attention: Director, Nuclear Transfer and Supplier Policy Division, NN–43, Office of Arms Control and Nonproliferation.

9. Section 810.16 is revised as follows:

§ 810.16 Effective date and savings clause.

These regulations are effective on [insert date of publication of final rule in the Federal Register]. Except for actions that may be taken by DOE pursuant to § 810.11, this revision does not affect the validity or terms of any specific authorizations granted under the previous regulations or generally authorized activities under the previous regulations for which the contracts, purchase orders, or licensing arrangements are already in effect. Persons engaging in activities that were generally authorized under the previous regulations but that require specific authorization under the revised regulations must request specific authorization within 90 days but may continue their activities until DOE acts on the request.

[FR Doc. 99–16800 Filed 7–1–99; 8:45 am]
BILLING CODE 6450–01–P

DEPARTMENT OF TRANSPORTATION

Federal Aviation Administration

14 CFR Part 93

[Docket No. 29624]

High Density Rule

AGENCY: Federal Aviation Administration (FAA), DOT.

ACTION: Proposed interpretation; request for comments.

SUMMARY: This action requests comments on a proposed interpretation of the term ''operator'' as used to interpret the extra section provision of the FAA's High Density Rule. This proposed interpretation would permit one airline code-share partner to operate an extra section of a regularly scheduled flight of another code-share partner. It is intended to recognize the development of code-share arrangements in the aviation industry.

DATES: Comments must be submitted on or before July 12, 1999.

ADDRESSES: Comments regarding this action should be mailed, in triplicate, to Federal Aviation Administration, Office of the Chief Counsel, Attention: Rules Docket (AGC–10), Docket No. 29624, 800 Independence Avenue, SW., Washington, DC 20591. Comments must be marked Docket No. 29624. Comments may be examined in Room 915G weekdays between 8:30 a.m. and 5 p.m., except on Federal holidays.

FOR FURTHER INFORMATION CONTACT: Lorelei Peter, Air Traffic and Airspace Law Branch, Office of the Chief Counsel, AGC–230, Federal Aviation Administration 800 Independence Avenue, SW., Washington, DC 20591, (202) 267–3073.

SUPPLEMENTARY INFORMATION:

Comments Invited

Interested persons are invited to comment on this action by submitting such written data, views, or arguments, as they may desire. Comments should identify the regulatory docket and should be submitted in triplicate to the Rules Docket address specified above. All comments received will be available, both before and after the closing date for comments, in the Rules Docket for examination by interested persons. Commenters wishing the FAA to acknowledge receipt of their comments submitted in response to this action must include a preaddressed, stampted postcard marked ''Comments to Docket 29624.'' The postcard will be date stamped and mailed to the commenter.

Background

The FAA has broad authority under Title 49 of the United States Code (U.S.C.), Subtitle VII, to regulate and control the use of navigable airspace of the United States. Under 49 U.S.C. 40103, the agency is authorized to develop plans for and to formulate policy with respect to the use of navigable airspace and to assign by rule, regulation, or order the use of navigable airspace under such terms, conditions, and limitations as may be deemed

necessary in order to ensure the safety of aircraft and the efficient utilization of the navigable airspace. Also, under section 40103, the agency is further authorized and directed to prescribe air traffic rules and regulations governing the efficient utilization of the navigable airspace.

The High Density Traffic Airports Rule, or ''High Density Rule,'' 14 CFR part 93, subpart K, was promulgated in 1968 to reduce delays at five congested airports: JFK International Airport, LaGuardia Airport, O'Hare International Airport, Ronald Reagan Washington National (National) Airport, Newark International Airport (33 FR 17896; December 3, 1968). The regulation limits the number of instrument flight rule (IFR) operations at each airport, by hour or half-hour, during certain hours of the day. It provides for the allocation to carriers of operational authority, in the form of a ''slot'' for each IFR landing or takeoff during a specific 30- or 60-minute period. The restrictions were lifted at Newark in the early 1970's.

On December 16, 1985, the Department of Transportation (Department) promulgated the ''buy/sell'' rule (14 CFR part 93, subpart S), a comprehensive set of regulations that provide for the allocation and transfer of air carrier and commuter slots (50 FR 52180; December 20, 1985). The two primary features of this rule were, first, that initial allocation would be accomplished by ''grandfathering'' existing slots to the carriers that currently held them, and second, that a relatively unrestricted aftermarket in slots would be permitted. As a result, effective April 1, 1986, slots used for domestic operations could be bought and sold by any party.

Current Requirements

14 CFR 93.123(b)(4) permits air carriers at LaGuardia, Newark, O'Hare and National Airports to conduct ''extra section'' operations of scheduled flights. Additionally, commuters are permitted to conduct extra section operations of scheduled flights at National Airport. An extra section is when an operator conducting a scheduled operation with a slot finds it necessary to use an additional aircraft to service passengers that cannot be accommodated on the original scheduled flight. Under these circumstances, the operator may conduct that additional flight or ''extra section'' without another slot.

The purpose of the extra section provision was to accommodate operations that an operator cannot precisely predict. Extra section operations are not scheduled operations and it would be impractical to obtain permanent slots for such operations. Regular scheduled operations do not have the same uncertainty and, these require slots. The extra section authority is available to any air carrier, or commuter operator at Washington National, with a slot for regularly scheduled operations. The extra section must: (1) Be non-scheduled; (2) serve passengers that cannot be accommodated on the original scheduled flight for which the operator has obtained an arrival or departure slot; and (3) depart no more than a few minutes before, on, or after the time at which the original flight was scheduled (46 FR 58306; November 27, 1981).

Historically, the FAA has interpreted the extra section provision as limited to aircraft operated by the operator who had the slot and conducted the scheduled operation. At the time this provision was promulgated, code-share agreements were not widely used. The FAA finds that the increasing use of code-share agreements in the aviation industry warrants a reexamination of this interpretation.

Proposed Interpretation

For purposes of the extra section provision codified in 14 CFR 92.123(b)(4), the FAA proposes to interpret the term ''operator'' to include the partners to a code-share agreement/alliance. As a result of this proposed interpretation, one code-share partner may conduct an extra section operation to an original scheduled flight of another code-share partner without the need for an additional slot. This interpretation does not change the requirement for the operator conducting the original scheduled operation to have a slot allocated under 14 CFR 93.123. This interpretation also does not affect any aspect of the Department's policy and regulations addressing code-share.

The FAA does not anticipate that this proposed interpretation would result in any operational impact at the airports since the regulations permit use of extra sections. Lastly, the FAA emphasizes that this proposed interpretation does not affect or in anyway modify the provisions of 14 CFR 93.123(c), which establishes the type of aircraft that may operate in air carrier and commuter slots at the high density traffic airports. The regulations governing slots do not permit the use of air carrier category aircraft in commuter slots. Specifically, at National Airport, only commuter equipment may be used to conduct extra sections of commuter operations when using a commuter slot.

The FAA requests comments on the above-proposed interpretation. The FAA finds that because there is an immediate need for this flexibility in extra section operations, the public interest supports a short comment period.

Regulatory Evaluation Summary

Changes to Federal regulations must undergo several economic analyses. First, Executive Order 12866 directs that each Federal agency shall proposed or adopt a regulation only upon a reasoned determination that the benefits of the intended regulation justify its costs. Second, the Regulatory Flexibility Act requires agencies to analyze the economic effect of regulatory changes on small business and other small entities. Third, the Office of Management and Budget directs agencies to assess the effect of regulatory changes on international trade. This proposed interpretation has been reviewed as an interpretive rule in accordance with Executive Order 12866 and the Regulatory Flexibility Act of 1980. It is not a ''significant regulatory action'' as defined in the Executive Order or the Department of Transportation Regulatory Policies and Procedures.

The proposed interpretation would permit code share partners to operate extra sections at certain high density airports. Extra section operations are already permitted by the rule. This proposed interpretive rule would not impose any new or additional costs on code share partners.

Moreover, since the expected impact is minimal, this proposal does not warrant a full evaluation. This proposed interpretative rule is not considered significant under the regulatory procedures of the Department of Transportation (44 FR 11034; February 26, 1979).

Initial Regulatory Flexibility Determination

The Regulatory Flexibility Act (RFA) of 1980, 5 U.S.C. 601–612, was enacted by U.S. Congress to ensure that small entities are not unnecessarily or disproportionately burdened by Government regulations. The RFA requires a regulatory flexibility analysis if a proposed rule has a significant economic impact on a substantial number of small business entities.

The FAA is aware of only two air carriers regularly using extra sections in their daily operations (''shuttle operators''). These operators are not small entities. Moreover, while the resulting flexibility in the use of one partner's aircraft to support the operation of the other partner will result in some benefits to the affected air carriers and commuters, they are minimal when compare to the

overall revenues derived from their operations. Accordingly, pursuant to the Regulatory Flexibility Act, 5 U.S.C. 605(b), the Federal Aviation Adminsitration certifies that this rule would not have a significant economic impact on a substantial number of small entities. The FAA solicits comments from affected entities with respect to this finding and determination and requests that commenters provide supporting data or analyses.

International Trade Impact Analysis

The provisions of this proposed interpretive rule would have little or no impact of trade for U.S. firms doing business in foreign countries and foreign firms doing business in the United States.

Federalism Implications

The proposed interpretive rule would not have a substantial direct effect on the States, on the relationship between the national Government and the States, or on the distribution of power and responsibilities among the various levels of government. Therefore, in accordance with Executive Order 12612, it is determined that this rule would not have sufficient federalism implications to warrant the preparation of a federalism assessment.

Unfunded Mandates Reform Act

Title II of the Unfunded Mandates Reform Act of 1995 (the Act), codified in 2 U.S.C. 1501–1571, requires each Federal agency, to the extent permitted by law, to prepare a written assessment of the effects of any Federal mandate in a proposed or final agency rule when such a mandate would be ''significant.'' A significant regulatory action under the Act is any provision in a Federal agency regulation that would result in an expenditure by State, local, and tribal governments, or by the private sector, in the aggregate of $100 million or more (adjusted annually for inflation) in any one year.

Since this proposed interpretive rule does not impose any cost, the requirements of Title II of the Unfunded Mandates Reform Act of 1995 do not apply.

Paperwork Reduction Act

In accordance with the Paperwork Reduction Act of 1995 (44 U.S.C. 3507(d)), the FAA has determined that there are no requirements for information collection associated with this proposed rule.

Issued in Washington, DC, on June 28, 1999.

Nicholas G. Garaufis,

Chief Counsel.

[FR Doc. 99–16807 Filed 7–1–99; 8:45 am]

BILLING CODE 4910–13–M

FEDERAL TRADE COMMISSION

16 CFR Part 453

Extension of Time for Comments Concerning Trade Regulation Rule on Funeral Industry Practices

AGENCY: Federal Trade Commission.

ACTION: Notice of extension of comment period.

SUMMARY: The Federal Trade Commission (''the Commission'' or ''FTC'') has extended the date by which comments must be submitted concerning the review of its Trade Regulation Rule on Funeral Industry Practices (''Funeral Rule''). This document informs prospective comments of the change and sets a new date of August 11, 1999, for the end of the comment period.

DATES: Written comments will be accepted until the close of business on August 11, 1999. Notification of interest in participating in the public workshop must be submitted separately on or before August 11, 1999.

ADDRESSES: Written comments should be identified as ''16 CFR part 453'' and submitted to: Secretary, Federal Trade Commission, Room H–159, 600 Pennsylvania Ave., NW, Washington, DC 20580. See **SUPPLEMENTARY INFORMATION** for future details.

All comments will be placed on the public record and will be available for public inspection in accordance with the Freedom of Information Act, 5 U.S.C. 552, and the Commission's Rules of Practice, 16 CFR 4.11, during normal business days from 8:30 a.m. to 5 p.m., at the Public Reference Room, Room 130, Federal Trade Commission, 600 Pennsylvania Ave., N.W. Washington, DC 20580. In addition, comments will be posted ont he Internet at the FTC's web site: ''*www.ftc.gov*.''

Notification on interest in participating in the Public Workshop-Conference should be submitted in writing on or before August 11, 1999, to Myra Howard, Division of Marketing Practices, Federal Trade Commission, 600 Pennsylvania Ave., N.W., Washington, DC 20580.

FOR FURTHER INFORMATION CONTACT: Myra Howard, (202) 326–2047, or Mercedes Kelley, (202) 326–3665, Division of Marketing Practices, Federal Trade Commission, 600 Pennsylvania Ave., N.W., Washington, DC 20580.

SUPPLEMENTARY INFORMATION: On May 5, 1999, the Commission published in the **Federal Register** a Request for Comment on its Funeral Industry Practices Rule (''Funeral Rule'' or ''Rule''), 16 CFR part 453, as part of its regulatory review program. 64 FR 24250. The Funeral Rule details a number of unfair and deceptive practices relating to providers of funeral goods and services, and sets forth preventive requirements in the form of price and information disclosures to ensure the funeral providers avoid engaging in the enumerated unfair or deceptive acts or practices. The **Federal Register** notice (''notice'') posed thirty questions in all; some were general regulatory review questions, while others asked about material issues that are specific to the Funeral Rule and the funeral industry. The notice requested commenters to provide answers where possible, and specifically asked for data, surveys and empirical evidence to support comments submitted to the Commission. Pursuant to the **Federal Register** notice, the comment period currently ends on July 12, 1999.

Between June 11, 1999, and June 16, 1999, staff have received requests for a modest extension of the comment period from four separate organizations representing a variety of viewpoints on the Rule—the National Funeral Directors Association (''NFDA''), the American Association of Retired Persons (''AARP''), the Funeral and Memorial Societies of America, Inc. (''FAMSA''), and the Monument Builders of North America (''MBNA''). The parties indicated that additional time was required to prepare thorough, thoughtful responses to the questions contained in the **Federal Register** notice.

The Commission is mindful of the need to deal with this matter as expeditiously as possible. However, the Commission is also aware that some of the issues raised by the **Federal Register** notice are rather complex, and it welcomes as much substantive input as possible to facilitate its decisionmaking process. Accordingly, in order to provide sufficient time for these and other interested parties to prepare useful comments, the Commission has decided to extend the deadline for comments by thirty (30) days, until August 11, 1999.

Additional Comment Information

The Commission requests that commenters submit the original plus five copies, if feasible. To enable prompt review and public access, all written comments should also be submitted, if possible, in electronic form. To submit

in electronic form, provide the comment on either a 5¼″ or a 3½″ computer disk. The disk should be labeled with the commenter's name and the name and version of the word processing program used to create the document. (Programs based on DOS or Windows are preferred. Files from other operating systems should be submitted in ASCII text format). Alternatively, the Commission will also accept comments submitted to the following E-Mail address: ''FUNERAL@ftc.gov.'' Individual members of the public who will be filing comments need not submit multiple copies and need not submit their comments in electronic form.

List of Subjects in 16 CFR Part 453

Funerals, Trade practices.

By direction of the Commission.

Benjamin I. Berman,

Acting Secretary.

[FR Doc. 99–16767 Filed 7–1–99; 8:45 am]

BILLING CODE 6750–01–M

DEPARTMENT OF HEALTH AND HUMAN SERVICES

Food and Drug Administration

21 CFR Parts 510, 514, and 558

[Docket No. 99N–1591]

Animal Drug Availability Act; Veterinary Feed Directive

AGENCY: Food and Drug Administration, HHS.

ACTION: Proposed rule.

SUMMARY: The Food and Drug Administration (FDA) is proposing to amend the animal drug regulations to implement the Veterinary Feed Directive (VFD) drugs section of the Animal Drug Availability Act (ADAA). A VFD drug is intended for use in animal feeds, and such use of the VFD drug is permitted only under the professional supervision of a licensed veterinarian. The proposed regulation would establish the requirements relating to the distribution and use of VFD drugs and animal feeds containing VFD drugs.

DATES: Written comments on this proposed rule must be submitted by September 30, 1999. Comments on the information collection provisions must be submitted by August 2, 1999.

ADDRESSES: Submit written comments on this proposed rule to the Dockets Management Branch (HFA–305), Food and Drug Administration, 5630 Fishers Lane, rm. 1061, Rockville, MD 20852. Submit written comments regarding the information collection to the Office of Information and Regulatory Affairs, Office of Management and Budget (OMB), New Executive Bldg., 725 17th St. NW., rm. 10235, Washington, DC 20503, Attn: Wendy Taylor, Desk Officer for FDA. All comments must be identified with the docket number found in brackets in the heading of this document.

FOR FURTHER INFORMATION CONTACT: George Graber, Center for Veterinary Medicine (HFV–220), Food and Drug Administration, 7500 Standish Pl., Rockville, MD 20855, 301–827–6651, e-mail: ggraber@cvm.fda.gov.

SUPPLEMENTARY INFORMATION:

I. Background

FDA has determined that certain new animal drugs, vital to animal health, should be approved for use in animal feed, but only if such medicated feeds are administered under a veterinarian's order and supervision. This limitation is important for a number of reasons. For example, control of the usage of certain antimicrobials is critical to reducing unnecessary use of such drugs in animals and to slowing or preventing the development of bacterial resistance to antimicrobial drugs. In addition, safety concerns relating to, among other things, difficulty in diagnosing disease conditions and high toxicity may also require that the use of a drug in animal feed be limited to use by order and under the supervision of a licensed veterinarian.

Before the passage of the ADAA, the Federal Food, Drug, and Cosmetic Act (the act) provided FDA only two options for regulating the distribution of animal drugs: Over-the-counter (OTC) and prescription. Although prescription status affords certain controls, the regulation of animal drugs for use in medicated feeds under traditional prescription systems has proven unworkable. The prescription legend invokes the application of State pharmacy laws, and FDA usually defers to State law concerning dispensing of prescription drugs. Pharmacy laws in a significant number of States prohibit feed manufacturers from possessing and dispensing prescription animal drugs and medicated feed containing those drugs. Pharmacy laws in other States require the presence of a pharmacist at the feed manufacturing facility that uses prescription drugs in the manufacture of medicated feeds. As a practical matter, the application of State pharmacy laws to medicated feeds would burden State pharmacy boards and impose costs on animal feed manufacturers to such an extent that it would be impractical to make these critically needed new animal drugs available for animal therapy. After considerable deliberation with, and support from, the Coalition for Animal Health, and with support from State regulatory agencies, Congress enacted legislation in 1996 establishing a new class of restricted feed use drugs that may be distributed without invoking State pharmacy laws. The ADAA (Pub. L. 104–250) amended the act to create section 504 (21 U.S.C. 354), VFD drugs.

Although statutory controls on the distribution and use of VFD drugs are similar to those for prescription animal drugs regulated under section 503(f) of the act (21 U.S.C. 353(f)), the proposed implementing VFD regulations are tailored to the unique circumstances relating to the distribution of animal feeds containing a VFD drug. This proposal would ensure the protection of public health while enabling animal producers to obtain and use needed drugs as efficiently and cost-effectively as possible. Unlike prescription drugs, VFD drugs would not be regulated by State pharmacy bodies. Historically, FDA has cooperated with State feed control offices in regulating the manufacture and use of medicated feeds. Investigations and inspections to measure compliance at FDA licensed feed manufacturing establishments are carried out by FDA or by State feed regulatory personnel commissioned by FDA. Most States maintain active inspection programs for medicated feed establishments that are not required to be licensed by FDA. We anticipate that State feed offices will continue assisting FDA by enforcing VFD regulations.

To date, one VFD drug has been approved; tilmicosin, an antimicrobial approved for administration via animal feed for control of swine respiratory diseases (§ 558.618 (21 CFR 558.618)). The regulation for tilmicosin, in addition to specifying the approved conditions of use, describes the information that the attending veterinarian must provide as part of the VFD form. At the time of publication of the final rule for VFD's, the regulation at § 558.618 will be amended, if needed, to be consistent with the final rule.

II. Discussion of the Proposed Rule

By amending part 558 (21 CFR part 558), the proposed rule would implement section 504 of the act, which created VFD drugs. Specifically, the proposed rule would amend § 558.3(b) by adding necessary definitions at § 558.3(b)(6) through (b)(11). The proposed rule would also redefine Category II drugs at § 558.3(b)(1)(ii) to include all VFD drugs, a reflection of

our safety concerns for all medicated feeds containing VFD drugs. A proposed new § 558.6 would be added to list the requirements for the distribution and use of VFD drugs and feeds that contain VFD drugs.

A VFD drug is limited to use under a valid veterinary-client-patient relationship where the veterinarian assumes the responsibility for safe and effective use of the VFD and the client has agreed to follow the instructions of the veterinarian. Proposed § 558.6(a)(1) through (a)(4) lists the responsibilities of the veterinarian issuing a VFD.

The information required to be included in the VFD will vary from drug to drug. Proposed § 558.6(a)(5) describes information that may be required in a VFD. The specific VFD approval regulation will identify the information required in a VFD for a particular animal drug. FDA is particularly concerned that VFD drugs be used only in accordance with the approved uses.

The length of time a VFD may be valid (expiration date) and the number of refills or reorders, if any, that will be permitted will be specific to the VFD drug. As part of the VFD drug approval process, FDA will determine whether refills or reorders are allowed, and if so, the number of refills or reorders. We request your comment on this proposed approach and on how much latitude should be given the veterinarian in ordering use of VFD drugs consistent with the control over drug use as envisioned by the ADAA; i.e., should reorders be permitted and for what length of time should the order be valid? The American Association of Swine Practitioners (AASP) addressed this issue in a response dated January 20, 1997, to the ADAA advanced notice of proposed rulemaking in the **Federal Register** of November 21, 1996 (61 FR 59209) (Docket No. 96N–0411). The AASP stated that it is imperative that the rule allow flexibility in issuance and content of the VFD in order to be practical in its application to various types of production systems. For example, the AASP inquired whether a single VFD can be applicable to multiple groups of pigs when a farm's history predicts recurring disease outbreaks in the transition between production stages, such as postweaning.

As a practical matter, FDA anticipates that practicing veterinarians would not want to attempt to create their own practice-specific VFD's because of the time involved and the amount of specific information required. We expect VFD drug manufacturers to provide veterinarians with preprinted VFD's in triplicate. We are thus proposing to amend § 514.1(b)(9) (21 CFR 514.1(b)(9)) to require submission of a VFD format as a part of the new animal drug application (NADA) for each VFD drug.

Proposed § 558.6(b)(1), (b)(2), and (b)(3) describe the proper distribution and recordkeeping requirements for each of the three copies of the VFD. The client and the veterinarian each keep a copy, and the original is given to the distributor supplying the VFD feed to the client. Under proposed § 558.6(b)(4), to expedite delivery, a veterinarian may fax a VFD to the distributor provided the veterinarian immediately forwards the original to the distributor and a copy to the client. Proposed § 558.6(c) would require that the involved parties (veterinarian, distributor, and client) keep the VFD for 2 years after the date of issuance and make it available for inspection and copying by FDA.

In addition to facsimile transmission of VFD's, we are considering permitting the veterinarian to telephone or e-mail VFD orders to the distributor. This would facilitate rapid movement of VFD feeds when immediate personal contact among the veterinarian, client, and distributor is not practical, and the situation demands the VFD feed be fed immediately to the animals. This approach would require that the veterinarian provide complete VFD information to the feed distributor by telephone or electronic means. In the case of telephone orders, the distributor would be responsible for reducing the telephone order to writing and keeping this order in its files. The veterinarian would follow the telephone call with prompt issuance of a signed, written VFD to the distributor and a copy to the client. Even though use of either electronic transmission or telephone will require that the veterinarian followup with signed written copies to both distributor and client, there is still concern about telephone orders. A concern is that there will be less control over the distribution process when the required information is not initially in writing, and reliance is placed on the client or distributor for proper interpretation of oral instructions. We are seeking comments on the policy reflected in the proposed rule allowing only fascimile transmission of VFD's, and whether that policy should be changed to allow use of the telephone and e-mail for transmitting VFD orders. Specifically, we invite comments on how to ensure transmission of clear, complete, and secure information via telephone or electronic means, and on the mechanics of promptly providing a signed copy of the VFD to all involved parties while avoiding undue duplication of effort and paperwork.

Proposed § 558.6(d)(1) discusses the statutory requirement of ADAA that all distributors of medicated feed containing VFD drugs, whether feed manufacturers or other suppliers in the feed distribution chain, notify us of their intent to distribute such feed upon first engaging in distribution. A ''distributor'' is defined in proposed § 558.3(b)(9) as any person who distributes a medicated animal feed containing a VFD drug to a client who presents a VFD or to another distributor. The term ''distributor'' includes all entities marketing VFD feeds, from the manufacturer of such feed to all suppliers in the distribution chain. To assist us in maintaining an accurate data base of distributors, proposed § 558.6(d)(1)(iv) would require that distributors notify us within 30 days if they change business name or address. We regard this as an extension of § 558.6(d)(1) notification requirement, necessary to keep original notification information current.

To accommodate the many levels of distribution, proposed § 558.6(d)(2) would allow a distributor to ship medicated feeds containing a VFD drug to a consignee in the absence of a VFD. The regulations would only allow this if the consignee furnishes an ''acknowledgment letter'' affirming that it will only distribute medicated feed bearing or containing a VFD drug to a VFD holder or another distributor who furnishes a similar acknowledgment letter. Proposed § 558.6(d)(2) also is intended to ensure that all parties involved in distribution of VFD drugs understand the requirement of shipping medicated animal feeds containing VFD drugs only to consignees who have notified FDA. Proposed § 558.6(e)(ii) would require that distributors keep records of receipt and distribution of all medicated animal feeds containing VFD drugs. We believe that the usual and customary records of purchase and sales kept by distributors will satisfy this requirement. FDA would examine receipt and distribution records to verify compliance with these proposed regulations.

Proposed § 558.6(f) would specify the wording of a cautionary statement that is required by statute to be included in all labeling and advertising for VFD drugs and medicated feeds containing VFD drugs. This ''cautionary'' labeling requirement is exempt from the scope of the Paperwork Reduction Act (the PRA) because it is a ''public disclosure of information originally supplied by the Federal Government for the purpose of disclosure to the public'' (5 CFR 1320.3(c)(2)).

Under section 512(a)(1) of the act (21 U.S.C. 360b(a)(1)), an animal drug is unsafe unless it is approved and its labeling and use comply with the approval. In addition, section 512(a)(4) of the act, which allows for some extra-label use of animal drugs, specifically prohibits extra-label use in animal feed. This prohibits the extra-label use of VFD drugs in animal feed. Therefore, a VFD drug not used in accord with its approval would be an unapproved new animal drug and would be considered to be unsafe under section 512 of the act. Consequently, the VFD drug would be adulterated under section 501(a)(5) of the act (21 U.S.C. 351(a)(5)), and an animal feed bearing or containing such VFD drug would be adulterated under section 501(a)(6) of the act. A VFD drug and any feed bearing or containing a VFD drug would be considered to be misbranded under section 504(b) of the act if the labeling or advertising fails to contain the cautionary statements prescribed in these regulations or fails to conform to the approved conditions and indications for use.

In order to implement those provisions of the act prohibiting extra-label use and promotion of VFD drugs, and to clarify that reporting and recordkeeping requirements for labeling and promotional material under § 510.300 (21 CFR 510.300) are also applicable to VFD drugs, the proposed rule would revise § 510.300(a)(4) to add ''or a veterinary feed directive drug'' after ''if it is a prescription new animal drug.'' This would require that promotional material for VFD drugs be submitted at the time of initial dissemination and publication in accord with § 510.300(a)(4) and (b)(3), respectively.

III. Environmental Impact

The agency has determined under 21 CFR 25.30(h) that this action is of a type that does not individually or cumulatively have a significant effect on the human environment. Therefore, neither an environmental assessment nor an environmental impact statement is required.

IV. Analysis of Impacts

FDA has examined the impact of the proposed rule under Executive Order 12866, under the Regulatory Flexibility Act (5 U.S.C. 601–612), and under the Unfunded Mandates Reform Act (Pub. L. 104–4). Executive Order 12866 directs agencies to assess all costs and benefits of available regulatory alternatives and, when regulation is necessary, to select regulatory approaches that maximize net benefits (including potential economic, environmental, public health and safety, and other advantages; distributive impacts; and equity). The Regulatory Flexibility Act requires agencies to examine regulatory alternatives for small entities if the rule may have a significant impact on a substantial number of small entities. The Unfunded Mandates Reform Act requires agencies to prepare an assessment of anticipated costs and benefits before enacting any rule that may result in an expenditure in any one year by State, local, and tribal governments, in the aggregate, or by the private sector, of $100 million (adjusted annually for inflation).

FDA concludes that this proposed rule is consistent with the principles set forth in the Executive Order and in these two statutes. We estimate that the present value of the proposed rule's annual compliance costs on industry in the first year would range from about $315,000 to $571,000. These costs will increase yearly as more VFD drugs are approved and should total about $2.8 million in year 10 (after amortization at a 7-percent discount rate). It is important to note that these costs will be incurred each year only if those using this new class of drugs believe that the accompanying health benefits outweigh these costs. As a result, the proposed rule is not a significant regulatory action as defined by the Executive Order and so is not subject to review under the Executive Order. We have further determined that the proposed rule will not have a significant economic impact on a substantial number of small entities. Further, because this proposed rule makes no mandates on other government entities and will result in expenditures of less than $100 million by the private sector in any one year, we need not prepare additional analyses under the Unfunded Mandates Reform Act.

FDA is proposing to amend the animal drug regulations to reflect the creation of a new category of drugs for use in animal feeds, referred to as VFD drugs. A VFD drug is a drug intended for use in or on animal feed that is limited to use under the professional supervision of a licensed veterinarian. Certain drugs can be approved for feed use only if used under a veterinarian's supervision. Statutory creation of VFD drugs provides the agency with a means for controlling the distribution and use of certain animal drugs that is more practical and less burdensome to industry than the existing prescription system. The proposed new system would be as effective as the prescription drug system in controlling the distribution and use of VFD drugs, but with requirements tailored to the unique circumstances that exist for the distribution of medicated feeds. The most critical aspect of this system is the direct involvement of a veterinarian in the selection and use of the VFD drug. Thus, the proposal would maintain public health protection while enabling livestock producers to obtain needed drugs as efficiently and cost-effectively as possible.

A. Benefits

Quantifying the benefits of the new system for VFD drugs is difficult because it requires that the treatment benefits of each VFD drug be compared to the drug that it replaces in the treatment regimen. Because almost all of the VFD drugs are as yet unidentified, it is not possible to make these determinations. It is reasonable, however, to assume that because each VFD drug would be assigned the VFD classification during the drug approval process, each drug would have some safety or toxicity concerns that would prevent its approval as an OTC drug for use in feed. Because these drugs would otherwise have to be approved in a prescription drug form, the proposed VFD drug rules provide for greater availability and use. Moreover, because the rule does not require that a VFD drug be used in place of either OTC medicated feeds or prescription drugs in a nonfeed form, consumers (veterinarians and animal producers) are expected to use VFD drugs only where they believe that the VFD drug's benefits outweigh their costs.

B. Costs

Complying with the VFD drug provisions would impose some costs on industry and government. A percentage of these costs, however, or even an amount greater than the costs shown here, would be incurred independently of the VFD rules if the same animal drug and its approved indication for treatment were approved under the current animal drug approval system as a prescription drug intended for use other than in or on an animal feed. From a broader perspective, therefore, the rule may result in a decrease in net costs, or a net benefit to the industry, as the VFD drug rule requirements may be less costly than the prescription drug requirements.

The costs imposed by the VFD drug proposal are dependent on the number of drugs that would be approved each year as VFD drugs. Although it is difficult to predict this number, because the VFD drugs are a new creation, the agency estimates that the average number of animal drugs that would be approved as VFD drugs is about one per

year. Likewise, the number of VFD's that will be issued annually is dependent on many factors, some of which are difficult to predict. For purposes of this analysis, however, the agency assumes that each VFD drug will be issued from 250,000 to 500,000 times each year. Due to the uncertainty surrounding this initial estimate, the agency invites comment on the appropriate number of times an average VFD drug will be issued annually.

The VFD system is intended to retain the existing distribution mechanisms for drugs intended for use in feeds and for medicated feeds while maintaining more control over the availability of certain animal drugs that are intended for use in animal feed and that raise safety issues. The major cost of compliance would result from the paperwork that would be necessary to track the VFD drugs and feeds. One of the cost components would be the cost of filing the VFD's by the veterinarian, distributor, and animal producer. The agency estimates that filing each VFD by the veterinarian, distributor, and animal producer or their records clerks will take only about 1 minute. The first year cost of this task is estimated to total $218,000 to $437,000 based on the hourly wages for records clerks and animal producers calculated from data in *Employment and Earning*, pp. 206 and 209, January 1996; and *Monthly Labor Review*, p. 76, September 1997. After the VFD drug system becomes more routine and the total number of VFD's issued increases with the years, it is likely that the compliance time per VFD will decrease.

Another first year cost is the requirement that VFD drug distributors notify FDA of their intent to distribute the drugs. The agency estimates that there will be up to 20,000 distributors over time, but that only about 25 percent of them will notify the agency in the first year. Based on agency estimates of 15 minutes to write the notification at a middle manager's wage of about $19 per hour, and 10 minutes for a GS–7 Government employee to process the notification, total notification costs in the first year are estimated at about $35,000. We cannot estimate the cost of the requirement that distributors notify us when they change their business name or address, but believe it to be negligible. The compliance cost of the VFD, whether by the VFD drug manufacturer or the veterinarian, is estimated at about $1,000 for the initial one page layout and $0.05 for each triplicate form. This amounts to $14,000 to $26,000 per year per VFD drug. The $1,000 cost for the layout (format) would be incurred by the VFD drug sponsor under the proposal in § 514.1(b)(9) to require submission of the format with the NADA. Storage costs for the normal three copies of the VFD previously mentioned, and fax copies if that form of transmission is used, amount to $25,000 to $50,000 in the first year, assuming that about 15,000 copies fit into a large file cabinet at about $500 per cabinet.

The final compliance cost concerns the acknowledgment letters written by the distributors of the VFD drugs. We estimate that about 5,000 letters will be written annually for the first 3 years and that each letter will take 15 minutes to prepare. At the middle manager's wage rate mentioned previously, we estimate this provision to cost only about $24,000 annually for the first 3 years.

In sum, FDA estimates the total first year compliance costs to be from about $315,000 to $571,000, including costs to both industry and government, or about $1.25 per VFD issued. FDA has not included the cost of the veterinarian's time to write and explain the VFD to the animal producer because it is very likely that a comparable amount of time would be spent by veterinarians counseling animal producers in other animal treatments in the absence of the VFD drug system. Regardless, the net effect of the entire VFD drug system is expected to be a net benefit, or decrease in net costs, as the consumers of these drugs will only use them if they expect a greater net benefit over currently available treatment alternatives.

In future years, compliance costs would increase for several reasons. First, distributor notifications would increase in the second year as an estimated 75 percent of those that do not notify us in the first year perform this obligation (this rate may be overestimated to the extent that it takes more years before all distributors begin to handle medicated feeds containing VFD drugs). Second, and more importantly, there may be, on average, about one more VFD drug approved in each succeeding year that would steadily increase the total issuance and filing costs. Compliance costs per VFD issued, however, would decrease slightly in the future because the one-time-only costs already would have been incurred.

The estimated total nondiscounted compliance costs in year 2 range from about $640,000 to $1,151,000. Discounting these costs at 7 percent per year results in a final second year cost estimate of about $598,000 to $1,076,000. At some year in the future, the increasing number of VFD's issued will reach a point at which issuances of the newly approved VFD's will be offset by the decreasing issuances of older VFD's as their sales volume decreases. Although the agency does not know in which year this will occur, it can be determined that the present value of the annual compliance costs will not continue to increase. The agency invites comment on all compliance cost estimates included in this analysis.

C. Regulatory Flexibility Analysis

The Small Business Administration (SBA) defines all manufacturers of drugs and prepared feeds for animals having 500 employees or fewer to be a small business. We have included feed distributors in this category also. FDA estimates that only about 2 percent of the affected facilities belong to large conglomerates with an overall employee count of higher than 500. Therefore, the remaining 98 percent of the affected facilities would be considered small businesses according to SBA's standards. SBA defines veterinary services for livestock as small businesses if annual revenues are less than $5 million. Because, according to the American Veterinary Medical Association, ''Veterinary Market Statistics, 1997,'' large animal veterinarians earn about $60,000 per year on average, the agency assumes that virtually all large animal veterinary practices are small businesses. Likewise, most livestock production facilities would be considered small businesses by SBA, because SBA defines small business as those businesses with revenues under $500,000, except for beef cattle feedlots, for which the limit is $1.5 million. Consequently, the proposed rule would ultimately affect a substantial number of small businesses. The rule will not, however, have a significant effect on these small business, as the cost of the additional veterinary service and paperwork burdens are estimated at about $1.25 per VFD issued. Such costs would constitute an insignificant percentage of the revenue of the affected firms even if several VFD drugs are issued to a producer each year. Thus, in accordance with the Regulatory Flexibility Act, FDA certifies that this proposed rule would not have a significant economic impact on a substantial number of small entities.

D. Unfunded Mandate Reform Act

The Unfunded Mandates Reform Act requires (section 202) that agencies prepare an assessment of anticipated costs and benefits before proposing any expenditure by State, local, and tribal governments, in the aggregate, or by the private sector of $100 million (adjusted

annually for inflation) in any one year. The publication of the proposal creating the VFD drug system is not expected to result in expenditures of funds by State, local, and tribal governments or the private sector in excess of $100 million annually. Therefore, FDA is not required to perform a cost/benefit analysis according to the Unfunded Mandates Reform Act.

V. Paperwork Reduction Act of 1995

This proposed rule contains information collection provisions that are subject to review by OMB under the PRA (44 U.S.C. 3501–3520). The title, description, and respondent description of the information collection provisions are shown in this section V with an estimate of the annual reporting and recordkeeping burden (Tables 1 and 2 of this document). Included in the estimate is the time for reviewing instructions, searching existing data sources, gathering and maintaining the data needed, and completing and reviewing each collection of information.

FDA invites comments on: (1) Whether the proposed collection of information is necessary for the proper performance of our functions, including whether the information will have practical utility; (2) the accuracy of our estimate of the burden of the proposed collection of information, including the validity of the methodology and assumptions used; (3) ways to enhance the quality, utility, and clarity of the information to be collected; and (4) ways to minimize the burden of the collection of information on respondents, including through the use of automated collection techniques, when appropriate, and other forms of information technology.

Title: Veterinary Feed Directives.

Description: The proposed rule implements provisions of the ADAA of 1996 (Pub. L. 104–250), which, by adding section 504 to the act, created a new class of animal drugs called VFD drugs. The proposed rule establishes regulatory requirements for the distribution and use of VFD drugs. VFD drugs are new animal drugs intended for use in or on animal feed whereby such use is permitted only under the professional supervision of a licensed veterinarian operating within the confines of a valid veterinarian-client-patient relationship.

The VFD ordered by the veterinarian must be issued in accordance with the format described under proposed § 558.6(a). We are proposing to amend the new animal drug regulations in § 514.1(b)(9) to require the VFD drug sponsor to submit such format as part of the NADA. The format may be used by the sponsor to produce forms in triplicate for use by the veterinarian or it may be supplied to the veterinarian for use in preparing a practice-specific form. Veterinarians are required to complete the VFD in triplicate, authorizing a client-recipient to obtain and use a medicated feed containing a VFD drug. The original copy of the VFD must be forwarded either by the veterinarian or the client-recipient to the distributor providing the VFD. In addition, the veterinarian issuing the VFD and the client-recipient of the VFD must retain a copy of each VFD for 2 years from date of issuance. Any person who distributes medicated feed containing VFD drugs must file with us a one time notification letter of intent to distribute, and retain a copy of each VFD serviced or each consignee's acknowledgment letter for 2 years. Distributors are also required to keep records of receipt and distribution of medicated animal feeds containing VFD drugs for 2 years. An acknowledgment letter must be provided to a distributor by a consignee who is not the ultimate user of the medicated feed containing a VFD drug. The acknowledgment letter affirms that the consignee will not ship such medicated animal feed to an animal production facility that does not have a VFD, and will not ship such feed to another distributor without receiving a similar acknowledgment letter. To maintain an accurate data base for distributors of VFD drugs, a distributor is required to notify us of any change in name or business address.

Certain capital costs are involved with respect to the reporting and recordkeeping requirements for VFD drugs. Specific details of cost estimates are found in section IV.B of this document. We estimate that approximately 375,000 VFD's will issue annually. The estimated cost for producing 375,000 VFD's in triplicate annually is $19,750 ($1,000 for the initial one-page layout and $0.05 for each triplicate form). For maintaining records of VFD's, the estimated cost is $37,500. This cost estimate is based on the fact that the veterinarian, client-recipient and distributor must each keep a copy of the VFD. Thus, a total of 1,125,000 copies of VFD's will be filed (375,000 VFD's x 3). We estimate that it will take 75 large file cabinets to store all copies of VFD's, assuming 15,000 copies can be stored in a large file cabinet. The estimated cost per file cabinet is $500, resulting in a total cost of $37,500 (75 cabinets x $500).

Description of Respondents: Veterinarians, distributors of animal feeds containing VFD drugs, and clients utilizing medicated feeds containing VFD drugs.

TABLE 1.—ESTIMATED ANNUAL REPORTING BURDEN[1]

21 CFR Sections	No. of Respondents	Annual Frequency per Response	Total Annual Responses	Hours per Response	Total Hours	Capital Costs
558.6(a)(3) through (a)(5)	15,000	25	375,000	0.25	93,750	$12,250
558.6(d)(1)(i) through (d)(1)(iii)	5,000	1	5,000	0.25	1,250	
558.6(d)(1)(iv)	100	1	100	0.25	25	
558.6(d)(2)	5,000	1	5,000	0.25	1,250	
514.1(b)(9)	1	1	1	3.0	3	
Total hours/cost					96,278	12,250

[1]There are no operating or maintenance costs associated with this collection of information.

TABLE 2.—ESTIMATED ANNUAL RECORDKEEPING BURDEN[1]

21 CFR Sections	No. of Recordkeepers	Annual Frequency per Recordkeeping	Total Annual Records	Hours per Recordkeeper	Total Hours	Capital Costs
558.6(c)(1) and (d)(2)(i)	112,500	10	1,125,000	.0167	18,788	$37,500
558.6(e)(ii)	5,000	75	375,000	.0167	6,263	
Total hours/cost					25,051	37,500

[1]There are no operating or maintenance costs associated with this collection of information.

To permit FDA to implement certain provisions of the VFD procedure, the OMB approved a portion of this collection of information under the emergency processing provisions of the PRA (5 CFR 1320.13), on a temporary basis, OMB control number 0910–0363. Estimates in the preceding burden chart have been changed from those in the emergency approval (62 FR 64847, December 9, 1997) based upon FDA's experience in implementing certain elements of the VFD procedure.

In compliance with section 3507(d) of the PRA (44 U.S.C. 3507(d)), FDA submitted to OMB the information collection provisions of this proposed rule for review. Interested persons are requested to send comments regarding this burden estimate or any other aspect of this information collection, including suggestions for reducing the burden, by August 2, 1999, to the Office of Information and Regulatory Affairs, (address above).

VI. Public Comments Procedures

On June 1, 1998, the President instructed all Federal agencies to ensure the use of ''plain language'' in all new documents. As part of this initiative, FDA has drafted the codified portion of this document using the principles of ''plain language'' set forth by the President. The agency seeks public comment on the clarity of this proposed rule.

FDA invites interested persons to submit comments regarding these proposed regulations to the Dockets Management Branch (address above). To ensure that public comments have maximum effect in developing the final regulations, FDA urges you to identify clearly the specific section or sections of the proposed regulation that each comment addresses. Comments should be confined to issues pertinent to the proposed rule and explain the reason for any recommended change. Comments are to be identified with the docket number found in brackets in the heading of this document. FDA will accept comments after the deadline September 30, 1999, but are not obligated to consider or include in the administrative record for the final rule those comments received after the close of the comment period. Received comments may be seen in the office above between 9 a.m. and 4:30 p.m., Monday through Friday.

List of Subjects

21 CFR part 510

Administrative practice and procedure, Animal drugs, Labeling, Reporting and recordkeeping requirements.

21 CFR part 514

Administrative practice and procedure, Animal drugs, Confidential business information, Reporting and recordkeeping requirements.

21 CFR part 558

Animal drugs, Animal feeds.

Therefore, under the Federal Food, Drug, and Cosmetic Act and under authority delegated to the Commissioner of Food and Drugs, it is proposed that 21 CFR parts 510, 514, and 558 be amended as follows:

PART 510—NEW ANIMAL DRUGS

1. The authority citation for 21 CFR part 510 continues to read as follows:

Authority: 21 U.S.C. 321, 331, 351, 352, 353, 360b, 371, 379e.

§ 510.300 [Amended]

2. Section 510.300 *Records and reports concerning experience with new animal drugs for which an approved application is in effect* is amended in paragraph (a)(4) by adding the phrase ''or a veterinary feed directive drug,'' after the phrase ''if it is a prescription new animal drug''.

PART 514—NEW ANIMAL DRUG APPLICATIONS

3. The authority citation for 21 CFR part 514 continues to read as follows:

Authority: 21 U.S.C. 351, 352, 360b, 371, 379e, 381.

4. Section 514.1 is amended by adding paragraph (b)(9) to read as follows:

§ 514.1 Applications.

* * * * *

(b) * * *

(9) *Veterinary feed directive (VFD).* Three copies must be submitted in the format described under § 558.6(a)(3), (a)(4), and (a)(5) of this chapter.

* * * * *

PART 558—NEW ANIMAL DRUGS FOR USE IN ANIMAL FEEDS

5. The authority citation for 21 CFR part 558 continues to read as follows:

Authority: 21 U.S.C. 360b, 371.

6. Section 558.3 is amended by revising paragraph (b)(1)(ii) and by adding paragraphs (b)(6) through (b)(11) to read as follows:

§ 558.3 Definitions and general considerations applicable to this part.

* * * * *

(b) * * *

(1) * * *

(ii) Category II—These drugs require a withdrawal period at the lowest use level for at least one species for which they are approved, or are regulated on a ''no-residue'' basis or with a zero tolerance because of a carcinogenic concern regardless of whether a withdrawal period is required, or are a veterinary feed directive drug.

* * * * *

(6) A ''veterinary feed directive (VFD) drug'' is a drug intended for use in or on animal feed and which is limited by an approved application filed under section 512(b) of the Federal Food, Drug, and Cosmetic Act to use by the order and under the professional supervision of a licensed veterinarian.

(7) A ''veterinary feed directive'' is a written statement issued by a licensed veterinarian in the course of the veterinarian's professional practice that orders the use of a veterinary feed directive drug in or on an animal feed. This written statement authorizes the client (the owner of the animal or animals or other caretaker) to obtain and use the veterinary feed directive drug in or on an animal feed to treat the client's animals only in accordance with the Food and Drug Administration

approved directions for use. A veterinarian may issue a VFD only if a valid veterinarian-client-patient relationship exists, as defined in § 530.3(i) of this chapter.

(8) A ''medicated feed'' means a Type B medicated feed as defined in paragraph (b)(3) of this section or a Type C medicated feed as defined in paragraph (b)(4) of this section.

(9) For the purposes of this part, a ''distributor' means any person who distributes a medicated feed containing a VFD drug to another distributor or to the client-recipient of the VFD.

(10) An ''animal production facility'' is a location where animals are raised for any purpose, but does not include the specific location where medicated feed is made.

(11) An ''acknowledgment letter'' is a written communication provided to a distributor by a consignee who is not the ultimate user of medicated feed containing a VFD drug. An acknowledgment letter affirms that the consignee will not ship such medicated animal feed to an animal production facility that does not have a VFD, and the consignee will not ship such feed to another distributor without receiving a similar written acknowledgment letter.

7. Section 558.6 is added to subpart A to read as follows:

§ 558.6 Veterinary feed directive drugs.

(a) What conditions must be met if I am a veterinarian issuing a veterinary feed directive?

(1) You must be appropriately licensed;

(2) You must issue a VFD only within the confines of a valid veterinarian-client-patient relationship (as defined in § 530.3(i) of this chapter) in accordance with the format described in paragraphs (a)(3), (a)(4), and (a)(5) of this section;

(3) You must complete the VFD in writing and sign it;

(4) You must produce the VFD in triplicate;

(5) You must include the following information in the VFD:

(i) Your name, address, and phone number and that of the client;

(ii) Identification and number of animals to be treated/fed the medicated feed, including identification of the species of animals, and the location of the animals;

(iii) Date of treatment and, if different, date of prescribing the VFD drug;

(iv) Approved indications for use;

(v) Name of the animal drug;

(vi) Level of animal drug in the feed, and the amount of feed required to treat the animals in paragraph (a)(5)(ii) of this section;

(vii) Feeding instructions with the withdrawal time;

(viii) Any special instructions and cautionary statements necessary for use of the drug in conformance with the approval;

(ix) Expiration date of the VFD;

(x) Number of refills (reorders) if necessary and permitted by the approval;

(xi) Your license number and the name of the State issuing the license; and,

(xii) The statement: ''Extra-label use, (i.e., Use of this VFD feed in a manner other than as provided for in the VFD drug approval) is strictly prohibited.''

(xiii) Any other information required by the VFD drug approval regulation.

(6) You must issue a VFD only for the approved conditions and indications for use of the VFD drug.

(b) What must I do with the VFD if I am a veterinarian?

(1) You must give the original VFD to the feed distributor (directly or through client);

(2) You must keep one copy of the VFD;

(3) You must give the client the second copy of the VFD;

(4) You may fax a VFD to the client or distributor, if you wish, provided you immediately forward the signed written original to the distributor and a copy to the client.

(c) What are the VFD recordkeeping requirements?

(1) The VFD must be kept by all involved parties (i.e., veterinarian, client, and VFD feed distributor) for a period of 2 years from date of issuance.

(2) The VFD must be made available by all involved parties for inspection and copying by FDA.

(3) VFD's transmitted by facsimile must be kept by all involved parties along with copies distributed by the veterinarian.

(d) What are the notification requirements if I am a distributor of animal feed containing a VFD drug?

(1) You must notify FDA only once, by letter, that you intend to distribute animal feed containing a VFD drug.

(i) The notification letter must include the complete name and address of each business site from which distribution will occur.

(ii) A responsible person from your firm must sign and date the notification letter.

(iii) You must submit the notification letter, prior to beginning your first distribution, to the Center for Veterinary Medicine, Division of Animal Feeds (HFV–220), 7500 Standish Pl., Rockville, MD 20855; and

(iv) You must notify the Center for Veterinary Medicine at the address provided in paragraph (d)(1)(iii) of this section within 30 days of any change in name or business address.

(2) If you are a distributor who ships an animal feed containing a VFD drug to another consignee-distributor in the absence of a valid VFD, you must obtain:

(i) An ''acknowledgment letter,'' as defined in § 558.3(b)(11) of this chapter, from the consignee-distributor; and

(ii) A statement affirming that the consignee-distributor has complied with ''Distributor Notification'' requirements of paragraph (d)(1) of this section.

(e) What are the recordkeeping requirements if I am a distributor?

(1) You must keep information specified in paragraph (c)(1) or paragraph (d)(2)(i) of this section;

(2) You must keep records of receipt and distribution of all medicated animal feed containing a VFD drug;

(3) You must keep these records for 2 years from date of receipt and distribution; and

(4) You must make records available for inspection and copying by FDA.

(f) What cautionary statements are required for VFD drugs and animal feeds containing VFD drugs? All labeling and advertising must prominently and conspicuously display the following cautionary statement: ''Caution: Federal law limits this VFD drug product to use under the professional supervision of a licensed veterinarian. Medicated feed bearing or containing a VFD drug may be fed to animals only when there exists a lawful veterinary feed directive issued by a licensed veterinarian in the course of the veterinarian's professional practice.''

Dated: June 25, 1999.

Margaret M. Dotzel,

Acting Associate Commissioner for Policy Coordination.

[FR Doc. 99–16857 Filed 7–1–99; 8:45 am]

BILLING CODE 4160–01–F

DEPARTMENT OF LABOR

Occupational Safety and Health Administration

29 CFR Part 1908

[Docket No. CO–5]

Consultation Agreements: Proposed Changes to Consultation Procedures

AGENCY: Occupational Safety and Health Administration (OSHA), U.S. Department of Labor.

ACTION: Proposed rule; request for comments.

SUMMARY: OSHA proposes to revise its regulations for federally-funded on-site

safety and health consultation visits to provide for greater employee involvement in site visits; to require that employees be informed of the results of these visits; to provide for the confidential treatment of information concerning workplace consultation visits; and to update its procedures for conducting consultation visits.

DATES: Written comments must be submitted on or before September 30, 1999.

ADDRESSES: Send two copies of your comments to: Docket Office, Docket No. C–05, Room N2625, Occupational Safety and Health Administration, U.S. Department of Labor, 200 Constitution Avenue, NW, Washington, DC 20210. Comments limited to 10 pages or fewer may also be transmitted by FAX to: 202–693–1648, provided that the original and one copy of the comment are sent to the Docket Office immediately thereafter.

Comments may also be submitted electronically through OSHA's Internet site at URL, http://www.osha/slc.gov/e-comments/e-comments-consult.html. Information such as studies and journal articles cannot be attached to electronic submissions and must be submitted in duplicate to the above address. Such attachments must clearly identify the respondent's electronic submission by name, date, and subject, so that they can be attached to the correct submission. The entire record for the Proposed Changes to the Consultation Procedures is available for inspection and copying in the Docket Office, Docket C–05, telephone 202–693–2350.

FOR FURTHER INFORMATION CONTACT: Bonnie Friedman, Director, Office of Information and Consumer Affairs-OSHA, Rm. N–3647, 200 Constitution Avenue NW, Washington DC 20210. Telephone: (202) 693–1999.

SUPPLEMENTARY INFORMATION:

I. Background

The OSHA On-Site Consultation Program

The Occupational Safety and Health Administration (OSHA), under cooperative agreements with agencies in 44 states, the District of Columbia, and several U.S. territories, administers and provides federal funding for an on-site consultation program which makes trained health and safety personnel available, at an employer's request and at no cost to the employer, to conduct worksite visits to identify occupational hazards and provide advice on compliance with OSHA regulations and standards. (In the remaining 6 states and 2 territories on-site consultation services are provided to small employers in the private sector as part of an OSHA-approved state plan funded by federal grants under section 23(g) of the Occupational Safety and Health (OSH) Act, rather than under cooperative agreements). Priority in providing on-site consultation visits is accorded to smaller employers in more hazardous industries. (Various OSHA directives currently specify that priority for consultation services be given to employers having not more than 250 workers at the site receiving the consultation, and no more than 500 workers nationwide). The consultation program was first authorized by Congressional appropriations action in 1974. On July 16, 1998, President Clinton signed into law the Occupational Safety and Health Administration Compliance Assistance Authorization Act (CAAA), Pub. L. 105–197, which codifies this important OSHA program as a new subsection 21(d) of the Occupational Safety and Health Act.

The OSHA on-site consultation program is administered in accordance with regulations at 29 CFR Part 1908. These regulations provide, among other things, rules and procedures for State consultants performing worksite visits. In the present **Federal Register** notice, OSHA proposes several revisions to these rules, and requests interested members of the public to submit any data, views, or arguments relevant to these proposed changes, during a 90-day public comment period.

II. Proposed Changes to 29 CFR 1908

Employee Walkaround Rights

Current consultation program regulations provide that employees, representatives of employees, and members of joint workplace safety and health committees may be allowed to accompany the consultant and the employer's representative during the on-site consultative visit ''to the extent desired by the employer'' [29 CFR 1908.6(c)(2)]. Although these regulations encourage, but do not require, the employer to accord ''walkaround'' rights to employee representatives, OSHA's procedures have for some time required that union representatives should be accorded walkaround rights during consultation visits to unionized workplaces. [*Consultation Policies and Procedures Manual,* TED 3.5B Chap.VI, p. VI–9 (1996)]. One of the goals established for OSHA by the National Performance Review in a 1995 report was to revise agency procedures to assure that employees are included in the consultation walkaround. [National Performance Review, *The New OSHA: Reinventing Worker Safety and Health* (May, 1995.)] Finally, the newly-enacted Compliance Assistance Authorization Act directs OSHA to require that states carrying out consultation visits ''ensure that on-site consultations * * * include provision for the participation by employees.''

OSHA strongly believes that active employee participation is essential to the success of any systematic effort to address health and safety issues in the workplace. Although the role of employees in consultation visits differs from their role in OSHA enforcement inspections, where employee representatives have statutory rights to participate both in the investigation and in subsequent enforcement litigation, there are many potential advantages to active employee involvement during a consultant's worksite visit. Employees often have firsthand knowledge of hazards in the workplace. Sometimes, employees are in a position to make valuable suggestions which can be of assistance in formulating the consultant's recommendations. OSHA also believes employee involvement during a consultation visit can be a stimulus to further employee involvement in an employer's ongoing health and safety effort.

In order to assure fuller participation by employees in the consultation process, OSHA is proposing to amend 29 CFR Part 1908 to expressly provide authorized employee representatives a right to accompany the consultant during the physical inspection of the workplace. Where there is no authorized employee representative, or if the representative cannot be determined, the consultant shall speak with a reasonable number of employees concerning matters of safety and health in the workplace. These general provisions are derived from the current employee walkaround provisions in 29 CFR Part 1903, OSHA's regulations on the conduct of enforcement visits. OSHA is further proposing that authorized employee representatives should be afforded the opportunity to participate in opening and closing conferences with the consultant (either separately or jointly with the employer).

Employee Notification of Hazards

The legislative history of the Compliance Assistance Authorization Act reflects a congressional expectation that in carrying out the mandate to provide for employee participation, information on hazards identified by the consultant and corrective actions proposed will be made available to

affected employees. [House Report 105–444 105th Cong., 2d Sess., 6–7]. The National Performance Review had earlier recommended that employees be furnished copies of the consultant's written report at the conclusion of each consultation visit. However, as is explained elsewhere in the present **Federal Register** notice, disclosure of the complete written report has traditionally been extremely limited. Present regulations protect the employer's right to keep the consultant's report confidential from OSHA enforcement officials [29 CFR 1908.7(a)(3); 1908.7(c)(3)]. It has also been the longstanding practice of state consultation agencies not to disclose these reports to anyone but the subject employer.

OSHA believes it is essential to an effective safety and health management system that employees be made aware of any significant hazards identified during the course of a consultation visit. At the same time, a consultation visit is a voluntary service provided to small employers who typically would be unable to afford the services of paid safety or health consultants. The visit is not an enforcement inspection which leads to the issuance of citations; involves the creation of inspection records, many of which will ultimately be subject to public disclosure; or has provisions that allow the employer to contest alleged violations. Consultation visits and subsequent reports reflect the best professional judgement of consultants, but the consultant's report of hazards does not have to meet all the legal standards required for the issuance of a citation for violation of OSHA regulations and/or the OSH Act. Further, the report often contains many details about business practices, processes and personnel not ordinarily made public by the employer. Moreover, the success of OSHA's consultation program depends to a great extent on the voluntary cooperation of employers who request its services; the confidentiality of the consultant's report has long been viewed by OSHA and state consultants as essential to continued participation by employers in this important program.

OSHA proposes to amend Part 1908 to require that a list of serious hazards and hazards addressed by OSHA rules that are identified by the consultant, the corrective action proposed, and the dates for completion of corrective action be forwarded to the employer at the same time the consultant's written report is furnished. OSHA also proposes that each employer be required to post this list in a prominent place that is readily observable by all affected employees, for 3 working days or until hazards are corrected, whichever is later. If an authorized employee representative has participated in the consultation visit, a copy of the posted list will be furnished directly to the authorized representative. At the same time, as discussed below, language would be added to 29 CFR part 1908 making clear that the full text of the consultant's written report to the employer remains confidential, and, except in certain unusual circumstances, can be disclosed to others only with the employer's consent.

Existing 29 CFR 1908.7(c), which deals with the effect of a prior consultation visit in the event of a subsequent OSHA enforcement inspection, is being updated. The current provision specifies at 1908.7(c)(3) that an employer is not required to furnish a copy of the consultant's written report to the compliance officer, except to the extent that disclosure of information in the report is required by 29 CFR 1910.20. The referenced regulation, OSHA's rule requiring that certain employee medical and exposure records be made available to employees and to OSHA, has been recodified at 29 CFR 1910.1020. Moreover, there are now a number of other provisions included in OSHA standards or regulations which require the sharing of safety- or health-related information which may in some instances be included in consultant's reports, [*see, e.g.* 29 CFR 1910.110(c)(3) (employee access to chemical process hazard analyses)]. Paragraph 1908.7(c) is therefore being updated to assure that information whose disclosure is specifically required by an OSHA standard or regulation must continue to be made available by the employer when such information has been included in a consultant's report.

Disclosure of Consultation-Related Information

1. Consultation Program Data

During the course of a consultation visit, the consultant gathers information and data about work processes, business practices, safety procedures, and accident or injury experience at an employer's workplace, all of which are needed in formulating advice for the employer on ways of complying with OSH Act requirements. Such information, gathered from employers during the course of a workplace consultation visit, is normally retained by the state consultation agency. OSHA regulations have always maintained the strict confidentiality of employer-specific consultation information from OSHA enforcement personnel, in order to assure employers who avail themselves of this service that their use of the consultation service will not be the basis for scheduling an OSHA enforcement inspection or for other enforcement-related purposes [29 CFR 1908.7(a)(3)].

Occasionally, non-enforcement federal OSHA personnel obtain access to confidential material during the course of evaluating state consultation programs or rendering program assistance. OSHA has had access to such information more frequently in recent years as the agency has begun to incorporate consultation program information in federal databases such as the Integrated Management Information System (IMIS.) Federally-collected management data includes, among other information, worksite-specific injury and illness rates for employers visited by consultants. In addition, some limited sharing of information with enforcement personnel is necessary to carry out the Safety and Health Achievement Recognition Program (SHARP), under which employers who successfully complete a consultation visit and satisfy certain other requirements may request an exemption from OSHA inspections [29 CFR 1908.7(b)(4)]. Lists of employers who have qualified for such an exemption must, of course, be made available to OSHA enforcement staff.

Consultation-related information retained by federal OSHA is generally subject to the federal Freedom of Information Act (FOIA), 5 U.S.C. 552. The FOIA provides that documents maintained by federal agencies must be disclosed upon request unless one of the nine exemptions listed in the Act applies. Exemption 4 of the FOIA exempts from disclosure ''commercial or financial information obtained from a person [that is] privileged or confidential.'' Information that relates to an employer's business decision to engage a consultant, and workplace information reviewed by that consultant during the visit, certainly qualifies as ''commercial'' information as that term has been broadly construed by the courts. Information collected by consultants under 29 CFR 1908 is clearly ''obtained from a person'' within the meaning of FOIA.

OSHA believes such information also qualifies as ''confidential'', the remaining criterion for non-disclosure under Exemption 4. Federal court decisions establish that commercial information voluntarily submitted by a person to the government is ''confidential'' if it is the kind of

information not customarily made public by the person from whom it was obtained. [*Critical Mass Energy Project* v. *NRC,* 975 F.2d 871 (''*Critical Mass III*'')(D.C. Cir.1992)]. Even if submission of the information was mandatory, the information qualifies as confidential under Exemption 4 if disclosure would impair the effectiveness of the government program under which the information was submitted. [*Critical Mass Energy Project* v. *NRC,* 931 F.2d 939, 944-45 (''*Critical Mass II*'')(D.C. Cir. 1990)].

As discussed above, 29 CFR Part 1908 provides that information about consultation visits must be kept confidential from OSHA enforcement personnel. The present regulation does not specifically address the broader issue of whether information concerning consultation visits to particular employers should be subject to public disclosure. However, as the federal grant agency and overall federal coordinator of the on-site consultation program, OSHA is well aware that state consultation providers have historically treated information about on-site consultation visits as a confidential business service to the employers who request it. OSHA believes that an employer's purely voluntary decision to invite a federally-funded consultant to evaluate conditions in his workplace, like the decisions made by other employers to retain paid, private sector health and safety consultants, is a decision an employer may, but should not be required to, disclose to the general public. OSHA's experience is that data and observations gathered by the consultant during the visit are also held in confidence by state agencies, in the same way a private consultant's recommendations would not ordinarily be made public by an employer.

Furthermore, a long-standing concern of consultation program administrators is that unwarranted publication of employer lists and other employer-specific program data will discourage many employers from availing themselves of this service. OSHA has long recognized the importance of preserving the confidentiality of employer-specific consultation program information, e.g., 42 FR 41386 at 41388 (August 16, 1977) (noting OSHA's policy that ''the identity of employers receiving on-site consultation is not revealed'').

Therefore, OSHA proposes to add a provision to existing Part 1908 specifying that consultation program information which identifies specific employers who have requested the services of a consultant under 29 CFR Part 1908 shall be kept confidential. This confidentiality requirement would not apply to the furnishing of certain types of employer specific data, such as the hazards identified and abatement suggested by the consultant, which must be provided to an employer's own workers and their representatives under the new consultation procedures in today's proposed rule. Because OSHA has an ongoing need for accurate and comprehensive consultation data to administer the consultation program and to evaluate its own performance and that of the states, OSHA retains a right of access to this data.

2. Consultant's Written Report

Every consultative visit under Part 1908 results in the preparation of a written report to the employer, documenting in detail the conditions observed by the consultant inside the workplace. Such reports can include descriptions not only of processes, methods and materials used in the employers's business but personnel and administrative information. Moreover, because of OSHA's emphasis on evaluating the quality of the employer's accident prevention programs, [*see* 1908.6(g) and 1908.7(b)(4)], many reports will also include critiques of employee and manager performance that relate to the effectiveness of the safety and health program. OSHA does not normally obtain a copy of the consultant's written report, and the employer is not required to furnish one should OSHA request to see it during a subsequent inspection [1908.7(c)(3)]. These reports have long been treated as confidential by state consultation agencies and by participating employers. As explained earlier in connection with consultation program data, state consultation agencies have advised OSHA that routine disclosure of these reports would adversely affect employer participation in the consultation program.

The proposed rule specifically recognizes the confidential nature of the consultant's written report and forbids the disclosure of the report except to the employer, and to OSHA upon request. OSHA retains the right to use a consultant's report in appropriate enforcement proceedings. Situations in which a consultation report might become relevant would include, among others, an enforcement action triggered by an employer's refusal to correct serious hazards identified by a consultant, or an investigation of false statements, or deliberately concealed hazards. Inquiries to OSHA's compliance staff during the preparation of the present proposed rule indicate that consultants' written reports have been used in extremely rare circumstances, probably no more than a half-a-dozen times in the last ten years, typically in cases involving serious accidents where there were allegations of employer bad faith. OSHA fully expects, based on past agency experience, that the enforcement cases in which it will be necessary to obtain and use consultant's reports developed under Part 1908 will continue to be extremely rare. OSHA intends to provide guidance concerning circumstances under which the Assistant Secretary may request a Consultant's written report, after discussion with the State. Finally, the access rights of employees and others to certain specific types of information identified by particular OSHA regulations and standards such as 1910.1020 will continue to apply to information incorporated in consultation reports. Under the proposed new regulation, as under existing Part 1908, the employer would of course be free to voluntarily disclose all or parts of the consultant's report.

The proposed changes to OSHA consultation regulations would be applicable only to information related to or generated by consultation visits scheduled or carried out under 29 CFR Part 1908. The OSHA consultation program is a unique federally-funded, state-administered consultation service. OSHA believes that the consultation program is carefully balanced to serve the objective of providing effective worker protection while at the same time affording a limited employer confidentiality as an incentive to employer participation. Because the OSHA consultation mechanism is a unique business service with numerous built-in compliance safeguards, the qualified confidentiality accorded to the consultant's written report and other employer-identifying information by the proposed regulation provides no basis for inferring a broader evidentiary privilege for employer audits or other self-evaluation materials.

Revisions Delineating the Relationship With OSHA Enforcement

Since its inception, OSHA has conducted the on-site consultation program independently from OSHA enforcement. Congress has endorsed OSHA's practice of independent management of the consultation program in the Compliance Assistance Authorization Act (CAAA), which specifies that ''(a)ctivities under this section shall be conducted independently of any enforcement activity.'' Nevertheless, the need to assure that workers are fully protected,

as well as the practical demands of program administration, require some limited coordination between these two OSHA activities. Thus, for example, OSHA regulations have long provided that employers failing to correct serious hazards identified by consultants be referred to enforcement, 29 CFR 1908.7(f)(4), and also provide for a one-year exemption from general schedule programmed inspections for employers who complete a consultation visit and meet the requirements set forth in paragraph 1908.7(b)(4). Congress itself has implicitly recognized the importance of limited coordination between OSHA's consultation and enforcement activities by incorporating comparable requirements in the CAAA.

Because an effective balance between consultation and enforcement is extremely important to OSHA as well as being an issue of interest to most affected parties, OSHA's proposed revisions to Part 1908 address this relationship in detail. OSHA's strategic plan includes the consultation projects as full partners. It is therefore important for the agency to eliminate administrative procedures that would result in duplication of effort between compliance and cooperative programs.

One area of potential duplication of effort is in the conduct of general schedule inspections at sites that receive consultation service, and are working within established time frames to correct hazards identified by the consultant. Current OSHA procedures provide that general schedule compliance inspections shall not be conducted at worksites where a consultation visit is ''in progress,'' a time period which presently is defined as ''from the beginning of the opening conference through the end of the closing conference''. [29 CFR 1908.7(b)(1)]. The agency believes that, for the working conditions, hazards or situations covered during the visit, the term ''visit in progress'' used in paragraph 1908.7(b) should extend from the date of the opening conference to the end of the correction due date agreed upon between the consultant and the employer, a redefinition reflected in the rule proposed today. This would avoid the duplication (and the burden to the small employer) of conducting an OSHA general schedule inspection on the heels of a consultation visit, while the employer is working to correct hazards. Proposed new language in part 1908 for employee notification about hazards and correction due dates, and OSHA's continuing obligation to perform certain types of inspections/investigations such as imminent danger, fatality or catastrophe, and complaint inspections, will ensure that adequate safeguards are in place for employee protection.

OSHA is also proposing to change paragraph 1908.7(b)(4), the Inspection Exemption Through Consultation (IETC), to reflect OSHA's current policy under the Safety and Health Achievement Recognition Program (SHARP). The SHARP policy, which has been in effect since 1995, also achieves one of the objectives of the Compliance Assistance Authorization Act. OSHA experience has shown that combining a national recognition program with an exemption program fosters a partnership that works for employees, employers, and for OSHA. SHARP achieves the unique objective of according national recognition and inspection exemption to small employers operating exemplary safety and health management systems at their worksites. The revised paragraph 1908.7(b)(4) incorporates the basic requirements of the SHARP and is consistent with the exemption program requirements outlined in the CAAA, now codified as section 21(d)(4) of the OSH Act. As an editorial matter, the generic term ''recognition and exemption program'' is used in the proposed regulation in lieu of terms like SHARP or IETC.

Consultation Programs and State Plans

The importance of recognition and exemption programs is also reflected in a proposed revision to paragraph 1908.1(c). That provision presently specifies that in states which administer OSHA-approved state plans, the provisions of Part 1908 which affect federal enforcement do not apply directly to state-administered enforcement programs, but the states must adopt enforcement provisions which are ''at least as effective'' as those of federal OSHA. The agency proposes to add specific requirements for recognition and exemption programs comparable to that outlined in the revised Part 1908 and mandated by section 21(d)(4) of the Act.

The recognition and exemption program involves coordination between two aspects of OSHA's program: the OSHA consultation service, which must conduct the consultation visit and employer evaluation specified in 21(d)(4); and OSHA's enforcement program, which honors the exemption from inspections granted to employers who successfully complete the relevant requirements. One potentially complicating factor in implementing the CAAA inspection exemption scheme is the division of work between federal OSHA and states which have assumed responsibility for various occupational safety and health issues under federally-approved state plans as provided by section 18 of the Act.

States may assume responsibility for occupational safety and health enforcement within their state by obtaining federal approval of a state plan under section 18 of the Act. Twenty-three states and two territories currently exercise enforcement responsibility under approved state plans. (A comprehensive listing of state plan states is set forth in 29 CFR Part 1952.) Enforcement programs under approved plans are not required to be identical to that of federal OSHA, but must be ''at least as effective.''

States that wish to carry out federally-funded on-site consultation services may do so by entering into cooperative agreements with OSHA under 29 CFR Part 1908 and section 21 of the Act. Many states which have entered into consultation agreements also separately administer a state enforcement program under a federally-approved state plan. Other states, however, have elected not to assume enforcement responsibility under a state plan, but only to conduct on-site consultation services within their state by entering into cooperative agreements under section 21 of the Act and Part 1908. Enforcement in these states is provided by federal OSHA. Finally, a few states and territories (currently Arizona; Indiana; Kentucky; Nevada; New Mexico; Washington; Puerto Rico; and the U.S. Virgin Islands) administer both enforcement and consultation service programs as part of their state plan.

As already discussed, exemption and recognition programs under section 21(d) of the Act serve the important purposes of conserving enforcement resources by diverting them away from sites which already are undergoing a comprehensive on-site safety and health review, and of worker protection by giving an incentive to small employers to undertake a program of hazard review and correction with participation by employees. Accordingly, the new paragraph 1908.1 would specify that every state providing a program of consultation services under a cooperative agreement pursuant to section 21(d) of the Act shall provide a recognition and exemption program which meets the criteria and procedures in paragraph 1908.7(b)(4). This basic program element must be provided in all states which provide consultation services under section 21(d) of the OSH Act and 29 CFR Part 1908, whether enforcement responsibility is carried out under a state plan or by federal OSHA.

States which elect to carry out both enforcement and consultation services

under a state plan pursuant to section 18 of the Act, in lieu of a cooperative agreement under section 21(d), would not be directly bound by requirements in section 21(d) and 29 CFR Part 1908. However, some form of inspection exemption and recognition program is, in OSHA's judgment, an essential element in any state program which seeks to meet the ''at least as effective as '' criterion of section 18(c) of the Act. For this reason, the proposed 29 CFR 1908.1 specifies that the six states and two territories which provide on-site consultation services under the auspices of the OSHA-approved state plan, rather than a cooperative agreement, must provide these services in a manner ''at least as effective as'' the program established under Part 1908. In view of Congress' explicit reference in the CAAA to employee participation during consultation visits, OSHA will expect state plan-based consultation programs to offer comparable notice and participatory opportunities to those afforded under the proposed new Part 1908. Additionally, the proposed revisions to section 1908.1 specify that states providing on-site consultation under their state plan must either adopt the exemption and recognition program outlined in paragraph 1908.7(b)(4) or offer an ''at least as effective'' alternative.

Miscellaneous Editorial Changes

The definition of ''employer'' in 1908.2 is being modified to reflect recent congressional action amending OSH Act coverage to include the U.S. Postal Service. Definitions of various terms used in connection with the proposed program revisions discussed above, such as ''recognition and exemption program,'' ''full service consultation visit,'' and ''list of hazards'' are also proposed, as well as revised definitions of ''serious'' and ''other than serious'' hazards, which are reworded to remove references to OSHA's superseded Field Operations Manual. In section 1908.3, editorial changes have been made to more clearly set forth the existing rule that a state which administers a private-sector consultation program as part of an approved state plan under section 18 of the Act may not additionally administer a consultation program under Part 1908.

III. Preliminary Economic Analysis

The modifications to 29 CFR Part 1908 proposed today will not have any significant measurable economic impact either on employers or state consultation agencies. The OSHA on-site consultation program is entirely voluntary both for employers who seek this free service and for states which provide it. The proposal that consultation visits include an opportunity for employee participation would add slightly to the time spent by state consultants in conducting a visit. OSHA believes, however, that any additional demand on resources would be justified by the benefits of employee participation. A review of our data indicates that in fiscal year 1998, there was some form of employee participation in all consultation visits. Employers allowed participation which included opening and closing conferences, walkaround, and employee interviews, voluntarily. The data also indicates that 100 percent of all visits included employee participation in the walkaround. This new requirement is a codification of what already exists in practice, and will ensure that employees are afforded an opportunity to participate in all aspects of the consultation visit. The cost to employers in continuing to allow such participation is minimal. Employee participation will produce heightened awareness by the workforce and will result in a positive contribution to ensure a safer and healthier workplace. Further, employers receive these consultative services free of charge. Similarly, OSHA believes that the proposed amendment to require employers to post the list of serious hazards and hazards addressed by OSHA rules that are identified by the consultant, the corrective action proposed, and the dates for completion of corrective action will slightly increase the responsibilities of participating employers, but is offset by the value of greater employee participation in the consultation process and enhanced employee awareness. Finally, OSHA's proposal to specifically articulate in Part 1908 the agency's longstanding policy concerning public disclosure of employer-specific consultation information does not appear to impose any economic impact.

In terms of economic impact, the rule proposed today does not constitute a significant regulatory action, within the meaning of Executive Order 12866, because it does not have an annual effect on the economy of $100 million or more; materially affect any sector of the economy; interfere with the programs of other agencies; materially affect the budgetary impact of grant or entitlement programs; nor result in other adverse effects of the kind specified in the Executive Order. However, the rule raises novel legal and policy issues, and has been submitted to OMB for review under Executive Order 12866.

IV. Regulatory Flexibility Act Certification

Pursuant to the Regulatory Flexibility Act (RFA) [(5 U.S.C. 601 *et seq.*)], the Assistant Secretary hereby certifies that the proposed rule will not have a significant economic impact on a substantial number of small entities. The state agencies which have elected to furnish on-site consultation services under cooperative agreements with OSHA are not covered entities under the RFA. Since the consultation program is historically targeted to small, high-hazard workplaces, employers affected by the proposed regulation would tend to include a substantial number of small entities, but, as indicated in the foregoing discussion of regulatory impacts, the proposed rule should have virtually no measurable economic impact on employers.

V. Paperwork Reduction Act

This proposed regulation contains collection of information requirements. These collection of information requirements are identical to the collection of information requirements in the existing consultation agreement regulations, except that OSHA is proposing to add a new requirement for participating employers to post a list of serious hazards identified during the visit, the corrective action proposed by the consultant, and the correction due dates. Under the Paperwork Reduction Act of 1995, all collection of information requirements must be submitted to OMB for approval. The existing collection of information requirements had been approved by OMB under control number 1218–0110. However, these approvals were inadvertently allowed to lapse. Therefore, as a first step in its review of these regulations, OSHA on December 8, 1998 published in the **Federal Register** a request for public comment prior to requesting OMB reinstatement of these approvals [63 FR 67702]. The **Federal Register** notice on information collection for this rule closed without comment. It is currently undergoing review by OMB.

VI. Federalism

The proposed revisions to 29 CFR Part 1908 have been reviewed under Executive Order 12612, Federalism (52 FR 41685; October 30, 1987), which sets forth fundamental federalism principles, federalism policymaking criteria, and provides for consultation by federal agencies with state or local governments

when policies are being formulated which potentially affect them.

Federal OSHA meets regularly with representatives of state-operated on-site consultation programs, both individually and at meetings of OSHCON (the National Association of Occupational Safety and Health Consultation Programs). OSHA additionally has established a Consultation Steering Committee on which both OSHA and the states are represented. OSHA also maintains extensive and frequent communications with its state plan partner agencies, both individual states and through the Occupational Safety and Health State Plan Association (OSHSPA), the association of state plan states. The proposed revisions to Part 1908 have been discussed with all affected states via OSHCON, the Consultation Steering Committee and the OSHSPA, and many state comments are already reflected in the proposal being issued today. The states will, of course, also have an opportunity to submit comments during the 90-day public comment period which opens today.

The revisions to 29 CFR Part 1908 proposed today are generally consistent with the requirements and procedures under which OSHA and the states have administered the consultation program for many years. Two of the procedural requirements which are being strengthened, employee participation rights and mandatory recognition and exemption programs, have been specifically identified by Congress as essential program elements in the recently-enacted Compliance Assistance Authorization Act. The remaining significant revision, which involves the confidentiality of reports and data generated by the consultation program, generally reflects the views historically held by states that this information should be kept confidential. However, the revisions also provide for certain limited use by OSHA of this information, a proposed provision which seeks to balance the states' need to minimize unwarranted disclosure of business information with OSHA's need for the data under certain circumstances. These issues have been extensively discussed with the states. OSHA has reviewed the proposed revisions and finds them to be consistent with the policymaking criteria outlined in Executive Order 12612. It should be noted that cooperative agreements pursuant to section 21 of the OSH Act, and state plans submitted and approved under section 18 of the Act, are entirely voluntary federal programs which do not involve imposition of an intergovernmental mandate [2 U.S.C. 1502, 658(5)].

VII. Public Participation

Interested persons including state consultation agencies, employers and employees who have experience with or an interest in the consultation program are invited to submit written data, views and arguments with respect to the proposed amendments to Part 1908 during a 90-day public comment period. OSHA is interested, among other things, in the experiences of State consultation agencies and other affected parties regarding the following matters:

—How would the requirements for employee participation and notification of hazards affect the willingness of employers to participate in the consultation program?

—What proportion of site visits by federally-funded consultants currently involve some form of employee participation? How many involve complete walkaround participation? What proportion of sites are union and nonunion?

—What types of trade secret or other confidential information are typically included in a consultant's report?

—Are the names of employers who request consultation usually publicly disclosed in your State? How is employer-specific information such as the consultant's report treated under State disclosure laws?

Would employers be less likely to request federally-funded consultation services if participation in this program is not confidential?

Comments must be received on or before _____[date], and must be submitted in quadruplicate to Docket No. _____, Docket Office, Room N–2625, U.S. Department of Labor-OSHA, 200 Constitution Ave., N.W., Washington, DC 20210. Comments under 10 pages long may be sent via telefax to (202) 219–5546 but must be followed by a mailed submission in quadruplicate. Written submissions must clearly identify the issue addressed and the position taken with regard to each issue. All comments submitted to the docket during this proceeding will be open for public inspection and copying at the location specified above. No hearing will be held on this proposal.

VIII. Authority

This document was prepared under the direction of Charles N. Jeffress, Assistant Secretary of Labor for Occupational Safety and Health. It is issued under sections 7(c), 8, and 21(d) of the Occupational Safety and Health Act of 1970 (29 U.S.C. 656, 657, 670) and Secretary of Labor's Order No. 6–96 (62 FR 111, January 2, 1997).

List of Subjects in 29 CFR Part 1908

Confidential business information, Occupational safety and health, Small business.

Signed this 24th day of June, 1999 in Washington, DC.

Charles N. Jeffress,

Assistant Secretary of Labor.

It is proposed to amend 29 CFR part 1908 as set forth below:

PART 1908—CONSULTATION AGREEMENTS

The authority citation for 29 CFR part 1908 would be revised to read as follows:

Authority: Secs. 7(c), 8, 21(d), Occupational Safety and Health Act of 1970 (29 U.S.C. 656, 657, 670) and Secretary of Labor's Order No. 6–96 (62 FR 111 January 2, 1997).

2. Section 1908.1 would be amended by revising paragraphs (a) and (c) to read as follows:

§ 1908.1 Purpose and scope.

(a) This part contains requirements for Cooperative Agreements between States and the Federal Occupational Safety and Health Administration (OSHA) under sections 21(c) of the Occupational Safety and Health Act of 1970 (29 U.S.C. 651 *et seq.*) and section 21(d), the Occupational Safety and Health Administration Compliance Assistance Authorization Act of 1998 (which amends the Occupational Safety and Health Act), under which OSHA will utilize State personnel to provide consultative services to employers. Priority in scheduling such consultation visits shall be assigned to small businesses which are in higher hazard industries or have the most hazardous conditions at issue in the request. Consultation programs operated under the authority of a State plan approved under Section 18 of the Act (and funded under Section 23(g), rather than under a Cooperative Agreement) which provide consultative services to private sector employers, must be ''at least as effective as'' the section 21(d) Cooperative Agreement programs established by this Part. The service will be made available at no cost to employers to assist them in establishing effective occupational safety and health programs for providing employment and places of employment which are safe and healthful. The overall goal is to prevent the occurrence of injuries and illnesses which may result from

exposure to hazardous workplace conditions and from hazardous work practices. The principal assistance will be provided at the employer's worksite, but off-site assistance may also be provided by telephone and correspondence, and at locations other than the employer's worksite, such as the consultation project offices. At the worksite, the consultant will, within the scope of the employer's request, evaluate the employer's program for providing employment and a place of employment which is safe and healthful, as well as identify specific hazards in the workplace, and will provide appropriate advice and assistance in establishing or improving the employer's safety and health program and in correcting any hazardous conditions identified.

* * * * *

(c) States operating approved Plans under section 18 of the Act shall, in accord with section 18(b), establish enforcement policies applicable to the safety and health issues covered by the State Plan which are at least as effective as the enforcement policies established by this part, including a recognition and exemption program.

3. Section 1908.2 would be amended by revising the definitions of ''Employee'', ''Employer'', ''Other-than-serious hazards'', and ''Serious hazard'', and by adding the definitions of ''List of Hazards'', ''Programmed inspection'', ''Programmed inspection schedule'', and ''Recognition and exemption program'' to read as follows:

§ 1908.2 Definitions.

* * * * *

''Employee'' means an employee of an employer who is employed in the business of that employer which affects interstate commerce.

''Employer'' means a person engaged in a business who has employees, but does not include the United States (not including the United States Postal Service), or any State or political subdivision of a State.

* * * * *

''List of Hazards'' means a list of serious hazards and hazards addressed by OSHA rules that are identified by the consultant, the corrective actions proposed by the consultant, and the correction due dates agreed upon by the employer and the consultant. Hazards addressed by OSHA rules shall be included in the list without regard to classification as ''serious'' or ''other-than-serious.'' The List of Hazards will accompany the consultant's written report but is separate from the written report to the employer.

* * * * *

''Other-than-serious hazard'' means any condition or practice which would be classified as an other-than-serious violation of applicable Federal or State statutes, regulations or standards, based on criteria contained in the current OSHA field instructions or approved State Plan counterpart.

''Programmed inspection'' means OSHA worksite inspections which are scheduled based upon objective or neutral criteria. These inspections do not include imminent danger, fatality/catastrophe, and formal complaints.

''Programmed inspection schedule'' means OSHA inspections scheduled in accordance with criteria contained in the current OSHA field instructions or approved State Plan counterpart.

* * * * *

''Recognition and exemption program'' means an achievement recognition program of the OSHA consultation services, which recognizes small employers who operate, at a particular work site, an exemplary program that results in the immediate and long term prevention of job related injuries and illnesses.

''Serious hazard'' means any condition or practice which would be classified as a serious violation of applicable Federal or State statutes, regulations or standards, based on criteria contained in the current OSHA field instructions or approved State Plan counterpart, except that the element of employer knowledge shall not be considered.

* * * * *

4. Section 1908.3 would be amended by revising paragraph (a) to read as follows:

§ 1908.3 Eligibility and funding.

(a) *State eligibility.* Any State may enter into an Agreement with the Assistant Secretary to perform consultation for private sector employers; except that a State having a Plan approved under section 18 of the Act is eligible to participate in the program only if that Plan does not include provisions for federally funded consultation to private sector employers as a part of its plan.

* * * * *

5. Section 1908.5 would be amended by revising paragraphs (a)(3) and (b)(1) to read as follows:

§ 1908.5 Requests and scheduling for onsite consultation.

(a) * * *

(3) *Scope of service.* In its publicity for the program, in response to any inquiry, and before an employer's request for a consultative visit may be accepted, the State shall clearly explain that the service is provided at no cost to an employer with Federal and State funds for the purpose of assisting the employer in establishing and maintaining effective programs for providing safe and healthful places of employment for employees, in accord with the requirements of the applicable State or Federal laws and regulations. The State shall explain that while utilizing this service, an employer remains under a statutory obligation to provide safe and healthful work and working conditions for employees. In addition, while the identification of hazards by a consultant will not mandate the issuance of citations or penalties, the employer is required to take necessary action to eliminate employee exposure to a hazard which in the judgment of the consultant represents an imminent danger to employees and to take action to correct, within a reasonable time, any serious hazards that are identified. The State shall emphasize, however, that the discovery of such a hazard will not initiate any enforcement activity, and that referral will not take place, unless the employer fails to eliminate the identified hazard within the established time frame. The State shall also explain the requirements for participation in the recognition and exemption program as set forth in § 1908.7(b)(4).

(b) *Employer requests.* (1) An on-site consultative visit will be provided only at the request of the employer, and shall not result from the enforcement of any right of entry under State law. When taking a request for assistance, the Project shall explain the employer's obligation to post the List of Hazards accompanying the consultant's written report.

* * * * *

6. Section 1908.6 would be amended by revising paragraphs (b), (c)(2), (d), (e)(7), (e)(8), and (f)(2); by redesignating (g) as (g)(1) and (h) as (h)(1); and by adding new paragraphs (g)(2), and (h)(2) as follows:

§ 1908.6 Conduct of a visit.

(a) * * *

(b) *Structured format.* An initial on-site consultative visit will consist of an opening conference, an examination of those aspects of the employer's safety and health program which relate to the scope of the visit, a walk through of the workplace, and a closing conference. An initial visit may include training and education for employers and employees, if the need for such training and education is revealed by the walk

through of the workplace and the examination of the employer's safety and health program and if the employer so requests. The visit shall be followed by a written report to the employer. Additional visits may be conducted at the employer's request to provide needed education and training, assistance with the employer's safety and health program, or technical assistance in the correction of hazards, or as necessary to verify the correction of serious hazards identified during previous visits. A compliance inspection may, in some cases, be the basis for a visit limited to education and training, assistance with the employer's safety and health program, or technical assistance in the correction of hazards.

(c) * * *

(2)(i) A representative authorized by affected employees shall be afforded an opportunity to accompany the consultant and the employer's representative during the physical inspection of the workplace. Additional employees (such as representatives of a joint safety and health committee, if one exists at the worksite) may be permitted to accompany the consultant during the physical inspection, where the consultant determines that such additional representatives will further aid the visit.

(ii) If there is no authorized representative of employees, or if the consultant is unable with reasonable certainty to determine who is such a representative, the consultant shall confer with a reasonable number of employees concerning matters of occupational safety and health.

(iii) The consultant is authorized to deny the right to accompany under this section to any person whose conduct interferes with the orderly conduct of the visit.

(d) *Opening and closing conferences.* (1) The consultant shall attempt to inform all affected employees of the purpose of the consultation visit, and shall encourage a joint opening conference with employer and employee representatives. If there is an objection to a joint conference, the consultant shall conduct separate conferences with employer and employee representatives.

(2) In addition to the requirements of § 1908.6(c), the consultant shall, in the opening conference, explain to the employer the relationship between on-site consultation and OSHA enforcement activity and shall explain the obligation to protect employees in the event that certain hazardous conditions are identified.

(3) During the opening conference, the consultant shall emphasize the employer's obligation to post the List of Hazards accompanying the consultant's written report as described below in § 1908.6(e)(8).

(4) At the conclusion of the consultation visit, the consultant will conduct a closing conference with employer and employee representatives, jointly or separately. The consultant shall describe hazards identified during the visit, and other pertinent issues related to employee safety and health.

(e) * * *

(7) At the time the consultant determines that a serious hazard exists, the consultant shall assist the employer to develop a specific plan to correct the hazard, affording the employer a reasonable period of time to complete the necessary action. The State shall provide, upon request from the employer within 15 working days of receipt of the consultant's report, an opportunity for an expeditious informal discussion with the consultation manager regarding the period of time established for the correction of a hazard or any other substantive finding of the consultant.

(8) Upon receipt, the employer shall post the List of Hazards accompanying the consultant's written report, and notify affected employees when hazards are corrected. The List of Hazards shall be posted, unedited, in a prominent place where it is readily observable by all affected employees for 3 working days, or until the hazards are corrected, whichever is later. The consultation project shall make available a copy of the List of Hazards to the authorized representative of affected employees.

(f) * * *

(2) An employer must also take the necessary action in accordance with the plan developed under § 1908.6(e)(7) to eliminate or control employee exposure to any identified serious hazard, and meet the posting requirements of § 1908.6(e)(8). In order to demonstrate that the necessary action is being taken, an employer may be required to submit periodic reports, permit a followup visit, or take similar action.

* * * * *

(g) * * *

(2) Because the consultant's written report contains information considered confidential, and because disclosure of such reports would adversely affect the operation of the OSHA consultation program, the consultant's written report shall not be disclosed except to the employer for whom it was prepared and, upon request, to OSHA. OSHA may use information contained in the report in enforcement proceedings which result from an employer's failure to correct hazards identified during a consultation visit under this Part, or which involve misconduct relating to an employer's participation in the consultation program, or other enforcement proceedings to which the information is relevant.

(h) * * *

(2) Disclosure of consultation program information which identifies employers who have requested the services of a consultant would adversely affect the operation of the OSHA consultation program as well as breach the confidentiality of commercial information not customarily disclosed by the employer. Accordingly, such information shall be kept confidential. The State shall provide consultation program information requested by OSHA, including information which identifies employers who have requested consultation services. OSHA may use such information to administer the consultation program and to evaluate state and federal performance under that program, but information which identifies specific employers shall not otherwise be disclosed.

7. Section 1908.7 would be amended by revising paragraphs (a)(3), (b)(1), (b)(4), (b)(5), and (c)(3) to read as follows:

§ 1908.7 Relationship to enforcement.

(a) * * *

(3) The identity of employers requesting on-site consultation, as well as the file of the consultant's visit, shall not be forwarded or provided to OSHA for use in any compliance activity, except as provided for in § 1908.6(f)(1) (failure to eliminate imminent danger), § 1908.6(f)(4) (failure to eliminate serious hazards), § 1908.6(g)(2) (confidentiality of consultant's written report), § 1908.6(h)(2) (confidentiality of employer specific data), and § 1908.7(b)(4) (recognition and exemption program).

(b) *Effect upon scheduling.* (1) An on-site consultative visit already in progress will have priority over OSHA compliance inspections except as provided in § 1908.7(b)(2). The consultant and the employer shall notify the compliance officer of the visit in progress and request delay of the inspection until after the visit is completed. An on-site consultative visit shall be considered ''in progress'' in relation to the working conditions, hazards, or situations covered by the visit from the beginning of the opening conference through the end of the correction due dates and any extensions thereof. OSHA may, in exercising its authority to schedule compliance

inspections, assign a lower priority to worksites where consultation visits are pending.

* * * * *

(4) The recognition and exemption program of the Occupational Safety and Health Administration (OSHA) consultation services provides incentives and support to smaller, high-hazard employers to work with their employees to develop, implement, and continuously improve the effectiveness of their workplace safety and health management system.

(i) *Programmed Inspection Schedule.* (A) When an employer requests participation in a recognition and exemption program, and undergoes a consultative visit covering all conditions and operations in the place of employment related to occupational safety and health; corrects all hazards that were identified during the course of the consultative visit within established time frames; has began to implement all the elements of an effective safety and health program; and agrees to request a consultative visit if major changes in working conditions or work processes occur which may introduce new hazards, OSHA's Programmed Inspections at that particular site may be deferred while the employer is working to achieve recognition and exemption status.

(B) Employers who meet all the requirements for recognition and exemption will have the names of their establishments removed from OSHA's Programmed Inspection Schedule for a period of not less than one year. The exemption period will extend from the date of issuance by the Regional Office of the certificate of recognition.

(ii) *Inspections.* OSHA will continue to make inspections in the following categories at sites that achieved recognition status and have been granted exemption from OSHA's Programmed Inspection Schedule; and at sites granted inspection deferrals as provided for under § 1908.7(b)(4)(i)(A):

(A) Imminent danger.

(B) Fatality/Catastrophe.

(C) Formal Complaints.

(5) When an employer requests consideration for participation in the recognition and exemption program under § 1908.7(b)(4), the provisions of § 1908.6(e)(7), (e)(8), (f)(3), and (f)(5) shall apply to other-than-serious hazards as well as serious hazards.

(c) * * *

(3) In the event of a subsequent inspection, the employer is not required to inform the compliance officer of the prior visit. The employer is not required to provide a copy of the state consultant's written report to the compliance officer, except to the extent that disclosure of information contained in the report is required by 29 CFR 1910.1020 or other applicable OSHA standard or regulation.

* * * * *

[FR Doc. 99–16592 Filed 7–1–99; 8:45 am]

BILLING CODE 4510–26–P

DEPARTMENT OF COMMERCE

National Oceanic and Atmospheric Administration

50 CFR Part 622

[Docket No. 990625173–9173–01; I.D. 033199C]

RIN 0648–AL57

Fisheries of the Caribbean, Gulf of Mexico, and South Atlantic; Reef Fish Fishery of the Gulf of Mexico; Amendment 16B

AGENCY: National Marine Fisheries Service (NMFS), National Oceanic and Atmospheric Administration (NOAA), Commerce.

ACTION: Proposed rule, request for comments.

SUMMARY: NMFS issues this proposed rule to implement Amendment 16B to the Fishery Management Plan for the Reef Fish Resources of the Gulf of Mexico (FMP). This proposed rule would establish size limits for banded rudderfish, lesser amberjack, cubera snapper, dog snapper, mahogany snapper, mutton snapper, schoolmaster, scamp, gray triggerfish, and hogfish; exclude banded rudderfish, lesser amberjack, and hogfish from the 20–fish aggregate (combined) reef fish bag limit; establish new bag limits for hogfish, speckled hind, warsaw grouper, and for banded rudderfish and lesser amberjack combined; and remove queen triggerfish from the listing of Gulf reef fish and from the applicable regulations. The intended effect of this rule is to conserve and manage the reef fish resources of the Gulf of Mexico.

DATES: Written comments must be received on or before August 16, 1999.

ADDRESSES: Comments on the proposed rule must be sent to Dr. Roy E. Crabtree, Southeast Regional Office, NMFS, 9721 Executive Center Drive N., St. Petersburg, FL 33702.

Requests for copies of Amendment 16B, which includes an environmental assessment, and a regulatory impact review (RIR) should be sent to the Gulf of Mexico Fishery Management Council, Suite 1000, 3018 U.S. Highway 301 North, Tampa, FL 33619; Phone: 813–228–2815; Fax: 813-225-7015; E-mail: gulf.council@noaa.gov.

FOR FURTHER INFORMATION CONTACT: Dr. Roy E. Crabtree at 727-570-5305; Fax: 727-570-5583.

SUPPLEMENTARY INFORMATION: The reef fish fishery of the Gulf of Mexico is managed under the FMP. The FMP was prepared by the Gulf of Mexico Fishery Management Council (Council) and is implemented under the authority of the Magnuson-Stevens Fishery Conservation and Management Act (Magnuson-Stevens Act) by regulations at 50 CFR part 622.

Amendment 16B establishes more conservative bag and size limits for several reef fish species and improves consistency with Florida's regulations, thereby improving enforcement.

Measures for Minor Amberjack Species

The word ''minor'' used by the Council in the FMP is not intended to reflect on the significance of these measures but instead to refer to the species banded rudderfish and lesser amberjack. A 1996 NMFS stock assessment suggests that the number of young greater amberjack has decreased steadily since 1991. In addition, anecdotal information from anglers along Florida's Gulf coast suggests that greater amberjack have decreased in size and abundance in recent years. In response to this information, the Council developed Amendment 12 to the FMP that established a 1–fish bag limit for greater amberjack and Amendment 15 to the FMP that established a seasonal closure of the commercial fishery. Under the FMP, greater amberjack are also subject to minimum size limits of 28 inches (71.1 cm) fork length for the recreational fishery and 36 inches (91.4 cm) for the commercial fishery.

Juvenile greater amberjack, lesser amberjack, and banded rudderfish are difficult for the public to distinguish; consequently, misidentified juvenile greater amberjack may be landed as lesser amberjack or banded rudderfish, species that are currently unregulated. Therefore, the Council believes that additional protection for juvenile greater amberjack is warranted. The intent of this rule is to reduce the harvest of misidentified juvenile greater amberjack by limiting the harvest of these minor amberjack species.

The Council proposed in FMP Amendment 12 to apply an aggregate bag limit and a minimum size limit of 28 inches (71.1 cm) to greater amberjack, lesser amberjack, and banded rudderfish. These proposed

measures would have effectively eliminated the recreational harvest of banded rudderfish and lesser amberjack because these species rarely, if ever, reach 28 inches (71.1 cm). Although the Council did not present this aspect of the measures as a deliberate, direct allocation, it would have operated as the functional equivalent of a direct allocation because the effect of the measures would have been to shift the allocation of these species from principally recreational to entirely commercial. NMFS, considering this allocation unfair and inequitable, disapproved this portion of Amendment 12 based on national standard 4 of the Magnuson-Stevens Act, which requires that allocations of fishing privilege be fair and equitable to all fishermen.

Amendment 16B proposes new bag and size limits that should reduce the harvest of banded rudderfish, lesser amberjack, and misidentified greater amberjack while continuing to allow a limited recreational harvest of banded rudderfish and lesser amberjack. The proposed rule would (1) establish a ''slot limit'' of 14 inches (35.6 cm) (minimum) to 22 inches (55.9 cm) (maximum) fork length for the commercial and recreational harvest of banded rudderfish and lesser amberjack and (2) establish a 5–fish aggregate bag limit for banded rudderfish and lesser amberjack and exclude both species from the 20–fish aggregate reef fish bag limit.

Species Not Listed in the Management Unit

Since its inception, the FMP has included two lists of reef fishes: one of species in the management unit and another of species in the fishery but not included in the management unit. The establishment of a list of species in the fishery not to be included in the management unit was originally intended for data collection purposes only; however, the existence of two lists has created confusion regarding which species are subject to the FMP's management measures and implementing regulations. Amendment 16B would eliminate the distinction in the FMP between these two lists and create a single list of ''species in the reef fish FMP,'' which identifies the FMP's reef fish management unit species. Sand perch, dwarf sand perch, queen triggerfish, and hogfish are the only four reef fish species that are currently considered by the FMP to be species in the fishery but not in the management unit. Amendment 16B would include hogfish, dwarf sand perch, and sand perch in the FMP's management unit and remove queen triggerfish from the FMP and from the regulations implementing the FMP. This would allow Florida to regulate vessels registered in the State of Florida and fishing for queen triggerfish in the exclusive economic zone (EEZ) under Florida's more conservative management measures. Although queen triggerfish are found throughout the Gulf of Mexico, they are abundant only off Florida and are seldom landed outside Florida.

Size and Bag Limits Compatible with Florida's Regulations

Florida has established bag and size limits on several reef fish species for which there are either no corresponding limits in the EEZ or the Federal limits differ from the State limits. In response to a request from the Florida Marine Fisheries Commission (Commission) that the Council consider implementing size and bag limits consistent with those in Florida's waters, the Council proposes new consistent bag and size limits. In a November 3, 1994, letter, the Commission provided biological information that formed the basis for its request of Council. Based on the best scientific information available and on the precautionary approach to fisheries management, the Council believes that there is a need for greater protection for these species. The Council concluded that bag and size limits compatible with Florida's would be the most effective means of achieving this greater protection because compatible regulations would facilitate compliance and enforcement. Furthermore, the Council observes that, with the possible exception of gray triggerfish, Florida accounts for most of the recreational and commercial landings of these species. The Council believes that the proposed 12–inch (30.5–cm) minimum size limit for gray triggerfish is needed to respond to increasing effort directed toward the species and to anecdotal information that the stocks off Florida are declining and in need of regulation. The Council's belief is based on information provided by the Florida Marine Fisheries Commission and by a NMFS' assessment prepared for the South Atlantic Fishery Management Council.

The proposed rule would establish the following minimum size limits: Cubera snapper (12 inches (30.5 cm), total length (TL)); dog snapper (12 inches (30.5 cm), TL); mahogany snapper (12 inches (30.5 cm), TL); schoolmaster (12 inches (30.5 cm), TL); mutton snapper (16 inches (40.6 cm), TL); scamp (16 inches (40.6 cm), TL); gray triggerfish (12 inches (30.5 cm), TL); and hogfish (12 inches (30.5 cm), fork length). In addition, the proposed rule would establish a 5–fish bag limit for hogfish, exclude hogfish from the 20–fish aggregate reef fish bag limit, and clarify that sand perch and dwarf sand perch are excluded from the 20–fish aggregate bag limit. Sand perch and dwarf sand perch are often used as bait, and no evidence exists to suggest their stocks are in need of management.

Speckled Hind and Warsaw Grouper

The NMFS Office of Protected Resources has added speckled hind and warsaw grouper to the list of candidates for possible listing as threatened or endangered under the Endangered Species Act. Candidate status does not afford any additional protection for a species, but it does reflect a significant level of concern regarding a species' status. The proposed rule would establish a recreational bag limit of one speckled hind and one warsaw grouper per vessel. These new restrictions also would prohibit the sale of these species by the recreational sector because the FMP and existing regulations prohibit the sale of all reef fish subject to bag limits. The commercial harvest of warsaw grouper and speckled hind would continue and be limited by the deep-water grouper quota. The Council believes that, because warsaw grouper and speckled hind are usually caught in relatively deep water, the mortality rate of released fish is high; consequently, closure of the fishery would provide little additional protection. Furthermore, the Council believes that, because commercial vessels do not target these species and because the Council's intent is to eliminate targeted fishing of these species, additional restrictions on the commercial fishery are not needed.

Additional background and rationale for the measures discussed here are contained in Amendment 16B, the availability of which was announced in the **Federal Register** on April 14, 1999 (64 FR 18395). Written comments on Amendment 16B are solicited and must be received by June 14, 1999. Comments that are received by June 14, 1999, whether specifically directed to the amendment or the proposed rule, will be considered by NMFS in its approval/disapproval decision on Amendment 16B. Comments received after that date will not be considered in the approval/disapproval decision. All comments received on Amendment 16B or on this proposed rule during their respective comment periods will be addressed in the preamble to the final rule.

Classification

At this time, NMFS has not determined that the amendment that this proposed rule would implement is consistent with the national standards of the Magnuson-Stevens Act and other applicable laws. NMFS, in making that determination, will take into account the data, views, and comments received during the comment period on Amendment 16B.

This proposed rule has been determined to be not significant for purposes of E.O. 12866.

The Chief Counsel for Regulation of the Department of Commerce has certified to the Chief Counsel for Advocacy of the Small Business Administration that this proposed rule, if adopted, would not have a significant economic impact on a substantial number of small entities as follows.

The Gulf of Mexico Fishery Management Council (Council) prepared a Regulatory Impact Review (RIR) indicating that the proposed actions in Amendment 16B are not significant under E.O. 12866. The Council also determined, and NMFS concurs, that the proposed actions will not result in a significant impact on a substantial number of small entities. From an overall viewpoint, the RIR indicates that the measures will result in short-term commercial revenue losses that are minor but only partially quantified. The entities that will be affected by the proposed regulations consist of about 1,500 commercial reef fish vessels with permits and about 900 for-hire (charterboat and headboat) vessels with permits. All of these firms qualify as small business entities according to the Small Business Administration definitions. Because of the large number of species involved in the proposed regulations, it is clear that over 20 percent of the small entities engaged in commercial and for-hire businesses that have a dependency on the reef fish fishery will be impacted to some degree by the regulations in aggregate. However, the degree of impact will be small as is shown in the following discussion.

The annual aggregate reef fish gross revenues produced by the commercial harvesters is about $45 million. Although there is no definitive information available regarding the gross revenues generated by the for-hire businesses, an estimate can be obtained by assuming that these 900 businesses conduct an average of about 250 trips per year at an average cost to the customers of about $500 per trip. These estimates are considered to be reasonable, and if so, the aggregate annual gross revenues for the for-hire businesses would exceed $100 million. In any event, the size of gross revenue generated by the for-hire businesses is comparable to revenues generated by the commercial harvesters.

It is proposed that a slot size limit of 14 inches minimum and 22 inches maximum be set for banded rudderfish and lesser amberjack. This slot limit would likely reduce the annual level of commercial catches because a small portion of the historical catch is known to exceed 22 inches. Although the exact amount of the reduction cannot be estimated due to a lack of data, it is known that the total annual commercial revenue for the two species combined is about $62,000. Hence, even if these species were totally excluded from the commercial catch, and they will not be, the maximum effect would be a reduction in reef fish revenues of about one tenth of one percent.

The for-hire fishery also lands banded rudderfish and lesser amberjack, but data regarding the poundage involved are not conclusive. For example, the 1993 data indicate that up to 200,000 pounds may have been landed by the for-hire sector, but data for 1995 and 1996 indicate that current landings are less than 10,000 pounds per year. This may be explainable since the various amberjack species are very similar and the early data may include a large poundage of misidentified juvenile greater amberjack. Assuming that the more recent data are the most reliable because greater efforts toward species identification have been made recently, then the potential impacts on the for hire fishery are very small. Further, available data indicate that most of the for-hire catch currently falls within the proposed slot limit. Hence, available information indicates only a very small, but not fully quantified, effect on the for-hire sector. A 5–fish recreational bag limit is proposed for banded rudderfish and lesser amberjack. Recreational catch data collected since 1993 indicate that catches of banded rudderfish or lesser amberjack have never exceeded 3 fish per trip. Hence, the economic impact on the for-hire businesses is expected to be negligible.

The proposal to establish minimum size limits for cubera snapper, dog snapper, mahogany snapper, mutton snapper, schoolmaster, scamp, gray triggerfish and hogfish are proposed in order to bring Federal rules into compliance with size rules established by the state of Florida where most of the catch of these species occurs. With an exception in the case of scamp, these species are rarely caught in Federal waters. The proposed minimum size for scamp is 16 inches and because most of the catch of scamp in Federal waters consists of fish over 16 inches, the impact is expected to be very small. Another proposal will establish a 5–fish recreational bag limit for hogfish. The bulk of the recreational take of hogfish is by private recreational fishermen using spearguns; the for-hire industry accounts for only 1–3 percent of the total catch. Further, the catch of hogfish by any individual angler on a for-hire trip rarely exceeds five fish. Hence, the economic impact is expected to be negligible.

There is also a provision for a 1–fish bag limit for speckled hind and warsaw grouper. These species are thought to be highly overfished, and the current recreational catch of these two species is very small. The bag limits are proposed just as a precautionary measure in the event any particular angler might encounter an extraordinary assemblage of either species and the impact, if any, will be very small.

The provision to exclude banded rudderfish, lesser amberjack and hogfish from an existing 20–fish bag limit for species not otherwise regulated by a bag limit is being done for administrative purposes because these species will come under bag limits established by other proposals already discussed. Hence, this particular proposal has no impact.

The provision to remove queen triggerfish from the Reef Fish Fishery Management Plan is being suggested because the species is considered to be an ornamental species that is not normally targeted by commercial or recreational fishermen in Federal waters. The effect of the proposed regulation is to allow the state of Florida, which has jurisdiction for ornamental species, to enforce their existing laws with respect to catches that may occur in Federal waters. In any event, this species is rarely taken in Federal waters, and the expected economic impact is near zero.

The foregoing discussion establishes that the expected economic impacts of the proposed measures is very minor in the individual sense and in the aggregate. Hence, it is clear that there will not be a significant economic impact on a substantial number of small business entities engaged in the commercial harvesting of reef fish nor on the for-hire industry entities that depend on reef fish species for their livelihood.

As a result, a regulatory flexibility analysis was not prepared.

List of Subjects in 50 CFR Part 622

Fisheries, Fishing, Puerto Rico, Reporting and recordkeeping requirements, Virgin Islands.

Dated: June 28, 1999.

Andrew A. Rosenberg,

Deputy Assistant Administrator for Fisheries, National Marine Fisheries Service.

For the reasons set out in the preamble, 50 CFR part 622 is proposed to be amended as follows:

PART 622—FISHERIES OF THE CARIBBEAN, GULF, AND SOUTH ATLANTIC

1. The authority citation for part 622 continues to read as follows:

Authority: 16 U.S.C. 1801 *et seq.*

2. In § 622.34, the last sentence in paragraph (g)(1) is revised to read as follows:

§ 622.34 Gulf EEZ seasonal and/or area closures.

* * * * *

(g) * * *

(1) * * * The provisions of this paragraph do not apply to the following species: dwarf sand perch, hogfish, and sand perch.

* * * * *

3. In § 622.37, the section heading, introductory text, and paragraph (d) are revised to read as follows:

§ 622.37 Size limits.

All size limits in this section are minimum size limits unless specified otherwise. Except for undersized king and Spanish mackerel allowed in paragraphs (c)(2) and (c)(3) of this section, a fish not in compliance with its size limit, as specified in this section, in or from the Caribbean, Gulf, South Atlantic, and/or Mid-Atlantic EEZ, as appropriate, may not be possessed, sold, or purchased. A fish not in compliance with its size limit must be released immediately with a minimum of harm. The operator of a vessel that fishes in the EEZ is responsible for ensuring that fish on board are in compliance with the size limits specified in this section.

* * * * *

(d) *Gulf reef fish*—(1) *Snapper*. (i) Lane snapper—8 inches (20.3 cm), TL.

(ii) Vermilion snapper—10 inches (25.4 cm), TL.

(iii) Cubera, dog, gray, mahogany, and yellowtail snappers and schoolmaster—12 inches (30.5 cm), TL.

(iv) Red snapper—15 inches (38.1 cm), TL.

(v) Mutton snapper—16 inches (40.6 cm), TL.

(2) *Grouper*. (i) Scamp—16 inches (40.6 cm), TL.

(ii) Black, red, and yellowfin groupers and gag—20 inches, (50.8 cm), TL.

(3) *Other Gulf reef fish species*. (i) Gray triggerfish—12 inches (30.5 cm), TL.

(ii) Hogfish—12 inches (30.5 cm), fork length.

(iii) Banded rudderfish and lesser amberjack—14 inches (35.6 cm), fork length (minimum size); 22 inches (55.9 cm), fork length (maximum size).

(iv) Greater amberjack—28 inches (71.1 cm), fork length, for a fish taken by a person subject to the bag limit specified in § 622.39(b)(1)(i); and 36 inches (91.4 cm), fork length, for a fish taken by a person not subject to the bag limit.

* * * * *

4. In § 622.39, the second and third sentences of paragraph (a)(1), and paragraphs (b)(1)(ii), (b)(1)(v), and (b)(2) are revised; and paragraphs (b)(1)(vii) and (b)(1)(viii) are added to read as follows:

§ 622.39 Bag and possession limits.

(a) * * *

(1) * * * Unless specified otherwise, bag limits apply to a person on a daily basis, regardless of the number of trips in a day. Unless specified otherwise, possession limits apply to a person on a trip after the first 24 hours of that trip. * * *

* * * * *

(b) * * *

(1) * * *

(ii) Groupers, combined, excluding jewfish and Nassau grouper—5 per person per day, but not to exceed 1 speckled hind and 1 Warsaw grouper per vessel per day.

* * * * *

(v) Gulf reef fish, combined, excluding those specified in paragraphs (b)(1)(i) through (b)(1)(iv) and paragraphs (b)(1)(vi) through (b)(1)(viii) of this section and excluding dwarf sand perch and sand perch—20.

* * * * *

(vii) Banded rudderfish and lesser amberjack, combined—5.

(viii) Hogfish—5.

(2) *Possession limits*. A person, or a vessel in the case of speckled hind or Warsaw grouper, on a trip that spans more than 24 hours may possess no more than two daily bag limits, provided such trip is on a vessel that is operating as a charter vessel or headboat, the vessel has two licensed operators aboard, and each passenger is issued and has in possession a receipt issued on behalf of the vessel that verifies the length of the trip.

* * * * *

Table 3 of Appendix A to Part 622 [Amended]

5. In Table 3 of Appendix A to Part 622, the entry, ''Queen triggerfish, *Balistes vetula*'', is removed.

[FR Doc. 99–16916 Filed 7–1–99; 8:45 am]

BILLING CODE 3510–22–F

DEPARTMENT OF COMMERCE

National Oceanic and Atmospheric Administration

50 CFR Part 648

[I.D. 062199A]

New England Fishery Management Council; Public Meeting

AGENCY: National Marine Fisheries Service (NMFS), National Oceanic and Atmospheric Administration (NOAA), Commerce.

ACTION: Public meeting.

SUMMARY: The New England Fishery Management Council (Council) will hold a 3-day public meeting on July 13-15, 1999, to consider actions affecting New England fisheries in the exclusive economic zone (EEZ).

DATES: The meeting will be held on Tuesday, July 13, 1999, at 9:30 a.m. and on Wednesday and Thursday, July 14-15, 1999, at 9 a.m.

ADDRESSES: The meeting will be held at the Holiday Inn by the Bay, 88 Spring Street, Portland, ME 04101; telephone (207) 775-2331. Requests for special accommodations should be addressed to the New England Fishery Management Council, 5 Broadway, Saugus, MA 01906-1036; telephone: (781) 231-0422.

FOR FURTHER INFORMATION CONTACT: Paul J. Howard, Executive Director, New England Fishery Management Council (781) 231-0422.

SUPPLEMENTARY INFORMATION:

Tuesday, July 13, 1999

At the start of the meeting the Council Chairman and Executive Director will ask The Council for approval to form a Research Steering and Experimental Fisheries Committee. This group would identify and prioritize fishery management research needs in the Northeast region, including the one-percent TAC set-aside earmarked for sea scallop fishery research. A presentation of the Interspecies Committee Report will follow and will review discussions about: Managing fishing harvest capacity, including NMFS initiatives; strawman proposals for controlling latent effort; possible changes to the fishing year for Council fishery management plans; and outstanding issues for small vessel upgrading provisions. The morning session will conclude with a presentation of the annual Stock Assessment and Fishery Evaluation Report for the herring fishery.

In the afternoon, the Council will discuss Atlantic herring management and will consider the following actions: Approval of specifications for the 2000 fishing year, approval of an adjustment to the U.S. at-sea processing specification for the 1999 fishing year, and approval to develop a framework adjustment to the proposed Herring Fishery Management Plan (FMP) for the 2000 fishing year. The framework adjustment would change the FMP to include a possible adjustment to the timing of the fishing year, changes to reporting requirements for large domestic at-sea processing vessels, a modification to allow the specification of U.S. at-sea processing allocation by management area, and possible changes to other measures contained in the FMP. The Council will also discuss and may approve a control date for the herring fishery and development of a controlled access system.

Wednesday, July 14, 1999

The Council will continue to discuss herring agenda items until noon. An update on whiting management will

follow. This update will include review, and possible approval, of written comments concerning NMFS' proposed disapproval of the limited access program submitted in Amendment 12 to the Northeast Multispecies FMP (whiting management program). The Council will also consider the following actions relating to small-mesh fisheries: Development of a New England Council Small Mesh Species FMP to include the management of whiting, red hake, and offshore hake; inclusion of a proposed whiting framework adjustment to modify the mesh size/possession limit program and to allow the use of net strengtheners in this FMP; and inclusion of northern shrimp management in the EEZ in the Small Mesh Species FMP. The Council will conclude the July 14 meeting with the Habitat Committee Report. The committee chairman will discuss the committee's recommendations concerning the designation of additional habitat areas of particular concern, measures to protect essential fish habitat (EFH), and modifications to existing EFH designations.

Thursday, July 15, 1999

The meeting will begin with reports from the Council Chairman; Executive Director; the Administrator, Northeast Region, NMFS; Northeast Fisheries Science Center and Mid-Atlantic Fishery Management Council liaisons; and representatives of the U.S. Coast Guard, the Atlantic States Marine Fisheries Commission, and the U.S. Fish and Wildlife Service. Next, the Groundfish Committee will review the development of Framework Adjustment 31 to the Northeast Multispecies FMP. Although the Council will not take final action on the framework adjustment, they will discuss incorporating the Framework 31 proposals into the annual adjustment to the Northeast Multispecies FMP, an action that would not be formally considered by the Council until late fall 1999. The measures proposed for Framework 31 would have replaced the Georges Bank cod trip limit that would take effect on August 15 under Framework Adjustment 30 once it is implemented. Measures in Framework 31 would require vessels fishing in the Gulf of Maine (GOM) Trip Limit Exemption Program to stop fishing for a 30-day block of time each quarter, reduce the amount of gear fished by hook and gillnet vessels, and eliminate the ''running clock'' feature of the GOM cod trip limit. The ''running clock'' is a mechanism in the regulations that was developed to reduce discards by allowing vessels to land their GOM cod trip limit overages. Under the running clock provision, vessels with landings that exceed the trip limit must remain at the dock until the days-at-sea for that trip equate to the amount of cod landed. The Council will also consider development of a framework adjustment to the Northeast Multispecies FMP that would implement mid-season changes to the GOM cod fishery management program. Formal action on this issue would be scheduled for the August and September 1999 Council meetings.

During the afternoon portion of the meeting, the Mid-Atlantic Plans Committee will ask the Council to consider forwarding written comments to the Mid-Atlantic Fishery Management Council on the following issues: Proposals for the Tilefish FMP, mackerel fishery limited entry measures, coordinating the Atlantic Herring and Mackerel FMPs, and the status of the summer flounder rebuilding program. The Enforcement Committee will review progress on the development of enforcement guidelines for Council use during the development of management measures. The meeting will adjourn after the Council addresses any outstanding business.

Although other issues not contained in the agenda may come before the Council, the Council may not take final action on them without public notice or within 14 days prior to the meeting date, unless the purpose of taking final action on an issue not contained in the agenda is to address an emergency under section 305(c) of the Magnuson-Stevens Fishery Conservation and Management Act. In that case, public notice will be deemed to have been met by announcing the emergency action to the public in attendance at the Council meeting.

Special Accommodations

This meeting is accessible to people with physical disabilities. Requests for sign language interpretation or other auxiliary aids should be directed to Paul J. Howard (see **ADDRESSES**) at least 5 days prior to the meeting date.

Dated: June 29, 1999.

George H. Darcy,

Acting Director, Office of Sustainable Fisheries, National Marine Fisheries Service.

[FR Doc. 99–16915 Filed 7–1–99; 8:45 am]

BILLING CODE 3510–22–F

Notices

Federal Register
Vol. 64, No. 127
Friday, July 2, 1999

This section of the FEDERAL REGISTER contains documents other than rules or proposed rules that are applicable to the public. Notices of hearings and investigations, committee meetings, agency decisions and rulings, delegations of authority, filing of petitions and applications and agency statements of organization and functions are examples of documents appearing in this section.

DEPARTMENT OF AGRICULTURE

Forest Service

Lake Tahoe Basin Federal Advisory Committee

AGENCY: Forest Service, USDA.

ACTION: Notice of meeting.

SUMMARY: The Lake Tahoe Basin Federal Advisory Committee will hold a meeting on July 30, 1999, at the City of South Lake Tahoe Chamber Office, 1900 Lake Tahoe Blvd., South Lake Tahoe, CA. This Committee, established by the Secretary of Agriculture on December 15, 1998, (64 FR 2876) is chartered to provide advice to the Secretary on implementing the terms of the Federal Interagency Partnership on the Lake Tahoe Region and other matters raised by the Secretary.

DATES: The meeting will be held July 30, 1999, beginning at 9 a.m. and ending at 4:30 p.m.

ADDRESSES: The meeting will be held at the City of South Lake Tahoe Chamber Office, 1900 Lake Tahoe Blvd., South Lake Tahoe, CA.

FOR FURTHER INFORMATION CONTACT: Juan Palma or Jeannie Stafford, Lake Tahoe Basin Management Unit, Forest Service, 870 Emerald Bay Road Suite 1, South Lake Tahoe, CA 96250, (530) 573–2642.

SUPPLEMENTARY INFORMATION: The committee will meet jointly with the Lake Tahoe Basin Executives Committees. Items to be covered on the agenda include: [1] Subcommittee Reports; [2] Agency Briefing; [3] 20th Member Proposal; [4] Washoe Tribal Access; [5] 1–800 Cleanup Proposal; [6] Legislative Update; [7] Future Agenda Development; [8] Open Public Comment; and [9] Strategic Planning. All Lake Tahoe Basin Federal Advisory Committee meetings are open to the public. Interested citizens are encouraged to attend. Issues may be brought to the attention of the Committee during the open public comment period at the meeting or by filing written statements with the secretary for the Committee before or after the meeting. Please refer any written comments to the Lake Tahoe Basin Management Unit at the contact address stated above.

Dated: June 18, 1999.

Bradley E. Powell,

Acting Regional Forester.

[FR Doc. 99–16840 Filed 7–1–99; 8:45 am]

BILLING CODE 3410–11–M

DEPARTMENT OF AGRICULTURE

Rural Housing Service

Notice of Request for Extension of an Approved Information Collection

AGENCY: Rural Housing Service, USDA.

ACTION: Proposed collection; Comments requested.

SUMMARY: In accordance with the Paperwork Reduction Act of 1995, this notice announces the Rural Housing Service's intention to request an extension for a currently approved information collection in support of the program for 7 CFR part 3550, Direct Single Family Housing Loans and Grants and its accompanying Handbooks.

DATES: Comments on this notice must be received by August 31, 1999 to be assured of consideration.

FOR FURTHER INFORMATION CONTACT: David J. Villano, Deputy Administrator, Single Family Housing, Rural Housing Service, 1400 Independence Avenue, SW, Mail Stop 0780, Washington, D.C. 20250–0780, telephone number (202) 720–5177.

SUPPLEMENTARY INFORMATION:

Title: Direct Single Family Housing Loans and Grants.

OMB Numbers: 0575–0166 and 0575–0172 (the Agency seeks to consolidate both packages into one information collection package).

Expiration Date of Approval: August 31, 1999.

Type of Request: Extension of a currently approved information collection.

Abstract: The Rural Housing Service (RHS), through its direct single family housing loan and grant programs, provides financial assistance to construct, improve, alter, repair, replace or rehabilitate dwellings, which will provide modest, decent, safe and sanitary housing to eligible individuals in rural areas. To assist a customer, they must provide the Agency with a standard housing application (used by government and private lenders), and provide documentation to support same. Documentation includes verification of income, financial information on assets and liabilities, etc. The information requested is comparable to that required by any private mortgage lender. To assist individuals in obtaining affordable housing, a borrower's house payment may be subsidized to an interest rate as low as 1%. The amount of subsidy is based upon the customer's household income. After receipt of this information, if the customer obtains a loan from RHS, they must update income information on an annual basis to renew the payment subsidy. The aforementioned information required by RHS is vital to be able to process applications for RHS assistance and make prudent loan underwriting and program decisions. It includes borrower financial information such as household income, assets and liabilities and monthly expenses. Without this information, the Agency is unable to determine if a customer would qualify for any services or if assistance has been granted to which the customer would not be eligible under current regulations and statutes. The Agency also encourages its customers to leverage our mortgage financing with that of other lenders to assist as many customers as possible within our limited resources. In many cases, another lender will leverage and participate with RHS in assisting the customer. In these cases, RHS and the other lender share documentation, with the customer's consent, to reduce duplication. Through our work with participating lenders, the Agency keeps abreast of information required by other lenders to ensure that RHS is not requiring unnecessary information. The Agency continually strives to ensure that information collection burden is kept to a minimum.

As mentioned, these loans are made directly by the Agency. RHS also services these loans for their term (33 or 38 years) and provides tools to assist the customer in becoming a successful homeowner. As discussed, payment subsidies are renewed on an annual basis. In addition, the Agency provides

credit counseling and other services to its customers in an effort to assist them in becoming successful. The Agency offers many servicing tools including a moratorium (stop) on payments, modifications to payments subsidies to reflect changes in the customer's income, loan reamortization, payment workouts, etc. To obtain this assistance, the Agency must require certain information such as updated income and financial information, etc., to ensure the customer qualifies for the assistance, and is provided with the correct benefits based upon their circumstances.

Direct single family housing loans are only provided to customers who cannot obtain other credit for their housing needs. Customers are required by statute to refinance with another lender when they are financially able. To ensure the Agency meets its statutory responsibilities, existing customers may be requested to submit update income and financial information for the Agency to make a determination as to whether they can ''graduate'' to other credit. In addition, should a customer default on a loan which results in liquidation, the Agency needs updated income and financial information to settle any outstanding indebtedness.

The subject regulations and accompanying handbooks were completely reinvented and reengineered in 1996. Significant reductions in information collection requirements were made at that time. Since program funding has increased for these programs since that time and the Agency leverages loans with other lenders, meaning that more customers are affected by these information collection requirements, the Agency does not propose a reduction in burden.

Estimate of Burden: Public burden for this collection of information is estimated to range from 5 minutes to 3 hours per response.

Respondents: Applicants seeking direct single family housing loans and grants from the Agency and approximately 600,000 existing customers who have active loans and grants under the Section 502 and 504 programs.

Estimated Number of Respondents: 823,370.

Estimated Number of Responses per Respondent: 4.

Estimated Total Annual Burden on Respondents: 1,052,129 hours.

Copies of this information collection can be obtained from Tracy Gillin, Regulations and Paperwork Management Branch, at (202) 692–0039.

Comments

Comments are invited on: (a) Whether the proposed collection of information is necessary for the proper performance of the functions of the Agency, including whether the information will have practical utility; (b) the accuracy of the Agency's estimate of the burden of the proposed collection of information including the validity of the methodology and assumptions used; (c) ways to enhance the quality, utility and clarity of the information to be collected; and d) ways to minimize the burden of the collection of information on those who are to respond, including through the use of appropriate automated, electronic, mechanical, or other technological collection techniques or other forms of information technology. Comments may be sent to Tracy Gillin, Regulations and Paperwork Management Branch, US Department of Agriculture, Rural Development, STOP 0742, 1400 Independence Ave. SW, Washington, DC 20250. All responses to this notice will be summarized and included in the request for OMB approval. All comments will also become a matter of public record.

Dated: June 24, 1999.

Eileen M. Fitzgerald,

Acting Administrator, Rural Housing Service.

[FR Doc. 99–16845 Filed 7–1–99; 8:45 am]

BILLING CODE 3410–XV–U

COMMITTEE FOR PURCHASE FROM PEOPLE WHO ARE BLIND OR SEVERELY DISABLED

Procurement List; Proposed Additions and Deletion

AGENCY: Committee for Purchase From People Who Are Blind or Severely Disabled.

ACTION: Proposed additions to and deletion from procurement list.

SUMMARY: The Committee has received proposals to add to the Procurement List services to be furnished by nonprofit agencies employing persons who are blind or have other severe disabilities, and to delete a commodity previously furnished by such agencies.

COMMENTS MUST BE RECEIVED ON OR BEFORE: August 2, 1999.

ADDRESSES: Committee for Purchase From People Who Are Blind or Severely Disabled, Crystal Gateway 3, Suite 310, 1215 Jefferson Davis Highway, Arlington, Virginia 22202–4302.

FOR FURTHER INFORMATION CONTACT: Beverly Milkman (703) 603–7740.

SUPPLEMENTARY INFORMATION: This notice is published pursuant to 41 U.S.C. 47(a)(2) and 41 CFR 51–2.3. Its purpose is to provide interested persons an opportunity to submit comments on the possible impact of the proposed actions.

Additions

If the Committee approves the proposed additions, all entities of the Federal Government (except as otherwise indicated) will be required to procure the services listed below from nonprofit agencies employing persons who are blind or have other severe disabilities.

I certify that the following action will not have a significant impact on a substantial number of small entities. The major factors considered for this certification were:

1. The action will not result in any additional reporting, recordkeeping or other compliance requirements for small entities other than the small organizations that will furnish the services to the Government.

2. The action will result in authorizing small entities to furnish the services to the Government.

3. There are no known regulatory alternatives which would accomplish the objectives of the Javits-Wagner-O'Day Act (41 U.S.C. 46–48c) in connection with the services proposed for addition to the Procurement List. Comments on this certification are invited. Commenters should identify the statement(s) underlying the certification on which they are providing additional information.

The following services have been proposed for addition to the Procurement List for production by the nonprofit agencies listed:

Cutting and Assembly of FTESFB System for F–15

1560–01–458–2610 (#3B Fuel Tank)
1560–01–458–2593 (#2 Fuel Tank)
1560–01–458–6193 (Left Auxiliary Fuel Tank)
Robins Air Force Base, Georgia
NPA: Middle Georgia Easter Seal Society, Inc., Dublin, Georgia

Janitorial/Custodial

Agriculture Cotton Annex
14th and Independence Avenue, SW
Washington, DC
NPA: Melwood Horticultural Training Center, Upper Marlboro, Maryland

Janitorial/Custodial

Herbert Hoover Building and White House Visitor's Center
14th & Constitution Avenue, N.W.
Washington, DC
NPA: Melwood Horticultural Training Center, Upper Marlboro, Maryland

Janitorial/Custodial

Naval War College
Newport, Rhode Island
NPA: Newport County Chapter of Retarded Citizens, Inc., Middletown, Rhode Island

Recycling Service

March Air Reserve Base, California
NPA: Valley Resource Center for the Retarded, Inc., Perris, California

Deletion

I certify that the following action will not have a significant impact on a substantial number of small entities. The major factors considered for this certification were:

1. The action will not result in any additional reporting, recordkeeping or other compliance requirements for small entities.
2. The action will result in authorizing small entities to furnish the commodity to the Government.
3. There are no known regulatory alternatives which would accomplish the objectives of the Javits-Wagner-O'Day Act (41 U.S.C. 46—48c) in connection with the commodity proposed for deletion from the Procurement List.

The following commodity has been proposed for deletion from the Procurement List:

Pillowcase—Disposable
6532–01–125–3269

Beverly L. Milkman,

Executive Director.

[FR Doc. 99–16919 Filed 7–1–99; 8:45 am]

BILLING CODE 6353–01–P

COMMITTEE FOR PURCHASE FROM PEOPLE WHO ARE BLIND OR SEVERELY DISABLED

Procurement List; Additions

AGENCY: Committee for Purchase From People Who Are Blind or Severely Disabled.

ACTION: Additions to the Procurement List.

SUMMARY: This action adds to the Procurement List services to be furnished by nonprofit agencies employing persons who are blind or have other severe disabilities.

EFFECTIVE DATE: August 2, 1999.

ADDRESS: Committee for Purchase From People Who Are Blind or Severely Disabled, Crystal Gateway 3, Suite 310, 1215 Jefferson Davis Highway, Arlington, Virginia 22202–4302.

FOR FURTHER INFORMATION CONTACT: Beverly Milkman (703) 603–7740.

SUPPLEMENTARY INFORMATION: On May 14 and 21, 1999, the Committee for Purchase From People Who Are Blind or Severely Disabled published notices (64 F.R. 26360 and 27752) of proposed additions to the Procurement List.

After consideration of the material presented to it concerning capability of qualified nonprofit agencies to provide the services and impact of the additions on the current or most recent contractors, the Committee has determined that the services listed below are suitable for procurement by the Federal Government under 41 U.S.C. 46–48c and 41 CFR 51–2.4.

I certify that the following action will not have a significant impact on a substantial number of small entities. The major factors considered for this certification were:

1. The action will not result in any additional reporting, recordkeeping or other compliance requirements for small entities other than the small organizations that will furnish the services to the Government.
2. The action will not have a severe economic impact on current contractors for the services.
3. The action will result in authorizing small entities to furnish the services to the Government.
4. There are no known regulatory alternatives which would accomplish the objectives of the Javits-Wagner-O'Day Act (41 U.S.C. 46—48c) in connection with the services proposed for addition to the Procurement List.

Accordingly, the following services are hereby added to the Procurement List:

Administrative Services

Air Force Personnel Center
Randolph Air Force Base, Texas

Janitorial/Custodial

U.S. Army Reserve Center
Lincoln, Rhode Island

Janitorial/Custodial

Naval and Marine Corps Readiness Reserve Center
Providence, Rhode Island

This action does not affect current contracts awarded prior to the effective date of this addition or options that may be exercised under those contracts.

Beverly L. Milkman,

Executive Director.

[FR Doc. 99–16920 Filed 7–1–99; 8:45 am]

BILLING CODE 6353–01–P

CENSUS MONITORING BOARD

Meeting

June 28, 1999.

AGENCY: Census Monitoring Board.

ACTION: Notice of closed meeting.

SUMMARY: This notice, in compliance with Pub. L. 105–119, sets forth the meeting date, time, and place for a closed meeting of the U.S. Census Monitoring Board. The meeting agenda will include a review of the paid advertising campaign Young & Rubicam Advertising has been contracted to produce on behalf of the U.S. Census Bureau. Unfortunately, due to space limitations, it is not possible to open this meeting to the public. The meeting will, however, remain ''on the record'' and a transcript of the proceedings will be produced and made available to the public upon request.

DATE: Thursday, July 8, 1999.

TIME: 11:00 a.m. to 3:00 p.m.

LOCATION: 285 Madison Avenue, New York City, New York.

FOR FURTHER INFORMATION CONTACT: Contact Estela Mendoza, Communications Director (Presidential Members), U.S. Census Monitoring Board, Phone (301) 457–9903, or Clark Reid, Communications Director (Congressional Members), U.S. Census Monitoring Board, Phone (301) 457–5088.

Mark R. Johnson,

Executive Director, Presidential Members.

[FR Doc. 99–16750 Filed 7–2–99; 8:45 am]

BILLING CODE 3510–07–M

COMMISSION ON CIVIL RIGHTS

Sunshine Act Meeting

AGENCY: U.S. Commission on Civil Rights.

DATE AND TIME: Friday, July 9, 1999, 9:30 a.m.

PLACE: U.S. Commission on Civil Rights, 624 Ninth Street, N.W., Room 540, Washington, DC 20425.

STATUS:

Agenda

I. Approval of Agenda
II. Approval of Minutes of June 18, 1999 Meeting
IV. Staff Director's Report
V. Racial and Ethnic Tensions in American Communities: Poverty, Inequality, and Discrimination—The New York Report
VI. The Health Care Challenge: Acknowledging Disparity: Confronting Discrimination, and Ensuring Equality
  Part I: The Role of Government and Private Health Care Programs and Initiatives
  Part II: The Role of Federal Civil Rights Enforcement Efforts
VII. FY 2001 OMB Estimate
VIII. State Advisory Reports
- Race Relations in Springfield (Missouri)
- Equal Housing Opportunities in New York: An Evaluation of Section 8 Housing Programs in Buffalo, Rochester, and Syracuse (New York)

IX. Future Agenda Items

CONTACT PERSON FOR FURTHER INFORMATION: David Aronson, Press and Communications (202) 376–8312.

Stephanie Y. Moore,

General Counsel.

[FR Doc. 99–17046 Filed 6–30–99; 3:03 pm]

BILLING CODE 6335–0–M

DEPARTMENT OF COMMERCE

Submission for OMB Review; Comment Request

The Department of Commerce (DoC) has submitted to the Office of Management and Budget (OMB) for clearance the following proposal for collection of information under the provisions of the Paperwork Reduction Act (44 U.S.C. Chapter 35).

Agency: Patent and Trademark Office (PTO).

Title: Customer Input—Patent and Trademark Customer Surveys.

Form Numbers: Form numbers will be determined as applicable for the various surveys.

Agency Approval Number: 0651–0038.

Type of Request: Revision of a currently approved collection.

Burden: 2,349 hours per year.

Number of Respondents: 7,200 responses per year.

Avg. Hours Per Response: The PTO estimates that it will take approximately 15 minutes to complete the telephone surveys and face-to-face interviews, 30 minutes to complete mail surveys, five minutes to complete the questionnaires and comment cards, and 120 minutes to participate in a focus group.

Needs and Uses: The public uses the various types of surveys to express their opinions about the services and information products offered by the PTO and about the quality of the customer service that they received from the PTO. Additionally, these various surveys allow the public to offer their suggestions and comments concerning the PTO, its services, the information products, and customer service. Depending on the type of survey, the public can provide their comments on the spot to the interviewer or complete the survey at their own pace and mail their responses back to the PTO. The PTO uses the data collected from these surveys for strategic planning, allocation of resources, the establishment of performance goals, and the verification and establishment of service standards. The PTO also uses this data to assess customer satisfaction with PTO products and surveys, assess customer priorities in service characteristics, and identify areas where service levels differ from customer expectations.

Affected Public: Individuals or households, businesses or other for-profit, not-for-profit institutions, and farms.

Frequency: On occasion.

Respondent's Obligation: Voluntary.

OMB Desk Officer: Peter Weiss, (202) 395–3630.

Copies of the above information collection proposal can be obtained by calling or writing Linda Engelmeier, Departmental Forms Clearance Officer, (202) 482–3272, Department of Commerce, Room 5033, 14th and Constitution Avenue, NW, Washington, DC 20230.

Written comments and recommendations for the proposed information collection should be sent within 30 days of publication to Peter Weiss, OMB Desk Officer, Room 10236, New Executive Office Building, 725 17th Street, N.W., Washington, D.C. 20503.

Dated: June 29, 1999.

Linda Engelmeier,

Departmental Forms Clearance Officer, Office of the Chief Information Officer.

[FR Doc. 99–16923 Filed 7–1–99; 8:45 am]

BILLING CODE 3510–16–P

COMMITTEE FOR THE IMPLEMENTATION OF TEXTILE AGREEMENTS

Adjustment of Import Limits for Certain Cotton, Wool, Man-Made Fiber, Silk Blend and Other Vegetable Fiber Textiles and Textile Products Produced or Manufactured in the People's Republic of China

June 23, 1999.

AGENCY: Committee for the Implementation of Textile Agreements (CITA).

ACTION: Issuing a directive to the Commissioner of Customs adjusting limits.

EFFECTIVE DATE: July 2, 1999.

FOR FURTHER INFORMATION CONTACT: Janet Heinzen, International Trade Specialist, Office of Textiles and Apparel, U.S. Department of Commerce, (202) 482–4212. For information on the quota status of these limits, refer to the Quota Status Reports posted on the bulletin boards of each Customs port, call (202) 927–5850, or refer to the U.S. Customs website at http://www.customs.ustreas.gov. For information on embargoes and quota re-openings, call (202) 482–3715.

SUPPLEMENTARY INFORMATION:

Authority: Section 204 of the Agricultural Act of 1956, as amended (7 U.S.C. 1854); Executive Order 11651 of March 3, 1972, as amended.

The current limits for certain categories are being adjusted for swing.

A description of the textile and apparel categories in terms of HTS numbers is available in the CORRELATION: Textile and Apparel Categories with the Harmonized Tariff Schedule of the United States (see **Federal Register** notice 63 FR 71096, published on December 23, 1998). Also see 63 FR 67046, published on December 4, 1998.

Troy H. Cribb,

Chairman, Committee for the Implementation of Textile Agreements.

Committee for the Implementation of Textile Agreements

June 23, 1999.

Commissioner of Customs,

Department of the Treasury, Washington, DC 20229.

Dear Commissioner: This directive amends, but does not cancel, the directive issued to you on November 30, 1998, by the Chairman, Committee for the Implementation of Textile Agreements. That directive concerns imports of certain cotton, wool, man-made fiber, silk blend and other vegetable fiber textiles and textile products, produced or manufactured in China and exported during the twelve-month period which began on January 1, 1999 and extends through December 31, 1999.

Effective on July 2, 1999, you are directed to adjust the limits for the following categories, as provided for under the terms of the current bilateral textile agreement between the Governments of the United States and the People's Republic of China:

Category	Adjusted twelve-month limit [1]
Group I 200, 218, 219, 226, 237, 239, 300/301, 313–315, 317/326, 331, 333–336, 338/339, 340–342, 345, 347/348, 350–352, 359–C [2], 359–V [3], 360–363, 369–D [4], 369–H [5], 369–L [6], 410, 433-436, 438, 440, 442–444, 445/446, 447, 448, 607, 611, 613–615, 617, 631, 633–636, 638/639, 640–643, 644/844, 645/646, 647–652, 659–C [7], 659–H [8], 659–S [9], 666, 669–P [10], 670–L [11], 831, 833, 835, 836, 840, 842 and 845–847, as a group.	1,455,227,908 square meters equivalent.

Category	Adjusted twelve-month limit [1]
Sublevels in Group I	
200	753,436 kilograms.
218	11,944,011 square meters.
219	2,550,017 square meters.
226	11,578,933 square meters.
237	2,122,147 dozen.
239	3,232,383 kilograms.
300/301	2,402,082 kilograms.
313	44,287,403 square meters.
314	52,147,131 square meters.
317/326	22,652,850 square meters of which not more than 4,333,936 square meters shall be in Category 326.
331	5,498,352 dozen pairs.
333	104,087 dozen.
334	342,090 dozen.
335	407,714 dozen.
336	182,441 dozen.
338/339	2,450,643 dozen of which not more than 1,807,420 dozen shall be in Categories 338–S/339–S [12].
340	816,967 dozen of which not more than 416,495 dozen shall be in Category 340–Z [13].
341	721,781 dozen of which not more than 433,069 dozen shall be in Category 341–Y [14].
342	282,728 dozen.
345	135,484 dozen.
347/348	2,393,604 dozen.
350	172,191 dozen.
351	576,595 dozen.
352	1,693,329 dozen.
359–C	640,870 kilograms.
359–V	935,546 kilograms.
360	8,233,769 numbers of which not more than 5,616,225 numbers shall be in Category 360–P [15].
361	4,433,134 numbers.
362	7,465,447 numbers.
363	22,699,660 numbers.
369–D	4,933,438 kilograms.
369–H	5,284,190 kilograms.
369–L	3,523,365 kilograms.
410	1,048,999 square meters of which not more than 840,887 square meters shall be in Category 410–A [16] and not more than 832,958 square meters shall be in Category 410–B [17].
433	21,808 dozen.
434	13,999 dozen.
435	25,711 dozen.
436	15,840 dozen.
438	27,719 dozen.
440	39,601 dozen of which not more than 22,629 dozen shall be in Category 440–M [18].
442	41,920 dozen.
443	133,699 numbers.
444	217,262 numbers.
445/446	300,646 dozen.
447	72,040 dozen.
448	23,391 dozen.
607	3,435,763 kilograms.
611	5,696,514 square meters.
613	8,060,561 square meters.
614	12,666,594 square meters.
615	26,369,548 square meters.
617	18,424,137 square meters.
631	1,379,439 dozen pairs.
633	60,801 dozen.
634	661,475 dozen.
635	697,741 dozen.
636	580,143 dozen.
638/639	2,507,047 dozen.
640	1,414,506 dozen.
641	1,379,161 dozen.
642	354,435 dozen.
643	543,366 numbers.
644/844	3,851,093 numbers.
645/646	866,332 dozen.
647	1,602,696 dozen.
648	1,178,453 dozen.
649	984,561 dozen.
650	123,381 dozen.
651	801,368 dozen of which not more than 144,468 dozen shall be in Category 651–B [19].
652	2,941,091 dozen.
659–C	434,423 kilograms.
659–H	3,012,129 kilograms.
659–S	637,864 kilograms.
666	3,729,042 kilograms of which not more than 1,351,367 kilograms shall be in Category 666–C [20].
669–P	2,141,706 kilograms.
670–L	16,955,799 kilograms.
831	596,267 dozen pair.
833	30,659 dozen.
835	129,761 dozen.
836	295,767 dozen.
840	497,932 dozen.
842	285,011 dozen.
846	188,062 dozen.
847	1,322,643 dozen.
Group II	
330, 332, 349, 353, 354, 359–O [21], 431, 432, 439, 459, 630, 632, 653, 654 and 659–O [22], as a group.	131,042,606 square meters equivalent.
Group III	
201, 220, 222, 223, 224–V [23], 224–O [24], 225, 227, 229, 369–O [25], 400, 414, 464, 465, 469, 600, 603, 604–O [26], 606, 618–622, 624–629, 665, 669–O [27] and 670–O [28], as a group.	271,827,808 square meters equivalent.
Sublevels in Group III	
224–V	3,836,642 square meters.
225	6,618,938 square meters.
Group IV	
832, 834, 838, 839, 843, 850–852, 858 and 859, as a group.	12,291,027 square meters equivalent.

[1] The limits have not been adjusted to account for any imports exported after December 31, 1998.

[2] Category 359–C: only HTS numbers 6103.42.2025, 6103.49.8034, 6104.62.1020, 6104.69.8010, 6114.20.0048, 6114.20.0052, 6203.42.2010, 6203.42.2090, 6204.62.2010, 6211.32.0010, 6211.32.0025 and 6211.42.0010.

[3] Category 359–V: only HTS numbers 6103.19.2030, 6103.19.9030, 6104.12.0040, 6104.19.8040, 6110.20.1022, 6110.20.1024, 6110.20.2030, 6110.20.2035, 6110.90.9044, 6110.90.9046, 6201.92.2010, 6202.92.2020, 6203.19.1030, 6203.19.9030, 6204.12.0040, 6204.19.8040, 6211.32.0070 and 6211.42.0070.

[4] Category 369–D: only HTS numbers 6302.60.0010, 6302.91.0005 and 6302.91.0045.

[5] Category 369–H: only HTS numbers 4202.22.4020, 4202.22.4500 and 4202.22.8030.

[6] Category 369–L: only HTS numbers 4202.12.4000, 4202.12.8020, 4202.12.8060, 4202.92.1500, 4202.92.3016, 4202.92.6091 and 6307.90.9905.

[7] Category 659–C: only HTS numbers 6103.23.0055, 6103.43.2020, 6103.43.2025, 6103.49.2000, 6103.49.8038, 6104.63.1020, 6104.63.1030, 6104.69.1000, 6104.69.8014, 6114.30.3044, 6114.30.3054, 6203.43.2010, 6203.43.2090, 6203.49.1010, 6203.49.1090, 6204.63.1510, 6204.69.1010, 6210.10.9010, 6211.33.0010, 6211.33.0017 and 6211.43.0010.

[8] Category 659–H: only HTS numbers 6502.00.9030, 6504.00.9015, 6504.00.9060, 6505.90.5090, 6505.90.6090, 6505.90.7090 and 6505.90.8090.

[9] Category 659–S: only HTS numbers 6112.31.0010, 6112.31.0020, 6112.41.0010, 6112.41.0020, 6112.41.0030, 6112.41.0040, 6211.11.1010, 6211.11.1020, 6211.12.1010 and 6211.12.1020.

[10] Category 669–P: only HTS numbers 6305.32.0010, 6305.32.0020, 6305.33.0010, 6305.33.0020 and 6305.39.0000.

[11] Category 670–L: only HTS numbers 4202.12.8030, 4202.12.8070, 4202.92.3020, 4202.92.3031, 4202.92.9026 and 6307.90.9907.

[12] Category 338–S: all HTS numbers except 6109.10.0012, 6109.10.0014, 6109.10.0018 and 6109.10.0023; Category 339–S: all HTS numbers except 6109.10.0040, 6109.10.0045, 6109.10.0060 and 6109.10.0065.

[13] Category 340–Z: only HTS numbers 6205.20.2015, 6205.20.2020, 6205.20.2050 and 6205.20.2060.

[14] Category 341–Y: only HTS numbers 6204.22.3060, 6206.30.3010, 6206.30.3030 and 6211.42.0054.

[15] Category 360–P: only HTS numbers 6302.21.3010, 6302.21.5010, 6302.21.7010, 6302.21.9010, 6302.31.3010, 6302.31.5010, 6302.31.7010 and 6302.31.9010.

[16] Category 410–A: only HTS numbers 5111.11.3000, 5111.11.7030, 5111.11.7060, 5111.19.2000, 5111.19.6020, 5111.19.6040, 5111.19.6060, 5111.19.6080, 5111.20.9000, 5111.30.9000, 5111.90.3000, 5111.90.9000, 5212.11.1010, 5212.12.1010, 5212.13.1010, 5212.14.1010, 5212.15.1010, 5212.21.1010, 5212.22.1010, 5212.23.1010, 5212.24.1010, 5212.25.1010, 5311.00.2000, 5407.91.0510, 5407.92.0510, 5407.93.0510, 5407.94.0510, 5408.31.0510, 5408.32.0510, 5408.33.0510, 5408.34.0510, 5515.13.0510, 5515.22.0510, 5515.92.0510, 5516.31.0510, 5516.32.0510, 5516.33.0510, 5516.34.0510 and 6301.20.0020.

[17] Category 410–B: only HTS numbers 5007.10.6030, 5007.90.6030, 5112.11.2030, 5112.11.2060, 5112.19.9010, 5112.19.9020, 5112.19.9030, 5112.19.9040, 5112.19.9050, 5112.19.9060, 5112.20.3000, 5112.30.3000, 5112.90.3000, 5112.90.9010, 5112.90.9090, 5212.11.1020, 5212.12.1020, 5212.13.1020, 5212.14.1020, 5212.15.1020, 5212.21.1020, 5212.22.1020, 5212.23.1020, 5212.24.1020, 5212.25.1020, 5309.21.2000, 5309.29.2000, 5407.91.0520, 5407.92.0520, 5407.93.0520, 5407.94.0520, 5408.31.0520, 5408.32.0520, 5408.33.0520, 5408.34.0520, 5515.13.0520, 5515.22.0520, 5515.92.0520, 5516.31.0520, 5516.32.0520, 5516.33.0520 and 5516.34.0520.

[18] Category 440–M: Only HTS numbers 6203.21.0030, 6203.23.0030, 6205.10.1000, 6205.10.2010, 6205.10.2020, 6205.30.1510, 6205.30.1520, 6205.90.3020, 6205.90.4020 and 6211.31.0030.

[19] Category 651–B: only HTS numbers 6107.22.0015 and 6108.32.0015.

[20] Category 666–C: only HTS number 6303.92.2000.

[21] Category 359–O: all HTS numbers except 6103.42.2025, 6103.49.8034, 6104.62.1020, 6104.69.8010, 6114.20.0048, 6114.20.0052, 6203.42.2010, 6203.42.2090, 6204.62.2010, 6211.32.0010, 6211.32.0025, 6211.42.0010 (Category 359–C); 6103.19.2030, 6103.19.9030, 6104.12.0040, 6104.19.8040, 6110.20.1022, 6110.20.1024, 6110.20.2030, 6110.20.2035, 6110.90.9044, 6110.90.9046, 6201.92.2010, 6202.92.2020, 6203.19.1030, 6203.19.9030, 6204.12.0040, 6204.19.8040, 6211.32.0070 and 6211.42.0070 (Category 359–V).

[22] Category 659–O: all HTS numbers except 6103.23.0055, 6103.43.2020, 6103.43.2025, 6103.49.2000, 6103.49.8038, 6104.63.1020, 6104.63.1030, 6104.69.1000, 6104.69.8014, 6114.30.3044, 6114.30.3054, 6203.43.2010, 6203.43.2090, 6203.49.1010, 6203.49.1090, 6204.63.1510, 6204.69.1010, 6210.10.9010, 6211.33.0010, 6211.33.0017, 6211.43.0010 (Category 659–C); 6502.00.9030, 6504.00.9015, 6504.00.9060, 6505.90.5090, 6505.90.6090, 6505.90.7090, 6505.90.8090 (Category 659–H); 6112.31.0010, 6112.31.0020, 6112.41.0010, 6112.41.0020, 6112.41.0030, 6112.41.0040, 6211.11.1010, 6211.11.1020, 6211.12.1010 and 6211.12.1020 (Category 659–S).

[23] Category 224–V: only HTS numbers 5801.21.0000, 5801.23.0000, 5801.24.0000, 5801.25.0010, 5801.25.0020, 5801.26.0010, 5801.26.0020, 5801.31.0000, 5801.33.0000, 5801.34.0000, 5801.35.0010, 5801.35.0020, 5801.36.0010 and 5801.36.0020.

[24] Category 224–O: all HTS numbers except 5801.21.0000, 5801.23.0000, 5801.24.0000, 5801.25.0010, 5801.25.0020, 5801.26.0010, 5801.26.0020, 5801.31.0000, 5801.33.0000, 5801.34.0000, 5801.35.0010, 5801.35.0020, 5801.36.0010 and 5801.36.0020 (Category 224–V).

[25] Category 369–O: all HTS numbers except 6302.60.0010, 6302.91.0005 and 6302.91.0045 (Category 369–D); 4202.22.4020, 4202.22.4500, 4202.22.8030 (Category 369–H); 4202.12.4000, 4202.12.8020, 4202.12.8060, 4202.92.1500, 4202.92.3016, 4202.92.6091 and 6307.90.9905 (Category 369–L); and 6307.10.2005 (Category 369–S)

[26] Category 604–O: all HTS numbers except 5509.32.0000 (Category 604–A).

[27] Category 669–O: all HTS numbers except 6305.32.0010, 6305.32.0020, 6305.33.0010, 6305.33.0020 and 6305.39.0000 (Category 669–P).

[28] Category 670–O: only HTS numbers 4202.22.4030, 4202.22.8050 and 4202.32.9550.

The Committee for the Implementation of Textile Agreements has determined that these actions fall within the foreign affairs exception to the rulemaking provisions of 5 U.S.C. 553(a)(1).

Sincerely,

Troy H. Cribb,

Chairman, Committee for the Implementation of Textile Agreements.

[FR Doc. 99–16922 Filed 7–1–99; 8:45 am]

BILLING CODE 3510–DR–F

COMMITTEE FOR THE IMPLEMENTATION OF TEXTILE AGREEMENTS

Adjustment of Import Limits for Certain Cotton, Wool, Man-Made Fiber, Silk Blend and Other Vegetable Fiber Textiles and Textile Products Produced or Manufactured in Indonesia

June 21, 1999.

AGENCY: Committee for the Implementation of Textile Agreements (CITA).

ACTION: Issuing a directive to the Commissioner of Customs adjusting limits.

EFFECTIVE DATE: July 2, 1999.

FOR FURTHER INFORMATION CONTACT: Janet Heinzen, International Trade Specialist, Office of Textiles and Apparel, U.S. Department of Commerce, (202) 482–4212. For information on the quota status of these limits, refer to the Quota Status Reports posted on the bulletin boards of each Customs port, call (202) 927–5850, or refer to the U.S. Customs website at http://www.customs.ustreas.gov. For information on embargoes and quota re-openings, call (202) 482–3715.

SUPPLEMENTARY INFORMATION:

Authority: Section 204 of the Agricultural Act of 1956, as amended (7 U.S.C. 1854); Executive Order 11651 of March 3, 1972, as amended.

The current limits for certain categories are being adjusted, variously, for swing, carryover, carryforward and carryforward used.

A description of the textile and apparel categories in terms of HTS numbers is available in the CORRELATION: Textile and Apparel Categories with the Harmonized Tariff Schedule of the United States (see **Federal Register** notice 63 FR 71096, published on December 23, 1998). Also see 63 FR 69055, published on December 15, 1998.

Troy H. Cribb,

Chairman, Committee for the Implementation of Textile Agreements.

Committee for the Implementation of Textile Agreements

June 21, 1999.

Commissioner of Customs,
Department of the Treasury, Washington, DC 20229.

Dear Commissioner: This directive amends, but does not cancel, the directive issued to you on December 8, 1998, by the Chairman, Committee for the Implementation of Textile Agreements. That directive concerns imports of certain cotton, wool, man–made fiber, silk blend and other vegetable fiber textiles and textile products, produced or manufactured in Indonesia and exported during the twelve-month period which began on January 1, 1999 and extends through December 31, 1999.

Effective on July 2, 1999, you are directed to adjust the limits for the categories listed below, as provided for under the Uruguay Round Agreement on Textiles and Clothing:

Category	Adjusted twelve-month limit [1]
Levels in Group I	
219	10,146,499 square meters.
313–O [2]	16,406,636 square meters.
314–O [3]	58,723,731 square meters.
317–O [4]/617/326–O[5]	25,280,247 square meters of which not more than 4,167,829 square meters shall be in Category 326–O.
331/631	2,771,548 dozen pairs.
336/636	705,970 dozen.
338/339	1,300,780 dozen.
342/642	465,681 dozen.
345	465,839 dozen.
347/348	1,953,149 dozen.
359–S/659–S [6]	1,419,336 kilograms.
360	1,587,570 numbers.
361	1,587,570 numbers.
369–S [7]	1,041,484 kilograms.
433	12,141 dozen.
445/446	64,353 dozen.
448	23,653 dozen.
613/614/615	23,756,916 square meters.
618–O [8]	1,672,217 square meters.
625/626/627/628/629–O [9].	26,387,397 square meters.
638/639	1,666,025 dozen.
645/646	735,322 dozen.
647/648	3,871,257 dozen.
.	
Group II	
201, 218, 220, 222–224, 226, 227, 237, 239pt. [10], 332, 333, 352, 359–O [11], 362, 363, 369–O [12], 400, 410, 414, 431, 434, 435, 436, 438, 440, 442, 444, 459pt. [13], 464, 469pt. [14], 603, 604–O [15], 606, 607, 621, 622, 624, 633, 649, 652, 659–O [16], 666, 669–O [17], 670–O [18], 831, 833–836, 838, 840, 842–846, 850–852, 858 and 859pt. [19], as a group.	111,553,181 square meters equivalent.

[1] The limits have not been adjusted to account for any imports exported after December 31, 1998.

[2] Category 313–O: all HTS numbers except 5208.52.3035, 5208.52.4035 and 5209.51.6032.

[3] Category 314–O: all HTS numbers except 5209.51.6015.

[4] Category 317–O: all HTS numbers except 5208.59.2085.

[5] Category 326–O: all HTS numbers except 5208.59.2015, 5209.59.0015 and 5211.59.0015.

[6] Category 359–S: only HTS numbers 6112.39.0010, 6112.49.0010, 6211.11.8010, 6211.11.8020, 6211.12.8010 and 6211.12.8020; Category 659–S: only HTS numbers 6112.31.0010, 6112.31.0020, 6112.41.0010, 6112.41.0020, 6112.41.0030, 6112.41.0040, 6211.11.1010, 6211.11.1020, 6211.12.1010 and 6211.12.1020.

[7] Category 369–S: only HTS number 6307.10.2005.

[8] Category 618–O: all HTS numbers except 5408.24.9010 and 5408.24.9040.

[9] Category 625/626/627/628; Category 629–O: all HTS numbers except 5408.34.9085 and 5516.24.0085.

[10] Category 239pt.: only HTS number 6209.20.5040 (diapers).

[11] Category 359–O: all HTS numbers except 6103.42.2025, 6103.49.8034, 6104.62.1020, 6104.69.8010, 6114.20.0048, 6114.20.0052, 6203.42.2010, 6203.42.2090, 6204.62.2010, 6211.32.0010, 6211.32.0025, 6211.42.0010 (Category 359–C); 6112.39.0010, 6112.49.0010, 6211.11.8010, 6211.11.8020, 6211.12.8010, 6211.12.8020 (Category 359–S); and 6406.99.1550 (Category 359pt.).

[12] Category 369–O: all HTS numbers except 6307.10.2005 (Category 369–S); 5601.10.1000, 5601.21.0090, 5701.90.1020, 5701.90.2020, 5702.10.9020, 5702.39.2010, 5702.49.1020, 5702.49.1080, 5702.59.1000, 5702.99.1010, 5702.99.1090, 5705.00.2020 and 6406.10.7700 (Category 369pt.).

[13] Category 459pt.: all HTS numbers except 6405.20.6030, 6405.20.6060, 6405.20.6090, 6406.99.1505 and 6406.99.1560.

[14] Category 469pt.: all HTS numbers except 5601.29.0020, 5603.94.1010 and 6406.10.9020.

[15] Category 604–O: all HTS numbers except 5509.32.0000 (Category 604–A).

[16] Category 659–O: all HTS numbers except 6103.23.0055, 6103.43.2020, 6103.43.2025, 6103.49.2000, 6103.49.8038, 6104.63.1020, 6104.63.1030, 6104.69.1000, 6104.69.8014, 6114.30.3044, 6114.30.3054, 6203.43.2010, 6203.43.2090, 6203.49.1010, 6203.49.1090, 6204.63.1510, 6204.69.1010, 6210.10.9010, 6211.33.0010, 6211.33.0017, 6211.43.0010 (Category 659–C); 6112.31.0010, 6112.31.0020, 6112.41.0010, 6112.41.0020, 6112.41.0030, 6112.41.0040, 6211.11.1010, 6211.11.1020, 6211.12.1010 and 6211.12.1020 (Category 659–S); 6406.99.1510 and 6406.99.1540 (Category 659pt.).

[17] Category 669–O: all HTS numbers except 6305.32.0010, 6305.32.0020, 6305.33.0010, 6305.33.0020 and 6305.39.0000 (Category 669–P); 5601.10.2000, 5601.22.0090, 5607.49.3000, 5607.50.4000, 6406.10.9040 (Category 669pt.).

[18] Category 670–O: all HTS numbers except 4202.12.8030, 4202.12.8070, 4202.92.3020, 4202.92.3031, 4202.92.9026 and 6307.90.9907 (Category 670–L).

[19] Category 859pt.: only HTS numbers 6115.19.8040, 6117.10.6020, 6212.10.5030, 6212.10.9040, 6212.20.0030, 6212.30.0030, 6212.90.0090, 6214.10.2000 and 6214.90.0090.

The Committee for the Implementation of Textile Agreements has determined that these actions fall within the foreign affairs exception to the rulemaking provisions of 5 U.S.C. 553(a)(1).

Sincerely,

Troy H. Cribb,

Chairman, Committee for the Implementation of Textile Agreements.

[FR Doc. 99–16921 Filed 7–1–99; 8:45 am]

BILLING CODE 3510–DR–F

COMMODITY FUTURES TRADING COMMISSION

Global Markets Advisory Committee Meeting

This is to give notice, pursuant to Section 10(a) of the Federal Advisory Committee Act, 5 U.S.C. App. 2, § 10(a), that the Commodity Futures Trading Commission's Global Markets Advisory Committee (''GMAC'') will conduct a public meeting on July 21, 1999, in the first floor hearing room (Room 1000) of the Commission's Washington, D.C. headquarters, Three Lafayette Centre, 1155 21st Street, NW, Washington, DC 20581. The meeting will begin at 2:00 p.m. and last until 5:00 p.m. The agenda will consist of the following:

Agenda

1. Introductory Remarks by Commissioner Barbara Pedersen Holum, Chairman, GMAC.
2. Presentation and discussion of a report of the Ad Hoc Subcommittee on Regulatory Parity.
3. Presentation and discussion of a report of the GMAC Subcommittee on Cross-Border Business Impediments.
4. International Organization of Securities Commission update.
5. New business.

The GMAC was created by the Commodity Futures Trading Commission for the purpose of receiving advice and recommendations on the many complex and novel issues raised by the ever-increasing globalization of futures markets. The purposes and objectives of the GMAC are more fully set forth in its charter.

The meeting is open to the public. The Chairman of the GMAC, Commissioner Barbara Pedersen Holum, is empowered to conduct the meeting in a fashion that will, in her judgment, facilitate the orderly conduct of business. Any member of the public who wishes to file a written statement with the Advisory Committee should mail a copy of the statement to the attention of: The Global Markets Advisory Committee, c/o Commissioner Barbara Pedersen Holum, Commodity Futures Trading Commission, Three Lafayette Centre, 1155 21st Street, NW, Washington, DC 20581, before the meeting. Members of the public who wish to make oral statements should also inform Commissioner Holum in writing at the foregoing address at least three business days before the meeting. Reasonable provision will be made, if time permits, for an oral presentation of no more than five minutes each in duration.

Issued by the Commission in Washington, DC on June 28, 1999.

Jean A. Webb,

Secretary of the Commission.

[FR Doc. 99–16854 Filed 7–1–99; 8:45 am]

BILLING CODE 6351–01–M

DEPARTMENT OF DEFENSE

Office of the Secretary

Proposed Collection; Comment Request

AGENCY: Office of the Under Secretary of Defense (Personnel and Readiness).

ACTION: Notice.

SUMMARY: In compliance with Section 3506(c)(2)(A) of the Paperwork Reduction Act of 1995, the Office of the Under Secretary of Defense (Personnel and Readiness) announces the following proposed reinstatement of a public information collection and seeks public comment on the provisions thereof. Comments are invited on: (a) whether the proposed collection of information is necessary for the proper performance of the functions of the agency, including whether the information shall have practical utility; (b) the accuracy of the agency's estimate of burden of the proposed information collection; (c) ways to enhance the quality, utility, and clarity of the information to be collected; and (d) ways to minimize the burden of the information collection on respondents, including through the use of automated collection techniques or other forms of information technology.

DATES: Consideration will be given to all comments received by August 31, 1999.

ADDRESSES: Written comments and recommendations on the proposed information collection should be sent to the Office of the Under Secretary of Defense (Personnel and Readiness) (Force Management Policy) (Personnel Support, Families and Education) Office of Family Policy, ATTN: Rebecca Posante, 4015 Wilson Blvd., Arlington, Virginia 22203.

FOR FURTHER INFORMATION CONTACT: To request more information on this proposed information collection or to obtain a copy of the proposal and associated collection instruments,

please write to the above address or call Rebecca Posante at (703) 696–1702 ext 115.

Title, Applicable Form, and OMB Control Number: Exceptional Family Member Program Medical and Educational Summary Form; DD Form 2792, OMB Control Number 0704-[To be determined].

Needs and Uses: This information collection requirement is necessary to screen members of military families to determine if they have special medical or educational conditions so that these conditions can be taken into consideration when the service member is being assigned to a new location with his/her family. The information is used by the personnel system to identify special considerations necessary for future assignments. The DD Form 2792, Exceptional Family Member Program Medical and Educational Summary, associatd with this information collection, will also be used by civilian personnel offices to identify family members of civilian employees who have special needs in order to advise the civilian employee of the availability of services in the location where they will be potentially employed. Local and state school personnel will complete the educational portion of DD Form 2792 for children requiring special educational services.

Affected Public: Individuals or households; State, local or tribal government.

Annual Burden Hours: 3,188.

Number of Respondents: 12,757.

Responses per Respondent: 1.

Average Burden per Response: 15 minutes.

Frequency: tri-annually.

SUPPLEMENTARY INFORMATION:

Summary of Information Collection

The Military Departments of the Department of Defense screen all family members prior to a service member and Federal employee being assigned to an overseas location and to some assignments in the United States. DD Form 2792, Exceptional Family Member Program Medical and Educational Summary Form, will be completed for family members who have been identified with a special medical or educational need to document the medical or educational needs and service requirements. Their needs will be matched to the resources available at the overseas location to determine the feasibility of receiving appropriate services in that location. The information is used by the Military Service's personnel offices for purposes of assignment only. DD Form 2792 will also be completed for family members of civilian employees to document their special health or educational needs in order to advise the civilian employee of the availability of the needed services.

Dated: June 28, 1999.

Patricia L. Toppings,

Alternate OSD Federal Register Liaison Officer, Department of Defense.

[FR Doc. 99–16839 Filed 7–1–99; 8:45 am]

BILLING CODE 5001–10–M

DEPARTMENT OF EDUCATION

[CFDA No.: 84.330]

Office of Elementary and Secondary Education—Advanced Placement Incentive Program

AGENCY: Department of Education.

ACTION: Notice inviting applications for new awards for fiscal year (FY) 1999.

SUMMARY: The Secretary invites applications for new awards for FY 1999 under the Advanced Placement Incentive Program and announces the deadline date for the transmittal of applications for funding under the program. This is a discretionary grant program.

Purpose of Program: One purpose of the Advanced Placement Incentive Program is to enable States to reimburse part or all of the cost of advanced placement test fees for eligible low-income individuals. In addition, a State educational agency (SEA) in a State in which no eligible low-income individual is required to pay more than a nominal fee to take advanced placement tests in core subjects may use grant funds for activities directly related to increasing (a) the enrollment of low-income individuals in advanced placement courses; (b) the participation of low-income individuals in advanced placement tests; and (c) the availability of advanced placement courses in schools serving high-poverty areas. This program is authorized under title VIII, part B, of the Higher Education Amendments of 1998 (1998 Amendments) (20 U.S.C. 1070a–11, note).

SUPPLEMENTARY INFORMATION: In the March 11, 1999 **Federal Register** (64 FR 12154), the Secretary published a notice inviting applications for new awards for FY 1999 under the Advanced Placement Incentive Program. Under that competition, which closed on April 26, 1999, the Secretary has awarded approximately $2.8 million in grants of a total FY 1999 appropriation of $4 million for this program. In order to provide more States that are eligible for funds under section 810(d) of the 1998 Amendments (20 U.S.C. 1070a–11(d), note) an opportunity to apply, the Secretary hereby announces a supplemental FY 1999 grant competition for new awards under the Advanced Placement Incentive Program to carry out activities directly related to increasing (a) the enrollment of low-income individuals in advanced placement courses; (b) the participation of low-income individuals in advanced placement tests; and (c) the availability of advanced placement courses in schools serving high-poverty areas. The Secretary also announces the deadline date for the transmittal of applications under this supplemental competition.

Who May Apply: SEAs in any State; including the District of Columbia, the Commonwealth of Puerto Rico, the Virgin Islands, Guam, American Samoa, the Northern Mariana Islands, the Republic of the Marshall Islands, the Federated States of Micronesia, and the Republic of Palau; in which no eligible low-income individual is required to pay more than a nominal fee to take advanced placement tests in core subjects. SEAs receiving grants under the competition that closed on April 26, 1999, may apply for additional funds under this supplemental competition, provided that they meet the eligibility criteria described above.

Deadline for Transmittal of Applications: August 16, 1999.

Deadline for Intergovernmental Review: September 15, 1999.

Applications Available: July 2, 1999.

Available Funds: $1,200,000.

Estimated Range of Awards: $50,000 to $1,200,000.

Estimated Average Size of Awards: $120,000.

Estimated Number of Awards: 10.

Note: These estimates are projections for the guidance of potential applicants. The Department is not bound by any estimates in this notice.

Project Period: Up to 12 months.

Requirements for Approval of Applications

In order to receive funding under this supplemental competition, an SEA must submit to the Department an application that contains the following:

(a) A description of the advanced placement test fees the State will pay on behalf of individual students;

(b) A description of the State's plan to disseminate information on the availability of test fee payments to eligible individuals through secondary school teachers and guidance counselors;

(c) The number of children in the State who were eligible to be counted

under section 1124(c) of title I, part A of the Elementary and Secondary Education Act of 1965 (ESEA), as amended (20 U.S.C. 6333(c)), during the preceding State fiscal year;

(d) A description of the State's plan to evaluate the effectiveness of the program;

(e) An assurance that funds provided under this program will be used to supplement, and not supplant, other Federal, State, local, or private funds available to assist low-income individuals in paying for advanced placement testing;

(f) An assurance that no eligible low-income individual in the State will be required to pay more than a nominal fee to take advanced placement tests in core subjects; and

(g) A narrative that addresses the selection criteria described below.

Selection Criteria

The Secretary will use the following selection criteria to evaluate applications for funding under this supplemental competition. These criteria are taken from the Education Department General Administrative Regulations, as codified at 34 CFR 75.210. The maximum total score for all of the selection criteria is 100 points. The maximum score for each criterion is as follows:

(a) *Need for project*—10 points.

(b) *Significance*—5 points.

(c) *Quality of project design*—25 points.

(d) *Quality of project services*—25 points.

(e) *Quality of project personnel*—10 points.

(f) *Adequacy of resources*—10 points.

(g) *Quality of the management plan*—10 points.

(h) *Quality of the project evaluation*—5 points.

Allowable Activities

States receiving grants under this supplemental competition may use the grant funds to support activities directly related to increasing (a) the enrollment of low-income individuals in advanced placement courses; (b) the participation of low-income individuals in advanced placement tests; and (c) the availability of advanced placement courses in schools serving high-poverty areas.

Applicable Statute and Regulations: Title VIII, part B of the 1998 Amendments (20 U.S.C. 1070a–11, note). The Education Department General Administrative Regulations (EDGAR) in 34 CFR parts 75, 76, 77, 79, 80, 81, 82, 85, and 86.

The following definitions and other provisions are taken from the Advanced Placement Incentive Program statute, in title VIII, part B of the 1998 Amendments (20 U.S.C. 1070a–11, note). They are repeated in this application notice for the convenience of the applicant.

Definitions

As used in this section:

(a) The term ''advanced placement test'' includes only an advanced placement test approved by the Secretary of Education for the purposes of this program.

(b) The term ''low-income individual'' has the meaning given the term in section 402A(g)(2) of the Higher Education Act of 1965 (HEA) (20 U.S.C. 1070a–11(g)(2)).

Note: Under section 402A(g)(2) of the HEA, as amended, the term ''low-income individual'' means an individual from a family whose taxable income for the preceding year did not exceed 150 percent of an amount equal to the poverty level determined by using criteria of poverty established by the Bureau of the Census (20 U.S.C. 1070a–11(g)(2)).

Information Dissemination

The SEA shall disseminate information regarding the availability of test fee payments under this program to eligible individuals through secondary school teachers and guidance counselors.

Supplementation of Funding

Funds provided under this program must be used to supplement and not supplant other non-Federal funds that are available to assist low-income individuals in paying advanced placement test fees.

For Applications or Information Contact: Frank B. Robinson, U.S. Department of Education, School Improvement Programs, 400 Maryland Avenue, SW, Room 3C153, Washington, DC 20202–6140. Telephone (202) 260–2669. Internet address: frank__robinson@ed.gov. Individuals who use a telecommunications device for the deaf (TDD) may call the Federal Information Relay Service (FIRS) at 1–800–877–8339 between 8 a.m. and 8 p.m., Eastern time, Monday through Friday.

Individuals with disabilities may obtain this document in an alternate format (*e.g.*, Braille, large print, audiotape, or computer diskette) upon request to the contact person listed in the preceding paragraph. Individuals with disabilities may obtain a copy of the application package in an alternate format, also, by contacting that person. However, the Department is not able to reproduce in an alternate format the standard forms included in the application package.

Electronic Access to this Document

Anyone may view this document, as well as all other Department of Education documents published in the **Federal Register**, in text or portable document format (pdf) on the World Wide Web at either of the following sites:

http://ocfo.ed.gov/fedreg.htm
http://www.ed.gov/news.html

To use the pdf, you must have the Adobe Acrobat Reader Program with Search, which is available free at either of the previous sites. If you have questions about using the pdf, call the U.S. Government Printing Office toll free at 1–888–293–6498.

Note: The official version of a document is the document published in the **Federal Register**.

Program Authority: 20 U.S.C. 1070a–11, note.

Dated: June 29, 1999.

Judith Johnson,

Acting Assistant Secretary for Elementary and Secondary Education.

[FR Doc. 99–16861 Filed 7–1–99; 8:45 am]

BILLING CODE 4000–01–P

DEPARTMENT OF ENERGY

Environmental Management Site-Specific Advisory Board, Rocky Flats

AGENCY: Department of Energy.

ACTION: Notice of open meeting.

SUMMARY: This notice announces a meeting of the Environmental Management Site-Specific Advisory Board (EM SSAB), Rocky Flats. The Federal Advisory Committee Act (Pub. L. No. 92–463, 86 Stat. 770) requires that public notice of these meetings be announced in the **Federal Register**.

DATES: Monday, July 19, 1999 6:30 p.m.—9:30 p.m.

ADDRESSES: College Hill Library, (Front Range Community College), 3705 West 112th Avenue, Westminster, CO 80021.

FOR FURTHER INFORMATION CONTACT: Ken Korkia, Board/Staff Coordinator, Rocky Flats Citizens Advisory Board, 9035 North Wadsworth Parkway, Suite 2250, Westminster, CO 80021; telephone (303) 420–7855; fax (303) 420–7579.

SUPPLEMENTARY INFORMATION:

Purpose of the Board: The purpose of the Board is to make recommendations to DOE and its regulators in the areas of environmental restoration, waste management, and related activities.

Tentative Agenda

1. The Board will review and finalize its comments on the Transuranic

Waste Storage Environmental Assessment.
2. The RFCAB will receive a presentation on and begin discussion of proposed caps over contaminated areas at Rocky Flats.
3. The Board will review and discuss the first draft of its ''Vision'' statement.
4. Other Board business may be conducted as necessary.

Public Participation: The meeting is open to the public. Written statements may be filed with the Board either before or after the meeting. Individuals who wish to make oral statements pertaining to agenda items should contact Ken Korkia at the address or telephone number listed above. Requests must be received at least five days prior to the meeting and reasonable provision will be made to include the presentation in the agenda. The Deputy Designated Federal Officer is empowered to conduct the meting in a fashion that will facilitate the orderly conduct of business. Each individual wishing to make public comment will be provided a maximum of five minutes to present their comments.

Minutes: The minutes of this meeting will be available for public review and copying at the Freedom of Information Public Reading Room, 1E–190, Forrestal Building, 1000 Independence Avenue, SW, Washington, DC 20585 between 9:00 a.m. and 4:00 p.m., Monday–Friday, except Federal holidays. Minutes will also be available at the Public Reading Room located at the Board's office at 9035 North Wadsworth Parkway, Suite 2250, Westminster, CO 80021; telephone (303) 420–7855. Hours of operation for the Public Reading Room are 9:00 a.m. to 4:00 p.m. Monday through Friday. Minutes will also be made available by writing or calling Deb Thompson at the address or telephone number listed above.

Issued at Washington, DC on June 29, 1999.

Rachel M. Samuel,

Deputy Advisory Committee Management Officer.

[FR Doc. 99–16898 Filed 7–1–99; 8:45 am]

BILLING CODE 6450–01–P

DEPARTMENT OF ENERGY

Environmental Management Site-Specific Advisory Board, Idaho

AGENCY: Department of Energy.

ACTION: Notice of open meeting.

SUMMARY: This notice announces a meeting of the Environmental Management Site-Specific Advisory Board (EM SSAB), Idaho National Engineering and Environmental Laboratory (INEEL). Federal Advisory Committee Act (Pub. L. No. 92–463, 86 Stat. 770) requires that public notice of these meetings be announced in the **Federal Register**.

DATES: Tuesday, July 20, 1999, 8:00 a.m.–6:00 p.m. Wednesday, July 21, 1999, 8:00 a.m.–5:00 p.m.

ADDRESSES: The Miles & Virginia Willard Fine Arts Center, 498 A Street, Idaho Falls, Idaho 83402.

FOR FURTHER INFORMATION CONTACT: Ms. Wendy Lowe, INEEL CAB Facilitator Jason Associates Corporation, 477 Shoup Avenue, Suite 205 Idaho Falls, ID 83402, (208–522–1662) or visit the Board's internet homepage at *http://www.ida.net/users/cab;* or contact Mr. Charles Rice, INEEL CAB Chair, c/o Jason Associates Corporation.

SUPPLEMENTARY INFORMATION:

Purpose of the Board: The purpose of the Board is to make recommendations to DOE and its regulators in the areas of future use, cleanup levels, waste disposition and cleanup priorities at the INEEL.

Tentative Agenda

Presentations and discussions on the following:

Meeting the new DOE–ID Site Manager, Beverly Cook

Selection rationale for the new Site contractor

Proposed Work Plan for the Remedial Investigation and Feasibility Study (RI/FS) for the soils at the Idaho Nuclear Technology Engineering Center (INTEC) Tank Farm

DOE's approach to closure of the Tank Farm

Stewardship planning activities for the INEEL

Preparation for the upcoming SSAB Seminar on Stewardship

Follow-up to the SSAB Seminar on Transportation

Election of a new Board member to fill a recent vacancy

Status reports on the following:

Spent fuel transfers to dry storage and the progress of the privatization project

Finalization of the following recommendations:

Draft Environmental Impact Statement (EIS) for Electrometallurgical Treatment for Na-Bonded Fuel

Supplement Analysis for the Surplus Plutonium Disposition Draft EIS (Agenda topics may change up to the day of the meeting; please call the **FOR FURTHER INFORMATION CONTACT** in this notice for the current agenda or visit the Internet site.

Public Participation: This meeting is open to the public. Written statements may be filed with the Board facilitator either before or after the meeting. Individuals who wish to make oral presentations pertaining to agenda items should contact the Board Chair at the address or telephone number listed above. Requests must be received 5 days prior to the meeting and reasonable provision will be made to include the presentation in the agenda. The Deputy Designated Federal Officer, Jerry Bowman, Assistant Manager for Laboratory Development, Idaho Operations Office, U.S. Department of Energy, is empowered to conduct the meeting in a fashion that will facilitate the orderly conduct of business. Every individual wishing to make public comment will be provided equal time to present their comments.

Minutes: The minutes of this meeting will be available for public review and copying at the Freedom of Information Public Reading Room, 1E–190, Forrestal Building, 1000 Independence Avenue, SW, Washington, DC 20585 between 9:00 a.m. and 4:00 p.m., Monday–Friday, except Federal holidays. Minutes will also be available by writing to Charles M. Rice, INEEL CAB Chair, 477 Shoup Ave., Suite 205, Idaho Falls, Idaho 83402 or by calling the Board's facilitator at (208) 522–1662.

Issued at Washington, DC on June 29, 1999.

Rachel Samuel,

Deputy Advisory Committee Management Officer.

[FR Doc. 99–16899 Filed 7–1–99; 8:45 am]

BILLING CODE 6450–01–P

DEPARTMENT OF ENERGY

Federal Energy Regulatory Commission

[Docket No. CP99–564–000]

Coral Mexico Pipeline, LLC; Notice of Application for Presidential Permit and Natural Gas Act Section 3 Authorization

June 28, 1999.

Take notice that on June 18, 1999, Coral Mexico Pipeline, LLC (Coral Mexico), 1301 McKinney Street, Suite 700, Houston, Texas 77010, filed an application in Docket No. CP99–564–000 seeking a Presidential Permit, pursuant to Executive Orders Nos. 10485 and 12038, and a Natural Gas Act Section 3 authorization, pursuant to Part 153 of the Commission's Regulations, all as more fully described in Coral Mexico's application. The details of Coral Mexico's application are set forth

in its filing, which is on file with the Commission and open to public inspection.

The text of this application may also be viewed at http://www.ferc.fed.us/online/rims.htm (call 202–208–2222 for help). Any initial questions regarding the application should be directed to Lee S. Baskin, a company official, at the above address or by phone at (713) 230–7501.

Coral Mexico seeks authority to site, construct, operate, maintain, and connect pipeline facilities at the International Boundary between the United States and Mexico in Hidalgo County, Texas for purposes of importing natural gas into the United States from Mexico and exporting gas from the United States to Mexico. The proposed facilities will consist of about 1,375 feet of 24-inch pipe and will connect existing and new natural gas pipeline facilities owned, or to be owned, by Pemex Gas y Petroquimica Basica in Mexico with about 97 miles of new intrastate pipeline that will extend from the International Boundary in Hidalgo County northward to Kleburg County, Texas. The proposed facilities will have a design capacity of about 300,000 MMcf/d.

Any person desiring to be heard or to make any protest with reference to said application should on or before July 19, 1999 file with the Federal Energy Regulatory Commission, 888 First Street, NE, Washington, DC 20426, a motion to intervene or a protest in accordance with the requirements of the Commission's Rules of Practice and Procedure, 18 CFR 385.211 or 385.214, and the Commission's Regulations under the Natural Gas Act, 18 CFR 157.10. All protests filed with the Commission will be considered by it in determining the appropriate action to be taken, but will not serve to make the protestants parties to the proceeding. Any person wishing to become a party to a proceeding or to participate as a party in any hearing therein must file a motion to intervene in accordance with the Commission's Rules of Practice and Procedure.

Take further notice that, pursuant to the authority contained in and subject to jurisdiction conferred upon the Federal Energy Regulatory Commission by Sections 3 and 15 of the Natural Gas Act and the Commission's Rules of Practice and Procedure, a hearing will be held without further notice before the Commission or its designee on this application if no motion to intervene is filed within the time required herein, if the Commission on its own review of the matter finds that a grant of the certificate is required by the public convenience and necessity. If a motion for leave to intervene is timely filed, or if the Commission on its own motion believes that a formal hearing is required, further notice of such hearing will be duly given. Under the procedure herein provided for, unless otherwise advised, it will be unnecessary for Coral Mexico to appear or be represented at the hearing.

David P. Boergers,

Secretary.

[FR Doc. 99–16901 Filed 7–1–99; 8:45 am]

BILLING CODE 6717–01–M

DEPARTMENT OF ENERGY

Federal Energy Regulatory Commission

[Docket No. CP99–565–000]

K N Interstate Gas Transmission Co.; Notice of Request Under Blanket Authorization

June 28, 1999.

Take notice that on June 21, 1999, K N Interstate Gas Transmission Co. (KNI), PO Box 281304, Lakewood, Colorado, 80228, filed in Docket No. CP99–565–000 a request pursuant to Section 157.211 of the Commission's Regulations under the Natural Gas Act [18 CFR 157.211] for authorization to construction and operate one new delivery point to provide service to the City of Broken Bow located in Custer County, Nebraska. Gas delivered through the proposed delivery point will be used by the City of Broken Bow for the generation of electricity, all as more fully set forth in the request on file with the Commission and open to public inspection. This filing may be viewed on the web at http://www.ferc.fed.us/online/rims.htm (call 202–208–2222 for assistance).

Communications concerning this filing should be addressed to: Richard E. Kaup, Director, Certificates, K N Interstate Gas Transmission Co., PO Box 281304, Lakewood, CO 80228, (303) 763–3558.

Any person or the Commission's Staff may, within 45 days after issuance of the instant notice by the Commission, file pursuant to Rule 214 of the Commission's Procedural Rules [18 CFR 385.214] a motion to intervene or notice of intervention and pursuant to Section 157.205 of the Regulations under the Natural Gas Act [18 CFR 157.205] a protest to the request. If no protest is filed within the time allowed therefor, the proposed activity shall be deemed to be authorized effective the day after the time allowed for filing a protest. If a protest is filed and not withdrawn within 30 days after the time allowed for filing a protest, the instant request shall be treated as an application for authorization pursuant to Section 7 of the Natural Gas Act.

David P. Boergers,

Secretary.

[FR Doc. 99–16902 Filed 7–1–99; 8:45 am]

BILLING CODE 6717–01–M

DEPARTMENT OF ENERGY

Federal Energy Regulatory Commission

[Docket No. RP99–282–001]

Reliant Energy Gas Transmission Company; Notice of Proposed Changes in FERC Gas Tariff and Shorten Protest Date

June 28, 1999.

Take notice that on June 25, 1999, Reliant Energy Gas Transmission Company (REGT) tendered for filing tariff sheets in compliance with the Commission's June 16, 1999 ''Order Approving Tariff Filing, Subject to Conditions,'' 87 FERC ¶ 61,298, which REGT desires to take effect July 1, 1999.

REGT states that these tariff sheets would institute Rate Schedule HFT to provide hourly firm transportation service.

Any person desiring to protest said filing should file a protest with the Federal Energy Regulatory Commission, 888 First Street, NE., Washington, DC 20426, in accordance with Section 385.211 of the Commission's rules and Regulations. All such protests must be filed on or before July 2, 1999. Protests will be considered by the Commission in determining the appropriate action to be taken, but will not serve to make protestants parties to the proceedings. Copies of this filing are on file with the Commission and are available for public inspection in the Public Reference Room. This filing may be viewed on the web at http://www.ferc.fed.us/online/rims.htm (call 202–208–2222 for assistance).

David P. Boergers,

Secretary.

[FR Doc. 99–16904 Filed 7–1–99; 8:45 am]

BILLING CODE 6717–01–M

DEPARTMENT OF ENERGY

Federal Energy Regulatory Commission

[Project No. 11549–001 Wisconsin]

Dunkirk Water Power Company, Inc.; Notice of Availability of Final Environmental Assessment

June 28, 1999.

In accordance with the National Environmental Policy Act of 1969 and the Federal Energy Regulatory Commission's (Commission) regulations, 18 CFR Part 380 (Order No. 486, 52 F.R. 47897), the Office of Hydropower Licensing has reviewed the application for exemption from licensing for the Dunkirk Hydroelectric Project, located on the Yahara River in Dane County, Wisconsin, and has prepared a final Environmental Assessment (FEA) for the project.

Copies of the FEA are available in the Public Reference Branch, Room 2–A, of the Commission's offices at 888 First Street, NE, Washington, DC 20426 for public inspection. This filing may be viewed on the web at http://www.ferc.fed./us/online/rims.htm. For further information, contact Ed Lee at (202) 219–2809 or Susan O'Brien at (202) 219–2840.

David P. Boergers,

Secretary.

[FR Doc. 99–16903 Filed 7–1–99; 8:45 am]

BILLING CODE 6717–01–M

DEPARTMENT OF ENERGY

Federal Energy Regulatory Commission

[Docket No. CP97–168–003]

Alliance Pipeline L.P.; Notice of Intent To Prepare an Environmental Assessment for the Proposed Albert Lea Compressor Station Relocation Project and Request for Comments on Environmental Issues

June 28, 1999.

The staff of the Federal Energy Regulatory Commission (FERC or Commission) is preparing an environmental assessment (EA) that will discuss the environmental impacts involved with Alliance Pipeline L.P.'s (Alliance) construction and operation of the Albert Lea Compressor Station at its new location in Freeborn Country, Minnesota.[1] This facility would consist of 31,200 horsepower (hp) of compression and other appurtenant facilities.

Summary of the Proposed Project

The Albert Lea Compressor Station was originally proposed by Alliance as part of the 874-mile-long Alliance Pipeline Project extending between Sherwood, North Dakota at the Canadian border, to the Chicago, Illinois area. The staff of the Commission prepared and issued the Alliance Pipeline Project Final Environmental Impact Statement in August 1998. The Commission issued a Certificate of Public Convenience and Necessity to Alliance by an Order issued on September 17, 1999.

Included in the Order was the approval of the construction and operation of the Albert Lea Compressor Station at pipeline milepost 558.6 in Freeborn County, Minnesota. However, Alliance was unable to reach an agreement with the landowner to purchase the property at the compressor station's original location. Therefore, Alliance decided to relocate the station, rather than use the right of eminent domain granted by the Commission's certificate. The currently proposed location is at pipeline milepost 560.0, approximately 1.4 miles southeast of its original location (see appendix 1).[2]

Land Requirements for Construction

Alliance has purchased a 17.2-acre parcel of land for the Construction of the proposed compressor station. Following construction, the fenced compressor station, site landscaping, and access road would occupy 10.8 acres. The remainder of the property would be leased for agricultural use in 2001.

The EA Process

The National Environmental Policy Act (NEPA) requires the Commission to take into account the environmental impacts that could result from an action whenever it considers the issuance of a Certificate of Public Convenience and Necessity. NEPA also requires us to discover and address concerns the public may have about proposals. We call this ''scoping''. The main goal of the scoping process is to focus the analysis in the EA on the important environmental issues. By this Notice of Intent, the Commission requests public comments on the scope of the issues it will address in the EA. All comments received are considered during the preparation of the EA. State and local government representatives are encouraged to notify their constituents of this proposed action and encourage them to comment on their areas of concern.

The EA will discuss impacts that could occur as a result of the construction and operation of the proposed project under these general headings:

- Geology and soils.
- Cultural resources.
- Erosion control and revegetation.
- Public safety.
- Air quality and noise.
- Land use and visual impacts.
- Alternative site locations.
- Endangered and threatened species.

We will also make recommendations on how to lessen or avoid impacts on the various resource areas.

Our independent analysis of the issues will be presented in the EA. Depending on the comments received during the scoping process, the EA may be published and mailed to Federal, state, and local agencies, public interest groups, interested individuals, affected landowners, newspapers, libraries, and the Commission's official service list for this proceeding. A comment period will be allotted for review if the EA is published. We will consider all comments on the EA before we make our recommendations to the Commission.

To ensure your comments are considered, please carefully follow the instructions in the public participation section below.

Public Participation

You can make a difference by providing us with your specific comments or concerns about the project. By becoming a commentor, your concerns will be addressed in the EA and considered by the Commission, You should focus your comments on the potential environmental effects of the proposal, alternatives to the proposal (including alternative locations), and measures to avoid or lessen environmental impact. The more specific your comments, the more useful they will be. Please carefully follow these instructions to ensure that your comments are received in time and properly recorded:

- Send two copies of your letter to: David P. Boergers, Secretary, Federal Energy Regulatory Commission, 888 First St., NE, Room 1A, Washington, DC 20426;
- Label one copy of the comments for the attention of the Environmental

[1] Alliance's amended application was filed with the Commission under Section 7 of the Natural Gas Act and Part 157 of the Commission's regulations. The original application in Docket No. CP97–168–000 was filed by Alliance on December 24, 1996.

[2] The appendices referenced in this notice are not being printing the **Federal Register.** Copies are available from the Commission's Public Reference and Files Maintenance Branch, 888 First Street, NE., Washington, DC 20426, or call (202) 208–1371. Copies of the appendices were sent to all those receiving this notice in the mail.

Review and Compliance Branch, PR–11.1;

- Reference Docket No. CP97–168–003; and
- Mail your comments so that they will be received in Washington, DC on or before July 26, 1999.

Becoming an Intervenor

In addition to involvement in the EA scoping process, you may want to become an official party to the proceeding known as an ''intervenor.'' Intervenors play a more formal role in the process. Among other things, intervenors have the right to receive copies of case-related Commission documents and filings by other intervenors. Likewise, each intervenor must provide 14 copies of its filings to the Secretary of the Commission and must send a copy of its filings to all other parties on the Commission's service list for this proceeding. If you want to become an intervenor you must file a motion to intervene according to Rule 214 of the Commission's Rules of Practice and Procedure (18 CFR 385.214) (see appendix 2). Only intervenors have the right to seek rehearing of the Commission's decision.

The date for filing timely motions to intervene in this proceeding has passed. Therefore, parties now seeking to file late interventions must show good cause, as required by section 385.214(b)(3), why this time limitation should be waived. Environmental issues have been viewed as good cause for late intervention. You do not need intervenor status to have your environmental comments considered.

Additional information about the proposed project is available from Mr. Paul McKee of the Commission's Office of External Affairs at (202) 208–1088 or on the FERC website (www.ferc.fed.us) using the ''RIMS'' link to information in this docket number. Click on the ''RIMS'' link, select ''Docket #'' from the RIMS Menu, and follow the instructions. For assistance with access to RIMS, the RIMS helpline can be reached at (202) 208–2222.

Similarly, the ''CIPS'' link on the FERC Internet website provides access to the texts of formal documents issued by the Commission, such as orders, notices, and rulemakings. From the FERC Internet website, click on the ''CIPS'' link, select ''Docket #'' from the CIPS menu, and follow the instructions. For assistance with access to CIPS, the CIPS helpline can be reached at (202) 208–2474.

David P. Boergers,

Secretary.

[FR Doc. 99–16900 Filed 7–1–99; 8:45 am]

BILLING CODE 6717–01–M

ENVIRONMENTAL PROTECTION AGENCY

[ER–FRL–6244–2]

Environmental Impact Statements and Regulations; Availability of EPA Comments

Availability of EPA comments prepared June 07, 1999 Through June 11, 1999 pursuant to the Environmental Review Process (ERP), under Section 309 of the Clean Air Act and Section 102(2)(c) of the National Environmental Policy Act as amended. Requests for copies of EPA comments can be directed to the Office of Federal Activities at (202) 564–7167. An explanation of the ratings assigned to draft environmental impact statements (EISs) was published in FR dated April 09, 1999 (64 FR 17362).

Draft EISs

ERP No. D–AFS–L65322–AK Rating EC2, Luck Lake Timber Sales Project, Implementation, Tongass National Forest, Thorne Bay Ranger District, Prince of Wales Island, AK.

Summary: EPA expressed environmental concerns related to the projects' potential environmental impacts and requested additional information on road construction, drinking water impacts, mitigation measures, and log transfer facility impacts.

ERP No. D–AFS–L65323–OR Rating EC2, Wolfmann Projects, Implementation, Blue River Landscape Strategy, Central Cascades Adaptive Management Area, Blue River Ranger District, Willamette National Forest, Lane County, OR.

Summary: EPA expressed environmental concerns about the limited information provided in the Monitoring plan, and a need for a cumulative effects analysis.

ERP No. D–AFS–L82017–ID Rating EC2, St. Joe Ranger District Noxious Weed Control Project, Implementation, Proposal from Control Noxious Weeds on 131 Sites, Idaho Panhandle National Forests, St. Joe Ranger District, Benewah, Latah and Shoshone Counties, Idaho.

Summary: EPA expressed environmental concerns about potential adverse water quality impacts from harvesting activities and related road construction. More detail on the noxious weed management plan should be included in the final EIS.

ERP No. D–FAA–B51017–MA Rating EO2, Logan Airside Improvements Planning Project (EOEA #10458), Construction and Operation of a new Unidirectional Runway 14/32, Centerfield Taxiway and Additional Taxiway Improvements, Boston Logan International Airport, Federal Funding, Airport Layout Plan and NPDES Permit, Boston, MA.

Summary: EPA expressed environment objections based on environmental justice issues and planning issues. EPA requested that the EIS look beyond airside improvements to resolve flight delay problems and consider the critical questions of whether the improvements will spur additional airport growth. EPA also suggested revisions to the noise impact modeling for the project.

ERP No. D–FRC–K05055–CA Rating EC2, Potter Valley Project, Protection and Maintenance of Fishery Resources, (FERC No. 22–110), Eel River, Lake and Mendocino County, CA.

Summary: EPA expressed concerns involving the long-term sustainability of the project, the range of alternatives analyzed, data gaps in the environmental impacts analysis, the scope and depth of the cumulative impacts analysis, and the relative weight given to various balancing factors used in the selection of a preferred alternative.

ERP No. DA–AFS–L65099–ID Rating EC2, Grade-Dukes Timber Sale, Proposal to Harvest and Regenerate Timber, Implementation, Cuddy Mountain Roadless Area, Payette National Forest, Weiser Ranger District, Washington County, Idaho.

Summary: EPA expressed environmental concerns about adverse impacts to water quality, limited quantitative data on aquatic conditions, and analysis of cumulative impacts from private lands.

Final EISs

ERP No. F–FRC–F03005–00, Vector Pipeline Project, Natural Gas Pipeline and Associated above ground Facilities Construction and Operation, Approval, Joliet, IL to Vector Canada at the International Border near St. Clair, MI, several counties, MI, IN, and IL.

Summary: EPA expressed environmental concerns regarding impacts of the project to forested upland and wetland areas and recommended additional mitigation measures to offset these impacts.

ERP No. F–NPS–B65007–VT, Marsh-Billings-Rockefeller National Historical Park, General Management Plan, Implementation, Woodstock, VT.

Summary: EPA had no objections to the project as described.

ERP No. FS–AFS–L67004–ID, Thompson Creek Molybdenum Project, Cyprus Mines Corporation, Custer County, ID.

Summary: EPA continues to have environmental concerns with the stability of the tailings impoundment, the potential for Acid mine drainage, adequacy of bonding and effectiveness of the reclamation plan.

Dated: June 29, 1999.

William D. Dickerson,

Director, NEPA Compliance Division, Office of Federal Activities.

[FR Doc. 99–16936 Filed 7–1–99; 8:45 am]

BILLING CODE 6560–50–U

ENVIRONMENTAL PROTECTION AGENCY

[ER–FRL–6244–1]

Environmental Impact Statements; Notice of Availability

Responsible Agency: Office of Federal Activities, General Information (202) 564–7167 OR (202) 564–7153.

Weekly receipt of Environmental Impact Statements

Filed June 21, 1999 Through June 25, 1999

Pursuant to 40 CFR 1506.9.

EIS No. 990210, FINAL EIS, AFS, MT, Pinkham Timber Sales and Associated Activities, Implementation, Kootenai National Forest, Rexford Ranger District, Lincoln County, MT, Due: August 02, 1999, Contact: Terry Chute (406) 296–2536.

EIS No. 990211, DRAFT EIS, IBR, CA, Programmatic—CALFED Bay-Delta Program, Develop and Implement Long-Term Comprehensive Plan to Restore Ecological Health and Improve Water Management, San Francisco Bay—Sacramento/San Joaquin River Bay-Delta, CA, Due: September 23, 1999, Contact: Rick Breitenbach (916) 657–2666.

EIS No. 990212, DRAFT SUPPLEMENT, COE, VA, Southeastern Public Service Authority of Virginia Regional Landfill Expansion Project, Revised Wetland Mitigation Plan and New Information on Waste Projections, COE Section 404 Permit Issuance, Cities of Chesapeake, Norfolk, Portsmouth, Suffolk, and Virginia Beach, Isle of Wight and Southampton Counties, VA, Due: August 16, 1999, Contact: Pamela K. Painter (757) 441–7654.

EIS No. 990213, FINAL SUPPLEMENT, AFS, CO, Telluride Ski Area Expansion Project, Implementation, New/Additional Information, Special-Use-Permit and COE Section 404 Permit, Grand Mesa Uncompahgre and Gunnison National Forests, Norwood Ranger District, San Miguel County, CO, Due: August 02, 1999, Contact: Arthur Bauer (970) 327–4261.

EIS No. 990214, FINAL EIS, FHW, CT, I–95 at New Haven Harbor Crossing (Quinnipiac River Bridge) Improvement, from Interchange 43 southwest to Interchange 53 northeast, Funding, COE Section 10 and 404 Permits, U.S. Coast Guard Bridge Permit, New Haven, East and West Haven, CT, Due: August 02, 1999, Contact: Donald West (860) 659–6703.

EIS No. 990215, DRAFT EIS, FRC, WA, Warm Creek (No. 10865) and Clearwater Creek (No. 11485) Hydroelectric Project, Issuance of License for the Construction and Operation, Located in the Middle Fork Nooksack river (MFNR) Basin, WA, Due: August 16, 1999, Contact: Timothy Looney (202) 219–2852.

EIS No. 990216, DRAFT EIS, USN, ME, South Weymouth Naval Air Station, Disposal and Reuse, Norfolk and Plymouth Counties, ME, Due: August 16, 1999, Contact: Robert K. Ostermueller (610) 595–0759.

EIS No. 990217, DRAFT EIS, BLM, ID, Dry Valley Mine—South Extension Project, Construction of two New Open Pit Mine, Special-Use-Permit, COE Section 404 Permit, Public and Private Land Used, Caribou County, ID, Due: August 31, 1999, Contact: Jeff Cundick (208) 478–6354. The US Department of Agriculture's, Forest Service and the US Department of Interior's Bureau of Land management are Joint Lead Agencies for this Project.

EIS No. 990218, FINAL EIS, BLM, ID, Owyhee Resource Management Plan, Implementation, Lower Snake River District, Owyhee County, ID, Due: August 02, 1999, Contact: Wallace Evans (208) 373–3803.

EIS No. 990219, FINAL EIS, SFW, WI, Karner Blue Butterfly Habitat Conservation Plan State-wide, Application for an Incidental Take Permit, several counties, WI, Due: August 02, 1999, Contact: Lisa Mandel (612) 713–5343.

Dated: June 29, 1999.

William D. Dickerson,

Director, NEPA Compliance Division, Office of Federal Activities.

[FR Doc. 99–16937 Filed 7–1–99; 8:45 am]

BILLING CODE 6560–50–U

ENVIRONMENTAL PROTECTION AGENCY

[PF–878; FRL–6085–6]

Notice of Filing; Pesticide Petition

AGENCY: Environmental Protection Agency (EPA).

ACTION: Notice.

SUMMARY: This notice announces the initial filing of pesticide petitions proposing the establishment of regulations for residues of certain pesticide chemicals in or on various food commodities.

DATES: Comments, identified by the docket control number PF–878, must be received on or before August 2, 1999.

ADDRESSES: By mail submit written comments to: Information and Records Integrity Branch, Public Information and Services Division (7502C), Office of Pesticides Programs, Environmental Protection Agency, 401 M St., SW., Washington, DC 20460. In person bring comments to: Rm. 1132, CM #2, 1921 Jefferson Davis Highway, Arlington, VA.

Comments and data may also be submitted electronically by following the instructions under ''SUPPLEMENTARY INFORMATION (CBI).'' No confidential business information (CBI) should be submitted through e-mail.

Information submitted as a comment concerning this document may be claimed confidential by marking any part or all of that information as CBI. CBI should not be submitted through e-mail. Information marked as CBI will not be disclosed except in accordance with procedures set forth in 40 CFR part 2. A copy of the comment that does not contain CBI must be submitted for inclusion in the public record. Information not marked confidential may be disclosed publicly by EPA without prior notice. All written comments will be available for public inspection in Rm. 1132 at the address given above, from 8:30 a.m. to 4 p.m., Monday through Friday, excluding legal holidays.

FOR FURTHER INFORMATION CONTACT: Joseph Tavano, Registration Support Branch, Registration Division (7505C), Office of Pesticide Programs, Environmental Protection Agency, 401 M St., SW., Washington, DC 20460. Office location, telephone number, and e-mail address: Rm. 214, Crystal Mall #2, 1921 Jefferson Davis Highway, Arlington, VA 22202, (703) 305–6411; e-mail: tavano.joseph@epa.gov.

SUPPLEMENTARY INFORMATION: EPA has received pesticide petitions as follows proposing the establishment and/or

amendment of regulations for residues of certain pesticide chemicals in or on various food commodities under section 408 of the Federal Food, Drug, and Comestic Act (FFDCA), 21 U.S.C. 346a. EPA has determined that this petition contains data or information regarding the elements set forth in section 408(d)(2); however, EPA has not fully evaluated the sufficiency of the submitted data at this time or whether the data supports granting of the petition. Additional data may be needed before EPA rules on the petition.

The official record for this notice of filing, as well as the public version, has been established for this notice of filing under docket control number [PF–878] (including comments and data submitted electronically as described below). A public version of this record, including printed, paper versions of electronic comments, which does not include any information claimed as CBI, is available for inspection from 8:30 a.m. to 4 p.m., Monday through Friday, excluding legal holidays. The official record is located at the address in ''ADDRESSES'' at the beginning of this document.

Electronic comments can be sent directly to EPA at:

opp-docket@epa.gov

Electronic comments must be submitted as an ASCII file avoiding the use of special characters and any form of encryption. Comment and data will also be accepted on disks in Wordperfect 5.1 file format or ASCII file format. All comments and data in electronic form must be identified by the docket control number (PF-878) and appropriate petition number. Electronic comments on this proposed rule may be filed online at many Federal Depository Libraries.

List of Subjects

Environmental protection, Agricultural commodities, Feed additives, Food additives, Pesticides and pests, Reporting and recordkeeping requirements.

Dated: June 23, 1999.

James Jones,

Director, Registration Division, Office of Pesticide Programs.

Summaries of Petitions

Petitioner summaries of the pesticide petitions are printed below as required by section 408(d)(3) of the FFDCA. The summaries of the petitions were prepared by the petitioners and represent the views of the petitioners. EPA is publishing the petition summaries verbatim without editing them in any way. The petition summary announces the availability of a description of the analytical methods available to EPA for the detection and measurement of the pesticide chemical residues or an explanation of why no such method is needed.

1. Rohm and Haas Company

PP 7F4824

EPA has received a pesticide petition (PP 7F4824) from Rohm and Haas Company, 100 Independence Mall West, Philadelphia, PA 19106-2399 proposing, pursuant to section 408(d) of the Federal Food, Drug and Cosmetic Act, 21 U.S.C. 346a(d), to amend 40 CFR part 180 by establishing a tolerances for indirect or inadvertent residues of tebufenozide (benzoic acid, 3,5-dimethyl-1-(1,1-dimethylethyl)-2-(4-ethylbenzoyl)hydrazide) and its metabolite RH-111,788 in or on the raw agricultural commodity (RAC) foliage of legume vegetables at 0.1 parts per million (ppm) and forage, fodder hay, and straw of cereal grains at 0.5 ppm. EPA has determined that the petition contains data or information regarding the elements set forth in section 408(d)(2) of the FFDCA; however, EPA has not fully evaluated the sufficiency of the submitted data at this time or whether the data supports granting of the petition. Additional data may be needed before EPA rules on the petition.

A. Residue Chemistry

1. *Plant metabolism*. The metabolism of tebufenozide in plants (grapes, apples, rice, and sugar beets) is adequately understood for the purpose of this tolerance. The metabolism of tebufenozide in all crops was similar and involves oxidation of the alkyl substituents of the aromatic rings primarily at the benzylic positions. The extent of metabolism and degree of oxidation are a function of time from application to harvest. In all crops, parent compound comprised the majority of the total dosage. None of the metabolites were in excess of 10% of the total dosage. Tebufenozide, the metabolite, benzoic acid, 3,5-dimethyl-1-(1,1-dimethylethyl)-2-[4-(1-hydroxyethyl) benzoyl, and sugar conjugates of the metabolite were detected in a confined rotation crop study.

2. *Analytical method*. Validated high performance liquid chromatographic (HPLC) analytical methods using ultraviolet (UV) or mass selective (MS) detection are employed for measuring residues of tebufenozide and its metabolite in grains, forage, fodder, stover, hay, and straw. The methods involve extraction by blending with solvents, purification of the extracts by liquid-liquid partitions and final purification of the residues using solid phase extraction column chromatography. The limit of quantitation (LOQ) of the method for all matrices is 0.02 ppm for tebufenozide and its metabolite.

3. *Magnitude of residues*. Field rotation crop residue trials were conducted and residues of tebufenozide and its metabolite were measured. Results of analyses showed that residues of tebufenozide and its metabolite will not exceed 0.1 ppm in forage of legumes and 0.5 ppm in forage, hay, or straw of cereal grains.

B. Toxicological Profile

1. *Acute toxicity—Acute toxicity studies with technical grade*. Oral LD_{50} in the rat is > 5 grams for males and females (Ms/Fs) - Toxicity Category IV; dermal LD_{50} in the rat is = 5,000 milligrams/kilograms (mg/kg) for Ms/Fs - Toxicity Category III; inhalation LD_{50} in the rat is > 4.5 milligrams/per liter (mg/L) Toxicity Category III; primary eye irritation study in the rabbit is a non-irritant; primary skin irritation in the rabbit > 5 mg - Toxicity Category IV. Tebufenozide is not a sensitizer.

2. *Genotoxicty*. Several mutagenicity tests were all negative. These include an Ames assay with and without metabolic activation, an *in vivo* cytogenetic assay in rat bone marrow cells, and *in vitro* chromosome aberration assay in CHO cells, a CHO/HGPRT assay, a reverse mutation assay with *E. Coli*, and an unscheduled DNA synthesis assay (UDS) in rat hepatocytes.

3. *Reproductive and developmental toxicity*—i. In a prenatal developmental toxicity study in Sprague-Dawley rats 25/group tebufenozide was administered on gestation days 6–15 by gavage in aqueous methyl cellulose at dose levels of 50, 250, or 1,000 mg/kg/day and a dose volume of 10 milliliters/kilograms (ml/kg). There was no evidence of maternal or developmental toxicity; the maternal and developmental toxicity NOAEL was 1,000 mg/kg/day.

ii. In a prenatal developmental toxicity study conducted in New Zealand white rabbits 20/group, tebufenozide was administered in 5 ml/kg of aqueous methyl cellulose at gavage doses of 50, 250, or 1,000 mg/kg/day on gestation days 7-19. No evidence of maternal or developmental toxicity was observed; the maternal and developmental toxicity no-observed adverse effect level (NOAEL) was 1,000 mg/kg/day.

iii. In a 1993 2-generation reproduction study in Sprague-Dawley rats, tebufenozide was administered at dietary concentrations of 0, 10, 150, or 1,000 ppm (0, 0.8, 11.5, or 154.8 mg/kg/day for males and 0, 0.9, 12.8, or 171.1 mg/kg/day for females). The parental systemic NOAEL was 10 ppm (0.8/0.9 mg/kg/day for Ms/Fs, respectively) and the lowest-observed adverse effect level (LOAEL) was 150 ppm (11.5/12.8 mg/kg/day for Ms/Fs, respectively) based on decreased body weight (bwt) gain, and food consumption in males, and increased incidence and/or severity of splenic pigmentation. In addition, there was an increased incidence and severity of extramedullary hematopoiesis at 2,000 ppm. The reproductive NOAEL was 150 ppm. (11.5/12.8 mg/kg/day for Ms/Fs, respectively) and the LOAEL was 2,000 ppm (154.8/171.1 mg/kg/day for Ms/Fs, respectively) based on an increase in the number of pregnant females with increased gestation duration and dystocia. Effects in the offspring consisted of decreased number of pups per litter on postnatal days 0 and/or 4 at 2,000 ppm (154.8/171.1 mg/kg/day for Ms/Fs, respectively) with a NOAEL of 150 ppm (11.5/12.8 mg/kg/day for Ms/Fs, respectively).

iv. In a 1995 2-generation reproduction study in rats, tebufenozide was administered at dietary concentrations of 0, 25, 200, or 2,000 ppm (0, 1.6, 12.6, or 126.0 mg/kg/day for males and 0, 1.8, 14.6, or 143.2 mg/kg/day for females). For parental systemic toxicity, the NOAEL was 25 ppm (1.6/1.8 mg/kg/day in Ms/Fs, respectively), and the was 200 ppm (12.6/14.6 mg/kg/day in Ms/Fs), based on histopathological findings (congestion and extramedullary hematopoiesis) in the spleen. Additionally, at 2,000 ppm (126.0/143.2 mg/kg/day in Ms/Fs), treatment-related findings included reduced parental bwt gain and increased incidence of hemosiderin-laden cells in the spleen. Columnar changes in the vaginal squamous epithelium and reduced uterine and ovarian weights were also observed at 2,000 ppm, but the toxicological significance was unknown. For offspring, the systemic NOAEL was 200 ppm. (12.6/14.6 mg/kg/day in Ms/Fs), and the LOAEL was 2,000 ppm (126.0/143.2 mg/kg/day in Ms/Fs) based on decreased bwt on postnatal days 14 and 21.

4. *Subchronic toxicity*. In a 21–day dermal toxicity study, Crl: CD rats (6/sex/dose) received repeated dermal administration of either the technical 96.1% product RH-75,992 at 1,000 mg/kg/day limit dose (LTD) or the formulation 23.1% a.i. product RH-755,992 2F at 0, 62.5, 250, or 1,000 mg/kg/day, 6 hours/day, 5 days/week for 21 days. Under conditions of this study, RH-75,992 Technical or RH-75,992 2F demonstrated no systemic toxicity or dermal irritation at the highest dose tested (HDT) 1,000 mg/kg/ during the 21 day study. Based on these results, the NOAEL for systemic toxicity and dermal irritation in both sexes is 1,000 mg/kg/day HDT. A LOAEL for systemic toxicity and dermal irritation was not established.

5. *Chronic toxicity*—i. In a 1–year dog feeding study with a LOAEL of 250 ppm, 9 mg/kg/day for Ms/Fs dogs based on decreases in red blood cells (RBC), HCT, and HGB, increases in Heinz bodies, methemoglobin, MCV, MCH, reticulocytes, platelets, plasma total bilirubin, spleen weight, and spleen/bwt ratio, and liver/bwt ratio. Hematopoiesis and sinusoidal engorgement occurred in the spleen, and hyperplasia occurred in the marrow of the femur and sternum. The liver showed an increased pigment in the Kupffer cells. The NOAEL for systemic toxicity in both sexes is 50 ppm (1.9 mg/kg/day).

ii. An 18–month mouse carcinogenicity study with no carcinogenicity observed at dosage levels up to and including 1,000 ppm.

iii. A 2–year rat carcinogenicity with no carcinogenicity observed at dosage levels up to and including 2,000 ppm (97 mg/kg/day and 125 mg/kg/day for Ms/Fs, respectively).

6. *Animal metabolism*. The pharmacokinetics and metabolism of tebufenozide were studied in female Sprague-Dawley rats (3-6/sex/group) receiving a single oral dose of 3 or 250 mg/kg of RH-5992 ^{14}C labeled in one of three positions (A-ring, B-ring or N-butylcarbon). The extent of absorption was not established. The majority of the radiolabeled material was eliminated or excreted in the feces within 48 hours within 48 hours; small amounts (1 to 7% of the administered dose) were excreted in the urine and only traces were excreted in expired air or remained in the tissues. There was no tendency for bioaccumulation. Absorption and excretion were rapid. A total of 11 metabolites, in addition to the parent compound, were identified in the feces; the parent compound accounted for 96 to 99% of the administered radioactivity in the high dose group and 35 to 43% in the low dose group. No parent compound was found in the urine; urinary metabolites were not characterized. The identity of several fecal metabolites was confirmed by mass spectral analysis and other fecal metabolites were tentatively identified by cochromatography with synthetic standards. A pathway of metabolism was proposed based on these data. Metabolism proceeded primarily by oxidation of the three benzyl carbons, two methyl groups on the B-ring and an ethyl group on the A-ring to alcohols, aldehydes or acids. The type of metabolite produced varies depending on the position oxidized and extent of oxidation. The butyl group on the quaternary nitrogen also can be cleaved (minor), but there was no fragmentation of the molecule between the benzyl rings.

No qualitative differences in metabolism were observed between sexes, when high or low dose groups were compared or when different labeled versions of the molecule were compared.

7. *Metabolite toxicology*. The absorption and metabolism of tebufenozide were studied in a group of M/F bile-duct cannulated rats. Over a 72–hour period, biliary excretion accounted for 30% M to 34% F of the administered dose while urinary excretion accounted for about 5% of the administered dose and the carcass accounted for < 0.5% of the administered dose for both Ms/Fs. Thus systemic absorption (percent of dose recovered in the bile, urine and carcass) was 35% M to 39% F. The majority of the radioactivity in the bile (20% M to 24% F of the administered dose) was excreted within the first 6 hours post-dosing indicating rapid absorption. Furthermore, urinary excretion of the metabolites was essentially complete within 24 hours post-dosing. A large amount 67% F to 70% M of the administered dose was unabsorbed and excreted in the feces by 72 hours. Total recovery of radioactivity was 105% of the administered dose.

A total of 13 metabolites were identified in the bile; the parent compound was not identified, i.e. unabsorbed compound, nor were the primary oxidation products seen in the feces in the pharmacokinetics study. The proposed metabolic pathway proceeded primarily by oxidation of the benzylic carbons to alcohols, aldehydes, or acids. Bile contained most of the other highly oxidized products found in the feces. The most significant individual bile metabolites accounted for 5% to 18% of the total radioactivity (F and/or M). Bile also contained the previously undetected (in the pharmacokinetics study) ''A'' ring ketone and the ''B'' ring diol. The other major components were characterized as high molecular weight conjugates. No individual bile metabolite for > 5% of the total administered dose. Total bile

radioactivity accounted for about 17% of the total administered dose.

No major qualitative differences in biliary metabolites were observed between sexes. The metabolic profile in the bile was similar to the metabolic profile in the feces and urine.

C. Aggregate Exposure

1. *Dietary exposure—From food and feed uses.* Tolerances have been established (40 CFR 180.482) for the residues of tebufenozide, in or on walnuts at 0.1 ppm, apples at 1.0 ppm, pecans at 0.01 ppm and wine grapes at 0.5 ppm. Numerous section 18 tolerances have been established at levels ranging from 0.3 ppm in sugar beet roots to 5.0 ppm in turnip tops. Other tolerance petitions are pending at EPA with proposed tolerances ranging from 0.5 ppm in or on kiwifruit to 10 ppm in leafy and cole crop vegetables. The current petition requests establishment of tolerances due to indirect or inadvertent residues of tebufenozide and its metabolite in or on foliage of legume vegetables and forage, straw, and hay of cereal grains. Risk assessments were conducted by Rohm and Haas to assess dietary exposures and risks from tebufenozide, benzoic acid, 3,5-dimethyl-1-(1,1-dimethylethyl)-2-(4-ethylbenzoyl) hydrazide and are presented in the following discussion.

2. *Food*—i. *Acute exposure and risk.* Acute dietary risk assessments are performed for a food-use pesticide if a toxicological study has indicated the possibility of an effect of concern occurring as a result of a 1–day or single exposure. Toxicity observed in oral toxicity studies were not attributable to a single dose (exposure). No neuro- or systemic toxicity was observed in rats given a single oral administration of tebufenozide at 0, 500, 1,000 or 2,000 mg/kg. No maternal or developmental toxicity was observed following oral administration of tebufenozide at 1,000 mg/kg/day LTD during gestation to pregnant rats or rabbits. This risk is considered to be negligible.

ii. *Chronic exposure and risk.* The RfD used for the chronic dietary analysis is 0.018 mg/kg/day. In conducting this chronic dietary (food) exposure assessment, Rohm and Haas used tolerance level residues for pecans, walnuts, wine, and sherry, imported apples and all other commodities with established or pending tebufenozide tolerances; and percent crop-treated (%CT) information on some of these crops. Further refinement using anticipated residue values and additional %CT information would result in a lower estimate of chronic dietary exposure. The Novigen DEEM system was used for this chronic dietary exposure analysis. The subgroups listed below are the U.S. population (48 contiguous States); those for infants and children; and the other subgroups (adult) for which the percentage of the RfD occupied is greater than that occupied by the subgroup U.S. population (48 contiguous States). The results are summarized below:

Groups	RfD (Percentage)
U.S. Population	10.0
All Infants (<1 year)	12.2
Nursing Infants (<1 year old)	5.7
Non-Nursing Infants (<1 year old)	15.0
Children (1-6 years old)	22.5
Children (7-12 years old)	14.1
Females (13 + years old, nursing)	10.1
U.S. Population (autumn season)	10.3
U.S. Population (winter season)	10.1
Non-Hispanic Blacks	10.4
Non-Hispanic Other than Black or White	11.0
Northeast Region	10.3
Southern Region	10.1
Western Region	10.5
Pacific Region	10.7

3. *Drinking water*—i. *Acute exposure and risk.* Because no acute dietary endpoint was determined, Rohm and Haas concludes that there is a reasonable certainty of no harm from acute exposure from drinking water.

ii. *Chronic exposure and risk.* Submitted environmental fate studies suggest that tebufenozide is moderately persistent to persistent and mobile. Under certain conditions, tebufenozide appears to have the potential to contaminate ground and surface water through runoff and leaching; subsequently potentially contaminating drinking water. There are no established Maximum Contaminant Levels (MCL) for residues of tebufenozide in drinking water and no Health Advisories (HA) have been issued for tebufenozide; therefore, these could not be used as comparative values for risk assessment. Therefore, potential residue levels for drinking water exposure were calculated previously by EPA using GENEEC (surface water) and SCIGROW (ground water) for human health risk assessment. Because of the wide range of half-life values (66-729 days) reported for the aerobic soil metabolism input parameter a range of potential exposure values were calculated. In each case, the worst case upper bound exposure limits were then compared appropriate chronic drinking water level of concern (DWLOC). In each case, the calculated exposures based on model data were below the DWLOC.

4. *Non-dietary exposure.* Tebufenozide is not currently registered for use on any residential non-food sites. Therefore there is no chronic, short- or intermediate-term exposure scenario.

D. Cumulative Effects

Section 408(b)(2)(D)(v) requires that, when considering whether to establish, modify, or revoke a tolerance, the Agency consider ''available information'' concerning the cumulative effects of a particular pesticide's residues and ''other substances that have a common mechanism of toxicity.'' The Agency believes that ''available information'' in this context might include not only toxicity, chemistry, and exposure data, but also scientific policies and methodologies for understanding common mechanisms of toxicity and conducting cumulative risk assessments. For most pesticides, although the Agency has some information in its files that may turn out to be helpful in eventually determining whether a pesticide shares a common mechanism of toxicity with any other

substances, EPA does not at this time have the methodologies to resolve the complex scientific issues concerning common mechanism of toxicity in a meaningful way. EPA has begun a pilot process to study this issue further through the examination of particular classes of pesticides. The Agency hopes that the results of this pilot process will increase the Agency's scientific understanding of this question such that EPA will be able to develop and apply scientific principles for better determining which chemicals have a common mechanism of toxicity and evaluating the cumulative effects of such chemicals. The Agency anticipates, however, that even as its understanding of the science of common mechanisms increases, decisions on specific classes of chemicals will be heavily dependent on chemical-specific data, much of which may not be presently available.

Although at present the Agency does not know how to apply the information in its files concerning common mechanism issues to most risk assessments, there are pesticides as to which the common mechanism issues can be resolved. These pesticides include pesticides that are toxicologically dissimilar to existing chemical substances (in which case the Agency can conclude that it is unlikely that a pesticide shares a common mechanism of activity with other substances) and pesticides that produce a common toxic metabolite (in which case common mechanism of activity will be assumed).

EPA does not have, at this time, available data to determine whether tebufenozide, benzoic acid, 3,5-dimethyl-1-(1,1-dimethylethyl)-2-(4-ethylbenzoyl) hydrazide has a common mechanism of toxicity with other substances or how to include this pesticide in a cumulative risk assessment. Unlike other pesticides for which EPA has followed a cumulative risk approach based on a common mechanism of toxicity, tebufenozide, benzoic acid, 3,5-dimethyl-1-(1,1-dimethylethyl)-2-(4-ethylbenzoyl) hydrazide does not appear to produce a toxic metabolite produced by other substances. For the purposes of this tolerance action, therefore, Rohm and Haas has not assumed that tebufenozide, benzoic acid, 3,5-dimethyl-1-(1,1-dimethylethyl)-2-(4-ethylbenzoyl) hydrazide has a common mechanism of toxicity with other substances.

E. Safety Determination

1. *U.S. population*—i *Acute risk*. Since no acute toxicological endpoints were established, no acute aggregate risk exists.

ii. *Chronic risk*. Using the conservative exposure assumptions described above, and taking into account the completeness and reliability of the toxicity data, Rohm and Haas has concluded that dietary (food only) exposure to tebufenozide will utilize 10.0% of the RfD for the U.S. population. Submitted environmental fate studies suggest that tebufenozide is moderately persistent to persistent and mobile; thus, tebufenozide could potentially leach to ground water and runoff to surface water under certain environmental conditions. The modeling data for tebufenozide indicate levels less than OPP's drinking water level of concern (DWLOC). EPA generally has no concern for exposures below 100% of the RfD because the RfD represents the level at or below which daily aggregate dietary exposure over a lifetime will not pose appreciable risks to human health. There are no registered residential uses of tebufenozide. Since there is no potential for exposure to tebufenozide from residential uses, Rohm and Haas does not expect the aggregate exposure to exceed 100% of the RfD.

iii. *Short- and intermediate-term risk*. Short- and intermediate-term aggregate exposure takes into account chronic dietary food and water (considered to be a background exposure level) plus indoor and outdoor residential exposure. Since there are currently no registered indoor or outdoor residential non-dietary uses of tebufenozide and no short- or intermediate-term toxic endpoints, short- or intermediate-term aggregate risk does not exist.

2. *Infants and children*. In assessing the potential for additional sensitivity of infants and children to residues of tebufenozide, benzoic acid, 3,5-dimethyl-1-(1,1-dimethylethyl)-2-(4-ethylbenzoyl) hydrazide, EPA previously considered data from developmental toxicity studies in the rat and rabbit and a 2-generation reproduction study in the rat. The developmental toxicity studies are designed to evaluate adverse effects on the developing organism resulting from maternal pesticide exposure gestation. Reproduction studies provide information relating to effects from exposure to the pesticide on the reproductive capability of mating animals and data on systemic toxicity.

FFDCA section 408 provides that EPA shall apply an additional tenfold margin of safety for infants and children in the case of threshold effects to account for pre-and postnatal toxicity and the completeness of the data base unless EPA determines that a different margin of safety will be safe for infants and children. Margins of safety are incorporated into EPA risk assessments either directly through use of a MOE analysis or through using uncertainty (safety) factors in calculating a dose level that poses no appreciable risk to humans. EPA believes that reliable data support using the standard uncertainty factor (usually 100 for combined inter- and intra-species variability) and not the additional tenfold MOE/uncertainty factor when EPA has a complete data base under existing guidelines and when the severity of the effect in infants or children or the potency or unusual toxic properties of a compound do not raise concerns regarding the adequacy of the standard MOE/safety factor.

3. *Developmental toxicity studies*—i. *Rats*. In a developmental toxicity study in rats, the maternal (systemic) NOAEL was 250 mg/kg/day. The LOAEL was 1,000 mg/kg/day, based on decreased bwt and food consumption. The developmental (pup) NOAEL was 1,000 mg/kg/day (HGT)

ii. *Rabbits*. In a developmental toxicity study in rabbits, the maternal and developmental NOAELs were 1,000 mg/kg/day highest dose tested (HDT).

iii. *Reproductive toxicity study*. In a 1993 2-generation reproduction study in Sprague-Dawley rats, tebufenozide was administered at dietary concentrations of 0, 10, 150, or 1,000 ppm (0, 0.8, 11.5, or 154.8 mg/kg/day for Ms and 0, 0.9, 12.8, or 171.1 mg/kg/day for Fs).The parental systemic NOAEL was 10 ppm (0.8/0.9 mg/kg/day for Ms/Fs, respectively) and the LOAEL was 150 ppm (11.5/12.8 mg/kg/day for Ms/Fs, respectively) based on decreased bwt gain, and food consumption in males, and increased incidence and/or severity of splenic pigmentation. In addition, there was an increased incidence and severity of extramedullary hematopoiesis at 2,000 ppm. The reproductive NOAEL was 150 ppm (11.5/12.8 mg/kg/day for Ms/Fs, respectively) and the LOAEL was 2,000 ppm (154.8/171.1 mg/kg/day for Ms/Fs, respectively) based on an increase in the number of pregnant females with increased gestation duration and dystocia. Effects in the offspring consisted of decreased number of pups per litter on postnatal days 0 and/or 4 at 2,000 ppm (154.8/171.1 mg/kg/day for Ms/Fs, respectively) with a NOAEL of 150 ppm (11.5/12.8 mg/kg/day for Ms/Fs, respectively).

In a 1995 2-generation reproduction study in rats, tebufenozide was administered at dietary concentrations of 0, 25, 200, or 2,000 ppm (0, 1.6, 12.6, or 126.0 mg/kg/day for males and 0, 1.8, 14.6, or 143.2 mg/kg/day for females). For parental systemic toxicity, the

NOAEL was 25 ppm (1.6/1.8 mg/kg/day in Ms/Fs, respectively), and the LOAEL was 200 ppm (12.6/14.6 mg/kg/day in males and females), based on histopathological findings (congestion and extramedullary hematopoiesis) in the spleen. Additionally, at 2,000 ppm (126.0/143.2 mg/kg/day in Ms/Fs), treatment-related findings included reduced parental body weight gain and increased incidence of hemosiderin-laden cells in the spleen. Columnar changes in the vaginal squamous epithelium and reduced uterine and ovarian weights were also observed at 2,000 ppm, but the toxicological significance was unknown. For offspring, the systemic NOAEL was 200 ppm (12.6/14.6 mg/kg/day in Ms/Fs), and the LOAEL was 2,000 ppm (126.0/143.2 mg/kg/day in M/F) based on decreased bwt on postnatal days 14 and 21.

iv. *Pre- and postnatal sensitivity*. The toxicology data base for tebufenozide is complete and includes acceptable developmental toxicity studies in both rats and rabbits as well as a 2-generation reproductive toxicity studies in rats. EPA determined that the data provided no indication of increased sensitivity of rats or rabbits to *in utero* and/or postnatal exposure to tebufenozide. No maternal or developmental findings were observed in the prenatal developmental toxicity studies at doses up to 1,000 mg/kg/day in rats and rabbits. In the 2-generation reproduction studies in rats, effects occurred at the same or lower treatment levels in the adults as in the offspring.

4. *Acute risk*. Since no acute toxicological endpoints were established, no acute aggregate risk exists.

5. *Chronic risk*. Using the conservative exposure assumptions described above, Rohm and Haas has concluded that aggregate exposure to tebufenozide, benzoic acid, 3,5-dimethyl-1-(1,1-dimethylethyl)-2-(4-ethylbenzoyl) hydrazide from food will utilize from 10.0% of the RfD for the U.S. population to 22.5% of the RfD for children 1-6 years old. The potential for exposure to tebufenozide in drinking water does not exceed EPA's level of concern. There are currently no tebufenozide residential or non-dietary exposure scenarios. EPA generally has no concern for exposures below 100% of the RfD because the RfD represents the level at or below which daily aggregate dietary exposure over a lifetime will not pose appreciable risks to human health. Rohm and Haas does not expect the aggregate exposure to exceed 100% of the RfD. Rohm and Haas concludes that there is a reasonable certainty that no harm will result to infants and children from aggregate exposure to tebufenozide, benzoic acid, 3,5-dimethyl-1-(1,1-dimethylethyl)-2-(4-ethylbenzoyl) hydrazide residues.

6. *Short- or intermediate-term risk*. Since no short- and intermediate-term toxicological endpoints were established by EPA, no acute aggregate risk exists.

F. International Tolerances

There are currently no CODEX, Canadian or Mexican maximum residue levels (MRLs) established for tebufenozide in rotation crops so no harmonization issues are required for this action.

2. Rohm and Haas Company

9F5077

EPA has received a pesticide petition (9F5077) from Rohm and Haas Company, 100 Independence Mall West, Philadelphia, PA 19106-2399 proposing, pursuant to section 408(d) of the Federal Food, Drug, and Cosmetic Act (FFDCA), 21 U.S.C. 346a(d), to amend 40 CFR part 180 by establishing a tolerance for residues of tebufenozide (benzoic acid, 3,5-dimethyul-,1-(1,1-dimethylethyl)-2-(4-ethylbenzoyl)hydrazide) in or on the RAC crop grouping, tree nuts, at 0.1 ppm and in or almond hulls at 25 ppm. EPA has determined that the petition contains data or information regarding the elements set forth in section 408(d)(2) of the FFDCA; however, EPA has not fully evaluated the sufficiency of the submitted data at this time or whether the data supports granting of the petition. Additional data may be needed before EPA rules on the petition.

A. Residue Chemistry

1. *Plant metabolism*. The metabolism of tebufenozide in plants (grapes, apples, rice and sugar beets) is adequately understood for the purpose of this tolerance. The metabolism of tebufenozide in all crops was similar and involves oxidation of the alkyl substituents of the aromatic rings primarily at the benzylic positions. The extent of metabolism and degree of oxidation are a function of time from application to harvest. In all crops, parent compound comprised the majority of the total dosage. None of the metabolites were in excess of 10% of the total dosage.

2. *Analytical method*. Validated high performance liquid chromatographic (HPLC) analytical methods using ultraviolet (UV) or mass selective (MS) detection are employed for measuring residues of tebufenozide and its metabolite in nut meat and almond hulls. The methods involve extraction by blending with solvents, purification of the extracts by liquid-liquid partitions and final purification of the residues using solid phase extraction column chromatography. The limit of quantitation (LOQ) of the method for all matrices is 0.01 ppm for tebufenozide.

3. *Magnitude of residues*. Field residue trials were conducted in the representative nut crops pecans and almonds and residues of tebufenozide were measured in nut meat and almond hulls. Results of analyses showed that residues of tebufenozide will not exceed 0.1 ppm in nut meat and 25 ppm in almond hulls.

B. Toxicological Profile

1. *Acute toxicity*. Acute toxicity studies with technical grade. Oral LD_{50} in the rat is > 5 grams for Ms/Fs - Toxicity Category IV; dermal LD_{50} in the rat is = 5,000 mg/kg for Ms/Fs - Toxicity Category III; inhalation LD_{50} in the rat is > 4.5 mg/l - Toxicity Category III; primary eye irritation study in the rabbit is a non-irritant; primary skin irritation in the rabbit > 5 mg - Toxicity Category IV. Tebufenozide is not a sensitizer.

2. *Genotoxicty*. Several mutagenicity tests were all negative. These include an Ames assay with and without metabolic activation, an *in vivo* cytogenetic assay in rat bone marrow cells, and *in vitro* chromosome aberration assay in CHO cells, a CHO/HGPRT assay, a reverse mutation assay with *E. Coli*, and an unscheduled DNA synthesis assay (UDS) in rat hepatocytes.

3. *Reproductive and developmental toxicity*—i. In a prenatal developmental toxicity study in Sprague-Dawley rats (25/group), tebufenozide was administered on gestation days 6–15 by gavage in aqueous methyl cellulose at dose levels of 50, 250, or 1,000 mg/kg/day and a dose volume of 10 ml/kg. There was no evidence of maternal or developmental toxicity; the maternal and developmental toxicity NOAEL was 1,000 mg/kg/day.

ii. In a prenatal developmental toxicity study conducted in New Zealand white rabbits 20/group, tebufenozide was administered in 5 ml/kg of aqueous methyl cellulose at gavage doses of 50, 250, or 1,000 mg/kg/day on gestation days 7-19. No evidence of maternal or developmental toxicity was observed; the maternal and developmental toxicity NOAEL was 1,000 mg/kg/day.

iii. In a 1993 2-generation reproduction study in Sprague-Dawley rats, tebufenozide was administered at dietary concentrations of 0, 10, 150, or 1,000 ppm (0, 0.8, 11.5, or 154.8 mg/kg/

day for males and 0, 0.9, 12.8, or 171.1 mg/kg/day for females). The parental systemic NOAEL was 10 ppm (0.8/0.9 mg/kg/day for M/F, respectively) and the LOAEL was 150 ppm (11.5/12.8 mg/kg/day for Ms/Fs, respectively) based on decreased bwt gain, and food consumption in males, and increased incidence and/or severity of splenic pigmentation. In addition, there was an increased incidence and severity of extramedullary hematopoiesis at 2,000 ppm. The reproductive NOAEL was 150 ppm. (11.5/12.8 mg/kg/day for M/F, respectively) and the LOAEL was 2,000 ppm (154.8/171.1 mg/kg/day for M/F, respectively) based on an increase in the number of pregnant females with increased gestation duration and dystocia. Effects in the offspring consisted of decreased number of pups per litter on postnatal days 0 and/or 4 at 2,000 ppm (154.8/171.1 mg/kg/day for Ms/Fs, respectively) with a NOAEL of 150 ppm (11.5/12.8 mg/kg/day for Ms/Fs, respectively).

iv. In a 1995 2-generation reproduction study in rats, tebufenozide was administered at dietary concentrations of 0, 25, 200, or 2,000 ppm (0, 1.6, 12.6, or 126.0 mg/kg/day for males and 0, 1.8, 14.6, or 143.2 mg/kg/day for females). For parental systemic toxicity, the NOAEL was 25 ppm (1.6/1.8 mg/kg/day in Ms/Fs, respectively), and the LOAEL was 200 ppm (12.6/14.6 mg/kg/day in Ms/Fs), based on histopathological findings (congestion and extramedullary hematopoiesis) in the spleen. Additionally, at 2,000 ppm (126.0/143.2 mg/kg/day in Ms/Fs), treatment-related findings included reduced parental bwt gain and increased incidence of hemosiderin-laden cells in the spleen. Columnar changes in the vaginal squamous epithelium and reduced uterine and ovarian weights were also observed at 2,000 ppm, but the toxicological significance was unknown. For offspring, the systemic NOAEL was 200 ppm (12.6/14.6 mg/kg/day in Ms/Fs), and the LOAEL was 2,000 ppm (126.0/143.2 mg/kg/day in Ms/Fs) based on decreased bwt on postnatal days 14 and 21.

4. *Subchronic toxicity*. In a 21-day dermal toxicity study, Crl: CD rats (6/sex/dose) received repeated dermal administration of either the technical 96.1% product RH-75,992 at 1,000 mg/kg/day limit dose (LTD) or the formulation 23.1% a.i. product RH-755,992 2F at 0, 62.5, 250, or 1,000 mg/kg/day, 6 hours/day, 5 days/week for 21–days. Under conditions of this study, RH-75,992 Technical or RH-75,992 2F demonstrated no systemic toxicity or dermal irritation at the highest dose tested (HDT) 1,000 mg/kg during the 21–day study. Based on these results, the NOAEL for systemic toxicity and dermal irritation in both sexes is 1,000 mg/kg/day HDT. A LOAEL for systemic toxicity and dermal irritation was not established.

5. *Chronic toxicity*—i. In a 1 year dog feeding study with a LOAEL of 250 ppm, 9 mg/kg/day for Ms/Fs dogs based on decreases in RBC, HCT, and HGB, increases in Heinz bodies, methemoglobin, MCV, MCH, reticulocytes, platelets, plasma total bilirubin, spleen weight, and spleen/bwt ratio, and liver/bwt ratio. Hematopoiesis and sinusoidal engorgement occurred in the spleen, and hyperplasia occurred in the marrow of the femur and sternum. The liver showed an increased pigment in the Kupffer cells. The NOAEL for systemic toxicity in both sexes is 50 ppm (1.9 mg/kg/day).

ii. An 18-month mouse carcinogenicity study with no carcinogenicity observed at dosage levels up to and including 1,000 ppm.

iii. A 2-year rat carcinogenicity with no carcinogenicity observed at dosage levels up to and including 2,000 ppm (97 mg/kg/day and 125 mg/kg/day for Ms/Fs, respectively).

6. *Animal metabolism*. The pharmacokinetics and metabolism of tebufenozide were studied in female Sprague-Dawley rats (3-6/sex/group) receiving a single oral dose of 3 or 250 mg/kg of RH-5992 14C labeled in one of three positions (A-ring, B-ring or N-butylcarbon). The extent of absorption was not established. The majority of the radiolabeled material was eliminated or excreted in the feces within 48 hours; small amounts (1 to 7% of the administered dose) were excreted in the urine and only traces were excreted in expired air or remained in the tissues. There was no tendency for bioaccumulation. Absorption and excretion were rapid. A total of 11 metabolites, in addition to the parent compound, were identified in the feces; the parent compound accounted for 96 to 99% of the administered radioactivity in the high dose group and 35 to 43% in the low dose group. No parent compound was found in the urine; urinary metabolites were not characterized. The identity of several fecal metabolites was confirmed by mass spectral analysis and other fecal metabolites were tentatively identified by cochromatography with synthetic standards. A pathway of metabolism was proposed based on these data. Metabolism proceeded primarily by oxidation of the three benzyl carbons, two methyl groups on the B-ring and an ethyl group on the A-ring to alcohols, aldehydes or acids. The type of metabolite produced varies depending on the position oxidized and extent of oxidation. The butyl group on the quaternary nitrogen also can be cleaved (minor), but there was no fragmentation of the molecule between the benzyl rings.

No qualitative differences in metabolism were observed between sexes, when high or low dose groups were compared or when different labeled versions of the molecule were compared.

7. *Metabolite toxicology*. The absorption and metabolism of tebufenozide were studied in a group of Ms/Fs bile-duct cannulated rats. Over a 72-hour period, biliary excretion accounted for 30% Ms to 34% Fs of the administered dose while urinary excretion accounted for about 5% of the administered dose and the carcass accounted for < 0.5% of the administered dose for both Ms/Fs. Thus systemic absorption (percent of dose recovered in the bile, urine and carcass) was 35% Ms to 39% Fs. The majority of the radioactivity in the bile (20% Ms to 24% Fs of the administered dose) was excreted within the first 6 hours post-dosing indicating rapid absorption. Furthermore, urinary excretion of the metabolites was essentially complete within 24 hours post-dosing. A large amount (67% Fs to 70% Ms) of the administered dose was unabsorbed and excreted in the feces by 72 hours. Total recovery of radioactivity was 105% of the administered dose.

A total of 13 metabolites were identified in the bile; the parent compound was not identified, i.e. unabsorbed compound, nor were the primary oxidation products seen in the feces in the pharmacokinetics study. The proposed metabolic pathway proceeded primarily by oxidation of the benzylic carbons to alcohols, aldehydes or acids. Bile contained most of the other highly oxidized products found in the feces. The most significant individual bile metabolites accounted for 5% to 18% of the total radioactivity (Fs and/or Ms). Bile also contained the previously undetected (in the pharmacokinetics study) ''A'' ring ketone and the ''B'' ring diol. The other major components were characterized as high molecular weight conjugates. No individual bile metabolite accounted for > 5% of the total administered dose. Total bile radioactivity accounted for about 17% of the total administered dose. No major qualitative differences in biliary metabolites were observed between sexes. The metabolic profile in the bile was similar to the metabolic profile in the feces and urine.

C. Aggregate Exposure

1. *Dietary exposure—From food and feed uses.* Tolerances have been established (40 CFR 180.482) for the residues of tebufenozide, in or on walnuts at 0.1 ppm, apples at 1.0 ppm, pecans at 0.01 ppm and wine grapes at 0.5 ppm. Numerous section 18 tolerances have been established at levels ranging from 0.3 ppm in sugar beet roots to 5.0 ppm in turnip tops. Other tolerance petitions are pending at EPA with proposed tolerances ranging from 0.5 ppm in or on kiwifruit to 10 ppm in leafy and cole crop vegetables. The current petition requests establishment of tolerances in or on tree nuts and almond hulls. Risk assessments were conducted by Rohm and Haas to assess dietary exposures and risks from tebufenozide, benzoic acid, 3,5-dimethyl-1-(1,1-dimethylethyl)-2-(4-ethylbenzoyl) hydrazide as follows.

2. *Food*—i. *Acute exposure and risk.* Acute dietary risk assessments are performed for a food-use pesticide if a toxicological study has indicated the possibility of an effect of concern occurring as a result of a 1 day or single exposure. Toxicity observed in oral toxicity studies were not attributable to a single dose (exposure). No neuro- or systemic toxicity was observed in rats given a single oral administration of tebufenozide at 0, 500, 1,000 or 2,000 mg/kg. No maternal or developmental toxicity was observed following oral administration of tebufenozide at 1,000 mg/kg/day (LTD) during gestation to pregnant rats or rabbits. This risk is considered to be negligible.

ii. *Chronic exposure and risk.* The reference dose (RfD) used for the chronic dietary analysis is 0.018 mg/kg/day. In conducting this chronic dietary (food) exposure assessment, Rohm and Haas used tolerance level residues for nut crops, wine, and sherry, imported apples and all other commodities with established or pending tebufenozide tolerances; and percent crop-treated (%CT) information for some of these crops. Further refinement using anticipated residue values and additional %CT information would result in a lower estimate of chronic dietary exposure. The Novigen DEEM system was used for this chronic dietary exposure analysis. The subgroups listed below are (i) the U.S. population (48 contiguous States); (ii) those for infants and children; and (iii) the other subgroups (adult) for which the percentage of the RfD occupied is greater than that occupied by the subgroup U.S. population (48 contiguous States). The results are summarized below:

Groups	RfD (percentage)
U.S. Population	10.0
All Infants (< 1 year)	12.2
Nursing Infants (< 1 year old)	5.7
Non-Nursing Infants (< 1 year old)	15.0
Children (1-6 years old)	22.5
Children (7-12 years old)	14.1
Females (13 + years old, nursing)	10.1
U.S. Population (autumn season)	10.3
U.S. Population (winter season)	10.1
Non-Hispanic Blacks	10.4
Non-Hispanic Other than Black or White	11.0
Northeast Region	10.3
Southern Region	10.1
Western Region	10.5
Pacific Region	10.7

3. *Drinking water*—i. *Acute exposure and risk.* Because no acute dietary endpoint was determined, Rohm and Haas concludes that there is a reasonable certainty of no harm from acute exposure from drinking water.

ii. *Chronic exposure and risk.* Submitted environmental fate studies suggest that tebufenozide is moderately persistent to persistent and mobile. Under certain conditions tebufenozide appears to have the potential to contaminate ground and surface water through runoff and leaching; subsequently potentially contaminating drinking water. There are no established Maximum Contaminant Levels (MCL) for residues of tebufenozide in drinking water and no Health Advisories (HA) have been issued for tebufenozide therefore these could not be used as comparative values for risk assessment. Therefore, potential residue levels for drinking water exposure were calculated previously by EPA using GENEEC (surface water) and SCIGROW (ground water) for human health risk assessment. Because of the wide range of half-life values (66-729 days) reported for the aerobic soil metabolism input parameter a range of potential exposure values were calculated. In each case the worst case upper bound exposure limits were then compared to appropriate chronic drinking water level of concern (DWLOC). In each case the calculated exposures based on model data were below the DWLOC.

4. *Non-dietary exposure.* From non-dietary exposure. Tebufenozide is not currently registered for use on any residential non-food sites. Therefore there is no chronic, short- or intermediate-term exposure scenario.

D. Cumulative Effects

Cumulative exposure to substances with common mechanism of toxicity. Section 408(b)(2)(D)(v) requires that, when considering whether to establish, modify, or revoke a tolerance, the Agency consider ''available information'' concerning the cumulative effects of a particular pesticide's residues and ''other substances that have a common mechanism of toxicity.'' The Agency believes that ''available information'' in this context might include not only toxicity, chemistry, and exposure data, but also scientific policies and methodologies for understanding common mechanisms of toxicity and conducting cumulative risk assessments. For most pesticides, although the Agency has some information in its files that may turn out to be helpful in eventually determining whether a pesticide shares a common mechanism of toxicity with any other substances, EPA does not at this time have the methodologies to resolve the complex scientific issues concerning common mechanism of toxicity in a meaningful way. EPA has begun a pilot process to study this issue further through the examination of particular classes of pesticides. The Agency hopes that the results of this pilot process will

increase the Agency's scientific understanding of this question such that EPA will be able to develop and apply scientific principles for better determining which chemicals have a common mechanism of toxicity and evaluating the cumulative effects of such chemicals. The Agency anticipates, however, that even as its understanding of the science of common mechanisms increases, decisions on specific classes of chemicals will be heavily dependent on chemical-specific data, much of which may not be presently available.

Although at present the Agency does not know how to apply the information in its files concerning common mechanism issues to most risk assessments, there are pesticides as to which the common mechanism issues can be resolved. These pesticides include pesticides that are toxicologically dissimilar to existing chemical substances (in which case the Agency can conclude that it is unlikely that a pesticide shares a common mechanism of activity with other substances) and pesticides that produce a common toxic metabolite (in which case common mechanism of activity will be assumed).

EPA does not have, at this time, available data to determine whether tebufenozide, benzoic acid, 3,5-dimethyl-1-(1,1-dimethylethyl)-2-(4-ethylbenzoyl) hydrazide has a common mechanism of toxicity with other substances or how to include this pesticide in a cumulative risk assessment. Unlike other pesticides for which EPA has followed a cumulative risk approach based on a common mechanism of toxicity, tebufenozide, benzoic acid, 3,5-dimethyl-1-(1,1-dimethylethyl)-2-(4-ethylbenzoyl) hydrazide does not appear to produce a toxic metabolite produced by other substances. For the purposes of this tolerance action, therefore, Rohm and Haas has not assumed that tebufenozide, benzoic acid, 3,5-dimethyl-1-(1,1-dimethylethyl)-2-(4-ethylbenzoyl) hydrazide has a common mechanism of toxicity with other substances.

E. Safety Determination

1. *U.S. population*—i. *Acute risk*. Since no acute toxicological endpoints were established, no acute aggregate risk exists.

ii. *Chronic risk*. Using the conservative exposure assumptions described above, and taking into account the completeness and reliability of the toxicity data, Rohm and Haas has concluded that dietary (food only) exposure to tebufenozide will utilize 10.0% of the RfD for the U.S. population. Submitted environmental fate studies suggest that tebufenozide is moderately persistent to persistent and mobile; thus, tebufenozide could potentially leach to ground water and runoff to surface water under certain environmental conditions. The modeling data for tebufenozide indicate levels less than OPP's DWLOC. EPA generally has no concern for exposures below 100% of the RfD because the RfD represents the level at or below which daily aggregate dietary exposure over a lifetime will not pose appreciable risks to human health. There are no registered residential uses of tebufenozide. Since there is no potential for exposure to tebufenozide from residential uses, Rohm and Haas does not expect the aggregate exposure to exceed 100% of the RfD.

iii. *Short- and intermediate-term risk*. Short- and intermediate-term aggregate exposure takes into account chronic dietary food and water (considered to be a background exposure level) plus indoor and outdoor residential exposure. Since there are currently no registered indoor or outdoor residential non-dietary uses of tebufenozide and no short- or intermediate-term toxic endpoints, short- or intermediate-term aggregate risk does not exist.

2. *Infants and children*. In assessing the potential for additional sensitivity of infants and children to residues of tebufenozide, benzoic acid, 3,5-dimethyl-1-(1,1-dimethylethyl)-2-(4-ethylbenzoyl) hydrazide, EPA previously considered data from developmental toxicity studies in the rat and rabbit and a 2-generation reproduction study in the rat. The developmental toxicity studies are designed to evaluate adverse effects on the developing organism resulting from maternal pesticide exposure gestation. Reproduction studies provide information relating to effects from exposure to the pesticide on the reproductive capability of mating animals and data on systemic toxicity. FFDCA section 408 provides that EPA shall apply an additional tenfold margin of safety for infants and children in the case of threshold effects to account for pre-and postnatal toxicity and the completeness of the data base unless EPA determines that a different margin of safety will be safe for infants and children. Margins of safety are incorporated into EPA risk assessments either directly through use of a margin of exposure (MOE) analysis or through using uncertainty (safety) factors in calculating a dose level that poses no appreciable risk to humans. EPA believes that reliable data support using the standard uncertainty factor (usually 100 for combined inter- and intra-species variability) and not the additional tenfold MOE/uncertainty factor when EPA has a complete data base under existing guidelines and when the severity of the effect in infants or children or the potency or unusual toxic properties of a compound do not raise concerns regarding the adequacy of the standard MOE safety factor.

3. *Developmental toxicity studies*—i. *Rats*. In a developmental toxicity study in rats, the maternal (systemic) NOAEL was 250 mg/kg/day. The LOAEL was 1,000 mg/kg/day, based on decreased bwt and food consumption. The developmental (pup) NOAEL was 1,000 mg/kg/day (HGT).

ii. *Rabbits*. In a developmental toxicity study in rabbits, the maternal and developmental NOAELs were 1,000 mg/kg/day (HDT).

iii. *Reproductive toxicity study*. In a 1993 2-generation reproduction study in Sprague-Dawley rats, tebufenozide was administered at dietary concentrations of 0, 10, 150, or 1,000 ppm (0, 0.8, 11.5, or 154.8 mg/kg/day for males and 0, 0.9, 12.8, or 171.1 mg/kg/day for females. The parental systemic NOAEL was 10 ppm (0.8/0.9 mg/kg/day for Ms/Fs, respectively) and the LOAEL was 150 ppm (11.5/12.8 mg/kg/day for Ms/Fs, respectively) based on decreased bwt, bwt gain, and food consumption in males, and increased incidence and/or severity of splenic pigmentation. In addition, there was an increased incidence and severity of extramedullary hematopoiesis at 2,000 ppm. The reproductive NOAEL was 150 ppm. (11.5/12.8 mg/kg/day for Ms/Fs, respectively) and the LOAEL was 2,000 ppm (154.8/171.1 mg/kg/day for Ms/Fs, respectively) based on an increase in the number of pregnant females with increased gestation duration and dystocia. Effects in the offspring consisted of decreased number of pups per litter on postnatal days 0 and/or 4 at 2,000 ppm (154.8/171.1 mg/kg/day for Ms/Fs, respectively) with a NOAEL of 150 ppm (11.5/12.8 mg/kg/day for males and females, respectively)

In a 1995 2-generation reproduction study in rats, tebufenozide was administered at dietary concentrations of 0, 25, 200, or 2,000 ppm (0, 1.6, 12.6, or 126.0 mg/kg/day for males and 0, 1.8, 14.6, or 143.2 mg/kg/day for females). For parental systemic toxicity, the NOAEL was 25 ppm (1.6/1.8 mg/kg/day in Ms/Fs, respectively), and the LOAEL was 200 ppm (12.6/14.6 mg/kg/day in Ms/Fs), based on histopathological findings (congestion and extramedullary hematopoiesis) in the spleen. Additionally, at 2,000 ppm (126.0/143.2 mg/kg/day in Ms/Fs), treatment-related findings included reduced parental bwt

gain and increased incidence of hemosiderin-laden cells in the spleen. Columnar changes in the vaginal squamous epithelium and reduced uterine and ovarian weights were also observed at 2,000 ppm, but the toxicological significance was unknown. For offspring, the systemic NOAEL was 200 ppm. (12.6/14.6 mg/kg/day in Ms/Fs), and the LOAEL was 2,000 ppm (126.0/143.2 mg/kg/day in Ms/Fs) based on decreased bwt on postnatal days 14 and 21.

iv. *Pre- and postnatal sensitivity*. The toxicology data base for tebufenozide is complete and includes acceptable developmental toxicity studies in both rats and rabbits as well as a 2-generation reproductive toxicity studies in rats.

EPA determined that the data provided no indication of increased sensitivity of rats or rabbits to *in utero* and/or postnatal exposure to tebufenozide. No maternal or developmental findings were observed in the prenatal developmental toxicity studies at doses up to 1,000 mg/kg/day in rats and rabbits. In the 2-generation reproduction studies in rats, effects occurred at the same or lower treatment levels in the adults as in the offspring.

v. *Acute risk*. Since no acute toxicological endpoints were established, no acute aggregate risk exists.

vi. *Chronic risk*. Using the conservative exposure assumptions described above, Rohm and Haas has concluded that aggregate exposure to tebufenozide, benzoic acid, 3,5-dimethyl-1-(1,1-dimethylethyl)-2-(4-ethylbenzoyl) hydrazide from food will utilize from 10.0% of the reference dose RfD for the U.S. population to 22.5% of the RfD for children 1-6 years old. The potential for exposure to tebufenozide in drinking water does not exceed EPA's level of concern. There are currently no tebufenozide residential or non-dietary exposure scenarios. EPA generally has no concern for exposures below 100% of the RfD because the RfD represents the level at or below which daily aggregate dietary exposure over a lifetime will not pose appreciable risks to human health. Rohm and Haas does not expect the aggregate exposure to exceed 100% of the RfD. Rohm and Haas concludes that there is a reasonable certainty that no harm will result to infants and children from aggregate exposure to tebufenozide, benzoic acid, 3,5-dimethyl-1-(1,1-dimethylethyl)-2-(4-ethylbenzoyl) hydrazide residues.

vii. *Short- or intermediate-term risk*. Since no short- and intermediate-term toxicological endpoints were established by EPA, no acute aggregate risk exists.

F. International Tolerances

There are currently no CODEX, Canadian or Mexican maximum residue levels (MRLs) established for tebufenozide in nut crops so no harmonization issues are required for this action.

[FR Doc. 99–16768 Filed 7–1–99; 8:45 am]

BILLING CODE 6560–50–F

FEDERAL COMMUNICATIONS COMMISSION

Notice of Public Information Collection(s) Submitted to OMB for Review and Approval

June 24, 1999

SUMMARY: The Federal Communications Commission, as part of its continuing effort to reduce paperwork burden invites the general public and other Federal agencies to take this opportunity to comment on the following information collection(s), as required by the Paperwork Reduction Act of 1995, Pub. L. 104–13. An agency may not conduct or sponsor a collection of information unless it displays a currently valid control number. No person shall be subject to any penalty for failing to comply with a collection of information subject to the Paperwork Reduction Act (PRA) that does not display a valid control number. Comments are requested concerning (a) whether the proposed collection of information is necessary for the proper performance of the functions of the Commission, including whether the information shall have practical utility; (b) the accuracy of the Commission's burden estimate; (c) ways to enhance the quality, utility, and clarity of the information collected; and (d) ways to minimize the burden of the collection of information on the respondents, including the use of automated collection techniques or other forms of information technology.

DATES: Written comments should be submitted on or before August 2, 1999. If you anticipate that you will be submitting comments, but find it difficult to do so within the period of time allowed by this notice, you should advise the contact listed below as soon as possible.

ADDRESSES: Direct all comments to Judy Boley, Federal Communications Commission, Room 1–C804, 445 12th Street, SW, Washington, DC 20554 or via the Internet to jboley@fcc.gov.

FOR FURTHER INFORMATION CONTACT: For additional information or copies of the information collection(s), contact Judy Boley at 202–418–0214 or via the Internet at jboley@fcc.gov.

SUPPLEMENTARY INFORMATION:

OMB Control Number: 3060–0686.

Title: Streamlining the International Section 214 Authorization Process and Tariff Requirements.

Form Number: N/A.

Type of Review: Revision of a currently approved collection.

Respondents: Business or other for-profit.

Number of Respondents: 1,650.

Estimated Time Per Response: 2 to 20 hours.

Frequency of Response: On occasion reporting requirement, third party disclosure requirement, quarterly, semi-annual and annual reporting requirements.

Total Annual Burden: 73,975 hours.

Total Annual Cost: $12,465,000.

Needs and Uses: The Commission amended Part 63 of its rules in the Report and Order and Order referenced in IB Docket 95–118. When the Commission sought OMB approval of the information collections contained in the *Streamlining Order*, it inadvertently omitted the information collections associated with Sections 63.19 and 63.53(c). Before revising the rules, the information requested under Section 63.19 was authorized pursuant to Section 63.15(c) and 63.17 (approved by OMB under OMB Control Number 3060–0149). The information will be used by the Commission staff in carrying out its duties under the Communications Act. In the *Streamlining Order*, the Commission clarified its notification requirements for carriers that discontinue, reduce or impair service. The Commission will require non-dominant international carriers that seek to discontinue, reduce, or impair service to a community to: (1) Notify their customers in writing sixty days in advance; (2) send a copy of this notification at least sixty days in advance of their action to the Commission. The information collection is necessary for the Commission to maintain effective oversight of U.S. carrier operations. The information will serve the public interest by providing customers with sufficient time to find another international carrier if service is discontinued by their current carrier. In addition, the *Streamlining Order* requires that applicants submitting information or documents in Section 214 proceedings by accompanied by a certified translation in English. English translations of relevant documents that

are submitted in foreign languages would save the Commission and other the time and resources needed to translate the documents. The information would eliminate the delays associated with translating the documents, and the Commission will be able to process Section 214 applications faster.

OMB Control Number: 3060–XXXX.

Title: Standard Labels for Charges Associated with Federal Regulatory Requirements/CMRS Carriers' Truth-in-Billing Requirements.

Form Number: N/A.

Type of Review: New collection.

Respondents: Business or other for-profit.

Number of Respondents: 3,099.

Estimated Time Per Response: .5 hours to 81 hours.

Frequency of Response: On occasion reporting requirement, third party disclosure requirement.

Total Annual Burden: 66,674 hours.

Total Annual Cost: N/A.

Needs and Uses: The Commission has ordered that common carrier must use standard industry-wide labels to display on telephone bills any line item charges associated with federal regulatory action. Uniform labelling will enable consumers to better understand the nature of the charges and to compare accurately the price of services offered by competing carriers. The Commission seeks public comment to determine what specific labels should be required.

In addition, the Commission seeks comment as to whether to continue an exemption from certain truth-in-billing requirements to CMRS carriers.

Federal Communications Commission.

Magalie Roman Salas,

Secretary.

[FR Doc. 99–16829 Filed 7–1–99; 8:45 am]

BILLING CODE 6712–01–P

FEDERAL COMMUNICATIONS COMMISSION

[DA 99–1103; Report No. AUC–99–26–A (Auction No. 26)]

First Paging Service Spectrum Auction Scheduled for December 7, 1999; Comment Sought on Reserve Prices or Minimum Opening Bids and Other Auction Procedural Issues

AGENCY: Communications Commission.

ACTION: Notice; seeking comment.

SUMMARY: This document seeks comment on establishing reserve prices or minimum opening bids and other procedures for the first Paging service auction. The intended effect of this document is to provide the public with an opportunity to comment on proposed auction procedures for Auction No. 26.

DATES: Comments are due on or before June 30, 1999.[1] Reply comments are due on or before July 13, 1999.

ADDRESSES: To file formally, parties must submit an original and four copies to the Office of the Secretary, Federal Communications Commission, Room TW–B204, 445 12th Street SW, Washington, DC 20554. Parties must also submit one copy to Amy Zoslov, Chief, Auctions and Industry Analysis Division, Wireless Telecommunications Bureau, Federal Communications Commission, Room 4–A760, 445 12th Street, SW, Washington, DC 20554. Comments and reply comments will be available for public inspection during regular business hours in the FCC Public Reference Room, Room CY–A257, 445 12th Street SW, Washington, DC 20554.

FOR FURTHER INFORMATION CONTACT:

Auctions Division: Lisa Hartigan, Operations, (202) 418–0660; Anne Napoli, Legal, (202) 418–0660, or Bob Reagle, Auctions Analysis, (717) 338–2801.

Commercial Wireless Division: Todd Slamowitz or Cyndi Thomas, Legal, (202) 418–0620.

SUPPLEMENTARY INFORMATION: This is a synopsis of Public Notice DA 99–1103, released on June 7, 1999. The complete text of this Public Notice, including Attachment A (Summary of Licenses to be Auctioned, Upfront Payments, Minimum Opening Bids), which does not appear in this synopsis, is available for inspection and copying Monday through Friday from 9 a.m. to 4:30 p.m., in the Commission's Public Reference Room, located at 445 12th Street, SW, Room CY–A257, Washington, DC 20554. It can also be downloaded from the Commission's Auctions web site at http://www.fcc.gov/wtb/auctions. In addition, copies may be purchased from the Commission's copy contractor, International Transcription Services, Inc. (ITS), 1231 20th Street, NW, Washington, DC 20036, (202) 857–3800.

Synopsis

1. By this Public Notice, the Wireless Telecommunications Bureau (''Bureau'') announces the first in a series of auctions of Paging service licenses, scheduled to commence on December 7, 1999. As discussed in greater detail herein, the Bureau proposes that the first Paging auction be composed of 2,499 licenses in the 929 and 931 MHz bands (the ''Upper Bands Auction''). These licenses, which are available in 51 geographic areas known as Major Economic Areas (MEAs), encompass the United States, the Northern Mariana Islands, Guam, American Samoa, the United States Virgin Islands and Puerto Rico. In this Public Notice, we seek comment on this and other procedural issues relating to the Upper Bands Auction (Auction No. 26). Future public notices will include further details regarding application filing and payment deadlines, seminars, and other pertinent information for this auction. We will seek comment separately on procedural issues relating to the auction of licenses in the 35–36 MHz, 43–44 MHz, 152–159 MHz, and 454–460 MHz bands (collectively, the ''Lower Bands Auctions'').

I. Auction Sequence and License Groupings for the Paging Service Auctions

2. In Revision of Parts 22 and 90 of the Commission's Rules to Facilitate Future Development of Paging Systems, *Memorandum Opinion and Order on Reconsideration and Third Report and Order*, FCC 99–98, 64 FR 33762, June 24, 1999 (''*Reconsideration Order*''), the Commission concluded that the upper bands licenses should be awarded in each of 51 Major Economic Areas (MEAs), and the lower bands licenses should be awarded in each of 175 Economic Areas (EAs). There are 12 channels in the 929 MHz band and 37 channels in the 931 MHz band, resulting in a total of 2,499 upper bands paging licenses. There is a significantly larger number of lower bands licenses (approaching 14,000); therefore, the Commission proposes to auction the upper bands licenses first and will seek comment on procedures and license groupings for the lower bands licenses at a later time. We seek comment on this proposal.

II. Reserve Price or Minimum Opening Bid for the Upper Bands Auction (Auction No. 26)

3. The Balanced Budget Act of 1997 calls upon the Commission to prescribe methods by which a reasonable reserve price will be required or a minimum opening bid established when FCC licenses are subject to auction (*i.e.*, because the Commission has received mutually exclusive applications for them), unless the Commission determines that a reserve price or minimum bid is not in the public interest. Consistent with this mandate, the Commission has directed the Bureau to seek comment on the use of a minimum opening bid and/or reserve

[1] **Note:** This document was received by the Office of the Federal Register on June 28, 1999.

price prior to the start of each auction. The Bureau was directed to seek comment on the methodology to be employed in establishing each of these mechanisms. Among other factors the Bureau should consider is the amount of spectrum being auctioned, levels of incumbency, the availability of technology to provide service, the size of the geographic service areas, issues of interference with other spectrum bands, and any other relevant factors that reasonably could have an impact on valuation of the spectrum being auctioned. The Commission concluded that the Bureau should have the discretion to employ either or both of these mechanisms for future auctions.

4. Normally, a reserve price is an absolute minimum price below which an item will not be sold in a given auction. Reserve prices can be either published or unpublished. A minimum opening bid, on the other hand, is the minimum bid price set at the beginning of the auction below which no bids are accepted. It is generally used to accelerate the competitive bidding process. Also, in a minimum opening bid scenario, the Bureau generally has the discretion to lower the amount later in the auction. In the event that a license is not sold in an auction, the Bureau also may lower the minimum opening bid or reserve price for that license in subsequent auctions. In anticipation of the first Paging service auction and in light of the Balanced Budget Act, the Bureau proposes to establish minimum opening bids for the Upper Bands Auction, and retain discretion to lower the minimum opening bids. The Bureau believes that the use of minimum opening bids is an effective auctions practice which has been used successfully in prior Commission auctions. A minimum opening bid, rather than a reserve price, will help to regulate the pace of the auction. Specifically, the Bureau proposes the following formula for calculating minimum opening bids on a license-by-license basis in the Upper Bands Auction (Auction No. 26): $.001 x Pops (the result rounded to the nearest hundred for levels below $10,000, and rounded to the nearest thousand for levels above $10,000), with a minimum of no less than $2,500 per license.

5. This formula is intended to apply to all geographic paging licenses in the 929 and 931 bands, and was determined based upon the considerations explained above. The specific proposed minimum opening bids for each license are set forth in Attachment A of the complete Public Notice. Comment is sought on this proposal. If commenters believe that the formula proposed above for minimum opening bids will result in substantial numbers of unsold licenses, or is not a reasonable amount, or should instead operate as a reserve price, they should explain why this is so, and comment on the desirability of an alternative approach. Commenters are advised to support their claims with valuation analyses and suggested reserve prices or minimum opening bid levels or formulas. In establishing the formula for minimum opening bids, we particularly seek comment on such factors as, among other things, the amount of spectrum being auctioned, levels of incumbency, the availability of technology to provide service, the size of the geographic service areas, issues of interference with other spectrum bands and any other relevant factors that could reasonably have an impact on valuation of the Paging service spectrum. Alternatively, comment is sought on whether, consistent with the Balanced Budget Act, the public interest would be served by having no minimum opening bid or reserve price.

III. Other Auction Procedural Issues

6. The Balanced Budget Act of 1997 requires the Commission to ''ensure that, in the scheduling of any competitive bidding * * * an adequate period is allowed * * * before issuance of bidding rules, to permit notice and comment on proposed auction procedures * * *'' Consistent with the provisions of the Balanced Budget Act and to ensure that potential bidders have adequate time to familiarize themselves with the specific provisions that will govern the day-to-day conduct of an auction, the Commission directed the Bureau, under its existing delegated authority, to seek comment of a variety of auction-specific issues prior to the start of each auction. We therefore seek comment on the following issues relating to the Upper Bands Auction (Auction No. 26).

a. Information Available to Bidders During the Course of the Auction

7. In Revision of Part 22 and Part 90 of the Commission's Rules to Facilitate Future Development of Paging Systems, *Second Report and Order and Further Notice of Proposed Rulemaking,* FCC 97–59, 62 FR 11616, March 12, 1997 (''*Second Report and Order*'') the Commission concluded that, due to the large number of licenses to be auctioned, the advantages of limiting the disclosure of information available to bidders during the course of the Paging auctions (*e.g.,* revealing only high bids and total number of bids on each license and withholding bidder identities) may help to speed the pace of the auctions. In the *Reconsideration Order,* 64 FR 33762, June 24, 1999, the Commission directed the Bureau to seek further comment on this issue. The Bureau tentatively concludes that it will be unnecessary to withhold bidder identities if the Paging licenses are auctioned in groups of approximately 2,500 or fewer licenses, as we have proposed to do with the Upper Band licenses. We seek comment on this tentative conclusion. In addition, we propose to disclose all information relating to the bids, including revealing all bids and withdrawals placed in each round, the identity of the bidder placing each bid or withdrawal, and the net and gross amounts of each bid or withdrawal during the Upper Bands Auction (Auction No. 26). We seek comment on this proposal.

b. Structure of Bidding Rounds, Activity Requirements, and Criteria for Determining Reductions in Eligibility

8. We propose to divide the Upper Bands Auction into three stages: Stage One, Stage Two and Stage Three, each characterized by increased activity requirements. The auction will start in Stage One. We propose that the auction will generally advance to the next stage (*i.e.,* from Stage One to Stage Two, and from Stage Two to Stage Three) when the auction activity level, as measured by the percentage of bidding units receiving new high bids, is below ten percent for three consecutive rounds of bidding in each Stage. However, we further propose that the Bureau retain the discretion to change stages unilaterally by announcement during the auction. In exercising this discretion, the Bureau will consider a variety of measures of bidder activity including, but not limited to, the auction activity level, the percentages of licenses (as measured in bidding units) on which there are new bids, the number of new bids, and the percentage increase in revenue. We seek comment on these proposals.

9. In order to ensure that the auction closes within a reasonable period of time, an activity rule requires bidders to bid actively on a percentage of their maximum bidding eligibility during each round of an auction rather than waiting until the end to participate. A bidder that does not satisfy the activity rule will either lose bidding eligibility in the next round or use an activity rule waiver.

10. For the Uppers Bands Auction (Auction No. 26), we propose that, in each round of Stage One of the auction, a bidder desiring to maintain its current eligibility is required to be active on licenses encompassing at least 80

percent of its current bidding eligibility. Failure to maintain the requisite activity level will result in a reduction in the bidder's bidding eligibility in the next round of bidding (unless an activity rule waiver is used). During Stage One, reduced eligibility for the next round will be calculated by multiplying the current round activity by five-fourths (5/4). In each round of the second stage of the auction, a bidder desiring to maintain its current eligibility is required to be active on at least 90 percent of its current bidding eligibility. During Stage Two, reduced eligibility for the next round will be calculated by multiplying the current round activity by ten-ninths (10/9). In each round of Stage Three, a bidder desiring to maintain its current eligibility to required to be active on 98 percent of its current bidding eligibility. In this final stage, reduced eligibility for the net round will be calculated by multiplying the current round activity by fifty forty-ninths (50/49). We seek comment on these proposals.

c. Minimum Accepted Bids

11. Once there is a standing high bid on a license, there will be a bid increment associated with that bid indicating the minimum amount by which the bid on that license can be raised. For the Upper Bands Auction (Auction No. 26), we will use a standard exponential smoothing methodology to calculate minimum bid increments, as we have done in several other auctions. The Bureau retains the discretion to change the minimum bid increment if it determines that circumstances so dictate. We seek comment on this proposal.

12. The exponential smoothing formula calculates the bid increment for each license based on a weighted average of the activity received on each license in all previous rounds. This methodology will tailor the bid increment for each license based on activity, rather than setting a global increment for all licenses. For every license that receives a bid, the bid increment for the next round for that license will be established using the exponential smoothing formula.

13. The calculation of the percentage bid increment for each license in a given round is made at the end of the previous round. The computation is based on an activity index, which is calculated as the weighted average of the activity in that round and the activity index from the prior round. The activity index at the start of the auction (round 0) will be set at 0. The current activity index is equal to a weighting factor times the number of new bids received on the license in the most recent bidding round plus one minus the weighting factor times the activity index from the prior round. The activity index is then used to calculate a percentage increment by multiplying a minimum percentage increment by one plus the activity index with that result being subject to a maximum percentage increment. The Commission will initially set the weighting factor at 0.5, the minimum percentage increment at 0.1, and the maximum percentage increment at 0.2.

Equations

$A_i=(C*B_i)+((1-C)*A_{-1})$

I_{i+1}=smaller of $((1+A_i)*N)$ and M

Where,

A_i=activity index for the current round (round i)

C=activity weight factor

B_i=number of bids in the current round (round i)

A_{i-1}=activity index from previous round (round i − 1), A_0 is 0

I_{i+1}=percentage bid increment for the next round (round i+1)

N=minimum percentage increment or bid increment floor

M=maximum percentage increment or bid increment ceiling

Under the exponential smoothing methodology, once a bid has been received on a license, the minimum acceptable bid for that license in the following round will be the new high bid plus the dollar amount associated with the percentage increment (variable I_{i+1} from above times the high bid). This result will be rounded to the nearest thousand if it is over ten thousand or to the nearest hundred if it is under ten thousand.

Examples

License 1

C=0.5, N=0.1, M=0.2

Round 1 (2 new bids, high bid=$1,000,000)

1. Calculation of percentage increment for round 2 using exponential smoothing:
   $A_1=(0.5*2)+(0.5*0)=1$
   The smaller of $I_2=(1+1)*0.1=0.2$ or 0.2 (maximum percentage increment)
2. Minimum bid increment for round 2 using the percentage increment (I_2 from above)
   0.2*$1,000,000=$200,000
3. Minimum acceptable bid for round 2=1,200,000

Round 2 (3 new bids, high bid=2,000,000)

1. Calculation of percentage increment for round 3 using exponential smoothing:
   $A_2=(0.5*3)+(0.5*1)=2$
   The smaller of $I_3=(1+2)*0.1=0.3$ or 0.2 (maximum percentage increment)

Minimum bid in increment for round 3 using the percentage increment (I_3 from above)

0.2*$2,000,000=$400,000

3. Minimum acceptable bid for round 3=2,400,000

Round 3 (1 new bid, high bid=2,400,000)

1. Calculation of percentage increment for round 4 using exponential smoothing:
   $A_3=(0.5*1)+(0.5*2)=1.5$
   The smaller of $I_4=(1+1.5)*0.1=0.25$ or 0.2 (the maximum percentage increment)
2. Minimum bid increment for round 4 using the percentage increment (I_4 from above)
   0.2* $2,400,000 = $480,000
3. Minimum acceptable bid for round 4 = 2,880,000

d. Initial Maximum Eligibility for Each Bidder

14. The Bureau has delegated authority and discretion to determine an appropriate upfront payment for each license begin auctioned, taking into account such factors as the population in each geographic license area, and the value of similar spectrum. With these guidelines in mind, we propose to calculate upfront payments for the Upper Bands Auction on a license–by–license basis, using the following formula: $.0008 * Pops (the result rounded to the nearest hundred for levels below $10,000 and to the nearest thousand for levels above $10,000) with a minimum of no less than $2,500 per license.

15. This formula is intended to apply to all geographic paging licenses in the 929 and 931 bands, and was determined based upon the considerations explained above. We seek comment on this proposal.

16. We further propose that the amount of the upfront payment submitted by a bidder will determine the initial maximum eligibility (as measured in bidding units) for each bidder. Upfront payments will not be attributed to specific licenses, but instead will be translated into bidding units to define a bidder's initial maximum eligibility, which will define licenses on which bids may be placed. Eligibility cannot be increased during the auction. It is important that in calculating the upfront payment amount, an applicant determine the *maximum* number of bidding units it may wish to bid on (and/or hold high bids on) in any single round, and submit an upfront payment covering that number of bidding units. We seek comment on this proposal.

e. Activity Rule Waivers and Reducing Eligibility

17. Use of an activity rule waiver preserves the bidder's current bidding eligibility despite the bidder's activity in the current round begin below the required minimum level. An activity rule waiver applies to an entire round of bidding and not to a particular license. Activity waivers are principally a mechanism for auction participants to avoid the loss of auction eligibility in the event that exigent circumstances prevent them from placing a bid in a particular round.

18. The FCC auction system assumes that bidders with insufficient activity would prefer to use an activity rule waiver (if available) rather than lose bidding eligibility. Therefore, the system will automatically apply a waiver (known as an ''automatic waiver'') at the end of any bidding period where a bidder's activity level is below the minimum required unless: (1) There are no activity rule waivers available; or (2) the bidder overrides the automatic application of a waiver by reducing eligibility thereby meeting the minimum requirements.

19. A bidder with insufficient activity that wants to reduce its bidding eligibility rather than use an activity rule waiver must affirmatively override the automatic waiver mechanism during the bidding period by using the reduce eligibility function in the software. In this case, the bidder's eligibility is permanently reduced to bring the bidder into compliance with the activity rules as described above. Once eligibility has been reduced, a bidder will not be permitted to regain its lost bidding eligibility.

20. A bidder may proactively use an activity rule waiver as a means to keep an auction open without placing a bid. If a bidder submits a proactive waiver (using the proactive waiver function in the bidding software) during a bidding period in which no bids are submitted, the auction will remain open and the bidder's eligibility will be preserved. An automatic waiver invoked in a round in which there are no new valid bids will not keep the auction open.

21. We propose that each bidder in the Upper Bands Auction (Auction No. 26) will be provided with five activity rule waivers that may be used in any round during the course of an auction as set forth above. We seek comment on this proposal.

f. Information Regarding Bid Withdrawal and Bid Removed

22. For the Upper Bands Auction (Auction No. 26), we propose the following bid removal and bid withdrawal procedures. Before the close of a bidding period, a bidder has the option of removing any bids submitted in that round. By using the remove bid function in the software, a bidder may effectively ''unsubmit'' any bid placed within that round. A bidder removing a bid placed in the same round is not subject to withdrawal payments.

23. Once a round closes, a bidder may no longer remove a bid. However, in any subsequent round, a high bidder may withdraw its standing high bids from previous rounds using the withdraw bid function. A high bidder that withdraws its standing high bid from a previous round is subject to the bid withdrawal payment provisions. We seek comment on these bid removal and bid withdrawal procedures.

24. In Amendment of Part 1 of the Commission's Rules—Competitive Bidding Procedures, *Third Report and Order and Second Further Notice of Proposed Rulemaking,* FCC 97–413, 63 FR 2315, January 15, 1998 (''*Part 1 Third Report and Order*''), the Commission explained that allowing bid withdrawals facilitates efficient aggregation of licenses and the pursuit of efficient backup strategies as information becomes available during the course of an auction. The Commission noted, however, that in some instances bidders may seek to withdraw bids for improper reasons, including to delay the close of an auction for strategic purposes. The Bureau, therefore, has discretion, in managing the auction, to limit the number of withdrawals to prevent strategic delay of the close of the auction or other abuses. The Commission stated that the Bureau should assertively exercise its discretion, consider limiting the number of rounds in which bidders may withdraw bids, and prevent bidders from bidding on a particular market if the Bureau finds that a bidder is abusing the Commission's bid withdrawal procedures.

25. Applying this reasoning, we propose to limit each bidder in the Upper Bands Auction (Auction No. 26) to withdrawals in no more than two rounds during the course of each auction. To permit a bidder to withdraw bids in more than two rounds would likely encourage insincere bidding or the use of withdrawals for anti-competitive strategic purposes. The two rounds in which withdrawals are utilized will be at the bidder's discretion; withdrawals otherwise must be in accordance with the Commission's rules. There is no limit on the number of standing high bids that may be withdrawn in either of the rounds in which withdrawals are utilized. Withdrawals will remain subject to the bid withdrawal payment provisions specified in the Commission's rules. We seek comment on this proposal.

g. Stopping Rule

26. In the *Reconsideration Order,* 64 FR 33762, June 24, 1999, the Commission upheld the hybrid simultaneous/license-by-license stopping rule that had been adopted for the paging auctions in the *Second Report and Order,* 62 FR 11616, March 12, 1997, but retained discretion for the Bureau to use another stopping rule after seeking further comment on this issue in the pre-auction process. The Bureau concludes that our proposal to conduct a series of auctions may eliminate the risk of unnecessarily protracted auctions, and likewise, the need for a hybrid stopping rule.

27. Therefore, for the Upper Bands Auction (Auction No. 26), the Bureau proposes to employ a simultaneous stopping approach. The Bureau has discretion to establish stopping rules before or during multiple round auctions in order to terminate the auction within a reasonable time. A simultaneous stopping rule means that all licenses remain open until the first round in which no new acceptable bids, proactive waivers, or withdrawals are received. After the first such round, bidding close simultaneously on all licenses. Thus, unless circumstances dictate otherwise, bidding would remain open on all licenses until bidding stops on every license.

28. We also seek comment on a modified version of the simultaneous stopping rule. The modified version of the stopping rule would close the auction for all licenses after the first round in which no bidder submits a proactive waiver, a withdrawal, or a new bid on any license on which it is not the standing high bidder. Thus, absent any other bidding activity, a bidder placing a new bid on a license for which it is the standing high bidder would not keep the auction open under this modified stopping rule. The Bureau further seeks comment on whether this modified stopping rule should be used unilaterally or only in stage of the auction.

29. In addition, we propose that the Bureau retain the discretion to keep an auction open even if no new acceptable bids or proactive waivers are submitted and no previous high bids are withdrawn. In this event, the effect will be the same as if a bidder had submitted a proactive waiver. The activity rule, therefore, will apply as usual; and a

bidder with insufficient activity will either lose bidding eligibility or use a remaining activity rule waiver. We seek comment on this proposal.

30. Finally, we propose that the Bureau reserve the right to declare that the auction will end after a specified number of additional rounds (''special stopping rule''). If the Bureau invokes this special rule, it will accept bids in the final round(s) only for licenses on which the high bid increased in at least one of the preceding specified number of rounds. The Bureau proposes to exercise this option only in certain circumstances, such as, for example, where the auction is proceeding very slowly, there is minimal overall bidding activity, or it appears likely that the auction will not close within a reasonable period of time. Before exercising this option, the Bureau is likely to attempt to increase the pace of the auction by, for example, moving the auction into the next stage (where bidders would be required to maintain a higher level of bidding activity), increasing the number of bidding rounds per day, and/or increasing the amount of the minimum bid increments for the limited number of licenses where there is still a high level of bidding activity. We seek comment on these proposals.

h. Information Relating to Auction Delay, Suspension or Cancellation

31. For the Upper Bands Auction (Auction No. 26), we propose that, by public notice or by announcement during the auction, the Bureau may delay, suspend or cancel any auction in the event of natural disaster, technical obstacle, evidence of an auction security breach, unlawful bidding activity, administrative or weather necessity, or for any other reason that affects the fair and competitive conduct of competitive bidding. In such cases, the Bureau, in its sole discretion, may elect to: resume the auction starting from the beginning of the current round; resume the auction starting from some previous round; or cancel the auction in its entirety. Network interruption may cause the Bureau to delay or suspend an auction. We emphasize that exercise of this authority is solely within the discretion of the Bureau, and its use is not intended to be a substitute for situations in which bidders may wish to apply their activity rule waivers. We seek comment on hits proposal.

Federal Communications Commission.

Magalie Roman Salas,

Secretary.

[FR Doc. 99–16762 Filed 7–1–99; 8:45 am]

BILLING CODE 6712–01–M

FEDERAL COMMUNICATIONS COMMISSION

[Gen. Docket No. 90–119; DA–99–659]

Private Land Mobile Radio Service, Florida Area Public Safety Plan

AGENCY: Federal Communications Commission.

ACTION: Notice.

SUMMARY: The Wireless Telecommunications Bureau released this Public Notice amending the Florida Area Public Safety Regional Plan (Region 9 Plan). This action revises the current channel allotments for radio frequencies in the 821–824/866–869 MHz bands within the Florida area. In accordance with the National Public Safety Plan, each region is responsible for planning its use of public safety radio frequency spectrum in the 821–824/866–869 MHz bands.

FOR FURTHER INFORMATION CONTACT: Ghassan Khalek, Federal Communications Commission, Washington, DC, (202) 418–2771.

SUPPLEMENTARY INFORMATION: The full text of the Public Notice is as follows: By this Public Notice, the Commission announces that the Florida Area (Region 9) Radio Planning Committee's proposal to amend the Region 9 Public Safety Regional Plan is approved. The amendment, which revises the current channel allotments for radio frequencies in the 821–824/866–869 MHz bands within the Florida area, reflects changes made as a result of its fourth window application process. In accordance with the National Public Safety Plan, each region is responsible for planning its use of public safety radio frequency spectrum in the 821–824/866–869 MHz bands.[1] The Region 9 Plan was originally adopted by the Commission on May 10, 1990.[2]

On December 28, 1998, the Commission issued a Public Notice (Report No. WT 98–46) inviting interested parties to file comments regarding a proposed amendment to the Region 9 Plan that was filed with the Commission on December 9, 1998. We have reviewed the Region 9 request. The amendment is a minor change to the Region 9 Plan. Further, we have received no comments in response to the Public Notice of December 28, 1998, referenced above. The amendment, is therefore, accepted and approved as submitted. The Secretary's office will place the amended Region 9 Plan in the official docket file where it will remain available to the public. Questions regarding this public notice may be directed to Ghassan Khalek, Wireless Telecommunications Bureau (202) 418–2771.

Federal Communications Commission.

Ramona E. Melson,

Acting Chief, Public Safety and Private Wireless Division, Wireless Telecommunications Bureau.

[FR Doc. 99–16830 Filed 7–1–99; 8:45 am]

BILLING CODE 6712–01–P

[1] Report and Order, General Docket No. 87–112, 53 FR 01022, 02/15/98, 3 FCC Rcd 905 (1987).

[2] Order, General Docket 90–119, 5 FCC Rcd 3067 (1990). The Region 9 Plan was subsequently revised on May 7, 1991, 6 FCC Rcd 2607 (1991), November 25, 1991, 56 FR 65258, 12/16/91, 6 FCC Rcd 7180 (1991), September 17, 1993, 58 FR 51347, 10/01/93, 8 FCC Rcd 7038 (1993), March 23, 1994, 59 FR 16209, 04/06/94, 9 FCC Rcd 1644 (1994), June 19, 1995, 60 FR 34247 06/30/95, 10 FCC Rcd 7167 (1995) and September 9, 1997, (Report No. WT 97–34).

FEDERAL COMMUNICATIONS COMMISSION

[CS Docket No. 99–230, FCC 99–148]

Annual Assessment of the Status of Competition in Markets for the Delivery of Video Programming

AGENCY: Federal Communications Commission.

ACTION: Notice of inquiry.

SUMMARY: The Commission is required to report annually to Congress on the status of competition in markets for the delivery of video programming. On June 18, 1999, the Commission adopted a *Notice of Inquiry* to solicit information from the public for use in preparing the competition report that is to be submitted to Congress in December 1999. The *Notice of Inquiry* will provide parties with an opportunity to submit comments and information to be used in conjunction with publicly available information and filings submitted in relevant Commission proceedings to assess the extent of competition in the market for the delivery of video programming.

DATES: Comments are due by August 6, 1999, and reply comments are due by September 1, 1999.

ADDRESSES: Office of the Secretary, Federal Communications Commission, 445 12th Street, SW, Washington, DC 20554.

FOR FURTHER INFORMATION CONTACT: Marcia Glauberman, Cable Services Bureau, (202) 418–7200 or TTY (202) 418–7172.

SUPPLEMENTARY INFORMATION: This is a synopsis of the Commission's *Notice of Inquiry* in CS Docket No. 99–230, FCC 99–148, adopted June 18, 1999, and released June 23, 1999. The complete

text of this *Notice of Inquiry* is available for inspection and copying during normal business hours in the FCC Reference Center, 445 12th Street, S.W., Washington, D.C., 20554, and may also be purchased from the Commission's copy contractor, International Transcription Service (''ITS, Inc.''), (202) 857–3800, 1231 20th Street, N.W., Washington, D.C. 20036.

Synopsis of the Notice of Inquiry

1. Section 628(g) of the Communications Act of 1934, as amended (''Communications Act''), 47 U.S.C. 548(g), requires the Commission to deliver an annual report to Congress on the status of competition in markets for the delivery of video programming. The *Notice of Inquiry* (''*NOI*'') is designed to assist the Commission in gathering the information, data, and public comment necessary to prepare its sixth annual report on competition in markets for the delivery of video programming (''1999 Competition Report''). The Commission expects to use the information submitted by commenters to supplement publicly available information and relevant comments that have been filed in other Commission proceedings.

2. For the 1999 Competition Report, we request information and comment regarding the cable industry, existing and potential competitors in markets for the delivery of video programming, and the prospects for increasing competition in these markets. We seek information to update our assessment of the status of competition and on changes in the competitive environment since our *1998 Competition Report* was submitted to Congress. For this year's report, to the extent feasible, we ask parties to submit data and information that are current as of June 30, 1999. We also note that the information gathered in this report will present the first comprehensive picture of the state of competition in the video marketplace following the deregulation of rates for cable programming service tiers (''CPSTs'') on March 31, 1999.

3. Markets for the delivery of video programming are served by video distributors using both wired and wireless technologies. Video distributors include multichannel video programming distributors (''MVPDs''), such as cable systems, direct broadcast satellite (''DBS'') service, and home satellite dish (''HSD'') service, private cable or satellite master antenna television (''SMATV'') systems, open video systems (''OVS''), multichannel multipoint distribution service (''MMDS''), and instructional television fixed service (''ITFS''), as well as over-the-air broadcast television service.

4. Congress and the Commission have sought to eliminate barriers to competitive entry and establish market conditions that promote competition to foster more and better options for consumers at reasonable prices. For the 1999 Competition Report, we seek information and comment that will allow us to evaluate the status of competition in the video marketplace, its effect on the cable television industry, and prospects for increased competition. We are interested in evaluating the extent that consumers have choices among video programming distributors and delivery technologies and in comparing the various video distribution alternatives available to consumers in terms of video programming offerings, prices for programming services and associated equipment, and other services provided (*e.g.*, telephony, data access). We invite comment on the effect of recent statutory and regulatory changes on competition for the delivery of video services. We request information regarding existing or potential regulatory impediments that may deter entry or prevent expansion of competitive opportunities in video program delivery markets, including specific Commission rules, policies, or regulations that ought to be reexamined.

5. In recent *Competition Reports*, we presented case studies of local markets where cable operators faced actual competition from MVPD entrants. This year, we request information on the effects of actual and potential competition in these and other local markets where consumers have, or soon will have, a choice among MVPDs. In particular, we seek updated information on MVPD services in those areas included in our previous case studies to determine whether the initial effects of competition continue. We also ask commenters to provide specific data regarding other areas where head-to-head competition exists, or is expected to exist in the near future, between cable and other MVPDs, or among various types of MVPDs. We further request information about how competition has affected prices, service offerings, quality of service, and other relevant factors.

6. In addition to analyzing case studies, in the 1999 Competition Report, we want to present a broader picture of the current state of competition on a local, regional, and national basis. We ask commenters to assist us in this assessment of competitive alternatives available to consumers by providing detailed information on the types of competitive alternatives available, comparisons of the video and nonvideo services offered, and the prices charged for these service and associated equipment. We seek data on the number of television households that can choose between two, three, four, or more video programming distribution services and other information including: (a) The identity of the competitors; (b) the distribution technology used by each competitor; (c) the date that each competitor entered the market; (d) the location of the market, including whether it is predominantly urban or rural; (e) an estimate of the subscribership and market share for the services of each competitor; (f) a description of the service offerings of each competitor; (g) differentiation strategies each competitor is pursuing; and (h) the prices charged for the service offerings.

7. In the *1997 and 1998 Competition Reports*, we considered multiple dwelling units (''MDUs'') a separate submarket. For the 1999 Competition Report, we would like to update our information on video delivery competition for and within MDUs. We request information regarding the choices that consumers have among MVPD services within a particular MDU, comparisons of the program offerings and prices charged by competing MVPDs serving an MDU, and comparisons of the program offerings and prices charged by MVPDs serving MDUs and competing MVPDs serving the same geographic area.

8. As in previous reports, we seek factual information and statistical data regarding the status of video programming distributors using different technologies, and changes that have occurred in the past year. In addition to statistical data on each of these delivery services, we seek information regarding: (a) The number of homes passed (for wired technologies) and the number of homes capable of receiving service (for wireless technologies); (b) the number of operators; (c) the identities of the ten largest operators (national market only); (d) the number of subscribers and penetration rates; (e) channel capacities and the number and types of channels offered; and (f) the number and types of services offered. In addition, we request financial information for each technology, including firm and industry revenues, in the aggregate and by sources (*e.g.*, subscriber revenues, advertising revenues, programming revenues); cash flow; changes in stock prices; investments; capital acquisition; and capital expenditures.

9. For each video programming distribution technology, we also request information describing: (a) Technological advances (*e.g.*,

deployment of digital services) that make or may make the technology competitive; (b) the effort (including steps, costs and time) needed to increase the number of homes passed or capable of receiving service; (c) the effort (including steps, costs and time) needed to increase the number of channels and types of services offered; and (d) regulatory and judicial developments that affect the use of different technologies. In addition, in evaluating the extent of competition among various MVPDs' services or technologies, we seek information and analysis on the degree to which viewers or consumers consider the different types of MVPDs to be substitutes and on the extent to which customers have switched from one provider or technology to another one.

10. As in prior reports, we will provide updated information in the 1999 Competition Report on the structure of, and rivalry in, markets for the delivery of video programming. We intend to evaluate MVPD market concentration as we have done previously and, thus, seek data regarding current national subscribership levels of all MVPDs, whether these levels have changed since the *1998 Competition Report*, and, if so, how significantly. To the extent national concentration has increased or decreased for specific MVPDs, we ask commenters to discuss the reasons for such changes, including whether such changes are the results of merger and acquisition activity, marketing strategies, or other factors. We request data that will allow us to report on cable industry transactions, including information on mergers, acquisitions, consolidations, swaps and trades, cross-ownership, and other structural developments that affect distributors' delivery of video programming. We further request information regarding transactions involving noncable MVPDs that might affect competition in the video marketplace.

11. With respect to regional concentration (i.e., ''clustering''), for cable and other MVPDs, we seek information on the geographic areas served by particular companies and comment regarding the effects industry consolidation and clustering have had on competition. We also ask commenters to discuss whether clustering has facilitated MVPDs' ability to provide increased or improved services, such as additional video and nonvideo services, lower prices, or better customer service.

12. In the 1999 Competition Report, we will update information on existing and planned programming services, with particular focus on those programming services that are affiliated with video programming distributors. We seek information and ask a variety of questions on programming services that are affiliated with cable operators, affiliated with non-cable video programming distributors and unaffiliated with any MVPD.

13. We also request information on the various program options offered by each MVPD technology, including exclusive program offerings, the number of channels available, and the comparability of the program options and packages available with each technology. We request data on the extent to which there are programming networks affiliated with noncable MVPDs and whether such programming networks are available to competing MVPDs. We ask whether there are certain programming services or specific classes of service that an MVPD needs to provide to subscribers in order to be successful. Further, we solicit information regarding increases in programming cost over the last year.

14. We are interested in how MVPDs package their programming, particularly the extent to which they offer discrete programming choices (i.e., service on an ''a la carte'' or individual channel basis) rather than programming service packages (i.e., tiers of programming services). We ask whether MVPDs offer ''mini-tiers,'' ''lifeline'' basic tiers, or digital tiers and what are the technical, economic, legal, or other considerations related to offering customized programming packages. In addition, we ask whether MVPDs are offering video and nonvideo services together (i.e., bundled services) and how such combined services are offered and priced. We further solicit a variety of information regarding: (a) Local and regional channels; (b) public, educational, and governmental (''PEG'') access channels; (c) leased access channels; (d) DBS channels used for ''noncommercial programming of an educational or informational nature;'' and (e) electronic programming guides (''EPGs'') offered by cable operators and other MVPDs.

15. As in previous reports, we will continue to report on the effectiveness of our program access, program carriage, and channel occupancy rules that govern the relationships between cable operators and programming providers. We request comment on each of these rules, especially whether the coverage of the program access rules is appropriate and on any other issues of concern to video programming providers or MVPDs relating to the availability and distribution of programming.

16. In the *1998 Competition Report*, we addressed the deployment of digital technology and discussed recent activities to promote the commercial availability of the equipment used to access video programming and other services pursuant to the requirements of the Telecommunications Act of 1996. For this year's report, we seek updated information on system upgrades, particularly with respect to digital technology. We request information regarding multiple system operators (''MSOs'') that have created digital tiers and the types of programming offered on these tiers. We seek similar information on upgrades and the deployment of advanced technologies to provide digital programming and other advanced services by MVPDs other than cable operators. We also request information on the feasibility and use of combined distribution technologies (e.g., DBS and SMATV). Moreover, we are interested in what role, if any, the ability to provide advanced services plays in attracting subscribers to video programming services and contributing to the competitiveness of an MVPD.

17. Another important aspect of technological development is the deployment of set-top boxes, integrated receiver/decoders, or receivers that facilitate or differentiate MVPD service offering. In this year's report, we plan to update the information provided in the *1998 Competition Report* regarding the certification of set-top boxes, including updated information on the progress of Cable Television Laboratories, Inc.'s OpenCable'' process, and the availability of set-top boxes through retail outlets.

18. In last year's report, we also observed that the cable industry had begun the widespread deployment of cable modems and that CableLabs was in the process of finalizing its Data Over Cable Service Interface Specification (''DOCSIS'') intended to provide manufacturers with a set of standards that will enable the production of interoperable cable modems. We seek information regarding the availability DOCSIS compliant modems and the extent to which consumers are buying rather than leasing modems.

Administrative Matters

Ex Parte

19. There are no *ex parte* or disclosure requirements applicable to this proceeding pursuant to 47 CFR 1.1204(b)(1).

Comment Dates

20. Pursuant to applicable procedures set forth in 47 CFR 1.415 and 1.419,

interested parties may file comments on or before August 6, 1999, and reply comments on or before September 1, 1999. Comments may be filed using the Commission's Electronic Comment Filing System (ECFS) or by filing paper copies. See *Electronic filing of Documents in Rulemaking Proceedings,* 63 FR 24,121 (1998).

21. Comments filed through the ECFS can be sent as an electronic file via the Internet to <http://www.fcc.gov/e-file/ecfs.html>. Generally, only one copy of an electronic submission must be files. If multiple docket or rulemaking numbers appear in the caption of this proceeding, however, commenters must transmit one electronic copy of the comments to each docket or rulemaking number referenced in the caption. In completing the transmittal screen, commenters should include their full name, Postal Service mailing address, and the applicable docket or rulemaking number. Parties may also submit an electronic comment by Internet e-mail. To get filing instructions for e-mail comments, commenters should send an e-mail to ecfs@fcc.gov, and should include the following words in the body of the message, ''get form <your e-mail address.'' A sample form and directions will be sent in reply.

22. Parties who choose to file by paper must file an original and four copies of each filing. If participants want each Commissioner to receive a personal copy of their comments, an original plus nine copies must be filed. If more than one docket or rulemaking number appear in the caption of this proceeding commenters must submit two additional copies for each additional docket or rulemaking number. All filings must be sent to the Commission's Secretary, Magalie Roman Salas, Office of the Secretary, Federal Communications Commission, 445 12th Street, SW, Washington DC 20554. The Cable Services Bureau contact for this proceeding is Marcia Glauberman at (202) 418–7200, TTY (202) 418–7172, or at mglauber@fcc.gov.

23. Parties who choose to file by paper should also submit their comments on diskette. These diskettes should be submitted to Marcia Glauberman, 445 12th Street, SW, Room 3–A738, Washington, DC 20554. Such a submission should be on 3.5 inch diskette formatted in an IBM compatible format using WordPerfect 5.1 for Windows or compatible software. The diskette should be accompanied by a cover letter and should be submitted in ''read only'' mode. The diskette should be clearly labelled with the commenter's name, proceeding (including the lead docket number in this case [CS Docket No. 99–230]), type of pleading (comment or reply comment), date of submission and the name of the electronic file on the diskette. The label should also include the following phrase ''Disk Copy—Not an Original.'' Each diskette should contain only one party's pleadings, preferable in a single electronic file. In addition commenters must send diskette copies to the Commission's copy contractor, International Transcription Service, Inc., 1231 20th Street, NW, Washington, DC 20036.

Ordering Clause

24. This *Notice* is issued pursuant to authority contained in Sections 4(i), 4(j), 403, and 628(g) of the Communications Act of 1934, as amended.

Federal Communications Commission.

Magalie Roman Salas,

Secretary.

[FR Doc. 99–16832 Filed 7–1–99; 8:45 am]

BILLING CODE 6712–01–P

FEDERAL DEPOSIT INSURANCE CORPORATION

Sunshine Act Meeting

Pursuant to the provisions of the ''Government in the Sunshine Act'' (5 U.S.C. 552b), notice is hereby given that at 10:03 a.m. on Tuesday, June 29, 1999, the Board of Directors of the Federal Deposit Insurance Corporation met in closed session to consider (1) matters relating to the Corporation's corporate and resolution activities, (2) matters relating to an administrative enforcement proceeding, and (3) reports from the Office of Inspector General.

In calling the meeting, the Board determined, on motion of Vice Chairman Andrew C. Hove, Jr., seconded by Director Ellen S. Seidman (Director, Office of Thrift Supervision), concurred in by Ms. Julie L. Williams, acting in the place and stead of Director John D. Hawke, Jr. (Comptroller of the Currency), and Chairman Donna Tanoue, that Corporation business required its consideration of the matters on less than seven days' notice to the public; that no earlier notice of the meeting was practicable; that the public interest did not require consideration of the matters in a meeting open to public observation; and that the matters could be considered in a closed meeting by authority of subsections (c)(2), (c)(6), (c)(8), (c)(9)(A)(ii), and (c)(9)(B) of the ''Government in the Sunshine Act'' (5 U.S.C. 552b(c)(2), (c)(6), (c)(8), (c)(9)(A)(ii), and (c)(9)(B)).

The meeting was held in the Board Room of the FDIC Building located at 550–17th Street, N.W., Washington, D.C.

Federal Deposit Insurance Corporation.

Dated: June 29, 1999.

Valerie J. Best,

Assistant Executive Secretary.

[FR Doc. 99–16954 Filed 6–29–99; 4:01 pm]

BILLING CODE 6714–01–M

FEDERAL RESERVE SYSTEM

Change in Bank Control Notices; Acquisitions of Shares of Banks or Bank Holding Companies

The notificants listed below have applied under the Change in Bank Control Act (12 U.S.C. 1817(j)) and § 225.41 of the Board's Regulation Y (12 CFR 225.41) to acquire a bank or bank holding company. The factors that are considered in acting on the notices are set forth in paragraph 7 of the Act (12 U.S.C. 1817(j)(7)).

The notices are available for immediate inspection at the Federal Reserve Bank indicated. The notices also will be available for inspection at the offices of the Board of Governors. Interested persons may express their views in writing to the Reserve Bank indicated for that notice or to the offices of the Board of Governors. Comments must be received not later than July 16, 1999.

A. Federal Reserve Bank of Minneapolis (JoAnne F. Lewellen, Assistant Vice President) 90 Hennepin Avenue, P.O. Box 291, Minneapolis, Minnesota 55480-0291:

1. Brian Lee Houkom, Devils Lake, North Dakota; to acquire voting shares of Western State Agency, Inc., Devils Lake, North Dakota, and thereby indirectly acquire voting shares of Western State Bank, Devils Lake, North Dakota.

Board of Governors of the Federal Reserve System, June 28, 1999.

Robert deV. Frierson,

Associate Secretary of the Board.

[FR Doc. 99–16858 Filed 7–1–99; 8:45 am]

BILLING CODE 6210–01–F

FEDERAL RESERVE SYSTEM

Formations of, Acquisitions by, and Mergers of Bank Holding Companies

The companies listed in this notice have applied to the Board for approval, pursuant to the Bank Holding Company Act of 1956 (12 U.S.C. 1841 *et seq.*) (BHC Act), Regulation Y (12 CFR Part 225), and all other applicable statutes

and regulations to become a bank holding company and/or to acquire the assets or the ownership of, control of, or the power to vote shares of a bank or bank holding company and all of the banks and nonbanking companies owned by the bank holding company, including the companies listed below.

The applications listed below, as well as other related filings required by the Board, are available for immediate inspection at the Federal Reserve Bank indicated. The application also will be available for inspection at the offices of the Board of Governors. Interested persons may express their views in writing on the standards enumerated in the BHC Act (12 U.S.C. 1842(c)). If the proposal also involves the acquisition of a nonbanking company, the review also includes whether the acquisition of the nonbanking company complies with the standards in section 4 of the BHC Act (12 U.S.C. 1843). Unless otherwise noted, nonbanking activities will be conducted throughout the United States.

Unless otherwise noted, comments regarding each of these applications must be received at the Reserve Bank indicated or the offices of the Board of Governors not later than July 26, 1999.

A. Federal Reserve Bank of New York (Betsy Buttrill White, Senior Vice President) 33 Liberty Street, New York, New York 10045-0001:

1. Rome, MHC, Rome, New York; to become a bank holding company by acquiring 51 percent of the voting shares of Rome Bancorp, Inc., Rome, New York, and thereby indirectly acquire The Rome Savings Bank, Rome, New York.

B. Federal Reserve Bank of Kansas City (D. Michael Manies, Assistant Vice President) 925 Grand Avenue, Kansas City, Missouri 64198-0001:

1. First Flo Corporation, Florence, Colorado; to acquire 100 percent of the voting shares of FAM Financial Services, Macksville, Kansas, and thereby indirectly acquire The Farmers and Merchants State Bank, Macksville, Kansas.

2. Rae Valley Financials, Inc., Petersburg, Nebraska; to become a bank holding company by acquiring 100 percent of the voting shares of Petersburg State Bank, Petersburg, Nebraska.

C. Federal Reserve Bank of Dallas (W. Arthur Tribble, Vice President) 2200 North Pearl Street, Dallas, Texas 75201-2272:

1. Texas Regional Bancshares, Inc., McAllen, Texas, and Texas Regional Delaware, Inc., Wilmington, Delaware; to merge with Harlingen Bancshares, Inc., Harlingen, Texas, and thereby indirectly acquire H N Bancshares of Delaware, Inc., Harlingen, Texas, and Harlingen National Bank, Harlingen, Texas.

Board of Governors of the Federal Reserve System, June 28, 1999.

Robert deV. Frierson,

Associate Secretary of the Board.

[FR Doc. 99–16859 Filed 7–1–99; 8:45 am]

BILLING CODE 6210–01–F

FEDERAL RESERVE SYSTEM

Formations of, Acquisitions by, and Mergers of Bank Holding Companies

The companies listed in this notice have applied to the Board for approval, pursuant to the Bank Holding Company Act of 1956 (12 U.S.C. 1841 *et seq.*) (BHC Act), Regulation Y (12 CFR Part 225), and all other applicable statutes and regulations to become a bank holding company and/or to acquire the assets or the ownership of, control of, or the power to vote shares of a bank or bank holding company and all of the banks and nonbanking companies owned by the bank holding company, including the companies listed below.

The applications listed below, as well as other related filings required by the Board, are available for immediate inspection at the Federal Reserve Bank indicated. The application also will be available for inspection at the offices of the Board of Governors. Interested persons may express their views in writing on the standards enumerated in the BHC Act (12 U.S.C. 1842(c)). If the proposal also involves the acquisition of a nonbanking company, the review also includes whether the acquisition of the nonbanking company complies with the standards in section 4 of the BHC Act (12 U.S.C. 1843). Unless otherwise noted, nonbanking activities will be conducted throughout the United States.

Unless otherwise noted, comments regarding each of these applications must be received at the Reserve Bank indicated or the offices of the Board of Governors not later than July 30, 1999.

A. Federal Reserve Bank of Chicago (Philip Jackson, Applications Officer) 230 South LaSalle Street, Chicago, Illinois 60690-1413:

1. American Heartland Bancshares, Inc., Sugar Grove, Illinois; to become a bank holding company by acquiring 100 percent of the voting shares of American Heartland Bank and Trust, Sugar Grove, Illinois.

Board of Governors of the Federal Reserve System, June 29, 1999.

Robert deV. Frierson,

Associate Secretary of the Board.

[FR Doc. 99–16917 Filed 7–1–99; 8:45 am]

BILLING CODE 6210–01–F

FEDERAL RESERVE SYSTEM

Notice of Proposals to Engage in Permissible Nonbanking Activities or to Acquire Companies that are Engaged in Permissible Nonbanking Activities

The companies listed in this notice have given notice under section 4 of the Bank Holding Company Act (12 U.S.C. 1843) (BHC Act) and Regulation Y, (12 CFR Part 225) to engage *de novo*, or to acquire or control voting securities or assets of a company, including the companies listed below, that engages either directly or through a subsidiary or other company, in a nonbanking activity that is listed in § 225.28 of Regulation Y (12 CFR 225.28) or that the Board has determined by Order to be closely related to banking and permissible for bank holding companies. Unless otherwise noted, these activities will be conducted throughout the United States.

Each notice is available for inspection at the Federal Reserve Bank indicated. The notice also will be available for inspection at the offices of the Board of Governors. Interested persons may express their views in writing on the question whether the proposal complies with the standards of section 4 of the BHC Act.

Unless otherwise noted, comments regarding the applications must be received at the Reserve Bank indicated or the offices of the Board of Governors not later than July 16, 1999.

A. Federal Reserve Bank of Minneapolis (JoAnne F. Lewellen, Assistant Vice President) 90 Hennepin Avenue, P.O. Box 291, Minneapolis, Minnesota 55480-0291:

1. Western State Agency, Inc., Devils Lake, North Dakota; to retain voting shares of Western State Insurance Agency, Inc., Devils Lake, North Dakota, and Towner Insurance Agency, Towner, North Dakota, and thereby engage in general insurance agency activities in a place with a population not exceeding 5,000, pursuant to § 225.28(b)(11)(iii)(A) of Regulation Y.

Board of Governors of the Federal Reserve System, June 28, 1999.

Robert deV. Frierson,

Associate Secretary of the Board.

[FR Doc. 99–16860 Filed 7–1–99; 8:45 am]

BILLING CODE 6210–01–F

FEDERAL RESERVE SYSTEM

Notice of Proposals to Engage in Permissible Nonbanking Activities or to Acquire Companies that are Engaged in Permissible Nonbanking Activities

The companies listed in this notice have given notice under section 4 of the Bank Holding Company Act (12 U.S.C. 1843) (BHC Act) and Regulation Y, (12 CFR Part 225) to engage *de novo*, or to acquire or control voting securities or assets of a company, including the companies listed below, that engages either directly or through a subsidiary or other company, in a nonbanking activity that is listed in § 225.28 of Regulation Y (12 CFR 225.28) or that the Board has determined by Order to be closely related to banking and permissible for bank holding companies. Unless otherwise noted, these activities will be conducted throughout the United States.

Each notice is available for inspection at the Federal Reserve Bank indicated. The notice also will be available for inspection at the offices of the Board of Governors. Interested persons may express their views in writing on the question whether the proposal complies with the standards of section 4 of the BHC Act.

Unless otherwise noted, comments regarding the applications must be received at the Reserve Bank indicated or the offices of the Board of Governors not later than July 19, 1999.

A. Federal Reserve Bank of New York (Betsy Buttrill White, Senior Vice President) 33 Liberty Street, New York, New York 10045-0001:

1. HSBC Holdings PLC, London, England; HSBC Finance (Netherlands) Limited, London, England; HSBC Holdings BV, Amsterdam, The Netherlands, to engage *de novo* through HSBC Asset Management Americas Inc., New York, New York, in providing financial and investment advisory services, pursuant to § 225.28(b)(6) of Regulation Y; providing securities brokerage, riskless principal, private placement, futures commission merchant, and other agency transactional services for customers, pursuant to § 225.28(b)(7) of Regulation Y, and acting as an investment advisor and general partner for private investment limited partnerships that invest in assets in which a bank holding company is permitted to invest, see, *Dresdner Bank AG*, 84 Fed. reg. Bull. 361 (1998); *Cooperatieve Centrale Raiffeisen-Boerenleenbank, B.A., Rabobank Nederland*, 84 Fed. Res. Bull. 852 (1998).

Board of Governors of the Federal Reserve System, June 29, 1999.

Robert deV. Frierson,

Associate Secretary of the Board.

[FR Doc. 99–16918 Filed 7–1–99; 8:45 am]

BILLING CODE 6210–01–F

FEDERAL RESERVE SYSTEM

Sunshine Act Meeting

AGENCY HOLDING THE MEETING: Board of Governors of the Federal Reserve System.

TIME AND DATE: 10:00 a.m., Wednesday, July 7, 1999.

PLACE: Marriner S. Eccles Federal Reserve Board Building, C Street entrance between 20th and 21st Streets, N.W., Washington, D.C. 20551.

STATUS: Open.

MATTERS TO BE CONSIDERED:

Discussion Agenda

1. Proposed 2000–2001 Federal Reserve Board budget objective.
2. Any items carried forward from a previously announced meeting.

Note: This meeting will be recorded for the benefit of those unable to attend. Cassettes will be available for listening in the Board's Freedom of Information Office, and copies may be ordered for $6 per cassette by calling 202–452–3684 or by writing to: Freedom of Information Office, Board of Governors of the Federal Reserve System, Washington, D.C. 20551.

CONTACT PERSON FOR MORE INFORMATION: Lynn S. Fox, Assistant to the Board; 202–452–3204.

SUPPLEMENTARY INFORMATION: You may call 202–452–3206 for a recorded announcement of this meeting; or you may contact the Board's Web site at http://www.federalreserve.gov for an electronic announcement. (The Web site also includes procedural and other information about the open meeting.)

Dated: June 30, 1999.

Robert deV. Frierson,

Associate Secretary of the Board.

[FR Doc. 99–17010 Filed 6–30–99; 12:20 pm]

BILLING CODE 6210–01–P

FEDERAL RESERVE SYSTEM

Sunshine Act Meeting

AGENCY HOLDING THE MEETING: Board of Governors of the Federal Reserve System.

TIME AND DATE: Approximately 10:30 a.m., Wednesday, July 7, 1999, following a recess at the conclusion of the open meeting.

PLACE: Marriner S. Eccles Federal Reserve Board Building, 20th and C Streets, N.W., Washington, D.C. 20551.

STATUS: Closed.

MATTERS TO BE CONSIDERED:

1. Proposals regarding a Federal Reserve Bank's Operations Center.
2. Personnel actions (appointments, promotions, assignments, reassignments, and salary actions) involving individual Federal Reserve System employees.
3. Any matters carried forward from a previously announced meeting.

CONTACT PERSON FOR MORE INFORMATION: Lynn S. Fox, Assistant to the Board; 202–452–3204.

SUPPLEMENTARY INFORMATION: You may call 202–452–3206 beginning at approximately 5 p.m. two business days before the meeting for a recorded announcement of bank and bank holding company applications scheduled for the meeting; or you may contact the Board's Web site at http://www.federalreserve.gov for an electronic announcement that not only lists applications, but also indicates procedural and other information about the meeting.

Dated: June 30, 1999.

Robert deV. Frierson,

Associate Secretary of the Board.

[FR Doc. 99–17011 Filed 6–30–99; 12:20 pm]

BILLING CODE 6210–01–P

GENERAL SERVICES ADMINISTRATION

[GSA Bulletin FPMR G–202]

Aviation, Transportation, and Motor Vehicles; Correction

ACTION: Notice; correction.

In notice document 99–16502, beginning on page 34808, Tuesday, June 29, 1999, text was omitted; and, for ease of the reader, the document is being republished in its entirety.

Dated: June 29, 1999.

Sharon A. Kiser,

FAR Secretariat.

The document, as corrected, reads as follows:

[GSA Bulletin FPMR G–202]

Aviation, Transportation, and Motor Vehicles

TO: Heads of Federal agencies.

SUBJECT: Eliminating the Use of Standard Form (SF) 1169, U.S. Government Transportation Request (GTR).

1. *What is the purpose of this bulletin*? This bulletin notifies Federal

agencies of the proposed elimination of Standard Form (SF) 1169, U.S. Government Transportation Request (GTR).

2. *When does this bulletin expire*? This bulletin will remain in effect until specifically canceled.

3. *What is the background*?

a. Currently, Federal Property Management Regulations (FPMR) (41 CFR part 101–41) require that SF 1169 be used to procure all passenger transportation services. For many years, the GTR has been recognized as the primary source document required to obtain passenger transportation services payable by the U.S. Government.

b. As we enter the 21st century, innovative ideas and methods are being applied to change the way the Government transacts its business. The General Services Administration (GSA) has already successfully:

(1) Implemented simplified travel regulations,

(2) Reduced the costs of administering travel programs, and

(3) Employed the use of a Government travel card to pay for travel expenses to reduce the Government's cash flow.

c. GSA is issuing the guidelines contained in this bulletin to inform agencies that, although a final decision has not been made, SF 1169 may become obsolete.

d. GSA's final review is anticipated by September 30, 2000.

e. Final action is anticipated early in the calendar year 2001.

4. *What are the guidelines*? To continue on the road of improvement, Federal agencies are encouraged to:

a. Focus attention on eliminating outdated methods of payment for passenger transportation services by adopting such payment methods as:

(1) Direct centrally billed accounts arranged through the Government travel card program,

(2) Direct charge to an employee's individual Government travel card, and

(3) Use of electronic fund payments.

b. Seek innovative ideas for ways to:

(1) Pay for passenger transportation services, and

(2) Eliminate the use of the GTR to the maximum extent possible.

5. *Why should the GTR be eliminated*? The GTR should be eliminated because:

a. Most travelers are not familiar with the form and process,

b. It is an accountable form and must be controlled,

c. The administrative burden of reconciling charges, unused tickets, and refund applications is significant,

d. The form and the process are outdated, and

e. There are better and more efficient ways for the Government to pay for commercial passenger transportation services.

6. *Why is elimination of SF 1169 in the interest of the Government*? If agencies can and will adopt best business practices for the payment of passenger transportation services, the Government can eliminate a significant administrative burden of processing and accounting for the GTR method of payment.

7. *Who should you contact for further information*? Jim Harte, Travel Team Leader, Travel and Transportation Management Policy Division (MTT), Office of Governmentwide Policy, General Services Administration, Washington, DC 20405; telephone, (202) 501–0483; e-mail, jim.harte@gsa.gov.

Dated: June 22, 1999.

Becky Rhodes,

Acting Associate Administrator, Office of Governmentwide Policy.

[FR Doc. 99–16926 Filed 7–1–99; 8:45 am]

BILLING CODE 6820–34–P

DEPARTMENT OF HEALTH AND HUMAN SERVICES

Food and Drug Administration

[Docket No. 99N–2100]

Agency Emergency Processing Under OMB Review; Survey of Manufacturers of Computer-Controlled Potentially High Risk Medical Devices Regarding Year 2000 Status

AGENCY: Food and Drug Administration, HHS.

ACTION: Notice.

SUMMARY: The Food and Drug Administration (FDA) is announcing that a proposed collection of information has been submitted to the Office of Management and Budget (OMB) for emergency processing under the Paperwork Reduction Act of 1995 (the PRA). The proposed collection of information concerns a survey of manufacturers of computer-controlled potentially high risk medical devices to ensure that they have properly assessed the Year 2000 (Y2K) status of their computer-controlled medical devices and developed and properly validated appropriate upgrades to correct any Y2K problem for those devices. On June 10, 1999, FDA testified before the Bennett-Dodd subcommittee on Y2K. The outcome of the hearing was directed by Congress to proceed as quickly as possible on the audit of these medical devices. Therefore, FDA is requesting OMB approval by July 9, 1999.

DATES: Submit written comments on the collection of information by July 6, 1999.

ADDRESSES: Submit written comments on the collection of information to the Office of Information and Regulatory Affairs, OMB, New Executive Office Bldg., 725 17th St. NW., rm. 10235, Washington, DC 20503, Attn: Desk Officer for FDA. All comments should be identified with the docket number found in brackets in the heading of this document.

FOR FURTHER INFORMATION CONTACT: Stewart Crumpler, Center for Devices and Radiological Health (HFZ–340), 2094 Gaither Rd., Rockville, MD 20850, 301–594–4659, ext. 119.

SUPPLEMENTARY INFORMATION: FDA has requested emergency processing of this proposed collection of information under section 3507(j) of the PRA (44 U.S.C. 3507(j)) and 5 CFR 1320.13. This information is needed immediately to respond to concerns from the General Accounting Office and others in the health care sector that FDA provide, as soon as possible, independent assurance that the manufacturers of computer-controlled potentially high risk medical devices have properly assessed the Y2K status of their computer-controlled medical devices and that they have developed and properly validated appropriate upgrades to correct any Y2K problem for those devices. The proposed study must be completed no later than September 6, 1999, in order to provide health care facilities and others with timely assurances that they need to complete their own assessments of their vulnerability to Y2K problems and to take corrective actions, if necessary, well in advance of January 1, 2000. In addition, if the data show previously undisclosed problems with manufacturers' Y2K assessments of computer-controlled potentially high risk devices, that information will allow the Government to undertake further actions, as necessary, to correct problems that might exist in order to protect the public health. It is vital that there be no Y2K failures of computer-controlled potentially high risk medical devices. The use of normal clearance procedures would not provide timely assurance that manufacturers are complying with the quality system regulations and, if problems are found, would not allow time to enact corrective actions in advance of January 1, 2000.

FDA invites comments on: (1) Whether the proposed collection of information is necessary for the proper performance of FDA's functions, including whether the information will have practical utility; (2) the accuracy of

FDA's estimate of the burden of the proposed collection of information, including the validity of the methodology and assumptions used; (3) ways to enhance the quality, utility, and clarity of the information to be collected; and (4) ways to minimize the burden of the collection of information on respondents, including through the use of automated collection techniques, when appropriate, and other forms of information technology.

Title: Survey of Manufacturers of Computer-Controlled Potentially High Risk Medical Devices Regarding Year 2000 Status

Under section 201 of the Federal Food, Drug, and Cosmetic Act (the act) (21 U.S.C. 321 *et seq.*), a medical device is adulterated if not designed and manufactured in accordance with good manufacturing practices specified in the quality system regulations in 21 CFR part 820. Among other provisions, this regulation requires that manufacturers take action to correct an identified quality problem and to prevent its recurrence. This regulation also requires that devices be developed in accordance with specified design controls, including validation of the change. From inspectional experience for all types of devices and device issues, the Center for Devices and Radiological Health believes that the quality systems of manufacturers and the potential regulatory sanctions of the act are sufficient to ensure that manufacturers will take responsible action to correct serious Y2K problems in their devices. In addition to possible FDA enforcement action, manufacturers have very strong business and legal incentives to make sure any Y2K-related upgrade is safe and provides the correct performance needed for the device. These incentives include customer satisfaction and the potential liability that would result from an incorrect or inadequate upgrade to a product that results in harm to a patient. Also relevant is the added expense and adverse publicity associated with a device recall that would result when a problem in uncovered and corrections have to be implemented.

However, because of the unprecedented potential for adverse impact on medical devices by Y2K problems, FDA believes it is both necessary and prudent to validate these assumptions by conducting a limited survey of manufacturers of the types of medical devices that pose the greatest potential risk to patients. To this end, FDA has developed a list of computer-controlled potentially high risk medical devices, as well as a list of the manufacturers who produce these types of devices. FDA will survey a sample drawn from the list of manufacturers to ensure that manufacturers have: (1) Properly assessed the Y2K status of their computer-controlled medical devices; (2) identified all devices subject to a possible date related Y2K problem; (3) applied risk analyses to determine the appropriate remedial action to be undertaken; (4) validated any new hardware or software developed to fix the identified Y2K problem; and (5) properly communicated information on the Y2K remediation to affected customers. This applies to all devices still in use in health care facilities—both current production and any previously distributed devices.

A selected sample of the manufacturers of computer-controlled potentially high-risk medical devices will be asked to voluntarily participate in the survey. An FDA contractor employing experienced software quality engineers, or persons with similar qualifications, will schedule a survey at the manufacturer's site. During the survey, the FDA contractor will review the design records of the manufacturer, examining the adequacy of the firm's procedures for Y2K assessments and, if applicable, Y2K corrective actions. The survey will also provide reasonable assurance that Y2K assessment and, if applicable, remediation procedures have been consistently applied to all currently produced or previously manufactured high risk devices.

This survey is not intended to be comprehensive, but is intended to cover a representative sample of the manufacturers of computer-controlled potentially high risk medical devices. The results of the survey will provide a basis for continued confidence in manufacturers' capability to produce a supply of Y2K safe medical devices in compliance with the quality system regulation as well as confidence in the general accuracy of manufacturers' claims in the FDA operated Federal Y2K Biomedical Equipment Clearinghouse.

Respondents: Manufacturers of Computer-Controlled Potentially High Risk Medical Devices

FDA estimates the burden of this collection as follows:

TABLE 1.—ESTIMATED ANNUAL REPORTING BURDEN[1]

No. of Respondents	Annual Frequency per Response	Total Annual Responses	Hours per Response	Total Hours
80	1	80	43	3,440

[1] There are no capital costs or operating and maintenance costs associated with this collection of information.

These estimates are based on FDA's experience in conducting field investigations and audits. In order to more sharply focus the agency efforts related to the possible impact of the Y2K date problem on medical devices, FDA has developed a list of types of computer-controlled, potentially high-risk medical devices that have the potential for the most serious consequences for the patient should they fail. Inclusion of a type of device on this list does not mean that all devices of this type have a date related problem (are Y2K noncompliant) or, if they are Y2K noncompliant, that they necessarily pose a significant risk to patients. Rather, this list includes those types of devices that could pose a risk to patients if the date-related failure affects the function or operation of the device. Using agency data bases, FDA then determined the manufacturers that produce these types of medical devices. The sample to be surveyed was drawn from this pool of manufacturers. FDA estimates that it will take manufacturers an average of 43 hours to prepare for and participate in the survey. This includes time to make records available to the surveyor at the manufacturer's site; participate in interviews and briefings, if necessary; and to review and respond to the surveyor's report, if desired. These estimates include allowance for variance in the number of high risk devices produced by a individual manufacturer.

Dated: June 29, 1999.

William K. Hubbard,

Senior Associate Commissioner for Policy, Planning and Legislation.

[FR Doc. 99–16938 Filed 7–1–99; 8:45 am]

BILLING CODE 4160–01–F

DEPARTMENT OF HEALTH AND HUMAN SERVICES

Food and Drug Administration

[Docket No. 99F–2082]

National Starch and Chemical Co.; Filing of Food Additive Petition

AGENCY: Food and Drug Administration, HHS.

ACTION: Notice.

SUMMARY: The Food and Drug Administration (FDA) is announcing that National Starch and Chemical Co. has filed a petition proposing that the food additive regulations be amended to provide for the safe use of food starch modified by amylolytic enzymes.

FOR FURTHER INFORMATION CONTACT: Mary E. LaVecchia, Center for Food Safety and Applied Nutrition (HFS–215), Food and Drug Administration, 200 C St. SW., Washington, DC 20204, 202–418–3072.

SUPPLEMENTARY INFORMATION: Under the Federal Food, Drug, and Cosmetic Act (sec. 409(b)(5) (21 U.S.C. 348(b)(5))), notice is given that a food additive petition (FAP 9A4674) has been filed by National Starch and Chemical Co., 10 Finderne Ave., Bridgewater, NJ 08807–0500. The petition proposes to amend the food additive regulations in § 172.892(i) *Food starch-modified* (21 CFR 172.892(i)) to provide for the safe use of food starch modified by amylolytic enzymes.

The agency has determined under 21 CFR 25.32(k) that this action is of a type that does not individually or cumulatively have a significant effect on the human environment. Therefore, neither an environmental assessment nor an environmental impact statement is required.

Dated: June 17, 1999.

Laura M. Tarantino,

Acting Director, Office of Premarket Approval, Center for Food Safety and Applied Nutrition.

[FR Doc. 99–16837 Filed 7–1–99; 8:45 am]

BILLING CODE 4160–01–F

DEPARTMENT OF HEALTH AND HUMAN SERVICES

Food and Drug Administration

[Docket No. 99F–2081]

Troy Corp.; Filing of Food Additive Petition

AGENCY: Food and Drug Administration, HHS.

ACTION: Notice.

SUMMARY: The Food and Drug Administration (FDA) is announcing that Troy Corp. has filed a petition proposing that the food additive regulations be amended to provide for the safe use of butanedioic acid, sulfo-1,4-diisodecyl ester, ammonium salt as a surface active agent in pressure sensitive adhesives.

FOR FURTHER INFORMATION CONTACT: Mark A. Hepp, Center for Food Safety and Applied Nutrition, HFS–215, Food and Drug Administration, 200 C St. SW., Washington, DC 20204, 202–418–3098.

SUPPLEMENTARY INFORMATION: Under the Federal Food, Drug, and Cosmetic Act (sec. 409(b)(5) (21 U.S.C. 348(b)(5))), notice is given that a food additive petition (FAP 9B4678) has been filed by Troy Corp., c/o S. L. Graham & Associates, 1801 Peachtree Lane, Bowie, MD 20721. The petition proposes to amend the food additive regulations in § 175.125 Pressure-sensitive adhesives (21 CFR 175.125) to provide for the safe use of butanedioic acid, sulfo-1,4-diisodecyl ester, ammonium salt as a surface active agent in pressure sensitive adhesives.

The agency has determined under 21 CFR 25.32(I) that this action is of a type that does not individually or cumulatively have a significant effect on the human environment. Therefore, neither an environmental assessment nor an environmental impact statement is required.

Dated: June 17, 1999.

Laura M. Tarantino,

Acting Director, Office of Premarket Approval, Center for Food Safety and Applied Nutrition.

[FR Doc. 99–16834 Filed 7–1–99; 8:45 am]

BILLING CODE 4160–01–F

DEPARTMENT OF HEALTH AND HUMAN SERVICES

Health Care Financing Administration

[HCFA–3019–N]

Medicare Program; July 19, 1999 Open Town Hall Meeting To Discuss the Implementation of the Peer Review Organizations' (PROs) Sixth Round Contract Activities

AGENCY: Health Care Financing Administration (HCFA), HHS.

ACTION: Notice of meeting.

SUMMARY: This notice announces a Town Hall meeting to provide an opportunity for national health care organizations, beneficiary advocates, and other interested parties to ask questions and raise issues regarding the August 1999 implementation of the Peer Review Organizations' (PROs) Sixth Round Contract activities. The meeting will also explore how the entire health care community can identify ways to collaborate on quality improvement projects that will raise the quality of care provided to Medicare beneficiaries. The agency views this new round of contracts as an opportunity to develop partnerships with the provider, practitioner, plan, purchaser and beneficiary communities. The meeting will address how PROs, health care organizations and Medicare beneficiaries can form partnerships in the following areas:

- National quality improvement projects;
- Local quality improvement projects;
- Quality improvement projects in conjunction with Medicare+Choice plans; and
- Inclusion of disadvantaged populations within each of the quality improvement projects.

The meeting will also address the Payment Error Prevention Program, which deals with reducing the occurrence of provider billing errors and consequent payment errors, including both over- and under-payment.

DATES: The meeting is scheduled for Monday, July 19, 1999 from 9 a.m. until 3 p.m., E.D.T.

ADDRESSES: The meeting will be held in the Health Care Financing Administration Main Auditorium, 7500 Security Boulevard, Baltimore, Maryland 21244.

FOR FURTHER INFORMATION CONTACT: Donald Forgione, (410) 786–3504, Yvette Williams, (410) 786–6844.

SUPPLEMENTARY INFORMATION:

Background

The Town Hall meeting will provide an opportunity for organizations representing practitioners, providers, health plans, other purchasers, beneficiaries and other interested parties to ask questions and raise issues regarding the activities of the PRO Sixth Round Contract and how they can partner with PROs in achieving quality improvements for Medicare beneficiaries and improved payment accuracy. This Town Hall meeting provides an opportunity for information exchange concerning Request For Proposals (RFP) and the Payment Error Prevention Program (Task 4). RFP No. HCFA–99–00/ELM (March 1, 1999) Sec. C (3.1–3.4, pp. 17–30.

Task 1 concerns National Quality Improvement Projects and focuses on specific national health improvement clinical topics, acute myocardial infarction, heart failure, pneumonia,

stroke/transient ischemic attack/atrial fibrillation, diabetes, and breast cancer. The PROs, in conjunction with their partners, will use standardized sets of quality indicators to identify the greatest opportunities to improve the care of Medicare beneficiaries.

Task 2 on Local Quality Improvement Projects directs each PRO to initiate local projects within its State in response to local interests, needs, and opportunities. HCFA is interested in broadening the PROs' experience in collaborating with providers, practitioners, plans, purchasers, and beneficiaries to improve the quality of care they deliver. We are also interested in the testing of quality indicators and intervention strategies that reflect care in settings other than acute-care hospitals and Medicare+Choice plans.

Task 3 on Quality Improvement Projects conducted in conjunction with Medicare+Choice Plans, requires the plans to implement quality improvement projects as part of the Quality Improvement System for Managed Care standards. Each Medicare+Choice plan must initiate two performance improvement projects annually. The Balanced Budget Act of 1997 (BBA) requires most M+C plans to have an agreement with the PRO to carry out all required review activities.

Task 4 on the Payment Error Prevention Program is a modified review activity that strives to identify opportunities for improvement in the billing process to reduce the occurrence of incorrect payments resulting from provider billing errors. Errors may include both over-billings and under-billings. The error rate would be the total dollars paid in error, either above or below the correct amount. PROs will conduct the Payment Error Prevention Program in two areas: unnecessary admissions and miscoded diagnosis-related group assignments.

While the meeting is open to the public, attendance is limited to space available. Individuals must register in advance as described below.

Registration

The Office of Clinical Standards and Quality will handle registration for the meeting. Individuals may register by sending a fax to the attention of Don Forgione, Yvette Williams, or Ida Sarsitis, in the Division of Contract Policy and Performance. Please provide your name, address, telephone number, e-mail, and fax number on your registration request.

Receipt of your fax will constitute confirmation of your registration. You will be provided with meeting materials at the time of the meeting. If there is no available seating for the Town Meeting, you will receive a notice that the meeting is at capacity.

For fax registration, the number is (410) 786–4005.

If you have questions regarding registration, please contact Don Forgione at (410) 786–3504 or Yvette Williams at (410) 786–6844. Inquiries via e-mail should be sent to DForgione@hcfa.gov or to YWilliams@hcfa.gov.

The agency will accept written questions or other statements (not to exceed four single-spaced, typed pages), preferably before the meeting, or up to 14 days after the meeting. Written submissions must be sent to: Health Care Financing Administration, ATTN: Steven Jencks, M.D., Director, Quality Improvement Group, Office of Clinical Standards and Quality, S3–01–17, 7500 Security Boulevard, Baltimore, Maryland 21244–1850.

Authority: Section 1102 of the Social Security Act (42 U.S.C. 1302) (42 CFR 462.167).

Dated: June 29, 1999.

Nancy-Ann Min DeParle,

Administrator, Health Care Financing Administration.

[FR Doc. 99–17025 Filed 7–1–99; 8:45 am]

BILLING CODE 4120–01–P

DEPARTMENT OF HEALTH AND HUMAN SERVICES

Indian Health Service

Request for Public Comment: 30-Day; Proposed Collection: IHS Registered Nurses Recruitment and Retention Survey

SUMMARY: In compliance with section 3506(c)(2)(A) of the Paperwork Reduction Act of 1995, the Indian Health Service (IHS) provided an opportunity for public comment on the proposed agency information collection project. A notice was previously published in the **Federal Register** on December 24, 1998 (63 FR 71297), and 60 days were allowed for public comment. No public comment was received in response to the notice. As required by section 3507(a)(1)(D) of the Act, the proposed information collection has been submitted to the Office of Management and Budget (OMB) for review. The purpose of this notice is to allow an additional 30 days for public comment to be submitted directly to the OMB.

PROPOSED COLLECTION: *Title:* 09–17–0000, ''IHS Registered Nurses Recruitment and Retention Survey.'' *Type of Information Collection Request:* New collection. *Form Number:* No reporting forms required. *Need and Use of Information Collection:* The information collected in the proposed survey will be used to determine which improvements made since 1984 have worked and what additional changes need to be made to continue to attract and retain registered nurses in the IHS, tribal, and urban (I/T/U) programs. The information collected in the survey will help to determine (1) the factors that lead to the initial decision to work in the Indian health program; (2) what aspects of the job do/did these employees like or dislike and why; (3) how environmental and personal factors, such as living on or near reservations, local or government housing, distance to shopping, schools (pre-school, elementary, and high school), social activities, child care facilities, location and size of non-Indian community, sex and race differences, etc., affect their decision to continue with or terminate IHS employment; and (4) how work-related issues and current changes, such as Indian preference, quality of other health care staff, local health care management practices, managed care, tribal self-governance and self-determination, etc., affect their decision to stay with or leave IHS employment. *Affected Public:* Individuals. *Type of Respondents:* Current I/T/U registered nurses.

Table 1 below provides the following information: types of data collection instruments, estimated number of respondents, number of responses per respondent, average burden hour per response, and total annual burden hour.

TABLE 1

Data collection instrument	Estimated number of respondents	Responses per respondent	Annual number of responses	Average burden hour per response*	Total annual burden hours
Nursing Survey	600	1	600	1.00 (60 min)	600

*For ease of understanding, burden hours are also provided in actual minutes.

There are no capital costs, operating costs, or maintenance costs to report.

REQUEST FOR COMMENTS: Your written comments and/or suggestions are invited on one or more of the following points: (1) Whether the information collection activity is necessary to carry out an agency function; (2) whether the agency processes the information collected in a useful and timely fashion; (3) the accuracy of the public burden estimate (the estimated amount of time needed for individual respondents to provide the requested information); (4) whether the methodology and assumptions used to determine the estimate are logical; (5) ways to enhance the quality, utility, and clarity of the information being collected; and (6) ways to minimize the public burden through the use of automated, electronic, mechanical, or other technological collection techniques or other forms of information technology.

DIRECT COMMENTS TO OMB: Send your written comments and suggestions regarding the proposed information collection contained in this notice, especially regarding the estimated public burden and associated response time, to: Office of Management and Budget, Office of Regulatory Affairs, New Executive Office Building, Room 10235, Washington, DC 20503, Attention: Desk Officer for IHS.

To request information on the proposed collection or to obtain a copy of the data collection instrument(s) and/or instruction(s), contact: Mr. Lance Hodahkwen, Sr., M.P.H., IHS Reports Clearance Officer, 12300 Twinbrook Parkway, Suite 450, Rockville, MD 20852–1601, call non-toll free (301) 443–5938 or send via fax to (301) 443–2316, or send your e-mail requests, comments, and return address to: ihodahkw@hqe.ihs.gov.

COMMENT DUE DATE: Comments regarding this information collection are best assured of having their full effect if received on or before August 2, 1999.

Dated: June 22, 1999.

Michel E. Lincoln,

Acting Director.

[FR Doc. 99–16838 Filed 7–1–99; 8:45 am]

BILLING CODE 4160–16–M

DEPARTMENT OF HEALTH AND HUMAN SERVICES

National Institutes of Health

National Cancer Institute; Notice of Closed Meeting

Pursuant to section 10(d) of the Federal Advisory Committee Act, as amended (5 U.S.C. Appendix 2), notice is hereby given of the following meeting.

The meeting will be closed to the public in accordance with the provisions set forth in sections 552b(c)(4) and 552b(c)(6), Title 5 U.S.C., as amended. The grant applications and the discussions could disclose confidential trade secrets or commercial property such as patentable material, and personal information concerning individuals associated with the grant applications, the disclosure of which would constitute a clearly unwarranted invasion of personal privacy.

Name of Committee: National Cancer Institute Special Emphasis Panel, Transdisciplinary Tobacco Use Research Centers.

Date: July 27–29, 1999.

Time: 7:30 pm to 5:00 pm.

Agenda: To review and evaluate grant applications.

Place: Embassy Suites, Chevy Chase Pavilion, 4300 Military Rd., Wisconsin at Western Ave., Washington, DC 20015.

Contact Person: Gerald G. Lovinger, PhD, Scientific Review Administrator, Grants Review Branch, Division of Extramural Activities, National Cancer Institute, National Institutes of Health, 6130 Executive Boulevard/EPN—Room 630D, Rockville, MD 20892–7405, 301/496–7987.

(Catalogue of Federal Domestic Assistance Program Nos. 93.392, Cancer Construction; 93.393, Cancer Cause and Prevention Research; 93.394, Cancer Detection and Diagnosis Research; 93.395, Cancer Treatment Research; 93.396, Cancer Biology Research; 93.397, Cancer Centers Support; 93.398, Cancer Research Manpower; 93.339, Cancer Control, National Institutes of Health, HHS)

Dated: June 25, 1999.

Anna Snouffer,

Acting Committee Management Officer, NIH.

[FR Doc. 99–16881 Filed 7–1–99; 8:45 am]

BILLING CODE 4140–01–M

DEPARTMENT OF HEALTH AND HUMAN SERVICES

National Institutes of Health

National Cancer Institute; Notice of Closed Meeting

Pursuant to section 10(d) of the Federal Advisory Committee Act, as amended (5 U.S.C. Appendix 2), notice is hereby given of the following meeting.

The meeting will be closed to the public in accordance with the provisions set forth in sections 552b(c)(4) and 552b(c)(6), Title 5 U.S.C. as amended. The grant applications and the discussions could disclose confidential trade secrets or commercial property such as patentable material, and personal information concerning individuals associated with the grant applications, the disclosure of which would constitute a clearly unwarranted invasion of personal privacy.

Name of Committee: National Cancer Institute Special Emphasis Panel, Quick-Trails for Prostate Cancer Therapy.

Date: July 15, 1999.

Time: 7:30 am to 7:00 pm.

Agenda: To review and evaluate grant applications.

Place: Double Tree Hotel, 7801 Leesburg Pike, Falls Church, VA 22043.

Contact Person: Judy A. Mietz, PhD, Executive Secretary, Office of Advisory Activities, Division of Extramural Activities, National Cancer Institute, National Institute of Health, 6130 Executive Boulevard/EPN–Room 609, Rockville, MD 20892–7410, 301/496–2378.

This notice is being published less than 15 days prior to the meting due to the timing limitations imposed by the review and funding cycle.

(Catalogue of Federal Domestic Assistance Program Nos. 93.392, Cancer Construction; 93.393, Cancer Cause and Prevention Research; 93.394, Cancer Detection and Diagnosis Research; 93.395, Cancer Treatment Research; 93.396, Cancer Biology Research; 93.397, Cancer Centers Support; 93.398, Cancer Research Manpower; 93.399, Cancer Control, National Institutes of Health, HHS)

Dated: June 28, 1999.

LaVerne Y. Stringfield,

Committee Management Officer, NIH.

[FR Doc. 99–16890 Filed 7–1–99; 8:45 am]

BILLING CODE 4140–01–M

DEPARTMENT OF HEALTH AND HUMAN SERVICES

National Institutes of Health

National Center for Research Resources; Notice of Closed Meeting

Pursuant to section 10(d) of the Federal Advisory Committee Act, as amended (5 U.S.C. Appendix 2), notice is hereby given of the following meeting.

The meeting will be closed to the public in accordance with the provisions set forth in sections 552b(c)(4) and 552b(c)(6), Title 5 U.S.C., as amended. The grant applications and the discussions could disclose confidential trade secrets or commercial property such as patentable material, and personal information concerning individuals associated with the grant applications, the disclosure of which would constitute a clearly unwarranted invasion of personal privacy.

Name of Committee: National Center for Research Resources Special Emphasis Panel Comparative Medicine Review Committee.

Date: July 14, 1999.

Time: 3:00 p.m. to 4:00 p.m.

Agenda: To review and evaluate grant applications.

Place: 6705 Rockledge Drive, Suite 6018, Bethesda, MD 20892 (Telephone Conference Call).

Contact Person: John D. Harding, Scientific Review Administrator, Office of Review, National Center for Research Resources, 6705 Rockledge Drive, MSC 7965, Room 6018, Bethesda, MD 20892–7965, 301–435–0820.

(Catalogue of Federal Domestic Assistance Program Nos. 93.306, Comparative Medicine, 93.306; 93.333, Clinical Research, 93.333; 93.371, Biomedical Technology; 93.389, Research Infrastructure. National Institutes of Health, HHS)

Dated: June 28, 1999.

Anna Snouffer,

Acting Committee Management Officer, NIH.

[FR Doc. 99–16886 Filed 7–1–99; 8:45 am]

BILLING CODE 4140–01–M

DEPARTMENT OF HEALTH AND HUMAN SERVICES

National Institutes of Health

National Heart, Lung, and Blood Institute; Notice of Closed Meeting

Pursuant to section 10(d) of the Federal Advisory Committee Act, as amended (5 U.S.C. Appendix 2), notice is hereby given on the following meeting.

The meeting will be closed to the public in accordance with the provisions set forth in sections 552b(c)(4) and 552b(c)(6), Title 5 U.S.C., as amended. The grant applications and the discussions could disclose confidential trade secrets or commercial property such as patentable material, and personal information concerning individuals associated with the grant applications, the disclosure of which would constitute a clearly unwarranted invasion of personal privacy.

Name of Committee: National Heart, Lung, and Blood Institute Special Emphasis Panel CHD in Polycystic Ovary Syndrome (SCHIPS).

Date: July 26, 1999.

Time: 8:00 am to 1:00 pm.

Agenda: To review and evaluate grant applications.

Place: Holiday Inn—Silver Spring, 8777 Georgia Avenue, Silver Spring, MD 20910.

Contact Person: Valerie, L. Prenger, PhD, Health Scientist Administrator, Review Branch, NIH, NHLBI, DEA, Rockledge Building II, 6701 Rockledge Drive, Suite 7198, Bethesda, MD 20892–7924, (301) 435–0297.

(Catalogue of Federal Domestic Assistance Program Nos. 93.233, National Center for Sleep Disorders Research; 93.837, Heart and Vascular Diseases Research; 93.838, Lung Diseases Research; 93.839, Blood Diseases and Resources Research, National Institutes of Health, HHS)

Dated: June 28, 1999.

LaVerne Y. Stringfield,

Committee Management Officer, NIH.

[FR Doc. 99–16894 Filed 7–1–99; 8:45 am]

BILLING CODE 4140–01–M

DEPARTMENT OF HEALTH AND HUMAN SERVICES

National Institutes of Health

National Institute of Child Health and Human Development; Notice of Closed Meeting

Pursaunt to section 10(d) of the Federal Advisory Committee Act, as amended (5 U.S.C. Appendix 2), notice is hereby given of the following meeting.

The meeting will be closed to the public in accordance with the provisions set forth in sections 552b(c)(4) and 552b(c)(6), Title 5 U.S.C., as amended. The grant applications and the discussions could disclose confidential trade secrets or commercial property such as patentable material, and information concerning individuals associated with the grant applications, the disclosure of which would constitute a clearly unwarranted invasion of personal privacy.

Name of Committee: National Institute of Child Health and Human Development Special Emphasis Panel U54 Grant Applications Review.

Date: July 26–27, 1999.

Time: 7:30 pm to 5:00 pm.

Agenda: To review and evaluate grant applications.

Place: Holiday Inn—Silver Spring, 8777 Georgia Avenue, Silver Spring, MD 20910.

Contact Person: Jon M. Ranhand, Phd, Scientist Review Administrator, Division of Scientific Review, National Institute of Child Health, and Human Development, NIH, 6100 Executive Blvd., Room 5E03, Bethesda, MD 20892, (301) 435–6884.

(Catalogue of Federal Domestic Assistance Program Nos. 93.209, Contraception and Infertility Loan Repayment Program; 93.864, Population Research; 93.865, Research for Mothers and Children; 93.929, Center for Medical Rehabilitation Research, National Institutes of Health, HHS).

Dated: June 25, 1999.

Anna Snouffer,

Acting Committee Management Officer, NIH.

[FR Doc. 99–16882 Filed 7–1–99; 8:45 am]

BILLING CODE 4140–01–M

DEPARTMENT OF HEALTH AND HUMAN SERVICES

National Institutes of Health

National Institute of Diabetes and Digestive and Kidney Diseases Notice of Closed Meetings

Pursuant to section 10(d) of the Federal Advisory Committee Act, as amended (5 U.S.C. Appendix 2), notice is hereby given of the following meetings.

The meetings will be closed to the public in accordance with the provisions set forth in sections 552b(c)(4) and 552b(c)(6), Title 5 U.S.C., as amended. The grant applications and the discussions could disclose confidential trade secrets or commercial property such as patentable material, and personal information concerning individuals associated with the grant applications, the disclosure of which would constitute a clearly unwarranted invasion of personal privacy.

Name of Committee: National Institute of Diabetes and Digestive and Kidney Diseases Special Emphasis Panel, ZDK1 GRB–402.

Date: July 16, 1999.

Time: 3 p.m. to 5 p.m.

Agenda: To review and evaluate grant applications.

Place: National Institutes of Health, Natcher Bldg., 45 Center Drive, Room 6AS–25S, Bethesda, MD 20892, (Telephone Conference Call).

Contact Person: William E. Elzinga, PhD, Scientific Review Administrator, Review Branch, DEA, NIDDK, Natcher Building, Room 6AS–37, National Institutes of Health, Bethesda, MD 20892–6600, (301) 594–8895.

Name of Committee: National Institute of Diabetes and Digestive and Kidney Diseases Special Emphasis Panel, ZDK1 GRB–B 02.

Date: July 19–20, 1999.

Time: 7:30 p.m. to 5 p.m.
Agenda: To review and evaluate grant applications.
Place: Hyatt Regency, One Metro Center, Bethesda, MD 20814.
Contact Person: Ned Feder, MD, Scientific Review Administrator, Review Branch, DEA, NIDDK, Natcher Building, Room 6AS25s, National Institutes of Health, Bethesda, MD 20892, (301) 594–8890.

Name of Committee: National Institute of Diabetes and Digestive and Kidney Diseases Special Emphasis Panel, ZDK1 GRB–B 01.
Date: July 19, 1999.
Time: 12 p.m. to 3 p.m.
Agenda: To review and evaluate grant applications.
Place: National Institutes of Health, Natcher Bldg., 45 Center Drive, Room 6AS–37, Bethesda, MD 20892, (Telephone Conference Call).
Contact Person: Ned Feder, MD, Scientific Review Administrator, Review Branch, DEA, NIDDK, Natcher Building, Room 6AS25s, National Institutes of Health, Bethesda, MD 20892, (301) 594–8890.

(Catalogue of Federal Domestic Assistance Program Nos. 93.847, Diabetes, Endocrinology and Metabolic Research; 93.848, Digestive Diseases and Nutrition Research; 93.849, Kidney Diseases, Urology and Hematology Research, National Institutes of Health, HHS).

Dated: June 25, 1999.

Anna Snouffer,

Acting Director, Office of Federal Advisory Committee Policy.

[FR Doc. 99–16883 Filed 7–1–99; 8:45 am]

BILLING CODE 4140–01–M

DEPARTMENT OF HEALTH AND HUMAN SERVICES

National Institutes of Health

National Institute of Mental Health; Notice of Closed Meetings

Pursuant to section 10(d) of the Federal Advisory Committee Act, as amended (5 U.S.C. Appendix 2), notice is hereby given of the following meetings.

The meetings will be closed to the public in accordance with the provisions set forth in sections 552b(c)(4) and 552b(c)(6), title 5 U.S.C., as amended. The grant applications and the discussions could disclose confidential trade secrets or commercial property such as patentable material, and personal information concerning individuals associated with the grant applications, the disclosure of which would constitute a clearly unwarranted invasion of personal privacy.

Name of Committee: National Institute of Mental Health Special Emphasis Panel.
Date: July 20, 1999.
Time: 1 pm to 2 pm.
Agenda: To review and evaluate grant applications.
Place: Neuroscience Center, National Institutes of Health, 6001 Executive Blvd., Bethesda, MD 20892 (Telephone Conference Call).
Contact Person: Henry J. Haigler, PhD, Scientific Review Administrator, Division of Extramural Activities, National Institute of Mental Health, NIH, Neuroscience Center, 6001 Executive Blvd., Rm. 6150, MSC 9608, Bethesda, MD 20892–9608, 301–443–7216.

This notice is being published less than 15 days prior to the meeting due to the timing limitations imposed by the review and funding cycle.

Name of Committee: National Institute of Mental Health Special Emphasis Panel.
Date: July 20, 1999.
Time: 2 pm to 3 pm.
Agenda: To review and evaluate grant applications.
Place: Neuroscience Center, National Institutes of Health, 6001 Executive Blvd., Bethesda, MD 20892 (Telephone Conference Call).
Contact Person: Henry J. Haigler, PhD, Scientific Review Administrator, Division of Extramural Activities, National Institute of Mental Health, NIH, Neuroscience Center, 6001 Executive Blvd., Rm. 6150, MSC 9608, Bethesda, MD 20892–9608, 301–443–7216.

This notice is being published less than 15 days prior to the meeting due to the timing limitations imposed by the review and funding cycle.

Name of Committee: National Institute of Mental Health Special Emphasis Panel.
Date: July 26, 1999.
Time: 9 pm to 5 pm.
Agenda: To review and evaluate grant applications.
Place: St. James Hotel, 950 24th Street, N.W., Washington, DC 20037.
Contact Person: Jean G. Noronha, PhD, Scientific Review Administrator, Division of Extramural Activities, National Institute of Mental Health, NIH, Neuroscience Center, 6001 Executive Blvd., Rm. 6154, MSC 9609, Bethesda, MD 20892–9609, 301–443–6470.

Name of Committee: National Institute of Mental Health Special Emphasis Panel.
Date: July 29, 1999.
Time: 9 pm to 3 pm.
Agenda: To review and evaluate grant applications.
Place: Holiday Inn Bethesda, 8120 Wisconsin Ave, Bethesda, MD 20814.
Contact Person: Henry J. Haigler, PhD, Scientific Review Administrator, Division of Extramural Activities, National Institute of Mental Health, NIH, Neuroscience Center, 6001 Executive Blvd., Rm. 6150, MSC 9608, Bethesda, MD 20892–9608, 301–443–7216.

Name of Committee: National Institute of Mental Health Special Emphasis Panel.
Date: August 4, 1999.
Time: 11 pm to 12:30 pm.
Agenda: To review and evaluate grant applications.
Place: Neuroscience Center, National Institutes of Health, 6001 Executive Blvd., Bethesda, MD 20892 (Telephone Conference Call).
Contact Person: Jean G. Noronha, PhD, Scientific Review Administrator, Division of Extramural Activities, National Institute of Mental Health, NIH, Neuroscience Center, 6001 Executive Blvd., Rm. 6154, MSC 9609, Bethesda, MD 20892–9609, 301–443–6470.

(Catalogue of Federal Domestic Assistance Program Nos. 93.242, Mental Health Research Grants; 93.281, Scientist Development Award, Scientist Development Award for Clinicians, and Research Scientist Award; 93.282, Mental Health National Research Service Awards for Research Training, National Institutes of Health, HHS)

Dated: June 25, 1999.

Anna Snouffer,

Acting Director, Office of Federal Advisory Committee Policy.

[FR Doc. 99–16884 Filed 7–1–99; 8:45 am]

BILLING CODE 4140–01–M

DEPARTMENT OF HEALTH AND HUMAN SERVICES

National Institutes of Health

National Institute on Aging; Notice of Closed Meetings

Pursuant to section 10(d) of the Federal Advisory Committee Act, as amended (5 U.S.C. Appendix 2), notice is hereby given of the following meetings.

The meetings will be closed to the public in accordance with the provisions set forth in sections 552b(c)(4) and 552b(c)(6), Title 5 U.S.C., as amended. The grant applications and the discussions could disclose confidential trade secrets or commercial property such as patentable material, and personal information concerning individuals associated with the grant applications, the disclosure of which would constitute a clearly unwarranted invasion of personal privacy.

Name of Committee: National Institute on Aging Special Emphasis Panel, Pepper Centers.
Date: July 15, 1999.
Time: 12:30 p.m. to 5:00 p.m.
Agenda: To review and evaluate grant applications.
Place: 7201 Wisconsin Ave., Suite 502C, MD 20891 (Telephone Conference Call).
Contact Person: Arthur Schaerdel, DVM, The Bethesda Gateway Building, 7201 Wisconsin Avenue/Suite 2C212, Bethesda, MD 20892, (301) 496–9666.

Name of Committee: National Institute on Aging Special Emphasis Panel, A Population-Based, Multidisciplinary Study of Centenarians.
Date: July 19–20, 1999.
Time: 6:00 p.m. to 5:00 p.m.
Agenda: To review and evaluate grant applications.
Place: Pooks Hill Marriott, 5151 Pooks Hill Road, Bethesda, MD 20814.
Contact Person: William A. Kachadorian, The Bethesda Gateway Building, 7201 Wisconsin Avenue/Suite 2C212, Bethesda, MD 20892, (301) 496–9666.

Name of Committee: National Institute on Aging Special Emphasis Penal, Excitatory Transmitters, Memory, Aging and Dementia.
Date: July 26–27, 1999.
Time: 6:00 p.m. to 5:00 p.m.
Agenda: To review and evaluate grant applications.
Place: Pooks Hill Marriott, 5151 Pooks Hill Road, Bethesda, MD 20814.
Contact Person: William A. Kachadorian, The Bethesda Gateway Building, 7201 Wisconsin Avenue/Suite 2C212, Bethesda, MD 20892, (301) 496–9666.

(Catalogue of Federal Domestic Assistance Program Nos. 93.866, Aging Research, National Institutes of Health, HHS)

Dated: June 25, 1999.

Anna Snouffer,

Acting Director, Office of Federal Advisory Committee Policy.

[FR Doc. 99–16885 Filed 7–1–99; 8:45 am]

BILLING CODE 4140–01–M

DEPARTMENT OF HEALTH AND HUMAN SERVICES

National Institutes of Health

National Institute of Mental Health; Notice of Closed Meeting

Pursuant to section 10(d) of the Federal Advisory Committee Act, as amended (5 U.S.C. Appendix 2), notice is hereby given of the following meeting.

The meeting will be closed to the public in accordance with the provisions set forth in sections 552b(c)(4) and 552b(c)(6), Title 5 U.S.C., as amended. The grant applications and the discussions could disclose confidential trade secrets or commercial property such as patentable material, and personal information concerning individuals associated with the grant applications, the disclosure of which would constitute a clearly unwarranted invasion of personal privacy.

Name of Committee: National Institute of Mental Health Special Emphasis Panel.
Date: July 29–30, 1999.
Time: 9:00 a.m. to 5:00 p.m.
Agenda: To review and evaluate grant applications.
Place: Chevy Chase Holiday Inn, 5520 Wisconsin Ave., Chevy Chase, MD 20815.
Contact Person: Sheila O'Malley, Scientific Review Administrator, Division of Extramural Activities, National Institute of Mental Health, NIH, Neuroscience Center, 6001 Executive Blvd., Room 6138, MSC 9606, Bethesda, MD 20892–9606, 301–443–6470.

(Catalogue of Federal Domestic Assistance Program Nos. 93.242, Mental Health Research Grants; 93.281, Scientist Development Award, Scientist Development Award for Clinicians, and Research Scientist Award; 93.282, Mental Health National Research Service Awards for Research Training, National Institutes of Health, HHS)

Dated: June 28, 1999.

Anna Snouffer,

Acting Director, Office of Federal Advisory Committee Policy, NIH.

[FR Doc. 99–16888 Filed 7–1–99; 8:45 am]

BILLING CODE 4140–01–M

DEPARTMENT OF HEALTH AND HUMAN SERVICES

National Institutes of Health

National Institute of Mental Health; Amended Notice of Meeting

Notice is hereby given of a change in the meeting of the National Institute of Mental Health Special Emphasis Panel, July 19, 1999, 9:00 AM to July 19, 1999, 2:00 PM, Double Tree Hotel, 1750 Rockville Pike, Rockville, MD, 20852 which was published in the **Federal Register** on June 21, 1999, 64 FR 33107.

The meeting will be held at the same time but will now be at the Holiday Inn Bethesda, 8120 Wisconsin Avenue, Bethesda, MD 20814. The meeting is closed to the public.

Dated: June 28, 1999.

Anna Snouffer,

Acting Director, Office of Federal Advisory Committee Policy, NIH.

[FR Doc. 99–16889 Filed 7–1–99; 8:45 am]

BILLING CODE 4140–01–M

DEPARTMENT OF HEALTH AND HUMAN SERVICES

National Institutes of Health

National Institute of Diabetes and Digestive and Kidney Diseases; Notice of Closed Meetings

Pursuant to section 10(d) of the Federal Advisory Committee Act, as amended (5 U.S.C. Appendix 2), notice is hereby given of the following meetings.

The meetings will be closed to the public in accordance with the provisions set forth in sections 552b(c)(4) and 552b(c)(6), Title 5 U.S.C., as amended. The grant applications and the discussions could disclose confidential trade secrets or commercial property such as patentable material, and personal information concerning individuals associated with the grant applications, the disclosure of which would constitute a clearly unwarranted invasion of personal privacy.

Name of Committee: National Institute of Diabetes and Digestive and Kidney Diseases Special Emphasis Panel, ZDK1 GRB–06 01 S.
Date: July 26–27, 1999.
Time: 8:00 am to 5:00 pm.
Agenda: To review and evaluate grant applications.
Place: Double Tree Hotel, 1750 Rockville Pike, Rockville, MD 20852.
Contact Person: Neal A. Musto, PhD, Scientific Review Administrator, Review Branch, DEA, NIDDK, Natcher Building, Room 6AS–37A, National Institutes of Health, Bethesda, MD 20892–6600, (301) 594–7798.

Name of Committee: National Institute of Diabetes and Digestive and Kidney Diseases Special Emphasis Panel, ZDK1 GRB–2 02.
Date: August 6, 1999.
Time: 11:00 am to 12:00 pm.
Agenda: To review and evaluate grant applications.
Place: National Institutes of Health, Natcher Bldg., 45 Center Drive, Room 6AS–37, Bethesda, MD 20892 (Telephone Conference Call).
Contact Person: Shan S. Wong, PhD, Scientific Review Administrator, Review Branch, DEA, NIDDK, Natcher Building, Room 6 AS 25, National Institutes of Health, Bethesda, MD 20892, (301) 594–7797.

(Catalogue of Federal Domestic Assistance Program Nos. 93.847, Diabetes, Endocrinology and Metabolic Research; 93.848, Digestive Diseases and Nutrition Research; 93.849, Kidney Diseases, Urology and Hematology Research, National Institutes of Health, HHS)

Dated: June 28, 1999.

LaVerne Y. Stringfield,

Director, Office of Federal Advisory Committee Policy.

[FR Doc. 99–16891 Filed 7–1–99; 8:45 am]

BILLING CODE 4140–01–M

DEPARTMENT OF HEALTH AND HUMAN SERVICES

National Institutes of Health

National institute on Alcohol Abuse and Alcoholism; Notice of Closed Meeting

Pursuant to section 10(d) of the Federal Advisory Committee Act, as amended (5 U.S.C. Appendix 2), notice is hereby given of the following meetings.

The meetings will be closed to the public in accordance with the provisions set forth in sections 552b(c)(4) and 552b(c)(6), Title 5 U.S.C., as amended. The grant applications and the discussions could disclose confidential trade secrets or commercial property such as patentable material, and personal information concerning individuals associated with the grant applications, the disclosure of which would constitute a clearly unwarranted invasion of personal privacy.

Name of Committee: National Institute on Alcohol Abuse and Alcoholism Special Emphasis Panel, ZAA1 FF (05) Special Emphasis Panel.

Date: July 22–23, 1999.
Time: 8:00 am to 6:00 pm.
Agenda: To review and evaluate grant applications.
Place: Georgetown Holiday Inn, 2101 Wisconsin Avenue, NW, Washington, DC 20007.
Contact Person: M. Virginia Wills, Lead Grants Technical Assistant, Extramural Project Review Branch, National Institute on Alcohol Abuse and Alcoholism, National Institutes of Health, Suite 409, 6000 Executive Blvd. Bethesda, MD 20892–7003, 301–443–6106, vw21k@nih.gov.

Name of Committee: National Institute on Alcohol Abuse and Alcoholism Special Emphasis Panel August 10, 1999.
Time: 8:30 am to 6:00 pm.
Agenda: To review and evaluate grant applications.
Place: Double Tree Hotel, 1750 Rockville Pike, Rockville, MD 20852.
Contact Person: Ronald Suddendorf, Phd, Scientific Review Administrator, Extramural Project Review Branch, National Institute on Alcohol Abuse and Alcoholism, National Institutes of Health, Suite 409, 6000 Executive Boulevard, Bethesda, MD 20892–7003, 301–443–2926.

(Catalogue of Federal Domestic Assistance Program Nos. 93.271, Alcohol Research Career Development Awards for Scientists and Clinicians; 93.272, Alcohol National Research Awards for Research Training; 93.273, Alcohol Research Programs; 93.891, Alcohol Research Center Grants, National Institutes of Health, HHS)

Dated: June 28, 1999.

LaVerne Y. Stringfield,

Director, Office of Federal Advisory Committee Policy, NIH.

[FR Doc. 99–16892 Filed 7–1–99; 8:45 am]

BILLING CODE 4140–01–M

DEPARTMENT OF HEALTH AND HUMAN SERVICES

National Institutes of Health

National Institute of Diabetes and Digestive and Kidney Diseases; Notice of Closed Meetings

Pursuant to section 10(d) of the Federal Advisory Committee Act, as amended (5 U.S.C. Appendix 2), Notice is hereby given of the following meetings.

The meetings will be closed to the public in accordance with the provisions set forth in sections 552b(c)(4) and 552b(c)(6), Title 5 U.S.C., as amended. The grant applications and the discussions could disclose confidential trade secrets or commercial property such as patentable material, and personal information concerning individuals associated with the grant applications, the disclosure of which would constitute a clearly unwarranted invasion of personal privacy.

Name of Committee: National Institute of Diabetes and Digestive and Kidney Diseases Special Emphasis Panel, ZDK1 GRB–7 (03)P.
Date: July 19–20, 1999.
Time: July 19, 1999, 7:30 pm to Adjournment.
Agenda: To review and evaluate grant applications.
Place: Doubletree Guest Suites, 1300 Concorse Drive, Linthicum, Maryland 21090, MD 21090.
Contact Person: Lakshmanan Sankaran, Phd, Scientific Review Administrator, Review Branch, DEA, NIDDK, Natcher Building, Room 6AS–37, National Institutes of Health, Bethesda, MD 20892–6600, (301) 594–7799.

Name of Committee: National Institute of Diabetes and Digestive and Kidney Diseases Special Emphasis Panel, ZDK1 GRB–8(03)P.
Date: August 2–4, 1999.
Time: August 2, 1999, 7:00 pm to Adjournment.
Agenda: To review and evaluate grant applications.
Place: Vernon Manor Hotel, 400 Oak Street, Cincinnati, OH 45219.
Contact Person: Roberta J. Haber, Phd, Scientific Review Administrator, Review Branch, DEA, NIDDK, Natcher Building, Room 6AS–25N, National Institutes of Health, Bethesda, MD 20892, (301) 594–8898.

(Catalogue of Federal Domestic Assistance Program Nos. 93.847, Diabetes, Endocrinology and Metabolic Research; 93.848, Digestive Diseases and Nutrition Research; 93.849, Kidney Diseases, Urology and Hematology Research, National Institutes of Health, HHS)

Dated: June 28, 1999.

LaVerne Y. Stringfield,

Director, Office of Federal Advisory Committee Policy.

[FR Doc. 99–16893 Filed 7–1–99; 8:45 am]

BILLING CODE 4140–01–M

DEPARTMENT OF HEALTH AND HUMAN SERVICES

National Institutes of Health

Center for Scientific Review; Notice of Closed Meetings

Pursuant to section 10(d) of the Federal Advisory Committee Act, as amended (5 U.S.C. Appendix 2), notice hereby given of the following meetings.

The meetings will be closed to the public in accordance with the provisions set forth in sections 552b(c)(4) and 552b(c)(6), Title 5 U.S.C., as amended. The grant applications and the discussions could disclose confidential trade secrets or commercial property as patentable material, and personal information concerning individuals associated with the grant applications, the disclosure of which would constitute a clearly unwarranted invasion of personal privacy.

Name of Committee: Center for Scientific Review Special Emphasis Panel.
Date: June 29, 1999.
Time: 12:00 p.m. to 2:00 p.m.
Agenda: To review and evaluate grant applications.
Place: NIH, Rockledge 2, Bethesda, MD 20892 (Telephone Conference Call).
Contact Person: J. Terrell Hoffeld, Scientific Review Administrator, Center for Scientific Review, National Institutes of Health, 6701 Rockledge Drive, Room 4116, MSC 7816, Bethesda, MD 20892, (301) 435–1781.
This notice is being published less than 15 days prior to the meeting due to the timing limitations imposed by the review and funding cycle.

Name of Committee: Center for Scientific Review Special Emphasis Panel.
Date: July 7, 1999.
Time: 8:00 a.m. to 6:00 p.m.
Agenda: To review and evaluate grant applications.
Place: Westin Grand Hotel, 2350 M Street, NW, Washington, DC 20037–1417.
Contact Person: Marjam G. Behar, Scientific Review Administrator, Center for Scientific Review, National Institutes of Health, 6701 Rockledge Drive, Room 4178, MSC 7806, Bethesda, MD 20892, (301) 435–1180.
This notice is being published less than 15 days prior to the meeting due to the timing limitations imposed by the review and funding cycle.

Name of Committee: Center for Scientific Review Special Emphasis Panel.
Date: July 7, 1999.
Time: 9:00 a.m. to 5:00 p.m.
Agenda: To review and evaluate grant applications.
Place: Hyatt Regency Hotel, One Bethesda Metro Center, Bethesda, MD 20814.
Contact Person: Richard Marcus, Scientific Review Administrator, Center for Scientific Review, National Institutes of Health, 6701 Rockledge Drive, Room 5168, MSC 7844, Bethesda, MD 20892, (301) 435–1245, richard.marcus@nih.gov.
This notice is being published less than 15 days prior to the meeting due to the timing limitations imposed by the review and funding cycle.

Name of Committee: Center for Scientific Review Special Emphasis Panel.
Date: July 7–9, 1999.
Time: 7:00 p.m. to 12:01 p.m.
Agenda: To review and evaluate grant applications.
Place: Wyndham Garden Hotel, University Place, 3454 Forbes Avenue, Pittsburgh, PA 15213.
Contact Person: Arnold Revzin, Scientific Review Administrator, Center for Scientific Review, National Institutes of Health, 6701 Rockledge Drive, Room 4192, MSC 7806, Bethesda, MD 20892, (301) 435–1153.
This notice is being published less than 15 days prior to the meeting due to the timing limitations imposed by the review and funding cycle.

Name of Committee: Center for Scientific Review Special Emphasis Panel (SSS–Z).
Date: July 8–9, 1999.

Time: 8:00 a.m. to 4:00 p.m.
Agenda: To review and evaluate grant applications.
Place: Georgetown Suites Hotel-Harbor Building, 1000 29th Street NW, Washington, DC 20007.
Contact Person: Ron Manning, Scientific Review Administrator, Center for Scientific Review, National Institutes of Health, 6701 Rockledge Drive, Room 4158, MSC 7806, Bethesda, MD 20892, (301) 435–1723.
This notice is being published less than 15 days prior to the meeting due to the timing limitations imposed by the review and funding cycle.

Name of Committee: Center for Scientific Review Special Emphasis Panel. ZRG1–02(01)
Date: July 8–9, 1999.
Time: 8:00 a.m. to 12:45 p.m.
Agenda: To review and evaluate grant applications.
Place: Hyatt Regency Hotel, One Bethesda Metro Center, Bethesda, MD 20814.
Contact Person: Sami A. Mayyasi, Scientific Review Administrator, Center for Scientific Review, National Institutes of Health, 6701 Rockledge Drive, Room 5112, MSC 7852, Bethesda, MD 20892, (301) 435–1169.
This notice is being published less than 15 days prior to the meeting due to the timing limitations imposed by the review and funding cycle.

Name of Committee: Center for Scientific Review Special Emphasis Panel.
Date: July 8–9, 1999.
Time: 8:30 a.m. to 12:00 p.m.
Agenda: To review and evaluate grant applications.
Place: Embassy Suites, Chevy Chase Pavilion, 4300 Military Rd., Wisconsin at Western Ave., Washington, DC 20015.
Contact Person: Sandy Warren, Scientific Review Administrator, Center for Scientific Review, National Institutes of Health, 6701 Rockledge Drive, Room 5134, MDC 7840, Bethesda, MD 20892, (301) 435–1019.
This notice is being published less than 15 days prior to the meeting due to the timing limitations imposed by the review and funding cycle.

Name of Committee: Center for Scientific Review Special Emphasis Panel.
Date: July 8–9, 1999.
Time: 8:30 a.m. to 5:00 p.m.
Agenda: To review and evaluate grant applications.
Place: Holiday Inn Georgetown, 2101 Wisconsin Avenue, NW, Washington, DC 20007.
Contact Person: Jean Hickman, Scientific Review Administrator, Center for Scientific Review, National Institutes of Health, 6701 Rockledge Drive, Room 4194, MSC 7808, Bethesda, MD 20892, (301) 435–1146.
This notice is being published less than 15 days prior to the meeting due to the timing limitations imposed by the review and funding cycle.

Name of Committee: Center for Scientific Review Special Emphasis Panel ZRG1–SSS–D (01).
Date: July 8, 1999.
Time: 8:30 a.m. to 5:00 p.m.
Agenda: To review and evaluate grant applications.
Place: Chevy Chase Holiday Inn, 5520 Wisconsin Ave., Chevy Chase, MD 20815.
Contact Person: Michael Micklin, Scientific Review Administrator, Center for Scientific Review, National Institutes of Health, 6701 Rockledge Drive, Room 3154, MSC 7848, Bethesda, MD 20892, (301) 435–1258, micklinm@csr.nih.gov.
This notice is being published less than 15 days prior to the meeting due to the timing limitations imposed by the review and funding cycle.

Name of Committee: Center for Scientific Review Special Emphasis Panel.
Date: July 8, 1999.
Time: 8:30 a.m. to 6:00 p.m.
Agenda: To review and evaluate grant applications.
Place: Governor's House Hotel, Washington, DC 20036.
Contact Person: Robert Weller, Scientific Review Administrator, Center for Scientific Review, National Institutes of Health, 6701 Rockledge Drive, Room 3160, MSC 7770, Bethesda, MD 20892, (301) 435–0694.
This notice is being published less than 15 days prior to the meeting due to the timing limitations imposed by the review and funding cycle.

Name of Committee: Center for Scientific Review Special Emphasis Panel.
Date: July 8–9, 1999.
Time: 8:30 a.m. to 4:00 p.m.
Agenda: To review and evaluate grant applications.
Place: Latham Hotel Georgetown, 3000 M Street, NW, Washington, DC 20007.
Contact Person: John L. Bowers, Scientific Review Administrator, Center for Scientific Review, National Institutes of Health, 6701 Rockledge Drive, Room 4168, MSC 7806, Bethesda, MD 20892, (301) 435–1725.
This notice is being published less than 15 days prior to the meeting due to the timing limitations imposed by the review and funding cycle.

Name of Committee: Center for Scientific Review Special Emphasis Panel.
Date: July 8, 1999.
Time: 5:00 p.m. to 6:00 p.m.
Agenda: To review and evaluate grant applications.
Place: Chevy Chase Holiday Inn, 5520 Wisconsin Ave., Chevy Chase, MD 20815.
Contact Person: Chhanda L. Ganguly, Scientific Review Administrator, Center for Scientific Review, National Institutes of Health, 6701 Rockledge Drive, Room 5156, MSC 7842, Bethesda, MD 20892, (301) 435–1739.
This notice is being published less than 15 days prior to the meeting due to the timing limitations imposed by the review and funding cycle.

Name of Committee: Center for Scientific Review Special Emphasis Panel, ZRG1–SSS–D (02).
Date: July 9, 1999.
Time: 8:30 a.m. to 5:00 p.m.
Agenda: To review and evaluate grant applications.
Place: Chevy Chase Holiday Inn, 5520 Wisconsin Ave., Chevy Chase, MD 20815.
Contact Person: Michael Micklin, Scientific Review Administrator, Center for Scientific Review, National Institutes of Health, 6701 Rockledge Drive, Room 3154, MSC 7848, Bethesda, MD 20892, (301) 435–1258, micklinm@csr.nih.gov.
This notice is being published less than 15 days prior to the meeting due to the timing limitations imposed by the review and funding cycle.

Name of Committee: Center for Scientific Review Special Emphasis Panel.
Date: July 9, 1999.
Time: 8:30 a.m. to 4:00 p.m.
Agenda: To review and evaluate grant applications.
Place: Chevy Chase Holiday Inn, 5520 Wisconsin Ave., Chevy Chase, MD 20815.
Contact Person: Chhanda L. Ganguly, Scientific Review Administrator, Center for Scientific Review, National Institutes of Health, 6701 Rockledge Drive, Room 5156, MSC 7842, Bethesda, MD 20892, (301) 435–1739.
This notice is being published less than 15 days prior to the meeting due to the timing limitations imposed by the review and funding cycle.

Name of Committee: Center for Scientific Review Special Emphasis Panel, ZRG1 AARR–3 (01).
Date: July 9, 1999.
Time: 8:30 a.m. to 5:30 p.m.
Agenda: To review and evaluate grant applications.
Place: Hyatt Regency Hotel, One Bethesda Metro Center, Bethesda, MD 20814.
Contact Person: Mohindar Poonian, Scientific Review Administrator, Center for Scientific Review, National Institutes of Health, 6701 Rockledge Drive, Room 5222, MSC 7852, Bethesda, MD 20892, (301) 435–1168, poonianm@csr.nih.gov.
This notice is being published less than 15 days prior to the meeting due to the timing limitations imposed by the review and funding cycle.

Name of Committee: Center for Scientific Review Special Emphasis Panel.
Date: July 9, 1999.
Time: 10:00 a.m. to 5:00 p.m.
Agenda: To review and evaluate grant applications.
Place: Holiday Inn—Crystal City, 1489 Jefferson Davis Highway, Arlington, VA 22202.
Contact Person: Garrett V. Keefer, Scientific Review Administrator, Center for Scientific Review, National Institutes of Health, 6701 Rockledge Drive, Room 4190, MSC 7808, Bethesda, MD 20892, (301) 435–1152.
This notice is being published less than 15 days prior to the meeting due to the timing limitations imposed by the review and funding cycle.

Name of Committee: Center for Scientific Review Special Emphasis Panel.
Date: July 9, 1999.
Time: 1:00 p.m. to 2:00 p.m.
Agenda: To review and evaluate grant applications.
Place: NIH, Rockledge 2, Bethesda, MD 20892 (Telephone Conference Call).
Contact Person: Calbert Laing, Scientific Review Administrator, Center for Scientific

Review, National Institutes of Health, 6701 Rockledge Drive, Room 4210, MSC 7812, Bethesda, MD 20892, (301) 435–1221.

This notice is being published less than 15 days prior to the meeting due to the timing limitations imposed by the review and funding cycle.

Name of Committee: Center for Scientific Review Special Emphasis Panel.

Date: July 9, 1999.

Time: 1:00 p.m. to 3:00 p.m.

Agenda: To review and evaluate grant applications.

Place: Hyatt Regency Hotel, One Bethesda Metro Center, Bethesda, MD 20814.

Contact Person: Sami A. Mayyasi, Scientific Review Administrator, Center for Scientific Review, National Institutes of Health, 6701 Rockledge Drive, Room 5112, MSC 7852, Bethesda, MD 20892, (301) 435–1169.

This notice is being published less than 15 days prior to the meeting due to the timing limitations imposed by the review and funding cycle.

Name of Committee: Center for Scientific Review Special Emphasis Panel.

Date: July 9, 1999.

Time: 3:30 p.m. to 5:00 p.m.

Agenda: To review and evaluate grant applications.

Place: NIH, Rockledge 2, Bethesda, MD 20892 (Telephone Conference Call).

Contact Person: Alec S. Liacouras, Scientific Review Administrator, Center for Scientific Review, National Institutes of Health, 6701 Rockledge Drive, Room 5154, MSC 7842, Bethesda, MD 20892, (301) 435–1740.

This notice is being published less than 15 days prior to the meeting due to the timing limitations imposed by the review and funding cycle.

Name of Committee: Center for Scientific Review Special Emphasis Panel, ZRG–1 AARR–3 (02).

Date: July 10, 1999.

Time: 8:30 a.m. to 5:30 p.m.

Agenda: To review and evaluate grant applications.

Place: Hyatt Regency Hotel, One Bethesda Metro Center, Bethesda, MD 20814.

Contact Person: Mohindar Poonian, Scientific Review Administrator, Center for Scientific Review, National Institutes of Health, 6701 Rockledge Drive, Room 5222, MSC 7852, Bethesda, MD 20892, 301–435–1168, poonianm@csr.nih.gov.

This notice is being published less than 15 days prior to the meeting due to the timing limitations imposed by the review and funding cycle.

(Catalogue of Federal Domestic Assistance Program Nos. 93.306, Comparative Medicine, 93.306; 93.333, Clinical Research, 93.333, 93.337, 93.393–93.396, 93.837–93.844, 93.846–93.878, 93.892, 93.893, National Institutes of Health, HHS)

Dated: June 28, 1999.

Anna Snouffer,

Acting Committee Management Officer, NIH.

[FR Doc. 99–16887 Filed 7–1–99; 8:45 am]

BILLING CODE 4140–01–M

DEPARTMENT OF HEALTH AND HUMAN SERVICES

National Institutes of Health

Prospective Grant of Co-Exclusive License: Prodrug Forms of the Anti-Cancer Agent 9-β-D-Arabinofuranosyl-2-Fluoroadenine as Therapeutics for the Treatment of Cancers and Leukemia

AGENCY: National Institutes of Health, Public Health Service, DHHS.

ACTION: Notice.

SUMMARY: This is notice, in accordance with 35 U.S.C. 209(c)(1) and 37 CFR 404.7(a)(1)(i), that the National Institutes of Health (NIH), Department of Health and Human Services, is contemplating the grant of a worldwide co-exclusive license to practice the invention embodied in U.S. Patent 4,357,324, issued November 2, 1982 and entitled ''Prodrug Derivatives 9-β-D-arabinofuranosyl-2-fluoroadenine'', to Ash Stevens, Inc., having a place of business in Detroit, Michigan. The patent rights in these inventions have been assigned to the United States of America.

A co-exlusive license had been granted to Schering AG and its U.S. affiliate, Berlex Laboratories, Inc. in January 1984. PHS intends to grant one additional co-exclusive license to these patent rights.

The field of use may be limited to the development of therapeutics for the treatment of cancers and leukemia.

DATES: Only written comments and/or application for a license which are received by the NIH Office of Technology Transfer on or before August 31, 1999 will be considered.

ADDRESSES: Requests for a copy of the patent, inquiries, comments, and other materials relating to the contemplated license should be directed to: Girish C. Barua, PhD., Office of Technology Transfer, National Institutes of Health, 6011 Executive Boulevard, Suite 325, Rockville, MD 20852–3804; Telephone: (301) 496–7057, ext. 263; Facsimile: (301) 402–0220; E-mail' BaruaG@od.nih.gov.

SUPPLEMENTARY INFORMATION: This invention involves the preparation of the 5′-formate and the 5′-phosphate derivatives of 9-β-D-arabinofuranosyl-2-fluoroadenine as prodrug forms of the anti-cancer agent 9-β-D-arabinofuranosyl-2-fluoroadenine, known as F-ara-A. These derivatives are quite water soluble whereas F-ara-A itself is sparingly soluble in water or in any organic solvents. Delivery of these prodrug forms to mice with L1210 leukemia results in the formation of higher levels of the triphosphate of F-ara-A, the active form of the drug, in the target L1210 leukemia cells. These prodrug forms are much more active chemotherapeutically than 9-β-D-arabinofuranosyl, known as ara-A, and equivalent in activity to the combination of ara-A and 2-deoxycoformycin, known as 2′-dCF, an effective in vivo inhibitor of adenosine deaminase, a ubiquitous enzyme that destroys ara-A in vivo.

The prospective co-exclusive license will be royalty-bearing and will comply with the terms and conditions of 35 U.S.C. 209 and 37 CFR 404.7 The prospective co-exclusive license may be granted unless, within 60 days from the date of this published Notice, NIH receives written evidence and argument that establishes that the grant of the license would not be consistent with the requirements of 35 U.S.C. 209 and 37 CFR 404.7.

Properly filed competing applications for a license filed in response to this notice will be treated as objections to the contemplated license. Comments and objections submitted in response to this notice will not be made available for public inspection, and to the extent permitted by law, will not be released under the Freedom of Information Act, 5 U.S.C. 552.

Dated: June 25, 1999.

Jack Spiegel,

Director, Division of Technology Development and Transfer, Office of Technology Transfer, National Institutes of Health.

[FR Doc. 99–16895 Filed 7–1–99; 8:45 am]

BILLING CODE 4140–01–M

DEPARTMENT OF HOUSING AND URBAN DEVELOPMENT

[Docket No. FR–4432–N–26]

Federal Property Suitable as Facilities To Assist the Homeless

AGENCY: Office of the Assistant Secretary for Community Planning and Development, HUD.

ACTION: Notice.

SUMMARY: This Notice identifies unutilized, underutilized, excess, and surplus Federal property reviewed by HUD for suitability for possible use to assist the homeless.

EFFECTIVE DATE: July 2, 1999.

FOR FURTHER INFORMATION CONTACT: Mark Johnston, Department of Housing and Urban Development, Room 7256, 451 Seventh Street SW, Washington, DC 20410; telephone (202) 708–1226; TTY number for the hearing- and speech-

impaired (202) 708–2565, (these telephone numbers are not toll-free), or call the toll-free Title V information line at 1–800–927–7588.

SUPPLEMENTARY INFORMATION: In accordance with the December 12, 1988 court order in *National Coalition for the Homeless* v. *Veterans Administration*, No. 88–2503–OG (D.D.C.), HUD publishes a Notice, on a weekly basis, identifying unutilized, underutilized, excess and surplus Federal buildings and real property that HUD has reviewed for suitability for use to assist the homeless. Today's Notice is for the purpose of announcing that no additional properties have been determined suitable or unsuitable this week.

Dated: June 24, 1999.

Fred Karnas, Jr.,

Deputy Assistant Secretary for Economic Development.

[FR Doc. 99–16585 Filed 7–1–99; 8:45 am]

BILLING CODE 4210–29–M

DEPARTMENT OF THE INTERIOR

Office of the Assistant Secretary for Water and Science; Notice of Intent To Contract for Hydroelectric Power Development at the Jordan Aqueduct, Reach 4, Flow Control Structure (Jordan Aqueduct) and at Jordanelle Dam, Features of the Central Utah Project (CUP), Utah

AGENCY: Office of the Assistant Secretary for Water and Science, Department of the Interior.

ACTION: Notice of intent to accept proposals, select one or more lessees, and contract for hydroelectric power development at Jordanelle Dam and Jordan Aqueduct.

SUMMARY: Current Federal policy encourages non-Federal development of electrical power resource potential on Federal water resource projects. The Department of the Interior (Interior), in consultation with the Department of Energy, Western Area Power Administration (Western), will consider proposals for non-Federal development of hydroelectric power at Jordanelle Dam and Jordan Aqueduct of the CUP, Utah. Interior is considering such hydroelectric power development under a lease of power privilege. No Federal funds will be available for such hydroelectric power development. Western would have the first opportunity to purchase and/or market the power that would be generated by such development under a lease of power privilege. The CUP is a Federal Bureau of Reclamation (Reclamation) project. This notice presents background information, proposal content guidelines, information concerning selection of one or more non-Federal entities to develop hydroelectric power at Jordanelle Dam and on the Jordan Aqueduct, and power purchasing and/or marketing considerations. Interested entities are invited to submit on one or both of these projects. That is, Interior will consider proposals by interested entities on only Jordanelle Dam, on only Jordan Aqueduct, or on both projects.

DATES: A written proposal and seven copies must be submitted on or before 5:00 p.m. (MST), on January 7, 2000, to: Mr. Ronald Johnston, Program Director, Central Utah Project Completion Act, Department of the Interior, 302 East 1860 South, Provo UT 84606–7317, Telephone: (801) 379–1103.

A proposal will be considered timely only if it is received in the office of the Program Director by or before 5:00 p.m. on the designated date. Interested entities are cautioned that delayed delivery to this office due to failures or misunderstandings of the entity and/or of mail, overnight, or courier services will not excuse lateness and, accordingly, are advised to provide sufficient time for delivery. Late proposals will not be considered.

A copy of the proposal should also be sent at or about the time it is due at Interior to: Mr. Dave Sabo, CRSP Manager, Western Area Power Administration, 257 East 200 South, Suite 475, Salt Lake City UT 84111–0606.

FOR FURTHER INFORMATION: Contact Technical data may be obtained at the address and telephone number set forth below:

Mr. Ronald Johnston, Program Director, Central Utah Project Completion Act, Department of the Interior, 302 East 1860 South, Provo UT 84606–7317, Telephone: (801) 379–1103

Interior will be available to meet with interested entities only upon written request to the Program Director at the above address. Interior reserves the right to schedule a single meeting and/or visit to address at once the questions of all entities that have submitted questions or requested site visits.

Information related to Western's purchasing and/or marketing the power may be obtained at the address and telephone number set forth below:

Mr. Dave Sabo, CRSP Manager, Western Area Power Administration, 257 East 200 South, Suite 475, Salt Lake City UT 84111–0606, Telephone: (801) 524–6372

Information related to the operation and maintenance of Jordanelle Dam and Jordan Aqueduct may be obtained at the address and telephone number set forth below:

Mr. Rich Tullis, Central Utah Water Conservancy District, 355 West University Parkway, Orem UT 84058–7303, (801) 226–7122

Background Information

The CUP, Bonneville Unit, located in northern Utah, was authorized for construction, including hydroelectric power, by the Colorado River Storage Project (CRSP) Act of April 11, 1956 (ch. 203, 70 Stat. 105) (CRSP Act). The United States constructed Jordanelle Dam and Jordan Aqueduct under the CRSP Act. The Central Utah Project Completion Act (CUPCA), comprised of Titles II–VI of the Act of October 30, 1992 (106 Stat. 4600, Pub. L. 102–575) authorized the construction of other features of the Bonneville Unit. Section 208 of the CUPCA provides that power generation facilities associated with the CUP be developed and operated in accordance with the CRSP Act, which explicitly embodies all Reclamation law except as otherwise provided in the CRSP Act. The Central Utah Water Conservancy District (District), under its contracts with the United States, has certain operation, maintenance, replacement, and repayment responsibilities and obligations concerning the Bonneville Unit, which includes such responsibility for Jordanelle Dam and Jordan Aqueduct. The District has contracted with the Salt Lake County Water Conservancy District for the operation and maintenance of Jordan Aqueduct.

Interior, in consultation with Western, is considering hydroelectric power development at Jordanelle Dam and the Jordan Aqueduct through one or more leases of power privilege. A lease of power privilege is an alternative to Federal hydroelectric power development. A lease of power privilege grants to a non-Federal entity the right to utilize, consistent with CUP purposes, water power head or storage at and/or operationally in conjunction with the CUP, for non-Federal electric power generation and sale by the entity. Leases of power privilege have terms not to exceed 40 years. The general authority for lease of power privilege under Reclamation law includes, among others, the Town Sites and Power Development Act of 1906 (43 U.S.C. §522) and the Reclamation Project Act of 1939 (43 U.S.C. 485h(c)) (1939 Act). Interior will be the lead Federal agency for ensuring compliance with the

National Environmental Policy Act (NEPA) of any lease of power privilege considered in response to this notice. Leases of power privilege may be issued only when Interior, upon completion of the NEPA process, determines that the affected hydroelectric power sites are environmentally acceptable. Any lease of power privilege at either Jordanelle Dam or Jordan Aqueduct must accommodate existing contractual commitments related to operation and maintenance of such existing facilities. The lessee (i.e., successful proposing entity) would be required to enter into a contract with the District to coordinate operation and maintenance of any proposed hydropower developments with existing Federal features.

Western would have the first opportunity to purchase and/or market the power that would be generated under any lease of power privilege. Under this process, Western would either purchase and market the power as Salt Lake City Area—Integrated Projects (SLCA–IP) power or market the power independently by first offering it to preference entities and secondly to non-preference entities.

All costs incurred by the United States related to development and operation and maintenance under a lease of power privilege, including NEPA compliance and development of the lease of power privilege, would be the expense of the lessee. In addition, the lessee would be required to make annual payments to the United States for the use of a Government facility. This amount will be at least 1 mill per kilowatt-hour but not more than 3 mills per kilowatt-hour of generation, depending on the economic capability of the proposed hydropower development. Such annual payments to the United States would be deposited as a credit to the Upper Colorado River Basin Fund.

Proposal Content Guidelines

Interested parties should submit one or more proposals explaining in as precise detail as is practicable how the hydropower potential at each site would be developed. As noted, proposals may be submitted for one or both sites (i.e., Jordan Aqueduct or Jordanelle Dam or both). If proposals are submitted for both sites, they must be submitted as independent proposals. Factors which a proposal should consider and address include, but are not limited to, the following:

A. Provide all information relevant to the qualifications of the proposing entity to plan and implement such a project, including, but not limited to, information about preference status, type of organization, length of time in business, experience in funding, design and construction of similar projects, industry rating(s) that indicate financial soundness and/or technical and managerial capability, experience of key management personnel, history of any reorganizations or mergers with other companies, and any other information that demonstrates the interested entity's organizational, technical and financial ability to perform all aspects of the work. Include a discussion of past experience in operating and maintaining similar facilities and provide references as appropriate. The term ''preference entity,'' as applied to a lease of power privilege, means an entity qualifying for preference under Section 9c of the 1939 Act, as a municipality, public corporation or agency, or cooperative or other nonprofit organization financed in whole or in part by loans made pursuant to the Rural Electrification Act of 1936, as amended.

B. Provide geographical locations and describe principal structures and other important features of the proposed development including roads and transmission lines. Estimate and describe installed capacity and the capacity of the power facilities under dry, average, and wet hydrological conditions. Also describe seasonal or annual generation patterns. Include estimates of the amount of electrical energy that would be produced from each facility for each month of average, dry, and wet water years. If capacity and energy can be delivered to another location, either by the proposing entity or by potential wheeling agents, specify where capacity and energy can be delivered. Include concepts for power sales and contractual arrangements, involved parties and the proposed approach to wheeling if required.

C. Indicate title arrangements and the ability for acquiring title to or the right to occupy and use lands necessary for the proposed development(s), including such additional lands as may be required during construction.

D. Identify water rights applicable to the operation of the proposed development(s), the holder of such rights, and how these rights would be acquired or perfected.

E. Discuss any studies necessary to adequately define impacts on the CUP and the environment of the development. Describe any significant environmental issues associated with the development and the proposing entity's approach for gathering relevant data and resolving such issues to protect and enhance the quality of the environment. Explain any proposed use of the hydropower development for conservation and utilization of the available water resources in the public interest.

F. Describe anticipated contractual arrangements with the entity or entities having operation and maintenance responsibility for the CUP feature(s) that are proposed for utilization in the hydropower development under consideration. Define how the hydropower development would operate in harmony with the CUP and existing applicable contracts related to operation and maintenance of CUP feature(s) being considered for modification.

G. Identify the organizational structure planned for the long-term operation and maintenance of any proposed hydropower development.

H. Provide a management plan to accomplish such activities as planning, NEPA compliance, lease of power privilege development, design, construction, facility testing, and start of hydropower production. Prepare schedules of these activities as is applicable. Describe what studies are necessary to accomplish the hydroelectric power development and how the studies would be implemented.

I. Estimate development cost. This cost should include all investment costs such as the cost of studies to determine feasibility, NEPA compliance, design, construction, and financing as well as the amortized annual cost of the investment; also, the annual operation, maintenance, and replacement expense for the hydropower development; lease payments to the United States; and expenses that may be associated with the CUP. If there are additional transmission or wheeling expenses associated with the development of the hydropower development, these should be included. Identify proposed methods of financing the hydropower development. An economic analysis should be presented that compares the present worth of all benefits and costs of the hydropower development.

Selection of Lessee

Interior, in consultation with Western, will evaluate proposals received in response to this published notice.

Interior will give more favorable consideration to proposals that (1) are well-adapted to developing, conserving, and utilizing the water and natural resources, (2) clearly demonstrate that the offeror is qualified to develop the hydropower facility and provide for long-term operation and maintenance, and (3) develop the hydropower potential economically. A proposal will be deemed unacceptable if it is inconsistent with CUP purposes, as

determined by Interior. Interior will give preference to those entities that qualify as preference entities (as defined under PROPOSAL CONTENT GUIDELINES, item A.) provided that their proposal is at least as well-adapted to developing, conserving, and utilizing the water and natural resources as other submitted proposals and that the preference entity is well qualified. Preference entities would be allowed 90 days to improve their proposals, if necessary, to be made at least equal to a proposal(s) that may have been submitted by a non-preference entity.

Power Purchasing and/or Marketing Considerations

Western would have the first opportunity to purchase and/or market the power that would be generated by the project under a lease(s) of power privilege. Western will consult with Interior on such power purchasing and/or marketing considerations.

Western may market the power available from the project as part of its Salt Lake City Area Integrated Projects (SLCA/IP) or on a stand-alone basis, first to preference entities qualified under criteria established by Western and second to non-preference entities, by developing an individual marketing plan for this power. This marketing plan would be developed through a separate subsequent public process beginning with a notice in the **Federal Register** of Western's intent to market the power. The marketing plan would include all aspects of marketing the power, including assignment of power to qualified preference and/or non-preference entities, pricing, transmission, and delivery of power. Western would recover the costs it would incur in purchasing and/or marketing the power through the rates charged for the power. Firm power rates would be established through a public process, initiated by a notice in the **Federal Register**, separate from the marketing plan.

In the event Western elects to not purchase and/or market the power generated by the hydropower development or such a decision cannot be made prior to execution of the lease of power privilege, the lessee(s) would be responsible for marketing the power generated by the Project with priority given to preference entities as heretofore defined in PROPOSAL CONTENT GUIDELINES, item A.

Notice and Time Period To Enter Into Lease of Power Privilege

Interior will notify, in writing, all entities submitting proposals of Interior's decision regarding selection of the potential lessee(s). The selected potential lessee(s) will have five years from the date of such notification to enter into a lease(s) of power privilege for the site or sites identified in the proposal. Such lease(s) of power privilege will state whether and how Western will be involved in purchasing and/or marketing the power. Any excessive delay resulting from compliance with the provisions of Federal environmental laws or administrative review by a Federal agency, pertaining to the project, may extend the five year time period for a period equal to that of the delay. In the event of litigation related to the proposed project, the five year time period will be extended for a period equal to that of the delay, provided such litigation was initiated by parties other than the selected potential lessee(s) or its employees, officers, agents, assigns, shareholders, customers or persons or groups served by or in privity with the potential lessee(s).

Dated: June 28, 1999.

Ronald Johnston,

CUPCA Program Director, Department of the Interior.

[FR Doc. 99–16852 Filed 7–1–99; 8:45 am]

BILLING CODE 4310–RK–P

DEPARTMENT OF THE INTERIOR

Fish and Wildlife Service

Endangered Species Permit Applications

AGENCY: Fish and Wildlife Service, Interior.

ACTION: Notice of receipt of permit applications.

SUMMARY: The following applicants have applied for a scientific research permit to conduct certain activities with endangered species pursuant to section 10 (a)(1)(A) of the Endangered Species Act of 1973, as amended (16 USC 1531 *et seq.*).

Permit No. TE–011504–0

Applicant: Fred T. Sproul, Ramona, California.

The applicant requests a permit to take (collect; sacrifice) the San Diego fairy shrimp (*Brachinecta sandiegoensis*) and Riverside fairy shrimp (*Streptocephaalus wootoni*) and remove and reduce to possession the San Diego mesa mint (*Pogogyne abramsii*), Otay mesa mint (*Pogogyne nudiscula*), San Diego button celery (*Eryngium aristulatum var. parishii*), Del Mar manzanita (*Arctostaphylos glandulosa ssp. crassifolia*), Orcutts spineflower (*Chorizanthe orcuttiana*), slender-horned spineflower (*Dodecahema leptoceres*), and Santa Ana woolly-star (*Eriastrum densifolium ssp. sanctorum*) in conjunction with presence or absence surveys and scientific studies throughout each species range in California, Arizona, and Nevada, for the purpose of enhancing their survival.

Permit No. TE–816204–0

Applicant: Douglas Kelt, University of California, Davis, California.

The permittee requests a permit amendment to take (radio collar, track with thread) the Stephen's kangaroo rat (*Dipodomis stephensi*) at the Southwestern Riverside County Multi-Species Reserve, Riverside County, California, in conjunction with scientific research for the purpose of enhancing its survival.

Permit No. TE–012137–0

Applicant: Department of the Army, Fort Hunter Liggett, California.

The applicant requests a permit to take (collect, sacrifice) Conservancy fairy shrimp (*Branchinecta conservatio*), longhorn fairy shrimp (*Branchinecta longiantenna*), and vernal pool tadpole shrimp (*Lepidurus packardi*) in conjuntion with surveys located at Fort Hunter Liggett, California, for the purpose of enhancing their survival.

Permit No. TE–802094–0

Applicant: Carl J. Page, Cotati, California

The permittee requests an amendment to take (collect) the tidewater goby (*Eucyclogobius newberryi*) for age-class analysis throughout the species range for the purpose of enhancing its survival.

Permit No. TE–013717–0

Applicant: Marco Metzger, Riverside, California

The applicant requests a permit to take (survey by pursuit) the Quino checkerspot butterfly (*Euphydryas editha quino*) and the Delhi Sands flower-loving fly (*Rhaphiomidas terminatus abdominalis*) in conjunction with presence or absence surveys throughout each species' range for the purpose of enhancing their survival.

Permit No. TE–012929–0

Applicant: James R. Malcolm, Redlands, California

The applicant requests a permit to take (harass by survey, collect for captive propagation, handle, and release) the unarmored threespine stickleback (*Gasterosteus aculeatus williamsoni*) in conjunction with presence and absence surveys and scientific research throughout the

species' range for the purpose of enhancing its survival.

Permit No. TE–787645–0

Applicant: Thomas Olsen Associates, Hemet, California.

The permittee requests a permit amendment to take (harass by survey) the southwestern willow flycatcher (*Empidonax traillii extimus*) in conjunction with presence and absence surveys throughout the species' range in Arizona for the purpose of enhancing its survival.

Permit No. TE–807073–0

Applicant: Shiela Conant, Honolulu, Hawaii.

The applicant requests a permit to: take (capture, band, measure, draw blood, remove feathers, and release) the Layson finch (*Telespyza cantans*); take (capture, band, measure, draw blood, and release) the Nihoa millerbird (*Acrocephalus familiaris kingi*); and take (capture, band, measure, and release) the Nihoa finch (*Telespyza ultima*) in conjunction with scientific studies throughout each species' range for the purpose of enhancing their survival. Some of these activities were previously authorized under subpermit CONAS–10.

Permit No. TE–012136–0

Applicant: Oregon Department of Environmental Quality, Portland, Oregon.

The applicant requests a permit to take (harass by survey, electroshock) the Oregon chub (*Oregonichthys crameri*) in conjunction with monitoring programs throughout the species range in Oregon for the purpose of enhancing its survival.

Permit No. TE–012632–0

Applicant: Gwynne Corrigan, University of California, Santa Cruz, California.

The applicant requests a permit to take (capture, collect tissue samples) the blunt-nosed leopard lizard (*Gambelia silus*) in conjunction with genetic research in the San Joaquin Valley, California, for the purpose of enhancing its survival.

DATES: Written comments on these permit applications must be received on or before August 2, 1999.

ADDRESSES: Written data or comments should be submitted to the Chief—Endangered Species, Ecological Services, Fish and Wildlife Service, 911 N.E. 11th Avenue, Portland, Oregon 97232–4181; Fax: (503) 231–6243. Please refer to the respective permit number for each application when submitting comments. All comments received, including names and addresses, will become part of the official administrative record and may be made available to the public.

FOR FURTHER INFORMATION CONTACT: Documents and other information submitted with these applications are available for review, subject to the requirements of the Privacy Act and Freedom of Information Act, by any party who submits a written request for a copy of such documents within 20 days of the date of publication of this notice to the address above; telephone: (503) 231–2063. Please refer to the respective permit number for each application when requesting copies of documents.

Dated: June 28, 1999.

Thomas Dwyer,

Acting Regional Director, Region 1, Portland, Oregon.

[FR Doc. 99–16851 Filed 7–1–99; 8:45 am]

BILLING CODE 4310–55–P

DEPARTMENT OF THE INTERIOR

Fish and Wildlife Service

Availability of Draft Recovery Plan for the Giant Garter Snake for Review and Comment

AGENCY: Fish and Wildlife Service, Interior.

ACTION: Notice of document availability.

SUMMARY: The U.S. Fish and Wildlife Service announces the availability for public review of the Draft Recovery Plan for the Giant Garter Snake. This recovery plan includes the threatened giant garter snake (*Thamnophis gigas*). Additional species of concern that will benefit from recovery actions taken for the giant garter snake are also discussed in the draft recovery plan. The draft plan includes recovery criteria and measures for the giant garter snake.

DATES: Comments on the draft recovery plan must be received on or before August 31, 1999.

ADDRESSES: Copies of the draft recovery plan are available for inspection, by appointment, during normal business hours at the following location: U.S. Fish and Wildlife Service, Sacramento Fish and Wildlife Office, 3310 El Camino Avenue, Suite 130, Sacramento, California (telephone (916) 979–2710). Requests for copies of the draft recovery plan and written comments and materials regarding this plan should be addressed to the Field Supervisor, Ecological Services, at the above Sacramento address.

FOR FURTHER INFORMATION CONTACT: Karen Miller, Fish and Wildlife Biologist, at the above Sacramento address.

SUPPLEMENTARY INFORMATION:

Background

Restoring endangered or threatened animals and plants to the point where they are again secure, self-sustaining members of their ecosystems is a primary goal of the Service's endangered species program. To help guide the recovery effort, the Service is working to prepare recovery plans for most of the listed species native to the United States. Recovery plans describe actions considered necessary for the conservation of the species, establish criteria for downlisting or delisting listed species, and estimate time and cost for implementing the recovery measures needed.

The Endangered Species Act of 1973, as amended (16 U.S.C. 1531 *et seq.*) (Act), requires the development of recovery plans for listed species unless such a plan would not promote the conservation of a particular species. Section 4(f) of the Act as amended in 1988 requires that public notice and an opportunity for public review and comment be provided during recovery plan development. The Service will consider all information presented during the public comment period prior to approval of each new or revised recovery plan. Substantive technical comments will result in changes to the plan. Substantive comments regarding recovery plan implementation may not necessarily result in changes to the recovery plan, but will be forwarded to appropriate Federal or other entities so that they can take these comments into account during the course of implementing recovery actions. Individualized responses to comments will not be provided.

The giant garter snake is an endemic species of wetlands in the Central Valley of California. Historically, giant garter snakes were found in the Sacramento and San Joaquin Valleys from the vicinity of Butte County southward to Buena Vista Lake, near Bakersfield in Kern County. Today, populations of the giant garter snake are found in the Sacramento Valley and isolated portions of the San Joaquin Valley. They historically inhabited natural wetlands and now occupy a variety of agricultural, managed, and natural wetlands including their waterways and adjacent uplands. This species is threatened by historic wetland habitat loss and resulting habitat fragmentation, and by continuing urban expansion.

The objective of this recovery plan is to delist the giant garter snake through implementation of a variety of recovery measures including (1) habitat protection; (2) public participation,

outreach and education; (3) habitat management and restoration; (4) surveying and monitoring; and (5) research.

Public Comments Solicited

The Service solicits written comments on the recovery plan described. All comments received by the date specified above will be considered prior to approval of this plan.

Authority

The authority for this action is section 4(f) of the Endangered Species Act, 16 U.S.C. 1533(f).

Dated: June 28, 1999.

Elizabeth H. Stevens,

California/Nevada Operations Manager, Sacramento, California.

[FR Doc. 99–16850 Filed 7–1–99; 8:45 am]

BILLING CODE 4310–55–P

DEPARTMENT OF THE INTERIOR

Bureau of Land Management

[AZ–050–99–5440–A167–00; AZA 30933]

Arizona: Notice of Realty Action, Recreation and Public Purpose Act; Leases/Conveyances; La Paz County, Arizona

AGENCY: Bureau of Land Management, Interior.

ACTION: Notice.

SUMMARY: The La Paz County, Arizona, Department of Community Development has filed an application pursuant to the Recreation and Public Purposes Act of June 14, 1926, as amended (43 U.S.C. 869, *et seq.*) for the lease/conveyance of public land for a justice court system facility at the following location:

Gila and Salt River Meridian, Arizona

T. 4 N., R. 19 W.,
Sec. 22, SW¼SW¼NE¼.
The area described contains 10 acres.

The land described above is a part of public lands that are classified as suitable for lease/conveyance under the R&PP Act.

SUPPLEMENTARY INFORMATION: The County proposes to locate a new Justice Court facility to serve Justice of the Peace District #4. The new facility is needed to meet security concerns not adequately addressed in the layout of the present facility. In addition, the present facility makes compliance with the Americans with Disabilities Act problematic. The new facility will be designed to address this problem. Leases and conveyances, when issued, will contain the following terms, conditions and reservations to the United States:

1. The provisions of the R&PP Act and all applicable regulations of the Secretary of the Interior.
2. Rights-of-way for ditches and canals constructed by the authority of the United States.
3. All minerals shall be reserved to the United States, together with the right to prospect for, mine, and remove such deposits from the same under applicable law and such regulations to be established by the Secretary of the Interior.
4. Those rights for a water production facility granted to the Town of Quartzsite (AZA 27765) under the Act of October 26, 1976 (43 U.S.C. 1761).
5. Those rights for a public road granted to the Town of Quartzsite AZA 27066) under the Act of October 26, 1976 (43 U.S.C. 1761).
6. Those rights for a public road granted to the Town of Quartzsite (AZA 27776) under the Act of October 26, 1976 (43 U.S.C. 1761).

APPLICATION COMMENTS: For a period of 45 days from the date of publication of this notice in the **Federal Register**, interested parties may submit comments regarding the proposed lease/conveyance of the lands to the Field Manager, Yuma Field Office, 2555 East Gila Ridge Road, Yuma, Arizona 85365. Comments should address the specific uses proposed in the application and plan of development, whether the Bureau of Land Management followed proper administrative procedures in reaching the decision, or nay other factor not directly related to the suitability of the land for justice court facilities.

FOR FURTHER INFORMATION CONTACT: Stephen Fusilier, Realty Specialist, at (520) 317–3296.

Dated: June 22, 1999.

Gail Acheson,

Field Manager.

[FR Doc. 99–16628 Filed 7–1–99; 8:45 am]

BILLING CODE 4310–32–M

DEPARTMENT OF THE INTERIOR

Bureau of Land Management

[NV–930–1430–01; N–63025]

Realty Action: Modified-Competitive Sale of Public Lands

AGENCY: Bureau of Land Management.

ACTION: Modified-Competitive Sale of Public Lands in White Pine County, Nevada.

SUMMARY: The below listed public land in Snake Valley, near Baker, White Pine County, Nevada has been examined and found suitable for sale utilizing modified-competitive procedures, at not less than the fair market value. In accordance with Section 7 of the Act of June 28, 1934, as amended, 43 U.S.C. 315f and EO 6910, the described lands are hereby classified as suitable for disposal under the authority of Section 203 and Section 209 of the Act of October 21, 1976; 43 U.S.C. 1761.

DATES: On or before August 16, 1999, interested parties may submit comments to the Assistant Field Manager, Nonrenewable Resources.

ADDRESSES: Written comments should be addressed to: Bureau of Land Management, Gene L. Drais, Assistant Field Manager, Nonrenewable Resources, HC 33, Box 33500, Ely, NV 89301–9408.

FOR FURTHER INFORMATION CONTACT: Brenda Linnell, Realty Specialist, at the above address or telephone (775) 289–1808.

SUPPLEMENTARY INFORMATION: The following described parcel of land, situated in White Pine County is being offered as a modified-competitive sale of public lands located;

Mount Diablo Meridian, Nevada

T. 14 N., R. 71 E.,
Section 30, Lots 9, 10, 12; SW¼NE¼SW¼
Containing 27.29 acres more or less.

This land is not required for any federal purposes. The sale is consistent with current Bureau planning for this area and would be in the public interest.

In the event of a sale, conveyance of the available mineral interests will occur simultaneously with the sale of the land. The mineral interests being offered for conveyance have no known mineral value. Acceptance of a sale offer will constitute an application for conveyance of those mineral interests. The applicant will be required to pay a $50.00 nonreturnable filling fee for the conveyance of the available mineral interests. Unless otherwise provided by separate agreement with surface owner, permittee, licensees and lessees of the United States shall reclaim disturbed areas to the extent prescribed by regulations issued by the Secretary of the Interior. All cause of action brought to enforce the rights of the surface owner under the regulations above referred to shall be instituted against permittee, licensees and lessees of the United States; and the United States shall not be liable for the acts or omissions of its permittee, licensees and lessees.

The land will be offered for sale by sealed bid to be submitted at the BLM

Ely Field Office at 702 North Industrial Way, Ely Nevada, 89301, during standard working hours starting at 7:30 am PDST on August 31, 1999 and ending 4:00 pm PDST on September 7, 1999. The sealed bids will be opened at 8:00 am PDST on September 8, 1999. This sale will be by modified-competitive procedures. Ms. Denys Koyle (designated bidder) will be given the opportunity to meet the highest bid received by sealed bid. Bid envelopes must be marked on the left front corner with serial number N–63025 and sale date. Bid must not be less than the appraised fair market value as specified in this notice. The Fair Market Value as determined by appraisal is $47,000.00. Each sealed bid shall be accompanied by a certified check, postal money order, or cashier's check made payable to the *Department of Interior:* BLM, for not less than 10 percent of the amount bid.

The terms and conditions applicable to this sale are:

The patent, when issued, will contain the following reservation to the United States:

1. A right-of-way thereon for ditches and canals constructed by the authority of the United States, Act of August 30, 1890 (43 U.S.C. 945).

2. All the oil and gas mineral deposits in the land subject to this conveyance, including without limitation, the disposition of these substances under the mineral leasing laws. Its permittees, licensees and lessees, the right to prospect for, mine and remove the mineral owned by the United States under applicable law and such regulations as the Secretary of the Interior may prescribe. This reservation includes all necessary and incidental activities conducted in accordance with the provisions of the mineral leasing laws in effect at the time such activities are undertaken, including, without limitation, necessary access and exit rights, all drilling, underground, or surface mining operation, storage and transportation facilities deemed necessary and authorized under law and implementing regulations.

The patent will be subject to the following:

1. Those rights for underground telephone cable and appurtenances granted to Nevada Bell, its successors or assignees, by right-of-way No. N–4877, pursuant to the Act of March 4, 1911; (Stat. 1253) 43 U.S.C. 961. Right-of-way N–4877 expires November 4, 2020.

2. Those rights for U.S. Highway 50, granted to Nevada Department of Transportation, its successors or assignees, by right-of-way No. CC–023480, under Section 17 of the Act of November 9, 1921 (42 Stat. 212–216); 23 U.S.C., Sec. 18.

3. Those rights for an existing county road right-of-way for a dirt road, constructed under the provisions of R.S. 2477. The right-of-way width is 60 feet. This right-of-way is granted in perpetuity.

4. A 60 foot wide road right-of-way from Highway 50, north along the west side of Lot 10, allowing access to Lots 4 and 5, granted to White Pine County.

5. A 60 foot wide road right-of-way from Highway 50, north along the west side of Lot 9, allowing access to Lot 5, 6, and 7, granted to White Pine County.

Federal law requires all bidders must be U.S. citizens 18 years old or older, or in the case of corporations, be subject to the laws of any State of the United States.

Under modified-competitive sale procedures, an apparent high bidder will be declared after the sealed bids are open. The apparent high bidder and the designated bidder (Ms. Denys Koyle) will be notified. The designated bidder will have 30 days from the date of the sale to exercise the preference consideration given to meet the high bid. Should the designated bidder fail to submit a bid that matches the apparent high bid within specified time period, the apparent high bidder shall be declared high bidder. The total purchase price of the land shall be paid within 180 days of the date of the sale. The purchase price does not include the costs for publishing in the **Federal Register**. The purchaser will be required to reimburse the BLM for publishing cost, when remitting final payment for parcel.

Upon publication of this notice in the **Federal Register**, the above described land will be segregated from all other forms of appropriation under the public land laws, including the general mining laws, and leasing under the mineral leasing laws. This segregation will terminate upon issuance of a patent or 270 days from the date of this publication, whichever occurs first.

For a period of 45 days from the date of publication of this notice in the **Federal Register**, interested parties may submit comments regarding this action to the Assistant Field Manager, Nonrenewable Resources at the address listed above. Any adverse comments will be reviewed by the State Director who may sustain, vacate, or modify this realty action. In absence of any adverse comments, this realty action will become the final determination of the Department of the Interior. The Bureau of Land Management may accept or reject any or all offers, or withdraw any land or interest in the land from sale, if, in the opinion of the authorized officer, consummation of the sale would not be fully consistent with FLPMA, or other applicable laws. The lands will not be offered for sale until at least 60 days after the date of publication of this notice in the **Federal Register**.

Dated: June 21, 1999.

Gene A. Kolkman,

Field Manager.

[FR Doc. 99–16843 Filed 7–1–99; 8:45 am]

BILLING CODE 4310–HC–P

DEPARTMENT OF THE INTERIOR

National Park Service

Notice of Inventory Completion for Native American Human Remains and Associated Funerary Objects in the Possession of the Oregon State Museum of Anthropology, University of Oregon, Eugene, OR

AGENCY: National Park Service

ACTION: Notice

Notice is hereby given in accordance with provisions of the Native American Graves Protection and Repatriation Act (NAGPRA), 43 CFR 10.9, of the completion of an inventory of human remains and associated funerary objects in the possession of the Oregon State Museum of Anthropology, University of Oregon, Eugene, OR.

A detailed assessment of the human remains was made by Oregon State Museum of Anthropology (OSMA) professional staff in consultation with representatives of the Shoalwater Bay Tribe of the Shoalwater Bay Indian Reservation, the Confederated Tribes of Grand Ronde, the Confederated Tribes of Siletz Indians, Confederated Tribes of Coos, Lower Umpqua, and Siuslaw Indians of Oregon, the Coquille Tribe of Oregon, the Klamath Indian Tribe of Oregon, and the Quartz Valley Indian Community of the Quartz Valley Reservation.

In 1935, human remains representing two individuals were recovered from Ecola Park near Indian Beach, Clatsop County, OR by a trail building crew and donated to OSMA by a donor whose name is withheld by OSMA. No known individuals were identified. No associated funerary objects are present.

Based on archeological context and skeletal morphology, these individuals have been determined to be Native American. Historic documents, ethnographic sources, and oral history indicate that Nehalem and Clatsop peoples have occupied the northern Oregon coast area since precontact times.

On an unknown date, human remains representing one individual from Astoria, OR were donated to OSMA by a donor whose name is withheld by OSMA. No known individual was identified. The four associated funerary objects include a bone bipoint, lithic debitage, and worked and unworked animal bones and teeth.

In 1950, human remains representing one individual from Astoria, OR were donated to OSMA by a donor whose name is withheld by OSMA. No known individual was identified. No associated funerary objects are present.

Based on probable archeological context and skeletal morphology, these individuals have been determined to be Native American. Historic documents, ethnographic sources, and oral history indicate that Lower Chinookan peoples have occupied the Astoria, OR area since precontact times.

In 1974, human remains representing two individuals were recovered from the Dunes site (35CLT27), Clatsop County, OR during legally authorized excavations conducted by Clatsop Community College archeology field school. In 1995, Clatsop Community College transferred these human remains to OSMA. No known individuals were identified. No associated funerary objects are present.

Based on archeological context and skeletal morphology, these individuals have been determined to be Native American. Historic documents, ethnographic sources, and oral history indicate that the Lower Chinookan peoples have occupied the northernmost Oregon coast area since precontact times.

Based on the above mentioned information, officials of the Oregon State Museum of Anthropology have determined that, pursuant to 43 CFR 10.2 (d)(1), the human remains listed above represent the physical remains of six individuals of Native American ancestry. Officials of the Oregon State Museum of Anthropology have also determined that, pursuant to 43 CFR 10.2 (d)(2), the four objects listed above are reasonably believed to have been placed with or near individual human remains at the time of death or later as part of the death rite or ceremony. Lastly, officials of the Oregon State Museum of Anthropology have determined that, pursuant to 43 CFR 10.2 (e), there is a relationship of shared group identity which can be reasonably traced between these Native American human remains and the Confederated Tribes of Grand Ronde, Confederated Tribes of Siletz Indians, and the Shoalwater Bay Tribe of the Shoalwater Bay Indian Reservation.

In 1960, human remains representing one individual were recovered from the Iron Gate 2 site, nine miles east of Hornbrook, Siskiyou County, CA during legally authorized excavations conducted by University of Oregon archeologists. No known individual was identified. No associated funerary objects are present.

In 1961, human remains representing one individual recovered during construction of the Iron Gate Dam, CA were curated at OSMA by the Sheriff's Office, Siskiyou County, CA. No known individual was identified. No associated funerary objects are present.

Historical documents, ethnographic sources, and oral history indicate that Shasta peoples have occupied the Siskiyou County, CA area since precontact times. Based on the archeological evidence and/or skeletal material, the individuals from Iron Gate Dam site and the Iron Gate 2 site are Native American.

Based on the above mentioned information, officials of the Oregon State Museum of Anthropology have determined that, pursuant to 43 CFR 10.2 (d)(1), the human remains listed above represent the physical remains of two individuals of Native American ancestry. Officials of the Oregon State Museum of Anthropology have determined that, pursuant to 43 CFR 10.2 (e), there is a relationship of shared group identity which can be reasonably traced between these Native American human remains and the Confederated Tribes of Grand Ronde, Confederated Tribes of Siletz Indians, and the Quartz Valley Indian Community of the Quartz Valley Reservation.

In 1963, human remains representing three individuals from the Border Village site (35KL16) were recovered during legally authorized excavations conducted by University of Oregon archeologists. No known individuals were identified. The five associated funerary objects include a steatite pipe and fragments of an antler spoon.

Historical documents, ethnographic sources, and oral history indicate that Klamath-Modoc and Shasta-Takelma peoples have occupied the upper Klamath river area since precontact times. Based on archeological context, the individuals have been identified as Native American of probable Klamath-Modoc or Shasta Takelma cultural affiliation.

Based on the above mentioned information, officials of the Oregon State Museum of Anthropology have determined that, pursuant to 43 CFR 10.2 (d)(1), the human remains listed above represent the physical remains of three individuals of Native American ancestry. Officials of the Oregon State Museum of Anthropology have also determined that, pursuant to 43 CFR 10.2 (d)(2), the five objects listed above are reasonably believed to have been placed with or near individual human remains at the time of death or later as part of the death rite or ceremony. Lastly, officials of the Oregon State Museum of Anthropology have determined that, pursuant to 43 CFR 10.2 (e), there is a relationship of shared group identity which can be reasonably traced between these Native American human remains and associated funerary objects and the Confederated Tribes of Grand Ronde, Confederated Tribes of Siletz Indians, the Klamath Tribe of Oregon, and the Quartz Valley Indian Community of the Quartz Valley Reservation.

At an unknown date, human remains representing one individual were placed in storage at the Museum by an unknown donor. No known individual was identified. No associated funerary objects are present.

Museum records show these remains were given a general provenience of ''Oregon Coast''. No other information exists regarding this individual.

Possibly during the 1940s, human remains representing six individuals were transferred to the Museum from the University of Oregon Medical School Crime Detection Laboratory. No known individuals were identified. No associated funerary objects are present.

Based on skeletal morphology, these individuals have been identified as Native American. Museum catalogs attribute these human remains to the Oregon coast.

In 1966, human remains representing one individual were catalogued in Museum collections. No known individual was identified. No associated funerary objects are present.

Based on skeletal morphology, this individual has been identified as Native American. Museum catalogs list a general provenience of the Oregon coast.

Based on the above mentioned information, officials of the Oregon State Museum of Anthropology have determined that, pursuant to 43 CFR 10.2 (d)(1), the human remains listed above represent the physical remains of eight individuals of Native American ancestry. Officials of the Oregon State Museum of Anthropology have determined that, pursuant to 43 CFR 10.2 (e), there is a relationship of shared group identity which can be reasonably traced between these Native American human remains and the Shoalwater Bay Tribe of the Shoalwater Bay Indian Reservation, the Confederated Tribes of Grand Ronde, the Confederated Tribes

of Siletz Indians, Confederated Tribes of Coos, Lower Umpqua, and Siuslaw Indians of Oregon, and the Coquille Tribe of Oregon.

At an unknown date, human remains representing one individual were donated to the Museum by a donor whose name is withheld by OSMA. No known individual was identified. No associated funerary objects are present.

Accession records state the donor found these human remains near the Santiam River, OR.

In 1962, human remains representing one individual from the Linn 10 site, in the central Willamette Valley, Linn County, OR were recovered during legally authorized excavations conducted by University of Oregon archeologists. No known individual was identified. The approximately 56 associated funerary objects include copper, bone, and shell beads, flaked stone tools, groundstone tools, worked antler tools, and unworked shell and bone.

Historical documents, ethnographic sources, and oral history indicate that Kalapuya and Molalla peoples have occupied the central Willamette Valley since precontact times. Based on archeological context and/or skeletal morphology, these individuals have been identified as Native American of possible Kalapuya or Molalla cultural affiliation.

In 1932, human remains representing 40 individuals from site 35JA130 in Gold Hill, OR during legally authorized excavations conducted by University of Oregon archeologists. No known individuals were identified. The approximately 387 associated funerary objects include chipped and ground stone tools, large obsidian knives, arrow points, pine nut beads, and *glycymeris*, olive, and abalone shell beads and pendants.

In 1940, human remains representing one individual were donated to the Museum by a donor whose name is withheld by OSMA. No known individual was identified. No associated funerary objects are present. Accession notes give a general provenience of Caveman Bridge, Rogue River, OR; there is no other information with the remains.

Historical documents, ethnographic sources, and oral history indicate that the Takelma people have occupied the upper Rogue River Valley since precontact times. Based on archeological context and/or skeletal morphology, the individuals from site 35JA130 and Caveman Bridge have been identified as Native American of possible Takelma cultural affiliation.

In 1961, human remains representing one individual from the site of the North Eugene High School, Eugene, OR were recovered during legally authorized excavations conducted by University of Oregon archeologists. No known individual was identified. No associated funerary objects are present.

In 1966, human remains representing one individual from the Slate's Forest Mound site (35LIN20), Linn County, OR were recovered during legally authorized excavations conducted by University of Oregon archeologists. No known individual was identified. The approximately eight associated funerary objects include worked and unworked stone flakes, a stone chopper, and unmodified bone, shell, and rock.

In 1971, human remains representing approximately seven individuals from the Lynch site (35LIN36), Linn County, OR were recovered during legally authorized excavations conducted by University of Oregon archeologists. No known individuals were identified. The four associated funerary objects are projectile points.

In 1969, human remains representing approximately eight individuals from private land at Six Corners near the Tualatin River, OR were removed and donated to the Museum by a donor whose name is withheld by OSMA. No known individuals were identified. The approximately 32 associated funerary objects include copper, brass, and iron jewelry; shell and glass beads; copper buttons; woven hair; animal bones; sinew and cordage.

In 1966, human remains representing six individuals from the Lingo site (35LA29), Lane County, OR were recovered during legally authorized excavations conducted by the University of Oregon Field School. No known individuals were identified. The three associated funerary objects include a stone pestle, a beaver mandible, and a shell pendant.

In 1970, human remains representing three individuals from sites 35LIN45 and 35LIN50 in Linn County, OR were recovered during legally authorized excavations conducted by University of Oregon archeologists. No known individuals were identified. The 16 associated funerary objects include a bone bead, worked and unworked animal bones, and stone projectile points.

Historical documents, ethnographic sources, and oral history indicate that the Kalapuya people have occupied the southern Willamette Valley area since precontact times. Based on archeological context and/or skeletal morphology, the individuals from the North Eugene High School site, the Slate's Forest Mound site, the Lynch site, the Six Corners site, the Lingo site, and sites 35LIN45 and 35LIN50 have been identified as Native American of possible Kalapuya cultural affiliation.

In 1935, human remains representing two individuals, probably from Scott Lake near McKenzie Pass, OR were donated to the Museum by a donor whose name is withheld by OSMA. No known individuals were identified. No associated funerary objects are present.

In 1940, human remains representing one individual from a site near Crater Lake, OR were recovered during legally authorized excavations conducted by University of Oregon archeologists, including former Museum Director L.S. Cressman. No known individual was identified. No associated funerary objects are present.

In 1947, human remains representing one individual were donated to the Museum by a donor whose name is withheld by OSMA. No known individual was identified. No associated funerary objects are present. Accession records indicate these human remains were collected from a road cut located three miles towards Medford from Prospect, OR.

Historical documents, ethnographic sources, and oral history indicate that the Molalla people have occupied the Cascade Range and upper Rogue River valley since precontact times. Based on archeological context and/or skeletal morphology, the individuals from Scott Lake, Crater Lake, and from near Prospect, OR have been identified as Native American of possible Molalla cultural affiliation.

In 1947, human remains representing 41 individuals from Fuller Mound, Yamhill County, OR were donated to the Museum by a donor who collected these individuals and whose name is withheld by OSMA. No known individuals were identified. The approximately 35 associated funerary objects include worked whalebone and other animal bone tools; shell and glass beads; metal; a stone net sinker; unworked wood, bone, and shell; and an obsidian blade.

In 1947, human remains representing 19 individuals from the Fanning Mound, Yamhill County, OR were donated to the Museum by a donor who collected these individuals from the site and whose name is withheld by OSMA. No known individuals were identified. The five associated funerary objects include a stone pestle and worked bone.

In 1959, human remains representing five individuals were donated to the Museum by a donor whose name is withheld by OSMA. No known individuals were identified. No

associated funerary objects are present. Museum records show that the donor removed these remains from his father's nursery approximately five miles southwest of McMinnville, OR, east of Highway 18 on the west bank of the Yamhill River in Yamhill County.

In 1950, human remains representing two individuals were donated to the Museum by a donor whose name is withheld by OSMA. No known individuals were identified. No associated funerary objects are present. Accession records indicate these remains were removed from a ''burial mound'' in a field no far from the south bank of Muddy Creek, two miles east of Highway 99E between Halsey and Harrisburg, and a short distance northwest of the Rowland schoolhouse in Yamhill County, OR.

Historical documents, ethnographic sources, and oral history indicate that the Yamhill and Kalapuya peoples have occupied the Yamhill County area since precontact times. Based on archeological context and/or skeletal morphology, these individuals from Yamhill County have been identified as Native American of possible Yamhill or Kalapuya cultural affiliation.

In 1947, human remains representing one individual from Netarts Spit, OR were donated to the Museum from a donor who collected the remains and whose name is withheld by OSMA. No known individual was identified. The one associated funerary object is an obsidian point.

In 1956, human remains representing one individual from the Netarts Spit site (35TI1), Tillamook County, OR were recovered during legally authorized excavations conducted by University of Oregon archeologists. No known individual was identified. No associated funerary objects are present.

In 1991, human remains representing one individual from the Kilchis Point Village site, Tillamook County, OR were transferred from Portland State University to the Museum. No known individual was identified. No associated funerary objects are present.

Historical documents, ethnographic sources, and oral history indicate that the Tillamook people have occupied the north-central Oregon coast area since precontact times. Based on archeological context and/or skeletal morphology, these individuals from Tillamook County have been identified as Native American of possible Tillamook cultural affiliation.

Based on the above mentioned information, officials of the Oregon State Museum of Anthropology have determined that, pursuant to 43 CFR 10.2 (d)(1), the human remains listed above represent the physical remains of minimum of 143 individuals of Native American ancestry. Officials of the Oregon State Museum of Anthropology have also determined that, pursuant to 43 CFR 10.2 (d)(2), the approximately 547 objects listed above are reasonably believed to have been placed with or near individual human remains at the time of death or later as part of the death rite or ceremony. Lastly, officials of the Oregon State Museum of Anthropology have determined that, pursuant to 43 CFR 10.2 (e), there is a relationship of shared group identity which can be reasonably traced between these Native American human remains and associated funerary objects and the Confederated Tribes of Grand Ronde and the Confederated Tribes of the Siletz Indians.

This notice has been sent to officials of the Shoalwater Bay Tribe of the Shoalwater Bay Indian Reservation, the Confederated Tribes of Grand Ronde, the Confederated Tribes of Siletz Indians, Confederated Tribes of Coos, Lower Umpqua, and Siuslaw Indians of Oregon, the Coquille Tribe of Oregon, the Klamath Indian Tribe of Oregon, and the Quartz Valley Indian Community of the Quartz Valley Reservation. Representatives of any other Indian tribe that believes itself to be culturally affiliated with these human remains and associated funerary objects should contact C. Melvin Aikens, Oregon State Museum of Anthropology, 1224 University of Oregon, Eugene, OR 97403-1224; telephone: (541) 346-5115, before [*thirty days after publication in the* **Federal Register**]. Repatriation of the human remains and associated funerary objects to the Confederated Tribes of Grand Ronde may begin after that date if no additional claimants come forward.

The National Park Service is not responsible for the content of or determinations within this notice.

Dated: June 21, 1999.

Francis P. McManamon,

Departmental Consulting Archeologist, Manager, Archeology and Ethnography Program.

[FR Doc. 99–16849 Filed 7–1–99; 8:45 am]

BILLING CODE 4310–70–F

INTERNATIONAL TRADE COMMISSION

[Inv. No. 337–TA–409]

In the Matter of Certain CD-ROM Controllers and Products Containing the Same—II; Notice of Commission Decisions to Review Portions of One Initial Determination and All of a Second Initial Determination, and Schedule for the Filing of Written Submissions on the Issues Under Review and on Remedy, the Public Interest, and Bonding

AGENCY: U.S. International Trade Commission.

ACTION: Notice.

SUMMARY: Notice is hereby given that the U.S. International Trade Commission has determined to review-in-part the final initial determination (ID) issued on May 12, 1999, by the presiding administrative law judge (ALJ) in the above-captioned investigation finding that there was no violation of section 337 of the Tariff Act of 1930, 19 U.S.C. 1337, and to review in its entirety an ID (ALJ Order No. 15) issued on May 10, 1999, granting respondent United Microelectronics Corporation's (UMC's) motion for a summary determination terminating UMC from the investigation.

FOR FURTHER INFORMATION CONTACT: Timothy P. Monaghan, Esq., Office of the General Counsel, U.S. International Trade Commission, 500 E Street, SW, Washington, DC 20436, telephone 202–205–3152. General information concerning the Commission may also be obtained by accessing its Internet server (http://www.usitc.gov). Hearing-impaired persons are advised that information on this matter can be obtained by contacting the Commission's TDD terminal on 202–205–1810.

SUPPLEMENTARY INFORMATION: The Commission instituted this investigation on May 13, 1998, based on a complaint filed by Oak Technology, Inc. 63 FR 26625 (1998). The complainant named four respondents: MediaTek, UMC, Lite-On Technology Corp., and AOpen Inc. Actima Technology Corporation, ASUSTek Computer, Incorporated, Behavior Tech Computer Corporation, Data Electronics, Inc., Momitsu Multi Media Technologies, Inc., Pan-International Industrial Corporation, and Ultima Electronics Corporation were permitted to intervene.

In its complaint, Oak alleged that respondents violated section 337 by importing into the United States, selling for importation, and/or selling in the United States after importation

electronic products and/or components that infringe claims 1–5 and 8–10 of U.S. Letters Patent 5,581,715 ('715 patent). The presiding ALJ held an evidentiary hearing from January 11, 1999, to January 28, 1999.

On May 10, 1999, the ALJ issued an ID (Order No. 15) granting the motion of respondent UMC for a summary determination terminating respondent UMC from the investigation on the basis of a license agreement. On May 12, 1999, the ALJ issued his final ID finding that there was no violation of section 337. He found that there was no infringement of any claims at issue. He further found that the claims in issue of the '715 patent were invalid for on-sale bar under 35 U.S.C. 102(b), anticipation under 35 U.S.C. 102(a), obviousness under 35 U.S.C. 103, for indefiniteness under 35 U.S.C. 112(2), (6), and for derivation under 35 U.S.C. 102(f). The ALJ found that there was a domestic industry with respect to the '715 patent.

Complainant Oak filed a petition for review of Order No. 15 and respondent UMC and the Commission investigative attorney (IA) filed responses to Oak's petition for review of Order No. 15. Oak, respondents, and the IA filed a petitions for review of the final ID, and all parties subsequently responded to each other's petitions for review of the final ID.

Having examined the record in this investigation, including Order No. 15, the final ID, the petitions for review, and the responses thereto, the Commission has determined not to review the ID's findings with respect to the preamble and the Digital Signal Processor (DSP) element. The Commission has determined to review the remainder of the final ID and Order No. 15 in its entirety.

While the Commission expects the parties to brief all of the issues being reviewed, the Commission is particularly interested in receiving answers to the following questions:

(1) With respect to the claimed memory means, please cite and discuss any Federal Circuit cases dealing with indefiniteness of an issued patent, which carries a presumption of validity, in the context of apparent confusion between the language of the claim and the content of the specification.

(2) Should the claimed error detection and correction means be interpreted as a means-plus-function element that necessarily includes two specific circuits, but which may include more circuit structure?

(3) If the claimed error detection and correction means is construed as a means-plus-function element—

(a) Is it possible under current Federal Circuit case law to satisfy the requirements for structural description under 35 U.S.C. 112 ¶ 6 by references to ''circuits * * * commonly available as hardware used in many other applications?''

(b) Is there any evidence of record of commonly available hardware, at the time of the alleged infringement, for performing the error detection function by a cyclic redundancy check other than by a linear feedback shift register?

(c) Is common availability in hardware a prerequisite for determining whether the error detection circuitry in any accused device is an equivalent to a linear feedback shift register for purposes of section 112 ¶ 6 at the time of the alleged infringement?

(d) Does the MediaTek Error Detection Processor perform the identical function as the disclosed cyclic redundancy checker?

(e) At the time of the alleged infringement, would the MediaTek Error Detection Processor be considered an equivalent device under section 112 ¶ 6 for performing the claimed function?

(4) If the claimed error detection and correction means is not construed as a means-plus-function element, please discuss, to the extent the record will allow, whether the MediaTek Error Detection Processor, considering its operation from both a hardware and software standpoint, may be considered a cyclic redundancy checker?

(5) Under Federal Circuit case law, what is necessary to conclude that a feature of disclosed circuitry is directly linked to a claimed function in order to make it part of the ''corresponding structure'' under section 112 ¶ 6? In particular, could a patentee demonstrate this required linkage by showing, as a matter of logic, that the circuitry of the claimed means could not work without the feature in question, even though there is no explicit textual reference to the claimed function in the portion(s) of the specification dealing with that feature?

(6) Please discuss which features of the claimed host interface means should be included in the ''corresponding structure'' for purposes of construing this element.

(7) Please discuss, including all the engineering detail the record will allow, including timing relationships, signal characteristics, sequence of operations, and any other design parameters you deem relevant, how the claimed host interface means functions.

(8) With respect to the claimed host interface means—

(a) Does the preamble to claim 1 require that the host interface means directly connect to the IDE/ATA bus and have sufficient circuitry to support any IDE-based command set?

(b) Aside from expanding to eight registers and changing the addressing scheme, what design problems had to be solved to go from the Mitsumi daughterboard to the claimed invention? Where are the solutions to those problems reflected in the patent specification?

(c) What design problems of the host interface means, if any, would remain unsolved in view of the ATA or ATAPI specifications? To the extent you contend that design features of the host interface means are disclosed by the engineering information in these specifications, please cite specific references, at least to sections and preferably to page numbers, where the information may be found.

(9) With respect to the ALJ's obviousness analysis, what is the teaching, motivation, or suggestion to combine the references employed?

(a) If you contend that the teaching, motivation, or suggestion derives, in whole or in part, from ''the nature of the problem,'' please discuss the extent to which Federal Circuit case law has extended this concept beyond simple mechanical contexts.

(b) If you contend that it derives, in whole or in part, from the teachings of pertinent references, please cite to the passages in the references in question that you contend furnish such a suggestion.

(c) If you contend that it derives, in whole or in part, from the knowledge of those of ordinary skill in the art of the importance of certain references, please be specific as to how all or portions of the references in any given combination were well known in the art prior to the invention and how a person of ordinary skill in the art would have known to combine material from other references in the combination that are not so well known.

(10) 35 U.S.C. 103 directs that the reference point for an obviousness analysis is ''at the time the invention was made.'' In view of the evidence of a conception date no later than April 1993, what is the relevance under governing case law of the ATAPI standard, which was apparently available to no one before June 10, 1993?

In connection with the final disposition of this investigation, the Commission may issue (1) an order that could result in the exclusion of the subject articles from entry into the United States, and/or (2) cease and desist orders that could result in respondents being required to cease and desist from engaging in unfair acts in

the importation and sale of such articles. Accordingly, the Commission is interested in receiving written submissions that address the form of remedy, if any, that should be ordered. If a party seeks exclusion of an article from entry into the United States for purposes other than entry for consumption, the party should so indicate and provide information establishing that activities involving other types of entry either are adversely affecting it or likely to do so. For background, see In the Matter of Certain Devices for Connecting Computers via Telephone Lines, Inv. No. 337–TA–360, USITC Pub. No. 2843 (December 1994) (Commission Opinion).

If the Commission contemplates some form of remedy, it must consider the effects of that remedy upon the public interest. The factors the Commission will consider include the effect that an exclusion order and/or cease and desist orders would have on (1) the public health and welfare, (2) competitive conditions in the U.S. economy, (3) U.S. production of articles that are like or directly competitive with those that are subject to investigation, and (4) U.S. consumers. The Commission is therefore interested in receiving written submissions that address the aforementioned public interest factors in the context of this investigation.

If the Commission orders some form of remedy, the President has 60 days to approve or disapprove the Commission's action. During this period, the subject articles would be entitled to enter the United States under a bond, in an amount determined by the Commission and prescribed by the Secretary of the Treasury. The Commission is therefore interested in receiving submissions concerning the amount of the bond that should be imposed.

Written Submissions

The parties to the investigation, interested government agencies, and any other interested parties are encouraged to file written submissions on the issues under review, and on remedy, the public interest, and bonding. Such submissions should address the May 26, 1999, recommended determination by the ALJ on remedy and bonding. Complainant and the Commission investigative attorney are also requested to submit proposed remedial orders for the Commission's consideration. The written submissions and proposed remedial orders must be filed no later than close of business on July 12, 1999. Reply submissions must be filed no later than the close of business on July 19, 1999. No further submissions on these issues will be permitted unless otherwise ordered by the Commission.

Persons filing written submissions must file with the Office of the Secretary the original document and 14 true copies thereof on or before the deadlines stated above. Any person desiring to submit a document (or portion thereof) to the Commission in confidence must request confidential treatment unless the information has already been granted such treatment during the proceedings. All such requests should be directed to the Secretary of the Commission and must include a full statement of the reasons why the Commission should grant such treatment. See section 201.6 of the Commission's Rules of Practice and Procedure, 19 CFR 201.6. Documents for which confidential treatment by the Commission is sought will be treated accordingly. All nonconfidential written submissions will be available for public inspection at the Office of the Secretary.

This action is taken under the authority of section 337 of the Tariff Act of 1930, 19 U.S.C. 1337, and sections 210.45–210.51 of the Commission's Rules of Practice and Procedure, 19 CFR 210.45–210.51.

Copies of the public versions of the subject IDs, and all other nonconfidential documents filed in connection with this investigation, are or will be available for inspection during official business hours (8:45 a.m. to 5:15 p.m.) in the Office of the Secretary, U.S. International Trade Commission, 500 E Street SW, Washington, DC 20436, telephone 202–205–2000.

By order of the Commission.

Issued: June 28, 1999.

Donna R. Koehnke,

Secretary.

[FR Doc. 99–16928 Filed 7–1–99; 8:45 am]

BILLING CODE 7020–02–P

INTERNATIONAL TRADE COMMISSION

Sunshine Act Meeting

AGENCY HOLDING THE MEETING: United States International Trade Commission.

TIME AND DATE: July 7, 1999 at 2 p.m.

PLACE: Room 101, 500 E Street SW., Washington, DC 20436, Telephone: (202) 205–2000.

STATUS: Open to the public.

MATTERS TO BE CONSIDERED:

1. Agenda for future meeting: none
2. Minutes
3. Ratification List
4. Inv. Nos. 701–TA–380–382 and 731–TA–797–804 (Final) (Stainless Steel Sheet and Strip from France, Germany, Italy, Japan, Korea, Mexico, Taiwan, and the United Kingdom)—briefing and vote. (The Commission will transmit its determination to the Secretary of Commerce on July 19, 1999.)
5. Inv. No. AA1921–162 (Review) (Melamine from Japan)—briefing and vote. (The Commission will transmit its determination to the Secretary of Commerce on July 21, 1999.)
6. Outstanding action jackets:
   (1) Document No. EC–99–012: Approval of final report in Inv. No. 332–403 (Assessment of the Economic Effects on the United States of China's Accession to the WTO).
   (2) Document No. GC–99–057: Regarding Inv. No. 337–TA–412 (Certain Video Graphics Display Controllers and Products Containing Same).

In accordance with Commission policy, subject matter listed above, not disposed of at the scheduled meeting, may be carried over to the agenda of the following meeting.

By order of the Commission.

Issued: June 29, 1999.

Donna R. Koehnke,

Secretary.

[FR Doc. 99–16996 Filed 6–30–99; 12:10 pm]

BILLING CODE 7020–20–P

INTERNATIONAL TRADE COMMISSION

Sunshine Act Meeting

AGENCY HOLDING THE MEETING: United States International Trade Commission.

TIME AND DATE: July 9, 1999 at 11:00 a.m.

PLACE: Room 101, 500 E Street SW, Washington, DC 20436, Telephone: (202) 205–2000.

STATUS: Open to the public.

MATTERS TO BE CONSIDERED:

1. Agenda for future meeting: none
2. Minutes
3. Ratification List
4. Inv. No. 731–TA–827 (Preliminary) (Nitrile Rubber from Korea)—briefing and vote. (The Commission will transmit its determination to the Secretary of Commerce on July 12, 1999.)
5. Inv. No. 731–TA–828 (Preliminary) (Bulk Acetylsalicylic Acid (Aspirin) from China)—briefing and vote. (The Commission will transmit its determination to the Secretary of Commerce on July 12, 1999.)
6. Outstanding action jackets:
   (1) Document No. EC–99–012:

Approval of final report in Inv. No. 332–403 (Assessment of the Economic Effects on the United States of China's Accession to the WTO).

(2) Document No. GC–99–057: Regarding Inv. No. 337–TA–412 (Certain Video Graphics Display Controllers and Products Containing Same).

In accordance with Commission policy, subject matter listed above, not disposed of at the scheduled meeting, may be carried over to the agenda of the following meeting.

By order of the Commission:

Issued: June 29, 1999.

Donna R. Koehnke,

Secretary.

[FR Doc. 99–16997 Filed 6–30–99; 12:10 pm]

BILLING CODE 7020–20–P

DEPARTMENT OF JUSTICE

Justice Management Division; Information Resources Management/ Telecommunications Services Staff Meeting of the Global Criminal Justice Information Network Advisory Committee

AGENCY: Justice Management Division, Information Resources Management, Telecommunications Services, Justice.

ACTION: Notice of meeting of the Global Criminal Justice Information Network Advisory Committee.

SUPPLEMENTARY INFORMATION: Pursuant to section 10(a)(2) of the Federal Advisory Committee Act (Pub. L. 92–463), as amended, notice is hereby given that a meeting of the Global Criminal Justice Information Network Advisory Committee will be held on July 27–28, 1999. The Committee will meet from 9 am–5 pm at the Hyatt Regency Washington Hotel, located at 400 New Jersey Avenue, NW, Washington, DC 20001. The Committee will meet to address the Global Initiative, as described in Initiative A07 ''Access America: Reengineering Through Information Technology''.

This meeting will be open to the public, and registrations will then be accepted on a space available basis. For information on how to register, contact Susan Ruyle, 901 E Street NW, Suite 510, Washington, DC 20530, or call (202) 353–8594. Interested persons whose registrations have been accepted may be permitted to participate in the discussions at the discretion of the meeting chairman and with the approval of the Designated Federal Employee (DFE).

If you need special accommodations due to a disability, please contact Sharon Collins at (202) 393–1306 at least seven (7) days prior to the meeting. Further information with reference to this meeting can be obtained from Kathy Albert, the DFE, 901 E Street NW, Suite 510, Washington, DC 20530, or call (202) 514–3337.

Dated: June 22, 1999.

Kathy Albert,

Global Network Coordinator, Telecommunications Services Staff, Information Resources Management, Justice Management Division, Department of Justice.

[FR Doc. 99–16906 Filed 7–1–99; 8:45 am]

BILLING CODE 4410–AR–M

DEPARTMENT OF JUSTICE

Notice of Lodging of Consent Decree Pursuant to the Comprehensive Environmental Response, Compensation, and Liability Act

Notice is here by given that a consent decree in *United States* v. *PP&L, Inc.*, Civil Action No. 4:CV–99–0922 (M.D. Pa.) was lodged with the court on June 7, 1999.

The proposed decree resolves claims of the United States against PP&L, Inc. under Sections 106 and 107 of the Comprehensive Environmental Response, Compensation and Liability Act, as amended (''CERCLA''), 42 U.S.C. 9606 and 9607, for response costs and actions at the MW Manufacturing Superfund Site in Valley Township, Montour County, PA. The decree embodies a *de minimis* settlement of PP&L's liability at the site and obligates the PP&L to reimburse to the United States $98,860 of response costs.

The Department of Justice will receive, for a period of thirty (30) days from the date of this publication, comments relating to the proposed consent decree. Comments should be addressed to the Assistant Attorney General for the Environment and Natural Resources Division, Department of Justice, Washington, D.C. 20530, and should refer to *United States* v. *PP&L, Inc.*, Civil Action No. 4:CV–99–0922 (M.D. Pa.), DOJ Ref. #90–11–3–1049. Commenters may request an opportunity for a public meeting in the affected area, in accordance with Section 7003(d) of RCRA, 42 U.S.C 6973(d).

The proposed consent decree may be examined at the United States Department of Justice, Environment and Natural Resources Division, Consent Decree Library, 1120 G Street, N.W., 3rd Floor, Washington, D.C. 2005, (202) 624–0892. A copy of the proposed consent decree may be obtained in person or by mail from the Consent Decree Library, 1120 G Street, N.W., 3rd Floor, Washington, D.C. 20005. In requesting a copy, please refer to the referenced case and enclose a check in the amount of $4.00 (25 cents per page reproduction costs), payable to the Consent Decree Library.

Joel M. Gross,

Chief, Environmental Enforcement Section, Environment and Natural Resources Division.

[FR Doc. 99–16910 Filed 7–1–99; 8::45 am]

BILLING CODE 4410–15–M

DEPARTMENT OF JUSTICE

Notice of Lodging of Consent Decree Under the Comprehensive Environmental Response, Compensation, and Liability Act

Notice is hereby given that on June 17, 1999, a proposed Consent Decree (''Consent Decree'') in *United States* versus *Gene T. Jones, et al.*, Civil Action No. 98–C–1049–S was lodged with the United States District Court for the Northern District of Alabama.

In this action the United States sought the recovery of the United States' response costs regarding the Jones Tire and Battery Superfund Site (''the Site'') in Birmingham, Alabama. In the Consent Decree, the Settling Defendants agree to pay to the United States $600,221.87 for past response costs related to the removal conducted by the Environmental Protection Agency. The Settling Defendants consist of the Site operator and 48 generator defendants. The United States also intends to dismiss without prejudice the remaining defendants from the action, thereby resolving the case in its entirety.

The Department of Justice will receive for a period of thirty (30) days from the date of this publication comments relating to the Consent Decree. Comments should be addressed to the Assistant Attorney General of the Environment and Natural Resources Division, Department of Justice, Washington, DC, 20530, and should refer to *United States* versus *Gene T. Jones, et al.*, D.J. Ref. 90–11–2–986/1.

The Consent Decree may be examined at the Office of the United States Attorney, Northern District of Alabama, 200 Robert Vance Federal Bldg., 1800 5th Ave. N, Room 200, Birmingham, AL 35203–2198, at U.S. EPA Region 4, 61 Forsyth Street S.W., Atlanta, Georgia 30303, and at the Consent Decree Library, 1120 G Street, N.W., 3rd Floor, Washington, D.C. 20005, (202) 624–0892. A copy of the Consent Decree may be obtained in person or by mail from

the Consent Decree Library, 1120 G Street, N.W., 3rd Floor, Washington, D.C. 20005. In requesting a copy, please enclose a check in the amount of $16.75 (25 cents per page reproduction cost) payable to the Consent Decree Library.

Joel M. Gross,

Chief, Environmental Enforcement Section, Environment and Natural Resources Division.

[FR Doc. 99–16907 Filed 7–1–99; 8:45 am]

BILLING CODE 4410–15–M

DEPARTMENT OF JUSTICE

Notice of Lodging of Consent Decree Pursuant to the Comprehensive Environmental Response, Compensation and Liability Act

In accordance with Departmental policy, 28 CFR 50.7, and Section 111 of CERCLA, 42 U.S.C. 9622, notice is hereby given that on June 11, 1999, a proposed *De Minimis* Consent Decree in *United States* v. *BASF Corporation, successor to Cook Paint and Varnish Company*., Civil Action No. 99–72978, was lodged with the United States District Court for the Eastern District of Michigan, Southern Division. This consent decree represents a settlement of claims of the United States against BASF Corporation for reimbursement of response costs and injunctive relief in connection with the Metamora Landfill Superfund Site (''Site'') pursuant to the Comprehensive Environmental Response, Compensation and Liability Act, 42 U.S.C. 9601 *et seq.*

Under this settlement with the United States, BASF Corporation, successor to Cook Paint and Varnish Company, will pay $487,206 in reimbursement of response costs incurred by the United States Environmental Protection Agency at the Site.

The Department of Justice will receive for a period of thirty (30) days from the date of this publication comments relating to the proposed Consent Decree. Comments should be addressed to the Assistant Attorney General of the Environment and Natural Resources Division, Department of Justice, Washington, D.C. 20530, and should refer to *United States* v. *BASF Corporation*., D.J. Ref. 90–11–3–289/3.

The proposed Consent Decree may be examined at the Office of the United States Attorney, Eastern District of Michigan, Southern Division, 211 West Fort Street, Suite 2300, Detroit, MI 48226, at the Region 5 Office of the Environmental Protection Agency, 77 West Jackson Street, Chicago, Illinois 60604–3590. and at the Consent Decree Library, 120 G Street, N.W., 3rd Floor, Washington, D.C. 20005, (202) 624–0892. A copy of the proposed Consent Decree may be obtained in person or by mail from the Consent Decree Library, 1120 G Street, N.W., 3rd Floor, Washington, D.C. 20005. In requesting a copy, please enclose a check in the amount of $5.25 (25 cents per page reproduction cost) payable to the Consent Decree Library.

Joel Gross,

Section Chief, Environmental Enforcement Section, Environment and Natural Resources Division.

[FR Doc. 99–16909 Filed 7–1–99; 8:45 am]

BILLING CODE 4410–15–M

DEPARTMENT OF JUSTICE

Notice of Lodging of Consent Decree Under the Comprehensive Environmental Response, Compensation, and Liability Act

Notice is hereby given that a Consent Decree in *United States* v. *SPS Technologies, Inc.*, Civil Action No. 99–2702 (SMO) (D.N.J.) was lodged with the United States District Court for the District of New Jersey on June 11, 1999.

The proposed consent decree resolves claims asserted by the United States, on behalf of the U.S. Environmental Protection Agency (''EPA''), against SPS Technologies, Inc. (''Settling Defendant'') under Section 107 of the Comprehensive Environmental Response, Compensation, and Liability Act (''CERCLA''), 42 U.S.C. 9607. The claims sought to recover past response costs incurred at the DeRewal Chemical Co. site (''Site'') in Kingwood Township, Hunterdon County, New Jersey. The United States alleged that the settling defendant was liable as the generator of the hazardous waste disposed of at the Site under Section 107(a)(3) of CERCLA, 42 U.S.C. 9607(a)(1). The Complaint states claims against the Settling Defendants under Section 107 of CERCLA, 42 U.S.C. 9607, for reimbursement of response costs. The proposed Consent Decree requires the Settling Defendant to reimburse the United States $800,000 in past response costs.

The Department of Justice will accept written comments relating to the proposed consent decree for thirty (30) days from the date of publication of this notice. Please address comments to the Assistant Attorney General, Environment and Natural Resources Division, Department of Justice, P.O. Box 7611, Ben Franklin Station, Washington, D.C. 20044 and refer to *United States* v. *SPS Technologies, Inc.*, Civil Action No. 99–2702 (SMO) (D.N.J.), DJ #90–11–3–06009.

Copies of the proposed consent decree may be examined at the Office of the United States Attorney for the District of New Jersey, 970 Broad Street, Newark, NJ 07102; at the U.S. Environmental Protection Agency, Region II, 290 Broadway, New York, NY 10007–1866; and at the Consent Decree Library, 1120 G Street, N.W., 3rd Floor, Washington, D.C. 20005, (202) 624–0892. A copy of the consent decree may also be obtained in person or by mail at the Consent Decree Library, 1120 G Street, N.W., 3rd Floor, Washington, D.C. 20005. When requesting a copy of the consent decree by mail, please enclose a check in the amount of $5.25 (twenty-five cents per page reproduction costs) payable to the ''Consent Decree Library.''

Joel M. Gross,

Chief, Environmental Enforcement Section, Environment and Natural Resources Division, U.S. Department of Justice.

[FR Doc. 99–16908 Filed 7–1–99; 8:45 am]

BILLING CODE 4410–15–M

DEPARTMENT OF LABOR

Office of the Secretary

Submission for OMB Review; Comment Request

June 23, 1999.

The Department of Labor (DOL) has submitted the following public information collection requests (ICRs) to the Office of Management and Budget (OMB) for review and approval in accordance with the Paperwork Reduction Act of 1995 (Pub. L. 104–13, 44 U.S.C. Chapter 35). A copy of each individual ICR, with applicable supporting documentation, may be obtained by calling the Department of Labor, Departmental Clearance Officer, Ira Mills ({202} 219–5096 ext. 143) or by E-Mail to Mills-Ira@dol. gov.

Comments should be sent to Office of Information and Regulatory Affairs, Attn: OMB Desk Officer for BLS, DM, ESA, ETA, MSHA, OSHA, PWBA, or VETS, Office of Management and Budget, Room 10235, Washington, DC 20503 ({202} 395–7316), within 30 days from the date of this publication in the **Federal Register**.

The OMB is particularly interested in comments which:

- Evaluate whether the proposed collection of information is necessary for the proper performance of the functions of the agency, including whether the information will have practical utility;
- Evaluate the accuracy of the agency's estimate of the burden of the proposed collection of information,

including the validity of the methodology and assumptions used;

• Enhance the quality, utility, and clarity of the information to be collected; and

• Minimize the burden of the collection of information on those who are to respond, including through the use of appropriate automated, electronic, mechanical, or other technological collection techniques or other forms of information technology, e.g., permitting electronic submission of responses.

Agency: Employment and Training Administration.

Title: Contribution Operations.

OMB Number: 1205–0178.

Frequency: Quarterly.

Affected Public: State, Local, or Tribal govt.

Number of Respondents: 53.

Estimated Time Per Respondent: 8 hours and 30 minutes.

Total Burden Hours: 1,802.

Total Annualized capital/startup costs: $0.

Total annual costs (cooperating/maintaining systems or purchasing services): $0.

Description: Provides quarterly data on State agencies' volume and performance in wage processing, promptness of liable employer registration, timeliness of filing contribution and wage reports, extent of tax delinquency, and results of field audit program.

Ira L. Mills,

Departmental Clearance Officer.

[FR Doc. 99–16870 Filed 7–1–99; 8:45 am]

BILLING CODE 4510–30–M

DEPARTMENT OF LABOR

Employment and Training Administration

[TA–W–36,006]

Ansewn Shoe Company, Bangor, ME; Certification Regarding Eligibility To Apply for Worker Adjustment Assistance

In accordance with Section 223 of the Trade Act of 1974 (19 U.S.C. 2273) as amended by the Omnibus Trade and Competitiveness Act of 1988 (Pub. L. 100–418), the Department of Labor herein presents the results of an investigation regarding certification of eligibility to apply for worker adjustment assistance.

In order to make an affirmative determination and issue a certification of eligibility to apply for adjustment assistance each of the group eligibility requirements of Section 222 of the Act must be met. It is determined in this case that all of the requirements have been met.

The investigation was initiated in response to a petition received on April 12, 1999, filed on behalf of workers at Ansewn Shoe Company, Bangor, Maine. The workers were engaged in employment related to the production of men's and women's leather shoes.

The investigation revealed that sales, production and employment at the subject firm have declined during the relevant periods.

A departmental survey was conducted with major customers. The survey revealed that major declining customers of Ansewn discontinued purchasing shoes from the subject firm while importing shoes from sources located overseas during the periods under investigation.

Aggregate U.S. imports of leather shoes increased in the twelve month period January 1997-December 1998 compared with the same twelve month period one year earlier. In 1998 imports were over 800% of the United States production.

Currently, there is a NAFTA-Transitional Adjustment Assistance investigation in progress for the workers of the subject firm. The identifying number is NAFTA–3051.

Conclusion

After careful review of the facts obtained in the investigation, I conclude that increases of imports of articles like or directly competitive with men's and women's leather shoes produced at Ansewn Shoe Company, Bangor, Maine contributed importantly to the decline in sales or production and to the total or partial separation of workers of that firm. In accordance with the provisions of the Act, I make the following certification:

All workers of Ansewn Shoe Company, Bangor, Maine, who became totally or partially separated from employment on or after March 19, 1999, through two years from the date of certification are eligible to apply for adjustment assistance under Section 223 of the Trade Act of 1974.

Signed in Washington, DC this 17th day of June, 1999.

Grant D. Beale,

Acting Director, Office of Trade Adjustment Assistance.

[FR Doc. 99–16876 Filed 7–1–99; 8:45 am]

BILLING CODE 4510–30–M

DEPARTMENT OF LABOR

Employment and Training Administration

[TA–W–35,200 et al.]

Nabors Drilling USA, Inc., East Texas/North Louisiana District, Headquartered in Kilgore, TX, Including Bayard Drilling Technologies; Amended Certification Regarding Eligibility To Apply for Worker Adjustment Assistance

In accordance with Section 223 of the Trade Act of 1974 (19 USC 2273) the Department of Labor issued a Certification of Eligibility to Apply for Worker Adjustment Assistance on December 28, 1998, applicable to workers of Nabors USA, Inc., East Texas/North Louisiana District, headquarters in Kilgore, Texas operating at various locations in Texas and Louisiana. The notice was published in the **Federal Register** on January 25, 1999 (64 FR 3721).

At the request of the company, the Department reviewed the certification for workers of the subject firm. New findings show that Nabors Drilling USA purchased Bayard Drilling Technologies in April, 1999. New information show that some workers separated from employment at Nabors Drilling USA had their wages reported under a separate unemployment insurance (UI) tax account for Bayard Drilling Technologies, Oklahoma City, Oklahoma. The workers provide drilling services related to the exploration and production of crude oil and natural gas.

Based on these findings, the Department is amending the certification to include workers of Bayard Drilling Technologies.

The intent of the Department's certification is to include all workers of Nabor Drilling USA, Inc. adversely affected by increased imports.

The amended notice applicable to TA–W–35,200 is hereby issued as follows:

All workers of East Texas/North Louisiana District of Nabors Drilling USA, Inc., headquartered in Kilgore, Texas (TA–W–35,200), including Bayard Drilling Technologies operating at various locations in Texas (TA–W–35,200A), Louisiana TA–W–35,200B) and Oklahoma (TA–W–35,200D) who became totally or partially separated from employment on or after October 22, 1997 through December 28, 2000 are eligible to apply for adjustment assistance under Section 223 of the Trade Act of 1974.

Signed at Washington, DC this 16th day of June, 1999.

Grant D. Beale,

Acting Director, Office of Trade Adjustment Assistance.

[FR Doc. 99–16872 Filed 7–1–99; 8:45 am]

BILLING CODE 4510–30–M

DEPARTMENT OF LABOR

Employment and Training Administration

[TA–W–35, 598]

NANA Management Services and NANA/Colt Engineering, Anchorage, AK; Dismissal of Application for Reconsideration

Pursuant to 29 CFR 90.18(C) an application for administrative reconsideration was filed with the Acting Director of the Office of Trade Adjustment Assistance for workers at NANA Management Services and NANA/Colt Engineering, Anchorage, Alaska. The application contained no new substantial information which would bear importantly on the Department's determination. Therefore, dismissal of the application was issued.

TA–W–35, 598; NANA Management Services and NANA/Colt Engineering, Anchorage, Alaska (June 23, 1999)

Signed at Washington, DC this 25th day of June, 1999.

Linda G. Poole,

Program Manager, Office of Trade Adjustment Assistance.

[FR Doc. 99–16871 Filed 7–1–99; 8:45 am]

BILLING CODE 4510–30–M

DEPARTMENT OF LABOR

Employment and Training Administration

[TA–W–35,448 Franklin, Georgia; TA–W–35,4448B Lyndhurst, New Jersey]

Private Line Group, Inc.; Amended Certification Regarding Eligibility To Apply for Worker Adjustment Assistance

In accordance with Section 223 of the Trade Act of 1974 (19 U.S.C. 2273) the Department of Labor issued a Certification of Eligibility to Apply for Worker Adjustment Assistance on January 19, 1999, applicable to workers of Private Line Group, Inc., Franklin, Georgia. The notice was published in the **Federal Register** on January 29, 1999 (64 FR 4712).

At the request of the State agency, the Department reviewed the certification for workers of the subject firm. New information shows that worker separations occurred at the Lyndhurst, New Jersey location of Private Line Group, Inc. The Lyndhurst, New Jersey location provided administrative and support function services for Private Line Group's production facilities located in Franklin and Bowman Georgia. The workers produce men's coats and pants.

The intent of the Department's certification is to include all workers of Private Line Group, Inc. who were adversely affected by increased imports. Accordingly, the Department is amending the certification to cover the workers of Private Line Group, Inc., Lyndhurst, New Jersey.

The amended notice applicable to TA–W–35,448 is hereby issued as follows:

All workers of Private Line Group, Inc., Franklin, Georgia (TA–W–35,448), and Lyndhurst, New Jersey (TA–W–35,448B) who became totally or partially separated from employment on or after December 14, 1997 through January 19, 2001 are eligible to apply for adjustment assistance under Section 223 of the Trade Act of 1974.

Signed at Washington, DC this 16th day of June, 1999.

Grant D. Beale,

Acting Director, Office of Trade Adjustment Assistance.

[FR Doc. 99–16875 Filed 7–1–99; 8:45 am]

BILLING CODE 4510–30–M

DEPARTMENT OF LABOR

Employment and Training Administration

[TA–W–35, 792 et al.]

Texaco North American Production a/k/a Texaco Exploration and Production Inc., Texaco Worldwide Upstream Headquarters and Texaco Exploration and Production Technology Houston, TX; Certification Regarding Eligibility To Apply for Worker Adjustment Assistance

In accordance with Section 223 of the Trade Act of 1974 (19 USC 2273) as amended by the Omnibus Trade and Competitiveness Act of 1988 (Pub. L. 100–418), the Department of Labor herein presents the results of an investigation regarding certification of eligibility to apply for worker adjustment assistance.

In order to make an affirmative determination and issue a certification of eligibility to apply for adjustment assistance each of the group eligibility requirements of Section 222 of the Act must be met. It is determined in this case that all of the requirements have been met.

The investigation was initiated in response to a petition received on March 8, 1999, and filed by a company official on behalf of workers at Texaco North American Production, also known as Texaco Exploration and Production Inc., operating at various locations in the above cited states, and at Texaco Worldwide Upstream Headquarters and at Texaco Exploration and Production Technology, in Houston, Texas. The workers are engaged in employment related to the production of crude oil and natural gas.

The investigation revealed that revenues declined at the subject firm in 1998 compared with 1997, and also declined in January through February, 1999, compared with the same period of 1998. Employment also declined in 1999.

United States imports of crude oil increased absolutely and relative to domestic shipments and consumption in November through October, 1997–1998, compared with the same period one year earlier. In January through October, 1998, the ratio of imports to domestic shipments of crude oil was over 133 percent. U.S. imports of dry natural gas also increased in the November through October, 1997–1998 time period.

Conclusion

After careful review of the facts obtained in the investigation, I conclude that increases of imports of articles like or directly competitive with crude oil contributed importantly to the decline in sales or production and to the total or partial separation of workers of the subject firm. In accordance with the provisions of the Act, I make the following certification:

All workers of Texaco North American Production (TNAP), also known as Texaco Exploration and Production Inc., operating in the following cited states,

TA–W–35,792A ALABAMA
TA–W–35,792B CALIFORNIA
TA–W–35,792C COLORADO
TA–W–35,792D ILLINOIS
TA–W–35,792E KANSAS
TA–W–35,792F LOUISIANA
TA–W–35,792G NEW MEXICO
TA–W–35,792H OKLAHOMA
TA–W–35,792I TEXAS (excluding Houston)
TA–W–35,792J UTAH
TA–W–35,792K WYOMING

and all workers of Texaco Worldwide Upstream Headquarters and of Texaco Exploration and Production Technology, in Houston, Texas, who were in support of the TNAP operations cited above, who became totally or partially separated from employment on or after March 1, 1998, through two years from the date of this

certification, are eligible to apply for adjustment assistance under Section 223 of the Trade Act of 1974.

Signed in Washington, DC this 7th day of June, 1999.

Grant D. Beale,

Acting Director, Office of Trade Adjustment Assistance.

[FR Doc. 99–16877 Filed 7–1–99; 8:45 am]

BILLING CODE 4510–30–M

DEPARTMENT OF LABOR

Employment and Training Administration

Investigations Regarding Certifications of Eligibility To Apply for Worker Adjustment Assistance

Petitions have been filed with the Secretary of Labor under Section 221(a) of the Trade Act of 1974 (''the Act'') and are identified in the Appendix to this notice. Upon receipt of these petitions, the Acting Director of the Office of Trade Adjustment Assistance, Employment and Training Administration, has instituted investigations pursuant to Section 221(a) of the Act.

The purpose of each of the investigations is to determine whether the workers are eligible to apply for adjustment assistance under Title II, Chapter 2, of the Act. The investigations will further relate, as appropriate, to the determination of the date on which total or partial separations began or threatened to begin and the subdivision of the firm involved.

The petitioners or any other persons showing a substantial interest in the subject matter of the investigations may request a public hearing, provided such request is filed in writing with the Acting Director, Office of Trade Adjustment Assistance, at the address shown below, not later than July 12, 1999.

Interested persons are invited to submit written comments regarding the subject matter of the investigations to the Acting Director, Office of Trade Adjustment Assistance, at the address shown below, not later than July 12, 1999.

The petitions filed in this case are available for inspection at the Office of the Acting Director, Office of Trade Adjustment Assistance, Employment and Training Administration, U.S. Department of Labor, 200 Constitution Avenue, NW., Washington, DC 20210.

Signed at Washington, DC this 1st day of June 1999.

Linda G. Poole,

Program Manager, Office of Trade Adjustment Assistance.

APPENDIX

[Petitions instituted on 06/01/99]

TA–W	Subject firm (petitioners)	Location	Date of petition	Product(s)
36,297	Woolrich, Inc (Comp)	Soperton, GA	05/21/1999	Men's shirts and women's blouses.
36,298	Beltex Corp (Comp)	Belmont, NC	05/18/1999	T-shirts.
36,299	ABB Power T&D Co., Inc (Wrks).	Bloomington, IN	05/11/1999	Electrical products.
36,300	Timet Kroll Production (Wrks)	Henderson, NV	05/18/1999	Sponge, ingot, slab & scrap.
36,301	Westchester Lace (UNITE)	North Bergen, NJ	04/30/1999	Lace and textiles.
36,302	Leather Co (The) (Wrks)	Philadelphia, PA	05/17/1999	Leather handles for luggage.
36,303	Monde Knitwear Ltd (Comp)	Middle Village, NY	05/18/1999	Knit outerwear.
36,304	Salco Knitting Mills (UNITE)	Brooklyn, NY	05/10/1999	Ladies suits.
36,305	Grand Haven Brass (Wrks)	Grand Haven, MI	05/13/1999	Bronze and metal castings.
36,306	Blount, Inc (Wrks)	Owatonna, MN	05/03/1999	Tree harvesting equipment.
36,307	Little Tikes Co (The) (Comp)	Shippensburg, PA	05/17/1999	Plastic childrens toys.
36,308	Amercord, Inc (Comp)	Lumber City, GA	05/13/1999	Steel wire.
36,309	Grainger Integrated (Comp)	Broussard, LA	05/14/1999	Tool crab administrators.
36,310	Holiday Products (Comp)	El Paso, TX	05/06/1999	Christman stocking, hats & santa suits.
36,311	Sew Crafters, LLC (Comp)	Royston, GA	05/07/1999	Coats and jackets.
36,312	Master Lock Co (Comp)	Milwaukee, WI	05/04/1999	Laminated padlocks.
36,313	Watlow System Integrators (Comp).	Decorah, IA	05/13/1999	Thermal devices.
36,314	Desmon Mills, Inc (Wrks)	Woonsocket, RI	05/13/1999	Wollen spun yarns.
36,315	Vesuvius USA (Wrks)	Zelienople, PA	05/13/1999	Alumina slide gate refractories.
36,316	Kellwood Co.—Sportswear (Comp).	Coffeeville, MS	04/28/1999	Men's denim jeans
36,317	Tubby's Auto Service, Inc (Comp).	Houston, TX	05/11/1999	Auto & rebuildable cars.
36,318	Rocky Mountain Steel Mill (Comp).	Pueblo, CO	05/07/1999	Tubular goods.
36,319	Unger and Fabrick (Wrks)	Los Angeles, CA	05/03/1999	Men's and women's shirts.
36,320	CAC, Inc (Comp)	Edmund, OK	05/13/1999	Oil and gas.
36,321	Blanche (UNITE)	New York, NY	05/11/1999	Lingerie.
36,322	Sheldon Welding & Steel (Comp).	Tioga, ND	05/05/1999	Steel fabrication.
36,323	Royce Hosiery Mills (Wrks)	Conover, NC	05/14/1999	Hosiery.
36,324	Sunset Time (Comp)	Pacoima, CA	05/11/1999	Clocks.
36,325	Fasco Motor Group (Comp)	Russellville, AR	05/07/1999	Fractional horsepower electric motors.
36,326	C and J Manufacturing (Comp)	Blytheville, AR	05/12/1999	Women's clothing.
36,327	Fisher-Rosemount Systems (Wrks).	Burnsville, MN	05/12/1999	RS3 distributed control systems.
36,328	Gulf Publishing Co (Comp)	Houston, TX	05/11/1999	Magazines—energy trade.
36,329	Picker X Ray (IBEW)	Solon, OH	05/13/1999	X-ray machines.
36,330	Allied Signal (PACE)	Metropolis, IL	05/11/1999	Uranium hexafluorid.
36,331	Victoreen, Inc (IAMAW)	Solon, OH	05/07/1999	Radiation monitoring equipment.

APPENDIX—Continued

[Petitions instituted on 06/01/99]

TA–W	Subject firm (petitioners)	Location	Date of petition	Product(s)
36,332	S and S Chemical and Oil (Wrks).	Williston, ND	05/21/1999	Bulk salt and drilling mud.
36,333	Aluminum Co. of America (Wrks).	Alcoa Center, PA	05/15/1999	Hinge pillars.
36,334	Federal Mogul, Worldwide (Wrks).	Manila, AR	05/14/1999	Brake shoes and disc pads.
36,335	Brown and Root Industrial (Wrks).	Odessa, TX	05/03/1999	Gasoline, diesel fuel and jet fuel.
36,336	Collins and Aikman (Comp)	Homer, MI	05/13/1999	Automotive interior parts.
36,337	House of Ronnie (Wrks)	New York, NY	05/19/1999	Ladies and childrens.
36,338	Pillsbury Co., (The) (UFCW)	Blackwood, NJ	05/14/1999	Frozen, unbaked hoagie rolls.
36,339	National Tank Co (Comp)	Corpus Christi, TX	05/24/1999	Oil.

[FR Doc. 99–16878 Filed 7–1–99; 8:45 am]

BILLING CODE 4510–30–M

DEPARTMENT OF LABOR

Employment and Training Administration

[NAFTA–3063]

Logistix, Medical Division, Hillsboro, OR; Notice of Termination of Investigation

Pursuant to Title V of the North American Free Trade Agreement Implementation Act (Pub. L. 103–182) concerning transitional adjustment assistance, hereinafter called (NAFTA–TAA), and in accordance with Section 250(a), Subchapter D, Chapter 2, Title II, of the Trade Act of 1974, as amended (19 USC 2273), and investigation was initiated on March 30, 1999 in response to a petition filed on behalf of workers at Logistix, Medical Division, Hillsboro, Oregon.

Two of the petitioners were not employed at the subject firm location cited, therefore, the petition is not valid. Consequently, further investigation in this case would serve no purpose, and the investigation has been terminated.

Signed at Washington, DC, this 25th day of June 1999.

Linda Poole,

Program Manager, Office of Trade Adjustment Assistance.

[FR Doc. 99–16873 Filed 7–1–99; 8:45 am]

BILLING CODE 4510–30–M

DEPARTMENT OF LABOR

Employment and Training Administration

[NAFTA–03061]

Mark Steel Jewelry, Including Leased Workers of Employer Solutions Group of Utah, Spring City, Utah; Amended Certification Regarding Eligibility To Apply for NAFTA-Transitional Adjustment Assistance

In accordance with Section 250(A), Subchapter D, Chapter 2, Title II, of the Trade Act of 1974 (19 U.S.C. 2273), the Department of Labor issued a Certification for NAFTA Transitional Adjustment Assistance on May 10, 1999, applicable to all workers of Mark Steel Jewelry, located in Spring City, Utah. The notice was published in the **Federal Register** on June 3, 1999 (63 FR 29890).

At the request of the State agency, the Department reviewed the certification for workers of the subject firm. New information provided by the State shows that all workers of Mark Steel Jewelry had their wages reported under a separate unemployment insurance (UI) tax account at Employer Solutions Group of Utah. Workers from Employer Solutions Group of Utah produced jewelry at the Spring City, Utah location of Mark Steel Jewelry.

Based on these findings, the Department is amending the certification to include workers of Employer Solutions Group of Utah who were engaged in the production of jewelry at Mark Steel Jewelry, Spring City, Utah.

The intent of the Department's certification is to include all workers of Mark Steel Jewelry adversely affected by imports from Mexico.

The amended notice applicable to NAFTA–03061 is hereby issued as follows:

All workers of the Mark Steel Jewelry, including leased workers of Employer Solutions Group of Utah, Spring City, Utah engaged in employment related to the production of jewelry for Mark Steel Jewelry, Spring City, Utah who became totally or partially separated from employment on or after March 25, 1998 through May 10, 2001 are eligible to apply for NAFTA–TAA under Section 250 of the Trade Act of 1974.

Signed at Washington, DC this 25th day of June, 1999.

Linda G. Poole,

Program Manager, Office of Trade Adjustment Assistance.

[FR Doc. 99–16874 Filed 7–1–99; 8:45 am]

BILLING CODE 4510–30–M

DEPARTMENT OF LABOR

Employment Standards Administration, Wage and Hour Division

Minimum Wages for Federal and Federally Assisted Construction; General Wage Determination Decisions

General wage determination decisions of the Secretary of Labor are issued in accordance with applicable law and are based on the information obtained by the Department of Labor from its study of local wage conditions and data made available from other sources. They specify the basic hourly wage rates and fringe benefits which are determined to be prevailing for the described classes of laborers and mechanics employed on construction projects of a similar character and in the localities specified therein.

The determinations in these decisions of prevailing rates and fringe benefits have been made in accordance with 29 CFR Part 1, by authority of the Secretary of Labor pursuant to the provisions of the Davis-Bacon Act of March 3, 1931, as amended (46 Stat. 1494, as amended, 40 U.S.C. 276(a) and of other Federal

statutes referred to in 29 CFR Part 1, Appendix, as well as such additional statutes as may from time to time be enacted containing provisions for the payment of wages determined to be prevailing by the Secretary of Labor in accordance with the Davis-Bacon Act. The prevailing rates and fringe benefits determined in these decisions shall, in accordance with the provisions of the foregoing statutes, constitute the minimum wages payable on Federal and federally assisted construction projects to laborers and mechanics of the specified classes engaged on contract work of the character and in the localities described therein.

Good cause is hereby found for not utilizing notice and public comment procedure thereon prior to the issuance of these determinations as prescribed in 5 U.S.C. 553 and not providing for delay in the effective date as prescribed in that section, because the necessity to issue current construction industry wage determinations frequently and in large volume causes procedures to be impractical and contrary to the public interest.

General wage determination decisions, and modifications and supersedes decisions thereto, contain no expiration dates and are effective from their date of notice in the **Federal Register,** or on the date written notice is received by the agency, whichever is earlier. These decisions are to be used in accordance with the provisions of 29 CFR Parts 1 and 5. Accordingly, the applicable decision, together with any modifications issued, must be made a part of every contract for performance of the described work within the geographic area indicated as required by an applicable Federal prevailing wage law and 29 CFR Part 5. The wage rates and fringe benefits, notice of which is published herein, and which are contained in the Government Printing Office (GPO) document entitled ''General Wage Determinations Issued Under The Davis-Bacon And Related Acts,'' shall be the minimum paid by contractors and subcontractors to laborers and mechanics.

Any person, organization, or governmental agency having an interest in the rates determined as prevailing is encouraged to submit wage rate and fringe benefits information for consideration by the Department. Further information and self-explanatory forms for the purpose of submitting this data may be obtained by writing to the U.S. Department of Labor, Employment Standards Administration, Wage and Hour Division, Division of Wage Determinations, 200 Constitution Avenue, NW, Room S–3014, Washington, DC 20210.

Modifications to General Wage Determination Decisions

The number of decisions listed in the Government Printing Office document entitled ''General Wage Determinations Issued Under the Davis-Bacon and Related Acts'' being modified are listed by volume and State. Dates of publication in the **Federal Register** are in parentheses following the decisions being modified.

Volume I

Maine
ME990018 (Mar. 12, 1999)
ME990026 (Mar. 12, 1999)
ME990030 (Mar. 12, 1999)

New Jersey
NJ990002 (Mar. 12, 1999)
NJ990003 (Mar. 12, 1999)
NJ990004 (Mar. 12, 1999)
NJ990007 (Mar. 12, 1999)

New York
NY990002 (Mar. 12, 1999)
NY990003 (Mar. 12, 1999)
NY990004 (Mar. 12, 1999)
NY990005 (Mar. 12, 1999)
NY990006 (Mar. 12, 1999)
NY990007 (Mar. 12, 1999)
NY990008 (Mar. 12, 1999)
NY990010 (Mar. 12, 1999)
NY990011 (Mar. 12, 1999)
NY990012 (Mar. 12, 1999)
NY990013 (Mar. 12, 1999)
NY990015 (Mar. 12, 1999)
NY990016 (Mar. 12, 1999)
NY990017 (Mar. 12, 1999)
NY990018 (Mar. 12, 1999)
NY990019 (Mar. 12, 1999)
NY990020 (Mar. 12, 1999)
NY990021 (Mar. 12, 1999)
NY990022 (Mar. 12, 1999)
NY990025 (Mar. 12, 1999)
NY990026 (Mar. 12, 1999)
NY990031 (Mar. 12, 1999)
NY990032 (Mar. 12, 1999)
NY990033 (Mar. 12, 1999)
NY990034 (Mar. 12, 1999)
NY990036 (Mar. 12, 1999)
NY990037 (Mar. 12, 1999)
NY990039 (Mar. 12, 1999)
NY990040 (Mar. 12, 1999)
NY990041 (Mar. 12, 1999)
NY990042 (Mar. 12, 1999)
NY990043 (Mar. 12, 1999)
NY990044 (Mar. 12, 1999)
NY990045 (Mar. 12, 1999)
NY990046 (Mar. 12, 1999)
NY990047 (Mar. 12, 1999)
NY990049 (Mar. 12, 1999)
NY990050 (Mar. 12, 1999)
NY990051 (Mar. 12, 1999)
NY990060 (Mar. 12, 1999)
NY990073 (Mar. 12, 1999)
NY990075 (Mar. 12, 1999)
NY990076 (Mar. 12, 1999)
NY990077 (Mar. 12, 1999)

Volume II

District of Columbia
DC990001 (Mar. 12, 1999)
DC990003 (Mar. 12, 1999)

Maryland
MD990008 (Mar. 12, 1999)
MD990012 (Mar. 12, 1999)
MD990017 (Mar. 12, 1999)
MD990034 (Mar. 12, 1999)
MD990036 (Mar. 12, 1999)
MD990046 (Mar. 12, 1999)
MD990048 (Mar. 12, 1999)
MD990056 (Mar. 12, 1999)
MD990057 (Mar. 12, 1999)

Pennsylvania
PA990003 (Mar. 12, 1999)
PA990005 (Mar. 12, 1999)
PA990006 (Mar. 12, 1999)
PA990007 (Mar. 12, 1999)
PA990008 (Mar. 12, 1999)
PA990009 (Mar. 12, 1999)
PA990010 (Mar. 12, 1999)
PA990012 (Mar. 12, 1999)
PA990014 (Mar. 12, 1999)
PA990015 (Mar. 12, 1999)
PA990019 (Mar. 12, 1999)
PA990021 (Mar. 12, 1999)
PA990023 (Mar. 12, 1999)
PA990024 (Mar. 12, 1999)
PA990025 (Mar. 12, 1999)
PA990026 (Mar. 12, 1999)
PA990028 (Mar. 12, 1999)
PA990029 (Mar. 12, 1999)
PA990031 (Mar. 12, 1999)
PA990035 (Mar. 12, 1999)
PA990040 (Mar. 12, 1999)
PA990042 (Mar. 12, 1999)
PA990052 (Mar. 12, 1999)
PA990054 (Mar. 12, 1999)
PA990060 (Mar. 12, 1999)
PA990063 (Mar. 12, 1999)

Virginia
VA990005 (Mar. 12, 1999)
VA990006 (Mar. 12, 1999)
VA990013 (Mar. 12, 1999)
VA990018 (Mar. 12, 1999)
VA990022 (Mar. 12, 1999)
VA990023 (Mar. 12, 1999)
VA990025 (Mar. 12, 1999)
VA990031 (Mar. 12, 1999)
VA990033 (Mar. 12, 1999)
VA990036 (Mar. 12, 1999)
VA990052 (Mar. 12, 1999)
VA990065 (Mar. 12, 1999)
VA990067 (Mar. 12, 1999)
VA990078 (Mar. 12, 1999)
VA990079 (Mar. 12, 1999)
VA990080 (Mar. 12, 1999)
VA990085 (Mar. 12, 1999)
VA990087 (Mar. 12, 1999)
VA990088 (Mar. 12, 1999)
VA990092 (Mar. 12, 1999)
VA990099 (Mar. 12, 1999)

Volume III

Florida
FL990001 (Mar. 12, 1999)
FL990009 (Mar. 12, 1999)
FL990013 (Mar. 12, 1999)
FL990017 (Mar. 12, 1999)
FL990032 (Mar. 12, 1999)

Kentucky
KY990001 (Mar. 12, 1999)
KY990007 (Mar. 12, 1999)
KY990029 (Mar. 12, 1999)
KY990044 (Mar. 12, 1999)

North Carolina
NC990001 (Mar. 12, 1999)
NC990003 (Mar. 12, 1999)
NC990008 (Mar. 12, 1999)

Volume IV

Illinois
IL990001 (Mar. 12, 1999)
IL990002 (Mar. 12, 1999)
IL990003 (Mar. 12, 1999)
IL990004 (Mar. 12, 1999)
IL990006 (Mar. 12, 1999)
IL990007 (Mar. 12, 1999)
IL990008 (Mar. 12, 1999)
IL990009 (Mar. 12, 1999)
IL990010 (Mar. 12, 1999)
IL990011 (Mar. 12, 1999)
IL990012 (Mar. 12, 1999)
IL990014 (Mar. 12, 1999)
IL990017 (Mar. 12, 1999)
IL990023 (Mar. 12, 1999)
IL990026 (Mar. 12, 1999)
IL990028 (Mar. 12, 1999)
IL990030 (Mar. 12, 1999)
IL990035 (Mar. 12, 1999)
IL990042 (Mar. 12, 1999)
IL990047 (Mar. 12, 1999)
IL990049 (Mar. 12, 1999)
IL990052 (Mar. 12, 1999)
IL990053 (Mar. 12, 1999)
IL990054 (Mar. 12, 1999)
IL990055 (Mar. 12, 1999)
IL990059 (Mar. 12, 1999)
IL990061 (Mar. 12, 1999)
IL990062 (Mar. 12, 1999)
IL990064 (Mar. 12, 1999)
IL990065 (Mar. 12, 1999)
IL990068 (Mar. 12, 1999)

Indiana
IN990001 (Mar. 12, 1999)
IN990002 (Mar. 12, 1999)
IN990003 (Mar. 12, 1999)
IN990004 (Mar. 12, 1999)
IN990005 (Mar. 12, 1999)
IN990006 (Mar. 12, 1999)
IN990016 (Mar. 12, 1999)
IN990017 (Mar. 12, 1999)
IN990018 (Mar. 12, 1999)
IN990020 (Mar. 12, 1999)
IN990021 (Mar. 12, 1999)
IN990059 (Mar. 12, 1999)
IN990060 (Mar. 12, 1999)
IN990061 (Mar. 12, 1999)

Michigan
MI990004 (Mar. 12, 1999)
MI990064 (Mar. 12, 1999)

Minnesota
MN990001 (Mar. 12, 1999)
MN990007 (Mar. 12, 1999)
MN990008 (Mar. 12, 1999)
MN990015 (Mar. 12, 1999)
MN990107 (Mar. 12, 1999)
MN990027 (Mar. 12, 1999)
MN990031 (Mar. 12, 1999)
MN990035 (Mar. 12, 1999)
MN990039 (Mar. 12, 1999)
MN990045 (Mar. 12, 1999)
MN990058 (Mar. 12, 1999)
MN990059 (Mar. 12, 1999)
MN990061 (Mar. 12, 1999)

Ohio
OH990001 (Mar. 12, 1999)
OH990002 (Mar. 12, 1999)
OH990003 (Mar. 12, 1999)
OH990008 (Mar. 12, 1999)
OH990018 (Mar. 12, 1999)
OH990026 (Mar. 12, 1999)
OH990028 (Mar. 12, 1999)
OH990029 (Mar. 12, 1999)
OH990034 (Mar. 12, 1999)
OH990035 (Mar. 12, 1999)
OH990039 (Mar. 12, 1999)

Wisconsin
WI990001 (Mar. 12, 1999)

Volume V

Iowa
IA990003 (Mar. 12, 1999)
IA990004 (Mar. 12, 1999)
IA990005 (Mar. 12, 1999)
IA990014 (Mar. 12, 1999)

Kansas
KS990002 (Mar. 12, 1999)
KS990006 (Mar. 12, 1999)
KS990008 (Mar. 12, 1999)
KS990009 (Mar. 12, 1999)
KS990012 (Mar. 12, 1999)
KS990016 (Mar. 12, 1999)
KS990022 (Mar. 12, 1999)
KS990025 (Mar. 12, 1999)
KS990061 (Mar. 12, 1999)
KS990063 (Mar. 12, 1999)
KS990069 (Mar. 12, 1999)
KS990070 (Mar. 12, 1999)

Louisiana
LA990005 (Mar. 12, 1999)
LA990009 (Mar. 12, 1999)
LA990015 (Mar. 12, 1999)
LA990018 (Mar. 12, 1999)

New Mexico
NM990001 (Mar. 12, 1999)

Texas
TX990001 (Mar. 12, 1999)
TX990002 (Mar. 12, 1999)
TX990003 (Mar. 12, 1999)
TX990004 (Mar. 12, 1999)
TX990005 (Mar. 12, 1999)
TX990007 (Mar. 12, 1999)
TX990010 (Mar. 12, 1999)
TX990018 (Mar. 12, 1999)
TX990033 (Mar. 12, 1999)
TX990034 (Mar. 12, 1999)
TX990037 (Mar. 12, 1999)
TX990055 (Mar. 12, 1999)
TX990081 (Mar. 12, 1999)
TX990085 (Mar. 12, 1999)

Volume VI

Alaska
AK990001 (Mar. 12, 1999)
AK990002 (Mar. 12, 1999)
AK990005 (Mar. 12, 1999)
AK990006 (Mar. 12, 1999)

Colorado
CO990001 (Mar. 12, 1999)
CO990002 (Mar. 12, 1999)
CO990003 (Mar. 12, 1999)
CO990004 (Mar. 12, 1999)
CO990005 (Mar. 12, 1999)
CO990006 (Mar. 12, 1999)
CO990007 (Mar. 12, 1999)
CO990008 (Mar. 12, 1999)
CO990009 (Mar. 12, 1999)
CO990010 (Mar. 12, 1999)
CO990011 (Mar. 12, 1999)
CO990014 (Mar. 12, 1999)
CO990016 (Mar. 12, 1999)
CO990018 (Mar. 12, 1999)
CO990020 (Mar. 12, 1999)
CO990021 (Mar. 12, 1999)
CO990022 (Mar. 12, 1999)
CO990023 (Mar. 12, 1999)
CO990024 (Mar. 12, 1999)
CO990025 (Mar. 12, 1999)

Oregon
OR990001 (Mar. 12, 1999)
OR990004 (Mar. 12, 1999)
OR990017 (Mar. 12, 1999)

South Dakota
SD990005 (Mar. 12, 1999)
SD990006 (Mar. 12, 1999)

Washington
WA990001 (Mar. 12, 1999)
WA990002 (Mar. 12, 1999)
WA990003 (Mar. 12, 1999)
WA990005 (Mar. 12, 1999)
WA990007 (Mar. 12, 1999)
WA990008 (Mar. 12, 1999)
WA990011 (Mar. 12, 1999)
WA990023 (Mar. 12, 1999)

Wyoming
WY990004 (Mar. 12, 1999)
WY990009 (Mar. 12, 1999)
WY990013 (Mar. 12, 1999)
WY990023 (Mar. 12, 1999)

Volume VII

Arizona
AZ990003 (Mar. 12, 1999)

California
CA990001 (Mar. 12, 1999)
CA990002 (Mar. 12, 1999)
CA990004 (Mar. 12, 1999)
CA990009 (Mar. 12, 1999)
CA990027 (Mar. 12, 1999)
CA990028 (Mar. 12, 1999)
CA990029 (Mar. 12, 1999)
CA990030 (Mar. 12, 1999)
CA990031 (Mar. 12, 1999)
CA990032 (Mar. 12, 1999)
CA990033 (Mar. 12, 1999)
CA990034 (Mar. 12, 1999)
CA990035 (Mar. 12, 1999)
CA990036 (Mar. 12, 1999)
CA990037 (Mar. 12, 1999)
CA990038 (Mar. 12, 1999)
CA990039 (Mar. 12, 1999)
CA990040 (Mar. 12, 1999)
CA990041 (Mar. 12, 1999)

General Wage Determination Publication

General wage determinations issued under the Davis-Bacon and related Acts, including those noted above, may be found in the Government Printing Office (GPO) document entitled ''General Wage Determinations Issued Under The Davis-Bacon and Related Acts.'' This publication is available at each of the 50 Regional Government Depository Libraries and many of the 1,400 Government Depository Libraries across the country.

The general wage determinations issued under the Davis-Bacon and related Acts are available electronically by subscription to the FedWorld Bulletin Board System of the National Technical Information Service (NTIS) of the U.S. Department of Commerce at 1–800–363–2068.

Hard-copy subscriptions may be purchased from: Superintendent of Documents, U.S. Government Printing Office, Washington, DC 20402, (202) 512–1800.

When ordering hard-copy subscription(s), be sure to specify the State(s) of interest, since subscriptions

may be ordered for any or all of the seven separate volumes, arranged by State. Subscriptions include an annual edition (issued in January or February) which includes all current general wage determinations for the States covered by each volume. Throughout the remainder of the year, regular weekly updates are distributed to subscribers.

Signed at Washington, DC this 25th day of June 1999.

Carl J. Poleskey,

Chief, Branch of Construction Wage Determinations.

[FR Doc. 99–16604 Filed 7–1–99; 8:45 am]

BILLING CODE 4510–27–M

DEPARTMENT OF LABOR

Occupational Safety and Health Administration

[Docket No. ICR–99–11]

Proposed Information Collection Request Submitted for Public Comment and Recommendations; OSHA Data Collection System (1218–0209)

ACTION: Notice.

SUMMARY: The Department of Labor, as part of its continuing effort to reduce paperwork and respondent burden, conducts a pre-clearance consultation program to provide the general public and Federal agencies with an opportunity to comment on proposed and/or continuing collections of information in accordance with the Paperwork Reduction Act of 1995 (PRA95) [44 U.S.C. 3506(c)(2)(A)]. This program helps to ensure that requested data can be provided in the desired format, reporting burden (time and financial resources) is minimized, collection instruments are clearly understood, and the impact of collection requirements on respondents can be properly assessed. Currently, the Occupational Safety and Health Administration is soliciting comments concerning the proposed extension of the information collection request for the OSHA Data Collection System. A copy of the proposed information collection request (ICR) can be obtained by contacting the office listed below in the addressee section of this notice.

DATES: Written comments must be submitted to the office listed in the addressee section below on or before August 31, 1999.

The Department of Labor is particularly interested in comments which:

- Evaluate whether the proposed collection of information is necessary for the proper performance of the functions of the agency, including whether the information will have practical utility;
- Evaluate the accuracy of the agency's estimate of the burden of the proposed collection of information, including the validity of the methodology and assumptions used;
- Enhance the quality, utility, and clarity of the information to be collected; and
- Minimize the burden of the collection of information on those who are to respond, including through the use of appropriate automated, electronic, mechanical, or other technological collection techniques or other forms of information technology, e.g., permitting electronic submissions of responses.

ADDRESSES: Comments are to be submitted to the Docket Office, Docket No. ICR 99–11, U.S. Department of Labor, Room N–2625, 200 Constitution Ave., NW, Washington, DC 20210, telephone (202) 693–2350. Written comments limited to 10 pages or less in length may also be transmitted by facsimile to (202) 693–1648.

FOR FURTHER INFORMATION CONTACT: Dave Schmidt, Office of Statistics, Occupational Safety and Health Administration, U.S. Department of Labor, Room N3644, 200 Constitution Avenue, NW, Washington, DC 20210, telephone: (202) 693–1886. Copies of the referenced information collection request are available for inspection and copying in the Docket Office and will be mailed to persons who request copies by telephoning Dave Schmidt at (202) 693–1886 or Barbara Bielaski at (202) 693–2444. For electronic copies of the OSHA Data Collection System information collection request, contact OSHA's WebPage on the Internet at http://www.osha.gov/.

SUPPLEMENTARY INFORMATION:

I. Background

To meet many of OSHA's program needs, OSHA is proposing to continue its data initiative to collect occupational injury and illness data and information on number of workers employed and number of hours worked from establishments in portions of the private sector. OSHA will collect 1999 data from up to 80,000 employers required to create and maintain records pursuant to CFR Part 1904. These data will allow OSHA to calculate occupational injury and illness rates and to focus its efforts on individual workplaces with ongoing serious safety and health problems. Successful implementation of the data collection initiative is critical to OSHA's reinvention efforts and the data requirements tied to the Government Performance and Results Act (GPRA).

II. Current Actions

This notice requests public comment on an extension of the current OMB approval of the paperwork requirements for the OSHA Data Collection System.

Type of Review: Extension of currently approved collection.

Agency: Occupational Safety and Health Administration.

Title: OSHA Data Collection System.

OMB Number: 1218–0209.

Agency Number: ICR–99–11.

Affected Public: Business or other for-profit and State, Local or Tribal Government.

Cite/Reference/Form/etc.: OSHA Form 196A and OSHA form 196B.

Total Respondents: 80,000.

Frequency: Annually.

Average Time per Response: 30 minutes.

Estimated Total Burden Hours: 35,000 hours.

Comments submitted in response to this comment request will be summarized and/or included in the request for Office of Management and Budget approval of the information collection request; they will also become a matter of public record.

Dated: June 29, 1999.

Charles N. Jeffress,

Assistant Secretary for Occupational Safety and Health.

[FR Doc. 99–16879 Filed 7–1–99; 8:45 am]

BILLING CODE 4510–26–M

FEDERAL MINE SAFETY AND HEALTH REVIEW COMMISSION

Sunshine Act Meeting

June 29, 1999.

TIME AND DATE: 10:00 a.m., Wednesday, July 21, 1999.

PLACE: Room 6005, 6th Floor, 1730 K Street, N.W., Washington, D.C.

STATUS: Open.

MATTERS TO BE CONSIDERED: The Commission will hear oral argument on the following:

1. *Morgan* v. *Arch of Illinois,* Docket No. LAKE 98–17–D (Issues include whether the miner's discrimination complaint should have been dismissed because it was untimely filed and whether substantial evidence supports the judge's dismissal of the miner's discrimination complaint.)

TIME AND DATE: The Commission meeting will commence following upon the conclusion of oral argument in *Morgan* v. *Arch of Illinois,* Docket No.

LAKE 98–17–D, which commences at 10:00 a.m. on Wednesday, July 21, 1999.

PLACE: Room 6005, 6th Floor, 1730 K Street, N.W., Washington, D.C.

STATUS: Closed [Pursuant to 5 U.S.C. § 552b(c)(10)].

MATTERS TO BE CONSIDERED: It was determined by a unanimous vote of the Commission that the Commission consider and act upon the following in closed session:

1. *Morgan* v. *Arch of Illinois*, Docket No. LAKE 98–17–D (See oral argument listing, supra, for issues.)

TIME AND DATE: 10:00 a.m., Wednesday, July 28, 1999.

PLACE: Room 6005, 6th Floor, 1730 K Street, N.W., Washington, D.C.

STATUS: Open.

MATTERS TO BE CONSIDERED: The Commission will consider and act upon the following:

1. Hubb Corp., Docket No. KENT 97–302 (Issues include whether substantial evidence supports the judge's finding that Hubb's violations were or high gravity and whether the judge failed to make necessary findings when assessing the penalties against Hubb.)

Any person attending an open meeting who requires special accessibility features and/or auxiliary aids, such as sign language interpreters, must inform the Commission's in advance of those needs. Subject to 29 CFR § 2706.150(a)(3) and § 2706.160(d).

CONTACT PERSON FOR MORE INFORMATION: Jean Ellen (202) 653–5629/(202) 708–9300 for TDD Relay/1–800–877–8339 for toll free.

Jean H. Ellen,

Chief Docket Clerk.

[FR Doc. 99–17082 Filed 6–30–99; 3:40 pm]

BILLING CODE 6735–01–M

NUCLEAR REGULATORY COMMISSION

Documents Containing Reporting or Recordkeeping Requirements: Office of Management and Budget (OMB) Review

AGENCY: U.S. Nuclear Regulatory Commission (NRC).

ACTION: Notice of the OMB review of information collection and solicitation of public comment.

SUMMARY: The NRC has recently submitted to OMB for review the following proposal for the collection of information under the provisions of the Paperwork Reduction Act of 1995 (44 U.S.C. Chapter 35).

1. *Type of submission, new, revision, or extension:* Revision.

2. *The title of the information collection:* Proposed rule, entitled ''Reporting Requirements for Nuclear Power Reactors,'' 10 CFR 50.

3. *The form number if applicable:* NRC Form 366, ''Licensee Event Report (LER).''

4. *How often the collection is required:* Events involving reactors are reportable on occurrence.

5. *Who will be required or asked to report:* Holders of operating licenses for commercial nuclear power plants.

6. *An estimate of the number of responses:* 1,200 telephone reports per year under 10 CFR 50.72(b) (a reduction of 200) and 1200 written reports per year under 10 CFR 50.73(a) (a reduction of 400) for a total reduction of 600 reports per year.

7. *The estimated number of annual respondents:* 104.

8. *An estimate of the total number of hours needed annually to complete the requirement or request:*

—1,800 hours to make 1,400 telephone notifications.

—60,000 hours to provide 1,200 written LERs.

—In addition, there is a one-time implementation burden of about 20,800 hours (or 6,933 hours per year over three years) to revise reporting procedures and conduct training.

—The total burden reduction is 13,367 hours.

9. *An indication of whether Section 3507(d), Pub. L. 104–13 applies:* Applies.

10. *Abstract:* Sections 10 CFR 50.72 and 50.73 are being modified to: (1) Better align the reporting requirements with the NRC's current reporting needs; (2) reduce the reporting burden, consistent with the NRC's reporting needs; (3) clarify the reporting requirements where needed; and (4) maintain consistency with NRC actions to improve integrated plant assessments. NRC Form 366 is being modified to reflect changes in 10 CFR 50.73.

Submit, by August 2, 1999, comments that address the following questions:

1. Is the proposed collection of information necessary for the NRC to properly perform its functions? Does the information have practical utility?

2. Is the burden estimate accurate?

3. Is there a way to enhance the quality, utility, and clarity of the information to be collected?

4. How can the burden of the information collection be minimized, including the use of automated collection techniques or other forms of information technology?

A copy of the submittal may be viewed free of charge at the NRC Public Document Room, 2120 L Street, NW (lower level), Washington, DC. The proposed rule indicated in ''Reporting Requirements for Nuclear Power Reactors'' is or has been published in the **Federal Register** within several days of the publication date of this **Federal Register** Notice. Instructions for accessing the electronic OMB clearance package for the rulemaking have been appended to the electronic rulemaking. Members of the public may access the electronic OMB clearance package by following the directions for electronic access provided in the preamble to the titled rulemaking.

Comments and questions should be directed to the OMB reviewer by August 2, 1999: Erik Godwin, Office of Information and Regulatory Affairs (3150–0011 and –0104), NEOB–10202, Office of Management and Budget, Washington, DC 20503.

Comments can also be submitted by telephone at (202) 395–3087.

The NRC Clearance Officer is Brenda Jo Shelton, 301–415–7233.

Dated at Rockville, Maryland, this 23rd day of June 1999.

For the Nuclear Regulatory Commission.

Brenda Jo Shelton,

Clearance Officer, Office of the Chief Information Officer.

[FR Doc. 99–16935 Filed 7–1–99; 8:45 am]

BILLING CODE 7590–01–P

POSTAL SERVICE BOARD OF GOVERNORS

Sunshine Act Meeting

TIMES AND DATES: 1:00 p.m., Monday, July 12, 1999; 8:30 a.m., Tuesday, July 13, 1999.

PLACE: Washington, D.C., at U.S. Postal Service Headquarters, 475 L'Enfant Plaza, S.W., in the Benjamin Franklin Room.

STATUS: July 12 (Closed); July 13 (Open).

MATTERS TO BE CONSIDERED:

Monday, July 12—1:00 p.m. (Closed)

1. Postal Rate Commission Opinion and Recommended Decision in Docket No. MC99–3, Periodicals Classification Change.
2. Rate Case Briefing.
3. Personnel Matters.
4. Compensation Issues.

Tuesday, July 13—8:30 a.m. (Open)

1. Minutes of the Previous Meetings, June 7–8, and June 21–22, 1999.
2. Remarks of the Postmaster General/ Chief Executive Officer.
3. Quarterly Report on Service Performance.

4. Quarterly Report on Financial Results.
5. Environmental Program Update.
6. Capital Investment.
   a. Universal Transport System Prototype.
7. Tentative Agenda for the August 2–3, 1999, meeting in Seattle, Washington.

CONTACT PERSON FOR MORE INFORMATION: Thomas J. Koerber, Secretary of the Board, U.S. Postal Service, 475 L'Enfant Plaza, S.W., Washington, D.C. 20260–1000. Telephone (202) 268–4800.

Thomas J. Koerber,

Secretary.

[FR Doc. 99–17083 Filed 6–30–99; 3:43 pm]

BILLING CODE 7710–12–M

POSTAL SERVICE

Privacy Act of 1974, System of Records

AGENCY: Postal Service.

ACTION: Notice of new system of records.

SUMMARY: The purpose of this document is to publish notice of a new Privacy Act system of records, USPS 210.040, Contractor Records—Supplier and Contractor Records. The new system contains information about individuals and small businesses who have expressed an interest in or have entered into contracts with the Postal Service.

DATES: Any interested party may submit written comments on the proposed new system of records. This proposal will become effective without further notice on August 11, 1999, unless comments received on or before that date result in a contrary determination.

ADDRESSES: Written comments on this proposal should be mailed or delivered to: Administration and FOIA, United States Postal Service, 475 L'Enfant Plaza SW RM 8141, Washington, DC 20260–5202. Copies of all written comments will be available at the above address for public inspection and photocopying between 8 a.m. and 4:45 p.m., Monday through Friday.

FOR FURTHER INFORMATION CONTACT: Betty Sheriff (202) 268–2608.

SUPPLEMENTARY INFORMATION: The Postal Service has wide-ranging needs for goods and services resulting in contracts not only with large companies, but also with individuals and independently owned and operated businesses. The independently owned and operated businesses provide painting, lockbox installation, building repair, contract postal unit services, transportation, and a myriad of other goods and services.

In recent years, the Postal Service has increased its commitment to providing diverse suppliers, such as small businesses, with open access to contract opportunities. Most resulting supplier information collected is not covered by the Privacy Act. To the extent the Postal Service collects information about individuals and small business owners through open solicitations or issuance of contracts, it views that information as pertaining to the individual in an entrepreneurial, as opposed to personal, capacity. However, the Postal Service recognizes that some information, such as an address or a social security number, could be identifiable with both an individual and a business. For that reason, this system of records is established to cover such information.

Pursuant to 5 U.S.C. 552a(e)(11), interested persons are invited to submit written data, views, or arguments on this proposal. A report of the following proposed system has been sent to Congress and to the Office of Management and Budget for their evaluation.

USPS 210.040

SYSTEM NAME:

Contractor Records—Supplier and Contractor Records, USPS 210.040.

SYSTEM LOCATION:

Purchasing and Materials offices (Headquarters Purchasing, Purchasing & Materials Service Centers, Topeka Purchasing Service Center, Major Facilities Purchasing, and National Mail Transportation Purchasing); Facilities offices (Headquarters Facilities, Major Facilities Office, Facilities Service Offices, and satellite offices); Distribution Network Offices; Administrative Service Offices at the 85 district offices; Maintenance Support staff doing repair and alteration work in the areas; and postal organizations that have received a special delegation of contracting authority.

CATEGORIES OF INDIVIDUALS COVERED BY THE SYSTEM:

Suppliers with whom the Postal Service contracts for the furnishing of supplies and equipment; mail transportation, construction, construction management, maintenance, architect and engineering, environmental, real estate, and other related services; and prospective suppliers and offerors of those goods and services.

Note: Records in this system that mention identifiable individuals consist primarily of proprietary or commercial information. However, some of the records in the system that pertain to individuals may reflect personal information. Only the records reflecting information about an individual are subject to the Privacy Act. The system also contains records concerning corporations and other business entities. These records are not subject to the Privacy Act.

CATEGORIES OF RECORDS IN THE SYSTEM:

Name, address, telephone number, fax number, e-mail address, social security number, tax identification number, socioeconomic status; information about business type and goods or services offered; contract number, dollar value of the contract, and related information; and proprietary proposal information and financial statements.

AUTHORITY FOR MAINTENANCE OF THE SYSTEM:

39 U.S.C. 401.

PURPOSE(S):

Information in this system is used to make informed decisions in the contracting process and to provide information for administering contracts and financial recordkeeping, and upon which to base future purchasing decisions.

ROUTINE USES OF RECORDS MAINTAINED IN THE SYSTEM, INCLUDING CATEGORIES OF USERS AND THE PURPOSES OF SUCH USES:

General routine use statements a, b, c, d, e, f, g, h, j, k, l, and m listed in the prefatory statement at the beginning of the Postal Service's published system notices apply to this system. Other routine uses are as follows:

1. Solicitation mailing lists may be disclosed when, in the judgment of the contracting officer, a purchase is highly competitive and competition will not be harmed by the release, or to provide an opportunity for potential subcontractors seeking business.
2. To a federal, state, or local agency, financial institution, or other appropriate entity for the purpose of verifying an individual's or entity's eligibility or suitability for engaging in a transaction.
3. To any member of the public, a list of lessors of real or personal property to the Postal Service.
4. To any member of the public, a list of entities with whom the Postal Service transacts for goods or services, interests in real property, construction, financial instruments, or intellectual property.
5. To any member of the public, the identity of a successful offeror.

POLICIES AND PRACTICES FOR STORING, RETRIEVING, ACCESSING, RETAINING, AND DISPOSING OF RECORDS IN THE SYSTEM:

STORAGE:

Paper files and various computer systems that track issued contracts, property lessors, and offerors of goods or services.

RETRIEVABILITY:

By name of individual or business; contract number; tax identification number/social security number; and leased facility (for lessor information).

SAFEGUARDS:

Paper records are accessible only by authorized postal employees and are secured in file cabinets in areas that are restricted during on-duty hours and are locked during non-duty hours. Access to automated records is restricted by computer security technology including the use of passwords. Access is granted on an official need-to-know basis.

RETENTION AND DISPOSAL:

(a) Contract Case Files—The case file is closed at the end of the fiscal year in which it becomes inactive and disposed of 6 years from that date.

(b) Unsuccessful Proposals—Disposed of 1 year after contract is awarded.

(c) Leased Real Estate files—The lease file is closed at the end of the calendar year in which the lease or rental agreement expires or terminates and disposed of 6 years and 3 months from that date.

(d) Computerized contractor, lessor, and prospective supplier information is maintained indefinitely.

SYSTEM MANAGER(S) AND ADDRESS:

VICE PRESIDENT, PURCHASING AND MATERIALS, UNITED STATES POSTAL SERVICE, 475 L'ENFANT PLAZA SW, WASHINGTON DC 20260–6200

VICE PRESIDENT, FACILITIES, UNITED STATES POSTAL SERVICE, 4301 WILSON BLVD STE 300, ARLINGTON VA 22203–1861

NOTIFICATION PROCEDURE:

Individuals wanting to know whether information about them is maintained in this system of records must address inquiries in writing to the system manager(s). Inquiries must contain name and contract number or other identifying information.

RECORD ACCESS PROCEDURES:

Requests for access must be made in accordance with the Notification Procedure above and the Postal Service Privacy Act regulations regarding access to records and verification of identity under 39 CFR 266.6.

CONTESTING RECORD PROCEDURES:

See Notification and Record Access Procedures above.

RECORD SOURCE CATEGORIES:

Information is furnished by records subjects.

Stanley F. Mires,

Chief Counsel, Legislative.

[FR Doc. 99–16925 Filed 7–1–99; 8:45 am]

BILLING CODE 7710–12–P

RAILROAD RETIREMENT BOARD

Agency Forms Submitted for OMB Review

SUMMARY: In accordance with the Paperwork Reduction Act of 1995 (44 U.S.C. Chapter 35), the Railroad Retirement Board (RRB) has sumitted the following proposal(s) for the collection of information to the office of Management and Budget for review and approval.

Summary of Proposal(s)

(1) *Collection title*: Request for Medicare Payment.

(2) *Form(s) submitted*: G–740s,–HCFA–1500.

(3) *OMB Number:* 3220–0131.

(4) *Expiration date of current OMB clearance*: 08/31/1999.

(5) *Type of request*: Extension of a currently approved collection.

(6) *Respondents*: Individuals or households, business or other for-profit.

(7) *Estimated annual number of respondents:* See Justification (Item No. 12).

(8) *Total annual responses:* 1.

(9) *Total annual reporting hours:* 1.

(10) *Collection description*: The Railroad Retirement Board (RRB) administers the Medicare program for persons covered by the Railroad Retirement System. The collection obtains the information needed by the United Healthcare Insurance Company, the RRB's carrier, to pay claims for services covered under Part B of the program.

Additional Information or Comments: Copies of the form and supporting documents can be obtained from Chuck Mierzwa, the agency clearance officer (312-751-3363). Comments regarding the information collection should be addressed to Ronald J. Hodapp, Railroad Retirement Board, 844 North Rush Street, Chicago, Illinois, 60611–2092 and the OMB reviewer, Laurie Schack (202–395–7316), Office of Management and Budget, Room 10230, New Executive Office Building, Washington, DC 20503.

Chuck Mierzwa,

Clearance Officer.

[FR Doc. 99–16844 Filed 7–1–99; 8:45 am]

BILLING CODE 7905–01–M

SECURITIES AND EXCHANGE COMMISSION

[Rel. No. IA–1806; File No. 803–132]

Goldman Sachs Asset Management, et al.; Notice of Application

June 25, 1999.

AGENCY: Securities and Exchange Commission (''SEC'').

ACTION: Notice of application for exemption under the Investment Advisers Act of 1940 (''Advisers Act'').

APPLICANTS: (Goldman Sachs Asset Management (''GSAM'') and Hirtle Callaghan Trust (''Trust'').

RELEVANT ADVISERS ACT SECTIONS: Exemption requested under section 206A of the Advisers Act from section 205 of the Advisers Act and Advisers Act rule 205–1.

SUMMARY OF APPLICATION: Applicants request an order permitting GSAM to charge a performance fee based on the performance of that portion of a Trust portfolio managed by GSAM (''GSAM Account''). Applicants further request that the order permit them to compute the performance-related portion of the fee using changes in the GSAM Account's gross asset value rather than net asset value.

FILING DATES: The application was filed on June 22, 1998, and amended on December 21, 1998, and May 25, 1999.

HEARING OR NOTIFICATION OR HEARING: An order granting the application will be issued unless the SEC orders a hearing. Interested persons may request a hearing by writing to the SEC's Secretary and serving applicants with copies of the request, personally or by mail. Hearing requests should be received by the SEC by 5:30 p.m. on July 20, 1999, and should be accompanied by proof of service on applicants, in the form of an affidavit or, for lawyers, a certificate of service. Hearing requests should state the nature of the writer's interest, the reason for the request, and the issues contested. Persons may request notification of a hearing by writing to the SEC's Secretary.

ADDRESSES: Secretary, SEC, 450 5th Street, NW., Washington, DC 20549–0609. Applicant, Goldman Sachs Asset Management, One New York Plaza, New York, New York 10004. Applicant, The Hirtle Callaghan Trust, 575 East Swedesford Road, Wayne, Pennsylvania 19087.

FOR FURTHER INFORMATION CONTACT: Lori Price, Senior Counsel, at (202) 942–0531, or Jennifer Sawin, Special Counsel, at (202) 942–0532 (Division of Investment Management, Task Force on Investment Adviser Regulation).

SUPPLEMENTARY INFORMATION: The following is a summary of the application. The complete application may be obtained for a fee at the SEC's Public Reference Branch.

Applicant's Representations

1. GSAM is a separate operating division of Goldman Sachs & Co. (''Goldman Sachs''), an investment adviser registered with the SEC under the Advisers Act.

2. The Trust is an open-end management investment company registered with the SEC under the Investment Company Act of 1940. The Trust was organized by Hirtle, Callaghan & Co. (''Hirtle Callaghan''), an investment adviser registered with the SEC under the Advisers Act. The Trust is a series company that currently consists of seven separate investment portfolios. Shares of the Trust are available only to clients of Hirtle Callaghan or clients of financial intermediaries, such as investment advisers, that are acting in a fiduciary capacity with investment discretion and that have established relationships with Hirtle Callaghan.

3. Hirtle Callaghan serves as a ''manager of managers'' for the Trust. Pursuant to its agreement with the Trust, Hirtle Callaghan is not authorized to exercise investment discretion with respect to the Trust's assets. Hirtle Callaghan is responsible for monitoring the overall investment performance of the Trust's portfolios and the performance of the portfolio managers who manage the Trust's portfolios. Hirtle Callaghan also may from time to time recommend that the Trust's Board of Trustees retain additional portfolio managers or terminate existing portfolio managers. Authority to select new portfolio managers and reallocate assets among the portfolio managers, however, resides with the Trust's Board.

4. GSAM and Jennison Associates Capital Corp. (''Jennison'') provide portfolio management services to the Growth Equity Portfolio (''Portfolio''), one series of the Trust. Pursuant to a portfolio management agreement, GSAM provides portfolio management services for a portion of the Portfolio's assets that the Trust's Board allocates to GSAM (''GSAM Account''). Each of GSAM and Jennison manages a separate portion of the Portfolio, each acting as though it were advising a separate investment company. Percentage limitations on investments are applied to each portion of the Portfolio without regard to investments in the other adviser's portion of the Portfolio. Each adviser receives a printout of portfolio positions from the Trust or its custodian that contains only information about the portion of the Portfolio assigned to it and not about the positions held by the Portfolio as a whole. Each adviser generally is responsible for preparing reports to the Trust and the Board only with respect to its discrete portion of the Portfolio.

5. Neither GSAM nor Goldman Sachs is affiliated with Hirtle Callaghan, the Trust, or Jennison.

6. GSAM's services to the Trust are limited to investment selection for the GSAM Account, placement of transactions for execution and certain compliance functions directly related to such services. GSAM does not act as a distributor or sponsor for the Trust or Portfolio. No member of the Trust's Board is affiliated with GSAM. GSAM currently receives a fee at the annual rate of 0.30 percent of the average daily net assets of the GSAM Account, payable monthly.

7. On November 12, 1997, the Trust's Board approved an amendment to the portfolio management agreement between GSAM and the Trust under which the existing fee structure would be replaced with a fee structure that includes a performance component. On January 13, 1998, the shareholders of the Portfolio approved the amendment to the agreement.[1]

8. Under the proposed fee arrangement, GSAM would receive an initial fee at the annual rate of 0.30 percent of the average daily net assets of the GSAM Account, payable quarterly, for each of the first three quarters following the date on which the proposed fee arrangement becomes effective. At the end of the fourth quarter, GSAM would begin to receive a base fee, payable quarterly, at an annual rate of 0.30 percent of the average daily net assets of the GSAM Account. The base fee would be increased or decreased by a Performance Component. The Performance Component would equal 25 percent of the amount by which the gross performance of the GSAM Account, during the 12 months immediately preceding the calculation date, exceeded or underperformed the sum of (i) the total return of the Russell 1000 Growth Index (''Index'') plus (ii) 30 basis points. Gross performance does not give effect to the Portfolio's expenses, but does reflect the effect (*i.e.*, reducing performance) of all applicable brokerage and transaction costs. The maximum annual fee payable for any 12 month period would not exceed 50 basis points, and the minimum fee payable would be 10 basis points.[2]

Applicants' Legal Analysis

1. Section 205(a)(1) of the Advisers Act generally prohibits an investment adviser from entering into any investment advisory agreement that provides for compensation to the adviser on the basis of a share of capital gains or capital appreciation of a client's account.

2. Section 205(b) of the Advisers Act provides a limited exception to this prohibition, permitting an adviser to charge a registered investment company and certain other entities a fee that increases and decreases ''proportionately with the investment performance of the investment company or fund over a specified period inr elation to the investment record of an appropriate index of securities prices or such other measure of investment performance as the [SEC] by rule, regulation or order may specify.''

3. Rule 205–1 requires that the investment performance of an investment company be computed based on the change in the net (of all expenses and fees) asset value per share of the investment company.

4. Applicants request exemptive relief from section 205 and rule 205–1 to permit them to charge the proposed fee (i) Applying the proposed fee only to the GSAM Account and not to the Portfolio as a whole, and (ii) computing the Performance Component measured by the change in the GSAM Account's gross asset value, rather than its net asset value. Applicants also request exemptive relief for GSAM and its affiliates[3] to enter into similar fee arrangements with other investment

[1] The proxy statement associated with this meeting specifically informed shareholders that, if approved by the shareholders, the proposed fee would not become effective until the first calendar quarter following receipt of assurances from the SEC that calculating the fee as proposed would not be viewed as inconsistent with the Advisers Act, and that there could be no guarantee that the SEC would give such assurances. The shareholders of the Portfolio also approved the current agreement between GSAM and the Trust, which was approved by the Trust's Board on September 12, 1997. The Trust's Board replaced another investment adviser with GSAM as a portfolio manager to the Portfolio on September 29, 1997.

[2] If application of the Performance Component would result in an annual fee at a rate lower than 10 basis points, the amount of any excess fee paid for the first year would be credited to the Portfolio in subsequent quarters before additional fee amounts would be payable to GSAM. If the portfolio management agreement between the Trust and GSAM is terminated, the Trust would not recoup any outstanding excess fees that had been paid in previous quarters.

[3] Affiliates in this context would include Goldman Sachs Funds Management, L.P., Goldman Sachs Asset Management International, and any other investment adviser that is both registered with the SEC under the Advisers Act and controls, is controlled by, or is under common control with, GSAM.

companies, provided certain criteria are met.

5. Applicants state that Congress, in adopting and amending section 205 of the Advisers Act, and the SEC, in adopting rule 205–1, put into place safeguards designed to ensure that investment advisers would not take advantage of advisory clients.

6. Applicants assert that the SEC required that performance fees be calculated based on the net asset value of the investment company's shares to prevent a situation where an adviser could earn a performance fee even though investment company shareholders did not derive any benefit from the adviser's performance after the deduction of fees and expenses.

7. Applicants state that, unlike traditional performance fee arrangements, GSAM would not receive the Performance Component of its fee unless its management of the GSAM Account has resulted in performance in excess of the Index performance plus a ''performance hurdle'' equal to the 0.30 percent base fee. Applicants assert that increasing the performance of the Index by the 0.30 percent hurdle would have an effect similar to deducting GSAM's fees.[4] Applicants therefore argue that the Portfolio's shareholders will have protections similar to those contemplated by the net asset value requirement of rule 205–1.

8. Applicants suggest that Congress' concern, in enacting the safeguards of section 205, came about because the vast majority of investment advisers exercised a high level of control over the structuring of the advisory relationship. Applicants state that the proposed fee, however, was negotiated actively at arm's length between the parties. Applicants state that GSAM has little, if any, influence over the overall management of the Trust or the Portfolio beyond stock selection. Management functions of the Trust and the Portfolio reside in the Trust's Board. The Trust is directly and fully responsible for supervising the Trust's service providers and monitoring expenses of each of the Trust's portfolios. The Trust's Board is responsible for allocating the assets of the several portfolios among the portfolio managers. Neither GSAM nor any of its affiliates sponsored or organized the Trust or serves as a distributor or principal underwriter of the Trust. Neither GSAM nor any of its affiliates owns any shares issued by the Trust. No officer, director or employee of GSAM, nor any of its affiliates, serves as an executive officer or director of the Trust. Neither GSAM nor any of is affiliates is an affiliated person of Hirtle Callaghan or any other person who consults or provides investment advice with respect to the Trust's advisory relationships (except to the extent that such affiliation may exist by reason of GSAM or any of its affiliates serving as investment adviser to the Trust).

9. Applicants argue that the proposed fee arrangement satisfies the purpose of rule 205–1 because it was negotiated at arms-length and the Trust does not need the protections afforded by calculating a performance fee based on net assets. Applicants argue that the proposed fee arrangement is therefore consistent with the underlying policies of section 205 and rule 205–1 and that the exemption would be consistent with the protection of investors.

Applicants' Conditions

1. If the base fee changes, the performance hurdle will be changed to match the base fee.

2. To the extent GSAM, or an affiliate of GSAM, relies on the requested order with respect to advisory arrangements with other investment companies that it advises, these arrangements will meet the following requirements: (i) The investment advisory fee will be negotiated between GSAM, or the applicable affiliate of GSAM, and the investment company or its primary investment adviser; (ii) the fee structure will contain a performance hurdle that is, at all times, no lower than the base fee; (iii) neither GSAM nor any of its affiliates will serve as distributor or sponsor of the investment company; (iv) no member of the board of the investment company will be affiliated with GSAM or its affiliates; (v) neither GSAM nor any of its affiliates will organize the investment company; and (vi) neither GSAM nor any of its affiliates will be an affiliated person of any primary adviser to the investment company or of any other person who consults or provides advice with respect to the investment company's advisory relationships (except to the extent that GSAM and/or its affiliates may be affiliated with another portfolio manager by virtue of the fact that GSAM or the affiliate serves as a portfolio manager to the investment company or to another investment company).

For the SEC, by the Division of Investment Management, under delegated authority.

Margaret H. McFarland,

Deputy Secretary.

[FR Doc. 99–16862 Filed 7–1–99; 8:45 am]

BILLING CODE 8010–01–M

[4] If the 0.30 percent fee changes, the performance hurdle also would be changed to match the fee.

SECURITIES AND EXCHANGE COMMISSION

[Release No. 35–27042]

Filings Under the Public Utility Holding Company Act of 1935, as Amended (''Act'')

June 25, 1999.

Notice is hereby given that the following filing(s) has/have been made with the Commission pursuant to provisions of the Act and rules promulgated under the Act. All interested persons are referred to the application(s) and/or declaration(s) for complete statements of the proposed transaction(s) summarized below. The application(s) and/or declaration(s) and any amendments is/are available for public inspection through the Commission's Office of Public Reference.

Interested persons wishing to comment or request a hearing on the application(s) and/or declaration(s) should submit their views in writing by July 20, 1999, to the Secretary, Securities and Exchange Commission, Washington, DC 20549, and serve a copy on the relevant applicant(s) and/or declarant(s) at the address(es) specified below. Proof of service (by affidavit or, in case of an attorney at law, by certificate) should be feild with the request. Any request for hearing should identify specifically the issues of fact or law that are disputed. A person who so requests will be notified of any hearing, if ordered, and will receive a copy of any notice or order issued in the matter. After July 20, 1999, the application(s) and/or declaration(s), as filed or as amended, may be granted and/or permitted to become effective.

Columbia Insurance Corporation, Ltd. (70–9371)

Columbia Insurance Corporation, Ltd. (''CICL''), a wholly owned captive insurance subsidiary of Columbia Energy Group (''Columbia''), a registered holding company, and Columbia, both located at 13880 Dulles Corner Lane, Herndon, Virginia 20171–4600, have filed an application-declaration under sections 6(a), 7, 9(a), 10, and 12(b) of the Act and rules 45 and 54 under the Act.

By order dated October 25, 1996 (HCAR No. 26596), Columbia was authorized to form and capitalize CICL to engage in the reinsurance of predictable losses under the automobile and general liability and ''all-risk'' coverage.

CICL and Columbia now propose: (1) To expand their reinsurance activities to

include all predictable risks [1] related to the business of the Columbia; (2) that Columbia establish one or more direct or indirect subsidiaries to engage in the proposed re-insurance activities; and (3) that Columbia provide additional support to CICL and the to-be-formed subsidiaries in the form of equity, guarantees, letters of credit or other credit support in an aggregate amount of up to $50 million at any one time outstanding.

CICL and Columbia state their proposal will be subject to certain safeguards. Specifically, CICL, and any subsidiaries to be formed to engage in the proposed reinsurance activities, propose to participate as reinsurers only: (1) Where a direct commercial insurer underwrites the risk; (2) for a permitted business activity engaged in by a member of the Columbia holding company system; (3) where captive reinsurance would be reasonably expected to save the Columbia member a portion of the risk premium it would otherwise have paid; and (4) where the captive reinsurer can obtain, as appropriate, excess or stop-loss coverage.

For the Commission, by the Division of Investment Management, under delegated authority.

Margaret H. McFarland,

Deputy Secretary.

[FR Doc. 99–16863 Filed 7–1–99; 8:45 am]

BILLING CODE 8010–01–M

[1] CICL states that it will retain only that portion of the risk assumed from the primary insurer, a direct commercial insurer, that is relatively predictable on a basis of claim frequency and severity. CICL proposes to reinsure the more volatile/less predictable portion of the risk with other commercial insurers.

SECURITIES AND EXCHANGE COMMISSION

[Release No. 34–41557; File No. SR–Amex–99–09]

Self-Regulatory Organizations; American Stock Exchange LLC; Order Granting Approval to Proposed Rule Change and Amendment No. 1 to the Proposed Rule Change Amending Amex Rule 901C To Allow Modified Equal-Dollar and Modified Capitalization Weighting Calculation Methodologies for Narrow-Based Index Options

June 24, 1999.

On March 1, 1999, the American Stock Exchange LLC (''Amex'' or ''Exchange'') filed with the Securities and Exchange Commission (''Commission'' or ''SEC'') a proposed rule change pursuant to Section 19(b)(1) of the Securities Exchange Act of 1934 (''Act'') [1] and Rule 19b–4 thereunder.[2] The filing was amended on March 12, 1999 to provide additional information on modified weighting methodologies.[3] The proposed rule change would amend Commentary .02 to Amex Rule 901C to add modified equal-dollar weighting and modified capitalization weighting as acceptable weighting calculation methodologies for the construction of narrow-based index options.[4] Notice of the proposed rule change, as amended, was published in the **Federal Register** on April 20, 1999.[5] The Commission did not receive any comment letters on the filing. This Order approves the proposed rule change.

I. Introduction and Background

The Exchange proposes to amend Amex Rule 901C to add modified equal-dollar weighting and modified capitalization weighting as acceptable weighting calculation methodologies for the construction of narrow-based index options. Commentary .02 to Amex Rule 901C permits the Exchange to list options on stock industry index groups if the index meets certain criteria. Presently, the criteria require the index to be calculated using the capitalization, price, or equal-dollar weighting methodologies. Several other indexes which use a modified capitalization weighting methodology, however, including the Inter@ctive Week Internet Index, the Nasdaq-100 Index, and the Amex Eurotop 100 Index, were individually approved by the Commission as indexes that may underlie index options.[6] The Amex Mexico Index and the Amex Networking Index, which use a modified equal-dollar weighting index calculation methodology, were also approved by the Commission as indexes that may underlie index options.[7]

II. Description of the Proposal

The Exchange proposes to include modified capitalization and modified equal-dollar weighting calculation methodologies in Commentary .02 to Amex Rule 901C. Increasingly, the Exchange receives requests to construct new indexes using the modified capitalization or modified equal-dollar weighting methodologies to enable the proposed indexes to meet the generic criteria for narrow-based indexes, to provide for the timely trading of options on newly proposed indexes, or similar reasons. The Exchange wishes to accommodate these requests, and proposes to add these methodologies to the existing narrow-based criteria set forth in Commentary .02 of Amex Rule 901C that permits the listing of options on stock index groups pursuant to Rule 19b–4(e) under the Act.[8] Use of these methodologies should allow the Exchange greater flexibility in developing indexes and facilitate the listing of options on stock industry index groups that more accurately reflect the industry represented by the index.

Modified Capitalization Weighting

To determine an index value using the capitalization weighting calculation methodology, the following calculation applies: Multiplying the primary exchange regular way last sale price of each component security by the number of shares outstanding; adding the products; and dividing the result by the current index divisor. The index value for a modified capitalization weighted index is calculated in a similar manner. However, instead of using the actual number of shares outstanding, an adjusted number of shares outstanding is used in the calculation (*i.e.*, multiplying the primary exchange regular way last sale price of each component security by the adjusted number of shares outstanding; adding the products; and then dividing the result by the current index divisor). The modified capitalization weighting methodology uses an adjusted number of shares outstanding to prevent components with relatively large market capitalizations from representing an inordinately large portion of an index's value. For example, inclusion of a large

[1] 15 U.S.C. 78s(b)(1).

[2] 17 CFR 240.19b–4.

[3] *See* Letter from Scott G. Van Hatten, Legal Counsel, Amex, to Nancy Sanow, Senior Special Counsel, Commission, dated March 11, 1999.

[4] The Exchange refers to narrow-based index options as options on a ''stock index industry group.'' A stock index industry group is defined in the Amex Rules as a group of stocks representing a particular industry or related industries. *See* Amex Rule 900C(b)(1).

[5] Securities Exchange Act Release No. 41276 (April 12, 1999) 64 FR 19393.

[6] Securities Exchange Act Release No. 41124 (March 1, 1999) 64 FR 11520 (March 9, 1999) (File No. SR–Amex–99–04) (Inter@ctive Internet Index); Securities Exchange Act Release No. 40642 (November 5, 1998) 63 FR 63759 (November 16, 1998) (File No. SR–CBOE–98–43) (Nasdaq-100 Index); Securities Exchange Act Release No. 30463 (March 11, 1992) 57 FR 9284 (March 17, 1992) (File Nos. SR–Amex–90–25 and SR–Amex–91–01) (Amex Eurotop 100 Index).

[7] Securities Exchange Act Release No. 34500 (August 8, 1994) 59 FR 41534 (August 12, 1994) (File No. SR–Amex–94–20) (Amex Mexico Index); Securities Exchange Act Release No. 37017 (March 22, 1996) 61 FR 14168 (March 29, 1996) (File No. SR–Amex–96–03) (Amex Networking Index).

[8] 17 CFR 240.19b–4(e)

capitalization company in an index along with a number of smaller capitalization companies may result in the larger capitalization company's representation in the index exceeding 25% of the index's value. Thus, options on these indexes could not be listed on the Amex. However, since use of the modified capitalization methodology permits a reduction in the large capitalization company's representation in the index to an amount less than 25% of the index's value, the listing criteria of Amex rule 901C, Commentary .02(a)(7) are satisfied.

Modified Equal-Dollar Weighting

Use of the equal-dollar weighting calculation methodology to determine an index value is accomplished by establishing an initial dollar representation (*e.g.*, $100,000); determining the number of shares of each component representing this amount; and then multiplying the primary exchange regular way last sale price of each component security by its predetermined fixed number of shares. The equal-dollar weighted methodology can be used to provide more equitable representation of each component in a particular index. Modified equal-dollar weighting methodology is useful when the capitalization of companies within an index varies widely, by permitting larger capitalized companies to represent a larger portion of an index's value.

In effect, the modified equal-dollar weighting methodology is the mirror image of the modified capitalization weighting methodology. While the modified capitalization weighting methodology prevents large capitalization companies from skewing an index, the modified equal-dollar weighting methodology guards against small capitalized companies from doing so. Determining an initial index value for modified equal-dollar weighted indexes uses two or more fixed dollar values for different groups of the index components instead of using the same fixed dollar value for each component. In this way, the modified equal-dollar weighted method allows for similar component stocks to be weighted similarly, while differentiating among dissimilar groups (*e.g.*, large capitalization stocks versus small capitalization stocks). For example, a ten stock index, calculated under this method, that has five components with capitalizations of approximately $1 billion (or $5 billion in aggregate) and five components with capitalizations of approximately $500 million (or $2.5 billion in aggregate), allows the larger capitalization components to account for twice the amount of the smaller capitalized components, rather than having each component account for 10% of the index (as would be the case in a pure equal-dollar weighted index). Thus, the modified structure can be used to provide a more accurate representation of the market capitalization composition of the underlying industry for which the index is designed to measure.

III. Discussion

Under the Act, self-regulatory organizations (''SROs'') like the Amex are assigned rulemaking and enforcement responsibilities to perform their role in regulating the securities industry for the protection of investors and other related purposes. This role has particular importance in the context of the listing of narrow-based stock index options under Rule 19b–4(e), since the Exchange is the only regulatory authority reviewing such securities before their trading begins. The Commission recently adopted new Rule 19b–4(e),[9] eliminating the requirement that an SRO file a proposal under Section 19(b)(3)(A)[10] to list and trade options on narrow-based indexes, provided that the SRO relying on Rule 19b–4(e) has generic listing criteria approved by the Commission and meets certain other requirements. With the approval of the proposed rule change, Amex will be permitted under Rule 19b–4(e) to introduce new options that are based on narrow-based stock indexes using modified capitalization or equal-dollar weightings, but without the Exchange having to file a proposal under Section 19(c)(3)(A) of the Act.

Pursuant to Section 19(b)(2) of the Act,[11] the Commission is required to approve an SRO's proposed rule change if the Commission determines that the proposal is consistent with the applicable statutory standards. The Commission finds that the proposal is consistent with the requirements of Section 6(b) of the Act[12] in general, and particularly furthers the objectives of Section 6(b)(5) of the Act,[13] in that it is designed to promote just and equitable principles of trade and further the protection of investors and the public interest by increasing flexibility in developing an index by allowing an index to more accurately reflect an underlying industry sector. This enhanced flexibility and accuracy should also foster cooperation and coordination with persons engaged in facilitating transactions in securities, and remove impediments to, and perfect the mechanisms of, a free and open market and a national market system. As represented by the Exchange, modifying the capitalization amounts or dollar values of the securities underlying an index can prevent an individual stock from inappropriately skewing the performance of an entire index. The Commission therefore believes that market accuracy and transparency should be correspondingly enhanced by use of the modified capitalization and modified equal-dollar weighting methods, and approves them for use in the context of Commentary .02 to Amex Rule 901C concerning eligibility criteria for index components of a narrow-based stock index.

The Commission notes that the Exchange has represented that it will review the component weighings of indexes employing the modified capitalization weighting methodology quarterly, and if necessary, adjust them to ensure that the index continues to meet the weighting guidelines. In addition, the Exchange has further represented that adjustments will be made on an intra-quarterly basis, as necessary, to reflect corporate actions, share issuances and repurchases, and other events of significance.

With regard to the use of the modified equal-dollar weighting methodology, the Commission notes that the Exchange has represented that the number of shares of each component security will be examined and, if necessary, adjusted quarterly, so that the members of each weighting group are set to the appropriate index weight to ensure compliance with the criteria. The number of shares of each component stock in the index portfolio will remain fixed between quarterly reviews, except in the event of corporate actions such as the payment of a dividend other than an ordinary cash dividend, stock distribution, reorganization, recapitalization, or similar event with respect to the component stocks. In the event of a merger or consolidation of an issuer of a component stock, if the stock remains in the index, the number of shares of that security in the portfolio may be adjusted to the nearest whole share, to maintain the component's relative weight in the index at the level immediately prior to the corporate action. In the event of a stock addition or replacement, the average dollar value of the remaining components in the same weighting group will be

[9] *See* Securities Exchange Act Release No. 40761 (December 8, 1998) 63 FR 70952 (December 22, 1998) (amending Rule 19b–4 with respect to rule filing requirements for SROs listing and trading a new derivative securities product).

[10] 15. U.S.C. 78s(b)(3)(A).

[11] 15 U.S.C. 78s(b)(2).

[12] 15 U.S.C. 78f(b).

[13] 15 U.S.C. 78f(b)(5).

calculated, and that amount invested in the stock of the new component to the nearest whole share. In all cases, the divisor will be adjusted, if necessary, to ensure index continuity.

The Commission further notes that the Exchange has represented that the terms of any modified capitalization or modified equal-dollar weighting calculation methodology will be clearly defined, and will consist of objective standards that permits any newly developed narrow-based index initially to meet, and subsequently, to continue to be maintained, in accordance with the generic criteria set forth in Commentary .02 to Amex Rule 901C. In addition, the Exchange has represented that these terms will be discussed in marketing materials describing the index and in the Information Circulars the Exchange will distribute to members upon the launch of new index options.

IV. Conclusion

The Commission finds that the proposed rule change is consistent with the Act, and in particular, with Section 6(b)(5).

It is therefore ordered, pursuant to Section 19(b)(2) of the Act,[14] that the proposal, SR–Amex 99–09, be and hereby is approved.[15]

For the Commission, by the Division of Market Regulations, pursuant to delegated authority.[16]

Margaret H. McFarland,

Deputy Secretary.

[FR Doc. 99–16866 Filed 7–1–99; 8:45 am]

BILLING CODE 8010–01–M

SECURITIES AND EXCHANGE COMMISSION

[Release No. 34–41562; File No. SR–Amex–99–22]

Self-Regulatory Organizations; Notice of Filing and Immediate Effectiveness of a Proposed Rule Change by the American Stock Exchange LLC Relating to Rule 1006

June 25, 1999.

Pursuant to Section 19(b)(1) of the Securities Exchange Act of 1934 (''Act''),[1] notice is hereby given that on June 22, 1999, the American Stock Exchange LLC (''Amex'' or ''Exchange'') filed with the Securities and Exchange Commission the proposed rule change as described in Items I, II, and III below, which Items have been prepared by the self-regulatory organization. The Commission is publishing this notice to solicit comments on the proposed rule change from interested persons.

I. Self-Regulatory Organization's Statement of the Terms of Substance of the Proposed Rule Change

The Exchange proposes to amend Rule 1006 which governs disclaimers of liability relating to the Nasdaq-100 Index.® Below is the text of the proposed rule change. Proposed new language is italicized; proposed deletions are in [brackets].

Nasdaq-100 Index®

Rule 1006. The Nasdaq Stock Market, Inc. (''Nasdaq'') has licensed the use of the Nasdaq-100 Index® for certain purposes in connection with trading in a particular series of Portfolio Depositary Receipts on the Exchange. Nasdaq *and its affiliates* [does] *do* not guarantee the accuracy and/or completeness of the Nasdaq-100 Index® or any data included therein. Nasdaq [and], the Exchange *and their affiliates* make no warranty, express or implied, as to results to be obtained by any person or entity from the use of the Nasdaq-100 Index or any data included therein in connection with the rights licensed or for any other use. Nasdaq [and], the Exchange *and their affiliates* make no express or implied warranties, and disclaim all warranties of merchantability or fitness for a particular purpose with respect to the Nasdaq-100 Index or any data included therein. Without limiting any of the foregoing, in no event shall Nasdaq [and], the Exchange *and their affiliates* have any liability for any lost profits or special, punitive, incidental, indirect, or consequential damages, even if notified of the possibility of such damages. In addition, Nasdaq [and], the Exchange *and their affiliates* shall have no liability for any damages, claims, losses or expenses caused by any errors or delays in calculating or disseminating the Nasdaq-100 Index.

II. Self-Regulatory Organization's Statement of the Purpose of, and Statutory Basis for, the Proposed Rule Change

In its filing with the Commission, the self-regulatory organization included statements concerning the purpose of and basis for the proposed rule change and discussed any comments it received on the proposed rule change. The text of these statements may be examined at the places specified in Item IV below. The self-regulatory organization has prepared summaries, set forth in sections A, B, and C below, of the most significant aspects of such statements.

A. Self-Regulatory Organization's Statement of the Purpose of, and the Statutory Basis for, the Proposed Rule Change

1. Purpose

On February 26, 1999,[2] the Commission approved the listing and trading under Amex Rules 1000 *et seq.* of Nasdaq-100 Shares,℠ units of beneficial interest in the Nasdaq-100 Index® Trust, Series 1, a unit investment trust based on the Nasdaq-100 Index.® The Commission also approved in the Nasdaq-100 Shares Order Amex Rule 1006, which provides for disclaimers of liability with respect to the Nasdaq-100® by the Nasdaq and the Exchange in connection with the trading of Nasdaq-100 Shares. This provision is similar to other Exchange rules relating to disclaimers of liability with respect to Portfolio Depositary Receipts (*e.g.,* Amex Rule 1004 (S&P 500 Index) and Amex Rule 1005 (Dow Jones Indexes) as well as index options (*e.g.,* Amex Rule 902C). The Exchange is amending Amex Rule 1006 to state that the disclaimers of liability, specified in the rule, extend to affiliates of Nasdaq and the Exchange. The Exchange believes that such an amendment is appropriate to clarify and make explicit that the disclaimers of liability specified in Amex Rule 1006 also apply to affiliates of Nasdaq and Amex, which include the National Association of Securities Dealers, Inc. and NASD Regulation, Inc.

2. Statutory Basis

The proposed rule change is consistent with Section 6(b) of the Act[3] in general and furthers the objectives of Section 6(b)(5)[4] in particular in that it is designed to prevent fraudulent and manipulative acts and practices, to promote just and equitable principles of trade, to foster cooperation and coordination with persons engaged in facilitating transactions in securities, and to remove impediments to and perfect the mechanism of a free and open market and a national market system.

B. Self-Regulatory Organization's Statement on Burden on Competition

The Exchange does not believe that the proposed rule change will impose

---

[14] 15 U.S.C. 78s(b)(2).

[15] In approving the proposal, the Commission has considered the rule's impact on efficiency, competition, and capital formation. 15 U.S.C. 78c(f).

[16] 17 CFR 200.30–3(a)(12).

[1] 15 U.S.C. 78s(b)(1).

[2] Securities Exchange Act Release No. 41119 (February 26, 1999), 64 FR 11510 (March 9, 1999) (''Nasdaq-100 Shares Order'').

[3] 15 U.S.C. 78f(b).

[4] 15 U.S.C. 78f(b)(5).

any inappropriate burden on competition.

C. Self-Regulatory Organization's Statement on Comments on the Proposed Rule Change Received From Members, Participants or Others

No written comments were either solicited or received.

III. Date of Effectiveness of the Proposed Rule Change and Timing for Commission Action

Because the foregoing proposed rule change: (1) Does not significantly affect the protection of investors or the public interest; (2) does not impose any significant burden on competition; (3) does not become operative for 30 days from June 22, 1999, the date on which it is filed, and because the Exchange provided the Commission with written notice of its intent to file the proposed rule change at least five business days prior to the filing date, it has become effective pursuant to Section 19(b)(3)(A) of the Act and Rule 19b–4(f)(6) thereunder.[5] At any time within 60 days of the filing of the proposed rule change, the Commission may summarily abrogate such rule change if it appears to the Commission that such action is necessary or appropriate in the public interest, for the protection of investors, or otherwise in the furtherance of the purposes of the Act.[6]

IV. Solicitation of Comments

Interested persons are invited to submit written data, views and arguments concerning the foregoing, including whether the proposed rule change is consistent with the Act. Persons making written submissions should file six copies thereof with the Secretary, Securities and Exchange Commission, 450 Fifth Street, NW., Washington, DC 20549–0609. Copies of the submission, all subsequent amendments, all written statements with respect to the proposed rule change that are filed with the Commission, and all written communications relating to the proposed rule change between the Commission and any person, other than those that may be withheld from the public in accordance with the provisions of 5 U.S.C. 552, will be available for inspection and copying in the Commission's Public Room. Copies of such filing will also be available for inspection and copying at the principal office of the Amex. All submissions should refer to the File No. SR–Amex–99–22 and should be submitted by July 23, 1999.

For the Commission by the Division of Market Regulation, pursuant to delegated authority.[7]

Margaret H. McFarland,

Deputy Secretary.

[FR Doc. 99–16869 Filed 7–1–99; 8:45 am]

BILLING CODE 8010–01–M

[5] 17 CFR 240.19b–4(f)(6) (1999).

[6] 15 U.S.C. 78s(b)(3)(C).

[7] 17 CFR 200.30–3(a)(12).

SECURITIES AND EXCHANGE COMMISSION

[Release No. 34–41563; File Nos. SR–BSE–97–07 and SR–BSE–99–09]

Self-Regulatory Organizations; Notice of Withdrawal of Proposed Rule Change and Amendment No. 1 Thereto by the Boston Stock Exchange, Inc. Relating to Its Specialist Performance Evaluation Program and Notice of Filing and Order Granting Accelerated Approval of Proposed Rule Change by the Boston Stock Exchange, Inc. Relating to Its Specialist Performance Evaluation Program

June 25, 1999.

On October 8, 1998, the Boston Stock Exchange, Inc. (''BSE'' or ''Exchange'') filed with the Securities and Exchange Commission (''Commission'') a proposed rule change (SR–BSE–98–07), pursuant to Section 19(b)(1) of the Securities Exchange Act of 1934 (''Act''),[1] and Rule 19b–4 thereunder,[2] to amend the depth measure calculations in its Specialist Performance Evaluation Program (''SPEP'') pilot program. The Exchange submitted Amendment No. 1 to its proposed rule change (SR–BSE–98–07) on November 13, 1998.[3] Notice of the proposed rule change, as amended, was published on December 11, 1998, in the **Federal Register**, to solicit comment from interested persons.[4] On December 17, 1998, the Exchange submitted Amendment No. 2 to its proposal.[5] On December 28, 1998, the Commission noticed and granted accelerated approval of Amendment No. 2.[6] On June 10, 1999, the Exchange withdrew those portions of its proposed rule change relating to permanent approval of the SPEP pilot program and to the proposed changes to its depth measures.[7]

Pursuant to Section 19(b)(1) of the Act,[8] and Rule 19b–4 thereunder,[9] notice is hereby given that on June 10, 1999, the Exchange filed with the Commission the proposed rule change (SR–BSE–99–09), which requests that the Commission approve an extension of the SPEP pilot until March 31, 2000. The proposed rule change is described in Items I and II below, which Items have been prepared by the Exchange. The Commission is publishing this notice to solicit comments on the proposed rule change from interested persons and to grant accelerated approval to this rule proposal.

I. Self-Regulatory Organization Statement of the Terms of Substance of the Proposed Rule Change

The Exchange proposes to extend its SPEP pilot program until March 31, 2000.[10]

II. Self-Regulatory Organization's Statement of the Purpose of, and Statutory Basis for, the Proposed Rule Change

In its filing with the Commission, the Exchange included statements concerning the purpose of, and basis for, the proposed rule change and discussed any comments it received on the proposed rule change. The text of these statements may be examined at the places specified in Item III below. The Exchange has prepared summaries, set forth in Sections A, B, and C below, of the most significant aspects of such statements.

A. Self-Regulatory Organization's Statement of the Purpose of, and Statutory Basis for, the Proposed Rule Change

1. Purpose

The Exchange regularly evaluates the performance of its specialists under the SPEP pilot program. Under the SPEP

[1] 15 U.S.C. 78s(b)(1).

[2] 17 CFR 240.19b–4.

[3] In Amendment No. 1, the Exchange requested permanent approval of the SPEP pilot program and deleted its request for accelerated approval and retroactive implementation of the proposed rule change. *See* Rule 19b–4 filing, SR–BSE–98–07, dated November 6, 1998 (''Amendment No. 1'').

[4] Securities Exchange Act Release No. 40746 (December 3, 1998), 63 FR 68490 (December 11, 1998).

[5] In Amendment No. 2, the Exchange (1) requested an extension of the SPEP pilot program for a six-month period ending on June 30, 1999, or until the Commission approves the Exchange's proposal to make it permanent, whichever occurred first, and (2) made a technical change to its rule. *See* Letter From Karen A. Aluise, Vice President, Exchange, to Richard Strasser, Assistant Director, Division of Market Regulation (''Division''), Commission, dated December 14, 1998 (''Amendment No. 2'')

[6] Securities Exchange Act Release No. 40844 (December 28, 1998), 64 FR 1041 (January 7, 1999).

[7] *See* Letter from Karen A. Aluise, Vice President, Exchange, to Richard Strasser, Assistant Director, Division, Commission, dated June 9, 1999.

[8] 15 U.S.C. 78s(b)(1).

[9] 17 CFR 240.19b–4.

[10] Telephone conversation between Karen A. Aluise, Vice President, Exchange, and Terri Evans, Attorney, Division, Commission, on June 17, 1999.

pilot, specialists are evaluated based on objective measures, such as turnaround time, price improvements, depth and added depth. Generally, any specialist who receives a deficient score in one or more objective measures may be required to attend a meeting with the Performance Improvement Action Committee or the Market Performance Committee.[11]

The current pilot program will expire on June 30, 1999. The Exchange seeks to extend its SPEP pilot until March 31, 2000, while the Exchange considers revising its depth measure calculations.[12]

2. Statutory Basis

The statutory basis for the proposed rule change is Section 6(b)(5) of the Act,[13] in that it is designed to promote just and equitable principles of trade; to foster cooperation and coordination with persons engaged in regulating, clearing, settling, processing information with respect to, and facilitating transactions in securities; to remove impediments to and perfect the mechanism of a free and open market and a national market system; and, in general, to protect investors and the public interest; and is not designed to permit unfair discrimination between customers, issuers, brokers and dealers.

B. Self-Regulatory Organization's Statement on Burden of Competition

The exchange does not believe that the proposed rule change will impose any burden on competition that is not necessary or appropriate in furtherance of the purposes of the Act.

C. Self-Regulatory Organization's Statement on Comments on the Proposed Rule Change Received From Members, Participants or Others

The Exchange has neither solicited nor received written comments on the proposed rule change.

III. Solicitation of Comments

Interested persons are invited to submit written data, views and arguments concerning the foregoing, including whether the proposed rule change is consistent with the Act. Persons making written submissions should file six copies thereof with the Secretary, Securities and Exchange Commission, 450 Fifth Street, NW, Washington, DC 20549–0609. Copies of the submission, all subsequent amendments, all written statements with respect to the proposed rule change that are filed with the Commission, and all written communications relating to the proposed rule change between the Commission and any person, other than those that may be withheld from the public in accordance with the provisions of 5 U.S.C. 552, will be available for inspection and copying in the Commission's Public Reference Room in Washington, DC. Copies of such filing will also be available for inspection and copying at the principal office of the Exchange. All submissions should refer to File No. SR–BSE–99–09 and should be submitted by July 23, 1999.

IV. Commission's Findings and Order Granting Accelerated Approval of Proposed Rule Change

The Commission finds that the BSE's proposal to extend the SPEP pilot program until March 31, 2000, is consistent with the requirements of the Act and the rules and regulation thereunder. Specifically, the Commission finds that the amendment is consistent with Section 6(b)(5) of the Act,[14] which requires that the rules of the Exchange be designed to promote just and equitable principles of trade, to remove impediments to and perfect the mechanism of a free and open market and a national market system, and, in general to protect investors and the public interest. The Commission believes that the proposed nine-month extension of the pilot program should allow the Exchange to continue to assess specialist performance while allowing the Exchange adequate time to consider amending its two depth measure calculations.

The Commission finds good cause for granting the Exchanges' request for a nine-month extension of the SPEP pilot prior to the thirtieth day after the date of publication of notice of filing thereof in the **Federal Register**. Among the obligations imposed upon specialists by the Exchange, and by the Act and the rules promulgated thereunder, is the maintenance of fair and orderly markets in their securities. To ensure that specialists fulfill these obligations, it is important that the Exchange be able to evaluate specialist performance. The BSE's SPEP pilot assists the Exchange in conducting its evaluation. Therefore, the Commission believes good cause exists to approve the extension of the pilot program until March 31, 2000, on an accelerated basis. Accordingly, the Commission believes that granting accelerated approval of the requested extension is appropriate and consistent with Sections 6(b)(5) and 19(b)(2) of the Act.[15]

It is therefore ordered, pursuant to Section 19(b)(2) of the Act,[16] that the proposed rule change (SR–BSE–99–09) is hereby approved on an accelerated basis until March 31, 2000.[17]

For the Commission, by the Division of Market Regulation, pursuant to delegated authority.[18]

Margaret H. McFarland,

Deputy Secretary.

[FR Doc. 99–16868 Filed 7–1–99; 8:45 am]

BILLING CODE 8010–01–M

[11] *Id.*

[12] The Exchange plans on seeking permanent approval of the SPEP pilot at the same time that it submits its revised depth measure calculations. *Id.*

[13] 15 U.S.C. 78f(b)(5).

[14] 15 U.S.C. 78f(b)(5).

[15] 15 U.S.C. 78f(b)(5) and 78s(b)(2).

[16] 15 U.S.C. 78s(b)(2).

[17] In approving the proposed rule change, the Commission has considered its impact on efficiency, competition, and capital formation. 15 U.S.C. 78c(f).

[18] 17 CFR 200.30–3(a)(12).

SECURITIES AND EXCHANGE COMMISSION

[Release No. 34–41560; File No. SR–NASD–98–96]

Self-Regulatory Organizations; Order Granting Approval to Proposed Rule Change by the National Association of Securities Dealers, Inc. Relating to Amendments to Forms U–4 and U–5

June 25, 1999.

I. Introduction

On December 18, 1998, the National Association of Securities Dealers, Inc. (''NASD'' or ''Association''), through its wholly owned subsidiary NASD Regulation, Inc. (''NASD Regulation'' or ''NASDR''), filed with the Securities and Exchange Commission (''SEC'' or ''Commission'') a proposed rule change pursuant to Section 19(b)(1) of the Securities Exchange Act of 1934 (''Act''),[1] and Rule 19b–4 thereunder.[2] In its proposal, NASD Regulation seeks to amend disclosure question on Form U–4, The Uniform Application for Securities Industry Registration or Transfer, and Form U–5, The Uniform Termination Notice for Securities Industry Registration, (collectively ''Proposed Forms'') and to implement the World Wide Web-based Central Registration Depository (''Web CRD''). Notice of the proposal, as amended by Amendment No. 1, Amendment No. 2, and Amendment No. 3, was published in the **Federal Register** on April 30, 1999 (''Notice'').[3]

[1] 15 U.S.C. 78s(b)(1).

[2] 17 CFR 240.19b–4.

[3] *See* Securities Exchange Act Release No. 41326 (April 22, 1999), 64 FR 23366 (File No. SR–NASD–98–96).

On April 28, 1999, NASDR filed Amendment No. 4 to the proposed rule change (''Amendment No. 4''). Notice of Amendment No. 4 was published in the **Federal Register** on May 13, 1999.[4] Amendment No. 4 clarifies the processing of Forms U–4 and U–5 during and after the period Web CRD becomes effective. On June 8, 1999, NASDR submitted Amendment No. 5 to the proposal. Amendment No. 5 makes technical, non-substantive, changes to the proposal.[5] On June 18, 1999, NASDR filed Amendment No. 6 to the proposal. Amendment No. 6 also makes technical, non-substantive, changes to the proposal.[6] The Commission received no comment letters on the filing. This order approves the proposal, as amended.

II. Description of the Proposal

As part of NASDR's efforts to modernize the Central Registration Depository (''CRD''), NASDR seeks to streamline the registration and termination process for individuals. NASDR proposes to amend Forms U–4 and U–5 so that these forms can be electronically submitted through the World Wide Web. Under the NASDR's proposal, an individual seeking registration will be required to fill out and submit an electronic Form U–4, which will be available on NASDR's website (''Proposed Form U–4'').[7] Further, when an associated person terminates his association with a broker-dealer, the broker-dealer will be required to fill out and submit an electronic Form U–5, which will also be available on the NASDR's website (''Proposed Form U–5'')[8] In addition, the NASD seeks to amend certain disclosure questions on Forms U–4 and U–5.

Background

The NASD originally planned to implement a redesigned CRD in 1996. At that time, the NASD proposed a network-based system in which individuals and firms would electronically submit Forms U–4 and U–5 directly to the CRD. To accomplish this change, the NASD redesigned Forms U–4 and U–5. The Commission approved these forms in 1996 (''1996 Forms)''.[9]

However, following a technological reassessment in 1997, the NASD decided to abandon the network-based system. Instead, the NASD decided to create a web-based system where individuals and firms could electronically submit Forms U–4 and U–5 through the NASDR's World Wide Website. Because the network-based system was abandoned, the 1996 Forms could not be used. As a result, the NASD received Commission approval for Interim Forms U–4 and U–5 while Web CRD was being developed (''Interim Forms'').[10] The Interim Forms, which are submitted on paper, included all of the substantive changes to the disclosure questions and some of the changes to instructions that were approved in the 1996 Forms. The Interim Forms are currently in effect.

Changes to the 1996 Forms

To accomplish the transition to Web CRD, the NASD now proposes certain formatting and technical changes to the 1996 Forms, which were the original proposed electronic forms. First, the Disclosure Reporting Pages (''DRPs'') were reformatted. Due to the complexity of the data structure of the 1996 DRPs, NASDR felt that Web CRD would not be able to efficiently process the 1996 Forms without revisions.[11]

Second, the ''other business activities'' DRP on the 1996 Form U–4 was replaced with a separate attachment sheet, which also can be used to provide additional information about residential, employment or personal history. The other business activity section of Question 20B on the 1996 Form U–4 renumbered as Question 21. (All subsequent questions are likewise renumbered.) Correspondingly, the instructions to Question 21 on the Proposed Form U–4 list the types of information that must be provided on the attachment sheet, and request the information that would be reportable on the ''other business activities'' DRP.

Third, Sections 11 and 12 on the 1996 Form U–4 and Section 11 on the 1996 Form U–5 have been reformatted to ensure more accurate selections of registration categories. The Proposed Forms were reformatted to reduce erroneous requests for registrations that are not available for a particular self-regulatory organization (''SRO''). In addition, the instructions on the Proposed Forms clarify that CRD does not process Investment Adviser Representative and Agent of the Issuer registrations, even though the paper versions of the Proposed Forms contain boxes for such registrations. When an individual views the electronic version of the Proposed Forms on the Web CRD system, the boxes for these registrations will be shaded and the individual will not be allowed to select these options. The boxes for these registrations are included on the paper versions of the Proposed Forms solely for the convenience of states that wish to use the paper Proposed Forms for these registrations.

Fourth, the General Instructions on the Proposed Forms were changed. The General Instructions regarding the submission of documents on the 1996 Forms provide that documents are not required to be submitted, but that the individual may submit them because documents may be requested as part of the review process. The Proposed Forms amend this instruction slightly to conform to the current practice of the states and SROs by stating that, although documents are not generally required to be filed with the Forms, it may be necessary to provide them to clarify or support responses on the Forms.

Finally, the proposed Forms retain the definitions of ''investigation'' and ''sales practice violations'' that were adopted in the Interim Forms, with slight changes to function. The NASD believes these definitions are more precise than the corresponding definitions used in the 1996 Forms and generally have worked will in practice.

The Proposed Forms also contain DRP ''pick lists'' that will appear for users filing the forms electronically. The pick lists, which only appear in the DRP portions of the Proposed Forms, provide choices that an individual or firm must select when answering a question. For example, on the Proposed U–5 Customer Complaint DRP, when a firm clicks on the field for ''Litigation Disposition,'' the following choices will appear on the screen: Decision for

[4] *See* Securities Exchange Act Release No. 41371 (May 5, 1999), 64 FR 25945 (File No. SR–NASD–98–96).

[5] *See* letter from Alden S. Adkins, Senior Vice President and General Counsel, NASD Regulation, to Katherine A. England, Assistant Director, Division of Market Regulation, Commission, dated June 7, 1999. In Amendment No. 5, NASD Regulation changed the abbreviations of the American Stock Exchange from ''ASE'' to ''AMEX'' and the Pacific Stock Exchange from ''PSE'' to ''PCX'' on the Proposed Forms U–4 and U–5. Because this is a technical change, it does not need to be published for comment.

[6] *See* letter from John M. Ramsay, Vice President and Deputy General Counsel, NASD Regulation, to Katherine A. England, Assistant Director, Division of Market Regulation, Commission, dated June 18, 1999. In Amendment No. 6, NASDR further clarifies the processing of Forms U–4 and U–5 during the period Web CRD becomes effective. Because this is a technical change, it does not need to be published for comment.

[7] The address for NASDR's website is http://www.nasdr.com.

[8] *Id.*

[9] *See* Securities Exchange Act Release No. 37407 (July 5, 1996), 61 FR 36595 (July 11, 1996) (File No. SR–NASD–96–19).

[10] *See* Securities Exchange Act Release No. 39322 (Nov. 13, 1997), 62 FR 62391 (Nov. 21, 1997) (File No. SR–NASD–97–98).

[11] For a detailed history of the development of Web CRD, Forms U–4 and U–5, and the procedures associated with filing the forms, refer to the Notice and Amendment No. 4. *See supra* Notes 3, 4.

Applicant , Decision for Customer, Denied, Dismissed, Judgment (other than monetary), Monetary Judgment to Applicant, Monetary Judgment to Customer, No Action, Other, Settled, Withdrawn. Like every pick list on the Proposed Forms, the firm submitting the electronic DRP will be limited to one of the choices on the list. In all pick lists (except states of residence and types of judgments/liens), a firm or individual may select ''Other'' if none of the choices presented in the pick list is applicable.

Changes to the Disclosure Questions

In addition, four disclosure questions from the 1996 Forms are amended on the Proposed Forms. These substantive amendments involve: (1) An expansion of the Form U–4 question eliciting information on settled customer complaints to include those oral complaints involving sales practice allegations that are settled for $10,000 or more;[12] (2) a modification of the Form U–5 question eliciting information on customer complaints to make that reporting requirement consistent with the parallel question on the Form U–4 (effectively eliminating the reporting requirement for and permitting the archiving of customer complaints that are over 24 months old and are not otherwise reportable);[13] and (3) an expansion of the reporting requirement on the Form U–5 to include criminal or regulatory actions initiated on the basis of events that occurred while and individual was employed by the firm, even if the actions were initiated after the individual had been terminated.[14]

Transition Period and Afterward

From July 31 to August 15, 1999, the CRD system will not process Forms U–4 and U–5. This two week period (termed the ''System Transition Period'') is needed to complete the final data conversions from the current CRD system to the Web CRD system.[15] NASDR requests that August 1, 1999 be the effective date for the Proposed Forms.

Based on this effective date, NASDR *WILL NOT* accept *paper* Interim Forms U–4 and U–5 after July 29, 1999. However, firms that use the Firm Access Query System and firms that use the Electronic Filing Transfer system will be able to electronically submit pages one and two a forms U–4 and U–5 to NASDR through July 30, 1999.[16] In addition, NASDR *WILL NOT* accept Proposed Form U–4 until August 16, 1999, which is when the CRD system will again be operational. In practice, this means that NASDR *WILL NOT* accept new applications for registration from July 30 to August 16, 1999.

However, during the System Transition Period, NASDR *WILL* accept paper versions of the Proposed From U–5 provided these forms are submitted to report full termination (*i.e.,* a termination of an individual's registration with all SROs and jurisdictions). Additionally, during this period, NASDR will review all paper Proposed Forms U–5 reporting full termination and will provide notice to the appropriate regulators/jurisdictions if these forms contain disclosure information.

In addition, NASDR has developed a plan, which is based on the current Temporary Agent Transfer (''TAT'') program, to allow registered representatives to transfer their registrations during the System Transition Period. During this period, NASDR will accept Transition TAT Requests for registered representatives who have left their previous employer within the last seven days and who have no reportable disclosure information. NASDR will only accept Transition TAT Requests for participating jurisdictions.[17]

After August 1, 1999 and continuing after the System Transition Period, NASDR also *WILL* accept paper versions of Part II of the ''Internal Review DRP'' in the Proposed Form U–5. The 1996 Form U–5 ''Internal Review DRP'' contains a Part II that allows a registered representative who has been terminated to provide a summary of the circumstances relating to an internal review disclosure submitted by the individual's former employer on the Form U–5. Once the Proposed Forms become effective, NASDR *WILL* accept paper submissions of this Part II information by a terminated registered representative and NASDR staff will enter the information on to the Web CRD system on behalf of the terminated registered representative.

After the System Transition Period (*i.e.,* August 16, 1999), when a firm amends a Form U–4 filing on Web CRD for the first time for an individual with disclosure information, a blank Page 3 of the Proposed Form U–4 will appear on the screen. A firm then will be required to fill out the entire Page 3 to reflect all currently reportable disclosure information, some or all of which may already have been reported to CRD.[18] Thereafter, a member will be able to retrieve the most recently filed electronic Page 3 of the Form U–4 and edit for submission, rather than filling out the blank Page 3 for each subsequent filing.

Beginning August 16, 1999, All Forms U–4 and U–5 Must Be Submitted Electronically

II. Discussion

The Commission finds that the proposal is consistent with the requirements of Section 15A[19] of the Act[20] and the rules and regulations thereunder that govern the NASD.[21] In particular, the Commission finds that the proposed rule change is consistent with Section 15A(b)(6)[22] which requires, among other things, that the rules of an association be designed to foster cooperation and coordination with persons engaged in regulating, clearing, settling, processing information with respect to, and facilitating transactions in securities, and, in general, to protect investors and the public interest; and are not designed to permit unfair discrimination among customers, issuers, brokers, or dealers.

The Commission has determined to approve the Association's proposal implementing Web CRD and amending certain disclosure questions on Forms U–4 and U–5. The Commission believes that Web CRD will streamline the registration and termination process for individuals and firms. Under the NASDR's proposal, an individual

[12] Question 22i(2) on the Proposed U–4,

[13] Question 17 on the Proposed U–5.

[14] Questions 14 and 15 on the Proposed U–5.

[15] NASDR's Public Disclosure Program, which provides disciplinary and other information about NASD members and their associated persons, will continue to be available to the public and regulators during the System Transition Period. Regulators also will continue to have query access (*i.e.,* read only access) to the current CRD system during the System Transition Period.

[16] *See supra* Note 6.

[17] *See CRD/PD Bulletin*, June 1999, Volume 7, No. 2. This Bulletin contains detailed information about the transition to Web CRD.

[18] In Amendment No. 4, the NASDR stated that firms were already subject to this requirement. The Commission notes that under the Interim Form U–4, forms did *not* need to file a new Page 3 every time a firm amended an individual's U–4. While the Interim U–4 was effective, the instructions stated, ''Information contained on Form U–4 must be kept current. As changes occur, the CRD should be updated by an amendment filing. Amendments are accomplished by filing the appropriate page(s) containing only the information in need of revision.'' *See* instructions under the section titled. ''How to Use Form U–4.''

[19] 15 U.S.C. 78*o*–3.

[20] Pursuant to Section 3(f) of the Act, the Commission has considered the proposed rule's impact on efficiency, competition, and capital formation. The Commission notes that the forms provide SROs and states with a centralized, cost-effective, and efficient means of maintaining information on associated persons. Moreover, the impact on competition is negligible because all SROs currently use a version of Forms U–4 and U–5. 15 U.S.C. 78c(f).

[21] 15 U.S.C. 78s(b).

[22] 15 U.S.C. 78*o*–3(b)(6).

seeking registration will be required to fill out an electronic Form U–4, which will be available on NASDR's website, and submit it electronically. Further, when an associated person ends his association with a broker-dealer, the broker-dealer will be required to fill out an electronic Form U–5, which will also be available on the NASDR's website, and submit it electronically.

Further, the Commission believes that Web CRD will expedite the registration and termination process for individuals and firms. Under the proposal, firms and individuals will no longer rely on the mail system to transmit the forms to NASDR. Now, individuals and firms will electronically submit Forms U–4 and U–5 through the World Wide Web, which means NASDR should receive the forms more quickly. The Commission also believes that investors will benefit from the expedited registration and termination process because the faster NASDR receives the forms, the faster information on the forms can be disclosed to investors through the NASD's Public Disclosure Program (''PDP'').

In addition, based on demonstrations of Web CRD, the Commission believes that the CRD system will be easier for regulators and SROs to use. For example, Form U–4 disclosure information will be in a format that is easier to understand than what is currently displayed in CRD. With Web CRD, regulators and SROs will be able to quickly access relevant information in an easy-to-read format.

Additionally, the Commission believes that the amended disclosure questions, coupled with the NASD's PDP, will provide the public with more information about an associated person's disciplinary history. The Commission believes that this information will help investors determine whether to conduct or continue to conduct business with particular associated persons. The Commission notes that disclosure of this additional information may serve as a deterrent to fraudulent activity as well.

Lastly, the Commission notes that the pick lists, even with the ''Other'' choice, will standardize individuals' and firms' responses to DRP questions. Previously, when an individual or firm responded to DRP questions on the Interim Forms U–4 and U–5, the individual or firm had the ability to write whatever he thought was appropriate. Now, when responding to a DRP question, an individual or firm is limited to the choices provided in the pick lists. Because future changes to the lists might affect individuals and firms' ability to respond to DRP questions, the Commission expects NASDR to file substantive changes to the pick lists.

It is therefore ordered, pursuant to Section 19(b)(2) of the Act,[23] that the proposed rule change (SR–NASD–98–96), as amended, is hereby approved.

For the Commission, by the Division of Market Regulation, pursuant to delegated authority.[24]

Margaret H. McFarland,

Deputy Secretary.

[FR Doc. 99–16865 Filed 7–1–99; 8:45 am]

BILLING CODE 8010–01–M

[23] 15 U.S.C. 78s(b)(2).

[24] 17 CFR 200.30–3(a)(12).

SECURITIES AND EXCHANGE COMMISSION

[Release No. 34–41561; File No. SR–OCC–99–02]

Self-Regulatory Organizations; The Options Clearing Corporation; Notice of Filing and Order Granting Accelerated Approval of a Proposed Rule Change Relating to the Use of Non-Equity Securities Options for Determining Margin and Clearing Fund Requirements

Pursuant to Section 19(b)(1) of the Securities Exchange Act of 1934 (''Act''),[1] notice is hereby given that on March 2, 1999, The Options Clearing Corporation (''OCC'') filed with the Securities and Exchange Commission (''Commission'') the proposed rule change as described in Items I and II below, which items have been prepared primarily by OCC. The Commission is publishing this notice and order to solicit comments on the proposed rule change from interested persons and to grant accelerated approval of the proposal.

I. Self-Regulatory Organization's Statement of the Terms of Substance of the Proposed Rule Change

The purpose of the proposed rule change is to provide OCC with the flexibility to designate certain classes of stock fund options as non-equity securities options for purposes of determining margin and clearing fund requirements.[2]

II. Self-Regulatory Organization's Statement of the Purpose of and Statutory Basis for, the Proposed Rule Change

In its filing with the Commission, OCC included statements concerning the purpose of and basis for the proposed rule change and discussed any comments it received on the proposed rule change. The text of these statements may be examined at the places specified in Item IV below. OCC has prepared summaries, set forth in sections (A), (B), and (C) below, of the most significant aspects of such statements.[3]

(A) Self-Regulatory Organization's Statement of the Purpose of, and Statutory Basis for, the Proposed Rule Change

The proposed rule change will permit OCC to designate certain options on stock funds as non-equity options for purposes of margin and clearing fund calculations.[4] The American Stock Exchange lists and trades stock fund options on certain Standard & Poor's Depository Receipts (''SPDRs'') and plans to trade options on World Equity Benchmark Shares (''WEBs'') in the near future. OCC proposes to continue to treat stock fund options like stock options for the clearance and settlement purposes because stock fund options are settled through delivery of the underlying fund shares.

However, OCC believes that for margin and clearing fund purposes it would be more logical to treat some stock fund options like non-equity options because the value of the fund shares more closely correlates to the value of an underlying index. The proposed rule change will allow OCC to add such stock fund options to the permissible instruments used to offset index related positions. OCC believes that such flexibility will potentially allow OCC to prudently reduce the amount of margin and clearing fund collateral required to be deposited by clearing members.

Under the proposed rule change, OCC will have the discretion to designate classes of stock fund options as non-equity options for margin purposes in order to efficiently process these securities while effectively managing their risk. When classes of stock fund options are designated as non-equity securities options contracts, they will be subject to the margin requirements of

[1] 15 U.S.C. 78s(b)(1).

[2] The complete text of the proposed rule change is included in OCC's filing, which is available for inspection and copying at the Commission's public reference room and through OCC.

[3] The Commission has modified the text of the summaries prepared by OCC.

[4] OCC previously amended its rules to accommodate options on instruments such as SPDRs and WEBs and to process, settle and margin them like options on equity securities. Securities Exchange Act Release No. 40132 (June 25, 1998), 63 FR 36467 [File No. SR–OCC–97–02]. In another filing, OCC introduced the term ''stock fund shares'' and replaced the term ''common stocks'' with the phrase ''equity securities.'' Securities Exchange Act Release No. 40595 (October 23, 1998), 63 FR 58438 [File No. SR–OCC–98–08].

rule 602 and will be included in the non-equity securities clearing fund.

When no such designation is made, they will be subject to the margin requirements of Rule 601. Stock fund options that do not correlate closely with any index will continue to be treated like stock options for margin purposes and will not be used to offset short positions relating to a particular index. However, under Rule 601(c) and Interpretation .02 to Rule 601, 30% of their value can be used to reduce a clearing member's equity margin requirement. Such stock fund options will be included in the stock clearing fund because they fall within the definition of ''stock option contract'' in Article 1 of OCC's By-Laws, which would be controlling in the absence of a designation. OCC intends to provide members its designation of the stock fund options for margin and clearing fund purposes in information memoranda made available to all clearing members.

Under the proposed rule change, OCC will amend the definition of ''stock option contract'' within the definition of ''option contract'' in Article 1 of the By-Laws to include stock fund shares. In addition, a provision will be added to the definition stating that for purposes of Article VIII of the By-Laws and Chapters VI and X of the Rules, OCC may designate certain stock fund options as non-equity securities option contracts. OCC is also adding introductions to Article VIII of the By-Laws and Chapters VI and X of the Rules which state that OCC may designate certain stock fund options as non-equity securities options contracts for purposes of those provisions. Finally, because fund shares are priced like stocks, new subsection (b)(6)(1) will be added to Rule 602 to define ''marking price'' for an index share to be its last reported sale price on its primary market.

OCC believes that the proposed rule changes are consistent with the requirements of the Section 17A of the Act[5] and the rules and regulations thereunder because it promotes the prompt and accurate clearance and settlement of transactions in stock fund options by allowing OCC to treat such options like stock options for settlement purposes but like non-equity options for margin and clearing fund purposes, as appropriate.

[5] 15 U.S.C. 78q–1.

(B) Self-Regulatory Organization's Statement on Burden on Competition

OCC does not believe that the proposed rule change would impose any material impact on competition.

(C) Self-Regulatory Organization's Statement on Comments on the Proposed Rule Change Received From Members, Participants or Others

Written comments were not and are not intended to be solicited with respect to the proposed rule change, and none have been received.

III. Date of Effectiveness of the Proposed Rule Change and Timing for Commission Action

Section 17A(b)(3)(F) of the Act [6] requires that the rules of a clearing agency be designed to assure the safeguarding of securities and funds which are in the custody or control of the clearing agency or for which it is responsible. The Commission finds that the proposed rule change is consistent with this obligation because it should allow OCC to more accurately calculate the margin and clearing fund collateral required to be deposited by clearing members.

The Commission finds good cause for approving the proposed rule change prior to the thirtieth day after the publication of notice of the filing. Approving prior to the thirtieth day after publication of notice will allow OCC to immediately increase the accuracy of margin and clearing fund calculations for these hybrid exchange-traded fund share options.

IV. Solicitation of Comments

Interested persons are invited to submit written data, views, and arguments concerning the foregoing, including whether the proposed rule change is consistent with the Act. Persons making written submissions should file six copies thereof with the Secretary, Securities and Exchange Commission, 450 Fifth Street, NW, Washington, DC 20549–0609. Copies of the submission, all subsequent amendments, all written statements with respect to the proposed rule change that are filed with the Commission, and all written communications relating to the proposed rule change between the Commission and any person, other than those that may be withheld from the public in accordance with the provisions of 5 U.S.C. 552, will be available for inspection and copying in the Commission's Public Reference Section, 450 Fifth Street, NW, Washington, DC 20549. Copies of such filing also will be available for inspection and copying at the principal office of OCC. All submissions should refer to File No. SR–OCC–99–02 and should be submitted by July 23, 1999.

[6] 15 U.S.C. 78q–1(b)(3)(F).

It is therefore ordered, pursuant to Section 19(b)(2) of the Act,[7] that the proposed rule change (File No. SR–OCC–99–02) be and hereby is approved.

For the Commission by the Division of Market Regulation, pursuant to delegated authority.[8]

Margaret H. McFarland,

Deputy Secretary.

[FR Doc. 99–16864 Filed 7–1–99; 8:45 am]

BILLING CODE 8010–01–M

[7] 15 U.S.C. 78s(b)(2).

[8] 17 CFR 200.30–3(a)(12).

SECURITIES AND EXCHANGE COMMISSION

[Release No. 34–41555; File No. SR–PCX–99–16]

Self-Regulatory Organizations; Notice of Filing of Proposed Rule Change by the Pacific Exchange, Inc. Relating to the Requirement for Off-Floor Traders for Which the Exchange Is the Designated Examining Authority To Successfully Complete the General Securities Representative Examination Series 7

June 24. 1999.

Pursuant to Section 19(b)(1) of the Securities Exchange Act of 1934 (''Act'')[1] and Rule 19b–4 thereunder,[2] notice is hereby given that on June 1, 1999, the Pacific Exchange, Inc. (''PCX'' or ''Exchange'') filed with the Securities and Exchange Commission (''SEC'' or ''Commission'') the proposed rule change as described in Items I, II and III below, which Items have been prepared by the Exchange. The Commission is publishing this notice to solicit comments on the proposed rule change from interested persons.

I. Self-Regulatory Organization's Statement of the Terms of Substance of the Proposed Rule Change

The Exchange proposes to require that qualified off-floor traders for which the PCX is the designated examining authority (''DEA'') successfully complete the General Securities Representative Examination Series 7 (''Series 7 Exam''). The text of the proposed rule change is available at the Office of the Secretary, the Exchange, and at the Commission.

[1] 15 U.S.C. 78s(b)(1).

[2] 17 CFR 204.19b–4.

II. Self-Regulatory Organization's Statement of the Purpose of, and Statutory Basis for, the Proposed Rule Change

In its filing with the Commission, the Exchange included statements concerning the purpose of, and basis for, the proposed rule change and discussed any comments it received on the proposed rule change. The text of these statements may be examined at the places specified in Item III below and is set forth in Sections A, B, and C below.

A. Self-Regulatory Organization's Statement of the Purpose of, and Statutory Basis for, the Proposed Rule Change

1. Purpose

Series 7 Exam Requirement

PCX Rule 1.7(b)(9) currently provides that the Exchange may deny (or may condition) membership, or may prevent a natural person from becoming associated (or may condition an association) with a member, when an applicant, directly or indirectly, does not successfully complete such written proficiency examinations as required by the Exchange to enable it to examine and verify the applicant's qualifications to function in one or more of the capacities applied for. The Exchange is now proposing to amend PCX Rule 1.7(b)(9) to expressly require designated off-floor traders to successfully complete the Series 7 Exam. Specifically, the proposal provides that traders of member organizations for which the Exchange is the DEA must successfully complete the Series 7 Exam if the primary business of the member organization involves the trading of securities which is unrelated to the performance of the functions of a registered specialist, a registered market maker or a registered floor broker. The proposal further provides that the following are exempt from the requirement to successfully complete the Series 7 Exam: Exchange members who perform the function of a registered specialist, registered market maker or registered floor broker (pursuant to PCX Rules 5.27(a), 6.33 or 6.44, respectively) and associated persons of member firms who facilitate the execution of stock transactions for the accounts of options market makers.

For purposes of PCX Rule 1.7(b)(9), the term ''trader'' is defined as a person who is directly or indirectly compensated by an Exchange member organization and who trades, makes trading decisions with respect to, or otherwise engages in the proprietary or agency trading of securities. In addition, the term ''primary business'' is defined as greater than 50% of the member organization's business. The Exchange notes that registered specialists, registered market makers and registered floor brokers are required to pass written examinations of the Exchange pursuant to PCS Rules 5.27(c), 6.33 and 6.44, respectively.[3]

Attestation Requirement

The proposed rule change further provides that each member organization for which the Exchange is the DEA must complete, on an annual basis, and on a form prescribed by the Exchange, a written attestation as to whether the member organization's primary business is performing the function of a registered specialist, a registered market maker or a registered floor broker (pursuant to PCX Rules 5.27(a), 6.33 or 6.47, respectively).

Rule Application to Current Traders

Subsection (C) of the proposed rule provides that the requirement to complete the Series 7 Exam will apply to current Traders of member organizations that meet the criteria of subsection (A), above, as well as to future Traders of member organizations that meet the criteria of subsection (A), above, at a later date. It further provides that Traders of member organizations that meet the criteria of subsection (A), above, at the time of SEC approval of this Rule, must successfully complete the Series 7 Exam within six months of notification by the Exchange.

2. Statutory Basis

The Exchange believes that the proposed rule change is consistent with Section 6(b)[4] of the Act, in general, and further the objectives of Section 6(b)(5),[5] in particular, in that it is designed to facilitate transactions in securities, to remove impediments to and perfect the mechanism of a free and open market and a national market system, and to protect investors and the public interest.

B. Self-Regulatory Organization's Statement on Burden on Competition

The Exchange does not believe that the proposed rule change will impose any burden on competition that is not necessary or appropriate in furtherance of the purposes of the Act.

C. Self-Regulatory Organization's Statement on Comments on the Proposed Rule Change Received From Members, Participants or Others

Written comments on the proposed rule change were neither solicited nor received.

III. Date of Effectiveness of the Proposed Rule Change and Timing for Commission Action

Within 35 days of the date of publication of this notice in the **Federal Register** or within such longer period (i) as the Commission may designate up to 90 days of such date if it finds such longer period to be appropriate and publishes its reasons for so finding or (ii) as to which the self-regulatory organization consents, the Commission will:

(A) By order approve such proposed rule change, or

(B) institute proceedings to determine whether the proposed rule change should be disapproved.

IV. Solicitation of Comments

Interested persons are invited to submit written data, views and arguments concerning the foregoing, including whether the proposed rule change is consistent with the Act. Persons making written submissions should file six copies thereof with the Secretary, Securities and Exchange Commission, 450 Fifth Street, NW, Washington, DC 20549–0609. Copies of the submission, all subsequent amendments, all written statements with respect to the proposed rule change that are filed with the Commission, and all written communications relating to the proposed rule change between the Commission and any person, other than those that may be withheld from the public in accordance with the provisions of 5 U.S.C. 552, will be available for inspection and copying in the Commission's Public Reference Room. Copies of such filing will also be available for inspection and copying at the principal office of the PCX. All submissions should refer to File No. SR–PCX–99–16 and should be submitted by July 23, 1999.

For the Commission, by the Division of Market Regulation, pursuant to delegated authority.[6]

Margaret H. McFarland,

Deputy Secretary.

[FR Doc. 99–16867 Filed 7–1–99; 8:45 am]

BILLING CODE 8010–01–M

[3] The Exchange notes that other exchanges have recently adopted (or have proposed to adopt) a similar Series 7 Exam requirement for off-floor traders. *See* Chicago Stock Exchange Rules, Art. VI, Rule 3, Interpretation and Policy .02; Securities Exchange Act Release No. 41306 (April 16, 1999), 64 FR 22665 (April 27, 1999) (notice of filing of proposed rule change of the Philadelphia Stock Exchange).

[4] 15 U.S.C. 78f(b).

[5] 15 U.S.C. 78f(b)(5).

[6] 17 CFR 200.30–3(a)(12).

DEPARTMENT OF STATE

[Public Notice No. 3071]

Advisory Committee on International Economic Policy; Meeting Notice

The Advisory Committee on International Economic Policy (ACIEP) will meet from 9:00 a.m. to 12:00 p.m. on Tuesday, July 14, 1999, in Room 1107, U.S. Department of State, 2201 C Street, NW, Washington, DC 20520. The meeting will be hosted by Committee Chairman R. Michael Gadbaw and by Assistant Secretary of State for Economic and Business Affairs Alan P. Larson.

The ACIEP serves the U.S. Government in a solely advisory capacity concerning issues and problems in international economic policy. The objective of the ACIEP is to provide expertise and insight on these issues that are not available within the U.S. Government. Topics for the July 14 meeting will be: Next Steps in on the Anti-Corruption Agenda; Biotechnology: Fostering a Science-based, Rules-based Approach; Upcoming Review of the U.S. Bilateral Investment Treaty Program; and Developments in Kosovo and South East Europe.

Members of the public may attend these meetings as seating capacity allows. Members of the media are welcome but discussions are off the record. Admittance to the Department of State Building is by means of a pre-arranged clearance list. In order to be placed on this list, please provide your name, title, company or other affiliation if appropriate, social security number, date of birth, and citizenship to the ACIEP Executive Secretariat by phone at (202) 647–5968 or fax (202) 647–5713 (Attention: Sharon Rogers) by Friday, July 9, 1999. On the date of the meeting, persons who have registered should come to the ''C'' Street entrance. One of the following valid means of identification will be required for admittance: A U.S. driver's license with photo, a passport, or a U.S. Government ID.

For further information, contact Sharon Rogers, ACIEP Secretariat, U.S. Department of State, Bureau of Economic and Business Affairs, Room 6828, Main State, Washington, DC 20520.

Dated: June 25, 1999.

William J. McGlynn,

Executive Secretary.

[FR Doc. 99–16914 Filed 7–1–99; 8:45 am]

BILLING CODE 4710–07–P

DEPARTMENT OF TRANSPORTATION

Federal Highway Administration

Environmental Impact Statement: Pierce County, Washington

AGENCY: Federal Highway Administration (FHWA), DOT.

ACTION: Notice of intent.

SUMMARY: The FHWA is issuing this notice to advise the public that a Tier II Environmental Impact Statement will be prepared for the proposed extension of the SR 167 freeway in Pierce County, Washington from SR 161 (Meridian Street North) in the city of Puyallup to the SR 509 freeway (east west road alignment) in the city of Tacoma.

FOR FURTHER INFORMATION CONTACT: Gene Fong, Division Administrator, Federal Highway Administration, 711 South Capitol Way, Suite 501, Olympia, WA 98501, telephone: (360) 753–9413; Don Nelson, Assistant Secretary, Environmental and Engineering Service Center, PO Box, 47323, Olympia, WA 98504, telephone: (360) 705–7101; and/or Gary Demich, P.E., Region Administrator, Olympic Region, Washington State Department of Transportation, 5720 Capitol Boulevard, PO Box 47440, Olympia, WA 98504, telephone: (360) 357–2605; and/or Dennis Engel, P.E., Project Engineer, Consultant Design Office, 6639 Capitol Boulevard, P.O. Box 47443, Olympia, WA 98504, telephone: (360) 570–6640.

SUPPLEMENTARY INFORMATION: The FHWA, in cooperation with Washington State Department of Transportation (WSDOT) will prepare a Tier II Environmental Impact Statement (EIS) to determine the most feasible alignment alternative of the SR 167 freeway which will meet purpose and need of the proposed project, while balancing environmental needs. The freeway extension will be approximately 9.7 kilometers (6.0 mile) in length. The freeway is expected to require six lanes including HOV lanes. The HOV lanes will be constructed when warranted.

The purpose of the project is to improve regional mobility of the transportation system to better serve multi-modal freight and passenger movement between SR 167, SR 410, and SR 512 and the Interstate 5 corridor and the new SR 509 freeway; reduce congestion and improve safety on the arterials and intersections in the study area. The proposed segment will provide system continuity between the SR 167 corridor and Interstate 5; and maintain or improve air quality in the corridor to ensure compliance with the current State Implementation Plan and requirements of the Clean Air Act.

There are a number of problems associated with the non-freeway segment of SR 167 through Puyallup and Fife to the Interstate 5 corridor/Port of Tacoma/Fife area. The non-freeway segment, which is an incomplete part of the north Pierce County freeway system as planned, is on the existing surface street system and includes a circuitous route through Puyallup on the existing inadequate SR 167, and Fife via Valley Avenue and 54th Avenue East. These existing, highly congested facilities serve as a major truck route for the Port of Tacoma. Several intersections along these routes operate at over capacity conditions during peak hours resulting in traffic backups and delays. The heavy truck traffic on the non-freeway segment also exacerbate the safety problem. Accident ratios, on the non-freeway segment of SR 167, are 20 to 70 percent high er than statewide averages for similar highways due to high level of congestion at intersections and intersecting driveways.

Tier I FEIS was completed in April 1999. The FHWA concurred with WSDOT in the selection of corridor Alternative 2 for completing State Route 167 from State Route 161 to State Route 509 and signed a Record of Decision in June 1999. A complete description of all alternative studied, including general design elements sufficient to compare alternatives and environmental impacts, is included in the Tier I FEIS (FHWA–WA–EIS–1993–2–F). This document is available for review at local libraries.

The Tier II EIS process will consist of performing engineering analyses on alternative alignments within the selected corridor to determine the negative environmental consequences and evaluate ways to avoid, minimize or mitigate for those consequences at the conclusion of the Tier II process. The do-nothing alternative will also be evaluated. Ultimately, the overall, environmentally preferred alternative will be identified and adopted as appropriate.

Two scoping meetings are planned on July 13, 1999, for agencies, organizations and the public. Time and location for the meetings will be announced by letters, local newspaper and/or through news letters. Subsequent to the scoping meetings, continued public involvement opportunities are included in the EIS public involvement plan. These include newsletters, community workshops, a project web site, bulletins, stakeholder interviews, paid media advertisements, and formation of Citizen Advisory Committee to ensure public information

and to generate input in the project as it advances through the development/EIS process. A Partners Committee, made up of sponsoring agencies and municipalities in the area, has been formed to cooperatively deal with issues as they arise.

Announcements describing the proposed action and soliciting input on the project will be sent to the appropriate Federal, State, and local agencies, affected Indian Tribes, private organizations, and citizens who have previously expressed or are known to have an interest in this proposal. A series of open houses will be scheduled during the project development process as a part of the EIS public involvement plan. Input from these open houses and scoping meetings will be used to help identify the design alternatives for study in the EIS. A public hearing will be held after the release of the Draft EIS to receive public and agency comments. There will be public notice announcing the time and place of future meetings and the hearing. The Draft EIS will be available for public and agency review and comment prior to the public hearing.

To ensure that the full range of issues related to this proposed action are addressed, and all significant issues have been identified, comments and suggestion are invited from all interested parties. Comments or questions concerning this proposed action and the EIS should be directed to the FHWA or WSDOT at the addresses and phone numbers provided above.

(Catalog of Federal Domestic Assistance Program Number 20.205, Highway Research, Planning and Construction. The regulations implementing Executive Order 12372 regarding intergovernmental consultantion on Federal programs and activities apply to this program)

Issued on: June 25, 1999.

James Leonard,

Transportation and Environmental Engineer, FHWA Washington Division.

[FR Doc. 99–16853 Filed 7–1–99; 8:45 am]

BILLING CODE 4910–22–M

DEPARTMENT OF TRANSPORTATION

Surface Transportation Board

[STB Docket No. MC–F–20947]

Francis Tedesco, Mark Tedesco, Frank Tedesco Trust, Francis Tedesco Trust and Mark Tedesco Trust—Acquisition—Red Apple Transit, Inc., Hoboken Transportation Company, Inc., Willow Bus Line, Inc., and Agresta Bus Company, Inc.

AGENCY: Surface Transportation Board.

ACTION: Notice tentatively approving finance application.

SUMMARY: Applicants, Francis Tedesco, Mark Tedesco, Frank Tedesco Trust, Francis Tedesco Trust and Mark Tedesco Trust, noncarrier individuals who control several motor passenger carriers and a noncarrier, No. 22 Hillside Corp. (No. 22 Hillside), seek approval under 49 U.S.C. 14303 to acquire, through No. 22 Hillside, certain properties and the operating authorities of the following motor passenger carriers: Red Apple Transit, Inc. (Red Apple), Hoboken Transportation Company, Inc. (Hoboken), Willow Bus Line, Inc. (Willow), and Agresta Bus Company, Inc., d/b/a Red Apple Transit, Inc. (Agresta) (collectively referred to as the acquired carriers). Persons wishing to oppose the application must follow the rules at 49 CFR 1182. The Board has tentatively approved the transaction and, if no opposing comments are timely filed, this notice will be the final Board action.

DATES: Comments must be filed by August 16, 1999. Applicants may file a reply by August 31, 1999. If no comments are filed by August 16, 1999, this notice is effective on that date.

ADDRESSES: Send an original and 10 copies of any comments referring to STB Docket No. MC–F–20947 to: Surface Transportation Board, Office of the Secretary, Case Control Unit, 1925 K Street, NW, Washington, DC 20423–0001. In addition, send one copy of comments to applicants' representative: Fritz R. Kahn, Suite 750 West, 1100 New York Avenue, NW, Washington, DC 20005–3934.

FOR FURTHER INFORMATION CONTACT: Beryl Gordon, (202) 565–1600. [TDD for the hearing impaired: (202) 565–1695.]

SUPPLEMENTARY INFORMATION: Applicants directly control Academy Bus Tours, Inc. (Academy Bus),[1] Academy Express, Inc. (Academy Express),[2] Academy Lines, Inc. (Academy Lines)[3] (the Academy companies), Asbury Park Transit Lines (Asbury),[4] Commuter Bus Line, Inc. (Commuter),[5] and No. 22 Hillside. Under the proposed transaction, applicants will indirectly acquire, through No. 22 Hillside, certain properties and the interstate and New Jersey intrastate operating authorities of Red Apple,[6] Hoboken,[7] and Willow,[8] and the New Jersey intrastate operating authority of Agresta.[9]

Applicants state that the aggregate gross operating revenues of the motor passenger carriers that they control exceeded $2 million in calendar year 1998. Applicants also state that No. 22 Hillside will continue to provide the same operations that were provided by the acquired carriers; that applicants will incur no debt in their acquisition so there will be no increase in fixed charges; and that the employees of the acquired carriers will be offered the opportunity to apply for positions with the motor passenger carriers controlled by applicants.

Applicants submit that the proposed transaction will benefit the traveling public. According to applicants, the frequency of schedules will be increased, giving the public a greater choice of buses, and the schedules will be coordinated with those of the other Academy companies, reducing the need for transfers and making passenger service more convenient. Applicants also submit that their motor passenger carriers have regularly scheduled safety training programs and employ a full-time safety director to supervise their operations. They operate fleets of approximately 600 buses, cooperate to make volume purchases of fuel, tires and other supplies, and operate two large garages in Secaucus and Hoboken, NJ, where their buses routinely are inspected, repaired and maintained. In addition, applicants have access to

---

[1] Academy Bus holds federally issued operating authority in Docket No. MC–165004 to provide passenger service and other regular-route operations principally between New York City and various points in New Jersey, Pennsylvania, and New York, and to conduct nationwide special and charter operations.

[2] Academy Express holds federally issued operating authority in Docket No. MC–145482 to provide passenger service between New York City and various points in New Jersey and to conduct nationwide special and charter operations.

[3] Academy Lines holds federally issued operating authority in Docket No. MC–106207 to provide passenger service and other regular-route operations principally between New York City and various points in New Jersey and Pennsylvania and to conduct nationwide special and charter operations.

[4] Asbury holds federally issued operating authority in Docket No. MC–1002 to provide passenger service between New York City and various points in New Jersey and to conduct nationwide special and charter operations.

[5] Commuter holds federally issued operating authority in Docket No. MC–162133 to provide passenger service between New York City and various points in New Jersey and to conduct nationwide special and charter operations.

[6] Red Apple holds federally issued operating authority in Docket No. MC–182453 to provide passenger service between New York City and various points in New Jersey.

[7] Hoboken holds federally issued operating authority in Docket No. MC–54000 to provide passenger service between New York City and various points in New Jersey.

[8] Willow holds federally issued operating authority in Docket No. MC–240453 to provide passenger service between New York City and various points in New Jersey.

[9] Agresta holds intrastate operating authority to provide passenger service in New Jersey.

financial resources and profess to possess management skills that will permit the operations by the acquired carriers to grow.

Applicants certify that: (1) the motor passenger carriers controlled by the applicants and Red Apple, Hoboken, and Willow hold satisfactory safety ratings from the U.S. Department of Transportation; (2) the carriers have the requisite liability insurance; (3) no carrier is domiciled in Mexico or owned or controlled by persons of that country; and (4) approval of the transaction will not significantly affect either the quality of the human environment or the conservation of energy resources.

Under 49 U.S.C. 14303(b), we must approve and authorize a transaction we find consistent with the public interest, taking into consideration at least: (1) the effect of the transaction on the adequacy of transportation to the public; (2) the total fixed charges that result; and (3) the interest of affected carrier employees.

On the basis of the application, we find that the proposed acquisition is consistent with the public interest and should be authorized. If any opposing comments are timely filed, this finding will be deemed vacated and, unless a final decision can be made on the record as developed, a procedural schedule will be adopted to reconsider the application.[10] If no opposing comments are filed by the expiration of the comment period, this decision will take effect automatically and will be the final Board action.

Board decisions and notices are available on our website at ''WWW.STB.DOT.GOV.''

This decision will not significantly affect either the quality of the human environment or the conservation of energy resources.

It is ordered:

1. The proposed acquisition is approved and authorized, subject to the filing of opposing comments.

2. If timely opposing comments are filed, the findings made in this decision will be deemed to be vacated.

3. This decision will be effective on August 16, 1999, unless timely opposing comments are filed.

4. A copy of this notice will be served on: (1) the U.S. Department of Justice, Antitrust Division, 10th Street & Pennsylvania Avenue, NW, Washington, DC 20530; and (2) the U.S. Department of Transportation, Office of Motor Carriers–HIA 30, 400 Virginia Avenue, SW, Suite 600, Washington, DC 20024.

[10] Under 49 CFR 1182.6(c), a procedural schedule will not be issued if we are able to dispose of opposition to the application on the basis of comments and the reply.

Decided: June 28, 1999.

By the Board.

Vernon A. Williams,

Secretary.

[FR Doc. 99–16896 Filed 7–1–99; 8:45 am]

BILLING CODE 4915–00–P

DEPARTMENT OF TRANSPORTATION

Surface Transportation Board

[STB Docket No. AB–32 (Sub–No. 87X)]

Boston and Maine Corporation—Abandonment Exemption—in Rockingham and Hillsborough Counties, NH

Boston and Maine Corporation (B&M) has filed a notice of exemption under 49 CFR 1152 Subpart F—*Exempt Abandonments and Discontinuances* to abandon an approximately 5.78-mile line of railroad on the Manchester to Lawrence Branch between engineering station 2474+75 and engineering station 2780+36 in Rockingham and Hillsborough Counties, NH. The line traverses United States Postal Service Zip Codes 03101, 03103 and 03053.

B&M has certified that: (1) no local traffic has moved over the line for at least 2 years; (2) any overhead traffic has been rerouted over other lines; (3) no formal complaint filed by a user of rail service on the line (or by a state or local government entity acting on behalf of such user) regarding cessation of service over the line either is pending with the Surface Transportation Board (Board) or with any U.S. District Court or has been decided in favor of complainant within the 2-year period; and (4) the requirements at 49 CFR 1105.7 (environmental reports), 49 CFR 1105.8 (historic reports), 49 CFR 1105.11 (transmittal letter), 49 CFR 1105.12 (newspaper publication), and 49 CFR 1152.50(d)(1) (notice to governmental agencies) have been met.

As a condition to this exemption, any employee adversely affected by the abandonment shall be protected under *Oregon Short Line R. Co.—Abandonment— Goshen*, 360 I.C.C. 91 (1979). To address whether this condition adequately protects affected employees, a petition for partial revocation under 49 U.S.C. 10502(d) must be filed. Provided no formal expression of intent to file an offer of financial assistance (OFA) has been received, this exemption will be effective on August 1, 1999, unless stayed pending reconsideration. Petitions to stay that do not involve environmental issues,[1] formal expressions of intent to file an OFA under 49 CFR 1152.27(c)(2),[2] and trail use/rail banking requests under 49 CFR 1152.29 must be filed by July 12, 1999. Petitions to reopen or requests for public use conditions under 49 CFR 1152.28 must be filed by July 22, 1999, with: Surface Transportation Board, Office of the Secretary, Case Control Unit, 1925 K Street, NW, Washington, DC 20423.

A copy of any petition filed with the Board should be sent to applicant's representative: Robert B. Culliford, Esq., Boston and Maine Corporation, Law Department, Iron Horse Park, North Billerica, MA 01862.

If the verified notice contains false or misleading information, the exemption is void *ab initio.*

B&M has filed an environmental report which addresses the abandonment's effects, if any, on the environment and historic resources. The Section of Environmental Analysis (SEA) will issue an environmental assessment (EA) by July 7, 1999. Interested persons may obtain a copy of the EA by writing to SEA (Room 500, Surface Transportation Board, Washington, DC 20423) or by calling SEA, at (202) 565–1545. Comments on environmental and historic preservation matters must be filed within 15 days after the EA becomes available to the public.

Environmental, historic preservation, public use, or trail use/rail banking conditions will be imposed, where appropriate, in a subsequent decision.

Pursuant to the provisions of 49 CFR 1152.29(e)(2), B&M shall file a notice of consummation with the Board to signify that it has exercised the authority granted and fully abandoned the line. If consummation has not been effected by B&M's filing of a notice of consummation by July 2, 2000, and there are no legal or regulatory barriers to consummation, the authority to abandon will automatically expire.

Board decisions and notices are available on our website at ''WWW.STB.DOT.GOV.''

Decided: June 25, 1999.

[1] The Board will grant a stay if an informed decision on environmental issues (whether raised by a party or by the Board's Section of Environmental Analysis in its independent investigation) cannot be made before the exemption's effective date. *See Exemption of Out-of-Service Rail Lines*, 5 I.C.C.2d 377 (1989). Any request for a stay should be filed as soon as possible so that the Board may take appropriate action before the exemption's effective date.

[2] Each offer of financial assistance must be accompanied by the filing fee, which currently is set at $1000. *See* 49 CFR 1002.2(f)(25).

By the Board, David M. Konschnik, Director, Office of Proceedings.

Vernon A. Williams,

Secretary.

[FR Doc. 99–16792 Filed 7–1–99; 8:45 am]

BILLING CODE 4915–00–P

DEPARTMENT OF THE TREASURY

Fiscal Service

Renegotiation Board Interest Rate; Prompt Payment Interest Rate; Contract Disputes Act

AGENCY: Bureau of the Public Debt, Fiscal Service, Treasury.

ACTION: Notice.

SUMMARY: For the period beginning July 1, 1999 and ending on December 31, 1999 the prompt payment interest rate is 6.50 per centum per annum.

ADDRESSES: Comments or inquiries may be mailed to Eleanor Farrar, Team Leader, Debt Accounting Branch, Office of Public Debt Accounting, Bureau of the Public Debt, Parkersburg, West Virginia, 26106–1328. A copy of this Notice will be available to download from the http://www.publicdebt.treas.gov.

DATES: This notice announces the applicable interest rate for the July 1, 1999 to December 31, 1999 period.

FOR FURTHER INFORMATION CONTACT: Stephanie Brown, Debt Accounting Branch Manager, Office of Public Debt Accounting, Bureau of the Public Debt, Parkersburg, West Virginia, 26106–1328, (304) 480–5181, Eleanor Farrar, Team Leader, Debt Accounting Branch, Office of Public Debt Accounting, Bureau of the Public Debt, (304) 480–5166, Edward C. Gronseth, Deputy Chief Counsel, Office of the Chief Counsel, Bureau of the Public Debt, (304) 480–3692, or Kavita Kalsy, Attorney-Adviser, Office of the Chief Counsel, Bureau of the Public Debt, (304) 480–3682.

SUPPLEMENTARY INFORMATION: Although the Renegotiation Board is no longer in existence, other Federal Agencies are required to use interest rates computed under the criteria established by the Renegotiation Act of 1971 Sec. 2, Pub.L. 92–41, 85 Stat. 97. For example, the Contract Disputes Act of 1978 Sec. 12, Pub.L. 95–563, 92 Stat. 2389 and the Prompt Payment Act of 1982 Sec. 2, Pub.L. 97–177, 96 Stat. 85 provide for the calculation of interest due on claims at a rate established by the Secretary of the Treasury pursuant to 31 U.S.C. 3902(a).

Therefore, notice is given that, the Secretary of the Treasury has determined that the rate of interest applicable, for the period beginning July 1, 1999 and ending on December 31, 1999, is 6.50 per centum per annum. This rate is determined pursuant to the above mentioned sections for the purpose of said sections.

Dated: June 29, 1999.

Donald V. Hammond,

Fiscal Assistant Secretary.

[FR Doc. 99–16962 Filed 6–29–99; 4:45 pm]

BILLING CODE 4810–39–P

federal register

Friday
July 2, 1999

Part II

Department of Health and Human Services

Health Care Financing Administration

42 CFR Part 482

Medicare and Medicaid Programs; Hospital Conditions of Participation: Patients' Rights; Interim Final Rule

DEPARTMENT OF HEALTH AND HUMAN SERVICES

Health Care Financing Administration

42 CFR Part 482

[HCFA–3018–IFC]

RIN 0938–AJ56

Medicare and Medicaid Programs; Hospital Conditions of Participation: Patients' Rights

AGENCY: Health Care Financing Administration (HCFA), HHS.

ACTION: Interim final rule with comment.

SUMMARY: This rule introduces a new Patients' Rights Condition of Participation (CoP) that hospitals must meet to be approved for, or to continue participation in, the Medicare and Medicaid programs. This interim final rule with comment sets forth six standards that ensure minimum protections of each patient's physical and emotional health and safety. These standards address each patient's right to notification of his or her rights; the exercise of his or her rights in regard to his or her care; privacy and safety; confidentiality of his or her records; freedom from restraints used in the provision of acute medical and surgical care unless clinically necessary; and freedom from seclusion and restraints used in behavior management unless clinically necessary.

The issue of patients' rights has been a longstanding concern for the Health Care Financing Administration. In December 1997, we published a proposed rule that introduced the proposed revision of all hospital CoPs, including a new Patients' Rights CoP. Work to finalize the complete revision of the hospital CoPs continues; however, the Patients' Rights CoP is being finalized separately in an accelerated time frame as recent reports have evidenced a pressing need for the codification and enforcement of these fundamental rights. Of particular concern is the danger posed to patient health and safety by violations of basic patients' rights, such as freedom from restraints and seclusion.

The Patients' Rights CoP, including the standard regarding seclusion and restraints, applies to all Medicare- and Medicaid-participating hospitals, that is, short-term, psychiatric, rehabilitation, long-term, children's, and alcohol-drug.

DATES: *Effective Date:* These regulations are effective on August 2, 1999.

Comment date: Comments on 42 CFR 482.13(e) (Standard: Restraint for acute medical and surgical care) and (f) (Standard: Seclusion and restraint for behavior management) will be considered if we receive them at the appropriate address as provided in the **ADDRESSES** section, no later than 5 p.m. on August 31, 1999. We will not consider comments on provisions of the regulation that remain unchanged from the December 19, 1997 proposed rule or on provisions that were changed based on our consideration of public comments.

ADDRESSES: Mail comments (an original and three copies) to the following address: Health Care Financing Administration, Department of Health and Human Services, Attention: HCFA–3018–IFC, P.O. Box 7517, Baltimore, MD 21207–0517.

If you prefer, you may deliver your comments (an original and three copies) to one of the following addresses:

Room 443–G, Hubert Humphrey Building, 200 Independence Avenue, SW., Washington, DC 20201, or

Room C5–16–03, 7500 Security Boulevard, Baltimore, MD 21244–1850

Because of staffing and resource limitations, we cannot accept comments by facsimile (FAX) transmission. In commenting, please refer to file code HCFA–3018–IFC. Comments received timely will be available for public inspection as they are received generally beginning approximately 3 weeks after publication of a document, in Room 443–G of the Department's offices at 200 Independence Avenue, SW., Washington, DC, on Monday through Friday of each week from 8:30 a.m. to 5 p.m. (phone: (202) 690–7890).

FOR FURTHER INFORMATION CONTACT: Monique Howard, OTR (410–786–3869); Julie Moyers (410–786–6772); Anita Panicker, RN, LCSW (410–786–5646); or Rachael Weinstein, RN (410–786–6775).

I. Background

A. General

On December 19, 1997, we published a proposed rule entitled ''Medicare and Medicaid Programs; Hospital Conditions of Participation; Provider Agreements and Supplier Approval'' at 62 FR 66726 to revise the entire set of conditions of participation (CoPs) for hospitals that are found at 42 CFR part 482. The CoPs are the requirements that hospitals must meet to participate in the Medicare and Medicaid programs. These CoPs are intended to protect patient health and safety and to ensure that high quality care is provided to all patients. The State survey agencies (SAs), under contract with us, survey hospitals to assess compliance with the CoPs. The SAs conduct these surveys using the *State Operations Manual* (SOM) (HCFA Publication No. 7). The SOM contains the regulatory language of the CoPs as well as interpretive guidelines and survey probes that elaborate on regulatory intent and give in-depth detail about how to maintain compliance. The SOM also outlines the survey process and provides guidance for State administration of the survey program. Under § 489.10(d), the SAs determine whether hospitals meet the CoPs and make corresponding recommendations to us about the hospital's certification, (that is, whether the hospital has met the standards required to provide Medicare and Medicaid services and receive Federal and State reimbursement).

Under section 1865 of the Act and § 488.5 (Effect of JCAHO or AOA accreditation of hospitals), hospitals accredited by the Joint Commission on Accreditation of Healthcare Organizations (JCAHO) or the American Osteopathic Association (AOA) are not routinely surveyed for compliance by the SAs but are deemed to meet the requirements in the CoPs based on their accreditation.

B. Why a Patients' Rights CoP Is Needed

In recent years, State surveyors, patient advocacy groups, the media, and the general public have brought complaints about hospitals violating patients' rights to our attention. These violations have consisted of denying or frustrating a patient's access to care, denying a patient's full involvement in his or her treatment, disregarding a patient's advance directives, denying a patient's access to his or her medical records, or inappropriately using seclusion or restraints. Particularly within the past year, the public, media, and the Congress have grown increasingly concerned about the need to ensure basic protections for patient health and safety in hospitals, especially with regard to the use of restraints and seclusion. The Hartford Courant, a Connecticut newspaper, heightened public awareness of this issue with a series of articles in October 1998 citing the results of a study that identified 142 deaths from seclusion or restraints use in behavioral health treatment facilities over the past 10 years. The majority were adolescent deaths.

C. Intent To Examine Restraint and Seclusion in Other Settings

Federal regulations for nursing homes already stress the right to be free of restraints, and over the past 10 years, significant strides have been made in

reducing inappropriate restraints used in this care setting. The Patients' Rights CoP will further extend these protections to another major provider of health care. However, this rule will not cover all care settings. As we finalized this rule, various stakeholders lobbied for a much broader application of the seclusion and restraint provisions. We are looking into the advisability of adopting a cross-cutting restraints and seclusion standard that would affect other kinds of health care entities with whom we have provider agreements and the inpatient psychiatric services for individuals under age 21 benefit. We are requesting comment on whether we should set forth the same requirements as promulgated in this rule or whether more stringent standards would be appropriate. For example, is the current standard for continual monitoring of patients in restraint adequate for children or should all restraints for children be monitored only by direct staff observation? In addition, we acknowledge that more stringent standards exist in the Medicaid requirements for restraint use in intermediate care facilities for the mentally retarded. We are requesting comments on whether we should consider the same requirements for the hospital setting. We plan to make a decision on our approach to restraints and seclusion across these other settings and services by the end of the winter.

Some patient advocates have asked that we go well beyond these entities and regulate care furnished by providers with whom we have no provider agreements or care provided in settings where we may lack statutory authority under the Social Security Act (the Act). Barring a legislative change, we cannot mandate a restraint and seclusion standard for those care settings or providers.

D. Conformance of Patients' Rights in Hospitals with the Consumer Bill of Rights and Responsibilities (CBRR)

In February 1998, President Clinton directed the Department of Health and Human Services (DHHS), among other departments, to bring our health care programs into compliance with the CBRR, as recommended by the Presidential Advisory Commission on Consumer Protection and Quality in the Health Care Industry. We are strongly committed to achieving this goal and are continuing to work to ensure that the important consumer protections articulated in the rights are available to our beneficiaries, whether Medicare or Medicaid, whether in managed care or fee-for-service settings.

We have endeavored to incorporate the protections of the Bill of Rights into the structures and operations of the providers and plans that provide care to our beneficiaries. Some of the rights included in the proposed section § 482.10 (now § 482.13) have direct correlates in the Consumer Bill of Rights, but other significant protections provided by the CBRR were not mentioned in the December 1997 proposed rule. Even though some of these protections currently exist due to requirements on hospitals that are not affected by the revisions to the CoPs, we have decided not to add new regulatory requirements to the Patients' Rights standard without subjecting them to a more public vetting than is provided by an interim final rule. We therefore ask for comment on the following additional consumer rights, which we believe would need to be incorporated in the CoPs in order to achieve compliance with the Bill of Rights:

- Information Disclosure: According to the Bill of Rights, consumers should receive the following information from health care facilities:
  + Corporate form of the facility (that is, public or private; nonprofit or profit; ownership and management; affiliation with other corporate entities).
  + Accreditation status.
  + Whether specialty programs meet guidelines established by specialty societies or other appropriate bodies (for example, whether a cancer treatment center has been approved by the American College of Surgeons, the Association of Community Cancer Centers or the National Cancer Institute).
  + Volume of certain procedures performed at each facility.
  + Consumer satisfaction measures.
  + Clinical quality performance measures.
  + Procedures for registering a complaint and for achieving resolution of that complaint.
  + The availability of translation or interpretation services for non-English speakers and people with communication disabilities.
  + Numbers and credentials of providers of direct patient care (for example, registered nurses, other licensed providers, and other caregivers).
  + Whether the facility's affiliation with a provider network would make it more likely that a consumer would be referred to health professionals or other organizations in that network.
  + Whether the facility has been excluded from any Federal health programs (that is, Medicare or Medicaid).

In addition, although not specifically mentioned in the CBRR, patient safety necessitates that all hospitals should publicly disclose whether and when they provide emergency services.

- Protection of Whistleblowers: Hospitals should be prohibited from penalizing or seeking retribution against health care professionals or other health workers for advocating on behalf of their patients. Individuals would be assured of this right in the Patients' Rights section.
- Respect and Nondiscrimination: While the preamble discusses the applicable Federal and State laws that prohibit discrimination, an explicit patient right to nondiscrimination is not currently included and would be added to the Patients' Rights section.

E. Other Patients' Rights

The remainder of the hospital CoPs and other Federal requirements provide patients with additional rights that do not appear in the new Patients' Rights CoP. The fact that we have not explicitly stated or cross-referenced these rights in the final rule does not mean that they are not available to the patient, or that they are in any way less important than the rights that this rule establishes.

Some of these rights are stated elsewhere in law or regulation. For example, various the civil rights laws uphold the patient's right to be free of discrimination. When the hospital enters into a provider agreement with us, a condition of that agreement is that the hospital will abide by the principles and requirements of title VI of the Civil Rights Act, as implemented in regulation at 42 CFR part 80; section 504 of the Rehabilitation Act of 1973, as implemented by 45 CFR part 84; the Age Discrimination Act of 1975, as implemented by 45 CFR part 90; and other requirements of the Office for Civil Rights of DHHS (see 42 CFR 489.10, Basic requirements). These requirements span all of the provider types with whom we hold an agreement and provide individuals with important protections against discrimination. A second relevant example is the patient's right that springs from the anti-dumping regulations at § 489.24 (Special responsibilities of Medicare hospitals in emergency cases). The anti-dumping regulations prohibit Medicare-participating hospitals with emergency medical departments from refusing to examine or to treat medically unstable patients.

While these two examples are clear cut instances where patients' rights are already codified, less visible rights also exist. For example, since the hospital is required to have adequate nurse staffing

to provide nursing care to all patients as needed (see § 482.23, Condition of participation: Nursing services), one could argue that the patient is thereby afforded the right to receive adequate nursing services and care. Or, since the hospital is required to have dietary menus that meet the needs of the patients (see § 482.28, Condition of participation: Food and dietetic services), the patient has the right to a diet that meets his needs.

We considered an approach that would have grouped all conceivable patients' rights within this CoP; however, the practical value of this approach is questionable as these elements are codified elsewhere, and an approach that attempts to be all-inclusive often inadvertently omits key elements. We believe that it suffices to say that we expect the hospital to honor and promote all of the rights and protections that Federal law and the hospital CoPs offer. The rights codified by this rule either do not appear elsewhere, or, as evidenced by reports, require a special emphasis.

II. Legislation

Sections 1861(e) (1) through (8) of the Act define the term ''hospital'' and list the requirements that a hospital must meet to be eligible for Medicare participation. Section 1861(e)(9) of the Act specifies that a hospital must also meet such other requirements as the Secretary finds necessary in the interest of the health and safety of the hospital's patients. Under this authority, the Secretary has established in regulations at 42 CFR part 482 the requirements that a hospital must meet to participate in Medicare.

Section 1905(a) of the Act provides that Medicaid payments may be applied to hospital services. Regulations at § 440.10(a)(3)(iii) require hospitals to meet the Medicare CoPs to qualify for participation in Medicaid.

III. Provisions of the Proposed Regulations

In our December 19, 1997 proposed rule, we proposed revision of the Medicare hospital CoPs in concert with Vice President Gore's Reinventing Government (REGO) initiative. The REGO initiative emphasized lessening Federal regulation to eliminate unnecessary structural and process requirements, focus on outcomes of care, allow greater flexibility to hospitals and practitioners to meet quality standards, and place a strong emphasis on quality assessment and performance improvement.

In the proposed rule, we proposed setting forth a new Patients' Rights CoP in Medicare- and Medicaid-participating hospitals. The provisions of this CoP set forth minimum protections and promote patients' rights, including an individual's right to—(1) notification of his or her rights; (2) the exercise of his or her rights in regard to his or her care; (3) privacy and safety; (4) confidentiality; and (5) freedom from the use of seclusion or restraint of any form unless clinically necessary. In the preamble, we solicited comments on a more prescriptive approach to the use of restraints and seclusion and provided relevant examples.

Although we proposed codifying the new Patients' Rights CoP as § 482.10, in the final rule it is designated as § 482.13 to coordinate with the numbering system used in the current regulations. When the remaining hospital CoPs are finalized, we will renumber the standards in part 482.

Our commitment to the revision of the remaining hospital CoPs to focus on patient-centered, outcome-oriented care remains unchanged. We continue to work on analysis of the over 60,000 comments received on the proposed rule and will finalize the remaining hospital CoPs in the future.

IV. Comments and Responses

Of the 60,000 comments received on the December 1997 proposed rule, approximately 300 focused on the Patients' Rights CoP. Comments were received from hospitals, mental health treatment facilities, professional associations, accrediting bodies, SAs, patient advocacy groups, and members of the general public. Half of the comments, and the strongest opposition, came in response to the proposed fifth standard under Patients' Rights—seclusion and restraints. While many of the respondents did not favor prescriptive regulations that extended beyond the proposed regulations text, some welcomed more prescriptive language under the standard for seclusion and restraints.

A summary of the comments received on the five standards, major issues, and our responses follows.

A. Notice of Rights

We proposed that a hospital must inform each patient of his or her rights in advance of furnishing care and that the hospital must have a grievance process and indicate who the patient can contact to express a grievance.

Comment: Commenters indicated that what constitutes sufficient notification needs to be clarified. One commenter stated this requirement should be satisfied by providing written displays of patients' rights in the hospital lobby and in each patient's room, and in verbal or written form with initial and additional information included in the admission packet.

Response: We appreciate the suggestions of how and where patients' rights should be displayed or conveyed. However, hospitals will need flexibility to establish policies and procedures that effectively ensure that patients and their representatives have the information necessary to exercise their rights. These policies and procedures will need to address how, where, and when to notify patients of the full gamut of rights to which they are entitled under the Act. As hospitals assess the effectiveness of their proactive notification techniques, they need flexibility to continuously improve their performance in promoting patients' rights.

This CoP covers hospitals of varying sizes operating in a wide range of locations, serving diverse populations, with a variety of required notices; thus, flexibility and creativity to allow for the effective implementation of this requirement without undue burden is critical. Therefore, we are not including further prescriptive language detailing exactly where, how, when, and by whom this requirement must be carried out.

While we are committed to preserving flexibility on this point, we note that one method for efficiently handling aspects of this requirement may be to bundle notices with the existing information that must be provided to patients to fulfill Civil Rights requirements. The regulations implementing title VI of the Civil Rights Act of 1964, section 80.6(d), section 504 of the Rehabilitation Act of 1973 (45 CFR 84.8), and the Age Discrimination Act of 1975, section 91.32, require recipients of financial assistance from the DHHS to provide notice of their responsibility to comply with the appropriate nondiscrimination provisions and other pertinent requirements of the Office for Civil Rights. For a hospital that falls under this requirement, some patients' rights notices could be effectively posted next to these nondiscrimination notices. For some of the educational notices the patient will receive as part of the new Patients' Rights CoP, this public posting may be appropriate.

Comment: One commenter believed that the standards in the Patients' Rights CoP are generally reflected in common hospital practice; however, she objected to the general language that appeared at the beginning of the condition; specifically, the phrase, ''A hospital must protect and promote each patient's rights.'' This commenter was concerned

that the wording would be presented in isolation to juries during medical malpractice cases, and that it would be used to cover *all* legal and ethical rights. The commenter noted that a hospital staff person could not know or be responsible for providing this degree of information. The commenter suggested that the language be amended to read, ''A hospital is responsible to have policies and procedures in place which protect and promote the patient's rights as reflected in the following standards.''

Response: As stated earlier, we do expect the hospital to honor and promote each patient's rights, regardless of whether they appear in the Patients' Rights CoP. With respect to the commenter's concern that this statement will be taken in isolation and used in medical malpractice cases, we do not want to provide a foothold for frivolous cases. With that said, however, it could very well be that a patient who brings suit against a provider has a legitimate cause for concern or complaint because that provider failed to acknowledge his or her rights as established under these regulations. Such a case would generally require some substantiation and elaboration on specifically which right the provider failed to uphold. We are not persuaded that this language opens up an otherwise closed avenue for pursuing legal action. Accordingly, we are retaining this language.

Comment: One commenter noted that enumeration of the patient's rights is of little use if his or her only recourse is a grievance process that is controlled by the hospital. This commenter suggested adding a requirement that the patient also be notified that he or she could lodge a complaint with the State survey agency either after or during the course of the hospital stay, regardless of whether the patient decided to file a grievance with the hospital's system.

Response: The patient's right to file a complaint with or contact the accreditation body or the State to report an infraction on these rights is implicit; therefore, we do not believe it is necessary to add this to the regulations text. To address the commenter's concern, however, we will specify in the interpretive guidelines that patient notification of the grievance process must include the fact that the patient also may address his or her concerns to the State survey agency, regardless of whether he has first used the hospital's grievance process. Patients or residents of all Medicare-certified facilities have always had the ability to lodge complaints about the quality of care they receive with the State survey agency or HCFA, and nothing in this rule alters this opportunity. We will further specify that the patient be given a phone number and address for lodging a complaint with the SA.

Comment: Some commenters stated the proposed rule should account for the fact that in certain situations, the patient's age, condition, health problem, and emergency situation will inhibit the hospital's ability to notify the patient of his or her rights before the provision or discontinuation of care. Commenters believed that the rule should free hospital personnel from the responsibility of informing the patient of his or her rights if he or she is experiencing an emergency medical condition, is unconscious, or is at the hospital for a brief outpatient encounter.

Response: A hospital should make every effort to inform the patient of his or her rights before care provision or cessation of care. However, in some instances a patient's age, condition, health problem, or emergency situation does not allow the opportunity to communicate with the patient regarding his or her rights. For this reason, we are adding language to allow the hospital to communicate these rights to the patient's representative (as allowed under State law). In the absence of State law to cover particular health care decisions, the hospital may also communicate these rights to a legal representative whom the patient has appointed as an ''ad hoc'' decision maker in the event of temporary inability to make health care decisions. We still expect that as soon as the patient can be informed of his or her rights, the hospital will provide that information to the patient.

Comment: Some commenters stated that this discussion should be tailored to the patient's level of understanding or communication needs by using alternate means of communication (for example, audiotape, radio, sign language, and Braille, or other culturally competent vehicles), as necessary.

Response: Existing civil rights legislation (section 504 of the Rehabilitation Act of 1973 and the Americans with Disabilities Act (ADA)) emphasize the provision of effective aids, benefits, or services to individuals with disabilities. The ADA defines auxiliary aids and services as including qualified interpreters, notetakers, transcription services, written materials, telephone handset amplifiers, assistive listening devices, assistive listening systems, telephones compatible with hearing aids, closed captioning, telecommunications devices for deaf persons, videotext displays, or other effective methods of making aurally delivered materials available to individuals with hearing impairments; and qualified readers, taped texts, audio recordings, Brailled materials, large print materials, or other effective methods of making visually delivered materials available to individuals with visual impairments. Title VI of the Civil Rights Act of 1964 also requires recipients of certain public funds to serve persons who are ''Limited English Proficient'' (LEP). Translation of LEP documents, use of bilingual staff, and provision of interpreters are usually used to convey necessary information to LEP persons.

While we recognize the value of appropriate communication techniques, we do not offer further regulation in this area since existing laws ensure that appropriate attention will be given to providing information to those who require special accommodation based on their special needs.

Comment: Some commenters believed that the proposed rule needed to further define the patient's role and responsibility when being informed of his or her medical condition and that the standard should place more emphasis on discussion of prevention of complications and rehospitalization.

Response: The Patients' Rights CoP upholds the patient's right to full, informed involvement in his or her care. Under circumstances defined by State law, this right may also be exercised by the patient's legal representative on his or her behalf. We recognize that involvement in the plan of care and the choice of treatment option may be open to interpretation. We would like to clarify that this right to involvement in health care decisions cannot be equated with the ability to demand medically unnecessary treatments or care. The patient has the right to be informed of his or her status, to be involved in care planning and treatment, and to request and refuse treatment. The patient should be consulted about changes in care and treatment. Issues arising out of patient dissatisfaction with the hospital's response may be dealt with under the hospital's grievance process required under § 482.13(a); however, the patient may choose to lodge a complaint with the SA or accrediting body in addition to or instead of using the hospital's grievance system.

We agree that the patient's health and well-being are most likely affected by the degree of collaboration between the patient and physician. The patient should make every effort to bring medical problems to the attention of the physician in a timely fashion, provide information about his or her medical condition to the best of his or her knowledge, and work in a mutually respectful manner with the physician.

However, the patient's physical, mental, psychological, and emotional status may directly affect his or her ability to offer this degree of cooperation.

Comment: A commenter stated that a member of the interdisciplinary treatment team should document (in the medical record) that the patient's rights have been reviewed with the patient and whether the patient or his or her legal representative comprehends the information covered. A few commenters stated that social workers should notify patients of their rights at the time of the intake or screening interview.

Response: All of these suggestions have potential merit. However, as stated above, we believe it is necessary to provide the hospital with flexibility in developing policies and procedures that fulfill the requirement's intent, that is, to ensure that each patient's rights are protected.

Comment: A few commenters believed that no further details should be included in the regulation as more detail would add an unnecessary paperwork burden during the admission process while not guaranteeing improved quality of patient care.

Response: We have mandated neither the process that a hospital must use nor the extent to which these rights must be discussed as part of the admission process. In some cases, notification of these rights must occur later in the hospital stay to ensure that the patient's rights are protected. Hospitals will have the flexibility and accountability to determine how they can best ensure the protection of patients' rights.

Comment: A few commenters stated that the patient should be informed of the credentials, licensure, and professional qualifications, including certifications, of all personnel involved in his or her care through clear disclosure of this information on the hospital badge.

Response: We believe that this is an issue that hospitals should consider in developing their policies and procedures on notification of rights. We agree that it is important for patients to be aware of the identities of individuals who provide care in the hospital.

Comment: A few commenters suggested a patient should have the right to request care by a registered nurse (RN).

Response: Under the current hospital CoPs, hospitals are required to have 24-hour nursing services and an RN who supervises or evaluates the nursing care for each patient (§ 482.23(b)(3)). In addition, an RN must assign the nursing care of each patient to other nursing personnel in accordance with the patient's needs and the specialized qualifications and competence of the nursing staff available (§ 482.23(b)(5)). We believe that the patient has a right to nursing care in hospitals; however, we disagree with the commenter's assertion of the patient's inherent right to request and receive the direct services of an RN. In rural areas where access to health care practitioners can be problematic, to mandate this requirement is impractical and burdensome. The current nursing services requirement provides for RN services for each patient through supervision of the nursing care provided. Existing regulations address and provide for the appropriate level of care in situations where a patient's condition warrants an RN's direct service.

Comment: One commenter agreed with our proposal that hospitals should have a formal grievance process for complaints and recommendations. However, we received more comments in opposition to this requirement. Those who opposed the provision believed it to be unnecessary, burdensome to establish, and limited in scope since it pertains only to patients' rights. A commenter noted that we did not specify how the hospital should plan to investigate complaints or the time frame within which hospitals would be required to respond to grievances.

Response: As we stated in the December 1997 proposed rule, whenever possible, we have attempted to adopt an outcome-oriented focus rather than establish process requirements. However, we believe that the establishment of a grievance process promotes patient empowerment in health care. We recognize that in and of itself this process may not be sufficient to resolve all potential sources of conflict. For example, in a situation where a patient disagrees with a course of treatment, the disagreement might be between the patient and an independent physician or health plan rather than with the hospital itself. Some issues may more logically be pursued under Medicare or Medicaid complaint processes or through a State mechanism. For example, hospitals already have procedures for referring Medicare beneficiaries' complaints about quality and concerns about premature discharge to peer review organizations for investigation and review. Whatever the type of concern, we expect that the hospital's grievance process will facilitate prompt, fair resolution. The grievance process should route each concern timely to the appropriate decision-making body. This expectation for coordination has been added to the text of the final rule.

As noted earlier, the interpretive guidelines will reiterate that the notification of a grievance process must include the fact that the patient has the right to file a complaint with the SA regardless of whether he or she chooses to use the hospital's process, and that he must be provided with the SA's phone number and address.

We considered the commenters' concerns about burden; however, to remain silent on general expectations for the grievance process could result in the absence of key ingredients that promote a meaningful, substantial process that addresses patients' concerns and promotes their rights. To promote the creation of an effective grievance process, in § 482.13(a)(2), we are establishing general elements that should be common to grievance processes across all hospitals. Development of more detailed strategies and policies to comply with the requirement will be left to the discretion of each hospital.

Exercise of Rights

B. We proposed That the Patient Has the Right To Be Informed of His or Her Rights and To Participate in the Development and Implementation of His or Her Plan of Care

Comment: Commenters stated that the patient should be informed if the treatment is experimental in nature and informed of the types of outcomes the hospital has encountered from the care. Commenters also suggested that the patient and his or her representative should be informed of the nature, expected outcome, and potential complications of treatment options that are going to be undertaken, as well as the potential outcomes if the treatment is refused.

Response: The hospital should foster an atmosphere that supports two-way communication with the patient regarding his or her care. We expect that the hospital will hold the responsible physician accountable for discussing all information regarding treatment, experimental approaches (hospitals are required to comply with 45 CFR part 46, protection of subjects of human research), and possible outcomes of care to promote quality care delivery. We believe it is unnecessary to codify the elements that must be discussed with a patient regarding development of his or her plan of care, or with whom among the hospital's staff or practitioners the patient must speak to develop that plan of care. Flexibility is necessary because discussions of treatment information will differ for each patient.

C. We Proposed That the Patient Has the Right To Make Decisions Regarding His or Her Care

Comment: Some commenters stated that the final rule should emphasize the patient participating fully in his or her care. Commenters believed that this could be achieved by allowing the patient to receive second opinions before starting a procedure that significantly differs from the pre-admission plan of treatment. These commenters stated that the final rule should require the patient to ''sign-off on treatment options'' and should acknowledge the patient's ability to refuse treatment and to refuse to participate in experimental research.

Response: We agree that the patient must be adequately informed of these options so that he or she can make educated decisions regarding his or her care. The requirement supports this emphasis and implicitly includes the commenters' concerns that a patient be able to refuse a certain treatment or participation in experimental research. However, in light of this comment, we decided to introduce a higher degree of specificity in the final rule. First, we noted that the patient's representative (as allowed under State law) can also exercise the right to make informed decisions on the patient's behalf. Second, we introduced a more detailed description of what the patient's right to make informed decisions entails. The patient has the right to be informed of his or her health status, to be involved in care planning and treatment (this includes pain management, as this aspect of treatment planning is often not discussed with patients), and to be able to request and refuse treatment. Abridgement of these patients' rights would be subject to the grievance process required by § 482.13(a). It is critical to note, however, that the standard does not provide the patient with the right to demand treatment or services that are not clinically or medically indicated.

D. We proposed that the patient has the right To Formulate Advance Directives and To Have Hospital Staff and Practitioners Who Provide Care in the Hospital Comply With These Directives

Comment: One commenter wanted the issue of advance directives to be addressed at the time of the patient's Medicare enrollment rather than at the time of an acute care admission. This commenter stated that, ''Medicare beneficiaries could be required to designate their wishes with regard to 'do not resuscitate' (DNR) status and their surrogate healthcare decision-maker[s] as a condition of receiving the [Medicare] benefit. The CoP for the acute setting should address validating the beneficiary's 'pre-selected designations.'' '

Response: Section 1866(f) of the Act contains the provider requirements concerning the acknowledgment and handling of advance directives. The implementing regulations appear at 42 CFR part 489, Provider Agreements and Supplier Approval; specifically, at §§ 489.100 through 489.104. When we developed the December 1997 proposed rule, we believed that it was appropriate to reference advance directives in the Patients' Rights CoP, consistent with other Medicare provider CoPs (for example, existing regulations for nursing homes and home health agencies). The regulations governing advance directives and their implementation are not directly affected or under debate in this rule. This rule is not the appropriate venue for addressing the more general issue of advance directives, which spans provider types and is not specific to the hospital CoPs.

Comment: A commenter stated that the language regarding advance directives should encourage increased communication about and access to palliative care for the terminally ill. Another commenter believed that detailed advance directives should apply to inpatients, but not outpatients.

Response: Regarding the commenter's concern that advance directives should apply to inpatients not outpatients, section 1866(f) of the Act and implementing regulations at § 489.102 require that the hospital give each individual (1) written information concerning an individual's rights under State law to make decisions concerning medical care, including the right to accept or refuse medical or surgical treatment and the right to formulate, at the individual's option, advance directives, and (2) written policies of the provider or organization with respect to the implementation of advance directives. Section 1866(f)(2)(A) specifically notes that this information must be provided when an individual is admitted as an inpatient to a hospital; therefore, the hospital need not provide this information to those who are receiving outpatient services.

We appreciate the commenter's suggestion that the language about advance directives incorporate increased information about and access to palliative care for the terminally ill. However, neither the statute nor the existing regulations about advance directives discuss linking increased discussion of and access to palliative care with the advance directives requirement. Further, as noted earlier, the proposed rule did not contemplate amending the existing advance directives requirements. We do believe, however, that referencing the patient's right to formulate and have hospital staff comply with advance directives in the new Patients' Rights CoP will lead to increased communication regarding end-of-life decisions, pain management, and other palliative care.

Comment: One commenter believed that a hospital should be required to check and adhere to advance directives, including those pertaining to psychiatric emergencies, by incorporating the appropriate training to ensure patients are knowledgeably consenting and by including quality improvement efforts to study the issue.

Response: We believe that existing regulations at §§ 489.100, 489.102, and 489.104 already address these concerns. The final rule cross-references these citations and supports the existing regulatory expectation. However, the commenter touched upon a point that merits additional response: specifically, that advance directives are not limited to end-of-life decisions. In the mental health setting, a patient may form advance directives that relate to what should be done if he or she experiences a psychiatric crisis. In an advance directive, a person with a mental disorder leaves instructions as to his or her health care when he or she no longer has decision-making capacity. These instructions may include, for example, the name of the health care proxy, the name of the facility in which one wishes to receive services, the name of the provider from whom one wishes to receive treatment, names of medications and dosages that work best, and the methods to be used to de-escalate a crisis to avoid the use of seclusion and restraint. In the interpretive guidelines, we will further describe the aspect of advance directives that relates to psychiatric emergencies to place a greater emphasis on and encourage responsiveness to these situations.

E. Privacy and Safety

We Proposed That the Patient Has the Right to Privacy and To Receive Care in a Safe Setting

Comment: One commenter stated that language of the preamble that referred to the patient's respect, comfort, and dignity was not included in the regulations text.

Response: We believe that patient respect, dignity, and comfort are the foundation of the expectations outlined

by the regulation—freedom from all forms of abuse and harassment, the right to privacy, and the right to care provided in a safe setting. As we have noted earlier, these standards are intended to provide protection for the patient's physical and emotional health and safety. Respect, dignity, and comfort would be components of an emotionally safe environment. This point will be reinforced when we prepare corresponding interpretive guidelines to implement this final rule.

Comment: Commenters agreed with the concept of the patient's right to privacy but believed that the term ''privacy'' is broad and undefined. Some stated that ''personal privacy'' should be defined and a statement should be included to relieve hospitals of the responsibility of providing each patient with a private room, since ''privacy'' could be misinterpreted to mean that a patient has a right to a private room.

Response: We understand the commenters' concerns but are not including a description of ''privacy'' in the final rule. We intend to address the accommodation of privacy rights through the interpretive guidelines, as that venue permits a more thorough explanation of expectations.

We agree that ''privacy'' does not mean that each patient has a right to a private room. However, even if a patient is in a semiprivate room, the hospital should provide a patient with privacy by steps such as pulling curtains closed for exams and requesting visitors to leave the room when treatment issues are being discussed.

Comment: Some commenters believe ''personal privacy'' and ''receive care in a safe setting'' should not be combined since they are separate issues.

Response: We agree and have separated the two elements under the standard ''Privacy and Safety.''

F. We Proposed That the Patient Has the Right To Be Free From Verbal or Physical Abuse or Harassment

Comment: Some commenters wanted the word ''free'' to be replaced by ''protected'' and the phrase ''from hospital staff'' included in the standard. One commenter observed that patients can misinterpret hospital staff's helpful verbalizations as abusing and harassing. Commenters believed that this section should clarify that verbal warnings or physician contact with a patient, visitor, or employee, that are reasonably necessary to protect others from intimidation or threat of violence will not be construed as verbal or physical abuse. Other commenters wanted the regulation to express sensitivity to the fact that hospital personnel will not always be able to anticipate the potential for harassment and harm inflicted by another patient.

Response: While the patient is under the hospital's care and on its property, the hospital is responsible for ensuring the patient's health and safety and his or her physical, emotional, and psychological well-being. We recognize that there is always a chance a patient can misinterpret staff's intentions. We expect that hospital staff would intervene in a timely, appropriate manner to correct any misinterpretations in a timely, appropriate manner, if this situation were present.

In the final rule, we have amended the language to address all forms of abuse rather than just physical and verbal abuse. We recognize that any sort of abuse, including verbal, physical, psychological, sexual, and emotional, is unacceptable.

G. Confidentiality of Patient Records

We Proposed That the Patient Has the Right to Confidentiality of His or Her Clinical Records

Comment: A commenter stated that without specific language regarding privacy and confidentiality, research efforts may be stifled by the regulation.

Response: Presumably, the commenter is concerned that without a clear statement regarding the confidentiality of patient records, patients would be reluctant to participate in medical research if asked. We have maintained the proposed language regarding confidentiality; however, we agree with the commenter's assertion that patients need to have a clear understanding of how a hospital operationalizes this requirement. We will discuss this further in interpretive guidelines.

Comment: A commenter questioned whether the stated language is expressing a concern for each patient's ability to access his or her records or whether the language views a hospital's tendency to ''systemically'' frustrate individuals' legitimate attempts to gain access to medical records as a violation of the requirement.

Response: We believe it is each patient's inherent right to have access to his or her clinical record, as well as to have his or her clinical record kept confidential. We are setting forth this requirement in the final rule.

Comment: A few commenters noted that there was no definition provided for the term ''reasonable'' when it was used to describe the time frame within which the hospital must provide the patient with access to information in his or her records. They believed that this lack of specificity would make it difficult for JCAHO to determine hospitals' compliance with the standard. A few commenters believed that the regulation should state that the patient has a right to a copy of his or her records within 4 hours of an inpatient stay and within 48–72 hours for a patient who has been discharged. A few commenters believed that the regulations text should clearly account for the impact of variations in location of data, record complexity, urgency, and staff workload.

Response: Regarding the definition of ''reasonable,'' we believe that ''reasonable'' means that the hospital (1) will not frustrate the legitimate efforts of individuals to gain access to their own medical records, and (2) will actively seek to meet these requests as quickly as its recordkeeping system permits. We have included these expectations in the regulations text at § 482.13(d)(2).

We agree with the commenters who asserted that we should account for the impact of various factors such as location of data, urgency, and staff workload. Rather than attempting to stipulate time frames within the regulation that would cover all possible combinations of factors, we are simply retaining the word ''reasonable.'' We trust that if the patient believes that he is being subjected to unreasonable treatment as he tries to obtain a copy of his medical records, he will use the hospital's grievance process or will report difficulties to the SA or JCAHO. While setting a concrete time frame might provide a better measuring stick for performance, it would not adequately account for the kinds of variation that are apt to occur in different hospital settings.

Comment: Some commenters suggested that the rule be expanded to state, ''In accordance with local and State laws, the patient has a right to confidentiality of his or her clinical and personal information and records and a right to a copy of his or her medical record or information in his or her medical record within a reasonable time frame.''

Response: This comment could have several meanings. The idea of deferring to local and State law could apply to the confidentiality provision, the access requirement, the reasonable time frame, or all three. Specifically, it could be construed to mean that—

(1) ''The patient's right to the confidentiality of his or her record is governed by State or local law (rather than Federal law).'' Currently, DHHS's position on this point is to defer to State

rules that are more protective of privacy than Federal rules whenever possible.

While our intention is that the Patients' Rights CoP protects record confidentiality to the greatest extent possible, we recognize that some disclosure may be necessary. For example, in the December 1997 proposed rule, we proposed under the revised Information Management CoP that the patient's medical information must be available to all authorized professional personnel providing medical care to the patient. If the patient's care is to be well integrated and planned, those who are providing the various professional services involved in the patient's treatment may need to review the patient's medical status and history. It is expected that there will be management choices and policies determining what uses and disclosures of patient information are authorized, and that there will be administrative, management, and technical safeguards to ensure that only persons using records for authorized purposes may have access to them. For example, the release of the patient's record may occur if the patient is transferred to another facility, to comply with the provisions of Federal law and State law (where State law is not inconsistent with Federal law), when allowed under third party payment contract, as approved by the patient, and when inspection by authorized agents of the Secretary is required for the administration of the Medicare program.

(2) ''The patient's right to access his or her record should be governed by State and local law.'' A discussion of DHHS's position is in order. The general policy position of the DHHS on this topic is set out in ''Confidentiality of Individually-identifiable Health Information, Recommendations of the Secretary of Health and Human Services, pursuant to section 264 of the Health Insurance Portability and Accountability Act of 1996,'' in which the Secretary recommended Federal legislation to protect the rights of patients with respect to their health information.

The policy recommended there is that the patient should be allowed to inspect and copy health information about himself or herself held by providers and payers, but that providers and payers could, in their discretion, withhold information from the patient under very narrowly defined circumstances:

- The information is about another person (other than a health care provider) and the holder determines that patient inspection would cause sufficient harm to another individual to warrant withholding.
- Inspection could be reasonably likely to endanger the life or physical safety of the patient or anyone else.
- The information includes information obtained under a promise of confidentiality (from someone other than a health care provider), and inspection could reasonably reveal the source.
- The information is held by an oversight agency and access by the patient could be reasonably likely to impede an ongoing oversight or law enforcement activity.
- The information is collected in the course of a clinical trial, the trial is in progress, an institutional review board has approved the denial of access, and the patient has agreed to the denial of access when consenting to participate.
- The information is compiled principally in anticipation of, or for use in, a legal proceeding.

DHHS's policy also provides that those holding these health care records be permitted to deny inspection if the information is used solely for internal management purposes and is not used in treating the patient or making any administrative determination about the patient, or if it duplicates information available for inspection by the patient.

The DHHS's policy sets forth the expectation that in general, patients should be able to see and copy their records, and that recordholders should only be able to deny access to the portion of the record that meets the aforementioned criteria. The recordholder should redact the portions allowed to be denied and should give the patient the rest of the information. The accompanying discussion of DHHS's policy recommendations supports patient access to his or her own records. At least 31 States explicitly provide this right by law.

While we acknowledge the provider's right to exercise judgment in the release of a patient's record in these narrow instances, we firmly believe that a patient cannot take an active, meaningful role in his or her health care decisions if he or she is not allowed to know what is happening to his or her own body or mind. If he or she cannot comprehend that information, then it should be available to his or her representative (as allowed under State law), who then acts on his or her behalf. The patient's right to be informed of his treatment, his health status, and his prognosis is just that—his inherent right, to be exercised by the individual or at his or his representative's (as allowed under State law) discretion. We believe that this right is best supported by giving the patient access to his or her own record in all but the most extreme cases.

(3) ''The patient will receive his or her medical records within the time frame prescribed by State or local law.'' We would defer to either State or local guidance on this point.

The criteria we have set out above, that would describe circumstances that might limit access by patients to their hospital medical records, are not being incorporated into this final rule. Rather, we are raising them now as examples of the narrow areas in which providers should exercise discretion. Once we have reviewed the comments, we will consider whether further guidance is necessary.

Comment: One commenter stated the regulation should require records to be supplied at a fair market rate.

Response: Pricing must not create a barrier to the individual receiving his or her medical records. Records should be supplied at a cost not to exceed the community standard. If State law establishes a rate for the provision of records, State law should be followed. However, in the absence of State law, the rate charged by organizations such as the local library, post office, or a local commercial copy center that would be selected by a prudent buyer can be used as a comparative standard.

We are finalizing the requirement as proposed and believe that charging excessive fees for copies of a patient's medical record would constitute a violation of the Patients' Rights CoP as this practice could be used to frustrate the legitimate efforts of individuals to gain access to their own medical records. We expect that we would receive and investigate complaints if hospitals charged excessive fees for medical records.

Comment: Some commenters stated that consideration should be given to risk management issues involved in the release of incomplete medical records.

Response: We are unsure whether the commenter is referring to a closed record that may be incomplete or to a request for a copy of a current, open record that, until the patient is discharged, will be incomplete. In either situation, we believe it is a patient's inherent right to have access to his or her clinical record. A hospital may decide to provide a staff member to review the record with the patient as necessary to minimize misunderstandings and respond to concerns.

H. Seclusion and Restraint

(1) We Received Approximately 150 Comments Regarding the Proposal That Patients Have the Right To Be Free From the Use of Seclusion or Restraint, of Any Form, as a Means of Coercion, Convenience, or Retaliation by Staff

Comment: None of the commenters voiced an objection to the addition of this standard under Patients' Rights.

Response: Since we proposed the rule in 1997, interest in the use of seclusion and restraint and its consequences has increased markedly. Part of this heightened awareness is due to media attention devoted to this topic. One of the most controversial series of newspaper reports appeared in October 1998 in Connecticut's *Hartford Courant*. The articles cited the results of a study that identified 142 deaths from seclusion and restraint use in behavioral health treatment facilities, including psychiatric hospitals and psychiatric treatment units in general hospitals, over the past 10 years. Restraint use has also been covered in the broadcast media and has been investigated by the General Accounting Office. All of this attention has generated a great deal of concern for patient safety and well-being within the public, private, and regulatory sectors.

While we find the reports of deaths associated with restraint use disturbing, we are equally concerned with the impact that restraint use has on acute and long-term care patients. The prevalence of injuries and accidents involving restraint is difficult to gauge. If manufacturers learn of a death or serious injury caused by a medical device, they must report it to the Food and Drug Administration (FDA). Device user facilities (hospitals, nursing homes, outpatient treatment facilities, outpatient diagnostic facilities) must report a death of one of their patients caused by the medical device to FDA and the manufacturer, and a serious injury to the manufacturer only. No other entities are required to report to FDA or the manufacturer.

Research indicates that the potential for injury or harm with the use of restraint is a reality. In a 1989 article published in the Journal of the American Geriatrics Society, Evans and Strumpf pointed to an association between the use of physical restraint and death during hospitalization (Evans, LK and Strumpf, NE: Tying down the elderly: A review of the literature on physical restraint. J Am Geriatr Soc (1989) 37:65–74; also see Robbins, LJ, Boyko E, Lane, J, et al.: Binding the elderly: A prospective study of the use of mechanical restraint in an acute care hospital. J Am Geriatr Soc (1987) 35:290; Frengley, JD and Mion, LC: Incidence of physical restraints on acute general medical wards. J Am Geriatr Soc (1986) 34:565; Strumpf, NE and Evans, LK: Physical restraint of the hospitalized elderly: Perceptions of patients and nurses. Nursing Research (1998) 37:132.) The FDA estimates that at least 100 deaths from the improper use of restraints may occur annually. Mion et al. further noted that, ''Some evidence exists that the use of physical restraints is not a benign practice and is associated with adverse effects, such as longer length of hospitalization, higher mortality rates, higher rates of complications, and negative patient reactions. Physical restraints have a detrimental effect on the psychosocial well-being of the patient'' (see Mion et al.: A further exploration of the use of physical restraints in hospitalized patients. Jour Am Geriatr Soc (1989) 37:955; Schafer, A: Restraints and the elderly: When safety and autonomy conflict. Can Med Assoc J (1985) 132:1257–1260).

Research findings on the impact of restraints use have lead to research on and development of alternative methods for handling the behaviors and symptoms that historically prompted the application of restraint. However, various studies provide evidence that restraint is still being used when alternate solutions are available (see Donat, DC: Impact of a mandatory behavior consultation on seclusion/restraint utilization in psychiatric hospitals. J Behav Ther Exp Psychiatry (1998 March) 29:1, 13–9; Dunbar, J: Making restraint-free care work. Provider (1997 May) 75–76, 79; and Moss, RJ: Ethics of mechanical restraints. Hasting Center Report (1991 Jan-Feb) 21(1):22–25.)

While we acknowledge that in some emergency situations the use of restraint may be the least potentially harmful way to protect the individual's safety or that of others, the patient's right to be free from restraint is paramount. Restraint use should be the exception to the rule, not a standard practice. The question that arises is how we and the medical community, with the common goal of the well-being of each patient, can eliminate the inappropriate use of restraint and can ensure the safety and health of the patient in emergency situations where a restraint is applied. In considering how to achieve these goals, we refer to the article by Evans and Strumpf:

''* * * the consideration of the anticipated length of time in restraint, goals of care, and the likely outcome for the patient become extremely important questions to answer in those instances where restraints are contemplated or in use * * * Further, more attention to staff education regarding selection of appropriate restraints by type and size and their proper application and monitoring seems to be warranted if restraint-related accidental injuries and deaths are to be avoided.'' (J Am Geriatr Soc (1989) 37:70).

In its Safety Alert of July 15, 1992, the FDA echoed the need for training to decrease the incidence of deaths and injuries involving restraining devices. The FDA suggested that institutions provide in-service training for staff as regularly as possible, including a demonstration of proper application of restraint. Given the stated need for training if accidental injuries and deaths are to be avoided and the use of alternative measures promoted, we have added language to the final rule that will require a training program on restraint for staff. We have also noted that these training programs should review alternatives to restraint and seclusion, to teach skills so that staff who have direct patient contact are well equipped to handle behaviors and symptoms as much as possible without the use of restraints or seclusion.

In the final rule, we have added the word ''discipline'' to the standard statement to read, ''The patient has the right to be free from the use of seclusion or restraint, of any form, as a means of coercion, discipline, convenience, or retaliation by staff.'' Discipline is not an acceptable reason for secluding or restraining a patient. In the treatment environment, it is impossible to distinguish between ''discipline'' and ''punishment.''

Another addition to the final rule are definitions of ''physical restraint,'' ''drug that is used as a restraint,'' and ''seclusion.'' We believe that codifying the definitions of these terms will provide a clear legal basis for the enforcement of these standards.

We have decided upon a division of the restraint and seclusion standard in the final rule. As we began work on the final rule, we discovered a pattern of differences between an intervention used in the provision of acute medical and surgical care and one used to manage behavioral symptoms. This difference was situation-specific rather than necessarily linked to provider type. While the definition of ''restraint'' spans care settings, the circumstances and expected outcomes for restraints use vary.

In the final rule, we have attempted to differentiate between situations where a restraint is being used to provide acute-level medical and surgical care and those where restraint or seclusion is used to manage behavior.

This approach is similar to that adopted in existing standards that JCAHO has created for restraint and seclusion. When a restraint is applied in the course of acute medical and surgical care, the intervention is generally not undertaken because of an unanticipated outburst of severely aggressive or destructive behavior that poses an imminent danger to the patient and others. In medical and surgical care, a restraint may be necessary to ensure that an intravenous (IV) or feeding tube will not be removed, or that a patient who is temporarily or permanently mentally incapacitated will not reinjure him or herself by moving after surgery has been completed. Using a device such as an IV arm board to provide medication that, if skipped, would cause the patient considerable injury or harm may be the least restrictive intervention that accomplishes the necessary administration of the medication. The use of a restraint in this circumstance is necessary for the patient's well-being (to receive effective treatment) when less restrictive interventions, such as keeping the patient's arm free and mobile have been determined to be ineffective.

Depending on the patient's diagnosis and health status, whether the acute medical and surgical care patient requires constant monitoring while restrained or can be monitored and reassessed at regular intervals is a matter of clinical judgment. Additionally, seclusion is not an intervention selected to help with the provision of medical or surgical services; therefore, references to seclusion have been removed from the final standard that appears as subsection (e).

A critical point to remember is that these standards are not specific to the treatment setting, but to the situation the restraint is being used to address. For example, if a hospital has a wing for psychiatric patients where it uses restraint or seclusion to manage behavior, it must meet the restraint and seclusion behavior management standard for those patients.

The use of restraints or seclusion to manage behavior is an emergency measure that should be reserved for those occasions when an unanticipated, severely aggressive or destructive behavior places the patient or others in imminent danger. While different factors may precipitate this type of psychiatric, behavioral, and physical outburst for an individual patient, the need for rapid assessment and continuous monitoring is applicable in each case.

Accordingly, we are accepting commenters' suggestions to regulate the time frames within which certain actions must occur in the behavior management scenario. We are adopting the concept of time-limited orders that appears in JCAHO's 1999 Hospital Accreditation Standards. Specifically, the intent statement for standard TX.7.1.3.1.8 provides that written orders for restraint or seclusion for behavioral health patients are limited to 4 hours for adults, 2 hours for children and adolescents ages 9 to 17, or 1 hour for patients under age 9. These time frames were created for JCAHO's use by a committee of experts in the field. We stress, however, that these time frames represent the maximum time intervals for which each order can be written. Physicians or licensed independent practitioners may write orders for shorter increments of time. A licensed independent practitioner is any individual permitted by law and by the hospital to provide care and services, without direction or supervision, within the scope of the individual's license and consistent with individually granted clinical privileges. Additionally, under regulation, while the patient is being restrained or secluded, his or her status must be continually monitored, assessed, and reevaluated, with an eye toward releasing him or her from the restraint or seclusion at the earliest possible time. We believe that these factors will ensure that the patient is restrained or secluded for as brief a time as possible. In addition, we are requiring that if the restraint or seclusion order is written by a physician or licensed independent practitioner other than the ''treating'' physician, the treating physician must be consulted as soon as possible The ''treating'' physician is the physician who is responsible for the management and care of the patient. We believe that this is important because the ''treating'' physician may have information regarding the patient's history which may have a significant impact on the selection of restraint or seclusion as an intervention. For example, the patient may have a history of sexual abuse and restraints or seclusion may actually cause psychological harm.

JCAHO also states in its explanation of intent for standard TX.7.1.3.1.7 that each licensed independent practitioner best carries out his or her responsibility when he or she participates in daily reviews of restraints and seclusion use related to his or her patients. We are adopting a parallel philosophy by specifying in the regulation that an order for restraint or seclusion may only be renewed in the previously mentioned increments (4 hours for adults; 2 hours for patients ages 9 to 17; 1 hour for patients under 9) for up to a total of 24 hours—to that point, the practitioner must reevaluate his or her patient face-to-face before writing a new order. We believe that it is appropriate to recognize JCAHO's work in this area and maintain consistency between Federal and accreditation standards when possible.

In situations where a restraint must be used for behavior management, increased vigilance is required because of the heightened potential for harm or injury as the patient struggles or resists. Furthermore, there is an immediate need for assessment of what has triggered this behavior and for continuous monitoring of the patient's condition. To address the need for quick assessment of the condition, we are specifying that the physician or licensed independent practitioner see the patient face-to-face within 1 hour of the application of the restraint or the use of seclusion.

The standard for restraint use in the provision of acute medical and surgical services and the standard for restraints and seclusion use for behavior management are built on the same foundation; however, the behavior management standard contains more rigorous requirements for the timeliness of actions that must be taken by a physician or other licensed independent practitioner who is granted authority under State law and by the hospital to order restraints use or seclusion. The creation of two restraints standards does not represent any lessening in our commitment to restraint reduction and, as much as possible, elimination in both the provision of acute care and behavior management situations. The distinction does acknowledge, however, that it may not be reasonable to have identical standards for two very different situations. The absence of time frames for the acute care standard should not be construed as permission to restrain patients without timely interaction with the physician or other licensed independent practitioner who is permitted by the State and the hospital to order restraint. When restraint is used to provide acute medical or surgical care, we still expect the patient to be continually assessed, monitored, and reevaluated by hospital staff. The patient's care needs will dictate how frequently reassessment by a physician or other licensed independent practitioner is necessary. In any case, we expect the discontinuation of the restraint at the earliest possible time.

(2) We Proposed That if Seclusion and Restraints Are Used (Including Drugs Used as Restraints), They Must be Used in Accordance With the Patient's Plan of Care, Used Only as a Last Resort, in the Least Restrictive Manner Possible, and Removed or Ended at the Earliest Possible Time

Comment: One commenter suggested that there needs to be better understanding of why seclusion and restraints are used, and development of efforts to reduce their use. However, this commenter did not believe further prescriptive Federal regulation is necessary.

Response: There is a need to understand why seclusions and restraints are used; however, the reasons behind the use of restraints have been studied and to some extent documented (see Strumpf NE and Evans, LK: Physical restraint of the hospitalized elderly: Perceptions of patients and nurses. Nursing Research (1988) 37:132–137; Evans LK and Strumpf NE: Tying down the elderly: A review of the literature on physical restraint. Jour Amer Geriatr Soc (1989) 37:65–74; Janelli, LM: Physical restraint use in acute care settings. J Nurs Care Qual (1995 Apr) 9(3) 86–92.) Various studies substantiate that restraints are being used when alternate solutions are available (see Donat, DC: Impact of a mandatory behavior consultation on seclusion/restraint utilization in psychiatric hospitals. J Behav Ther Exp Psychiatry (1998 March) 29:1, 13–9; Dunbar, J: Making restraint-free care work. Provider (1997 May) 75–76, 79; and Moss, RJ: Ethics of mechanical restraints. Hasting Center Report (1991 Jan–Feb) 21(1):22–25.)

While restraints reduction and education programs are underway and should be encouraged, we believe that it is critical to reinforce appropriate restraints reduction by acknowledging the patient's right to be free from restraints except when the use of a restraint is the least restrictive option that will provide the greatest benefit to the patient (that is, the risks associated with the use of the restraint are outweighed by the risk of not using it). When used to manage behavior, the use of restraint or seclusion is only an emergency measure and requires careful assessment and monitoring to ensure patient safety.

Comment: Some commenters suggested that this regulation display consistency between HCFA and JCAHO requirements.

Response: We understand and appreciate concerns about consistency between HCFA and JCAHO standards. As mentioned above, we have modified the final rule to introduce separate standards to address restraint or seclusion used for behavior management and restraint used in the provision of acute medical and surgical care. This change reflects the differing emphases contained within JCAHO's current requirements. As we further develop the guidelines, we will continue to work closely with JCAHO.

Comment: A number of commenters suggested that the terms ''as a last resort'' should be replaced with, ''when medically indicated,'' or, ''when medically necessary,'' or ''when other appropriate measures have been found to be ineffective.''

Response: We have replaced the term, ''as a last resort'' with ''when other less restrictive measures have been found to be ineffective.'' We reaffirm that restraints use should not be a standard practice, and restraints should be used only when other less restrictive alternatives are ineffective to protect the safety of the patient or others.

Comment: A few comments suggested including ''and hospital policy'' after ''patient's plan of care'' to link patient care to the hospital requirements.

Response: To meet the restraint and seclusion requirements, hospitals may develop their own policies focusing on alternatives to seclusion and restraint, the underlying patient condition, and the discontinuation of seclusion or restraint as soon as possible. However, it seems redundant to require hospitals to then follow their own policies. Our primary concern is that the requirements of the regulation be met. Ensuring the connection between the regulations and standards of practice and smooth implementation is part of the hospital's responsibility to meet the CoPs. Accordingly, we are not adopting the commenter's suggestion.

Comment: One commenter suggested that less restrictive and more restrictive devices should be held to different standards.

Response: We do not want to apply unnecessary multiple standards when the overarching principle is that the patient has the right to be free from restraints, whether artificially or scientifically classed, that restrict normal movement or access to his or her body. We recognize the difference between an arm restraint applied to enable the provision of needed medication versus a posey vest or four point restraint; however, when their use is avoidable, we expect that the hospital will refrain from using any of these devices. When this intervention is absolutely necessary to the safety and well-being of the patient or others, the hospital does have the ability to use these devices.

We expect hospital policies and procedures regarding all use of restraints or seclusion to comply with the same fundamental standard: At the very least and before all else, the intervention should do no harm. Any intervention must be made in the context of an ongoing loop of assessment, intervention, evaluation, and reintervention. A corollary principle is that the greater the risks associated with an intervention, the more careful and thorough the assessment must be.

Comment: Seclusion and restraint should never be used simultaneously and should not cause physical pain to the patient.

Response: We are strengthening the final rule by specifying that physical restraints may not be used in combination with seclusion unless the patient is either (1) continually monitored face-to-face by an assigned staff member; or (2) is continually monitored by staff using both video and audio equipment. This monitoring must be in close proximity to the patient.

We agree that the use of a restraint should not harm or cause pain to the patient. We will address this topic in the interpretive guidelines. We believe that these concepts should be covered as part of the staff training in the proper use of seclusion and restraint.

A slightly different issue is the use of a drug as a restraint in combination with a physical restraint or seclusion. As acknowledged elsewhere in this preamble, drugs may be used for a variety of purposes and may have positive value as part of a well-planned therapeutic strategy. Some are appropriate given the individual's plan of care and specific situation. The regulation supports the patient's right to be free from drugs that are used to restrain the resident in the absence of medical symptoms or for the purpose of discipline, convenience, retaliation, or coercion; however, we do not wish to introduce regulations that might block the strides made to appropriately medicate patients who are, for example, in pain or clinically depressed.

Comment: A few commenters suggested that the requirement for patient records include alternative approaches attempted before the use of seclusion and restraints.

Response: Documentation included in the patient's medical record was discussed in the proposed rule of December 1997 at proposed § 482.120(a), the Information Management CoP. The proposed Information Management CoP requires

recording the diagnosis, comprehensive assessment and plan of care, evaluations, consent forms, notes on treatments, nursing, medications, reactions, a summary report with provisions for follow-up care, and any relevant reports. The CoP also requires that revisions to the plan of care be documented in the patient's record. Accordingly, as the general requirements are addressed in another section that will be addressed in the hospital CoP rule when it is published as final, we are not adopting the commenter's suggestion. However, we expect that the medical record will contain information on less restrictive measures that may have been considered before the selection of seclusion or restraint use. In the interpretive guidelines, however, we will go into further detail about the expectation surrounding the requirement that restraint or seclusion only be used after less restrictive interventions are shown to be ineffective. The interpretive guidance will describe what surveyors should look for in examining compliance with this standard.

Comment: Data showing the use of seclusion and restraints and any patient injuries incurred as a result should be reported.

Response: It is possible that States and localities may have requirements for reporting these incidents. Additionally, Federal law requires that deaths involving restraining devices be reported to the FDA, and that both deaths and serious injuries associated with restraint use be reported to the device's manufacturer. However, this reporting does not cover the situations where patients are suffocated or critically injured during physical holds. To be more inclusive, we are adding a § 482.13(f)(7) (under the behavior management standard) that requires each hospital to report to us any death that occurs while a patient is restrained or in seclusion, or where it is reasonable to assume that a patient's death is as result of restraint or seclusion. HCFA will track the reports of deaths from restraints or seclusion occurring in hospitals. HCFA will use this information to (1) authorize onsite investigations (complaint surveys) of these hospitals in accordance with the current complaint investigation process; and (2) inform the Federally-mandated Protection and Advocacy (P&A) entity in the respective State or territory. Protection and Advocacy programs are Congressionally authorized (in accordance with 42 U.S.C. 10101 *et.seq.*) to access facilities and to investigate abuse and neglect complaints. Furthermore, we are soliciting comment on the pros and the cons of requiring the reporting of serious injury or abuse related to the use of restraints or seclusion, as well as the type of injury or abuse that would be reported, and the process whereby these incidents would be reported.

Comment: Some commenters suggested the need for hospitals to develop and implement hospital-based performance and outcome measures for restraints and seclusion.

Response: We are not mandating the development of these standards at this time. However, we expect that a hospital, as part of its internal quality assessment and performance improvement program, will evaluate itself in patient care activities that have potential safety issues, including the use of restraints and seclusion.

Comment: Commenters stated the need to provide periodic educational sessions for hospital staff on the proper use of seclusion and restraint in compliance with HCFA guidelines.

Response: We agree. We are adding a requirement that as part of ongoing training, staff who have direct patient contact are trained in the proper and safe use of seclusion and restraints, as well as trained in techniques and alternatives to handle the symptoms, behaviors, and situations that have historically prompted restraint or seclusion. For example, topics of training could include cardiopulmonary resuscitation techniques, methods for appropriately positioning a restrained patient's head and body to ensure proper respiration and circulation, or methods for monitoring cardiovascular status. We will provide a more detailed description of safe, appropriate restraining techniques in the interpretive guidelines.

Research on restraints supports education as the key component in decreasing or eliminating the use of seclusion or restraints (see Stilwell, EM: Nurses' education related to use of restraints. (1991 Feb) 17(2) 23–6; Cruz, V: Research-based practice: Reducing restraints in acute care setting. (1997 Feb) 23(2)31–40; and Janelli, LM: Acute/critical care nurses' knowledge of physical restraints-implications for staff development. (1994 Jan–Feb) 10(1)6–11). As noted earlier, education may also be crucial in efforts to reducing and eliminating restraints-related injuries.

Comment: A commenter requested further clarification of the definition of ''restraint,'' the types of restraints, and the types of situations where these measures should be used. Commenters wanted HCFA and the medical community to collaborate in developing these working definitions, giving consideration to differences in patient care issues that are age and population specific in acute care hospitals, behavioral health treatment facilities, and nursing homes. These commenters requested inclusion and clarification of when the use of side rails constitutes a restraint and a discussion of leather versus soft restraints.

Response: We have provided definitions of ''physical restraint,'' ''drug that is used as a restraint,'' and ''seclusion'' in the final rule and plan to provide further guidance in the interpretive guidelines in the SOM. To adequately respond to commenters' questions, we will respond in three parts.

1. Physical Restraint

The functional definition of ''physical restraint'' parallels existing guidance regarding restraints found in HCFA's SOM Appendix P (nursing home requirements). A restraint is a restraint regardless of setting. A posey vest is no less restrictive when applied in a hospital than when used in a nursing home.

Similarly, we are not categorizing varieties of physical restraints, such as soft versus leather. An object is a restraint by functional definition; that is, when it restricts the patient's movement and access to his or her body. Under this definition, all sorts of devices and practices could constitute a restraint. For example, tucking a patient's sheets in so tightly that he or she cannot move is restraining him or her. In that instance, a sheet is a restraint. One has to examine how the device or object is being used. Putting up side rails that inhibit the patient's ability to get out of bed when he or she wants to constitutes a restraint. In summary, we have adopted a functional definition that does not name each device and situation that can be used to inhibit an individual's movement simply because we believe that this approach is counterproductive. One could not possibly capture all scenarios or devices in regulation, and a functional approach promotes looking at individual situations. From our experience with nursing homes, we know that many people look for a clear-cut list of restraints. We believe that clinicians will agree, however, that each case is different. A device that acts as a restraint for one individual may not inhibit the movement of another. Accordingly, we have incorporated a definition that focuses on function for the individual.

Concerning leather and soft restraints, patient safety and comfort are primary

considerations in selecting a restraining technique or device. We do not feel qualified to comment on one being preferable to the other, but would offer that restraints in general should be avoided as much as possible.

2. Drug Used as a Restraint

We have noted in the regulations text at § 482.13(e)(1) and § 482.13(f)(1) that a drug used as a restraint is a medication used to control behavior or to restrict the patient's freedom of movement and is not a standard treatment for the patient's medical or psychiatric condition. Before discussing the concepts behind this definition, we would point out that the language that precedes this definition clearly sets forth that the patient has the right to be free from seclusion or restraint, of any form, imposed as a means of coercion, discipline, convenience, or retaliation by staff. This right is provided under both the acute medical and surgical care provisions and the behavior management provisions.

Even when there are medical indications for the use of a drug as a restraint, we believe that the precautions outlined in the regulation are necessary to protect the patient. The definition contains a phrase that merits some discussion—''and is not a standard treatment for the patient's medical or psychiatric condition.'' As stated elsewhere, we do not want to unintentionally interfere with the administration of drugs that are part of a patient's therapeutic plan of care—for example, for a patient with a psychiatric diagnosis, a mood or behavior-affecting drug may be part of the patient's overall care plan. To address this consideration, we added language to address what we see as the primary point the standard hopes to address—not the drug that is being used as an integrated part of the care plan, but the drug that is not part of a standard treatment for the patient's medical or psychiatric condition.

3. Seclusion

The definition adopted, ''the involuntary confinement of a person in a room or an area where the person is physically prevented from leaving,'' is an adaptation of JCAHO's definition.

Comment: We proposed a more prescriptive set of requirements for restraints and seclusion in the preamble to the proposed rule. Many commenters cited a potential burden, inefficiency of care, expense, and safety issues that may arise as a direct result of mandating physician consultation to evaluate for restraint utilization, to write orders every 2 hours for pediatric patients or every 6 hours for adult patients (instead of every 24 hours), to have face-to-face contact, and to have primary authority to initiate written orders for seclusion and restraints. A commenter pointed out that the proposed rule will exceed the current law in his State. In that State, seclusion and restraint orders may be issued by either a physician, Ph.D., licensed clinical psychologist, or master's prepared registered nurse. One commenter believed that frequency of assessment should be based on the patient's presenting factors. Many commenters believed the proposed rule would be restrictive and impractical, thereby encouraging false documentation and limiting the ability of the registered nurse in ''sound clinical decision making.''

Response: We acknowledge the perceived burden of a more prescriptive set of standards. As we explained above, in this rule we have attempted to differentiate between situations where a restraint is being used to provide acute-level medical and surgical care and those when restraint or seclusion is used to manage behavior.

To address the concerns about the burden of requiring all of these functions to be performed by the physician, as well as the comment that some States permit other licensed independent practitioners to order restraint and seclusion, we have changed the final regulation to indicate the possible involvement of these other types of professionals as permitted by State law and hospital policy. However, we are interested in receiving comments on whether we should adopt more restrictive requirements that would allow only physicians to order restraints or seclusion for behavior management.

We considered the other commenters' concerns about the restrictiveness and impracticality of the requirements, the adverse effect that the requirements might have on the RN's ability to make sound clinical judgments, and the potential for falsification of records. We disagree with these comments on several counts. First, the RN's decision-making skills and judgment are a cornerstone of good patient care. This rule is not curtailing the RN's role in patient care. Second, the standard for restraint use for acute medical and surgical care maintains flexibility. We have avoided being overly prescriptive in this standard because of the need for sound clinical judgment in meeting the patient's individual care needs. In the provision of acute medical and surgical care, we agree with the commenter who observed that patient assessment should be based on his or her presenting condition. (Earlier, we described the rationale for codifying a greater degree of specificity for the standard for restraint and seclusion in behavior management.) Regardless of the situation that is presented to the hospital, the nurse's observation and intervention in patient care remains critical. Concerning the falsification of records, we see no connection between the requirements we are establishing in this rule and an increase in the behavior.

Comment: A commenter wanted to prohibit PRN orders and mandate 15-minute checks on restrained patients. Some responders believed that there should not be a defined time limit for restraint use, while a few believed that this limit should be instituted. One commenter believed that patients under age 18 should be in seclusion or restraint for shorter periods than adults. One responder suggested a maximum of 16 hours.

Response: We agree that PRN orders should never be used with or as a part of seclusion and restraints, and this concept has been added to the final rule. The use of PRN orders for seclusion and restraints would allow a facility to indiscriminately seclude or restrain patients. As noted earlier, in the acute medical and surgical care standard, the need for monitoring continually versus periodic checks is a determination that will largely be correlated with the individual patient's diagnosis, treatment, and health status. Basically, the determination of frequency of monitoring must be made on an individual basis. However, we are mandating that restraints or seclusion be ended at the earliest possible time based on *continuous* assessment and reevaluation of the patient's condition. We expect that this assessment would include items such as vital signs, circulation, hydration needs, level of distress, and agitation. In interpretive guidance, we will specify what is meant by ''continuous assessment and reevaluation of the patient.''

In response to the commenter who believed in differentiating between the length of restraint for adults and patients under the age of 18, we have adopted JCAHO's approach to time-limited orders for restraints or seclusion. Concerning the comment that restraint should be limited to 16 hours, we understand the desire to put some sort of a cap on the amount of time that an individual can be restrained. However, we found no precedent for a 16-hour or any other time-specific cap, and we believe that it is clinically ill-advised to set an absolute maximum on how long an individual can be restrained. As discussed earlier, we have indicated that orders for physical

restraint and seclusion may be renewed in the previously mentioned increments for up to a total of 24 hours. At that point, the physician or licensed independent practitioner who ordered the use of restraints or seclusion must see his or her patient in person to determine whether the issuance of a new order is appropriate. The requirement that patients who are restrained for behavioral purposes are continually assessed, monitored, and reevaluated, combined with the regulatory expectation that restraints use will be discontinued at the earliest possible time, should ensure that restrained patients are released as soon as they can commit to safety and no longer pose a threat to themselves or others.

While the regulation stresses the minimal use of restraint or seclusion, when these steps are necessary, the staff's training should provide a good groundwork for ensuring that staff know how to meet each patient's basic needs. As a result of their training, staff should be equipped to assess, monitor, and reevaluate each restrained patient as well as provide care to meet basic needs.

Comment: Suggestions were made that nurses should be allowed (1) to receive verbal or telephone orders from physicians who are prescribing restraint or seclusion orders and (2) to use ongoing assessment and a standardized restraint protocol.

Response: Current requirements at § 482.23(c)(2)(i) allow nurses to receive verbal or telephone orders. In addition, many States have laws regarding telephone orders. We agree that professional staff should be able to use standard seclusion or restraint protocols, in accordance with medical standards of practice and hospital policies and procedures that are consistent with these regulations. If a hospital and medical staff develop and authorize the use of this protocol for emergency situations, it would meet the requirement that restraints be used in accordance with the order of a physician or other licensed independent practitioner who is approved by the State and the hospital to issue this order. We will explain this further in interpretive guidelines. We expect that the nurse or other professional who initiates the protocol will contact the appropriate physician at the earliest possible time to obtain a verbal order for the restraint or seclusion intervention.

Comment: Provisions need to be made for the emergency application of restraints.

Response: We agree. Hospitals may develop an emergency protocol approved by the medical staff to be used in emergency situations in a manner consistent with these regulations.

Comment: Commenters stated that we are singling out the use of psychopharmacological drugs in the overall proposed rule. One commenter asked that references to psychopharmacological drugs be removed from the CoP.

Response: We agree that there is no need to specify ''psychopharmacological'' drugs and have removed the term. Any drug that alters mood, mental status, or behavior can be used as a restraint depending on the situation.

Comment: Many comments centered around linking the valid use of restraints (including drugs used as restraints) to the patient's plan of care and the hospital's policy.

Response: The use of restraints must be linked to the patient's modified plan of care, and we have put this language in the regulation. We refer to the ''modified'' plan of care to reinforce our expectation that restraint or seclusion should not be a standard response to a particular behavior or situation. The use of these interventions is an emergency measure that temporarily protects the safety of the patient and others; however, it is not a long-term solution for handling problematic behavior.

If restraints are used, their use must be in accordance with a physician's order (or other licensed independent practitioner's order, as noted earlier) and the patient's modified plan of care; used in the least restrictive manner possible; used in accordance with appropriate restraining techniques; use only when other appropriate measures have been found to be ineffective to protect the patient or others from harm; and ended at the earliest possible time. The patient's treating physician must be consulted as soon as possible, if the treating physician did not order the restraint. In addition, the condition of the restrained patient must be continually assessed, monitored, and reevaluated.

Comment: A commenter believed that no further details need to be included in the regulation as it only increases the paperwork burden for the hospital while not guaranteeing improved quality of patient care.

Response: We have adopted more prescriptive requirements based on recent public health concerns, as noted above. The paperwork aspect of both the acute medical and surgical restraint use and the behavior management restraints and seclusion are minimal. As other factors, such as the professionalism and training of staff, will affect patient outcomes, we agree that a detailed process does not necessarily in and of itself guarantee quality of care. However, we believe that we have established a framework in regulations that promotes the patient's right to be free of restraints and seclusion and protects him or her when their use is instituted.

Comment: One commenter asserted that particularly in psychiatric institutions, restraints and seclusion can be used to prevent patients from filing complaints or taking steps to initiate discharge. The commenter further noted that even those patients who are not in seclusion may effectively be prevented from using the phone to notify family or a primary physician of their hospitalization by an unscrupulous provider. To address this situation, the commenter recommended that we include the patient's right to request that a family member of his or her choice and his or her physician be notified promptly of his or her admission to the hospital.

Response: In the final rule, we have added a requirement that addresses this right.

General Comments

Comment: Recommendations were made for us to provide more guidance on the specific documentation hospitals are required to provide to surveyors to indicate compliance and, ultimately, for us to be aware of how these regulations may impact patient safety.

Response: We intend to issue interpretive guidance that will elaborate on the hospital's responsibilities, what the surveyors should evaluate to determine compliance with this requirement, and the extent to which the use of seclusion or restraints in each individual instance provides demonstrable evidence that the intervention is clearly tied to the individual patient's plan of care. Through our on-site survey presence in initial certification surveys, recertification surveys and the investigation of complaints, HCFA will monitor how well hospitals are meeting these new standards.

Comment: A commenter suggested the use of measurement and assessment processes that would identify opportunities to reduce the risk associated with restraint use through introducing preventive strategies, innovative alternatives, and process improvement.

Response: We think this is an excellent suggestion; however, we are not mandating specific measures or assessment protocols. We expect a hospital, through its quality assessment

and performance improvement activities, to assess itself in this regard.

Comment: A commenter suggested including the right to nondiscriminatory treatment—which should include a prohibition against discrimination on the basis of mental or physical disability and socioeconomic status.

Response: As a result of their receipt of Federal funds, Medicaid-and Medicare-participating hospitals are already prohibited from discriminating on the basis of race, color, or national origin (under title VI of the Civil Rights Act of 1964), age (under the Age Discrimination Act of 1975), and disability (under section 504 of the Rehabilitation Act of 1973). In addition, the Americans with Disabilities Act protects persons with disabilities from discrimination.

The regulations governing the Medicare provider agreement recognize these protections and discuss them at § 489.10(b). Specifically, this section, entitled ''Basic requirements,'' requires the provider to meet the applicable civil rights requirements of title VI of the Civil Rights Act of 1964, as implemented by 45 CFR part 80, which provides that no person in the United States shall, on the ground of race, color, or national origin, be excluded from participation in, be denied the benefits of, or be subject to discrimination under any program or activity receiving Federal financial assistance. Section 489.10(b) also requires compliance with section 504 of the Rehabilitation Act of 1973 (which provides protection against discrimination to qualified persons with disabilities), the Age Discrimination Act of 1975 (which provides protection against discrimination based on age), and other pertinent requirements of the Office for Civil Rights of the Department of Health and Human Services. Moreover, if a facility is funded under title VI or title XVI of the Public Health Service Act, it is prohibited from denying services to persons unable to pay for needed services if the persons are seeking emergency services and reside in the hospital service area or if those persons are eligible under the uncompensated services provision of the Act. The facility is also prohibited from discriminating based on method of payment.

V. Provisions of the Final Rule

For reasons specified in the preamble, we are codifying the Patients' Rights CoP within the current hospital CoPs under Subpart B—Administration at § 482.13. The six standards to the CoP will set forth minimum protections and will promote patients' rights. Changes have been made to strengthen the proposed regulation and are set forth as follows.

The first standard, Notice of Rights, states, ''A hospital must inform each patient, or when appropriate, the patient's representative (as allowed under State law) of the patient's rights in advance of furnishing or discontinuing patient care whenever possible.'' This standard also requires that the hospital have a grievance process and indicate who the patient can contact to express a grievance. The minimum elements that must be common to all hospital grievance processes are specified.

The second standard, Exercise of Rights, provides the patient the right to participate in the development and implementation of his or her plan of care, and to request or refuse treatment. The Exercise of Rights standard sets forth the patient's right to make decisions regarding his or her care and the right to formulate advance directives and to have hospital staff and practitioners who provide care in the hospital comply with those directives, in accordance with § 489.100 (Definition), § 489.102 (Requirements for providers), and § 489.104 (Effective dates). We have added a requirement that the patient has the right to have a family member or representative of his or her choice and his or her physician notified promptly of his or her admission to the hospital.

The third standard, Privacy and Safety, has been changed so that ''personal privacy'' and ''receive care in a safe setting'' could be made into two separate elements under this standard as requested by commenters. The final regulation states that ''The patient has the right to personal privacy,'' and, ''The patient has the right to receive care in a safe setting.'' We have altered the requirement that the patient has the right to be free from verbal or physical abuse and harassment to state that the patient has the right to be free from all forms of abuse or harassment.

The fourth standard, Confidentiality and Patient Records, contains the provisions of the proposed rule; specifically, the right to the confidentiality of his or her record and the right to access information contained in his or her clinical records within a reasonable time frame. To this standard, we have added a requirement stating that the hospital must not frustrate the legitimate efforts of individuals to gain access to their own medical records and must actively seek to meet these requests as quickly as its recordkeeping system permits.

The fifth standard, Restraint for Acute Medical and Surgical Care, codifies the patient's right to be free from both physical restraints and drugs that are used as a restraint that are not medically necessary or are used as a means of coercion, discipline, convenience, or retaliation by staff. The rule defines ''restraint,'' ''physical restraint,'' and ''drug used as a restraint.'' In accordance with commenters' suggestions, we removed the term ''psychopharmacological'' from the standard to acknowledge that a wide range of drugs may be used as a restraint.

The regulation states that a restraint can only be used when less restrictive interventions have been determined to be ineffective. It also acknowledges the ability of licensed independent practitioners authorized by the State and the hospital to write orders for restraints. The regulation states that the patient's treating physician must be contacted, as soon as possible, if the restraint is not ordered by the patient's treating physician. We have added language that mandates that restraints must never be written as a standing order, or on an as needed basis (that is, PRN). The final rule states that restraint use must be in accordance with a written modification to the patient's plan of care; in the least restrictive manner possible; in accordance with safe and appropriate restraining techniques; and selected only when other less restrictive measures have been found to be ineffective to protect the patient or others from harm. The standard regarding restraint use related to acute medical and surgical care also requires that the condition of the patient in restraints must be continually assessed, monitored, and reevaluated; the restriction of patient movement or activity by restraints be ended at the earliest possible time; and all direct care staff must have ongoing education and training in the proper and safe use of restraints.

The last standard, Seclusion and Restraint for Behavior Management, contains many of the same elements stated in the fifth standard (related to restraints used in acute medical and surgical care) but goes further by discussing the use of seclusion and provides specific requirements for the monitoring and evaluation of a secluded or restrained patient for behavior management.

This standard provides that seclusion or restraint for behavior management can only be used in emergency situations if it is needed to ensure the patient's physical safety, and less restrictive interventions have been

determined to be ineffective. This standard also provides that seclusion or restraint use must be in accordance with the order of a physician or other licensed independent practitioner who is permitted by the State and hospital to order seclusion or restraint use. It also requires that the patient's treating physician be consulted, as soon as possible, if the restraint or seclusion is not ordered by the patient's treating physician. The final rule also states explicitly that the requirement for restraint or seclusion use for behavior management will be superseded by existing State laws that are more restrictive.

This standard provides that seclusion or restraints may not be ordered on a standing or PRN basis. The regulation requires a physician or other licensed independent practitioner to see and evaluate the need for restraint or seclusion within 1 hour after the initiation of this intervention.

The final rule sets limits for each written order for physical restraints or seclusion based on a patient's age. For adults, the written order is limited to 4 hours; for children and adolescents (age 9–17), the written order is limited to 2 hours; for patients under age 9, the written order is limited to 1 hour. The final rule states that the original order may only be renewed for up to a total of 24 hours. After the original order expires, a physician or licensed independent practitioner (if permitted by State law) must see and assess the patient before issuing a new order.

The final rule states that any restraint or seclusion use must be in accordance with a written modification to the patient's plan of care, implemented in the least restrictive manner possible, in accordance with appropriate restraining techniques, and selected only when less restrictive measures have been found to be ineffective to protect the patient or others from harm.

The standard discusses restraints and seclusion used in combination, and provides that they may not be used simultaneously unless the patient is continually visually monitored, in person, by an assigned staff member, or is continually monitored by staff by audio and video equipment. This audio and video monitoring must occur in close proximity to the patient. It also states that the condition of the patient who is in restraints or seclusion must continually be assessed, monitored, and reevaluated and that the restriction of patient movement or activity by seclusion or restraint use must be ended at the earliest possible time.

The rule also requires that all staff who have direct patient contact have ongoing training in both the proper and safe use of seclusion and restraints and alternative techniques and methods for handling the behaviors, symptoms, and situations that traditionally have been treated through restraint and seclusion. While we are not detailing the sorts of behaviors, symptoms, and situations here, we plan to further describe them in the interpretive guidelines that will implement this regulation.

Finally, the regulation requires the hospital to report to us any death that occurs while a patient is restrained or in seclusion, or where it is reasonable to assume that a patient's death is as a result of restraint or seclusion.

VI. Regulatory Impact Statement

A. Overall Impact

We have examined the impact of this rule as required by Executive Order (E.O.) 12866 and the Regulatory Flexibility Act (RFA) (Public Law 96–354). E.O. 12866 directs agencies to assess all costs and benefits of available regulatory alternatives and, when regulation is necessary, to select regulatory approaches that maximize net benefits, including potential economic, environmental, public health and safety effects, distributive impacts, and equity.

The RFA (5 U.S.C. 601 through 612) requires agencies to analyze options for regulatory relief for small entities. Consistent with the RFA, we prepare a regulatory flexibility analysis unless we certify that a rule will not have a significant economic impact on a substantial number of small entities. For purposes of the RFA, we treat most hospitals and most other providers, physicians, health care suppliers, carriers, and intermediaries as small entities, either by nonprofit status or by having revenues of $5 million or less annually. Individuals and States are not included in the definition of a small entity.

Also, section 1102(b) of the Act requires us to prepare a regulatory impact analysis if a rule may have a significant impact on the operations of a substantial number of small rural hospitals. That analysis must conform to the provisions of section 604 of the RFA. For purposes of section 1102(b) of the Act, we define a small rural hospital as a hospital that is located outside of a Metropolitan Statistical Area and has fewer than 50 beds. Although the provisions of this interim final rule with comment do not lend themselves to a quantitative impact estimate, we do not anticipate that they would have a substantial economic impact on most Medicare-participating hospitals. However, to the extent the rule may have significant effects on providers or beneficiaries, or be viewed as controversial, we believe it is desirable to inform the public of our projections of the likely effects of the proposals.

The Unfunded Mandates Reform Act of 1995 requires (in section 202) that agencies prepare an assessment of anticipated costs and benefits for any rule that may result in an annual mandated expenditure by State, local, and tribal governments, in the aggregate or by both the private sector, of $100 million. This rule has no mandated consequential effect on State, local, or tribal governments, or the private sector and will not create an unfunded mandate.

In December 1997, we proposed to revise all of the hospital CoPs in concert with Vice President Gore's REGO initiative. The REGO initiative emphasized lessening Federal regulation to eliminate unnecessary structural and process requirements, focus on outcomes of care, allow greater flexibility to hospitals and practitioners to meet quality standards, and to place a stronger emphasis on quality assessment and performance improvement.

Within this newly revised CoP, we proposed the establishment of a Patients' Rights CoP for hospitals that contains rights not addressed in the current provisions. We solicited comments on the Patients' Rights CoP and received strong support for its establishment. There was consensus among the public, mental health advocacy groups, media, and the Congress that we should move toward establishing such a CoP. This consensus was prompted by serious concern about improper care of patients in the hospital setting, with regard to all aspects of patient care, including the use of seclusion and restraint. These factors led us to set forth this final rule with comment to ensure the protections of patients' rights in the hospital setting, including the right to be free from the use of seclusion and restraint. We believe that this regulation will broaden the consumer's role in safeguarding and participating in his or her care.

Consumer protections are of vital importance in the hospital setting. The recent focus of efforts such as the formulation of the Consumer Bill of Rights and Responsibilities points to the public acknowledgment of the important role that each individual is called upon to play in his or her care. We believe that Medicare CoPs must foster each individual's rights as an informed consumer and decision maker. Accordingly, we are promoting the

concepts in the Consumer Bill of Rights and Responsibilities, and we are asking the public for comments on incorporating additional consumer rights into the hospital CoPs in order to promote compliance with the Consumer Bill of Rights.

B. Anticipated Effects

1. Effect on Hospitals

Since the Patients' Rights CoP set forth below is a newly established CoP, we have no factual reports, studies, or data to aid in the development of cost or savings estimates. However, we believe most hospitals are already fulfilling many of the requirements of this regulation due to State requirements, and hospital policies and procedures, especially existing policies and procedures to meet the Life Safety Code and Physical Environment requirements of the current hospital CoP, which cover safe environment issues. Therefore, there may be no significant increase in burden to most hospitals.

Given the shift toward regulatory flexibility, for the most part, we are not prescribing the exact process hospitals must follow to meet the regulatory requirements regarding Patients' Rights. However, there are several provisions that will impact hospitals to a greater or lesser degree. Specifically, hospitals will have to establish policies and procedures necessary for compliance with this regulation: notification of rights, exercise of rights, privacy and safety, confidentiality, and patient access to records. Hospitals will have to develop a grievance process and ensure that staff are provided with ongoing education and training in the proper and safe use of seclusion and restraint application and techniques and alternative methods for handling behavior, symptoms, and situations that traditionally were treated through the use of restraints or seclusion. In addition, hospitals will have to report to the appropriate HCFA regional office any deaths that result from restraint or seclusion use for behavior management.

Regarding the grievance process, hospitals may use different approaches to effectively meet this CoP. We are setting forth the general elements that should be common to grievance processes across all hospitals, but we are not explicitly delineating strategies and policies to comply with the requirement. Also, we are setting forth more detailed, prescriptive requirements than were contained in the proposed rule for the use of seclusion and restraint for behavior management situations. Despite the potential burden associated with the implementation of some portions of this regulation, we believe that by recognizing and attending to patients' rights, hospitals may find improvements in patient collaboration and satisfaction with care, a reduction of patient-initiated lawsuits regarding care, and through the hospital's own grievance process, find a wealth of information to guide quality improvement efforts.

We expect hospitals to develop different approaches to compliance with the Patients' Rights CoP based on their varying resources and patient populations, differences in laws in various localities, and other factors. However, even in situations where the regulation could result in some immediate costs to an individual hospital (that is, developing and implementing a process to notify patients of their rights and allow patients to exercise their rights), we believe that the changes that the hospital would make would produce real long-term economic benefits to the hospital (that is, a reduction in lawsuits). It is important to note that because of the flexibility afforded hospitals to implement this regulation, the extent of the economic impact on individual hospitals will vary and is subject in large part to their decision-making. The impact will also vary according to each hospital's current policies and procedures and level of compliance with existing State law and regulations.

Overall, we believe that the benefits of complying with the Patients' Rights CoP will far outweigh the costs involved. We also note that with regard to the restraint and seclusion standards for both acute medical and surgical care and behavior management, there should be no significant additional burden for, at least, the 80 percent of Medicare-participating hospitals accredited by JCAHO since the requirements are modeled on JCAHO's standards for both their hospital accreditation program and their behavioral health care accreditation program. For the other 20 percent of hospitals that are nonaccredited, there may be some one-time costs associated with developing policies and procedures for restraint and seclusion use. However, we believe that the benefits far outweigh the costs because, from a risk management viewpoint, clear policies will protect the hospital from situations of inappropriate restraint and seclusion use and situations that may lead to patient injuries and death. There may be costs associated with developing training programs for staff regarding restraint and seclusion use and alternative interventions; however, we are not dictating how a hospital meets this requirement. Therefore, hospitals will be afforded the flexibility of deciding how to meet this requirement (for example, provide the training directly through ''in-house'' training, obtain a contractor to provide the training either at the hospital or off-site, etc.). We believe that the benefits associated with training staff far outweigh the costs involved since proper training will protect the hospital from situations of inappropriate restraint and seclusion use and situations that may lead to patient injuries and death.

Finally, hospitals will have to report to HCFA, through the appropriate HCFA regional office, any deaths that result from restraint or seclusion use for behavior management. We believe that the number of deaths related to restraint or seclusion use may be under reported in the United States; however, we have no concrete estimate of the number of deaths that occur per year. The *Hartford Courant*, a Connecticut newspaper, heightened public awareness of this issue with a series of articles in October 1998 citing the results of a study that identified 142 deaths from seclusion and restraint use in behavioral health treatment facilities over the past 10 years. However, this number includes deaths from seclusion and restraint use in more than just the hospital setting. There may be a small cost involved in making a telephone call to the HCFA regional offices; however, because we expect this regulation to reduce the number of deaths from restraint and seclusion use, the number of reports certainly will average less than one call per hospital per year. Therefore, we think the cost will be negligible.

2. Effect on Beneficiaries

The implementation of the Patients' Rights CoP will serve to protect not only Medicare and Medicaid beneficiaries but all patients receiving care in any of the 6,163 (4,734 accredited and 1,429 nonaccredited) Medicare-participating hospitals (that is, short-term, psychiatric, rehabilitation, long-term, children's, and alcohol-drug), including small rural hospitals. Our goal is to safeguard against the mistreatment of all patients in these facilities including, but not limited to, deaths due to inappropriate seclusion and restraint use, violation of patients' privacy and confidentiality in various aspects of the health care delivery process, and systematic frustration of the patient's efforts to acquire his or her medical record. We believe the patient will benefit from the hospital's focus on patients' rights. Through these

protections, patient care can be delivered in an atmosphere of respect for an individual patient's comfort, dignity, and privacy. We also believe that implementation of the Patients' Rights CoP will lead to a reduction in the numbers of restraint-related injuries and deaths in hospitals.

3. Effect on Medicare and Medicaid Programs

We do not expect the implementation of the new Patients' Rights CoP to generate any significant cost to the Medicare or Medicaid programs. Also, we do not believe there will be any additional costs to the survey and certification program as compliance with this new CoP will either be reviewed through a routine, nonaccredited hospital survey, validation survey or as part of the existing complaint survey process for hospitals.

C. Alternatives Considered

We considered adding more prescriptive requirements regarding exactly where, how, when, and by whom ''notification of rights'' must be carried out. However, in the interest of flexibility and the recognition that this requirement will apply to hospitals of varying size, operating in wide ranges of localities, serving diverse populations, we did not adopt this approach. We considered very general regulations text language addressing the establishment of a hospital grievance process. However, based on public comment, we decided that to remain silent on general expectations for the grievance process could result in the absence of key ingredients that promote a meaningful, substantial process that addresses patients' concerns and promotes their rights. We believe that the establishment of a grievance process promotes patient empowerment in health care. To promote the creation of an effective grievance process, we are establishing general elements that should be common to grievance processes across all hospitals. Development of more detailed strategies and policies to comply with the requirement will be left to the discretion of each hospital.

We originally considered developing one set of very general requirements regulating restraint and seclusion use in all hospitals for all situations. However, based on public comments and recent concerns about restraint and seclusion use for behavior management situations, we concluded that one set of requirements did not afford patients with adequate protections. In addition, we noted that JCAHO has more prescriptive standards for behavioral health care accreditation than for hospital accreditation.

We considered recognizing only physicians as the individuals able to order restraints or seclusion. However, in recognizing that licensure and scope of practice are within a State's domain, and considering that other types of licensed independent practitioners provide a great deal of care in rural and frontier areas, we did not adopt that approach. However, we are requesting comment on whether we should adopt more restrictive requirements that would allow only physicians to order restraints or seclusion for behavior management.

Regarding the time frames in which a physician or licensed independent practitioner must see and assess a patient after initiation of restraints or seclusion for behavior management, we considered adopting the Pennsylvania Office of Mental Health policy of a ½ hour time frame. However, we recognized that this requirement might not be realistic for rural or frontier areas where it may be impossible to get a physician or licensed independent practitioner to the hospital in ½ hour. Therefore, we propose a 1 hour time frame and ask the public for comment.

We considered adopting more restrictive requirements for the maximum time frames for the length of an order for restraint and seclusion. However, since there was no supporting literature or studies, we decided to adopt the approach and time frames developed and articulated by JCAHO for its hospital accreditation and behavioral health care accreditation programs. These standards were developed by experts from the health care field and represent consensus on the approach and time frames for issues of seclusion and restraints. In addition, 80 percent of the Medicare- and Medicaid-participating hospitals are already subject to these requirements. Therefore, we believe it is reasonable to adopt requirements similar to those of JCAHO.

D. Conclusion

The new Patients' Rights CoP for hospitals sets forth six standards that ensure minimum protections of each patient's physical and emotional health and safety. These standards address each patient's right to (1) Notification of his or her rights; (2) the exercise of his or her rights in regard to his or her care; (3) privacy and safety; (4) confidentiality of his or her records; (5) freedom from restraints used in the provision of acute medical and surgical care unless clinically necessary; and (6) freedom from seclusion and restraints used in behavior management unless clinically necessary. The Patients' Rights CoP is a new requirement for hospitals. Therefore, we have prepared a voluntary analysis consistent with the analysis set forth by the RFA. We solicit public comments on the extent that any of the entities would be significantly economically affected by these provisions.

VII. Collection of Information Requirements

Under the Paperwork Reduction Act (PRA) of 1995, agencies are required to provide 60-day notice in the **Federal Register** and solicit public comment before a collection of information requirement is submitted to the Office of Management and Budget (OMB) for review and approval. In order to fairly evaluate whether an information collection should be approved, section 3506(c)(2)(A) of the PRA requires that we solicit comment on the following issues:

- Whether the information collection is necessary and useful to carry out the proper functions of the agency;
- The accuracy of the agency's estimate of the information collection burden;
- Recommendations to minimize the information collection burden on the affected public, including automated collection techniques.

Therefore, we are soliciting public comment on each of these issues for the information collection requirements summarized and discussed below.

Section 482.13 Condition of Participation: Patients' Rights

A hospital must inform each patient, or when appropriate, the patient's representative (as allowed under State law), of the patient's rights in advance of furnishing patient care whenever possible.

We anticipate that a hospital will provide a single ''Notice of Patients'' Rights'' to each patient or his or her representative at the time of admission. As referenced in this regulation the disclosure notice must inform each patient of his or her right to (1) File a grievance and whom the patient can contact to file a grievance; (2) participate in the development and implementation of his or her plan of care; (3) make decisions regarding his or her care; (4) be informed of his or her status, involved in care planning and treatment, and the ability to refuse treatment; (5) formulate advance directives and to have hospital staff and practitioners who provide care in the hospital comply with these directives, in accordance with § 489.100, § 489.102, and § 489.104; (6) personal privacy; (7)

receive care in a safe setting, free from verbal or physical abuse or harassment; (8) confidentiality of his or her clinical records and the ability to access information contained in his or her clinical records within a reasonable time frame; and (9) be free from restraints and seclusion of any form used as a means of coercion, discipline, convenience, or retaliation by staff.

The burden associated with this requirement is the time and effort necessary to disclose the notice requirements referenced above to each patient. We estimate that on average it will take each of the 6,097 estimated hospitals 8 hours to develop the required notice and that it will take each hospital 5 minutes to provide each notice, with an average of 5,515 notices provided per hospital on an annual basis. Therefore, the total annual burden associated with this requirement is 2,850,801 hours.

In its resolution of the grievance, a hospital must provide the patient with written notice of its decision that contains the name of the hospital contact person, the steps taken on behalf of the patient to investigate the grievance, the results of the grievance process, and the date of completion.

The burden associated with this requirement is the time and effort necessary to disclose the written notice to each patient who filed a grievance. We estimate that on average it will take each hospital 15 minutes to develop and disseminate the required notice. We further estimate that 6,097 hospitals will provide 55 notices on an annual basis, a total annual burden of 83,834 hours.

Hospitals will have to report to HCFA, through the appropriate HCFA regional office, any deaths that result from restraint or seclusion use for behavior management. The burden associated with this requirement is for hospitals to notify HCFA, via telephone call, of any deaths. Based upon current data, we estimate the number of reports to average less than 10 calls on an annual basis. Therefore, this requirement is not subject to the PRA, as defined under 5 CFR 1320.3(c).

Hospitals must maintain documentation that each of the standards and related requirements referenced in this regulation have been met. While this requirement is subject to the PRA, we believe that the burden associated with this requirement is exempt from the PRA, as defined in 5 CFR 1320.3(b)(2) and 1320.3(b)(3) because this requirement is considered a usual and customary business practice; is required under State or local law; and is used to satisfy accreditation requirements.

We have submitted a copy of this final rule to OMB for its review of the information collection requirements in § 482.13. These requirements are not effective until they have been approved by OMB.

If you have any comments on any of these information collection and recordkeeping requirements, please mail the original and three copies directly to the following:

Health Care Financing Administration, Office of Information Services, Standards and Security Group, Division of HCFA Enterprise Standards, Room N2–14–26, 7500 Security Boulevard, Baltimore, MD 21244–1850, Attn: John Burke HCFA–3018–IFC.

and

Office of Information and Regulatory Affairs, Office of Management and Budget, Room 10235, New Executive Office Building, Washington, DC 20503, Attn: Allison Eydt, HCFA Desk Officer.

List of Subjects in 42 CFR Part 482

Grant programs—health, Health facilities, Medicaid, Medicare, Reporting and recordkeeping requirements.

For the reasons set forth in the preamble, 42 CFR chapter IV, part 482 is amended as follows:

PART 482—CONDITIONS OF PARTICIPATION FOR HOSPITALS

1. The authority citation for part 482 continues to read as follows:

Authority: Secs. 1102 and 1871 of the Social Security Act (42 U.S.C. 1302 and 1395hh), unless otherwise noted.

Subpart B—Administration

2. Section 482.13 is added to subpart B to read as follows:

§ 482.13 Condition of participation: Patients' rights.

A hospital must protect and promote each patient's rights.

(a) *Standard: Notice of rights.* (1) A hospital must inform each patient, or when appropriate, the patient's representative (as allowed under State law), of the patient's rights, in advance of furnishing or discontinuing patient care whenever possible.

(2) The hospital must establish a process for prompt resolution of patient grievances and must inform each patient whom to contact to file a grievance. The hospital's governing body must approve and be responsible for the effective operation of the grievance process and must review and resolve grievances, unless it delegates the responsibility in writing to a grievance committee. The grievance process must include a mechanism for timely referral of patient concerns regarding quality of care or premature discharge to the appropriate Utilization and Quality Control Peer Review Organization. At a minimum:

(i) The hospital must establish a clearly explained procedure for the submission of a patient's written or verbal grievance to the hospital.

(ii) The grievance process must specify time frames for review of the grievance and the provision of a response.

(iii) In its resolution of the grievance, the hospital must provide the patient with written notice of its decision that contains the name of the hospital contact person, the steps taken on behalf of the patient to investigate the grievance, the results of the grievance process, and the date of completion.

(b) *Standard: Exercise of rights.* (1) The patient has the right to participate in the development and implementation of his or her plan of care.

(2) The patient or his or her representative (as allowed under State law) has the right to make informed decisions regarding his or her care. The patient's rights include being informed of his or her health status, being involved in care planning and treatment, and being able to request or refuse treatment. This right must not be construed as a mechanism to demand the provision of treatment or services deemed medically unnecessary or inappropriate.

(3) The patient has the right to formulate advance directives and to have hospital staff and practitioners who provide care in the hospital comply with these directives, in accordance with § 489.100 of this part (Definition), § 489.102 of this part (Requirements for providers), and § 489.104 of this part (Effective dates).

(4) The patient has the right to have a family member or representative of his or her choice and his or her own physician notified promptly of his or her admission to the hospital.

(c) *Standard: Privacy and safety.* (1) The patient has the right to personal privacy.

(2) The patient has the right to receive care in a safe setting.

(3) The patient has the right to be free from all forms of abuse or harassment.

(d) *Standard: Confidentiality of patient records.* (1) The patient has the right to the confidentiality of his or her clinical records.

(2) The patient has the right to access information contained in his or her clinical records within a reasonable time frame. The hospital must not

frustrate the legitimate efforts of individuals to gain access to their own medical records and must actively seek to meet these requests as quickly as its recordkeeping system permits.

(e) *Standard: Restraint for acute medical and surgical care.* (1) The patient has the right to be free from restraints of any form that are not medically necessary or are used as a means of coercion, discipline, convenience, or retaliation by staff. The term ''restraint'' includes either a physical restraint or a drug that is being used as a restraint. A physical restraint is any manual method or physical or mechanical device, material, or equipment attached or adjacent to the patient's body that he or she cannot easily remove that restricts freedom of movement or normal access to one's body. A drug used as a restraint is a medication used to control behavior or to restrict the patient's freedom of movement and is not a standard treatment for the patient's medical or psychiatric condition.

(2) A restraint can only be used if needed to improve the patient's well-being and less restrictive interventions have been determined to be ineffective.

(3) The use of a restraint must be—

(i) Selected only when other less restrictive measures have been found to be ineffective to protect the patient or others from harm;

(ii) In accordance with the order of a physician or other licensed independent practitioner permitted by the State and hospital to order a restraint. This order must—

(A) Never be written as a standing or on an as needed basis (that is, PRN); and

(B) Be followed by consultation with the patient's treating physician, as soon as possible, if the restraint is not ordered by the patient's treating physician;

(iii) In accordance with a written modification to the patient's plan of care;

(iv) Implemented in the least restrictive manner possible;

(v) In accordance with safe and appropriate restraining techniques; and

(vi) Ended at the earliest possible time.

(4) The condition of the restrained patient must be continually assessed, monitored, and reevaluated.

(5) All staff who have direct patient contact must have ongoing education and training in the proper and safe use of restraints.

(f) *Standard: Seclusion and restraint for behavior management.* (1) The patient has the right to be free from seclusion and restraints, of any form, imposed as a means of coercion, discipline, convenience, or retaliation by staff. The term ''restraint'' includes either a physical restraint or a drug that is being used as a restraint. A physical restraint is any manual method or physical or mechanical device, material, or equipment attached or adjacent to the patient's body that he or she cannot easily remove that restricts freedom of movement or normal access to one's body. A drug used as a restraint is a medication used to control behavior or to restrict the patient's freedom of movement and is not a standard treatment for the patient's medical or psychiatric condition. Seclusion is the involuntary confinement of a person in a room or an area where the person is physically prevented from leaving.

(2) Seclusion or a restraint can only be used in emergency situations if needed to ensure the patient's physical safety and less restrictive interventions have been determined to be ineffective.

(3) The use of a restraint or seclusion must be—

(i) Selected only when less restrictive measures have been found to be ineffective to protect the patient or others from harm;

(ii) In accordance with the order of a physician or other licensed independent practitioner permitted by the State and hospital to order seclusion or restraint. The following requirements will be superseded by existing State laws that are more restrictive:

(A) Orders for the use of seclusion or a restraint must never be written as a standing order or on an as needed basis (that is, PRN).

(B) The treating physician must be consulted as soon as possible, if the restraint or seclusion is not ordered by the patient's treating physician.

(C) A physician or other licensed independent practitioner must see and evaluate the need for restraint or seclusion within 1 hour after the initiation of this intervention.

(D) Each written order for a physical restraint or seclusion is limited to 4 hours for adults; 2 hours for children and adolescents ages 9 to 17; or 1 hour for patients under 9. The original order may only be renewed in accordance with these limits for up to a total of 24 hours. After the original order expires, a physician or licensed independent practitioner (if allowed under State law) must see and assess the patient before issuing a new order.

(iii) In accordance with a written modification to the patient's plan of care;

(iv) Implemented in the least restrictive manner possible;

(v) In accordance with safe appropriate restraining techniques; and

(vi) Ended at the earliest possible time.

(4) A restraint and seclusion may not be used simultaneously unless the patient is—

(i) Continually monitored face-to-face by an assigned staff member; or

(ii) Continually monitored by staff using both video and audio equipment. This monitoring must be in close proximity the patient.

(5) The condition of the patient who is in a restraint or in seclusion must continually be assessed, monitored, and reevaluated.

(6) All staff who have direct patient contact must have ongoing education and training in the proper and safe use of seclusion and restraint application and techniques and alternative methods for handling behavior, symptoms, and situations that traditionally have been treated through the use of restraints or seclusion.

(7) The hospital must report to HCFA any death that occurs while a patient is restrained or in seclusion, or where it is reasonable to assume that a patient's death is a result of restraint or seclusion.

(Catalog of Federal Domestic Assistance Program No. 93.773, Medicare Hospital Insurance; Program No. 93.778, Medical Assistance Program)

Dated: May 24, 1999.

Nancy-Ann Min DeParle,

Administrator, Health Care Financing Administration.

Approved: June 9, 1999.

Donna E. Shalala,

Secretary.

[FR Doc. 99–16543 Filed 6–24–99; 4:29 pm]

BILLING CODE 4120–01–P

federal register

Friday
July 2, 1999

Part III

Department of the Treasury

Internal Revenue Service

26 CFR Parts 1, 301, and 602

Consolidated Returns—Limitations on the Use of Certain Losses and Deductions

Regulations Under Section 1502 of the Internal Revenue Code of 1986; Limitations on Net Operating Loss Carryforwards and Certain Built-in Losses and Credits Following an Ownership Change of a Consolidated Group

Regulations Under Section 382 of the Internal Revenue Code of 1986; Application of Section 382 in Short Taxable Years and With Respect to Controlled Groups; Final Rules

DEPARTMENT OF THE TREASURY

Internal Revenue Service

26 CFR Parts 1, 301, and 602

[TD 8823]

RIN 1545–AU31

Consolidated Returns—Limitations on the Use of Certain Losses and Deductions

AGENCY: Internal Revenue Service (IRS), Treasury.

ACTION: Final and temporary regulations.

SUMMARY: This document contains final regulations regarding certain deductions and losses, including built-in deductions and losses, of members who join a consolidated group. The regulations provide rules for computing the limitation with respect to separate return limitation year (SRLY) losses, and the carryover or carryback of losses to consolidated and separate return years. The regulations also eliminate the application of the SRLY rules in certain circumstances in which the rules of section 382 of the Internal Revenue Code also apply.

DATES: *Effective Dates:* These regulations are effective June 25, 1999.

Applicability Dates: For dates of applicability, see the ''Dates of Applicability'' portion of this preamble.

FOR FURTHER INFORMATION CONTACT: Jeffrey L. Vogel, or Marie Milnes-Vasquez at (202) 622–7770 (not a toll-free number).

SUPPLEMENTARY INFORMATION:

Paperwork Reduction Act

The collection of information in this final rule has been reviewed and, pending receipt and evaluation of public comments, approved by the Office of Management and Budget (OMB) under 44 U.S.C. 3507 and assigned control number 1545–1237.

The collection of information in this regulation is in § 1.1502–21(b)(3). This information is required to ensure that an election to relinquish a carryback period is properly documented, and will be used for that purpose. The collection of information is required to obtain a benefit (relating to the carryover of losses which would otherwise be carried back). The likely respondents are consolidated groups.

Comments on the collection of information should be sent to the Office of Management and Budget, Attn: Desk Officer for the Department of the Treasury, Office of Information and Regulatory Affairs, Washington, DC 20503, with copies to the Internal Revenue Service, Attn: IRS Reports Clearance Officer, OP:FS:FP, Washington, DC 20224. Comments on the collection of information should be received by August 31, 1999.

Comments are specifically requested concerning: Whether the collection of information is necessary for the proper performance of the functions of the Internal Revenue Service, including whether the information will have practical utility; The accuracy of the estimated burden associated with the collection of information (see below); How the quality, utility, and clarity of the information to be collected may be enhanced; How the burden of complying with the collection of information may be minimized, including through the application of automated collection techniques or other forms of information technology; and

Estimates of capital or start-up costs and costs of operation, maintenance, and purchase of service to provide information.

Estimated total annual reporting burden: 2,000 hours.

Estimated average annual burden hours per respondent: 15 minutes.

Estimated number of respondents: 8,000.

Estimated annual frequency of responses: On occasion.

An agency may not conduct or sponsor, and a person is not required to respond to, a collection of information unless it displays a valid control number assigned by the Office of Management and Budget.

Books or records relating to a collection of information must be retained as long as their contents may become material in the administration of any internal revenue law. Generally, tax returns and tax return information are confidential, as required by 26 U.S.C. 6103.

Background and Explanation of Provisions

On February 4, 1991, the Treasury and the IRS issued three notices of proposed rulemaking, C0–132–87 (56 FR 4194), CO–077–90 (56 FR 4183), and CO–078–90 (56 FR 4228), setting forth amendments to the rules regarding net operating losses, built-in deductions, and capital losses of consolidated groups. Those proposed regulations also included rules regarding the carryover and carryback of losses to consolidated return years and separate return years, and rules regarding the application of section 382 and 383 by consolidated groups and by controlled groups. A public hearing regarding the three sets of proposed regulations was held on April 8, 1991.

On June 27, 1996, the Treasury and the IRS published temporary regulations regarding the separate return limitation year (SRLY) limitation (TD 8677, 61 FR 33321). These regulations were substantially identical to the proposed regulations. A notice of proposed rulemaking cross-referencing the temporary regulations, the 1996 proposed SRLY regulations, was published in the **Federal Register** on the same day (CO–024–96, 61 FR 33393), and the proposed regulations published in 1991 were withdrawn. The Treasury and the IRS also published temporary regulations (TD 8678, 61 FR 33335) setting forth rules regarding the application of section 382 to affiliated groups of corporations filing consolidated returns, and controlled group losses (TD 8679, 61 FR 33391). Notices of proposed rulemaking cross-referencing these temporary regulations were published on the same day (CO–026–96, 61 FR 33395, and CO–025–96, 61 FR 33395), and the earlier proposed regulations published in 1991 were withdrawn.

On August 10, 1998, the Treasury and the IRS issued Notice 98–38 (1998–32 I.R.B. 4). The Notice requested comments about the advisability of adopting rules that would replace the existing SRLY rules with an approach modeled on section 382.

As companions to this Treasury decision, which adopts the 1996 proposed SRLY regulations with certain revisions and modifications, the Treasury and the IRS are also issuing final regulations relating to the application of sections 382 and 383 by members of consolidated and controlled groups. See TD 8824 and TD 8825 published elsewhere in this issue of the **Federal Register.**

On January 12, 1998, the Treasury and IRS issued temporary and proposed regulations governing the use of tax credits of a consolidated group and its members (TD 8751, 63 FR 1740). The Treasury and IRS intend to finalize those regulations at a later date.

Operation of the Proposed and Temporary Regulations

The 1991 proposed regulations generally retained the approach of the prior SRLY regulations in limiting a consolidated group's use of attributes arising in or attributable to a SRLY, but altered the manner in which the limitation is computed. While the pre-1991 regulations determined the limitation separately for each member (fragmentation), and under a year-by-year approach, the proposed regulations

introduced two new concepts: subgrouping and the cumulative register.

Subgrouping was added because fragmentation is in many ways inconsistent with the single entity approach to the use of losses under the consolidated return regulations. For example, if an entire consolidated group were acquired by another group, under the fragmentation approach, none of the losses of a former member of the target group could be used to offset income of another former member of the target group. However, had no acquisition occurred, those losses could have been used to offset income within the target group.

The 1991 proposed regulations also introduced the concept of a cumulative register to address certain issues resulting from the year-by-year approach. The prior SRLY regulations based the limitation on the SRLY member's annual contribution to the group's consolidated taxable income. The SRLY limitation was computed by taking the difference between the group's consolidated taxable income ''with'' the SRLY member and ''without'' the SRLY member. This resulted in certain anomalies. For example, if a SRLY member produced income in a tax year but the group as a whole did not have income, the SRLY loss could not be absorbed in that year. Because the member's contribution to income was not carried over to later years, the SRLY losses also could not be absorbed in a later year unless the member also contributed to the group's taxable income in that year.

The cumulative register, rather than looking to a member's contribution for the year, includes in the limitation computation a member's complete income history while it is a member of a consolidated group. The cumulative register is determined by aggregating a member's net contribution of income in excess of losses absorbed during the entire period the member was in the consolidated group. To the extent that the cumulative register for a member is positive, that member's SRLY net operating losses can be absorbed in a consolidated return year (provided the group otherwise has taxable income) even though the member might not have contributed to taxable income in that year. On the other hand, if the cumulative register is negative, the absorption of losses is precluded even though the member might have contributed to taxable income in that consolidated return year.

Much of the complexity of the SRLY rules results from the subgroup and cumulative register concepts. In fact, the preamble to the proposed SRLY regulations acknowledged that the subgrouping approach was more complex than the fragmentation approach and solicited comments about whether the benefits provided by subgrouping outweigh and justify the additional burdens required, and whether the fragmentation approach should be retained. 1991–1 C.B. 759. No comments received in response to this request advocated the elimination of subgrouping or the cumulative register, and it was ultimately decided that these principles would be retained.

Comments

Comments were received in response to the 1991 proposed regulations, the 1996 temporary regulations and Notice 98–38. Some comments addressed whether the SRLY rules should be retained. Other comments addressed issues about the technical operation of the proposed rules.

All of the comments were evaluated in finalizing these regulations. Several suggestions were adopted while others were not. This preamble describes some of the decisions that were made in finalizing the regulations.

Elimination or Retention of SRLY

The preliminary issue considered in finalizing these regulations was the extent, if any, to which the SRLY rules should be retained. The comments were divided about whether to retain or eliminate SRLY. Some commentators asserted that the amendment to section 382 in 1986 adequately addressed Congressional concerns regarding loss trafficking. Therefore, it was argued, the SRLY rules should be eliminated because they have become superfluous, add unwarranted complexity to the consolidated return system, and are easily avoided. Other commentators asserted that the SRLY rules should be retained because in their view, policing loss trafficking is incidental to SRLY's function of resolving a single entity/separate entity conflict in applying the consolidated return regulations. A third group suggested a middle position by urging the elimination of SRLY only in those circumstances in which the rules of section 382 also apply.

Arguments for Elimination of SRLY

Some commentators urged elimination of the SRLY rules (either in whole or in part) because, in their view, section 382 provides sufficient protection against loss trafficking transactions. They asserted that the rules of section 382 provide greater precision and predictability about the consequences of a transfer of tax losses, and that section 382 promotes neutrality between a buyer and seller of tax benefits in a more efficient and more equitable way than do the SRLY rules.

Section 382 and SRLY overlap to a large extent, and the rules applying section 382 to consolidated groups are even more complex than the SRLY rules. Thus, these commentators asserted that requiring a taxpayer to run the SRLY gauntlet in addition to the section 382 gauntlet is unwarranted because any additional revenue that might be gained from retaining a dual limitation is outweighed by the added complexity of the SRLY rules.

These commentators argued that the complexity of the SRLY rules is unwarranted because the impact of the SRLY rules is easily avoided by various ''self-help'' techniques. For example, taxpayers can contribute income-producing assets or built-in gain assets to the SRLY member to minimize the effect of a SRLY limitation. They also argued that the SRLY rules impose a meaningful limitation only in those cases in which, for regulatory or other reasons, loss corporations cannot be combined with other profitable businesses. Some commentators also argued that the SRLY rules improperly discriminate between stock and asset acquisitions. Other arguments urging the elimination of SRLY asserted that section 382 supercedes the SRLY rules as a Congressionally mandated rule for policing loss trafficking and that the SRLY rules are inconsistent with treating the consolidated group as a single entity.

Arguments for Retention of SRLY

Notwithstanding the substantial area of overlap between section 382 and SRLY, section 382 does not always apply when SRLY does. In fact, most commentators expressed concern about loss trafficking through carryback transactions (to which section 382 does not apply) and acknowledged the need for a rule to police those transactions. Many urged retention of the existing SRLY rules at least for that purpose. Moreover, some commentators speculated that elimination of the SRLY rules would likely present new unforeseen opportunities for trafficking in tax benefits.

Those commentators supporting retention of SRLY argued that the objectives of section 382 and SRLY differ. Section 382, which seeks to prevent loss trafficking, is based on the notion that the rate of loss utilization following a change in ownership should be based on the expected income generated if all of the assets were converted to tax-exempt debt

instruments. Accordingly, section 382 permits a fixed amount of income to be used each year to absorb a loss, regardless of the actual income contribution of the loss corporation. Moreover, under section 382 and in the absence of SRLY, the available loss can be used against any member's income. SRLY, on the other hand, makes actual income generation by the SRLY member the determinant of loss usage. Thus, SRLY assures that the loss attributes that arose outside of the consolidated group are not generally available to the other group members.

These commentators noted that the consolidated return system combines single and separate entity treatment. The ability to offset the income of one member with the losses of another member reflects single entity treatment of the consolidated group. But, when a corporation becomes a member of a consolidated group, it retains its separate existence and individual status, its own accounting methods, and its own separate attributes, including its losses that are carried from a separate return year to a consolidated return year. These aspects reflect treatment of each member of a consolidated group as a separate entity. The carryover of losses from separate return years reflects separate entity treatment, while the sharing of losses among the members of a consolidated group reflects single entity treatment. Thus, there is a conflict between single entity and separate entity treatment. Single entity treatment in computing consolidated taxable income is inconsistent with permitting a corporation's losses to straddle consolidated and separate return years when it enters or leaves a consolidated group. These commentators argued that the SRLY rules present a resolution of this conflict and protect the integrity of the consolidated return system by ensuring that attributes arising in a separate return year belong to, and remain with, the SRLY member, and attributes arising in a consolidated return year belong to the group.

Through these rules, according to these commentators, SRLY seeks to provide that the manner and extent to which a corporation's separate tax attributes are absorbed or utilized should not vary based on whether the corporation is inside or outside a consolidated group. Unlike in the case of section 382, the policy objectives underlying these rules do not hinge on whether the ownership of the corporation changes upon its entrance into or departure from the group.

Moreover, commentators urging the retention of SRLY pointed out that the rules of section 381 dictate the circumstances under which one corporation can use the tax attributes of another corporation. In certain reorganizations, section 381 allows the tax attributes of one corporation to be used by another corporation after an acquisition, but in those transactions generally stock basis is also lost. By contrast, in a taxable stock purchase where the stock takes a cost basis and the corporation retains its existence, including its underlying attributes, there is no policy reason for those attributes to be freely available to the purchaser. In essence, these commentators argued, the SRLY limitation prevents the benefits provided by section 381 in certain reorganization transactions from being extended to acquisitions and restructurings that do not involve the commingling of assets in one entity that section 381 transactions generally require. A consolidated group's acquisition of the stock of a corporation should not be treated the same way as an asset acquisition.

Notice 98–38

Notice 98–38 announced that the Treasury and the IRS were considering an approach that would model the SRLY limitation on the mechanism of section 382. One intended advantage of this approach was to reduce complexity in cases of overlap of the SRLY rules with section 382. In those cases, the SRLY limitation would be the same as the section 382 limitation, and consolidated groups would not need to make two computations to determine how much income could be used to absorb a loss. A second intended advantage was to address concerns that the impact of a SRLY limitation can be minimized by stuffing transactions (e.g., transferring income-producing assets to the loss corporation) which could not be used to affect the section 382 limitation.

Although many commentators favor the elimination of a separate SRLY limitation in the case where section 382 also applies, commentators did not favor adoption of the section 382 mechanism in cases where section 382 does not otherwise apply. Commentators argued that imposing a limitation based on section 382 in a case where section 382 would not otherwise apply would be inordinately burdensome. Because (absent an ownership change) the owners of a loss corporation held outside a consolidated group could engage in a stuffing transaction in order to increase that corporation's loss absorption, commentators argued that a SRLY limitation that could not be increased through stuffing transactions would violate the objective of providing that the extent of a corporation's loss absorption should not vary based on whether it is inside or outside a consolidated group.

In light of these concerns, the Treasury and the IRS decided not to impose a SRLY limitation based on the mechanism of section 382.

The Overlap Rule

The Treasury and the IRS believe that limitations on the extent to which a consolidated group can use attributes arising in a separate return limitation year remain necessary. However, the Treasury and the IRS remain concerned about complexity in applying the current SRLY rules, particularly with respect to situations where both the SRLY rules and section 382 apply. As described above, the SRLY limitation is based on the member's (or subgroup's) actual contribution to consolidated taxable income. The section 382 limitation is based on the expected income generation of the member (or subgroup) determined with reference to its value on the change date. On balance, the Treasury and the IRS believe that the simultaneous or proximate imposition of a section 382 limitation reasonably approximates a corresponding SRLY limitation. Accordingly, these regulations generally eliminate the SRLY limitation in circumstances in which its application overlaps with that of section 382.

In the majority of cases, the date on which a corporation becomes a member of a consolidated group (and thus subject to the SRLY rules) is also a ''change date'' as defined in section 382(j), determined as a result of an ownership change as defined in section 382(g). In this situation, under the temporary regulations, taxpayers must calculate two separate limitations for loss carryovers—the SRLY limitation and the section 382 limitation. The final regulations provide an overlap rule which eliminates the application of the SRLY rules in this situation. As a result, the final regulations remove the burden of determining two limitations, and simplify the loss limitation rules applicable to consolidated groups in most instances in which both the SRLY and the section 382 limitations would otherwise arise.

To address situations in which not all of an acquisition occurs simultaneously, the overlap rule also applies if the acquisition results in a corporation joining the consolidated group on a date other than the ''change date'', provided the transactions are separated by no more than six months. Additional rules have been included to prevent the

inappropriate operation of the overlap rule in certain cases involving the acquisition of multiple corporations.

Net Operating Losses

Generally, to qualify for the net operating loss overlap rule, a corporation must become a member of a consolidated group (a SRLY event) within six months of the change date of an ownership change that gives rise to a section 382(a) limitation with respect to that carryover (a section 382 event). For net operating losses, an overlap also will generally include situations in which a net operating loss arises in the maximum six month period after the section 382 event but before the SRLY event.

For example, if a section 382 event occurs on April 1 and a SRLY event occurs on September 1, any losses that arise between April 1 and September 1 would not be subject to a section 382 limitation because they would be allocable to the post-change period. However, in the absence of the overlap rule, those losses would be subject to a SRLY limitation. The overlap rule of the final regulations eliminates the application of SRLY to those post-change losses. In cases of an acquisition of a single corporation, the elimination of SRLY has been determined to be an appropriate result and is a trade-off to promote simplicity in the consolidated return regulations.

The final regulations provide special overlap rules for subgroups. In general, the overlap rule applies to the subgroup and not separately to the members of the subgroup. However, the overlap rule does not apply unless the SRLY subgroup is coextensive with the section 382 loss subgroup. This rule is necessary because a section 382 subgroup limitation that is computed with respect to the expected income generation of a group of corporations does not reasonably approximate a limitation that would be based on the actual contribution to consolidated taxable income by a smaller number of corporations. In the reverse case, where the SRLY subgroup is larger than any corresponding section 382 loss subgroup or single new loss member, and particularly with respect to built-in losses, it is unclear in certain circumstances how the overlap rule could be applied. To address such circumstances in which a SRLY subgroup would otherwise be larger than the corresponding section 382 subgroup or single new loss member, the accompanying final regulations relating to the application of sections 382 and 383 provide for an election effectively to expand a newly-formed section 382 subgroup to conform with a SRLY subgroup.

For example, assume that the S consolidated group (composed entirely of S and T) has a $200 consolidated net operating loss, of which $100 is attributable to S and $100 is attributable to T. If the M group acquires the S group, S and T compose both a SRLY subgroup as well as a section 382 loss subgroup. Because the subgroups are coextensive, the overlap rule applies to eliminate the application of SRLY in the M group for the $200 consolidated net operating loss.

The overlap rule will not apply, however, if all the corporations included in a section 382 loss subgroup are not also included in a SRLY subgroup. For example, in Year 1, T joins the S group with a net operating loss carryover in a transaction that is not subject to section 382, and T does not subsequently have an ownership change. Under § 1.1502–96 (relating to the end of separate tracking), after five years, T's net operating loss becomes an attribute of the S group (also referred to as a ''fold-in'') for section 382 purposes. If the P group later acquires S in a transaction to which section 382 applies, the section 382 loss subgroup with respect to the T loss would include S and T, but for SRLY purposes there would be no subgroup. In this situation, the overlap rule would not apply, and the limitations under both SRLY and section 382 would continue to apply.

To preserve the effect of the elimination of SRLY under the overlap rule as corporations move from group to group, the final regulations also provide a special rule expanding the definition of SRLY subgroups. Under this rule, a SRLY subgroup includes a member carrying over a loss that was subject to the overlap rule in a former group, and all members of that former group who become a member of the current group at the same time as the loss member. The effect of this rule is to increase the number of circumstances in which SRLY subgroups and section 382 subgroups will be coextensive as corporations move from group to group. However, SRLY and section 382 subgroups may not be coextensive with respect to losses that were carried into a former group in a transaction to which the overlap rule does not apply. Subgroups may not be coextensive, as demonstrated above, if for purposes of section 382, such losses ''fold-in'' to the former group by virtue of an ownership change occurring more than six months after the SRLY event or because the loss member remains a member of the former group for at least five years.

Operating Rules

If the section 382 event occurs on the same date as the SRLY event or precedes the SRLY event, the overlap rule, and therefore the elimination of SRLY, is applicable to the tax year that includes the SRLY event. If the SRLY event precedes the section 382 event, the elimination of SRLY is delayed until the first tax year that begins after the section 382 event. The delay is necessary to ensure that an adequate limitation is always in effect for a net operating loss carryover.

For example, for a calendar year consolidated group, if the SRLY event occurs December 1, Year 1, but the section 382 event occurs on April 1, Year 2, it is necessary to maintain the application of the SRLY rules between such dates because otherwise no limitation would be applicable and the separate attributes could be freely absorbed during that period.

Built-in Losses

The overlap rule for built-in losses is very similar to the overlap rule for net operating losses. Generally, to qualify for the built-in loss overlap rule, a SRLY event must occur within six months of the change date of an ownership change that gives rise to a section 382(a) limitation that would apply to recognized built-in losses (a section 382 event). However, the overlap rule does not apply (even with respect to assets held on the date of the section 382 event) if assets are transferred to a corporation after the section 382 event and before the SRLY event that exceed the de minimis threshold of section 382(h). In that case, both the SRLY rules and the section 382 rules will apply. Even after the application of the overlap rule, the SRLY rules for built-in losses apply to asset acquisitions by an acquired corporation that occur after the latter or the SRLY event or section 382 event.

Special Subgroup Rule for Built-in Losses

The temporary regulations provide that, for purposes of built-in losses, a SRLY subgroup consists of those members that have been continuously affiliated for the 60-month period ending immediately before they become members of the group in which the loss is recognized. Generally, the final regulations maintain the subgroup rule provided by the temporary regulations. The final regulations, however, modify the subgroup rules to take account of the overlap rule. These modifications, in effect, conform the SRLY subgroup rules to adopt principles contained in

§§ 1.1502–91 through 1.1502–98 (regarding the application of section 382 to consolidated groups) where necessary to preserve the effect of an overlap transaction in a former group and to increase the number of SRLY and section 382 subgroups that are coextensive and eligible for future operation of the overlap rule as corporations move from group to group.

The final regulations provide that after a corporation joins a group in an overlap transaction, it is deemed to have been affiliated with the common parent of the acquiring group for 60 consecutive months. Those corporations that join the group in the same transaction, but that were not part of a subgroup eligible for the overlap rule, begin measuring the period of their affiliation immediately after joining the group, notwithstanding their actual affiliation history. This rule may prevent some corporations from subsequently qualifying as a SRLY subgroup, notwithstanding their actual affiliation history. For example, assume that after four years of affiliation, S and T join the P group without any net operating loss carryovers. S, which has a net unrealized built-in loss, and T, which has a net unrealized built-in gain, would not qualify as a SRLY subgroup with respect to their built-in items because they do not have the requisite affiliation history. Therefore, S and T are tested separately under section 382 and § 1.1502–15. The acquisition results in S becoming subject to section 382 (but owing to the overlap rule, not to the limitation contained in § 1.1502–15(a)). T is not subject to either. Because S joined the P group in a transaction subject to the overlap rule, it is deemed to have been affiliated with P for 60 consecutive months. T, however, is required to begin measuring its affiliation with P and S from the date it joined the group, notwithstanding its historic affiliation with S.

Other Substantive Changes

Predecessors and Successors

Material Difference Requirement

The temporary regulations provide that a reference to a corporation or member also includes, as the context may require, a reference to a successor or predecessor. See, § 1.1502–15T(e) and § 1.1502–21T(f). The definition of predecessor is provided in § 1.1502–1(f)(4). In general, a predecessor is any transferor of assets in a section 381(a) transaction. A predecessor also includes any transferor of assets in a transaction in which the basis of assets to the transferee (successor) is determined by reference to the transferor's basis, but only if there is a ''material difference'' between the basis and the value of assets. Thus the application of the predecessor rule to a section 351 transaction is dependent upon the specific assets transferred, and consequently a transferor in a section 351 transaction might not qualify as a predecessor. Also, in the case of such a section 351 transaction, the temporary regulations provided that there be a maximum of one predecessor to, or successor of, any member.

Commentators objected to the ''material difference'' requirement and suggested that a section 351 transferee should not be excluded from successor status solely because there was no material difference between the basis and value of the assets transferred. The final regulations eliminate both the material difference and the single predecessor-successor requirements.

CNOL Carrybacks

Section 1.1502–21T(b)(2)(B) of the temporary regulations provides an offspring rule which generally permits the common parent of a group to carryback a consolidated net operating loss (CNOL) attributable to a member that did not exist in the year to which the loss is carried, provided that the member has been a member of the group continuously since its organization. In that section, there is also a reference to the application of the predecessor and successor rule of § 1.1502–21T(f), which states that a reference to a member also includes references to a predecessor of the member, as the context may require.

Commentators were concerned that the combination of the predecessor and successor rule would deny any carryback in the case of a merger under section 368(a)(1)(A) and (a)(2)(D). For example, assume that P, the common parent of a consolidated group, forms Newco in Year 2 for the sole purpose of acquiring T, in a merger with and into Newco. In Year 3, there is a CNOL all of which is attributable to Newco. Newco appears to be within the scope of the offspring rule, and therefore a carryback to P's Year 1 consolidated return, a year before Newco's existence, would be permitted. However, because the merger is a transaction to which section 381(a) applies, Newco is also a successor to T. Under this analysis, Newco would not be considered to have been a member of the P group continuously since its organization, so a carryback to the P group's consolidated return year would not be permitted. Moreover, Newco would not be permitted to carryback the loss to any year of T. Thus, no carryback of Newco's loss would be permitted.

The Treasury and the IRS believe that the denial of any carryback in this situation is inappropriate. In general, a newly-formed group member should be permitted to carry back its contribution to the consolidated net operating loss, whether or not it is a successor to a corporation that was acquired by the group. Moreover, the Treasury and the IRS believe that rules providing for a carryback within—rather than outside—the group would be more administrable than rules requiring taxpayers to trace the assets of a newly-formed member to determine whether such corporation's contribution to the consolidated net operating loss should be carried back to the pre-consolidation years of an acquired corporation or back within the group. The Treasury and the IRS also considered whether to provide that all consolidated net operating losses should be carried back within the group, even if attributable to a corporation that was itself acquired from outside the group. Whether or not such a rule is appropriate, it was determined that such a change should not be adopted in final regulations. Accordingly, the final regulations provide that the offspring rule applies regardless of whether the newly-formed member is a successor to any other corporation.

Successor's Income

Section 1.1502–21T(f)(2) of the temporary regulations provides, ''Except as the Commissioner may otherwise determine, any increase in the taxable income of a SRLY subgroup that is attributable to a successor is disregarded unless the successor acquires substantially all of the assets and liabilities of its predecessor and the predecessor ceases to exist.'' The rule was intended to prevent the subgroup from inappropriately affecting the determination of its taxable income either by removing assets that would generate losses or by bringing into the subgroup income generated by members outside the subgroup.

Some commentators stated that they did not understand whether the rule was intended to require the subgroup to disregard all income of the successor, or only that income of the successor in excess of that generated by the transferred assets. In the event that all the successor's income is disregarded, commentators argued that the rule produced unduly harsh results. A particularly sympathetic case is a divisive section 351 transaction. For example, if T, a member of a SRLY subgroup, formed T1, by contributing to it one of its businesses, and T1 produced net operating losses, those losses would be included in

determining the taxable income of the subgroup. On the other hand, if T1 produced taxable income, that income would not be included in the subgroup's taxable income. If no transfer to T1 had occurred, and the business had remained in T, all of its income or loss, as the case may be, would be included in determining the subgroup's taxable income.

The Treasury and the IRS have determined that a broad rule disregarding all income contributed by the successor is necessary to avoid an unadministrable requirement that the successor's income be traced to particular assets, but that the rule should only be applied in more limited circumstances. Thus, the final regulations provide that the net positive income attributable to the successor generally is disregarded, but provide four exceptions to this rule: (A) The successor acquires substantially all of the assets and liabilities of its predecessor, and the predecessor ceases to exist; (B) the successor became a member of the SRLY subgroup at the time the subgroup was formed (e.g., the successor was organized before it and its affiliates joined the current group and thus qualifies in its own right as a subgroup member); (C) 100 percent of the stock of the successor is owned directly by corporations that were members of the SRLY subgroup when the subgroup was formed; or (D) the Commissioner determines otherwise. The IRS might, for example, publish a revenue ruling or other guidance expanding the list of exceptions if it is later determined that other circumstances should be excluded from the general rule. It is also anticipated that through the letter ruling process, the IRS will evaluate individual cases upon request and determine whether income attributable to a successor will be included in determining the subgroup's taxable income. See also § 1.1502–21(c)(2)(iv) of the regulations (an anti-abuse rule denying SRLY subgroup treatment in certain circumstances.)

Built-in Losses

Non-Corporate Transferors

Section 1.1502–15T(a) of the temporary regulations provides that solely for the purpose of determining the amount of, and the extent to which, a built-in loss is limited by the SRLY rules for the year in which it is recognized, a built-in loss is treated as a hypothetical net operating loss carryover or net capital loss arising in a SRLY, instead of as a deduction or loss in the year recognized.

Some commentators thought the rule was anomalous as applied to transfers of built-in loss assets by individuals. In their view, because a SRLY is defined only with respect to corporations (see § 1.1502–1(f)), it would be inappropriate to view a corporate transferee as a successor to a non-corporate transferor. Other commentators asserted that because the built-in loss concept is a subset of the SRLY limitations, the built-in loss rules should not apply to transfers by an individual or other non-corporate transferor to a member of a consolidated group in a section 351 transaction.

The temporary regulation does not base the determination of whether a corporation has built-in losses on any application of the predecessor and successor rule. If an asset enters the group with a built-in loss, in general, the temporary regulation deems the built-in loss to have arisen in a SRLY without regard to whether the asset was owned by a corporation when the built-in loss arose. Moreover, § 1.1502–15T(b)(2)(i) provides that in the case of an asset acquisition by a group, the assets and liabilities acquired directly from the same transferor pursuant to the same plan are treated as the assets and liabilities of a corporation that becomes a member of the group on the date of the acquisition. That corporation would generally be subject to the SRLY built-in loss rules when it becomes a member of the consolidated group. The Treasury and the IRS continue to believe that a separate tax attribute arising outside the consolidated group should not be freely absorbed within the group, regardless of where that separate attribute arose. Accordingly, these final regulations reaffirm that a built-in loss asset transferred to a group by a non-corporate transferor is subject to the SRLY rules. An example explains that for purposes of applying the SRLY limitation to that built-in loss, all of the items contributed by the acquiring member (and not just items attributable to that asset) to consolidated taxable income are taken into account.

Lonely Parent

Under § 1.1502–15T of the temporary regulations, the SRLY limitation on recognized built-in losses applies to a loss recognized by the group on an asset the common parent held prior to the formation of a group. In contrast, net operating loss carryovers of a corporation that becomes the common parent of a consolidated group are not subject to a SRLY limitation within the group under the so-called ''lonely parent'' rule (see § 1.1502–1(f)(2)(i)).

The final regulations conform the built-in loss rules to the net operating loss rules as applied in conjunction with the lonely parent rule. Therefore, a loss recognized by any member of the group on an asset that was held by the corporation that becomes the common parent when the group is formed is not subject to the SRLY rules. However, a built-in loss asset acquired by the common parent after the formation of the group remains subject to the SRLY limitation. An anti-abuse rule is also provided to apply the SRLY limitation to built-in loss assets transferred to a corporation prior to and in anticipation of the corporation becoming the common parent of a group.

For example, in Year 1, P, a stand alone corporation holds Asset 1, a built-in loss asset. In Year 3, P forms S but retains Asset 1. In Year 4, P sells Asset 1, recognizing a loss. Section 1.1502–15(f) of the final regulations provides that the loss is not subject to the SRLY limitation. Similarly if P transferred Asset 1 with an unrealized built-in loss to S, the SRLY limitation on built-in losses would not apply if S sold Asset 1 and recognized the loss. However if, after the formation of the P/S group, P acquired an asset with an unrealized built-in loss and sold the asset, recognizing that loss during the recognition period, a SRLY limitation would apply with respect to that loss.

Split Election Rule

Section 1.1502–21T(b)(3)(i) of the temporary regulations permits a consolidated group to waive the entire carryback period provided by section 172. This irrevocable election is not available on a member by member basis, but rather requires that the common parent waive the carryback period for all members of the group.

Some commentators suggested that the election be permitted on a member-by-member basis. The commentators expressed concern that requiring the whole group to waive the carryback period makes it difficult for sellers and purchasers to negotiate who gets the benefit of a post-acquisition loss. Because section 172 generally requires a carryback to the earliest year, absent the purchaser's waiver of the carryback, a seller could be required to disclose confidential tax information to the purchaser relating to the ability to use the loss carryback. In situations where such disclosure is a concern, an election to waive the loss carryback, available on a member by member basis, could ensure the separation of a particular purchaser and seller without requiring the group to waive the remaining

amount of the consolidated net operating loss carryback.

The final regulations permit taxpayers to waive, with respect to all consolidated net operating losses attributable to a member, the portion of the carryback period for which the corporation was a member of another group. If an election is made for any member, all members acquired from the same group, in the same transaction, are required to make the election. The election must be made on the timely filed original return for the year of the acquisition.

Absorption of Losses

Section 1.1502–21T(b)(1) provides general rules concerning the absorption of losses within a consolidated group. Although the rules refer to section 382(l)(2)(B), commentators stated that the absorption rules were ambiguous with respect to establishing the priority of absorption of multiple losses carried from the same taxable year if only a portion of the losses were subject to limitation under section 382. The final regulations make clear that the rule of section 382(l)(2)(B) applies, and that losses limited by section 382 are absorbed before losses from the same taxable year that are not subject to a section 382 limitation, regardless of whether such losses are attributable to the same member.

A comment was also received requesting guidance on how to determine the amount of a subgroup member's net operating loss carryover that was absorbed so that it can determine how much of the loss it retains when it leaves the group. In response to this comment, the final regulations provide that within a subgroup, losses are absorbed on a pro rata basis. Thus, when a subgroup member leaves the group, its net operating loss carryover is treated as having been absorbed on a pro rata basis, determined by comparing its initial net operating loss carryover and the subgroup's initial net operating loss carryover.

Dates of Applicability

The final regulations generally are applicable for taxable years for which the due date (without extensions) of the consolidated return is after June 25, 1999. However, there are several special effective dates, including an effective date which addresses transitional issues relating to the adoption of the rule eliminating SRLY in the event of an overlap with section 382.

Generally, if a particular attribute would not have been subject to a SRLY limitation as of June 25, 1999 if these final regulations had always been in effect, and the overlap transaction occurred after the effective date of section 382 as amended by the 1986 Tax Reform Act, then the existing SRLY limitation will not apply in taxable years for which the due date (without extensions) of the consolidated return is after June 25, 1999 (but will not be eliminated retroactively with respect to earlier taxable years).

If an existing SRLY limitation for which the cumulative register began in a taxable year prior to a taxable year for which the due date (without extensions) of the consolidated return is after June 25, 1999 would not be eliminated by the overlap rule, that SRLY limitation continues to be applied without regard to the changes applicable to the definition of SRLY subgroups (so that a member or SRLY subgroup is not forced to alter the application of a SRLY limitation in midstream). However, when corporations enter a group in a new SRLY event occurring in a taxable year for which the due date (without extensions) of the consolidated return is after June 25, 1999, the regulations apply (with respect to any overlap transactions occurring after the effective date of section 382 as amended by the 1986 Tax Reform Act) as if the final regulations had always been in effect.

Thus, for example, and assuming that all corporations are on a calendar taxable year, if a corporation S joins the P group in an overlap transaction in 1996, and the first year for which this final regulation is effective is 1999, then any losses carried by S into the P group are subject to a SRLY limitation in 1996, 1997 and 1998. However, the losses are no longer subject to a SRLY limitation within the P group starting in 1999.

If, in the above example, the M group had acquired both P and S on January 1, 1998 in a non-overlap transaction, and S carried into the M group its losses arising before it joined the P group, then, in 1998, under the temporary regulations as then in effect, those S losses would have been subject to a SRLY limitation computed with reference only to S's cumulative register. Under the special transition rule, the new regulations would not operate in 1999 or thereafter to cause S and P to constitute a SRLY subgroup in the M group with respect to those S losses, even though P and S would otherwise qualify as a SRLY subgroup with respect to those losses under the new rules. However, if the X group acquires both P and S from M in or after 1999, P and S would constitute a SRLY subgroup with respect to those S loss carryovers.

Need for Immediate Guidance

Because the temporary regulations are not applicable for taxable years ending after June 26, 1999, it is necessary to implement these final regulations without delay to ensure continuity of treatment of certain attributes and to ensure that there is no period within which the treatment of such attributes is inconsistent with the temporary regulations and these final regulations. See section 7805(e)(2). Accordingly, it is impracticable and contrary to the public interest to issue this Treasury decision subject to the effective date limitation of section 553(d) of title 5 of the United States Code (if applicable).

Special Analyses

It has been determined that this Treasury decision is not a significant regulatory action as defined in EO 12866. It is hereby certified that these regulations will not have a significant economic impact on a substantial number of small entities. This certification is based on the fact that these regulations principally affect corporations filing consolidated federal income tax returns that have carryover or carryback of certain losses from separate return limitation years. Available data indicates that many consolidated return filers are large companies (not small businesses). In addition, the data indicates that an insubstantial number of consolidated return filers that are smaller companies have loss carryovers or carrybacks that are subject to the separate return limitation year rules. Therefore, a Regulatory Flexibility Analysis under the Regulatory Flexibility Act (5 U.S.C. chapter 6) is not required. Pursuant to section 7805(f) of the Code, the notice of proposed rulemaking preceding these regulations was sent to the Small Business Administration for comment on its impact on small businesses.

Drafting Information. The principal author of these regulations is Jeffrey L. Vogel of the Office of Assistant Chief Counsel (Corporate), IRS. Other personnel from the Treasury and the IRS participated in their development.

List of Subjects

26 CFR Part 1

Income taxes, Reporting and recordkeeping requirements.

26 CFR Part 602

Reporting and recordkeeping requirements.

Adoption of Amendments to the Regulations

Accordingly, 26 CFR parts 1, 301, and 602 are amended as follows:

PART 1—INCOME TAXES

Paragraph 1. The authority citation for part 1 is amended by removing the entries for sections 1.1502–15T, 1.1502–21T, 1.1502–22T, and 1.1502–23T and adding entries in numerical order to read in part as follows:

Authority: 26 U.S.C. 7805 * * *

Section 1.1502–12 also issued under 26 U.S.C. 1502. * * *

Section 1.1502–15 also issued under 26 U.S.C. 1502. * * *

Section 1.1502–22 also issued under 26 U.S.C. 1502.

Section 1.1502–23 also issued under 26 U.S.C. 1502. * * *

Par. 2. In the list below, for each section indicated in the left column, remove the wording indicated in the middle column, and add the wording indicated in the right column.

Affected section	Remove	Add
1.469–1(h)(2)	1.1502–21T (net operating losses (temporary)), and 1.1502–22T (consolidated net capital gain and loss (temporary)).	1.1502–21 (net operating losses), and 1.1502–22 (consolidated net capital gain and loss).
1.597–2(c)(5), first sentence	1.1502–15T, 1.1502–21T, and 1.1502–22T	1.1502–15, 1.1502–21, and 1.1502–22
1.597–2(c)(5), second sentence	1.1502–15T, 1.1502–21T or 1.1502–22T	1.1502–15, 1.1502–21 or 1.1502–22.
1.597–4(g)(3), fifth sentence	1.1502–15T, 1.1502–21T and 1.1502–22T	1.1502–15, 1.1502–21 and 1.1502–22.
1.597–4(g)(3), sixth sentence	1.1502–15T, 1.1502–21T, or 1.1502–22T	1.1502–15, 1.1502–21, or 1.1502–22.
1.904(f)–3(a), first sentence	(or § 1.1502–21T(b)	(or § 1.1502–21(b).
1.904(f)–3(b), first sentence	(or § 1.1502–22T(b)	(or § 1.1502–22(b).
1.1502–2(h)	1.1502–22T) (or, for consolidated return years to which § 1.1502–22T.	1.1502–22) (or, for consolidated return years to which § 1.1502–22.
1.1502–3T(c)(2)(iii), first sentence	1.1502–21T(c)(2)	1.1502–21(c)(2).
1.1502–3T(c)(2)(iii), second sentence	1.1502–21T(f)	1.1502–21(f).
1.1502–9(a), seventh sentence	§ 1.1502–21T(b)(2)	1.1502–21(b)(2).
1.1502–9(a), eighth sentence	1.1502–21T(b)(1)	1.1502–21(b)(1).
1.1502–11(a)(2)	§ 1.1502–21T	1.1502–21.
1.1502–11(a)(3)	§ 1.1502–22T	1.1502–22.
1.1502–11(a)(4)	§ 1.1502–23T	1.1502–23.
1.1502–11(b)(2)(iii) Example 1(c), last sentence	1.1502–21T	1.1502–21.
1.1502–11(b)(2)(iii) Example 2(d), last sentence	1.1502–21T and 1.1502–22T	1.1502–21 and 1.1502–22.
1.1502–12(b)	1.1502–15T	1.1502–15.
1.1502–13(c)(7)(ii) Example 10(d), first and second sentences.	S's net operating loss carryovers are subject to the separate return limitation year (SRLY) rules. See § 1.1502–21T(c).	P's acquisition of S is not subject to the overlap rule of § 1.1502–21(g), and S's net operating loss carryovers are subject to the separate return limitation year (SRLY) rules. See § 1.1502–21(c).
1.1502–13(g)(5) Example 4(b), fourth sentence	1.1502–15T (or § 1.1502–15A, as appropriate) (limitations on the absorption of built-in losses).	1.1502–15 (as appropriate).
1.1502–13(h)(2) Example 1(a), second sentence.	1.1502–21T(c)	1.1502–21(c).
1.1502–13(h)(2) Example 1(b), first sentence	1.1502–21T(c)	1.1502–21(c).
1.1502–13(h)(2) Example 2(a), last sentence	1.1502–15T	1.1502–15.
1.1502–13(h)(2) Example 2(b), second sentence.	1.1502–22T	1.1502–22.
1.1502–20(c)(4) Example 7(iii), first sentence	1.1502–21T	1.1502–21.
1.1502–20(g)(3) Example 1(i), second sentence	1.1502–21T	1.1502–21.
1.1502–20(g)(3) Example 2(i), fourth sentence	§ 1.1502–21A or 1.1502–21T	1.1502–21A or 1.1502–21.
1.1502–23A(a), third sentence	1.1502–21T(c) and 1.1502–22T(c), as provided in § 1.1502–15T(a).	(1.1502–21T(c) in effect prior to June 25, 1999, as contained in 26 CFR part 1 revised April 1, 1999 and 1.1502–22T(c) in effect prior to June 25, 1999, as contained in 26 CFR part 1 revised April 1, 1999, as provided in 1.1502–15T(a) in effect prior to June 25, 1999, as contained in 26 CFR part 1 revised April 1, 1999) or (1.1502–21(c) and 1.1502–22(c), as provided in 1.1502–15(a), as applicable)).
1.1502–23A(b), first sentence	1.1502–21T(g)	1.1502–21(h) or 1.1502–21T(g) in effect prior to June 25, 1999, as contained in 26 CFR part 1 revised April 1, 1999, as applicable.
1.1502–23A(b), second sentence	1.1502–21T(g) for effective dates of that section.	1.1502–21(h) or 1.1502–21T(g) in effect prior to June 25, 1999, as contained in 26 CFR part 1 revised April 1, 1999, as applicable for effective dates of these sections.
1.1502–26(a)(1) concluding text	1.1502–21T(e)	1.1502–21(e).
1.1502–32(b)(5)(ii) *Example 2* (b), third sentence.	1.1502–21T(b)	1.1502–21(b).
1.1502–41A(c), first sentence	1.1502–21T(g)	1.1502–21(h) or 1.1502–21T(g) in effect prior to June 25, 1999, as contained in 26 CFR part 1 revised April 1, 1999, as applicable

Affected section	Remove	Add
1.1502–41A(c), second sentence	1.1502–21T(g) for effective dates of that section.	1.1502–21(h) or 1.1502–21T(g) in effect prior to June 25, 1999, as contained in 26 CFR part 1 revised April 1, 1999, as applicable for effective dates of these sections.
1.1502–42(f)(4)(i)(A)	1.1502–21T(b)	1.1502–21(b).
1.1502–43(b)(2)(iv)	1.1502–21T(a)	1.1502–21(a).
1.1502–43(b)(2)(v)	1.1502–22T(a)	1.1502–22(a).
1.1502–43(b)(2)(vi)(A)	1.1502–22T(a)	1.1502–22(a).
1.1502–43(b)(2)(vii)	1.1502–22T(b)	1.1502–22(b).
1.1502–43(b)(2)(viii)	1.1502–15T) and 1.1502–15T (SRLY limitation on built-in losses (temporary)).	1.1502–15) and 1.1502–15.
1.1502–44(b)(2)	§ 1.1502–21T	1.1502–21.
1.1502–44(b)(3)	§ 1.1502–22T	1.1502–22.
1.1502–47(h)(2)(i)	1.1502–21T	1.1502–21.
1.1502–47(h)(2)(ii)	1.1502–21T(e)	1.1502–21(e).
1.1502–47(h)(2)(iii),first sentence	1.1502–21T	1.1502–21.
1.1502–47(h)(2)(iv), first sentence	1.1502–21T	1.1502–21
1.1502–47(h)(3)(iii)	1.1502–21T(c)	1.1502–21(c).
1.1502–47(h)(4)(i), first sentence	1.1502–22T	1.1502–22.
1.1502–47(h)(4)(i), second sentence	1.1502–22T	1.1502–22.
1.1502–47(h)(4)(ii), first sentence	1.1502–22T	1.1502–22.
1.1502–47(h)(4)(ii), first sentence	1.1502–21T	1.1502–21.
1.1502–47(h)(4)(iii)	1.1502–22T(b)	1.1502–22(b).
1.1502–47(k)(5) introductory text	1.1502–22T	1.1502–22.
1.1502–47(l)(3)(i), second sentence	1.1502–21T	1.1502–21.
1.1502–47(m)(2)(ii), first sentence	1.1502–21T	1.1502–21.
1.1502–47(m)(2)(ii), first sentence	1.1502–22T	1.1502–22.
1.1502–47(m)(3)(i), first sentence	1.1502–21T and 1.1502–22T	1.1502–21 and 1.1502–22.
1.1502–47(m)(3)(vi)(A), second sentence	1.1502–21T(b) or 1.1502–79A(a)(3)(as appropriate).	1.1502–21(b)).
1.1502–47(m)(3)(vi)(A), second sentence	§ 1.1502–21T(b) or 1.1502–79A(a)(3)(as appropriate).	1.1502–21(b).
1.1502–47(m)(3)(vii)(A)	1.1502–21A(b)(3)(ii)	1.1502–21A(b)(3)(ii) or 1.1502–21(b).
1.1502–47(m)(3)(ix), last sentence	1.1502–15T	1.1502–15.
1.1502–47(q), last sentence	1.1502–21T	1.1502–21.
1.1502–55T(h)(4)(iii) (B)(*4*), first sentence	1.1502–21T(c)(2)	1.1502–21(c)(2).
1.1502–55T(h)(4)(iii) (B)(*4*), second sentence	1.1502–21T(f)	1.1502–21(f).
1.1502–78(a), first sentence	1.1502–21T(b), 1.1502–22T(b)	1.1502–21(b), 1.1502–22(b).
1.1502–79(a), second sentence	1.1502–21T(b)	1.1502–21(b).
1.1502–79(b), second sentence	1.1502–22T(b)	1.1502–22(b).
1.1502–79(c)(1)	1.1502–21T(b)	1.1502–21(b).
1.1502–79(d)(1)	1.1502–21T(b)	1.1502–21(b).
1.1502–79(e)(1)	1.1502–21T(b)	1.1502–21(b).
1.1502–91T(a)(2), last sentence	1.1502–21T(a)	1.1502–21(a) or 1.1502–21T(a) in effect prior to June 25, 1999, as contained in 26 CFR part 1 revised April 1, 1999, as applicable.
1.1502–91T(c)(3) *Example* (b), first sentence	1.1502–21T(c)	1.1502–21(c) or 1.1502–21T(c) in effect prior to June 25, 1999, as contained in 26 CFR part 1 revised April 1, 1999, as applicable.
1.1502–91T(d)(1)(iii)	1.1502–21T(c)	1.1502–21(c) or 1.1502–21T(c) in effect prior to June 25, 1999, as contained in 26 CFR part 1 revised April 1, 1999, as applicable.
1.1502–91T(d)(6) *Example 1*(a), fourth sentence.	1.1502–21T(b)	1.1502–21(b) or 1.1502–21T(b) in effect prior to June 25, 1999, as contained in 26 CFR part 1 revised April 1, 1999, as applicable.
1.1502–91T(d)(6) *Example 2*(a), fourth sentence.	1.1502–21T(b)	1.1502–21(b) or 1.1502–21T(b) in effect prior to June 25, 1999, as contained in 26 CFR part 1 revised April 1, 1999, as applicable.
1.1502–91T(f)(2) *Example* (a), last sentence	1.1502–21T(b)	1.1502–21(b) or 1.1502–21T(b) in effect prior to June 25, 1999, as contained in 26 CFR part 1 revised April 1, 1999, as applicable.
1.1502–92T(b)(2) *Example 3*(a), fourth sentence.	1.1502–21T(b)	1.1502–21(b) or 1.1502–21T(b) in effect prior to June 25, 1999, as contained in 26 CFR part 1 revised April 1, 1999, as applicable.
1.1502–93T(e)	1.1502–21T(c)	1.1502–21(c) or 1.1502–21T(c) in effect prior to June 25, 1999, as contained in 26 CFR part 1 revised April 1, 1999, as applicable.
1.1502–94T(a)(1)(i)	1.1502–21T(c)	1.1502–21(c) or 1.1502–21T(c) in effect prior to June 25, 1999, as contained in 26 CFR part 1 revised April 1, 1999, as applicable.
1.1502–94T(b)(4) *Example 1*(c), last sentence	1.1502–21T(c)	1.1502–21(c) or 1.1502–21T(c) in effect prior to June 25, 1999, as contained in 26 CFR part 1 revised April 1, 1999, as applicable.

Affected section	Remove	Add
1.1502–95T(b)(1)(i)	1.1502–21T(b)	1.1502–21(b) or 1.1502–21T(b) in effect prior to June 25, 1999, as contained in 26 CFR part 1 revised April 1, 1999, as applicable.
1.1502–95T(b)(4) *Example 1* (a), sixth sentence	1.1502–21T(b)	1.1502–21(b) or 1.1502–21T(b) in effect prior to June 25, 1999, as contained in 26 CFR part 1 revised April 1, 1999, as applicable.
1.1502–95T(c)(7) *Example 1* (a), fifth sentence	1.1502–21T(b)	1.1502–21(b) or 1.1502–21T(b) in effect prior to June 25, 1999, as contained in 26 CFR part 1 revised April 1, 1999, as applicable.
1.1502–96T(a)(1) introductory text	1.1502–21T(c)	1.1502–21(c) or 1.1502–21T(c) in effect prior to June 25, 1999, as contained in 26 CFR part 1 revised April 1, 1999, as applicable.
1.1502–96T(a)(2), first sentence	1.1502–21T(c)	1.1502–21(c) or 1.1502–21T(c) in effect prior to June 25, 1999, as contained in 26 CFR part 1 revised April 1, 1999, as applicable.
1.1502–96T(a)(5), first sentence	1.1502–15T and 1.1502–21T	1.1502–15 and 1.1502–21 (or § 1.1502–15T in effect prior to June 25, 1999, as contained in 26 CFR part 1 revised April 1, 1999 and 1.1502–21T in effect prior to June 25, 1999, as contained in 26 CFR part 1 revised April 1, 1999, as applicable).
1.1502–96T(b)(2)(ii)(A)	1.1502–21T(b)	1.1502–21(b) or 1.1502–21T(b) in effect prior to June 25, 1999, as contained in 26 CFR part 1 revised April 1, 1999, as applicable.
1.1502–96T(b)(2)(ii)(B)	1.1502–21T(c)	1.1502–21(c) or 1.1502–21T(c) in effect prior to June 25, 1999, as contained in 26 CFR part 1 revised April 1, 1999, as applicable.
1.1502–99T(c)(2)(i), fourth sentence	1.1502–21T(c)	1.1502–21(c) or 1.1502–21T(c) in effect prior to June 25, 1999, as contained in 26 CFR part 1 revised April 1, 1999, as applicable.
1.1502–99T(c)(2)(ii)	1.1502–21T(b)	1.1502–21(b) or 1.1502–21T(b) in effect prior to June 25, 1999, as contained in 26 CFR part 1 revised April 1, 1999, as applicable.
1.1502–100(c)(2)	§§ 1.1502–21A or 1.1502–21T	§ 1.1502–21A or 1.1502–21.
1.1503–2(d)(2)(i), last sentence	§ 1.1502–21A(c) or 1.1502–21T(c)	1.1502–21A(c) or 1.1502–21(c).
1.1503–2(d)(2)(ii), last sentence	§ 1.1502–21A(c) or 1.1502–21T(c)	1.1502–21A(c) or 1.1502–21(c).
1.1503–2(d)(4) *Example 1* (iv), last sentence	1.1502–22T(c)	1.1502–22(c).
1.1503–2(g)(2)(vii)(B)(*1*), second sentence	§ 1.1502–21A(c) or 1.1502–21T(c)	1.1502–21A(c) or 1.1502–21(c).
1.1503–2(g)(2)(vii)(B)(*2*), first sentence	§ 1.1502–21A(c) or 1.1502–21T(c)	1.1502–21A(c) or 1.1502–21(c).
1.1503–2(g)(2)(vii)(G) *Example 1*, ninth sentence.	§ 1.1502–21A(c) or 1.1502–21T(c)	1.1502–21A(c) or 1.1502–21(c).
1.1503–2(g)(2)(vii)(G) *Example 2*, last sentence	§§ 1.1502–21A(c) or 1.1502–21T(c)	§ 1.1502–21A(c) or 1.1502–21(c).
1.1503–2(h)(3), second sentence	§§ 1.1502–21A(c) or 1.1502–21T(c))	§ 1.1502–21A(c) or 1.1502–21(c).
1.1503–2A(f)(1)(i) introductory text	1.1502–21T(b)	1.1502–79A(a)(3).
1.1503–2A(f)(1)(i)(C)	1.1502–22T(b)	1.1502–22.
1.1503–2A(f)(2)(i), fourth sentence	1.1502–21T(c)	1.1502–21(c).
1.1503–2A(f)(2)(ii), last sentence	1.1502–21T(c)	1.1502–21(c).
301.6402–7(g)(2)(iii), first sentence	§ 1.1502–21T(b)	1.1502–21(b).
301.6402–7(g)(3) *Example* 2, second sentence	1.1502–21T	1.1502–21.
301.6402–7(g)(3) *Example* 2, third sentence	1.1502–21T(c)	1.1502–21(c).
301.6402–7(h)(1)(ii) *Example* (b), first sentence	1.1502–21T(b) and 1.1502–22T(b)	1.1502–21(b) and 1.1502–22(b).

Par. 3. Section 1.1502–1 is amended by revising paragraph (f)(4) to read as follows:

§ 1.1502–1 Definitions.

* * * * *

(f) * * *

(4) *Predecessor and successors.* The term *predecessor* means a transferor or distributor of assets to a member (the successor) in a transaction—

(i) To which section 381(a) applies; or

(ii) That occurs on or after January 1, 1997, in which the successor's basis for the assets is determined, directly or indirectly, in whole or in part, by reference to the basis of the assets of the transferor or distributor, but in the case of a transaction that occurs before June 25, 1999, only if the amount by which basis differs from value, in the aggregate, is material. For a transaction that occurs before June 25, 1999, only one member may be considered a predecessor to or a successor of one other member.

* * * * *

Par. 4. Section 1.1502–15 is added to read as follows:

§ 1.1502–15 SRLY limitation on built-in losses.

(a) *SRLY limitation.* Except as provided in paragraph (f) of this section (relating to built-in losses of the common parent) and paragraph (g) of this section (relating to an overlap with section 382), built-in losses are subject to the SRLY limitation under §§ 1.1502–21(c) and 1.1502–22(c) (including applicable subgroup principles). Built-in losses are treated as deductions or losses in the year recognized, except for the purpose of determining the amount of, and the extent to which the built-in loss is limited by, the SRLY limitation for the year in which it is recognized. Solely for such purpose, a built-in loss is treated as a hypothetical net operating loss carryover or net capital loss carryover arising in a SRLY, instead of as a deduction or loss in the year recognized. To the extent that a built-in loss is allowed as a deduction under

this section in the year it is recognized, it offsets any consolidated taxable income for the year before any loss carryovers or carrybacks are allowed as a deduction. To the extent not so allowed, it is treated as a separate net operating loss or net capital loss carryover or carryback arising in the year of recognition and, under § 1.1502–21(c) or 1.1502–22(c), the year of recognition is treated as a SRLY.

(b) *Built-in losses*—(1) *Defined.* If a corporation has a net unrealized built-in loss under section 382(h)(3) (as modified by this section) on the day it becomes a member of the group (whether or not the group is a consolidated group), its deductions and losses are built-in losses under this section to the extent they are treated as recognized built-in losses under section 382(h)(2)(B) (as modified by this section). This paragraph (b) generally applies separately with respect to each member, but see paragraph (c) of this section for circumstances in which it is applied on a subgroup basis.

(2) *Operating rules.* Solely for purposes of applying paragraph (b)(1) of this section, the principles of § 1.1502–94(c) apply with appropriate adjustments, including the following:

(i) *Stock acquisition.* A corporation is treated as having an ownership change under section 382(g) on the day the corporation becomes a member of a group, and no other events (e.g., a subsequent ownership change under section 382(g) while it is a member) are treated as causing an ownership change.

(ii) *Asset acquisition.* In the case of an asset acquisition by a group, the assets and liabilities acquired directly from the same transferor (whether corporate or non-corporate, foreign or domestic) pursuant to the same plan are treated as the assets and liabilities of a corporation that becomes a member of the group (and has an ownership change) on the date of the acquisition.

(iii) *Recognized built-in gain or loss.* A loss that is included in the determination of net unrealized built-in gain or loss and that is recognized but disallowed or deferred (e.g., under § 1.1502–20 or section 267) is not treated as a built-in loss unless and until the loss would be allowed during the recognition period without regard to the application of this section. Section 382(h)(1)(B)(ii) does not apply to the extent it limits the amount of recognized built-in loss that may be treated as a pre-change loss to the amount of the net unrealized built-in loss.

(c) *Built-in losses of subgroups*—(1) *In general.* In the case of a subgroup, the principles of paragraph (b) of this section apply to the subgroup, and not separately to its members. Thus, the net unrealized built-in loss and recognized built-in loss for purposes of paragraph (b) of this section are based on the aggregate amounts for each member of the subgroup.

(2) *Members of subgroups.* A subgroup is composed of those members that have been continuously affiliated with each other for the 60 consecutive month period ending immediately before they become members of the group in which the loss is recognized. A member remains a member of the subgroup until it ceases to be affiliated with the loss member. For this purpose, the principles of § 1.1502–21(c)(2)(iv) through (vi) apply with appropriate adjustments.

(3) *Coordination of 60 month affiliation requirement with the overlap rule.* If one or more corporations become members of a group and are included in the determination of a net unrealized built-in loss that is subject to the overlap rule described in paragraph (g)(1) of this section, then for purposes of paragraph (c)(2) of this section, such corporations that become members of the group are treated as having been affiliated for 60 consecutive months with the common parent of the group and are also treated as having been affiliated with any other members who have been affiliated or are treated as having been affiliated with the common parent at such time. The corporations are treated as having been affiliated with such other members for the same period of time that those members have been affiliated or are treated as having been affiliated with the common parent. If two or more corporations become members of the group at the same time, but this paragraph (c)(3) does not apply to every such corporation, then immediately after the corporations become members of the group, and solely for purposes of paragraph (c)(2) of this section, the corporations to which this paragraph (c)(3) applies are treated as having not been previously affiliated with the corporations to which this paragraph (c)(3) does not apply. If the common parent has become the common parent of an existing group within the previous five year period in a transaction described in § 1.1502–75(d)(2)(ii) or (3), the principles of §§ 1.1502–91(g)(6) and 1.1502–96(a)(2)(iii) shall apply.

(4) *Built-in amounts.* Solely for purposes of determining whether the subgroup has a net unrealized built-in loss or whether it has a recognized built-in loss, the principles of § 1.1502–91(g) and (h) apply with appropriate adjustments.

(d) *Examples.* For purposes of the examples in this section, unless otherwise stated, all groups file consolidated returns, all corporations have calendar taxable years, the facts set forth the only corporate activity, value means fair market value and the adjusted basis of each asset equals its value, all transactions are with unrelated persons, and the application of any limitation or threshold under section 382 is disregarded. The principles of this section are illustrated by the following examples:

Example 1. Determination of recognized built-in loss. (i) Individual A owns all of the stock of P and T. T has two depreciable assets. Asset 1 has an unrealized loss of $55 (basis $75, value $20), and asset 2 has an unrealized gain of $20 (basis $30, value $50). P acquires all the stock of T from Individual A during Year 1, and T becomes a member of the P group. P's acquisition of T is not an ownership change as defined by section 382(g). Paragraph (g) of this section does not apply because there is not an overlap of the application of the rules contained in paragraph (a) of this section and section 382.

(ii) Under paragraph (b)(2)(i) of this section, and solely for purposes of applying paragraph (b)(1) of this section, T is treated as having an ownership change under section 382(g) on becoming a member of the P group. Under paragraph (b)(1) of this section, none of T's $55 of unrealized loss is treated as a built-in loss unless T has a net unrealized built-in loss under section 382(h)(3) on becoming a member of the P group.

(iii) Under section 382(h)(3)(A), T has a $35 net unrealized built-in loss on becoming a member of the P group (($55)+$20=($35)). Assume that this amount exceeds the threshold requirement in section 382(h)(3)(B). Under section 382(h)(2)(B), the entire amount of T's $55 unrealized loss is treated as a built-in loss to the extent it is recognized during the 5-year recognition period described in section 382(h)(7). Under paragraph (b)(2)(iii) of this section, the restriction under section 382(h)(1)(B)(ii), which limits the amount of recognized built-in loss that is treated as pre-change loss to the amount of the net unrealized built-in loss, is inapplicable for this purpose. Consequently, the entire $55 of unrealized loss (not just the $35 net unrealized loss) is treated under paragraph (b)(1) of this section as a built-in loss to the extent it is recognized within 5 years of T's becoming a member of the P group. Under paragraph (a) of this section, a built-in loss is subject to the SRLY limitation under § 1.1502–21(c)(1).

(iv) Under paragraph (b)(2)(ii) of this section, the built-in loss would similarly be subject to a SRLY limitation under § 1.1502–21(c)(1) if T transferred all of its assets and liabilities to a subsidiary of the P group in a single transaction described in section 351. To the extent the built-in loss is recognized within 5 years of T's transfer, all of the items contributed by the acquiring subsidiary to consolidated taxable income (and not just the items attributable to the assets and liabilities transferred by T) are included for purposes

of determining the SRLY limitation under § 1.1502–21(c)(1).

Example 2. Actual application of section 382 not relevant. (i) Individual A owns all of the stock of P, and Individual B owns all of the stock of T. T has two depreciable assets. Asset 1 has an unrealized loss of $25 (basis $75, value $50), and asset 2 has an unrealized gain of $20 (basis $30, value $50). P buys 55 percent of the stock of T in January of Year 1, resulting in an ownership change of T under section 382(g). During March of Year 2, P buys the 45 percent balance of the T stock, and T becomes a member of the P group.

(ii) Although T has an ownership change for purposes of section 382 in Year 1 and not Year 2, T's joining the P group in Year 2 is treated as an ownership change under section 382(g) solely for purposes of this section. Consequently, for purposes of this section, whether T has a net unrealized built-in loss under section 382(h)(3) is determined as if the day T joined the P group were a change date.

Example 3. Determination of a recognized built-in loss of a subgroup. (i) Individual A owns all of the stock of P, S, and M. P and M are each common parents of a consolidated group. During Year 1, P acquires all of the stock of S from Individual A, and S becomes a member of the P group. P's acquisition of S is not an ownership change as defined by section 382(g). At the beginning of Year 7, M acquires all of the stock of P from Individual A, and P and S become members of the M group. M's acquisitions of P and S are also not ownership changes as defined by section 382(g). At the time of M's acquisition of the P stock, P has (disregarding the stock of S) a $10 net unrealized built-in gain (two depreciable assets, asset 1 with a basis of $35 and a value of $55, and asset 2 with a basis of $55 and a value of $45), and S has a $75 net unrealized built-in loss (two depreciable assets, asset 3 with a basis of $95 and a value of $10, and asset 4 with a basis of $10 and a value of $20).

(ii) Under paragraph (c) of this section, P and S compose a subgroup on becoming members of the M group because P and S were continuously affiliated for the 60 month period ending immediately before they became members of the M group. Consequently, paragraph (b) of this section does not apply to P and S separately. Instead, their separately computed unrealized gains and losses are aggregated for purposes of determining whether, and the extent to which, any unrealized loss is treated as built-in loss under this section and is subject to the SRLY limitation under § 1.1502–21(c).

(iii) Under paragraph (c) of this section, the P subgroup has a net unrealized built-in loss on the day P and S become members of the M group, determined by treating the day they become members as a change date. The net unrealized built-in loss is the aggregate of P's net unrealized built-in gain of $10 and S's net unrealized built-in loss of $75, or an aggregate net unrealized built-in loss of $65. (The stock of S owned by P is disregarded for purposes of determining the net unrealized built-in loss. However, any loss allowed on the sale of the stock within the recognition period is taken into account in determining recognized loss.) Assume that the $65 net unrealized built-in loss exceeds the threshold requirement under section 382(h)(3)(B).

(iv) Under paragraphs (b)(1), (b)(2)(iii), and (c) of this section, a loss recognized during the 5-year recognition period on an asset of P or S held on the day that P and S became members of the M group is a built-in loss except to the extent the group establishes that such loss exceeds the amount by which the adjusted basis of such asset on the day the member became a member exceeded the fair market value of such asset on that same day. If P sells asset 2 for $45 in Year 7 and recognizes a $10 loss, the entire $10 loss is treated as a built-in loss under paragraphs (b)(2)(iii) and (c) of this section. If S sells asset 3 for $10 in Year 7 and recognizes an $85 loss, the entire $85 loss is treated as a built-in loss under paragraphs (b)(2)(iii) and (c) of this section (not just the $55 balance of the P subgroup's $65 net unrealized built-in loss).

(v) The determination of whether P and S constitute a SRLY subgroup for purposes of loss carryovers and carrybacks, and the extent to which built-in losses are not allowed under the SRLY limitation, is made under § 1.1502–21(c).

Example 4. Computation of SRLY limitation. (i) Individual A owns all of the stock of P, the common parent of a consolidated group. During Year 1, Individual A forms T by contributing $300 and T sustains a $100 net operating loss. During Year 2, T's assets decline in value to $100. At the beginning of Year 3, P acquires all the stock of T from Individual A, and T becomes a member of the P group with a net unrealized built-in loss of $100. P's acquisition of T is not an ownership change as defined by section 382(g). Assume that $100 exceeds the threshold requirements of section 382(h)(3)(B). During Year 3, T recognizes its unrealized built-in loss as a $100 ordinary loss. The members of the P group contribute the following net income to the consolidated taxable income of the P group (disregarding T's recognized built-in loss and any consolidated net operating loss deduction under § 1.1502–21) for Years 3 and 4:

	Year 3	Year 4	Total
P group (without T)	$100	$100	$200
T	60	40	100
CTI	160	140	300

(ii) Under paragraph (b) of this section, T's $100 ordinary loss in Year 3 (not taken into account in the consolidated taxable income computations above) is a built-in loss. Under paragraph (a) of this section, the built-in loss is treated as a net operating loss carryover for purposes of determining the SRLY limitation under § 1.1502–21(c).

(iii) For Year 3, § 1.1502–21(c) limits T's $100 built-in loss and $100 net operating loss carryover from Year 1 to the aggregate of the P group's consolidated taxable income through Year 3, determined by reference to only T's items. For this purpose, consolidated taxable income is determined without regard to any consolidated net operating loss deductions under § 1.1502–21(a).

(iv) The P group's consolidated taxable income through Year 3 is $60 when determined by reference to only T's items. Under § 1.1502–21(c), the SRLY limitation for Year 3 is therefore $60.

(v) Under paragraph (a) of this section, the $100 built-in loss is treated as a current deduction for all purposes other than determination of the SRLY limitation under § 1.1502–21(c). Consequently, a deduction for the built-in loss is allowed in Year 3 before T's loss carryover from Year 1 is allowed, but only to the extent of the $60 SRLY limitation. None of T's Year 1 loss carryover is allowed because the built-in loss ($100) exceeds the SRLY limitation for Year 3.

(vi) The $40 balance of the built-in loss that is not allowed in Year 3 because of the SRLY limitation is treated as a $40 net operating loss arising in Year 3 that is carried to other years in accordance with the rules of § 1.1502–21(b). The $40 net operating loss is treated under paragraph (a) of this section and § 1.1502–21(c)(1)(ii) as a loss carryover or carryback from Year 3 that arises in a SRLY, and is subject to the rules of § 1.1502–21 (including § 1.1502–21(c)) rather than this section. See also § 1.1502–21(c)(1)(iii) *Example 4.*

(vii) The facts are the same as in paragraphs (i) through (vi) of this *Example 4,* except that T has an additional built-in loss when it joins the P group which is recognized in Year 4. For purposes of determining the SRLY limitation for these additional losses in Year 4 (or any subsequent year), the $60 of built-in loss allowed as a deduction in Year 3 is treated under paragraph (a) of this section as a deduction in Year 3 that reduces the P group's consolidated taxable income when determined by reference to only T's items.

Example 5. Built-in loss exceeding consolidated taxable income in the year recognized. (i) Individual A owns all of the stock of P and T. During Year 1, P acquires all the stock of T from Individual A, and T becomes a member of the P group. P's acquisition of T was not an ownership change as defined by section 382(g). At the time of acquisition, T has a noncapital asset with an unrealized loss of $45 (basis $100, value $55), which exceeds the threshold requirements of section 382(h)(3)(B). During Year 2, T sells its asset for $55 and recognizes the unrealized built-in loss. The P group has $10 of consolidated taxable income in Year 2, computed by disregarding T's recognition of the $45 built-in loss and the consolidated net operating loss deduction, while the consolidated taxable income would be $25 if determined by reference to only T's items (other than the $45 loss).

(ii) T's $45 loss is recognized in Year 2 and, under paragraph (b) of this section, constitutes a built-in loss. Under paragraph (a) of this section and § 1.1502–21(c)(1)(ii), the loss is treated as a net operating loss carryover to Year 2 for purposes of applying the SRLY limitation under § 1.1502–21(c).

(iii) For Year 2, T's SRLY limitation is the aggregate of the P group's consolidated taxable income through Year 2 determined by

reference to only T's items. For this purpose, consolidated taxable income is determined by disregarding any built-in loss that is treated as a net operating loss carryover, and any consolidated net operating loss deductions under § 1.1502–21(a). Consolidated taxable income so determined is $25.

(iv) Under § 1.1502–21(c), $25 of the $45 built-in loss could be deducted in Year 2. Because the P group has only $10 of consolidated taxable income (determined without regard to the $45), the $25 loss creates a consolidated net operating loss of $15. This loss is carried back or forward under the rules of § 1.1502–21(b) and absorbed under the rules of § 1.1502–21(a). This loss is not treated as arising in a SRLY (see § 1.1502–21(c)(1)(ii)) and therefore is not subject to the SRLY limitation under § 1.1502–21(c) in any consolidated return year of the group to which it is carried. The remaining $20 is treated as a loss carryover arising in a SRLY and is subject to the limitation of § 1.1502–21(c) in the year to which it is carried.

(e) *Predecessors and successors.* For purposes of this section, any reference to a corporation or member includes, as the context may require, a reference to a successor or predecessor, as defined in § 1.1502–1(f)(4).

(f) *Built-in losses recognized by common parent of group—(1) General rule.* Paragraph (a) of this section does not apply to any loss recognized by the group on an asset held by the common parent on the date the group is formed. Following an acquisition described in § 1.1502–75(d)(2) or (3), references to the common parent are to the corporation that was the common parent immediately before the acquisition.

(2) *Anti-avoidance rule.* If a corporation that becomes a common parent of a group acquires assets with a net unrealized built-in loss in excess of the threshold requirement of section 382(h)(3)(B) (and thereby increases its net unrealized built-in loss or decreases its net unrealized built-in gain) prior to, and in anticipation of, the formation of the group, paragraph (f)(1) of this section does not apply.

(g) *Overlap with section 382*—(1) *General rule.* The limitations provided in §§ 1.1502–21(c) and 1.1502–22(c) do not apply to recognized built-in losses or to loss carryovers or carrybacks attributable to recognized built-in losses when the application of paragraph (a) of this section results in an overlap with the application of section 382.

(2) *Definitions*—(i) *Generally.* For purposes of this paragraph (g), the definitions and nomenclature contained in section 382, the regulations thereunder, and §§ 1.1502–90 through 1.1502–99 apply.

(ii) *Overlap*—(A) An overlap of the application of paragraph (a) of this section and the application of section 382 with respect to built-in losses occurs if a corporation becomes a member of a consolidated group (the SRLY event) within six months of the change date of an ownership change giving rise to a section 382(a) limitation that would apply with respect to the corporation's recognized built-in losses (the section 382 event). Except as provided in paragraph (g)(3) of this section, application of the overlap rule does not require that the size and composition of the corporation's net unrealized built-in loss is the same on the date of the section 382 event and the SRLY event.

(B) For special rules in the event that there is a SRLY subgroup and/or a loss subgroup as defined in § 1.1502–91(d)(2) with respect to built-in losses, see paragraph (g)(4) of this section.

(3) *Operating rules*—(i) *Section 382 event before SRLY event.* If a SRLY event occurs on the same date as a section 382 event or within the six month period beginning on the date of the section 382 event, paragraph (g)(1) of this section applies beginning with the tax year that includes the SRLY event. Paragraph (g)(1) of this section does not apply, however, if a corporation that would otherwise be subject to the overlap rule acquires assets from a person other than a member of the group with a net unrealized built-in loss in excess of the threshold requirement of section 382(h)(3)(B) (and thereby increases its net unrealized built-in loss) after the section 382 event, and before the SRLY event.

(ii) *SRLY event before section 382 event.* If a section 382 event occurs within the period beginning the day after the SRLY event and ending six months after the SRLY event, paragraph (g)(1) of this section applies starting with the first tax year that begins after the section 382 event. However, paragraph (g)(1) of this section does not apply at any time if a corporation that otherwise would be subject to paragraph (g)(1) of this section transfers assets with an unrealized built-in loss to another member of the group after the SRLY event, but before the section 382 event, unless the corporation recognizes the built-in loss upon the transfer.

(4) *Subgroup rules.* In general, in the case of built-in losses for which there is a SRLY subgroup and the corporations joining the group at the time of the SRLY event also constitute a loss subgroup (as defined in § 1.1502–91(d)(2)), the principles of this paragraph (g) apply to the SRLY subgroup, and not separately to its members. However, paragraph (g)(1) of this section applies with respect to built-in losses only if—

(i) all members of the SRLY subgroup with respect to those built-in losses are also included in a loss subgroup; and

(ii) all members of a loss subgroup are also members of a SRLY subgroup with respect to those built-in losses.

(5) *Asset acquisitions.* Notwithstanding the application of this paragraph (g), paragraph (a) of this section applies to asset acquisitions by the corporation that occurs after the latter of the SRLY event and the section 382 event. See, paragraph (b)(2)(ii) of this section.

(6) *Examples.* The principles of this paragraph (g) are illustrated by the following examples:

Example 1. Determination of subgroup. (i) Individual A owns all of the stock of P, P1, and S. In Year 1, P acquires all of the stock of P1, and they file a consolidated return. In Year 3, P acquires all of the stock of S, and S joins the P group. Individual B, unrelated to Individual A, owns all of the stock of M and K, each the common parent of a consolidated group. Individual C, unrelated to either Individual A or Individual B, owns all of the stock of T.

(ii) At the beginning of Year 7, M acquires all of the stock of P from Individual A, and, as a result, P, P1, and S become members of the M group. At the time of M's acquisition of the P stock, P has a $15 net unrealized built-in loss (disregarding the stock of P1), P1 has a net unrealized built-in gain of $10, and S has a net unrealized built-in gain of $5.

(iii) During Year 8, M acquires all of the stock of T, and T joins the M group. At the time of M's acquisition of the T stock, T had an unrealized built-in loss of $15. At the beginning of Year 9, K acquires all of the stock of M from Individual B, and the members of the M consolidated group including P, P1, S, and T become members of the K group. At the time of K's acquisition of the M stock, M has (disregarding the stock of P and T) a $15 net unrealized built-in loss, P has a $20 net unrealized built-in loss (disregarding the stock of P1), P1 has a net unrealized built-in gain of $5, S has a net unrealized built-in loss of $35, and T has a $15 net unrealized built-in loss.

(iv) M's acquisition of P in Year 7 results in P, P1, and S becoming members of the M group (the SRLY event). Under paragraph (c) of this section, P and P1 compose a SRLY built-in loss subgroup because they have been affiliated for the 60 consecutive month period immediately preceding joining the M group. S is not a member of the subgroup because on becoming a member of the M group it had not been continuously affiliated with P and P1 for the 60 month period ending immediately before it became a member of the M group. Consequently, § 1.1502–15 applies to S separately from the P and P1 subgroup.

(v) Assuming that the $5 net unrealized built-in loss of the P/P1 subgroup exceeds the threshold requirement under section 382(h)(3)(B), M's acquisition of P resulted in an ownership change of P and P1 within the

meaning of section 382(g) that subjects P and P1 to a limitation under section 382(a) (the section 382 event). Because, with respect to P and P1, the SRLY event and the change date of the section 382 event occur on the same date and because the loss subgroup and SRLY subgroup are coextensive, there is an overlap of the application of the SRLY rules and the application of the section 382.

(vi) S was not a loss corporation because it did not have a net operating loss carryover, or a net unrealized built-in loss, and therefore, M's acquisition of P did not result in an ownership change of S within the meaning of section 382(g). S, therefore is not subject to the overlap rule of paragraph (g) of this section.

(vii) M's acquisition of T resulted in T becoming a member of the M group (the SRLY event). Assuming that T's $15 net unrealized built-in loss exceeds the threshold requirement under section 382(h)(3)(B), M's acquisition of T also resulted in an ownership change of T within the meaning of section 382(g) that subjects T to a limitation under section 382(a) (the section 382 event). Because, with respect to T, the SRLY event and the change date of the section 382 event occur on the same date, there is an overlap of the application of the SRLY rules and the application of section 382 within the meaning of paragraph (g) of this section.

(viii) K's acquisition of M results in the members of the M consolidated group, including T, P, P1, and S, becoming members of the K group (the SRLY event). Because T, P, and P1 were each included in the determination of a net unrealized built-in loss that was subject to the overlap rule described in paragraph (g)(1) of this section when they each became members of the M group, they are deemed under paragraph (c)(3) of this section to have been continuously affiliated with M for the 60 month period ending immediately before becoming a member of the M group, notwithstanding their actual affiliation history. As a result, M, T, P, and P1 compose a SRLY built-in loss subgroup under paragraph (c)(2) of this section. K's acquisition of M is not subject to paragraph (g) of this section because it does not result in a section 382 event.

(ix) S, however, is not a member of the subgroup under paragraph (c)(2) of this section. Because S was not included in the determination of a net unrealized built-in loss that was subject to the overlap rule described in paragraph (g)(1) of this section when it joined the M group, S is treated as becoming an affiliate of M on the date it joined the M group. Furthermore, under paragraph (c)(3) of this section, S is deemed to have begun its affiliation with P and P1 on the date it joined the M group. Consequently, § 1.1502–15 applies to S separately to the extent its built-in loss is recognized with the recognition period.

Example 2. Post-overlap acquisition of assets. (i) Individual A owns all of the stock of P, the common parent of a consolidated group. B, an individual unrelated to Individual A, owns all of the stock of T. T has two depreciable assets. Asset 1 has an unrealized built-in loss of $25 (basis $75, value $50), and asset 2 has an unrealized built-in gain of $20 (basis $30, value $50). During Year 3, P buys all of the stock of T from Individual B. On January 1, Year 4, P contributes $80 cash and Individual A contributes asset 3, a depreciable asset, with a net unrealized built-in loss of $45 (basis $65, value $20), in exchange for T stock in a transaction that is described in section 351.

(ii) P's acquisition of T results in T becoming a member of the P group (the SRLY event) and also results in an ownership change of T, within the meaning of section 382(g), that gives rise to a limitation under section 382(a) (the section 382 event).

(iii) Because the SRLY event and the change date of the section 382 event occur on the same date, there is an overlap of the application of the SRLY rules and the application of section 382. Consequently, under paragraph (g) of this section, the limitation under paragraph (a) of this section does not apply to T's net unrealized built-in loss when it joined the P group.

(iv) Individual A's Year 4 contribution of a depreciable asset occurred after T was a member of the P group. Assuming that the amount of the net unrealized built-in loss exceeds the threshold requirement of section 382(h)(3)(B), the sale of asset 3 within the recognition period is subject to the SRLY limitation of paragraphs (a) and (b)(2)(ii) of this section.

Example 3. Overlap rule. (i) Individual A owns all of the stock of P, the common parent of a consolidated group. B, an individual unrelated to Individual A, owns all of the stock of T. T has two depreciable assets. Asset 1 has an unrealized loss of $55 (basis $75, value $20), and asset 2 has an unrealized gain of $30 (basis $30, value $60). On February 28 of Year 2, P purchases 55% of T from Individual B. On June 30, of Year 2, P purchases an additional 35% of T from Individual B.

(ii) The February 28 purchase of 55% of T is a section 382 event because it results in an ownership change of T that gives rise to a section 382(a) limitation. The June 30 purchase of 35% of T results in T becoming a member of the P group and is therefore a SRLY event.

(iii) Because the SRLY event occurred within six months of the change date of the section 382 event, there is an overlap of the application of the SRLY rules and the application of section 382, and paragraph (a) of this section does not apply. Therefore, the SRLY limitation does not apply to any of the $55 loss in asset 1 recognized by T after T joined the P group. See § 1.1502–94 for rules relating to the application of section 382 with respect to T's $25 unrealized built-in loss.

Example 4. Overlap rule-Fluctuation in value. (i) The facts are the same as in *Example 3*, except that by June 30, of Year 2, asset 1 had declined in value by a further $10. Thus asset 1 had an unrealized loss of $65 (basis $75, value $10), and asset 2 had an unrealized gain of $30 (basis $30, value $60).

(ii) Because paragraph (a) of this section does not apply, the further decrease in asset 1's value is disregarded. Consequently, the results are the same as in *Example 3*.

(h) *Effective date*—(1) *In general.* This section generally applies to built-in losses recognized in taxable years for which the due date (without extensions) of the consolidated return is after June 25, 1999. However—

(i) In the event that paragraphs (f)(1) and (g)(1) of this section do not apply to a particular built-in loss in the current group, then solely for purposes of applying paragraph (a) of this section to determine a limitation with respect to that built-in loss and with respect to which the SRLY register (consolidated taxable income determined by reference to only the member's (or subgroup's) items of income, gain, deduction or loss) began in a taxable year for which the due date of the return was on or before June 25, 1999, paragraph (c)(3) of this section shall not apply; and

(ii) For purposes of paragraph (g) of this section, only an ownership change to which section 382(a) as amended by the Tax Reform Act of 1986 applies shall constitute a section 382 event.

(2) *Prior periods.* For certain taxable years ending on or before June 25, 1999, see § 1.1502–15T in effect prior to June 25, 1999, as contained in 26 CFR part 1 revised April 1, 1999, as applicable.

§ 1.1502–15T [Removed]

Par. 5. Section 1.1502–15T is removed.

Par. 6. Section 1.1502–21 is added to read as follows:

§ 1.1502–21 Net operating losses.

(a) *Consolidated net operating loss deduction.* The consolidated net operating loss deduction (or CNOL deduction) for any consolidated return year is the aggregate of the net operating loss carryovers and carrybacks to the year. The net operating loss carryovers and carrybacks consist of—

(1) Any CNOLs (as defined in paragraph (e) of this section) of the consolidated group; and

(2) Any net operating losses of the members arising in separate return years.

(b) *Net operating loss carryovers and carrybacks to consolidated return and separate return years.* Net operating losses of members arising during a consolidated return year are taken into account in determining the group's CNOL under paragraph (e) of this section for that year. Losses taken into account in determining the CNOL may be carried to other taxable years (whether consolidated or separate) only under this paragraph (b).

(1) *Carryovers and carrybacks generally.* The net operating loss carryovers and carrybacks to a taxable year are determined under the

principles of section 172 and this section. Thus, losses permitted to be absorbed in a consolidated return year generally are absorbed in the order of the taxable years in which they arose, and losses carried from taxable years ending on the same date, and which are available to offset consolidated taxable income for the year, generally are absorbed on a pro rata basis. Additional rules provided under the Internal Revenue Code or regulations also apply. See, e.g., section 382(l)(2)(B) (if losses are carried from the same taxable year, losses subject to limitation under section 382 are absorbed before losses that are not subject to limitation under section 382). See *Example 2* of paragraph (c)(1)(iii) of this section for an illustration of pro rata absorption of losses subject to a SRLY limitation.

(2) *Carryovers and carrybacks of CNOLs to separate return years*—(i) *In general.* If any CNOL that is attributable to a member may be carried to a separate return year of the member, the amount of the CNOL that is attributable to the member is apportioned to the member (apportioned loss) and carried to the separate return year. If carried back to a separate return year, the apportioned loss may not be carried back to an equivalent, or earlier, consolidated return year of the group; if carried over to a separate return year, the apportioned loss may not be carried over to an equivalent, or later, consolidated return year of the group. For rules permitting the reattribution of losses of a subsidiary to the common parent when loss is disallowed on the disposition of subsidiary stock, see § 1.1502–20(g).

(ii) *Special rules*—(A) *Year of departure from group.* If a corporation ceases to be a member during a consolidated return year, net operating loss carryovers attributable to the corporation are first carried to the consolidated return year, and only the amount so attributable that is not absorbed by the group in that year is carried to the corporation's first separate return year. For rules concerning a member departing a subgroup, see paragraph (c)(2)(vii) of this section.

(B) *Offspring rule.* In the case of a member that has been a member continuously since its organization (determined without regard to whether the member is a successor to any other corporation), the CNOL attributable to the member is included in the carrybacks to consolidated return years before the member's existence. If the group did not file a consolidated return for a carryback year, the loss may be carried back to a separate return year of the common parent under paragraph (b)(2)(i) of this section, but only if the common parent was not a member of a different consolidated group or of an affiliated group filing separate returns for the year to which the loss is carried or any subsequent year in the carryback period. Following an acquisition described in § 1.1502–75(d)(2) or (3), references to the common parent are to the corporation that was the common parent immediately before the acquisition.

(iii) *Equivalent years.* Taxable years are equivalent if they bear the same numerical relationship to the consolidated return year in which a CNOL arises, counting forward or backward from the year of the loss. For example, in the case of a member's third taxable year (which was a separate return year) that preceded the consolidated return year in which the loss arose, the equivalent year is the third consolidated return year preceding the consolidated return year in which the loss arose. See paragraph (b)(3)(iii) of this section for certain short taxable years that are disregarded in making this determination.

(iv) *Amount of CNOL attributable to a member.* The amount of a CNOL that is attributable to a member is determined by a fraction the numerator of which is the separate net operating loss of the member for the year of the loss and the denominator of which is the sum of the separate net operating losses for that year of all members having such losses. For this purpose, the separate net operating loss of a member is determined by computing the CNOL by reference to only the member's items of income, gain, deduction, and loss, including the member's losses and deductions actually absorbed by the group in the taxable year (whether or not absorbed by the member).

(v) *Examples.* For purposes of the examples in this section, unless otherwise stated, all groups file consolidated returns, all corporations have calendar taxable years, the facts set forth the only corporate activity, value means fair market value and the adjusted basis of each asset equals its value, all transactions are with unrelated persons, and the application of any limitation or threshold under section 382 is disregarded. The principles of this paragraph (b)(2) are illustrated by the following examples:

Example 1. Offspring rule. (i) During Year 1, Individual A forms P and T, and they each file a separate return. P forms S on March 15 of Year 2, and P and S file a consolidated return. P acquires all the stock of T from Individual A at the beginning of Year 3, and T becomes a member of the P group. P's acquisition of T is not an ownership change within the meaning of section 382. P, S, and T sustain a $1,100 CNOL in Year 3 and, under paragraph (b)(2)(iv) of this section, the loss is attributable $200 to P, $300 to S, and $600 to T.

(ii) Of the $1,100 CNOL in Year 3, the $500 amount of the CNOL that is attributable to P and S ($200 + $300) may be carried to P's separate return in Year 1. Even though S was not in existence in Year 1, the $300 amount of the CNOL attributable to S may be carried back to P's separate return in Year 1 because S (unlike T) has been a member of the P group since its organization and P is a qualified parent under paragraph (b)(2)(ii)(B) of this section. To the extent not absorbed in that year, the loss may then be carried to the P group's return in Year 2. The $600 amount of the CNOL attributable to T is a net operating loss carryback to T's separate return in Year 1, and if not absorbed in Year 1, then to Year 2.

Example 2. Departing members. (i) The facts are the same as in *Example 1.* In addition, on June 15 of Year 4, P sells all the stock of T. The P group's consolidated return for Year 4 includes the income of T through June 15. T files a separate return for the period from June 16 through December 31.

(ii) $600 of the Year 3 CNOL attributable to T is apportioned to T and is carried back to its separate return in Year 1. To the extent the $600 is not absorbed in T's separate return in Year 1 or Year 2, it is carried to the consolidated return in Year 4 before being carried to T's separate return in Year 4. Any portion of the loss not absorbed in T's Year 1 or Year 2 or in the P group's Year 4 is then carried to T's separate return in Year 4.

Example 3. Offspring rule following acquisition. (i) Individual A owns all of the stock of P, the common parent of a consolidated group. In Year 1, B, an individual unrelated to Individual A, forms T. P acquires all of the stock of T at the beginning of Year 3, and T becomes a member of the P group. The P group has $200 of consolidated taxable income in Year 2, and $300 of consolidated taxable income in Year 3 (computed without regard to the CNOL deduction). At the beginning of Year 4, T forms a subsidiary, Y, in a transaction described in section 351. The P group has a $300 consolidated net operating loss in Year 4, and under paragraph (b)(2)(iv) of this section, the loss is attributable entirely to Y.

(ii) Even though Y was not in existence in Year 2, $300, the amount of the consolidated net operating loss attributable to Y, may be carried back to the P group's Year 2 consolidated return under paragraph (b)(2)(ii)(B) of this section because Y has been a member of the P group since its organization. To the extent not absorbed in that year, the loss may then be carried to the P group's consolidated return in Year 3.

(3) *Special rules*—(i) *Election to relinquish carryback.* A group may make an irrevocable election under section 172(b)(3) to relinquish the entire carryback period with respect to a CNOL for any consolidated return year. Except as provided in paragraph (b)(3)(ii)(B) of this section, the election may not be made separately for any

member (whether or not it remains a member), and must be made in a separate statement entitled ''THIS IS AN ELECTION UNDER SECTION 1.1502–21(b)(3)(i) TO WAIVE THE ENTIRE CARRYBACK PERIOD PURSUANT TO SECTION 172(b)(3) FOR THE [insert consolidated return year] CNOLs OF THE CONSOLIDATED GROUP OF WHICH [insert name and employer identification number of common parent] IS THE COMMON PARENT.'' The statement must be signed by the common parent and filed with the group's income tax return for the consolidated return year in which the loss arises.

(ii) *Special elections*—(A) *Groups that include insolvent financial institutions.* For rules applicable to relinquishing the entire carryback period with respect to losses attributable to insolvent financial institutions, see § 301.6402–7 of this chapter.

(B) *Acquisition of member from another consolidated group.* If one or more members of a consolidated group becomes a member of another consolidated group, the acquiring group may make an irrevocable election to relinquish, with respect to all consolidated net operating losses attributable to the member, the portion of the carryback period for which the corporation was a member of another group, provided that any other corporation joining the acquiring group that was affiliated with the member immediately before it joined the acquiring group is also included in the waiver. This election is not a yearly election and applies to all losses that would otherwise be subject to a carryback to a former group under section 172. The election must be made in a separate statement entitled ''THIS IS AN ELECTION UNDER SECTION 1.1502–21(b)(3)(ii)(B) TO WAIVE THE PRE-[insert first taxable year for which the member (or members) was not a member of another group] CARRYBACK PERIOD FOR THE CNOLs attributable to [insert names and employer identification number of members].'' The statement must be filed with the acquiring consolidated group's original income tax return for the year the corporation (or corporations) became a member, and it must be signed by the common parent and each of the members to which it applies.

(iii) *Short years in connection with transactions to which section 381(a) applies.* If a member distributes or transfers assets to a corporation that is a member immediately after the distribution or transfer in a transaction to which section 381(a) applies, the transaction does not cause the distributor or transferor to have a short year within the consolidated return year of the group in which the transaction occurred that is counted as a separate year for purposes of determining the years to which a net operating loss may be carried.

(iv) *Special status losses.* [Reserved]

(c) *Limitations on net operating loss carryovers and carrybacks from separate return limitation years*—(1) *SRLY limitation*—(i) *General rule.* Except as provided in paragraph (g) of this section (relating to an overlap with section 382), the aggregate of the net operating loss carryovers and carrybacks of a member arising (or treated as arising) in SRLYs that are included in the CNOL deductions for all consolidated return years of the group under paragraph (a) of this section may not exceed the aggregate consolidated taxable income for all consolidated return years of the group determined by reference to only the member's items of income, gain, deduction, and loss. For this purpose—

(A) Consolidated taxable income is computed without regard to CNOL deductions;

(B) Consolidated taxable income takes into account the member's losses and deductions (including capital losses) actually absorbed by the group in consolidated return years (whether or not absorbed by the member);

(C) In computing consolidated taxable income, the consolidated return years of the group include only those years, including the year to which the loss is carried, that the member has been continuously included in the group's consolidated return, but exclude—

(*1*) For carryovers, any years ending after the year to which the loss is carried; and

(*2*) For carrybacks, any years ending after the year in which the loss arose; and

(D) The treatment under § 1.1502–15 of a built-in loss as a hypothetical net operating loss carryover in the year recognized is solely for purposes of determining the limitation under this paragraph (c) with respect to the loss in that year and not for any other purpose. Thus, for purposes of determining consolidated taxable income for any other losses, a built-in loss allowed under this section in the year it arises is taken into account.

(ii) *Losses treated as arising in SRLYs.* If a net operating loss carryover or carryback did not arise in a SRLY but is attributable to a built-in loss (as defined under § 1.1502–15), the carryover or carryback is treated for purposes of this paragraph (c) as arising in a SRLY if the built-in loss was not allowed, after application of the SRLY limitation, in the year it arose. For an illustration, see § 1.1502–15(d), *Example 5.* But see § 1.1502–15(g)(1).

(iii) *Examples.* The principles of this paragraph (c)(1) are illustrated by the following examples:

Example 1. Determination of SRLY limitation. (i) Individual A owns P. In Year 1, Individual A forms T, and T sustains a $100 net operating loss that is carried forward. P acquires all the stock of T at the beginning of Year 2, and T becomes a member of the P group. The P group has $300 of consolidated taxable income in Year 2 (computed without regard to the CNOL deduction). Such consolidated taxable income would be $70 if determined by reference to only T's items.

(ii) T's $100 net operating loss carryover from Year 1 arose in a SRLY. See § 1.1502–1(f)(2)(iii). P's acquisition of T was not an ownership change as defined by section 382(g). Thus, the $100 net operating loss carryover is subject to the SRLY limitation in paragraph (c)(1) of this section. The SRLY limitation for Year 2 is consolidated taxable income determined by reference to only T's items, or $70. Thus, $70 of the loss is included under paragraph (a) of this section in the P group's CNOL deduction for Year 2.

(iii) The facts are the same as in paragraph (i) of this *Example 1,* except that such consolidated taxable income (computed without regard to the CNOL deduction and by reference to only T's items) for Year 2 is a loss (a CNOL) of $370. Because the SRLY limitation may not exceed the consolidated taxable income determined by reference to only T's items, and such items aggregate to a CNOL, T's $ 100 net operating loss carryover from Year 1 is not allowed under the SRLY limitation in Year 2. Moreover, if consolidated taxable income (computed without regard to the CNOL deduction and by reference to only T's items) did not exceed $370 in Year 3, the carryover would still be restricted under paragraph (c) of this section in Year 3, because the aggregate consolidated taxable income for all consolidated return years of the group computed by reference to only T's items would not be a positive amount.

Example 2. Net operating loss carryovers. (i) In Year 1, Individual A forms P, and P sustains a $40 net operating loss that is carried forward. P has no income in Year 2. Individual A also owns T which sustains a net operating loss of $50 in Year 2 that is carried forward. P acquires the stock of T from Individual A during Year 3, but T is not a member of the P group for each day of the year. P and T file separate returns and sustain net operating losses of $120 and $60, respectively, for Year 3. The P group files consolidated returns beginning in Year 4. During Year 4, the P group has $160 of consolidated taxable income (computed without regard to the CNOL deduction). Such consolidated taxable income would be $70 if determined by reference to only T's items. These results are summarized as follows:

	Separate	Separate	Separate/affiliated	Consolidated
	Year 1	Year 2	Year 3	Year 4
P	$ (40)	$0	$ (120)	$90
T	0	(50)	(60)	70
CTI				160

(ii) P's Year 1, Year 2, and Year 3 are not SRLYs with respect to the P group. See § 1.1502–1(f)(2)(i). Thus, P's $40 net operating loss arising in Year 1 and $120 net operating loss arising in Year 3 are not subject to the SRLY limitation under paragraph (c) of this section. Under the principles of section 172, paragraph (b) of this section requires that the loss arising in Year 1 be the first loss absorbed by the P group in Year 4. Absorption of this loss leaves $120 of the group's consolidated taxable income available for offset by other loss carryovers.

(iii) T's Year 2 and Year 3 are SRLYs with respect to the P group. See § 1.1502–1(f)(2)(ii). P's acquisition of T was not an ownership change as defined by section 382(g). Thus, T's $50 net operating loss arising in Year 2 and $60 net operating loss arising in Year 3 are subject to the SRLY limitation. Under paragraph (c)(1) of this section, the SRLY limitation for Year 4 is $70, and under paragraph (b) of this section, T's $50 loss from Year 2 must be included under paragraph (a) of this section in the P group's CNOL deduction for Year 4. The absorption of this loss leaves $70 of the group's consolidated taxable income available for offset by other loss carryovers.

(iv) P and T each carry over net operating losses to Year 4 from a taxable year ending on the same date (Year 3). The losses carried over from Year 3 total $180. Under paragraph (b) of this section, the losses carried over from Year 3 are absorbed on a pro rata basis, even though one arises in a SRLY and the other does not. However, the group cannot absorb more than $20 of T's $60 net operating loss arising in Year 3 because its $70 SRLY limitation for Year 4 is reduced by T's $50 Year 2 SRLY loss already included in the CNOL deduction for Year 4. Thus, the absorption of Year 3 losses is as follows:

Amount of P's Year 3 losses absorbed = $120/($120 + $20) × $70 = $60.

Amount of T's Year 3 losses absorbed = $20/($120 + $20) × $70 = $10.

(v) The absorption of $10 of T's Year 3 loss further reduces T's SRLY limitation to $10 ($70 of initial SRLY limitation, reduced by the $60 net operating loss already included in the CNOL deductions for Year 4 under paragraph (a) of this section).

(vi) P carries its remaining $60 Year 3 net operating loss and T carries its remaining $50 Year 3 net operating loss over to Year 5. Assume that, in Year 5, the P group has $90 of consolidated taxable income (computed without regard to the CNOL deduction). The group's CTI determined by reference to only T's items is a CNOL of $4. For Year 5, the CNOL deduction is $66, which includes $60 of P's Year 3 loss and $6 of T's Year 3 loss (the aggregate consolidated taxable income for Years 4 and 5 determined by reference to T's items, or $66, reduced by T's SRLY losses actually absorbed by the group in Year 4, or $60).

Example 3. Net operating loss carrybacks. (i) P owns all of the stock of S and T. The members of the P group contribute the following to the consolidated taxable income of the P group for Years 1, 2, and 3:

	Year 1	Year 2	Year 3	Total
P	$100	$60	$80	$240
S	20	20	30	70
T	30	10	(50)	(10)
CTI	150	90	60	300

(ii) P sells all of the stock of T to Individual A at the beginning of Year 4. For its Year 4 separate return year, T has a net operating loss of $30.

(iii) T's Year 4 is a SRLY with respect to the P group. See § 1.1502–1(f)(1). T's $30 net operating loss carryback to the P group from Year 4 is not allowed under paragraph (c) of this section to be included in the CNOL deduction under paragraph (a) of this section for Year 1, 2, or 3, because the P group's consolidated taxable income would not be a positive amount if determined by reference to only T's items for all consolidated return years through Year 4 (without regard to the $30 net operating loss). The $30 loss is carried forward to T's Year 5 and succeeding taxable years as provided under the Internal Revenue Code.

Example 4. Computation of SRLY limitation for built-in losses treated as net operating loss carryovers. (i) Individual A owns P. In Year 1, Individual A forms T by contributing $300 and T sustains a $100 net operating loss. During Year 2, T's assets decline in value by $100. At the beginning of Year 3, P acquires all the stock of T from Individual A, and T becomes a member of the P group in a transaction that does not result in an ownership change under section 382(g). At the time of the acquisition, T has a $100 net unrealized built-in loss, which exceeds the threshold requirements of section 382(h)(3)(B). During Year 3, T recognizes its unrealized loss as a $100 ordinary loss. The members of the P group contribute the following to the consolidated taxable income of the P group for Years 3 and 4 (computed without regard to T's recognition of its unrealized loss and any CNOL deduction under this section):

	Year 3	Year 4	Total
P group (without T)	$100	$100	$200
T	60	40	100
CTI	160	140	300

(ii) Under § 1.1502–15(a), T's $100 of ordinary loss in Year 3 constitutes a built-in loss that is subject to the SRLY limitation under paragraph (c) of this section. The amount of the limitation is determined by treating the deduction as a net operating loss carryover from a SRLY. The built-in loss is therefore subject to a $60 SRLY limitation for Year 3. The built-in loss is treated as a net operating loss carryover solely for purposes of determining the extent to which the loss is not allowed by reason of the SRLY limitation, and for all other purposes the loss remains a loss arising in Year 3. Consequently, under paragraph (b) of this section, the $60 allowed under the SRLY limitation is absorbed by the P group before T's $100 net operating loss carryover from Year 1 is allowed.

(iii) Under § 1.1502–15(a), the $40 balance of the built-in loss that is not allowed in Year 3 because of the SRLY limitation is treated as a $40 net operating loss arising in Year 3 that is subject to the SRLY limitation because, under paragraph (c)(1)(ii) of this section, Year 3 is treated as a SRLY, and is carried to other years in accordance with the rules of paragraph (b) of this section. The SRLY limitation for Year 4 is the P group's consolidated taxable income for Year 3 and Year 4 determined by reference to only T's items and without regard to the group's CNOL deductions ($60 + $40), reduced by T's loss actually absorbed by the group in Year 3 ($60). The SRLY limitation for Year 4 is $40.

(iv) Under paragraph (c) of this section and the principles of section 172(b), $40 of T's $100 net operating loss carryover from Year 1 is included in the CNOL deduction under paragraph (a) of this section in Year 4.

Example 5. Dual SRLY registers and accounting for SRLY losses actually absorbed. (i) In Year 1, T sustains a $ 100 net operating loss and a $50 net capital loss. At the beginning of Year 2, T becomes a member of the P group in a transaction that does not result in an ownership change under section 382(g). Both of T's carryovers from Year 1 are subject to SRLY limits under this paragraph (c) and § 1.1502–22(c). The members of the P group contribute the following to the consolidated taxable income for Years 2 and 3 (computed without regard to T's CNOL deduction under this section or net capital loss carryover under § 1.1502–22):

	P	T
Year 1 (SRLY)		
Ordinary	.....	(100)
Capital	.....	(50)
Year 2		
Ordinary	30	60
Capital	0	(20)
Year 3		
Ordinary	10	40
Capital	0	30

(ii) For Year 2, the group computes separate SRLY limits for each of T's SRLY carryovers from Year 1. The group determines its ability to use its capital loss carryover before it determines its ability to use its ordinary loss carryover. Under section 1212, because the group has no Year 2 capital gain, it cannot absorb any capital losses in Year 2. T's Year 1 net capital loss and the group's Year 2 consolidated net capital loss (all of which is attributable to T) are carried over to Year 3.

(iii) Under this section, the aggregate amount of T's $100 net operating loss carryover from Year 1 that may be included in the CNOL deduction of the group for Year 2 may not exceed $60—the amount of the consolidated taxable income computed by reference only to T's items, including losses and deductions to the extent actually absorbed (i.e., $60 of T's ordinary income for Year 2). Thus, the group may include $60 of T's ordinary loss carryover from Year 1 in its Year 2 CNOL deduction. T carries over its remaining $40 of its Year 1 loss to Year 3.

(iv) For Year 3, the group again computes separate SRLY limits for each of T's SRLY carryovers from Year 1. The group has consolidated net capital gain (without taking into account a net capital loss carryover deduction) of $30. Under § 1.1502–22(c), the aggregate amount of T's $50 capital loss carryover from Year 1 that may be included in computing the group's consolidated net capital gain for all years of the group (here Years 2 and 3) may not exceed $30 (the aggregate consolidated net capital gain computed by reference only to T's items, including losses and deductions actually absorbed (i.e., $30 of capital gain in Year 3)). Thus, the group may include $30 of T's Year 1 capital loss carryover in its computation of consolidated net capital gain for Year 3, which offsets the group's capital gains for Year 3. T carries over its remaining $20 of its Year 1 loss to Year 4. The group carries over the Year 2 consolidated net capital loss to Year 4.

(v) Under this section, the aggregate amount of T's net operating loss carryover from Year 1 that may be included in the CNOL deduction of the group for Years 2 and 3 may not exceed $100, which is the amount of the aggregate consolidated taxable income for Years 2 and 3 determined by reference only to T's items, including losses and deductions actually absorbed (i.e., $60 of ordinary income in Year 2 plus $40 of ordinary income, $30 of capital gain, and $30 of SRLY capital losses actually absorbed in Year 3). The group included $60 of T's ordinary loss carryover in its Year 2 CNOL deduction. It may include the remaining $40 of the carryover in its Year 3 CNOL deduction.

(2) *SRLY subgroup limitation.* In the case of a net operating loss carryover or carryback for which there is a SRLY subgroup, the principles of paragraph (c)(1) of this section apply to the SRLY subgroup, and not separately to its members. Thus, the contribution to consolidated taxable income and the net operating loss carryovers and carrybacks arising (or treated as arising) in SRLYs that are included in the CNOL deductions for all consolidated return years of the group under paragraph (a) of this section are based on the aggregate amounts of income, gain, deduction, and loss of the members of the SRLY subgroup for the relevant consolidated return years (as provided in paragraph (c)(1)(i)(C) of this section). For an illustration of aggregate amounts during the relevant consolidated return years following the year in which a member of a SRLY subgroup ceases to be a member of the group, see paragraph (c)(2)(viii) *Example 4* of this section. A SRLY subgroup may exist only for a carryover or carryback arising in a year that is not a SRLY (and is not treated as a SRLY under paragraph (c)(1)(ii) of this section) with respect to another group (the former group), or for a carryover that was subject to the overlap rule described in paragraph (g) of this section or § 1.1502–15(g) with respect to another group (the former group). A separate SRLY subgroup is determined for each such carryover or carryback. A consolidated group may include more than one SRLY subgroup and a member may be a member of more than one SRLY subgroup. Solely for purposes of determining the members of a SRLY subgroup with respect to a loss:

(i) *Carryovers.* In the case of a carryover, the SRLY subgroup is composed of the member carrying over the loss (the loss member) and each other member that was a member of the former group that becomes a member of the group at the same time as the loss member. A member remains a member of the SRLY subgroup until it ceases to be affiliated with the loss member. The aggregate determination described in paragraph (c)(1) of this section and this paragraph (c)(2) includes the amounts of income, gain, deduction, and loss of each member of the SRLY subgroup for the consolidated return years during which it remains a member of the SRLY subgroup. For an illustration of the aggregate determination of a SRLY subgroup, see paragraph (c)(2)(viii) *Example 2* of this section.

(ii) *Carrybacks.* In the case of a carryback, the SRLY subgroup is composed of the member carrying back the loss (the loss member) and each other member of the group from which the loss is carried back that has been continuously affiliated with the loss member from the year to which the loss is carried through the year in which the loss arises.

(iii) *Built-in losses.* In the case of a built-in loss, the SRLY subgroup is composed of the member recognizing the loss (the loss member) and each other member that was part of the subgroup with respect to the loss determined under § 1.1502–15(c)(2) immediately before the members became members of the group. The principles of paragraphs (c)(2) (i) and (ii) of this section apply to determine the SRLY subgroup for the built-in loss that is, under paragraph (c)(1)(ii) of this section, treated as arising in a SRLY with respect to the group in which the loss is recognized. For this purpose and as the context requires, a reference in paragraphs (c)(2) (i) and (ii) of this section to a group or former group is a reference to the subgroup determined under § 1.1502–15(c)(2).

(iv) *Principal purpose of avoiding or increasing a SRLY limitation.* The members composing a SRLY subgroup are not treated as a SRLY subgroup if any of them is formed, acquired, or availed of with a principal purpose of avoiding the application of, or increasing any limitation under, this paragraph (c). Any member excluded from a SRLY subgroup, if excluded with a principal purpose of so avoiding or increasing any SRLY limitation, is treated as included in the SRLY subgroup.

(v) *Coordination with other limitations.* This paragraph (c)(2) does not allow a net operating loss to offset income to the extent inconsistent with other limitations or restrictions on the use of losses, such as a limitation based on the nature or activities of members. For example, any dual consolidated loss

may not reduce the taxable income to an extent greater than that allowed under section 1503(d) and § 1.1503–2. See also § 1.1502–47(q) (relating to preemption of rules for life-nonlife groups).

(vi) *Anti-duplication.* If the same item of income or deduction could be taken into account more than once in determining a limitation under this paragraph (c), or in a manner inconsistent with any other provision of the Internal Revenue Code or regulations incorporating this paragraph (c), the item of income or deduction is taken into account only once and in such manner that losses are absorbed in accordance with the ordering rules in paragraph (b) of this section and the underlying purposes of this section.

(vii) *Corporations that leave a SRLY subgroup.* If a loss member ceases to be affiliated with a SRLY subgroup, the amount of the member's remaining SRLY loss from a specific year is determined by multiplying the aggregate of the unabsorbed net operating loss carryovers of the SRLY subgroup from that year by a fraction, the numerator of which is the net operating loss carryover for that year that the member leaving the subgroup had when it became a member of the group, and the denominator of which is the aggregate of the net operating loss carryovers of the members of the SRLY subgroup for that year when they joined the group. The unabsorbed net operating loss carryovers of the SRLY subgroup are those carryovers that have not been absorbed by the group as of the end of the taxable year in which the loss member leaves the group.

(viii) *Examples.* The principles of this paragraph (c)(2) are illustrated by the following examples:

Example 1. Members of SRLY subgroups. (i) Individual A owns all of the stock of P, S, T and M. P and M are each common parents of a consolidated group. During Year 1, P sustains a $50 net operating loss. At the beginning of Year 2, P acquires all the stock of S at a time when the aggregate basis of S's assets exceeds their aggregate value by $70 and S becomes a member of the P group. At the beginning of Year 3, P acquires all the stock of T, T has a $60 net operating loss carryover at the time of the acquisition, and T becomes a member of the P group. During Year 4, S forms S1 and T forms T1, each by contributing assets with built-in gains which are, in the aggregate, material. S1 and T1 become members of the P group. During Year 7, M acquires all of the stock of P, and the members of the P group become members of the M group for the balance of Year 7. The $50 and $60 loss carryovers of P and T are carried to Year 7 of the M group, and the value and basis of S's assets did not change after it became a member of the former P group. None of the transactions described above resulted in an ownership change under section 382(g).

(ii) Under paragraph (c)(2) of this section, a separate SRLY subgroup is determined for each loss carryover and built-in loss. In the P group, P's $50 loss carryover is not treated as arising in a SRLY. See § 1.1502–1(f). Consequently, the carryover is not subject to limitation under paragraph (c) of this section in the P group.

(iii) In the M group, P's $50 loss carryover is treated as arising in a SRLY and is subject to the limitation under paragraph (c) of this section. A SRLY subgroup with respect to that loss is composed of members which were members of the P group, the group as to which the loss was not a SRLY. The SRLY subgroup is composed of P, the member carrying over the loss, and each other member of the P group that became a member of the M group at the same time as P. A member of the SRLY subgroup remains a member until it ceases to be affiliated with P. For Year 7, the SRLY subgroup is composed of P, S, T, S1, and T1.

(iv) In the P group, S's $70 unrealized loss, if recognized within the 5-year recognition period after S becomes a member of the P group, is subject to limitation under paragraph (c) of this section. See § 1.1502–15 and paragraph (c)(1)(ii) of this section. Because S was not continuously affiliated with P, T, or T1 for 60 consecutive months prior to joining the P group, these corporations cannot be included in a SRLY subgroup with respect to S's unrealized loss in the P group. See paragraph (c)(2)(iii) of this section. As a successor to S, S1 is included in a subgroup with S in the P group, and because 100 percent of S1's stock is owned directly by corporations that were members of the SRLY subgroup when the members of the SRLY subgroup became members of the P group, its net positive income is not excluded from the consolidated taxable income of the P group that may be offset by the built-in loss. See paragraph (f) of this section.

(v) In the M group, S's $70 unrealized loss, if recognized within the 5-year recognition period after S becomes a member of the M group, is subject to limitation under paragraph (c) of this section. Prior to becoming a member of the M group, S had been continuously affiliated with P (but not T or T1) for 60 consecutive months and S1 is a successor that has remained continuously affiliated with S. Those members had a net unrealized built-in loss immediately before they became members of the group under § 1.1502–15(c). Consequently, in Year 7, S, S1, and P compose a subgroup in the M group with respect to S's unrealized loss. Because S1 was a member of the SRLY subgroup when it became a member of the M group and also because 100 percent of S1's stock is owned directly by corporations that were members of the SRLY subgroup when the members of the SRLY subgroup became members of the M group its net positive income is not excluded from the consolidated taxable income of the M group that may be offset by the recognized built-in loss. See paragraph (f) of this section.

(vi) In the P group, T's $60 loss carryover arose in a SRLY and is subject to limitation under paragraph (c) of this section. P, S, and S1 were not members of the group in which T's loss arose and T's loss carryover was not subject to the overlap rule described in paragraph (g) of this section with respect to the P group (the former group). Thus, P, S, and S1 are not members of a SRLY subgroup with respect to the T carryover in the P group. See paragraph (c)(2)(i) of this section. As a successor to T, T1 is included in a SRLY subgroup with T in the P group; and, because 100 percent of T1's stock is owned directly by corporations that were members of the SRLY subgroup when the members of the SRLY subgroup became members of the P group, its net positive income is not excluded from the consolidated taxable income of the P group that may be offset by the carryover. See paragraph (f) of this section.

(vii) In the M group, T's $60 loss carryover arose in a SRLY and is subject to limitation under paragraph (c) of this section. T and T1 remain the only members of a SRLY subgroup with respect to the carryover. Because T1 was a member of the SRLY subgroup when it became a member of the M group and also because 100 percent of T1's stock is owned directly by corporations that were members of the SRLY subgroup when the members of the SRLY subgroup became members of the M group, its net positive income is not excluded from the consolidated taxable income of the M group that may be offset by the carryover. See paragraph (f) of this section.

Example 2. Computation of SRLY subgroup limitation. (i) Individual A owns all of the stock of S, T, P and M. P and M are each common parents of a consolidated group. In Year 2, P acquires all the stock of S and T from Individual A, and S and T become members of the P group. For Year 3, the P group has a $45 CNOL, which is attributable to P, and which P carries forward. M is the common parent of another group. At the beginning of Year 4, M acquires all of the stock of P and the former members of the P group become members of the M group. None of the transactions described above resulted in an ownership change under section 382(g).

(ii) P's year to which the loss is attributable, Year 3, is a SRLY with respect to the M group. See § 1.1502–1(f)(1). However, P, S, and T compose a SRLY subgroup with respect to the Year 3 loss under paragraph (c)(2)(i) of this section because Year 3 is not a SRLY (and is not treated as a SRLY) with respect to the P group. P's loss is carried over to the M group's Year 4 and is therefore subject to the SRLY subgroup limitation in paragraph (c)(2) of this section.

(iii) In Year 4, the M group has $10 of consolidated taxable income (computed without regard to the CNOL deduction for Year 4). Such consolidated taxable income would be $45 if determined by reference to only the items of P, S, and T, the members included in the SRLY subgroup with respect to P's loss carryover. Therefore, the SRLY subgroup limitation under paragraph (c)(2) of this section for P's net operating loss carryover from Year 3 is $45. Because the M group has only $10 of consolidated taxable income in Year 4, however, only $10 of P's

net operating loss carryover is included in the CNOL deduction under paragraph (a) of this section in Year 4.

(iv) In Year 5, the M group has $100 of consolidated taxable income (computed without regard to the CNOL deduction for Year 5). Neither P, S, nor T has any items of income, gain, deduction, or loss in Year 5. Although the members of the SRLY subgroup do not contribute to the $100 of consolidated taxable income in Year 5, the SRLY subgroup limitation for Year 5 is $35 (the sum of SRLY subgroup consolidated taxable income of $45 in Year 4 and $0 in Year 5, less the $10 net operating loss carryover actually absorbed by the M group in Year 4). Therefore, $35 of P's net operating loss carryover is included in the CNOL deduction under paragraph (a) of this section in Year 5.

Example 3. Inclusion in more than one SRLY subgroup. (i) Individual A owns all of the stock of S, T, P and M. S, P and M are each common parents of a consolidated group. At the beginning of Year 1, S acquires all the stock of T from Individual A, and T becomes a member of the S group. For Year 1, the S group has a CNOL of $10, all of which is attributable to S and is carried over to Year 2. At the beginning of Year 2, P acquires all the stock of S, and S and T become members of the P group. For Year 2, the P group has a CNOL of $35, all of which is attributable to P and is carried over to Year 3. At the beginning of Year 3, M acquires all of the stock of P and the former members of the P group become members of the M group. None of the transactions described above resulted in an ownership change under section 382(g).

(ii) P's and S's net operating losses arising in SRLYs with respect to the M group are subject to limitation under paragraph (c) of this section. P, S, and T compose a SRLY subgroup for purposes of determining the limitation for P's $35 net operating loss carryover arising in Year 2 because, under paragraph (c)(2)(i) of this section, Year 2 is not a SRLY with respect to the P group. Similarly, S and T compose a SRLY subgroup for purposes of determining the limitation for S's $10 net operating loss carryover arising in Year 1 because Year 1 is not a SRLY with respect to the S group.

(iii) S and T are members of both the SRLY subgroup with respect to P's losses and the SRLY subgroup with respect to S's losses. Under paragraph (c)(2) of this section, S's and T's items cannot be included in the determination of the SRLY subgroup limitation for both SRLY subgroups for the same consolidated return year; paragraph (c)(2)(vi) of this section requires the M group to consider the items of S and T only once so that the losses are absorbed in the order of the taxable years in which they were sustained. Because S's loss was incurred in Year 1, while P's loss was incurred in Year 2, the items will be added in the determination of the consolidated taxable income of the S and T SRLY subgroup to enable S's loss to be absorbed first. The taxable income of the P, S, and T SRLY subgroup is then computed by including the consolidated taxable income for the S and T SRLY subgroup less the amount of any net operating loss carryover of S that is absorbed after applying this section to the S subgroup for the year.

Example 4. Corporation ceases to be affiliated with a SRLY subgroup. (i) Individual A owns all of the stock of P and M. P and S are members of the P group and the P group has a CNOL of $30 in Year 1, all of which is attributable to P and carried over to Year 2. At the beginning of Year 2, M acquires all of the stock of P, and P and S become members of the M group. P and S compose a SRLY subgroup with respect to P's net operating loss carryover. For Year 2, consolidated taxable income of the M group determined by reference to only the items of P (and without regard to the CNOL deduction for Year 2) is $40. However, such consolidated taxable income of the M group determined by reference to the items of both P and S is a loss of $20. Thus, the SRLY subgroup limitation under paragraph (c)(2) of this section prevents the M group from including any of P's net operating loss carryover in the CNOL deduction under paragraph (a) of this section in Year 2, and P carries the Year 1 loss to Year 3.

(ii) At the end of Year 2, P sells all of the S stock and S ceases to be a member of the M group and the P subgroup. For Year 3, consolidated taxable income of the M group is $50 (determined without regard to the CNOL deduction for Year 3), and such consolidated taxable income would be $10 if determined by reference to only items of P. However, the limitation under paragraph (c) of this section for Year 3 for P's net operating loss carryover still prevents the M group from including any of P's loss in the CNOL deduction under paragraph (a) of this section. The limitation results from the inclusion of S's items for Year 2 in the determination of the SRLY subgroup limitation for Year 3 even though S ceased to be a member of the M group (and the P subgroup) at the end of Year 2. Thus, the M group's consolidated taxable income determined by reference to only the SRLY subgroup members' items for all consolidated return years of the group through Year 3 (determined without regard to the CNOL deduction) is not a positive amount.

(ix) *Application to other than loss carryovers.* Paragraph (g) of this section and the phrase ''or for a carryover that was subject to the overlap rule described in paragraph (g) of this section or § 1.1502–15(g) with respect to another group (the former group)'' in paragraph (c)(2) of this section apply only to net operating loss carryovers and net capital loss carryovers, and not with respect to other tax attributes, such as credits. Accordingly, as the context may require, if another regulation references this section and such other regulation does not concern net operating loss carryovers or net capital loss carryovers, then such reference does not include a reference to such paragraph or phrase.

(d) *Coordination with consolidated return change of ownership limitation and transactions subject to old section 382*—(1) *Consolidated return changes of ownership.* If a consolidated return change of ownership occurred before January 1, 1997, the principles of § 1.1502–21A(d) apply to determine the amount of the aggregate of the net operating losses attributable to old members of the group that may be included in the consolidated net operating loss deduction under paragraph (a) of this section. For this purpose, § 1.1502–1(g) is applied by treating that date as the end of the year of change.

(2) *Old section 382.* The principles of § 1.1502–21A(e) apply to disallow or reduce the amount of a net operating loss carryover of a member as a result of a transaction subject to old section 382.

(e) *Consolidated net operating loss.* Any excess of deductions over gross income, as determined under § 1.1502–11(a) (without regard to any consolidated net operating loss deduction), is also referred to as the consolidated net operating loss (or CNOL).

(f) *Predecessors and successors*—(1) *In general.* For purposes of this section, any reference to a corporation, member, common parent, or subsidiary, includes, as the context may require, a reference to a successor or predecessor, as defined in § 1.1502–1(f)(4).

(2) *Limitation on SRLY subgroups*—(i) *General rule.* Except as provided in paragraph (f)(2)(ii) of this section, if a successor's items of income and gain exceed the successor's items of deduction and loss (net positive income), then the net positive income attributable to the successor is excluded from the computation of the consolidated taxable income of a SRLY subgroup.

(ii) *Exceptions.* A successor's net positive income is not excluded from the consolidated taxable income of a SRLY subgroup if—

(A) The successor acquires substantially all the assets and liabilities of its predecessor and the predecessor ceases to exist;

(B) The successor was a member of the SRLY subgroup when the SRLY subgroup members became members of the group;

(C) 100 percent of the stock of the successor is owned directly by corporations that were members of the SRLY subgroup when the SRLY subgroup members became members of the group; or

(D) The Commissioner so determines.

(g) *Overlap with section 382*—(1) *General rule.* The limitation provided in paragraph (c) of this section does not apply to net operating loss carryovers (other than a hypothetical carryover

described in paragraph (c)(1)(i)(D) of this section and a carryover described in paragraph (c)(1)(ii) of this section) when the application of paragraph (c) of this section results in an overlap with the application of section 382. For a similar rule applying in the case of net operating loss carryovers described in paragraphs (c)(1)(i)(D) and (c)(1)(ii) of this section, see § 1.1502–15(g).

(2) *Definitions*—(i) *Generally.* For purposes of this paragraph (g), the definitions and nomenclature contained in section 382, the regulations thereunder, and §§ 1.1502–90 through 1.1502–99 apply.

(ii) *Overlap.* (A) An overlap of the application of paragraph (c) of this section and the application of section 382 with respect to a net operating loss carryover occurs if a corporation becomes a member of a consolidated group (the SRLY event) within six months of the change date of an ownership change giving rise to a section 382(a) limitation with respect to that carryover (the section 382 event).

(B) If an overlap described in paragraph (g)(2)(ii)(A) of this section occurs with respect to net operating loss carryovers of a corporation whose SRLY event occurs within the six month period beginning on the date of a section 382 event, then an overlap is treated as also occurring with respect to that corporation's net operating loss carryover that arises within the period beginning with the section 382 event and ending with the SRLY event.

(C) For special rules in the event that there is a SRLY subgroup and/or a loss subgroup as defined in § 1.1502–91(d)(1) with respect to a carryover, see paragraph (g)(4) of this section.

(3) *Operating rules*—(i) *Section 382 event before SRLY event.* If a SRLY event occurs on the same date as a section 382 event or within the six month period beginning on the date of the section 382 event, paragraph (g)(1) of this section applies beginning with the tax year that includes the SRLY event.

(ii) *SRLY event before section 382 event.* If a section 382 event occurs within the period beginning the day after the SRLY event and ending six months after the SRLY event, paragraph (g)(1) of this section applies starting with the first tax year that begins after the section 382 event.

(4) *Subgroup rules.* In general, in the case of a net operating loss carryover for which there is a SRLY subgroup and a loss subgroup (as defined in § 1.1502–91(d)(1)), the principles of this paragraph (g) apply to the SRLY subgroup, and not separately to its members. However, paragraph (g)(1) of this section applies—

(i) With respect to a carryover described in paragraph (g)(2)(ii)(A) of this section only if—

(A) All members of the SRLY subgroup with respect to that carryover are also included in a loss subgroup with respect to that carryover; and

(B) All members of a loss subgroup with respect to that carryover are also members of a SRLY subgroup with respect to that carryover; and

(ii) With respect to a carryover described in paragraph (g)(2)(ii) (B) of this section only if all members of the SRLY subgroup for that carryover are also members of a SRLY subgroup that has net operating loss carryovers described in paragraph (g)(2)(ii)(A) of this section that are subject to the overlap rule of paragraph (g)(1) of this section.

(5) *Examples.* The principles of this paragraph (g) are illustrated by the following examples:

Example 1. Overlap—Simultaneous Acquisition. (i) Individual A owns all of the stock of P, which in turn owns all of the stock of S. P and S file a consolidated return. In Year 2, B, an individual unrelated to Individual A, forms T which incurs a $100 net operating loss for that year. At the beginning of Year 3, S acquires T.

(ii) S's acquisition of T results in T becoming a member of the P group (the SRLY event) and also results in an ownership change of T, within the meaning of section 382(g), that gives rise to a limitation under section 382(a) (the section 382 event) with respect to the T carryover.

(iii) Because the SRLY event and the change date of the section 382 event occur on the same date, there is an overlap of the application of the SRLY rules and the application of section 382.

(iv) Consequently, under this paragraph (g), in Year 3 the SRLY limitation does not apply to the Year 2 $100 net operating loss.

Example 2. Overlap—Section 382 event before SRLY event. (i) Individual A owns all of the stock of P, which in turn owns all of the stock of S. P and S file a consolidated return. In Year 1, B, an individual unrelated to Individual A, forms T which incurs a $100 net operating loss for that year. On February 28 of Year 2, S purchases 55% of T from Individual B. On June 30, of Year 2, S purchases an additional 35% of T from Individual B.

(ii) The February 28 purchase of 55% of T is a section 382 event because it results in an ownership change of T, under section 382(g), that gives rise to a section 382(a) limitation with respect to the T carryover. The June 30 purchase of 35% of T results in T becoming a member of the P group and is therefore a SRLY event.

(iii) Because the SRLY event occurred within six months of the change date of the section 382 event, there is an overlap of the application of the SRLY rules and the application of section 382.

(iv) Consequently, under paragraph (g) of this section, in Year 2 the SRLY limitation does not apply to the Year 1 $100 net operating loss.

Example 3. No overlap—Section 382 event before SRLY event. (i) The facts are the same as in *Example 2* except that Individual B does not sell the additional 35% of T to S until September 30, Year 2.

(ii) The February 28 purchase of 55% of T is a section 382 event because it results in an ownership change of T, under section 382(g), that gives rise to a section 382(a) limitation with respect to the T carryover. The September 30 purchase of 35% of T results in T becoming a member of the P group and is therefore a SRLY event.

(iii) Because the SRLY event did not occur within six months of the change date of the section 382 event, there is no overlap of the application of the SRLY rules and the application of section 382. Consequently, the Year 1 net operating loss is subject to a SRLY limitation and a section 382 limitation.

Example 4. Overlap—SRLY event before section 382 event. (i) P and S file a consolidated return. S has owned 40% of T for 6 years. For Year 6, T has an net operating loss of $500 that is carried forward. On March 31, Year 7, S acquires an additional 40% of T, and on August 31, Year 7, S acquires the remaining 20% of T.

(ii) The March 31 purchase of 40% of T results in T becoming a member of the P group and is therefore a SRLY event. The August 31 purchase of 20% of T is a section 382 event because it results in an ownership change of T, under section 382(g), that gives rise to a section 382(a) limitation with respect to the T carryover.

(iii) Because the SRLY event occurred within six months of the change date of the section 382 event, there is an overlap of the application of the SRLY rules and the application of section 382 within the meaning of this paragraph (g).

(iv) Under this paragraph (g), the SRLY rules of paragraph (c) of this section will apply to the Year 7 tax year. Beginning in Year 8 (the year after the section 382 event), any unabsorbed portion of the Year 6 net operating loss will not be subject to a SRLY limitation.

Example 5. Overlap—Coextensive subgroups. (i) Individual A owns all of the stock of S, which in turn owns all of the stock of T. S and T file a consolidated return beginning in Year 1. B, an individual unrelated to A, owns all of the stock of P, the common parent of a consolidated group. In Year 2, the S group has a $200 consolidated net operating loss which is carried forward, of which $100 is attributable to S, and $100 is attributable to T. At the beginning of Year 3, the P group acquires all of the stock of S from Individual A.

(ii) P's acquisition of S results in S and T becoming members of the P group (the SRLY event). With respect to the Year 2 net operating loss carryover, S and T compose a SRLY subgroup under paragraph (c)(2) of this section.

(iii) S and T also compose a loss subgroup under § 1.1502–91(d)(1) with respect to the Year 2 net operating loss carryover. P's acquisition also results in an ownership

change of S, the subgroup parent, within the meaning of section 382(g), that gives rise to a limitation under section 382(a) (the section 382 event) with respect to the Year 2 carryover.

(iv) Because the SRLY event and the change date of the section 382 event occur on the same date, there is an overlap of the application of the SRLY rules and the application of section 382 within the meaning of paragraph (g) of this section. Because the SRLY subgroup and the loss subgroup are coextensive, under paragraph (g) of this section, the SRLY limitation does not apply to the Year 2 $200 net operating loss.

Example 6. No Overlap—Different subgroups. (i) Individual B owns all of the stock of P, the common parent of a consolidated group. P owns all of the stock of S and all of the stock of T. Individual A owns all of the stock of X, the common parent of another consolidated group. In Year 1, the P group has a $200 consolidated net operating loss, of which $100 is attributable to S and $100 is attributable to T. At the beginning of Year 3, the X group acquires all of the stock of S and T from P and does not make an election under § 1.1502–91(d)(4) (concerning an election to treat the loss subgroup parent requirement as having been satisfied).

(ii) X's acquisition of S and T results in S and T becoming members of the X group (the SRLY event). With respect to the Year 1 net operating loss, S and T compose a SRLY subgroup under paragraph (c)(2) of this section.

(iii) S and T do not bear (and are not treated as bearing) a section 1504(a)(1) relationship. Therefore S and T do not qualify as a loss subgroup under § 1.1502–91(d)(1). X's acquisition of S and T results in separate ownership changes of S and T, that give rise to separate limitations under section 382(a) (the section 382 events) with respect to each of S and T's Year 1 net operating loss carryovers. See § 1.1502–94.

(iv) The SRLY event and the change dates of the section 382 events occur on the same date. However, paragraph (g)(1) of this section does not apply because the SRLY subgroup (composed of S and T) is not coextensive with a loss subgroup with respect to the Year 1 carryovers. Consequently, the Year 1 net operating loss is subject to both a SRLY subgroup limitation and also separate section 382 limitations for each of S and T.

Example 7. No Overlap—Different subgroups. (i) Individual A owns all of the stock of T and all of the stock of S, the common parent of a consolidated group. B, an individual unrelated to Individual A, owns all of the stock of P, the common parent of another consolidated group. In Year 1, T has a net operating loss of $100 that is carried forward. At the end of Year 2, S acquires all of the stock of T from Individual A. In Year 3, the S group sustains a $200 consolidated net operating loss that is carried forward. In Year 8, the P group acquires all of the stock of S from Individual A.

(ii) S's acquisition of T in Year 1 results in T becoming a member of the S group. The acquisition, however, did not result in an ownership change under section 382(g). As a result, T's Year 1 net operating loss is subject to SRLY within the S group. At the end of Year 7, § 1.1502–96(a) treats T's Year 1 net operating loss as not having arisen in a SRLY with respect to the S group. Section 1.1502–96(a), however, applies only for purposes of §§ 1.1502–91 through 1.1502–96 and § 1.1502–98 but not for purposes of this section. See § 1.1502–96(a)(5).

(iii) P's acquisition of S in Year 8 results in S and T becoming members of the P group (the SRLY event). With respect to the Year 1 net operating loss, S and T do not compose a SRLY subgroup under paragraph (c)(2) of this section.

(iv) S and T compose a loss subgroup under § 1.1502–91(d)(1) with respect to the Year 1 net operating loss carryover. P's acquisition of S results in an ownership change of the loss subgroup, within the meaning of section 382(g), that gives rise to a subgroup limitation under section 382(a) (the section 382 event) with respect to that carryover.

(v) The SRLY event and the change date of the section 382 event occur on the same date. However, under paragraph (g)(4) of this section, because the SRLY subgroup and the loss subgroup are not coextensive, T's Year 1 net operating loss carryover is subject to a SRLY limitation.

(vi) With respect to the Year 3 net operating loss carryover, S and T compose both a SRLY subgroup and a loss subgroup under § 1.1502–91(d)(1). Thus, paragraph (g)(1) of this section applies and the S group's Year 3 net operating loss carryover is not subject to a SRLY limitation.

Example 8. SRLY after overlap. (i) Individual A owns all of the stock of R and M, each the common parent of a consolidated group. B, an individual unrelated to Individual A, owns all of the stock of D. In Year 1, D incurs a $100 net operating loss that is carried forward. At the beginning of Year 3, R acquires all of the stock of D. In Year 5, M acquires all of the stock of R in a transaction that did not result in an ownership change of R.

(ii) R's Year 3 acquisition of D results in D becoming a member of the R group (the SRLY event) and also results in an ownership change of D, that gives rise to a limitation under section 382(a) (the section 382 event) with respect to D's net operating loss carryover.

(iii) Because the SRLY event and the change date of the section 382 event occur on the same date, there is an overlap of the application of paragraph (c) of this section and section 382 with respect to D's net operating loss. Consequently, under this paragraph (g), D's Year 1 $100 net operating loss is not subject to a SRLY limitation in the R group.

(iv) M's Year 5 acquisition of R results in R and D becoming members of the M group (the SRLY event), but does not result in an ownership change of R or D that gives rise to a limitation under section 382(a). Because there is no section 382 event, the application of the SRLY rules and section 382 do not overlap. Consequently, D's Year 1 $100 net operating loss is subject to a SRLY limitation in the M group.

(v) Because D's Year 1 net operating loss carryover was subject to the overlap rule of paragraph (g) of this section when it joined the R group, under § 1.1502–21(c)(2) the SRLY subgroup with respect to that carryover includes all of the members of the R group that joined the M group at the same time as D.

Example 9. Overlap—Interim losses. (i) Individual A owns all of the stock of P and S, each the common parent of a consolidated group. S owns all of the stock of T, its only subsidiary. B, an individual unrelated to Individual A, owns all of the stock of M, the common parent of a consolidated group. In Year 1, the S group has a $100 consolidated net operating loss. On January 1 of Year 2, P acquires all of the stock of S from Individual A. On January 1 of Year 3, M acquires 51% of the stock of P from Individual A. On May 31 of Year 3, M acquires the remaining 49% of the stock of P from Individual A. The P group, for the Year 3 period prior to June 1 had a $50 consolidated net operating loss, and under paragraph (b)(2)(iv) of this section, the loss is attributable entirely to S. Other than the losses described above, the P group does not have any other consolidated net operating losses.

(ii) In the P group, S's $100 loss carryover is treated as arising in a SRLY and is subject to the limitation under paragraph (c) of this section. A SRLY subgroup with respect to that loss is composed of S and T, the members which were members of the S group as to which the loss was not a SRLY.

(iii) M's January 1 purchase of 51% of P is a section 382 event because it results in an ownership change of S and T that gives rise to a section 382(a) limitation (the section 382 event) with respect to the Year 1 net operating loss carryover. The purchase, however, does not result in an ownership change of P because it is not a loss corporation under section 382(k)(1). M's May 31 purchase of 49% of P results in P, S, and T becoming members of the M group and is therefore a SRLY event.

(iv) With respect to the Year 1 net operating loss, S and T compose a SRLY subgroup under paragraph (c)(2) of this section and a loss subgroup under § 1.1502–91(d)(1). The loss subgroup does not include P because the only loss at the time of the section 382 event was subject to SRLY with respect to the P group. See § 1.1502–91(d)(1).

(v) Because the SRLY event and the change date of the section 382 event occur on the same date and the SRLY subgroup and loss subgroup are coextensive with respect to the Year 1 net operating loss carryover, there is an overlap of the application of the SRLY rules and the application of section 382 within the meaning of paragraph (g) of this section. Thus, the SRLY limitation does not apply to that carryover.

(vi) The Year 3 net operating loss, which arose between the section 382 event and the SRLY event, is a net operating loss described in paragraph (g)(2)(ii)(B) of this section because it is the net operating loss of a corporation whose SRLY event occurs within

the six month period beginning on the date of a section 382 event.

(vii) With respect to the Year 3 net operating loss, P, S, and T compose a SRLY subgroup under paragraph (c)(2) of this section. Because P, a member of the SRLY subgroup for the Year 3 carryover, is not also a member of a SRLY subgroup that has net operating loss carryovers described in paragraph (g)(2)(ii)(A) of this section (the Year 1 net operating loss), the Year 3 carryover is subject to a SRLY limitation in the M group. See paragraph (g)(4)(ii) of this section.

(h) *Effective date*—(1) *In general.* This section generally applies to taxable years for which the due date (without extensions) of the consolidated return is after June 25, 1999. However—

(i) In the event that paragraph (g)(1) of this section does not apply to a particular net operating loss carryover in the current group, then solely for purposes of applying paragraph (c) of this section to determine a limitation with respect to that carryover and with respect to which the SRLY register (consolidated taxable income determined by reference to only the member's or subgroup's items of income, gain, deduction or loss) began in a taxable year for which the due date of the return was on or before June 25, 1999, paragraph (c)(2) of this section shall be applied without regard to the phrase ''or for a carryover that was subject to the overlap rule described in paragraph (g) of this section or § 1.1502–15(g) with respect to another group (the former group)''; and

(ii) For purposes of paragraph (g) of this section, only an ownership change to which section 382(a), as amended by the Tax Reform Act of 1986, applies shall constitute a section 382 event.

(2) *SRLY limitation.* Except in the case of those members (including members of a SRLY subgroup) described in paragraph (h)(3) of this section, a group does not take into account a consolidated taxable year beginning before January 1, 1997, in determining the aggregate of the consolidated taxable income under paragraph (c)(1) of this section (including for purposes of § 1.1502–15 and § 1.1502–22(c)) for the members (or SRLY subgroups).

(3) *Prior retroactive election.* A consolidated group that applied the rules of § 1.1502–21T(g)(3) in effect prior to June 25, 1999, as contained in 26 CFR part 1 revised April 1, 1999, to all consolidated return years ending on or after January 29, 1991, and beginning before January 1, 1997, does not take into account a consolidated taxable year beginning before January 29, 1991, in determining the aggregate of the consolidated taxable income under paragraph (c)(1) of this section (including for purposes of § 1.1502–15 and § 1.1502–22(c)) for the members (or SRLY subgroups).

(4) *Offspring rule.* Paragraph (b)(2)(ii)(B) of this section applies to net operating losses arising in taxable years ending on or after June 25, 1999.

(5) *Waiver of carrybacks.* Paragraph (b)(3)(ii)(B) of this section (relating to the waiver of carrybacks for acquired members) applies to acquisitions occurring after June 25, 1999.

(6) *Prior periods.* For certain taxable years ending on or before June 25, 1999, see § 1.1502–21T in effect prior to June 25, 1999, as contained in 26 CFR part 1 revised April 1, 1999, as applicable.

§ 1.1502–21T [Removed]

Par. 7. Section 1.1502–21T is removed.

Par. 8. Section 1.1502–22 is added to read as follows:

§ 1.1502–22 Consolidated capital gain and loss.

(a) *Capital gain.* The determinations under section 1222, including capital gain net income, net long-term capital gain, and net capital gain, with respect to members during consolidated return years are not made separately. Instead, consolidated amounts are determined for the group as a whole. The consolidated capital gain net income for any consolidated return year is determined by reference to—

(1) The aggregate gains and losses of members from sales or exchanges of capital assets for the year (other than gains and losses to which section 1231 applies);

(2) The consolidated net section 1231 gain for the year (determined under § 1.1502–23); and

(3) The net capital loss carryovers or carrybacks to the year.

(b) *Net capital loss carryovers and carrybacks*—(1) *In general.* The determinations under section 1222, including net capital loss and net short-term capital loss, with respect to members during consolidated return years are not made separately. Instead, consolidated amounts are determined for the group as a whole. Losses included in the consolidated net capital loss may be carried to consolidated return years, and, after apportionment, may be carried to separate return years. The net capital loss carryovers and carrybacks consist of—

(i) Any consolidated net capital losses of the group; and

(ii) Any net capital losses of the members arising in separate return years.

(2) *Carryovers and carrybacks generally.* The net capital loss carryovers and carrybacks to a taxable year are determined under the principles of section 1212 and this section. Thus, losses permitted to be absorbed in a consolidated return year generally are absorbed in the order of the taxable years in which they were sustained, and losses carried from taxable years ending on the same date, and which are available to offset consolidated capital gain net income, generally are absorbed on a pro rata basis. Additional rules provided under the Internal Revenue Code or regulations also apply, as well as the SRLY limitation under paragraph (c) of this section. See, e.g., section 382(l)(2)(B).

(3) *Carryovers and carrybacks of consolidated net capital losses to separate return years.* If any consolidated net capital loss that is attributable to a member may be carried to a separate return year under the principles of § 1.1502–21(b)(2), the amount of the consolidated net capital loss that is attributable to the member is apportioned and carried to the separate return year (apportioned loss).

(4) *Special rules*—(i) *Short years in connection with transactions to which section 381(a) applies.* If a member distributes or transfers assets to a corporation that is a member immediately after the distribution or transfer in a transaction to which section 381(a) applies, the transaction does not cause the distributor or transferor to have a short year within the consolidated return year of the group in which the transaction occurred that is counted as a separate year for purposes of determining the years to which a net capital loss may be carried.

(ii) *Special status losses.* [Reserved]

(c) *Limitations on net capital loss carryovers and carrybacks from separate return limitation years.* The aggregate of the net capital losses of a member arising (or treated as arising) in SRLYs that are included in the determination of consolidated capital gain net income for all consolidated return years of the group under paragraph (a) of this section may not exceed the aggregate of the consolidated capital gain net income for all consolidated return years of the group determined by reference to only the member's items of gain and loss from capital assets as defined in section 1221 and trade or business assets defined in section 1231(b), including the member's losses actually absorbed by the group in the taxable year (whether or not absorbed by the member). The principles of § 1.1502–21(c) (including the SRLY subgroup principles under § 1.1502–21(c)(2))

apply with appropriate adjustments for purposes of applying this paragraph (c).

(d) *Coordination with respect to consolidated return change of ownership limitation occurring in consolidated return years beginning before January 1, 1997.* If a consolidated return change of ownership occurred before January 1, 1997, the principles of § 1.1502–22A(d) apply to determine the amount of the aggregate of the net capital loss attributable to old members of the group (as those terms are defined in § 1.1502–1(g)), that may be included in the net capital loss carryover under paragraph (b) of this section. For this purpose, § 1.1502–1(g) is applied by treating that date as the end of the year of change.

(e) *Consolidated net capital loss.* Any excess of losses over gains, as determined under paragraph (a) of this section (without regard to any carryovers or carrybacks), is also referred to as the consolidated net capital loss.

(f) *Predecessors and successors.* For purposes of this section, the principles of § 1.1502–21(f) apply with appropriate adjustments.

(g) *Overlap with section 383*—(1) *General rule.* The limitation provided in paragraph (c) of this section does not apply to net capital loss carryovers ((other than a hypothetical carryover like those described in § 1.1502–21(c)(1)(i)(D) and a carryover like those described in § 1.1502–21(c)(1)(ii)) when the application of paragraph (c) of this section results in an overlap with the application of section 383. For a similar rule applying in the case of net capital loss carryovers like those described in §§ 1.1502–21(c)(1)(i)(D) and (c)(1)(ii), see § 1.1502-15(g).

(2) *Definitions*—(i) *Generally.* For purposes of this paragraph (g), the definitions and nomenclature contained in sections 382 and 383, the regulations thereunder, and §§ 1.1502–90 through 1.1502–99 apply.

(ii) *Overlap.* (A) An overlap of the application of paragraph (c) of this section and the application of section 383 with respect to a net capital loss carryover occurs if a corporation becomes a member of the consolidated group (the SRLY event) within six months of the change date of an ownership change giving rise to a section 382 limitation with respect to that carryover (the section 383 event).

(B) If an overlap described in paragraph (g)(2)(ii)(A) of this section occurs with respect to net capital loss carryovers of a corporation whose SRLY event occurs within the six month period beginning on the date of a section 383 event, then an overlap is treated as also occurring with respect to that corporation's net capital loss carryover that arises within the period beginning with the section 383 event and ending with the SRLY event.

(C) For special rules in the event that there is a SRLY subgroup and/or a loss subgroup as defined in § 1.1502–91(d)(1) with respect to a carryover, see paragraph (g)(4) of this section.

(3) *Operating rules*—(i) *Section 383 event before SRLY event.* If a SRLY event occurs on the same date as a section 383 event or within the six month period beginning on the date of the section 383 event, paragraph (g)(1) of this section applies beginning with the tax year that includes the SRLY event.

(ii) *SRLY event before section 383 event.* If a section 383 event occurs within the period beginning the day after the SRLY event and ending six months after the SRLY event, paragraph (g)(1) of this section applies starting with the first tax year that begins after the section 383 event.

(4) *Subgroup rules.* In general, in the case of a net capital loss carryover for which there is a SRLY subgroup and a loss subgroup (as defined in § 1.1502–91(d)(1)), the principles of this paragraph (g) apply to the SRLY subgroup, and not separately to its members. However, paragraph (g)(1) of this section applies—

(i) With respect to a carryover described in paragraph (g)(2)(ii)(A) of this section only if—

(A) All members of the SRLY subgroup with respect to that carryover are also included in a loss subgroup with respect to that carryover; and

(B) All members of a loss subgroup with respect to that carryover are also members of a SRLY subgroup with respect to that carryover; and

(ii) With respect to a carryover described in paragraph (g)(2)(ii)(B) of this section only if all members of the SRLY subgroup for that carryover are also members of a SRLY subgroup that has net capital loss carryovers described in paragraph (g)(2)(ii)(A) of this section that are subject to the overlap rule of paragraph (g)(1) of this section.

(h) *Effective date*—(1) *In general.* This section generally applies to taxable years for which the due date (without extensions) of the consolidated return is after June 25, 1999. However—

(i) In the event that paragraph (g)(1) of this section does not apply to a particular net capital loss carryover in the current group, then solely for purposes of applying paragraph (c) of this section to determine a limitation with respect to that carryover and with respect to which the SRLY register (consolidated taxable income determined by reference to only the member's or subgroup's items of income, gain, deduction or loss) began in a taxable year for which the due date of the return was on or before June 25, 1999, the principles of § 1.1502–21(c)(2) shall be applied without regard to the phrase ''or for a carryover that was subject to the overlap rule described in paragraph (g) of this section or § 1.1502–15(g) with respect to another group (the former group)''; and

(ii) For purposes of paragraph (g) of this section, only an ownership change to which section 383, as amended by the Tax Reform Act of 1986, applies and which results in a section 382 limitation shall constitute a section 383 event.

(2) *Prior periods.* For certain taxable years ending on or before June 25, 1999, see § 1.1502–22T in effect prior to June 25, 1999, as contained in 26 CFR part 1 revised April 1, 1999, as applicable.

§ 1.1502–22T [Removed]

Par. 9. Section 1.1502–22T is removed.

Par. 10. Section 1.1502–23 is added to read as follows:

§ 1.1502–23 Consolidated net section 1231 gain or loss

(a) *In general.* Net section 1231 gains and losses of members arising during consolidated return years are not determined separately. Instead, the consolidated net section 1231 gain or loss is determined under this section for the group as a whole.

(b) Example. The following example illustrates the provisions of this section:

Example. Use of SRLY registers with net gains and net losses under section 1231. (i) In Year 1, T sustains a $20 net capital loss. At the beginning of Year 2, T becomes a member of the P group. T's capital loss carryover from Year 1 is subject to SRLY limits under § 1.1502–22(c). The members of the P group contribute the following to the consolidated taxable income for Year 2 (computed without regard to T's net capital loss carryover under § 1.1502–22):

	P	T
Year 1 (SRLY)		
Ordinary	.....	.....
Capital	.....	(20)
Year 2		
Ordinary	10	20
Capital	70	0
§ 1231	(60)	30

(ii) Under section 1231, if the section 1231 losses for any taxable year exceed the section 1231 gains for such taxable year, such gains and losses are treated as ordinary gains or losses. Because the P group's section 1231

losses, $(60), exceed the section 1231 gains, $30, the P group's net loss is treated as an ordinary loss. T's net section 1231 gain has the same character as the P group's consolidated net section 1231 loss, so T's $30 of section 1231 income is treated as ordinary income for purposes of applying § 1.1502–22(c). Under § 1.1502–22(c), the group's consolidated net capital gain determined by reference only to T's items is $0. None of T's capital loss carryover from Year 1 may be taken into account in Year 2.

(c) *Recapture of ordinary loss.* [Reserved]

(d) *Effective date*—(1) *In general.* This section applies to gains and losses arising in the determination of consolidated net section 1231 gain or loss for taxable years for which the due date (without extensions) of the consolidated return is taxable years is after June 25, 1999.

(2) *Application to prior periods.* See § 1.1502–21(h)(3) for rules applicable to groups that applied the rules of this section to consolidated return years ending on or after January 29, 1991, and beginning before January 1, 1997.

§ 1.1502–23T [Removed]

Par. 11. Section 1.1502–23T is removed.

PART 602—OMB CONTROL NUMBERS UNDER THE PAPERWORK REDUCTION ACT

Par. 12. The authority citation for part 602 continues to read as follows:

Authority: 26 U.S.C. 7805.

Par. 13. In § 602.101, paragraph (b) is amended by removing the entry for § 1.1502–21T from the table and adding an entry in numerical order to the table to read as follows:

§ 602.101 OMB Control numbers.

* * * * *

(b) * * *

CFR part or section where identified and described	Current OMB control No.
* * * * *	
1.1502–21	1545–1237
* * * * *	

John M. Dalrymple,

Acting Deputy Commissioner of Internal Revenue.

Approved: June 18, 1999.

Donald C. Lubick,

Assistant Secretary of the Treasury.

[FR Doc. 99–16161 Filed 6–25–99; 1:27 pm]

BILLING CODE 4830–01–U

DEPARTMENT OF THE TREASURY

Internal Revenue Service

26 CFR Parts 1 and 602

[TD 8824]

RIN 1545–AU32

Regulations Under Section 1502 of the Internal Revenue Code of 1986; Limitations on Net Operating Loss Carryforwards and Certain Built-in Losses and Credits Following an Ownership Change of a Consolidated Group

AGENCY: Internal Revenue Service (IRS), Treasury.

ACTION: Final and temporary regulations.

SUMMARY: This document contains final regulations regarding the operation of sections 382 and 383 of the Internal Revenue Code of 1986 (relating to limitations on net operating loss carryforwards and certain built-in losses and credits following an ownership change) with respect to consolidated groups. The regulations include rules for determining whether a loss group or a loss subgroup has an ownership change, for computing a consolidated section 382 limitation or subgroup section 382 limitation, and for applying sections 382 and 383 to corporations that join or leave a group. The rules are necessary to provide guidance to such groups on the use of certain of their tax attributes.

DATES: *Effective Dates:* These regulations are effective June 25, 1999.

Applicability Dates: For dates of application and special effective date rules, see Effective Dates under **SUPPLEMENTARY INFORMATION**.

FOR FURTHER INFORMATION CONTACT: Lee A. Kelley at (202) 622–7550 (not a toll-free number).

SUPPLEMENTARY INFORMATION:

Paperwork Reduction Act

The collection of information in these final regulations has been reviewed and, pending receipt and evaluation of public comments, approved by the Office of Management and Budget (OMB) under 44 U.S.C. 3507 and assigned control number 1545–1218.

The collections of information in this regulation are in §§ 1.1502–20(g)(4), 1.1502–95(e)(8), 1.1502–95(f), and 1.1502-96(e). This information is required to assure that a section 382 limitation is properly determined and applied in cases of corporations that become or cease to be members of a consolidated group. The collection of information in § 1.1502–98(e)(8) is mandatory. The other collections of information are required to obtain a benefit. The likely respondents are business or other for-profit institutions.

Comments on the collection of information should be sent to the Office of Management and Budget, Attn: Desk Officer for the Department of the Treasury, Office of Information and Regulatory Affairs, Washington, DC 20503, with copies to the Internal Revenue Service, Attn: IRS Reports Clearance Officer, OP:FS:FP, Washington, DC 20224. Comments on the collection of information should be received by August 31, 1999.

Comments are specifically requested concerning:

Whether the collection[s] of information is necessary for the proper performance of the functions of the Internal Revenue Service, including whether the information will have practical utility;

The accuracy of the estimated burden associated with the collection of information (see below);

How the quality, utility, and clarity of the information to be collected may be enhanced;

How the burden of complying with the collection[s] of information may be minimized, including through the application of automated collection techniques or other forms of information technology; and

Estimates of capital or start-up costs and costs of operation, maintenance, and purchase of service to provide information.

Estimated total annual reporting burden: 662 hours.

The estimated annual burden per respondent varies from 15 to 25 minutes, depending on individual circumstances, with an estimated average of 20 minutes.

Estimated number of respondents: 12,054.

Estimated annual frequency of responses: On occasion.

An agency may not conduct or sponsor, and a person is not required to respond to, a collection of information unless it displays a valid control number assigned by the Office of Management and Budget.

Books or records relating to a collection of information must be retained as long as their contents may become material in the administration of any internal revenue law. Generally, tax returns and tax return information are confidential, as required by 26 U.S.C. 6103.

Background

On February 4, 1991, the IRS and Treasury issued three notices of proposed rulemaking, C0–132–87 (56 FR 4194), CO–077–90 (56 FR 4183), and CO–078–90 (56 FR 4228), setting forth rules regarding the application of sections 382 and 383 by consolidated groups and by controlled groups, and regarding the use of built-in deductions and net operating losses and capital losses, including the carryover and carryback of separate return limitation year (SRLY) losses of members of consolidated groups. A public hearing regarding the three sets of proposed regulations was held on April 8, 1991.

On June 27, 1996, the IRS and Treasury published temporary regulations (TD 8678, 61 FR 33335) setting forth rules regarding the application of section 382 to affiliated groups of corporations filing consolidated returns. These regulations were substantially identical to the proposed regulations. A notice of proposed rulemaking cross-referencing the temporary regulations was published in the **Federal Register** on the same day (CO–026–96, 61 FR 33391) and the proposed regulations published in 1991 were withdrawn. The IRS and Treasury also published temporary regulations regarding the SRLY limitation (TD 8677, 61 FR 33321), and controlled group losses (TD 8679, 61 FR 33313). Notices of proposed rulemaking cross-referencing these temporary regulations were published on the same day (CO–025–96, 61 FR 33395 and CO–024–96, 61 FR 33393) and the proposed regulations published in 1991 were withdrawn.

This Treasury decision adopts the 1996 proposed regulations regarding the application of section 382 to affiliated groups of corporations filing consolidated returns. The principal changes to those proposed regulations are described below.

As companions to this Treasury decision, the IRS and Treasury also are issuing final regulations relating to the application of sections 382 and 383 by members of controlled groups, and relating to the SRLY limitation. See TD 8823 and TD 8825 published elsewhere in this issue of the **Federal Register**.

Explanation of Provisions

A. Overview

1. Sections 382 and 383

Under section 382, if an ownership change occurs with respect to a loss corporation (as defined in section 382 and the regulations thereunder), the amount of the loss corporation's taxable income for a post-change year that may be offset by the net operating losses of the loss corporation arising before the ownership change is limited by an amount known as the section 382 limitation. The section 382 limitation for a taxable year of a loss corporation after an ownership change generally is equal to the fair market value of the corporation's stock immediately before the ownership change multiplied by the long-term tax exempt rate (a rate of return published periodically in the Internal Revenue Bulletin). See generally sections 382(b), (e), and (f). This limitation for a taxable year may be increased by certain items, such as an unused limitation from a prior taxable year and certain built-in gains recognized during the taxable year. See section 382(b)(2) and (h).

In general, an ownership change involves an increase of more than 50 percentage points in stock ownership by 5-percent shareholders during the testing period (usually the 3-year period ending on the date on which a loss corporation must make a determination whether it has had an ownership change). In determining whether an ownership change has occurred, all transactions occurring during the testing period that affect the stock ownership of any 5-percent shareholder whose percentage of stock ownership has increased as of the close of the testing date are taken into account. The determination of the percentage ownership interest of any shareholder is made on the basis of the ratio of the fair market value of the loss corporation stock owned by the shareholder to the total fair market value of the loss corporation's outstanding stock. Ordinarily, all stock of the loss corporation, except certain preferred stock described in section 1504(a)(4), is taken into account. These rules are contained in §§ 1.382–2 and 1.382–2T and relate to ownership changes of corporations without regard to whether the corporations file a separate return or join in filing a consolidated return.

2. General Description of Final Regulations

This document contains two sets of rules. The first set of rules, set forth in §§ 1.1502–91 through 1.1502–93, provide the tax treatment for net operating losses that arise in (and net unrealized built-in losses with respect to) years that are not separate return limitation years with respect to a consolidated group. (A separate return limitation year, or SRLY, generally is a taxable year of a subsidiary in which the subsidiary was not a member of the group). In general, these rules adopt a single entity approach to determine ownership changes and the section 382 limitations with respect to such losses.

These final regulations also extend the single entity approach to loss subgroups within consolidated groups. A loss subgroup generally consists of two or more corporations that continue to be affiliated with each other after leaving one group and joining another where at least one of the corporations carries over losses from the first group to the second group. Thus, the single entity approach under the final regulations can apply, for example, to a consolidated group's acquisition of another consolidated group or of a chain of subsidiaries from another group.

The second set of rules, set forth in §§ 1.1502–94 and 1.1502–95, applies to corporations that join or leave a consolidated group with respect to certain attributes (e.g., attributes other than those arising in a consolidated return year). In general, section 382 is applied separately with respect to those attributes because the attributes cannot be used by other members. Section 1.1502–96 contains miscellaneous rules.

In general, § 1.1502–98 provides that the rules contained in §§ 1.1502–91 through 1.1502–96 also apply for purposes of section 383, with adjustments to reflect that section 383 applies to credits and net capital losses.

B. Amendments to the Proposed Regulations

1. Definition of a Loss Subgroup, § 1.1502–91(d)

Under the proposed regulations, a loss subgroup is composed of members of one group (the former group) that become members of another consolidated group. In the case of a net operating loss carryover, the members of a group compose a loss subgroup if (i) They were affiliated with each other in another group, (ii) they bear a relationship to each other described in section 1504(a)(1) immediately after they become members of the group (the subgroup parent requirement), and (iii) at least one of the members carries over a net operating loss arising in a year that is not a SRLY (and is not treated as a SRLY under proposed § 1.1502–21(c)) with respect to the former group. In the case of a net unrealized built-in loss (NUBIL), the members of a group compose a loss subgroup if they (i) Have been continuously affiliated with each other for the 5 consecutive year period ending immediately before they become members of the group (the five-year affiliation requirement), (ii) meet the subgroup parent requirement, and (iii) have, in the aggregate, a NUBIL. A

member ceases to be included in a loss subgroup when it files a separate return, or when a member breaks the relationship described in section 1504(a)(1) to the loss subgroup parent, regardless of whether that member leaves the current group or remains in the consolidated group.

Retention of the Subgroup Percent Requirement in General

Commentators suggested that the final regulations should eliminate the subgroup parent requirement in order to provide a single subgroup definition for the SRLY limitation and for the section 382 limitation. Other commentators recommended eliminating the requirement following an ownership change of the loss subgroup.

Like a loss group, a loss subgroup has an ownership change if the loss subgroup parent has an ownership change (the parent change method). The parent change method, adopted for its administrative simplicity, looks only to ownership shifts of the parent corporation in determining whether the consolidated group (or loss subgroup) has an ownership change. Owner shifts of minority stock of subsidiary members are not taken into account. Application of the parent change method to loss subgroups eliminates the administrative burdens associated with a rule that would mandate separate tracking of the minority stock of each subgroup member for determining whether an ownership change of the loss subgroup has occurred.

The IRS and the Treasury have determined that, in circumstances where owner shifts of a loss subgroup must continue to be tracked, the parent change method should continue to apply for determining whether a subgroup has an ownership change. Accordingly, in general, these final regulations retain the subgroup parent requirement. Also, these final regulations retain the general rule that a member ceases to be a member of the loss subgroup on the first day that it ceases to bear a relationship described in section 1504(a)(1) to the loss subgroup parent. The final regulations, however, provide an election to treat the subgroup parent requirement as satisfied, and provide certain exceptions for ceasing to be a member of a loss subgroup when a member breaks the relationship described in section 1504(a)(1) to the loss subgroup parent, but remains within the current consolidated group.

Election to Treat Subgroup Parent Requirement As Satisfied

The subgroup parent requirement may preclude subgroup treatment in instances where single entity principles make such treatment conceptually appropriate. For example, brother-sister corporations with net operating loss carryovers that are not SRLY losses with respect to the former group are not a loss subgroup even if the same acquirer acquires both corporations at the same time. However, single entity principles support treating the brother-sister corporations as a subgroup because they were affiliated with each other in the former group and remain affiliated in the current group.

To extend single entity treatment in such cases would require a mechanism other than the parent change method to track owner shifts of the loss subgroup. Some commentators suggested permitting the parent of the current group to designate the subgroup parent. Under this approach, such designation would be respected unless the designation is made with a principal purpose of avoiding an ownership change.

The IRS and the Treasury believe that the ability to designate the subgroup parent presents opportunities for avoiding or lessening the impact of section 382. Also, a principal purpose standard is not an effective mechanism for preventing inappropriate designations because the *only* purpose of such designation is to apply the ownership change rules of section 382.

The IRS and Treasury recognize, however, that it is appropriate to extend subgroup treatment to the extent that single entity principles support such treatment, and to the extent that subgroup treatment does not compromise the determination whether a subgroup has an ownership change. Also, the IRS and Treasury recognize that, in certain circumstances, taxpayers may prefer more stringent ownership change rules if they can obtain the benefit of subgroup treatment. Finally, the IRS and Treasury recognize that the ability of brother-sister corporations to constitute a section 382 subgroup may be necessary in order for section 382 subgroups to conform with SRLY subgroups, thus permitting application of the rule that eliminates a separate SRLY limitation where the application of SRLY and section 382 overlap. See §§ 1.1502–15(g), 1.1502–21(g) and 1.1502–22(g).

Accordingly, these final regulations provide that two or more corporations that become members of a consolidated group at the same time and that were affiliated with each other immediately before becoming members of the group are deemed to meet the subgroup parent requirement immediately after they become members of the group if the common parent of the acquiring group makes an election under § 1.1502–91(d)(4) with respect to those members. An election includes all corporations that become members of the current group at the same time and that were affiliated with each other immediately before they become members of the current group. The election applies solely for purposes of satisfying the subgroup parent requirement, and does not apply in determining whether members meet the other requirements for inclusion in a loss subgroup. Although the election applies solely for purposes of §§ 1.1502–91 through 1.1502–96 and § 1.1502-98, the election may affect whether a SRLY limitation overlaps with application of section 382.

If the common parent makes an election under § 1.1502-91(d)(4), each of the members with respect to which the election is made (and that is included in the loss subgroup) is treated as the loss subgroup parent for purposes of determining if the loss subgroup has an ownership change on, or after, becoming members of the current group. If, however, a member with respect to which the election is made has an ownership change upon (or after) ceasing to be a member of the current group, that ownership change does not cause an ownership change of a loss subgroup comprised of one or more of its members that remain members of the current group.

Exceptions for Ceasing To Be a Member of a Loss Subgroup When a Member Breaks the Section 1504(a)(1) Relationship With the Loss Subgroup Parent, § 1.1502–95(d)(1)

In general, under § 1.1502–95(d)(1)(ii), these final regulations provide that a member ceases to be a member of the loss subgroup on the first day that it ceases to bear a relationship described in section 1504(a)(1) to the loss subgroup parent. Continued affiliation through a loss subgroup parent is central to the operation of the parent change method to loss subgroups.

Under certain circumstances, however, separate tracking of the loss subgroup parent terminates, eliminating the need for members to maintain a section 1504(a)(1) relationship through a loss subgroup parent. Section 1.1502–96(a) provides, in part, that ownership shifts of a loss subgroup cease to be separately tracked if there is an ownership change of the loss subgroup

within six months before, on, or after becoming members of the group, or if a period of five years elapses after becoming members of group during which time the loss subgroup does not have an ownership change (a fold-in event).

Also, an election under § 1.1502–91(d)(4) obviates the need for a section 1504(a)(1) relationship through a loss subgroup common parent because each member is separately tracked as if it were the loss subgroup parent.

In circumstances where the necessity of a section 1504(a)(1) relationship through a loss subgroup parent is eliminated, the IRS and the Treasury believe that a subgroup member should not cease to be a member of the subgroup solely because it ceases to bear such a relationship. Accordingly, these final regulations provide two exceptions to the general rule of § 1.1502–95(d)(1)(ii). The first exception applies to the members of the loss subgroup if an election under § 1.1502-91(d)(4) applies to them. The second exception applies to loss subgroup members following a fold-in event.

Members Excluded or Included From a Subgroup With a Principal Purpose of Avoiding a Limitation, § 1.1502–91(d)(5)

Proposed § 1.1502–91(d)(5) provides that corporations do not compose a loss subgroup if any one of them is formed, acquired, or availed of with a principal purpose of avoiding the application of, or increasing any limitation under, section 382. This rule does not apply solely because, in connection with becoming members of the group, the members of a group are rearranged to satisfy the subgroup parent requirement. The final regulations retain these provisions, and, in conformity with the anti-abuse rule for SRLY subgroups, provide that any member excluded from a loss subgroup, if excluded with a principal purpose of avoiding or increasing a section 382 limitation, is treated as included in the loss subgroup. This rule does not apply solely because a group does not rearrange members of a group to satisfy the subgroup parent requirement.

2. Definition of Loss Subgroup With a NUBIL, § 1.1502–91(d)(2)

Commentators criticized the five-year affiliation requirement for adding complexity to the regulations. For instance, the five-year affiliation requirement can cause application of section 382 and SRLY on a single entity basis with respect to members of a loss subgroup with a net operating loss carryover that arose within the former group (because an NOL loss subgroup does not require five years of affiliation), but on a separate entity basis for those same members with respect to built-in losses.

The IRS and Treasury have determined, however, that the five-year affiliation requirement is a necessary feature of the NUBIL subgroup rules. Just as the NOL subgroup rules apply only to loss carryovers that arise in (or have folded into) the former group, so should the NUBIL subgroup rules apply only to built-in losses that accrue within (or have folded into) the former group. Because an accurate method of determining economic accrual (*e.g.*, tracing) would present significant problems for tax administration and for compliance by taxpayers, the IRS and Treasury believe that the five-year affiliation requirement is the best available proxy for determining when built-in attributes arise.

Absent a five-year affiliation requirement, taxpayers could effectively traffic in net unrealized built-in losses without being subject to any limitation (other than one imposed under an applicable ''principal purpose'' anti-abuse rule). A selling group could acquire a new member with a NUBIG and sell both that recently-acquired NUBIG member and the member containing the desired NUBIL to the prospective buyer. To the extent that the NUBIG offset the NUBIL and the corporations were structured to satisfy the requirements for subgroup treatment, recognized built-in losses would escape any limitation and could be freely absorbed by the acquiring group.

Furthermore, the absence of a five-year affiliation requirement could be used to circumvent a SRLY limitation applicable to a NUBIL if built-in losses are recognized. For instance, if a member comes into a group with a NUBIL and without an ownership change, recognition of that NUBIL would be subject to a SRLY limitation during the following five years and the loss could not be freely absorbed by the income of the other members of the group. However, if all the members of the group were included in a NUBIL subgroup upon being acquired by a second group two years into that five-year period, that member's recognized built-in losses immediately thereafter would be subject either to a SRLY or section 382 limitation computed with respect to all the members of the former group (thus increasing the rate at which such losses can be utilized) or, in the event that the acquired corporations have an aggregate NUBIG, to no limitation whatsoever.

Some commentators contended that the five-year affiliation requirement (and the time period required for a fold-in event under § 1.1502–96(a)) should be reduced to three years, based on the duration of the testing period for an ownership change under section 382.

However, a five-year (rather than a three-year) affiliation requirement is necessary to ensure that taxpayers cannot shorten the five-year recognition period for the SRLY limitation, as described above. Also, the IRS and Treasury believe that the five-year recognition period for the SRLY limitation should be maintained because it mirrors the statutorily-mandated five-year recognition period of section 382(h)(7). In general, Treasury and the IRS believe that it is important to conform the application of section 382 and the SRLY rules where possible, particularly in the light of the rule eliminating application of SRLY where its application overlaps with that of section 382.

Moreover, the five-year affiliation requirement is consistent with Congress' indication in section 384(a) of the point at which it is appropriate for built-in attributes of a member to be treated as attributes of the group. Under certain circumstances, section 384(a) prevents the recognized built-in gain of one corporation from offsetting preacquisition losses of another corporation, if such gain is recognized within a five-year period following the acquisition date. Similarly, section 384(b) provides that section 384(a) does not apply to prevent the recognized built-in gain of one corporation from offsetting the preacquisition losses of another corporation if the gain corporation and the loss corporation were members of the same controlled group (as defined in section 384(b)(2)) for the five-year period ending on the acquisition date.

For these reasons, the final regulations do not reduce the duration of the affiliation requirement from five years to three years.

Commentators requested clarification that an acquiring group takes into account application of the fold-in rules of § 1.1502–96(a) in the former group in determining which members are included in a loss subgroup. A new example under § 1.1502–96(a)(3), and a cross-reference in a new § 1.1502–91(g)(3) to the fold-in rules, clarifies this treatment. Thus, a corporation whose NUBIL folded in to a former group is deemed to have a five-year affiliation with the common parent of that group (and is deemed to have affiliation histories with other group members). A special rule provides that the

corporation is not deemed to have been previously affiliated with another corporation that joined the former group at the same time, but was not taken into account in determining a NUBIL limitation, even if in fact the two corporations were previously affiliated.

3. Members Included—Determination Whether a Consolidated Group Has a NUBIL, § 1.1502–91(g)(2)(ii)

Proposed § 1.1502–91(g)(2)(i) provides, in part, that the members included in the determination whether a consolidated group has a NUBIG or NUBIL are all members of the group on the day the determination is made, other than a new loss member with a NUBIL, and members included in a NUBIL subgroup.

The IRS and Treasury have determined that the reasons for applying a five-year affiliation requirement to subgroups are equally relevant to groups. Accordingly, these final regulations provide that the members included in the determination whether a consolidated group has a NUBIL are the common parent and all other members that have been affiliated with the common parent for the five consecutive year period ending on the day that the determination is made.

In certain cases, a member (or loss subgroup) can join a consolidated group with a NUBIG, but have a NUBIL on the date the consolidated group determines whether it has a NUBIL. The IRS and Treasury have determined that, in such cases, it is appropriate for the built-in attribute of the member to be included in the group's determination because it is clear that such NUBIL arose when it was a group member. Accordingly, the final regulations include in the determination whether a group has a NUBIL any member that has a NUBIL on the date the determination is made, and that is neither a new loss member with a NUBIL nor a member of a NUBIL loss subgroup. The final regulations also include members in the group's determination whether the group has a NUBIL if such member(s) joined the consolidated group with a NUBIL, and, in the aggregate, have a NUBIG on the day that such determination is made.

4. Members Included—Determination Whether a Consolidated Group (or Loss Subgroup) With a Net Operating Loss Has a NUBIG, § 1.1502–91(g)(2)(i)

Proposed § 1.1502–93(c) provides that if a loss group (or loss subgroup) has a NUBIG, *any* recognized built-in gain of the loss group (or loss subgroup) is taken into account under section 382(h) in determining the consolidated section 382 limitation (or subgroup section 382 limitation) (emphasis added).

Commentators suggested that this provision, considered together with the five-year affiliation requirement, makes it unclear whether an NOL loss subgroup with members that do not satisfy the five-year affiliation requirement can use a NUBIG, if recognized, to increase the loss subgroup's section 382 limitation.

The IRS and Treasury have determined that the concerns forming the basis of the five-year affiliation requirement for determining whether a loss subgroup has a NUBIL do not extend to the determination whether a net operating loss carryover group (or loss subgroup) has a NUBIG. For example, unlike a NUBIL that can be eliminated by a NUBIG without an immediate tax cost, recognized built-in gains exact such a cost and, therefore, do not present the same planning opportunities. Accordingly, these final regulations provide that the members included in the determination whether an NOL loss group (or loss subgroup) has a NUBIG are all members of the group (or loss subgroup) on the day that the determination is made.

Section 1.1502–91(g)(2)(v) provides, in part, that in determining whether an NOL loss group has a NUBIG which, if recognized, increases the consolidated section 382 limitation, the group includes all of its members on the day the determination is made. However, for purposes of determining whether a group has a net unrealized built-in loss, not all members of the consolidated group may be included. Thus, a consolidated group may have recognized built-in gains that increase the amount of consolidated taxable income that may be offset by its pre-change net operating loss carryovers that did not arise (and are not treated as arising) in a SRLY, and also may have recognized built-in losses the absorption of which is limited. Similar results may obtain for loss subgroups. In such cases, § 1.1502–93(c)(2) prohibits the use of recognized built-in gains to increase the amount of consolidated taxable income that can be offset by recognized built-in losses.

5. Recognized Built-in Gain or Loss on the Disposition of an Intercompany Obligation of a Member, § 1.1502–91(h)(2)

Proposed § 1.1502–91(h)(2) provides that gain or loss recognized by a member on the disposition of stock of another member or of an intercompany obligation is treated as recognized built-in gain or loss under section 382(h)(2)(unless disallowed under § 1.1502–20 or otherwise), even though gain or loss on such stock or obligation is not included in the determination of the group's NUBIG or NUBIL immediately before the ownership change. The IRS and Treasury have determined that such treatment may lead to inappropriate results. For instance, if a bad debt deduction is treated as a recognized built-in loss, application of a section 382 limitation to that loss may prevent the proper offset of cancellation of indebtedness income against the bad debt deduction. Accordingly, § 1.1502–91(h)(2) of the final regulations treats gain or loss recognized on the disposition of an intercompany obligation as recognized built-in gain or loss only to the extent that the transaction gives rise to aggregate income or loss within the consolidated group.

6. Ownership Change Determination—The Parent Change Method, § 1.1502–92

Proposed § 1.1502–92 provides rules for determining an ownership change of a loss group (or a loss subgroup). A loss group (or loss subgroup) has an ownership change only if the common parent has an ownership change under the parent change method. Out of concern that taxpayers could exploit the parent change method's failure to account for minority shifts of stock, the proposed regulations adopted a supplemental change method that does take into account minority shifts of stock under certain circumstances.

Under the proposed regulations, the supplemental method applies if a person who is a 5-percent shareholder of the common parent (including any person acting pursuant to a plan or arrangement with such 5-percent shareholder) increases its percentage ownership both in the common parent and in any subsidiary of the group within the same testing period. In that event, the loss group (or loss subgroup) must also determine whether it had an ownership change under the rules for the parent change method by treating the common parent as though it had issued to the person who acquires (or is deemed to acquire) the subsidiary stock an amount of its own stock (by value) that equals the value of the subsidiary stock represented by the percentage increase in that person's ownership of the subsidiary (determined on a separate entity basis).

Section 1.1502–92(c), *Example 2* of the proposed regulations illustrates application of the supplemental change method. In *Example 2,* A owns all the stock of L, a loss group parent, and L owns all of the stock of L1. As part of a plan, A sells 49 percent of the L stock

to B on October 7, Year 2, and L1 issues new stock representing a 20 percent ownership interest in L1 to the public on November 6, Year 2. The example concludes that ''because the issuance of L1 stock to the public occurs in connection with B's acquisition of L stock pursuant to a plan,'' the supplemental change method applies to the public offering of L1 stock.

Commentators suggest that the ''plan or arrangement'' language sweeps too broadly, and that only plans to avoid section 382 should be subject to this rule. Commentators also contend that *Example 2* is beyond the scope of the operative rule because the facts do not demonstrate a plan or arrangement with a 5-percent shareholder.

The IRS and Treasury believe that it is appropriate to apply the supplemental change method to certain acquisitions of a loss group in which the plan is not between the 5-percent shareholder of the loss group parent and another person to increase their interests in the loss group. For example, if an individual buys 50 percent or less of the stock of a loss group parent, and as part of the same plan, causes a public offering out of a subsidiary, the supplemental change method should apply to that offering. (Conversely, the supplemental change method should not apply unless the 5-percent shareholder's increase in the stock of parent or subsidiary is related to the increase by another person because those increases are pursuant to the same plan.)

Accordingly, these final regulations provide that a 5-percent shareholder of the common parent (or loss subgroup parent) is treated as increasing its ownership interest in the stock of a subsidiary to the extent, if any, that the percentage ownership interest of another person or persons in the stock of the subsidiary is increased pursuant to a plan or arrangement under which the 5-percent shareholder increases its percentage ownership interest in the common parent (or loss subgroup parent).

To alleviate concerns that the supplemental change method is overly broad, the final regulations limit the scope of the supplemental change method through application of the rules of § 1.382–2T(k). The final regulations provide that the supplemental change method will apply if the common parent (or loss subgroup parent) has actual knowledge of the increase in the 5-percent shareholder's ownership interest in the stock of the subsidiary (or has actual knowledge of the plan or arrangement) before the date that the group's income tax return is filed for the taxable year that includes the date of that increase or, if, at any time during the testing period, the 5-percent shareholder of the common parent is also a 5-percent shareholder of the subsidiary (determined without regard to a deemed acquisition of subsidiary stock under the plan or arrangement rule) whose percentage increase in the ownership of the stock of the subsidiary would be taken into account in determining if the subsidiary has an ownership change. For purposes of determining the 5-percent shareholders of the subsidiary, the principles of § 1.382–2T(k), including the duty to inquire, apply to the common parent (or loss subgroup parent).

Several additional changes to the supplemental change method were made in response to comments. Section 1.1502–92(c)(4)(iii) clarifies that stock treated as issued under the supplemental change method is not treated as issued in testing periods that do not include the testing date on which the parent stock is deemed to be issued. Section 1.1502–92(c)(4)(ii) provides that stock is not treated as issued if a deemed issuance of parent stock would not cause the loss group (or loss subgroup) to have an ownership change before the day on which the subsidiary leaves the loss group (or loss subgroup).

To avoid retroactive changes in ownership, § 1.1502–92(c)(4)(v) provides that if the supplemental change method applies to an acquisition of subsidiary stock before the first date that the 5-percent shareholder increases its percentage ownership interest in the stock of the common parent (or loss subgroup parent), then the deemed issuance of stock is treated as occurring on the first such date. However, the value of the subsidiary stock is the value of such stock on the date it was acquired. In addition, § 1.1502–92(c)(4)(vi) provides that if two or more 5-percent shareholders are treated as increasing their percentage ownership interests pursuant to a single plan or arrangement described above, appropriate adjustments must be made so that the amount of stock treated as issued is not taken into account more than one time.

Commentators also requested that the supplemental change method apply only if the acquisitions of parent stock and subsidiary stock are with a principal purpose of avoiding or lessening the impact of section 382. The IRS and Treasury believe that if the same 5-percent shareholder increases in the stock of both a subsidiary and the common parent within the same testing period, the supplemental change method should apply without further evidence of an avoidance purpose. Similarly, a plan or arrangement under which a 5-percent shareholder and another person both increase their interests in the loss group is sufficient proof of an avoidance purpose that the supplemental change method properly applies without further inquiry.

7. Consolidated Section 382 Limitation, § 1.1502–93

Proposed § 1.1502–93 provides rules for computing the consolidated section 382 limitation following an ownership change of a loss group. The value of the loss group is the value, immediately before the ownership change, of the stock (including stock described in section 1504(a)(4)) of each member of the loss group, other than stock that is owned directly or indirectly by a member. Section 1.1502–93(b)(2) provides that this value is adjusted under any rule in section 382 (such as section 382(l)(1), relating to certain capital contributions) requiring an adjustment to value for purposes of computing the section 382 limitation. The section 382 limitation, as so determined, is further adjusted as required by section 382 and the regulations thereunder (such as section 382(m)(2), relating to a short taxable year). Similar rules apply in determining the section 382 limitation for a loss subgroup.

In response to comments, the final regulations make several clarifications with respect to circumstances that require an adjustment to the value of a loss group or loss subgroup.

Section 1.1502–93(b)(2)(i) provides that, for purposes of section 382(e)(2), redemptions and corporate contractions that do not effect a transfer of value outside of the loss group (or loss subgroup) are disregarded. For purposes of section 382(l)(1), capital contributions between members of the loss group (or loss subgroup) (or a contribution of stock to a member made solely to satisfy the loss subgroup parent requirement of §§ 1.1502–91(d)(1)(ii) or 1.1502–91(d)(2)(ii)), are not taken into account. Also, the substantial nonbusiness asset test of section 382(l)(4) is applied on a group (or subgroup) basis, and is not applied separately to its members.

Section 1.1502–93(b)(2)(ii) provides rules that apply to prevent duplication of value of the group (or loss subgroup) and to prevent duplication of the section 382 limitation. This section provides that appropriate adjustments must be made to the extent necessary to prevent any duplication of the value of the stock of a member, even though corporations that do not file

consolidated returns may not be required to make such an adjustment. In making these adjustments, the group (or loss subgroup) may apply the principles of § 1.382–8 (relating to controlled groups of corporations) in determining the value of a loss group (or loss subgroup) even if that section would not apply if separate returns were filed. Also, the principles of § 1.382–5(d) (relating to successive ownership changes and absorption of a section 382 limitation) may apply to adjust the consolidated section 382 limitation (or subgroup section 382 limitation) of a loss group (or loss subgroup) to avoid a duplication of value if there are simultaneous (rather than successive) ownership changes.

One commentator suggested that contributions of assets by the selling group to a departing member or loss subgroup generally should not be subject to section 382(l)(1). The IRS and Treasury have determined that, unlike transfers of stock or assets that do not effect a transfer of value into a loss subgroup, capital contributions that constitute a transfer of value into a loss group or to a departing member should continue to be subject to section 382(l)(1).

A new § 1.1502–93(c)(2) provides that appropriate adjustments must be made so that any recognized built-in gain of a member that increases more than one section 382 limitation (whether consolidated, subgroup, or separate) does not effect a duplication in the amount of consolidated taxable income that can be offset by pre-change net operating losses. In addition, recognized built-in gains may not increase the amount of consolidated taxable income that can be offset by recognized built-in losses.

8. Ceasing To Be a Member of a Consolidated Group (or Loss Subgroup), § 1.1502–95

Elective Apportionment of NUBIG

In general, the common parent of a consolidated group may elect to apportion all or part of each element (the value element and the adjustment element) of a consolidated section 382 limitation to a former member or loss subgroup. The proposed regulations do not provide that the common parent may elect to apportion all or part of a loss group's NUBIG.

Under section 382(h)(1)(A), if a consolidated group has a NUBIG immediately before an ownership change, the section 382 limitation for any recognition period taxable year is increased by the recognized built-in gain for such taxable year. This increase cannot exceed the NUBIG, reduced by recognized built-in gains for prior years ending in the recognition period.

Commentators suggest that, like the value element and the adjustment element of the consolidated section 382 limitation, the common parent should be able to apportion any part or all of the group's NUBIG to a departing member (or loss subgroup). The final regulations adopt this recommendation.

In general, § 1.1502–95(c)(2)(ii) provides that the amount of the loss group's NUBIG that may be apportioned to one or more former members that cease to be members during the same consolidated return year cannot exceed the loss group's excess, immediately after the close of that year, of net unrealized built-in gain over recognized built-in gain, determined under section 382(h)(1)(A)(ii) (relating to a limitation on recognized built-in gain). In general, NUBIG apportioned to a former member reduces the amount of NUBIG that the group can avail itself of in subsequent taxable years.

For purposes of determining the extent to which the former member's section 382 limitation can be increased by recognized built-in gains, the amount of NUBIG apportioned is treated as if it were an amount determined under section 382(h) with respect to the former member. The former member's five-year recognition period begins on the group's (or loss subgroup's) change date.

Default Apportionment of Zero Section 382 Limitation and NUBIG When a Member Ceases To Be a Member of a Group (or Loss Subgroup), § 1.1502–95(c)(2)(ii)

Section 1.1502–95(c)(1) provides that the common parent may elect to apportion all or any part of a consolidated section 382 limitation to a former member (or a loss subgroup) when the member or loss subgroup leaves the group. If the common parent does not make an apportionment of the applicable section 382 limitation(s) or of a NUBIG that the member recognizes during the recognition period, the former member or loss subgroup has a consolidated section 382 limitation of zero with respect to pre-change attributes (the zero default rule).

Commentators suggested that the zero default rule may be a trap for the unwary. For instance, under the proposed regulations, a subgroup member that ceases to bear a section 1504(a)(1) to the subgroup parent is subject to the zero default rule, even if that member remains within the current consolidated group.

The IRS and Treasury recognize that any default rule will benefit some taxpayers while operating to the detriment of others. For example, a default apportionment of a section 382 limitation or NUBIG based on the departing member's contribution to the group's net operating loss carryover could cause some apportioned limitation to go unused if that member becomes subject to a new section 382 limitation upon departing the group. By contrast, a rule providing that the default limitation is capped by the amount of any subsequent section 382 limitation, would be difficult to administer. Because the consequences of applying any default rule depend on the particular facts of a transaction, including the relative income generation of the departing and remaining members, the IRS and Treasury believe that the simplicity of the zero default rule makes the rule preferable to other alternatives.

Also, the IRS and the Treasury believe that the new exceptions to ceasing to be a member of a loss subgroup substantially reduce the likelihood that the zero default rule will yield unexpected results. For example, an acquisition of a loss subgroup typically will cause an ownership change of the loss subgroup. Following that ownership change, a member that remains within the current group now can break the section 1504(a)(1) relationship to the loss subgroup parent without ceasing to be a member of the loss subgroup. Accordingly, these final regulations retain the zero default rule when a member ceases to be a member of a group (or loss subgroup). The zero default rule also applies to a NUBIG.

Mandatory Apportionment of a Group's NUBIL to a Departing Member, § 1.1502–95(e)

In general, a group has a NUBIL if the adjusted bases of the assets of members included in such determination under § 1.1502–91(g) exceed their fair market value immediately before the change date. Similar rules apply to loss subgroups. Subject to the limitations of section 382(h)(2)(B), NUBILs recognized within the five year period beginning on the change date are subject to the consolidated section 382 limitation. The proposed regulations do not provide rules for apportioning a group's NUBIL to a former member (or loss subgroup). The IRS and Treasury believe that a mandatory apportionment of the group's NUBIL is necessary to ensure that the group's NUBIL, if recognized by the former member (or loss subgroup) during the recognition period, remains subject to the consolidated section 382 limitation. One commentator suggests that a former member (or loss group)

should be apportioned a group's NUBIL only if and when a former member that had a separately computed NUBIL that contributed to the group's NUBIL departs the group, and the contributed built-in loss has not fully been recognized. Adjustments would reflect intragroup transfers of assets occurring between the change date and the date that the former member departs.

The IRS and Treasury believe that the suggested approach overemphasizes the location of assets with a NUBIG. For example, if a former member has a NUBIG determined on a separate entity basis, a recognized built-in loss of that member will not be limited, even if the former member is the first corporation to dispose of a built-in loss asset. The IRS and Treasury believe that subjecting the sale of built-in loss assets to the consolidated section 382 limitation, regardless of the location of built-in gain assets, more accurately reflects the NUBIL as a group attribute. Similarly, consistent with treatment of the NUBIL as a group attribute, the approach permits built-in gain to be sheltered by built-in loss only after the excess of built-in losses over built-in gains has been recognized. Accordingly, these final regulations adopt a model that apportions NUBIL based on the gross amount of built-in loss that the departing member contributed to the determination of the group's NUBIL.

In general, § 1.1502–95(f) provides that a departing member is allocated a portion of the group's (or loss subgroup's) NUBIL if, immediately after the close of the consolidated return year in which the departing member ceases to be a member, the amount of the loss group's (or loss subgroup's) excess of net unrealized built-in loss over recognized built-in loss (the remaining NUBIL balance) is greater than zero. In general, NUBIL apportioned to former members in prior taxable years is treated as recognized built-in loss in those years.

The amount of NUBIL allocated to a departing member is equal to the remaining NUBIL balance multiplied by a fraction. The numerator of the fraction is the amount of the built-in loss, taken into account on the change date, in the assets held by the departing member immediately after the member ceases to be a member of the loss group (or loss subgroup). The denominator of the fraction is the sum of the numerator, plus the amount of the built-in loss, taken into account on the change date, in the assets held by the group immediately after the close of the taxable year in which the departing member ceases to be a member. (Fluctuations in value of the assets between the change date and the date that the member ceases to be a member of the group (or loss subgroup), or the close of the taxable year in which the member ceases to be a member of the loss group, are disregarded.) In general, adjustments are made for gain or loss that has been recognized during the recognition period, and for assets that are transferred basis property. The amount of the NUBIL allocated to a former member generally is treated as previously recognized built-in loss for purposes of applying the limitation of section 382(h)(1)(B)(ii) to a loss group's taxable years beginning after the year in which the former member ceases to be a member.

For purposes of determining the amount of the former member's recognized built-in losses in any taxable year beginning after the former member ceases to be a member, the amount of the loss group's (or loss subgroup's) net unrealized built-in loss that is apportioned to the former member is treated as if it were an amount of net unrealized built-in loss determined under section 382(h)(1)(B)(i) with respect to such member, and that amount is not reduced under section 382(h)(1)(B)(ii) by the loss group's (or loss subgroup's) recognized built-in losses.

Subgroup principles apply to the allocation of a NUBIL. For example, if two or more members leave a loss group, and are members of a consolidated group, any allocation of the loss group's NUBIL is made on a subgroup basis. In general, the common parent may apportion all or any part of a consolidated section 382 limitation (or subgroup section 382 limitation) under § 1.1502–95(c) to a former member to which the group's NUBIL is allocated (or to a loss subgroup that includes that member).

9. Miscellaneous Rules, § 1.1502–96

Fold-in rules do not apply to NUBIGs, § 1.1502–96(a)

Proposed § 1.1502–96(a)(2) provides in part that, following a fold-in event described in § 1.1502–96(a)(1), the member's separately computed NUBIG or NUBIL is included in the determination whether the group has a NUBIG or NUBIL.

The IRS and Treasury believe that the ''fold-in'' of a member's NUBIG can lead to inappropriate results. For example, a consolidated group that acquires a corporation with a small net operating loss carryover and a large NUBIG can immediately offset the group's NUBIL with the NUBIG, if the member is acquired with an ownership change. Accordingly, the fold-in rules of § 1.1502-96(a) do not apply to include a member's separately computed NUBIG in determining whether a group has a NUBIL. A member's NUBIG is only included in such determination if the member is included under § 1.1502–91(g)(2).

Net Operating Loss Carryovers Reattributed Under § 1.1502–20(g)

Section 1.1502–20 of the regulations disallows a deduction for certain losses on the disposition of stock of a subsidiary. In general, under § 1.1502–20(g), the common parent can reattribute to itself net operating loss carryovers or capital loss carryovers attributable to the subsidiary in an amount not to exceed the disallowed loss. Section 1.1502–20(g) further provides that the common parent succeeds to the reattributed losses as if the losses were succeeded to in a transaction described in section 381(a). Also, any owner shift of the subsidiary (including any deemed owner shift resulting from section 382(g)(4)(D) or 382(l)(3)) in connection with the disposition is not taken into account under section 382 with respect to the reattributed losses. (§ 1.1502–20(g)(1)). The preamble to TD 8364 (56 FR 47379, September 19, 1991)(which added § 1.1502–20), states that clarification regarding the application of section 382 to reattributed losses would be provided in connection with finalizing §§ 1.1502–91 through 1.1502–99. The preamble states that, for example, it is anticipated that proposed § 1.1502–95 would be modified to permit the common parent to elect to retain all or part of a section 382 limitation that applies to reattributed SRLY losses.

A new § 1.1502–96(d) provides rules relating to reattributed losses. This section generally provides that §§ 1.1502–91 through 1.1502–96 and § 1.1502–98 apply to reattributed losses consistent with the provision of § 1.1502–20(g) that treats the common parent as succeeding to the losses in a transaction to which section 381(a) applies. For example, if the reattributed loss is a pre-change attribute subject to a section 382 limitation, it remains subject to that limitation following the reattribution. Section 1.1502–96(d)(4) provides rules that allow the common parent to elect to apportion to itself all or part of any separate section 382 limitation or subgroup section 382 limitation to which the reattributed loss is subject. The apportionment is made under the principles of the rules of § 1.1502–95(c), relating to the apportionment of a consolidated section 382 limitation to a member that leaves

the group. In certain cases, the section 382 limitation applicable to the reattributed loss is zero unless an apportionment of such limitation is made to the common parent. The election to apportion a section 382 limitation is made as part of the election to reapportion the loss. See § 1.1502–20(g)(4), as amended by this document.

As previously set forth in § 1.1502–20(g), § 1.1502–96(d) adopts the general rule that any owner shift of the subsidiary (including any deemed owner shift resulting from section 382(g)(4)(D) or 382(l)(3))in connection with the disposition of the subsidiary's stock) is not taken into account under section 382 with respect to the reattributed losses. The final regulations, however, modify the general rule to provide that any owner shift with respect to the successor corporation that is treated as continuing in existence under § 1.382–2(a)(1)(ii) must be taken into account for such purpose if such owner shift is effected by the reattribution and any owner shift of the stock of the subsidiary not held directly or indirectly by the common parent would have been taken into account if such shift had occurred immediately before the reattribution. Such an owner shift may occur if the subsidiary has minority shareholders that, under § 1.382–2(a)(1)(ii), are treated as decreasing their ownership in the reattributed loss, while the shareholders of the common parent increase their ownership interests in that loss.

The final regulations provide that, in general, the value of the stock of the common parent is used to establish a section 382 limitation for the reattributed loss with respect to an ownership change upon, or after, the reattribution. These rules coordinate the determination of the value of that stock with the capital contribution rules of section 382(l)(1), and also require appropriate adjustments so that value is not improperly omitted or duplicated as a result of the reattribution.

Effective Dates

Sections 1.1502–91 through 1.1502–96 and 1.1502–98

Except as set forth below, §§ 1.1502–91 through 1.1502–96 and 1.1502–98 apply to testing dates that occur on or after June 25, 1999. Sections 1.1502–94 through 1.1502–96 also apply on any date on or after June 25, 1999 on which a corporation becomes a member of a group or on which a corporation ceases to be a member of a loss group (or a loss subgroup).

A transition rule for net unrealized built-in loss provides that a consolidated group may apply § 1.1502–91A(g) for the period ending on the day before June 25, 1999 to determine the earliest date that its testing period begins (treating the day before June 25, 1999 as the end of a taxable year.)

The election under § 1.1502–91(d)(4) to treat the subgroup parent requirement as satisfied is effective for corporations that become members of a consolidated group in taxable years for which the due date of the income tax return (without extensions) is after June 25, 1999. Section 1.1502–95(d)(2)(ii) (relating to exceptions to ceasing to be a member of loss subgroup) applies to corporations that cease to bear a section 1504(a)(1) relationship to a loss subgroup parent in taxable years for which the due date of the income tax return (without extensions) is after June 25, 1999.

The third sentence of § 1.1502–91(d)(5) (relating to members excluded from a loss subgroup) applies to corporations that become members of a consolidated group on or after June 25, 1999.

In the case of corporations that cease to be members of a loss group (or loss subgroup) before June 25, 1999, in a taxable year for which the due date of the income tax return (without extensions) is after June 25, 1999, §§ 1.1502–95 (a), (b), (c) and (f) apply to those corporations if the common parent makes the election described in the second sentence of (c)(1) of that section in the time and manner prescribed in paragraph (f) of that section.

Section 1.1502–96(d) applies to reattributions of net operating losses or net capital losses in taxable years for which the due date of the income tax return (without extensions) is after June 25, 1999; except that the election under § 1.1502–96(d)(5) (relating to an election to reattribute section 382 limitation) can be made with any election under § 1.1502–20(g)(4) to reattribute to the common parent a net operating loss or net capital loss that is timely filed on or after June 25, 1999.

Sections 1.1502–91A through 1.1502–96A and 1.1502–98A apply to any testing date on or after January 1, 1997, and before June 25, 1999. Sections 1.1502–94A through 1.1502–96A also apply on any date on or after January 1, 1997, and before June 25, 1999, on which a corporation becomes a member of a group or on which a corporation ceases to be a member of a loss group (or a loss subgroup). For periods before January 1, 1997, the transition rules in § 1.1502–99A(c) continue to apply.

The transition rules in § 1.1502–99A for periods ending before January 1, 1997 also are clarified to provide that a member that ceases to be a member of a group does not have a zero section 382 limitation with respect to pre-change net operating losses allocated to that member.

Need for Immediate Guidance

Because the temporary regulations are not applicable for taxable years ending after June 26, 1999, it is necessary to implement these final regulations without delay to ensure continuity of treatment of certain attributes and to ensure that there is no period within which the treatment of such attributes is inconsistent with the temporary regulations and these final regulations. See section 7805(e)(2). Accordingly, it is impracticable and contrary to the public interest to issue this Treasury decision subject to the effective date limitation of section 553(d) of title 5 of the United States Code (if applicable).

Special Analysis

It has been determined that this Treasury decision is not a significant regulatory action as defined in EO 12866. It is hereby certified that these regulations do not have a significant economic impact on a substantial number of small entities. This certification is based on the fact that these regulations principally affect corporations filing consolidated federal income tax returns that have net operating losses or other attributes that are subject to section 382. Available data indicates that many consolidated return filers are large companies (not small businesses). In addition, the data indicates that an insubstantial number of consolidated return filers that are smaller companies have net operating losses or other attributes subject to section 382. Moreover, many of these corporations will not have ownership changes. Therefore, a Regulatory Flexibility Analysis under the Regulatory Flexibility Act (5 U.S.C. chapter 6) is not required. Pursuant to section 7805(f) of the Internal Revenue Code, the notice of proposed rulemaking preceding these regulations was sent to the Small Business Administration for comment on its impact on small business.

Drafting Information. The principal author of the final regulations is Lee A. Kelley of the Office of Assistant Chief Counsel (Corporate), IRS. Other personnel from the IRS and Treasury participated in their development.

Adoption of Amendments to the Regulations

Accordingly, 26 CFR parts 1 and 602 are amended as follows:

PART 1—INCOME TAXES

Paragraph 1. The authority citation for part 1 is amended by removing the entries for sections 1.1502–91T, 1.1502–92T, 1.1502–93T, 1.1502–94T, 1.1502–95T, 1.1502–96T, 1.1502–98T, and 1.1502–99T, and adding entries in numerical order to read in part as follows:

Authority: 26 U.S. C. 7805 * * *

Section 1.1502–91 also issued under 26 U.S.C. 382(m) and 26 U.S.C. 1502.

Section 1.1502–92 also issued under 26 U.S.C. 382(m) and 26 U.S.C. 1502.

Section 1.1502–93 also issued under 26 U.S.C. 382(m) and 26 U.S.C. 1502.

Section 1.1502–94 also issued under 26 U.S.C. 382(m) and 26 U.S.C. 1502.

Section 1.1502–95 also issued under 26 U.S.C. 382(m) and 26 U.S.C. 1502.

Section 1.1502–96 also issued under 26 U.S.C. 382(m) and 26 U.S.C. 1502.

Section 1.1502–98 also issued under 26 U.S.C. 382(m) and 26 U.S.C. 1502.

Section 1.1502–99 also issued under 26 U.S.C. 382(m) and 26 U.S.C. 1502. * * *

Section 1.1502–91A also issued under 26 U.S.C. 382(m) and 26 U.S.C. 1502.

Section 1.1502–92A also issued under 26 U.S.C. 382(m) and 26 U.S.C. 1502.

Section 1.1502–93A also issued under 26 U.S.C. 382(m) and 26 U.S.C. 1502.

Section 1.1502–94A also issued under 26 U.S.C. 382(m) and 26 U.S.C. 1502.

Section 1.1502–95A also issued under 26 U.S.C. 382(m) and 26 U.S.C. 1502.

Section 1.1502–96A also issued under 26 U.S.C. 382(m) and 26 U.S.C. 1502.

Section 1.1502–98A also issued under 26 U.S.C. 382(m) and 26 U.S.C. 1502.

Section 1.1502–99A also issued under 26 U.S.C. 382(m) and 26 U.S.C. 1502. * * *

Par. 2. In the list below, for each section indicated in the left column, remove the wording indicated in the middle column, and add the wording indicated in the right column.

Affected section	Remove	Add
1.1502–91T(a)(1), first sentence	§§ 1.1502–92T and 1.1502–93T	§§ 1.1502–92A and 1.1502–93A.
1.1502–91T(a)(1), third sentence	§ 1.1502–92T	§ 1.1502–92A.
1.1502–91T(a)(1), third sentence	§ 1.1502–93T	§ 1.1502–93A.
1.1502–91T(a)(3)	§§ 1.1502–94T and 1.1502–95T	§§ 1.1502–94A and 1.1502–95A.
1.1502–91T(b) introductory text	§§ 1.1502–92T through 1.1502–99T	§§ 1.1502–92A through 1.1502–99A.
1.1502–91T(b)(1)	§§ 1.1502–92T through 1.1502–99T	§§ 1.1502–92A through 1.1502–99A.
1.1502–91T(c)(2), second sentence	§ 1.1502–96T(a)	§ 1.1502–96A(a).
1.1502–91T(c)(3), Example (b), second sentence.	§ 1.1502–94T	§ 1.1502–94A.
1.1502–91T(d)(4), second sentence	§ 1.1502–94T	§ 1.1502–94A
1.1502–91T(d)(5), first sentence	§ 1.1502–95T(d)	§ 1.1502–95A(d).
1.1502–91T(d)(5), second sentence	§ 1.1502–96T(a)	§ 1.1502–96A(a).
1.1502–91T(e)(2), Example(b), third sentence	§ 1.1502–93T	§ 1.1502–93A.
1.1502–91T(f)(2), Example(b)(2), first sentence	§ 1.1502–96T(a)	§ 1.1502–96A(a).
1.1502–91T(f)(2), Example(b)(2), third sentence.	§ 1.1502–92T(a)(2)	§ 1.1502–92A(a)(2).
1.1502–91T(f)(2), Example(b)(2), fourth sentence.	§ 1.1502–93T	§ 1.1502–93A.
1.1502–91T(f)(2), Example(c), second sentence.	§ 1.1502–96T(c)	§ 1.1502–96A(c).
1.1502–91T(g)(1), last sentence	§ 1.1502–94T(c)	§ 1.1502–94A(c).
1.1502–91T(g)(1), last sentence	§ 1.1502–96T(a)	§ 1.1502–96A(a).
1.1502–91T(g)(2)(i)(A)	§ 1.1502–94T(a)(1)(ii)	§ 1.1502–94A(a)(1)(ii).
1.1502–91T(g)(2)(i)(B)	§ 1.1502–91T(d)(2)	§ 1.1502–91A(d)(2).
1.1502–91T(j), first sentence	§§ 1.1502–92T through 1.1502–99T	§§ 1.1502–92A through 1.1502–99A.
1.1502–92T(a), second sentence	§ 1.1502–94T	§ 1.1502–94A.
1.1502–92T(a), second sentence	§ 1.1502–96T(b)	§ 1.1502–96A(b).
1.1502–92T(b)(1)(i)(A)	§ 1.1502–91T(c)	§ 1.1502–91A(c).
1.1502–92T(b)(1)(i)(B)	§ 1.1502–91T(c)	§ 1.1502–91A(c).
1.1502–92T(b)(1)(ii), second sentence	§ 1.1502–95T(b)	§ 1.1502–95A(b).
1.1502–92T(b)(1)(ii)(A)	§ 1.1502–91T(d)	§ 1.1502–91A(d).
1.1502–92T(b)(1)(ii)(C)	§ 1.1502–91T(d)	§ 1.1502–91A(d).
1.1502–92T(b)(2) Example 1(a), sixth sentence	§ 1.1502–91T(c)(1)	§ 1.1502–91A(c)(1)
1.1502–92T(b)(2) Example 3(b), first sentence	§ 1.1502–91T(d)(1)	§ 1.1502–91A(d)(1).
1.1502–92T(b)(2) Example 4(b), first sentence	§ 1.1502–91T(d)(1)	§ 1.1502–91A(d)(1).
1.1502–92T(b)(3)(iii) Example 2(d), fourth sentence.	§ 1.1502–94T	§ 1.1502–94A.
1.1502–92T(b)(3)(iii) Example 3(a), seventh sentence.	§ 1.1502–91T(d)	§ 1.1502–91A(d).
1.1502–92T(b)(4), first sentence	§ 1.1502–96T(a)	§ 1.1502–96A(a).
1.1502–92T(b)(4), first sentence	§ 1.1502–96T(a)(2)	§ 1.1502–96A(a)(2).
1.1502–92T(b)(4), first sentence	§ 1.1502–96T(b)	§ 1.1502–96A(b).
1.1502–92T(b)(4), second sentence	§ 1.1502–96T(a) applies, see § 1.1502–96T(c)	§ 1.1502–96A(a) applies, see § 1.1502–96A(c).
1.1502–92T(e)(1)(ii)	§ 1.1502–96T(b)	§ 1.1502–96A(b).
1.1502–92T(e)(2), fifth sentence	§ 1.1502–96T(a)	§ 1.1502–96A(a).
1.1502–92T(e)(2), fifth sentence	§ 1.1502–91T(d)	§ 1.1502–91A(d).
1.1502–93T(a)(2)	§ 1.1502–95T(c)	§ 1.1502–95A(c).
1.1502–93T(b)(2), last sentence	§ 1.382–8T	§ 1.382–8.
1.1502–93T(b)(2), fourth sentence	§ 1.1502–91T(g)(2)	§ 1.1502–91A(g)(2).
1.1502–94T(a)(1)(i)	§ 1.1502–91T(d)(1)	§ 1.1502–91A(d)(1).
1.1502–94T(a)(1)(ii)	§ 1.1502–91T(d)(2)	§ 1.1502–91A(d)(2).
1.1502–94T(a)(3)	§ 1.1502–91T(d)	§ 1.1502–91A(d).
1.1502–94T(a)(3)	§§ 1.1502–92T and 1.1502–93T	§§ 1.1502–92A and 1.1502–93A.
1.1502–94T(a)(4), first sentence	§ 1.1502–96T(a)	§ 1.1502–96A(a).
1.1502–94T(a)(4), first sentence	§ 1.1502–96T(a)(2)	§ 1.1502–96A(a)(2).

Affected section	Remove	Add
1.1502–94T(a)(4), first sentence	§ 1.1502–92T(b)(1)(i)	§ 1.1502–92A(b)(1)(i).
1.1502–94T(a)(4), first sentence	§ 1.1502–96T(b)	§§ 1.1502–96A(b).
1.1502–94T(a)(4), second sentence	§ 1.1502–96T(a) applies, see § 1.1502–96T(c)	§ 1.1502–96A(a) applies, see § 1.1502–96A(c).
1.1502–94T(a)(5)	§ 1.1502–96T(c)	§ 1.1502–96A(c).
1.1502–94T(b)(4) Example 1(b), first sentence	§ 1.1502–91T(d)	§ 1.1502–91A(d).
1.1502–94T(b)(4) Example 2(b),	§ 1.1502–91T(d)(1)	§ 1.1502–91A(d)(1).
1.1502–94T(b)(4) Example 2(d), first sentence	§ 1.1502–96T(a)	§ 1.1502–96A(a).
1.1502–94T(b)(4) Example 2(d), third sentence	§ 1.1502–91T(c)	§ 1.1502–91A(c).
1.1502–94T(b)(4) Example 3(b), first sentence	§ 1.1502–91T(d)(1)	§ 1.1502–91A(d)(1).
1.1502–94T(b)(4) Example 3(c), second sentence.	§§ 1.1502–96T(a) and 1.1502–91T(c)(2)	§§ 1.1502–96A(a) and 1.1502–91A(c)(2).
1.1502–94T(c), first sentence	§§ 1.1502–91T(g) and (h)	§§ 1.1502–91A(g) and (h) and 1.1502–93A(c).
1.1502–94T(c), second sentence	§ 1.1502–91T(g)(3)	§ 1.1502–91A(g)(3).
1.1502–94T(d), fifth sentence	§ 1.1502–96T(a)	§ 1.1502–96A(a).
1.1502–94T(d), sixth sentence	§ 1.1502–92T(e)(1)	§ 1.1502–92A(e)(1).
1.1502–95T(a)(3), paragraph heading	§§ 1.1502–91T through 1.1502–93T	§§ 1.1502–91A through 1.1502–93A.
1.1502–95T(a)(3)	§§ 1.1502–91T through 1.1502–93T	§§ 1.1502–91A through 1.1502–93A.
1.1502–95T(b)(1) introductory text, first sentence.	§§ 1.1502–91T through 1.1502–93T	§§ 1.1502–91A through 1.1502–93A.
1.1502–95T(b)(2) introductory text	§ 1.1502–92T	§ 1.1502–92A.
1.1502–95T(b)(4) Example(2)(a), second sentence.	§ 1.1502–92T	§ 1.1502–92A.
1.1502–95T(c)(2) introductory text	§ 1.1502–93T	§ 1.1502–93A.
1.1502–95T(c)(7) Example(1)(a), third sentence.	§ 1.1502–92T	§ 1.1502–92A.
1.1502–95T(d)(2) Example(1)(a), fifth sentence	§ 1.1502–92T	§ 1.1502–92A.
1.1502–95T(d)(2) Example(3)(a), fourth sentence.	§ 1.1502–92T(b)(1)(ii)	§ 1.1502–92A(b)(1)(ii).
1.1502–95T(e)(1) introductory text	§ 1.1502–95T	§ 1.1502–95A.
1.1502–96T(a)(2) introductory text, first sentence.	§ 1.1502–91T(c)(1)(i)	§ 1.1502–91A(c)(1)(i).
1.1502–96T(a)(2)(ii)	§ 1.1502–91T(c)	§ 1.1502–91A(c).
1.1502–96T(a)(3), second sentence	§ 1.1502–91T(f)(2)	§ 1.1502–91A(f)(2).
1.1502–96T(a)(5), first sentence	§§ 1.1502–91T through 1.1502–95T	§§ 1.1502–91A through 1.1502–95A.
1.1502–96T(a)(5), first sentence	§ 1.1502–98T	§ 1.1502–98A.
1.1502–96T(b)(1) introductory text, first sentence.	§ 1.1502–92T	§ 1.1502–92A.
1.1502–96T(b)(1) introductory text, first sentence.	§ 1.1502–91T(c)(1)	§ 1.1502–91A(c)(1).
1.1502–96T(b)(1) introductory text, first sentence.	§ 1.1502–91T(d)	§ 1.1502–91A(d).
1.1502–96T(b)(1) introductory text, second sentence.	§ 1.1502–95T(b)	§ 1.1502–95A(b).
1.1502–96T(b)(3), paragraph heading	*§§ 1.1502–91T, 1.1502–92T, and 1.1502–94T*	§§ 1.1502–91A, 1.1502–92A, and 1.1502–94A.
1.1502–96T(b)(3), first sentence	§ 1.1502–92T	§ 1.1502–92A.
1.1502–96T(b)(3), first sentence	§ 1.1502–92T	§ 1.1502–92A.
1.1502–96T(b)(3), second sentence	§ 1.1502–94T	§ 1.1502–94A.
1.1502–96(c), last sentence	§ 1.382–5T(d)	§ 1.382–5(d).
1.1502–98T, first sentence	§§ 1.1502–91T through 1.1502–96T	§§ 1.1502–91A through 1.1502–96A.
1.1502–98T, second sentence	§§ 1.1502–91T through 1.1502–96T	§§ 1.1502–91A through 1.1502–96A
1.1502–98T, third sentence	§ 1.1502–92T	§ 1.1502–92A.
1.1502–98T, third sentence	§ 1.1502–93T	§ 1.1502–93A
1.1502–99T(a), first sentence	Sections 1.1502–91T through 1.1502–96T and 1.1502–98T.	Sections 1.1502–91A through 1.1502–96A and 1.1502–98A.
1.1502–99T(a), second sentence	Sections 1.1502–94T through 1.1502–96T	Sections 1.1502–94A through 1.1502–96A.
1.1502–99T(b), first sentence	§§ 1.1502–91T through 1.1502–96T and 1.1502–98T.	§§ 1.1502–91A through 1.1502–96A and 1.1502–98A.
1.1502–99T(b), second sentence	§ 1.1502–92T(b)(1)(i)	§ 1.1502–92A(b)(1)(i).
1.1502–99T(b), third sentence	§ 1.1502–92T(b)(1)	§ 1.1502–92A(b)(1).
1.1502–99T(c)(1)(ii)	§§ 1.1502–91T through 1.1502–96T and 1.1502–98T.	§§ 1.1502–91A through 1.1502–96A and 1.1502–98A
1.1502–99T(c)(1)(iii), first sentence	§§ 1.1502–91T through 1.1502–96T and 1.1502–98T.	§§ 1.1502–91A through 1.1502–96A and 1.1502–98A.
1.1502–99T(c)(1)(iii), second sentence	§ 1.1502–92T	§ 1.1502–92A.
1.1502–99T(c)(2)(i), first sentence	§§ 1.1502–91T through 1.1502–96T and through 1.1502–98T.	§§ 1.1502–91A 1.1502–96A and 1.1502–98A.
1.1502–99T(c)(2)(i), first sentence	§ 1.1502–95T(c)	§ 1.1502–95A(c).
1.1502–99T(c)(2)(i), fifth sentence	§ 1.1502–91T(d)(2)(i)	§ 1.1502–91A(d)(2)(i).
1.1502–99T(c)(2)(ii)	§ 1.382–8T	§ 1.382–8.
1.1502–99T(c)(2)(ii)	§ 1.382–8T(h)	§ 1.382–8(h).
1.1502–99T(d)(1)	§ 1.1502–92T	§ 1.1502–92A.

Affected section	Remove	Add
1.1502–99T(d)(3)	§§ 1.1502–91T through 1.1502–96T and 1.1502–98T.	§§ 1.1502–91A through 1.1502–96A and 1.1502–98A.

Par. 3. Section 1.1502–20 is amended as follows:

1. Adding a sentence to the end of paragraph (g)(1).
2. Redesignating paragraph (g)(5) as paragraph (g)(4).
3. Paragraph (g)(4)(i)(A) is amended by removing ‘‘, and’’ and adding ‘‘;’’ in its place.
4. Paragraph (g)(4)(i)(B) is amended by removing the period at the end of the paragraph and adding ‘‘; and’’ in its place.
5. Adding a new paragraph (g)(4)(i)(C) immediately after paragraph (g)(4)(i)(B) and before paragraph (g)(4)(i) concluding text.
6. Redesignating paragraph (g)(4)(ii) as paragraph (g)(4)(iii).
7. Adding a new paragraph (g)(4)(ii).

The revisions and additions read as follows:

§ 1.1502–20 Disposition or deconsolidation of subsidiary stock.

* * * * *

(g) * * *

(1) * * * See § 1.1502–96(d) for rules relating to section 382 and the reattribution of losses under this paragraph (g).

* * * * *

(4)

(i) * * *

(C) If the common parent is reattributing to itself all or any part of a section 382 limitation pursuant to § 1.1502–96(d)(5), the information required by paragraph (g)(4)(ii) of this section.

* * * * *

(ii) *Reattribution of section 382 limitation*. The information required by this paragraph (g)(4)(ii) is a separate list for each subsidiary (or a separate list for two or more subsidiaries that are members of a loss subgroup whose pre-change subgroup losses are being reattributed) with respect to which an apportionment of a separate section 382 limitation or subgroup section 382 limitation is being made, setting forth—

(A) The name and E.I.N. of the subsidiary (or subsidiaries that were members of a loss subgroup);

(B) A statement entitled ‘‘THIS IS AN ELECTION UNDER § 1.1502–96(d)(5) TO APPORTION ALL OR PART OF [insert A SEPARATE or A SUBGROUP or BOTH A SEPARATE AND A SUBGROUP] SECTION 382 LIMITATION TO [insert name and E.I.N. of the common parent]’’;

(C) The date of the ownership change giving rise to the separate section 382 limitation or subgroup section 382 limitation that is being apportioned;

(D) The amount of the separate (or subgroup) section 382 limitation for the taxable year in which the reattribution occurs (determined without reference to any apportionment under this section or § 1.1502–95(c));

(E) The amount of each net operating loss carryover or capital loss carryover, and the year in which it arose, of the subsidiary (or subsidiaries) that is subject to the separate section 382 limitation or subgroup section 382 limitation that is being apportioned to the common parent, and the amount of the value element and adjustment element of that limitation that is apportioned to the common parent.

* * * * *

Par. 3a. Immediately following § 1.1502–79A, an undesignated centerheading is added to read as follows:

Regulations Applying Section 382 With Respect to Testing Dates (and Corporations Joining or Leaving Consolidated Groups) Before June 25, 1999

Par. 4. Section § 1.1502–90T is amended as follows:

1. Redesignating § 1.1502–90T as § 1.1502–90A [newly redesignated § 1.1502–90A will appear after the centerheading added in Par. 3a.]
2. Revising the section heading and the introductory text of newly designated § 1.1502–90A.
3. Redesignating the entries for § 1.1502–91T through § 1.1502–99T as § 1.1502–91A through § 1.1502–99A and revising the section headings.
4. Revising the entries for paragraph (a) of newly designated § 1.1502–99A.

The revisions read as follows:

§ 1.1502–90A Table of contents.

The following list contains the major headings in §§ 1.1502–91A through 1.1502–99A:

§ 1.1502–91A Application of Section 382 With Respect to a Consolidated Group Generally Applicable for Testing Dates Before June 25, 1999.

* * * * *

§ 1.1502–92A Ownership change of a loss group or a loss subgroup generally applicable for testing dates before June 25, 1999.

* * * * *

§ 1.1502–93A Consolidated section 382 limitation (or subgroup section 382 limitation) generally applicable for testing dates before June 25, 1999.

* * * * *

§ 1.1502–94A Coordination with section 382 and the regulations thereunder when a corporation becomes a member of a consolidated group generally applicable for corporations becoming members of a group before June 25, 1999.

* * * * *

§ 1.1502–95A Rules on ceasing to be a member of a consolidated group (or loss subgroup) generally applicable for corporations ceasing to be members before June 25, 1999.

* * * * *

§ 1.1502–96A Miscellaneous rules generally applicable for testing dates before June 25, 1999.

* * * * *

§ 1.1502–97A Special rules under section 382 for members under the jursidiction of a court in a title 11 or similar case. [Reserved].

§ 1.1502–98A Coordination with section 383 generally applicable for testing dates (or members joining or leaving a group) before June 25, 1999.

* * * * *

§ 1.1502–99A Effective dates.

(a) Effective date.

(1) In general.

(2) Anti-duplication rules for recognized built-in gain.

* * * * *

Par. 5. Section 1.1502–91T is amended as follows:

1. Redesignating § 1.1502–91T as § 1.1502–91A.
2. Revising the section heading of newly designated § 1.1502–91A.
3. Amending paragraph (h)(2) by removing the words ‘‘or an intercompany obligation’’ and replacing them with ‘‘(or an intercompany obligation disposed of before June 25, 1999’’.

The revision reads as follows:

§ 1.1502–91A Application of section 382 with respect to a consolidated group generally applicable for testing dates before June 25, 1999.

* * * * *

Par. 6. Section 1.1502–92T is revised as § 1.1502–92A, and the section heading is revised to read as follows:

§ 1.1502–92A Ownership change of a loss group or a loss subgroup generally applicable for testing dates before June 25, 1999.

* * * * *

Par 6a. Section 1.1502–93T is amended as follows:

1. Redesignating § 1.1502–93T as § 1.1502–93A.
2. Revising the section heading of newly redesignated § 1.1502–93A.
3. Adding a sentence at the end of paragraph (c).

The additions and revisions read as follows:

§ 1.1502–93A Consolidated section 382 limitation (or subgroup section 382 limitation) generally applicable for testing dates before June 25, 1999.

* * * * *

(c) * * * See § 1.1502–99A(a)(2) for a special rule relating to the application of § 1.502–93(c)(2) to consolidated return years for which the due date of the return is after June 25, 1999.

* * * * *

Par. 7. Section 1.1502–94T is amended as follows:

1. Redesignating § 1.1502–94T as § 1.1502–94A.
2. Revising the section heading of newly redesignated § 1.1502–94A.
3. Revising the last sentence of paragraph (b)(4), *Example 3*(b).

The revision reads as follows:

§ 1.1502–94A Coordination with section 382 and the regulations thereunder when a corporation becomes a member of a consolidated group) generally applicable for corporations becoming members of a group before June 25, 1999.

* * * * *

(b) * * *

(4) * * *

Example 3. * * *

(b) * * * See also § 1.1502–21T in effect prior to June 25, 1999, contained in 26 CFR Part 1, revised April 1, 1999, or § 1.1502–21, as applicable.

* * * * *

Par. 8. Redesignate § 1.1502–95T as § 1.1502–95A and revise the section heading to read as follows:

§ 1.1502–95A Rules on ceasing to be a member of a consolidated group generally applicable for corporations ceasing to be members before June 25, 1999.

* * * * *

Par. 9. Redesignate § 1.1502–96T as § 1.1502–96A and revise the section heading to read as follows:

§ 1.1502–96A. Miscellaneous rules generally applicable for testing dates before June 25, 1999.

* * * * *

Par. 10. Redesignate § 1.1502–97T as § 1.1502–97A and revise the section heading to read as follows:

§ 1.1502–97A Special rules under section 382 for members under the jurisdiction of a court in a title 11 or similar case.

[Reserved].

* * * * *

Par. 11. Redesignate § 1.1502–98T as § 1.1502–98A and revise the section heading to read as follows:

§ 1.1502–98A Coordination with section 383 generally applicable for testing dates (or members joining or leaving a group) before June 25, 1999.

* * * * *

Par. 12. Section 1.1502–99T is amended as follows:

1. Redesignating § 1.1502–99T as § 1.1502–99A.
2. Revising the section heading.
3. Revising paragraph (a).
4. Amending paragraph (c)(2)(i) by removing the language ''(relating to the apportionment'' in the first sentence and adding ''and (b)(2)(ii)(relating to the apportionment''.

The revisions read as follows:

§ 1.1502–99A Effective dates.

(a) *Effective date*—(1) *In general.* Except as provided in § 1.1502–99(b), §§ 1.1502–91A through 1.1502–96A and 1.1502–98A apply to any testing date on or after January 1, 1997, and before June 25, 1999.

Sections 1.1502–94A through 1.1502–96A also apply on any date on or after January 1, 1997, and before June 25, 1999, on which a corporation becomes a member of a group or on which a corporation ceases to be a member of a loss group (or a loss subgroup).

(2) *Anti-duplication rules for recognized built-in gain.* Section 1.1502–93(c)(2)(relating to recognized built-in gain of a loss group or loss subgroup) applies to taxable years for which the due date for income tax returns (without extensions) is after June 25, 1999,

* * * * *

Par. 13. Sections 1.1502–90 through 1.1502–99 are added to read as follows:

§ 1.1502–90 Table of contents.

The following list contains the major headings in §§ 1.1502-91 through 1.1502–99:

§ 1.1502–91 Application of section 382 with respect to a consolidated group.

(a) Determination and effect of an ownership change.
(1) In general.
(2) Special rule for post-change year that includes the change date.
(3) Cross-reference.
(b) Definitions and nomenclature.
(c) Loss group.
(1) Defined.
(2) Coordination with rule that ends separate tracking.
(3) Example.
(d) Loss subgroup.
(1) Net operating loss carryovers.
(2) Net unrealized built-in loss.
(3) Loss subgroup parent.
(4) Election to treat loss subgroup parent requirement as satisfied.
(5) Principal purpose of avoiding a limitation.
(6) Special rules.
(7) Examples.
(e) Pre-change consolidated attribute.
(1) Defined.
(2) Example.
(f) Pre-change subgroup attribute.
(1) Defined.
(2) Example.
(g) Net unrealized built-in gain and loss.
(1) In general.
(2) Members included.
(i) Consolidated group with a net operating loss.
(ii) Determination whether a consolidated group has a net unrealized built-in loss.
(iii) Loss subgroup with net operating loss carryovers.
(iv) Determination whether subgroup has a net unrealized built-in loss.
(v) Separate determination of section 382 limitation for recognized built-in losses and net operating losses.
(3) Coordination with rule that ends separate tracking.
(4) Acquisitions of built-in gain or loss assets.
(5) Indirect ownership.
(6) Common parent not common parent for five years.
(h) Recognized built-in gain or loss.
(1) In general. [Reserved]
(2) Disposition of stock or an intercompany obligation of a member.
(3) Intercompany transactions.
(4) Exchanged basis property.
(i) [Reserved]
(j) Predecessor and successor corporations.

§ 1.1502–92 Ownership change of a loss group or a loss subgroup.

(a) Scope.
(b) Determination of an ownership change.
(1) Parent change method.
(i) Loss group.
(ii) Loss subgroup.
(iii) Special rule if election regarding section 1504(a)(1) relationship is made.
(2) Examples.
(3) Special adjustments.
(i) Common parent succeeded by a new common parent.
(ii) Newly created loss subgroup parent.
(iii) Examples.
(4) End of separate tracking of certain losses.
(c) Supplemental rules for determining ownership change.
(1) Scope.
(2) Cause for applying supplemental rule.
(3) Operating rules.
(4) Supplemental ownership change rules.
(i) Additional testing dates for the common parent (or loss subgroup parent).
(ii) Treatment of subsidiary stock as stock of the common parent (or loss subgroup parent).
(iii) Different testing periods.

(iv) Disaffiliation of a subsidiary.
(v) Subsidiary stock acquired first.
(vi) Anti-duplication rule.
(5) Examples.
(d) Testing period following ownership change under this section.
(e) Information statements.
(1) Common parent of a loss group.
(2) Abbreviated statement with respect to loss subgroups.

§ 1.1502–93 Consolidated section 382 limitation (or subgroup section 382 limitation).

(a) Determination of the consolidated section 382 limitation (or subgroup section 382 limitation).
(1) In general.
(2) Coordination with apportionment rule.
(b) Value of the loss group (or loss subgroup).
(1) Stock value immediately before ownership change.
(2) Adjustment to value.
(i) In general.
(ii) Anti-duplication.
(3) Examples.
(c) Recognized built-in gain of a loss group or loss subgroup.
(1) In general.
(2) Adjustments.
(d) Continuity of business.
(1) In general.
(2) Example.
(e) Limitations of losses under other rules.

§ 1.1502–94 Coordination with section 382 and the regulations thereunder when a corporation becomes a member of a consolidated group.

(a) Scope.
(1) In general.
(2) Successor corporation as new loss member.
(3) Coordination in the case of a loss subgroup.
(4) End of separate tracking of certain losses.
(5) Cross-reference.
(b) Application of section 382 to a new loss member.
(1) In general.
(2) Adjustment to value.
(3) Pre-change separate attribute defined.
(4) Examples.
(c) Built-in gains and losses.
(d) Information statements.

§ 1.1502–95 Rules on ceasing to be a member of a consolidated group (or loss subgroup).

(a) In general.
(1) Consolidated group.
(2) Election by common parent.
(3) Coordination with §§ 1.1502–91 through 1.1502–93.
(b) Separate application of section 382 when a member leaves a consolidated group.
(1) In general.
(2) Effect of a prior ownership change of the group.
(3) Application in the case of a loss subgroup.
(4) Examples.
(c) Apportionment of a consolidated section 382 limitation.
(1) In general.
(2) Amount which may be apportioned.
(i) Consolidated section 382 limitation.
(ii) Net unrealized built-in gain.
(3) Effect of apportionment on the consolidated group.
(i) Consolidated section 382 limitation.
(ii) Net unrealized built-in gain.
(4) Effect on corporations to which an apportionment is made.
(i) Consolidated section 382 limitation.
(ii) Net unrealized built-in gain.
(5) Deemed apportionment when loss group terminates.
(6) Appropriate adjustments when former member leaves during the year.
(7) Examples.
(d) Rules pertaining to ceasing to be a member of a loss subgroup.
(1) In general.
(2) Exceptions.
(3) Examples.
(e) Allocation of net unrealized built-in loss.
(1) In general.
(2) Amount of allocation.
(i) In general.
(ii) Transferred basis property and deferred gain or loss.
(iii) Assets for which gain or loss has been recognized.
(iv) Exchanged basis property.
(v) Two or more members depart during the same year.
(vi) Anti-abuse rule.
(3) Effect of the allocation on the consolidated group.
(4) Effect on corporations to which the allocation is made.
(5) Subgroup principles.
(6) Apportionment of consolidated section 382 limitation (or subgroup section 382 limitation).
(i) In general.
(ii) Special rule for former members that become members of the same consolidated group.
(7) Examples.
(8) Reporting requirement.
(f) Filing the election to apportion the section 382 limitation and net unrealized built-in gain.
(1) Form of the election to apportion.
(2) Signing of the election.
(3) Filing of the election.
(4) Revocation of election.

§ 1.1502–96 Miscellaneous rules.

(a) End of separate tracking of losses.
(1) Application.
(2) Effect of end of separate tracking.
(i) Net operating loss carryovers.
(ii) Net unrealized built-in losses.
(iii) Common parent not common parent for five years.
(3) Continuing effect of end of separate tracking.
(i) In general.
(ii) Example.
(4) Special rule for testing period.
(5) Limits on effects of end of separate tracking.
(b) Ownership change of subsidiary.
(1) Ownership change of a subsidiary because of options or plan or arrangement.
(2) Effect of the ownership change.
(i) In general.
(ii) Pre-change losses.
(3) Coordination with §§ 1.1502–91, 1.1502–92, and 1.1502–94.
(4) Example.
(c) Continuing effect of an ownership change.
(d) Losses reattributed under § 1.1502–20(g).
(1) In general.
(2) Deemed section 381(a) transaction.
(3) Rules relating to owner shifts.
(i) In general.
(ii) Examples.
(4) Rules relating to the section 382 limitation.
(i) Reattributed loss is a pre-change separate attribute of a new loss member.
(ii) Reattributed loss is a pre-change subgroup attribute.
(iii) Potential application of section 382(l)(1).
(iv) Duplication or omission of value.
(v) Special rule for continuity of business requirement.
(5) Election to reattribute section 382 limitation.
(i) Effect of election.
(ii) Examples.
(e) Time and manner of making election under § 1.1502–91(d)(4).
(1) In general.
(2) Election statement.

§ 1.1502–97 Special rules under section 382 for members under the jurisdiction of a court in a title 11 or similar case. [Reserved].

§ 1.1502–98 Coordination with section 383.

§ 1.1502–99 Effective dates.

(a) Effective date.
(b) Special rules.
(1) Election to treat subgroup parent requirement as satisfied.
(2) Principal purpose of avoiding a limitation.
(3) Ceasing to be a member of a loss subgroup.
(i) Ownership change of a loss subgroup.
(ii) Expiration of 5-year period.
(4) Reattribution of net operating loss carryovers under § 1.1502–20(g).
(5) Election to apportion net unrealized built-in gain.
(c) Testing period may include a period beginning before June 25, 1999.
(1) In general.
(2) Transition rule for net unrealized built-in losses.

§ 1.1502–91 Application of section 382 with respect to a consolidated group.

(a) *Determination and effect of an ownership change*—(1) *In general.* This section and §§ 1.1502–92 and 1.1502–93 set forth the rules for determining an ownership change under section 382 for members of consolidated groups and the section 382 limitations with respect to attributes described in paragraphs (e) and (f) of this section. These rules generally provide that an ownership change and the section 382 limitation are determined with respect to these attributes for the group (or loss subgroup) on a single entity basis and

not for its members separately. Following an ownership change of a loss group (or a loss subgroup) under § 1.1502–92, the amount of consolidated taxable income for any post-change year which may be offset by pre-change consolidated attributes (or pre-change subgroup attributes) shall not exceed the consolidated section 382 limitation (or subgroup section 382 limitation) for such year as determined under § 1.1502–93.

(2) *Special rule for post-change year that includes the change date.* If the post-change year includes the change date, section 382(b)(3)(A) is applied so that the consolidated section 382 limitation (or subgroup section 382 limitation) does not apply to the portion of consolidated taxable income that is allocable to the period in the year on or before the change date. See generally § 1.382–6 (relating to the allocation of income and loss). The allocation of consolidated taxable income for the post-change year that includes the change date must be made before taking into account any consolidated net operating loss deduction (as defined in § 1.1502–21(a)).

(3) *Cross-reference.* See §§ 1.1502–94 and 1.1502–95 for rules that apply section 382 to a corporation that becomes or ceases to be a member of a group or loss subgroup.

(b) *Definitions and nomenclature.* For purposes of this section and §§ 1.1502–92 through 1.1502–99, unless otherwise stated:

(1) The definitions and nomenclature contained in section 382 and the regulations thereunder (including the nomenclature and assumptions relating to the examples in § 1.382–2T(b)) and this section and §§ 1.1502–92 through 1.1502–99 apply.

(2) In all examples, all groups file consolidated returns, all corporations file their income tax returns on a calendar year basis, the only 5-percent shareholder of a corporation is a public group, the facts set forth the only owner shifts during the testing period, no election is made under paragraph (d)(4) of this section, and each asset of a corporation has a value equal to its adjusted basis.

(3) As the context requires, references to §§ 1.1502–91 through 1.1502–96 include references to corresponding provisions of §§ 1.1502–91A through 1.1502–96A. For example, a reference to an ownership change under § 1.1502–92 in § 1.1502–95(b) can include a reference to an ownership change under § 1.1502–92A.

(c) *Loss group*—(1) *Defined. A loss group is a consolidated group that*—

(i) Is entitled to use a net operating loss carryover to the taxable year that did not arise (and is not treated under § 1.1502–21(c) as arising) in a SRLY;

(ii) Has a consolidated net operating loss for the taxable year in which a testing date of the common parent occurs (determined by treating the common parent as a loss corporation); or

(iii) Has a net unrealized built-in loss (determined under paragraph (g) of this section by treating the date on which the determination is made as though it were a change date).

(2) *Coordination with rule that ends separate tracking.* A consolidated group may be a loss group because a member's losses that arose in (or are treated as arising in) a SRLY are treated as described in paragraph (c)(1)(i) of this section. See § 1.1502–96(a).

(3) *Example.* The following example illustrates the principles of this paragraph (c):

Example. Loss group. (i) L and L1 file separate returns and each has a net operating loss carryover arising in Year 1 that is carried over to Year 2. A owns 40 shares and L owns 60 shares of the 100 outstanding shares of L1 stock. At the close of Year 1, L buys the 40 shares of L1 stock from A. For Year 2, L and L1 file a consolidated return. The following is a graphic illustration of these facts:

BILLING CODE 4830–01–U

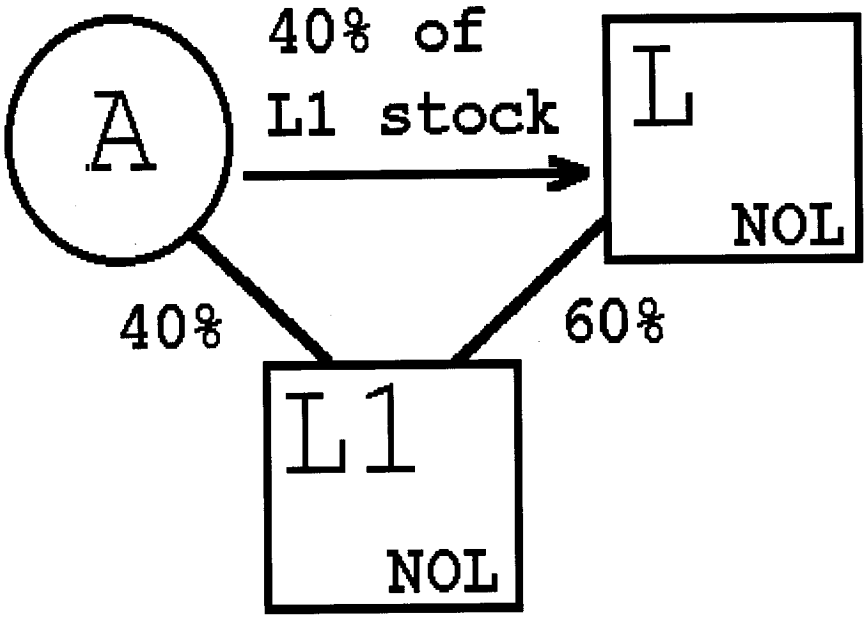

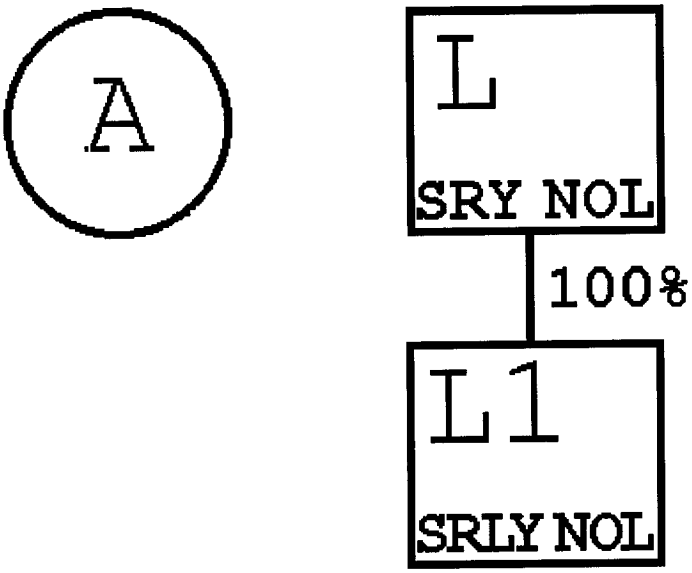

BILLING CODE 4830–01–C

(ii) L and L1 become a loss group at the beginning of Year 2 because the group is entitled to use the Year 1 net operating loss carryover of L, the common parent, which did not arise (and is not treated under § 1.1502–21(c) as arising) in a SRLY. See § 1.1502–94 for rules relating to the application of section 382 with respect to L1's net operating loss carryover from Year 1 which did arise in a SRLY.

(d) *Loss subgroup*—(1) *Net operating loss carryovers*. Two or more corporations that become members of a consolidated group (the current group) compose a loss subgroup if—

(i) They were affiliated with each other in another group (the former group), whether or not the group was a consolidated group;

(ii) They bear the relationship described in section 1504(a)(1) to each other through a loss subgroup parent immediately after they become members of the current group (or are deemed to bear that relationship as a result of an election described in paragraph (d)(4) of this section); and

(iii) At least one of the members carries over a net operating loss that did not arise (and is not treated under § 1.1502–21(c) as arising) in a SRLY with respect to the former group.

(2) *Net unrealized built-in loss*. Two or more corporations that become members of a consolidated group compose a loss subgroup if they—

(i) Have been continuously affiliated with each other for the 5 consecutive year period ending immediately before they become members of the group;

(ii) Bear the relationship described in section 1504(a)(1) to each other through a loss subgroup parent immediately after they become members of the current group (or are deemed to bear that relationship as a result of an election described in paragraph (d)(4) of this section); and

(iii) Have a net unrealized built-in loss (determined under paragraph (g) of this section on the day they become members of the group by treating that day as though it were a change date).

(3) *Loss subgroup parent*. A loss subgroup parent is the corporation that bears the same relationship to the other members of the loss subgroup as a common parent bears to the members of a group.

(4) *Election to treat loss subgroup parent requirement as satisfied*—(i) *In general*. Solely for purposes of paragraphs (d)(1)(i) and (2)(ii) of this section, two or more corporations that become members of a consolidated group at the same time and that were affiliated with each other immediately before becoming members of the group are deemed to bear a section 1504(a)(1) relationship to each other immediately after they become members of the group if the common parent of that group makes an election under this paragraph (d)(4) with respect to those members. See § 1.1502–96(e) for the time and manner of making the election.

(ii) *Members included*. An election under this paragraph (d)(4) includes all corporations that become members of the current group at the same time and that were affiliated with each other immediately before they become members of the current group.

(iii) *Each member included treated as loss subgroup parent*. If the members to which this election applies are a loss subgroup described in paragraph (d)(1) or (2) of this section, then each member is treated as a loss subgroup parent. See § 1.1502–92(b)(1)(iii) for special rules relating to an ownership change of a loss subgroup if the election under this paragraph (d)(4) is made.

(5) *Principal purpose of avoiding a limitation*. The corporations described in paragraphs (d)(1) or (2) of this section do not compose a loss subgroup if any one of them is formed, acquired, or availed of with a principal purpose of avoiding the application of, or increasing any limitation under, section 382. Instead, § 1.1502–94 applies with respect to the attributes of each such corporation. Any member excluded from a loss subgroup, if excluded with a principal purpose of so avoiding or increasing any section 382 limitation, is treated as included in the loss subgroup. This paragraph (d)(5) does not apply solely because, in connection with becoming members of the group, the members of a group (or loss subgroup) are rearranged (or, in the case of the preceding sentence, are not rearranged) to bear a relationship to the other members described in section 1504(a)(1).

(6) *Special rules*. See § 1.1502–95(d) for rules concerning when a corporation ceases to be a member of a loss subgroup, and for certain exceptions that may apply if a member does not continue to satisfy the loss subgroup parent requirement within the current group. See also § 1.1502–96(a) for a special rule regarding the end of separate tracking of SRLY losses of a member that has an ownership change or that has been a member of a group for at least 5 consecutive years.

(7) *Examples*. The following examples illustrate the principles of this paragraph (d):

Example 1. Loss subgroup. (i) P owns all the L stock and L owns all the L1 stock. The P group has a consolidated net operating loss arising in Year 1 that is carried to Year 2. On May 2, Year 2, P sells all the stock of L to A, and L and L1 thereafter file consolidated returns. A portion of the Year 1 consolidated net operating loss is apportioned under § 1.1502–21(b) to each of L and L1, which they carry over to Year 2. The following is a graphic illustration of these facts:

BILLING CODE 4830–01–U

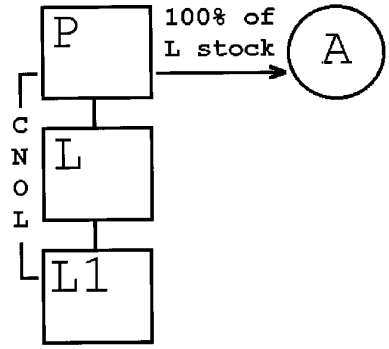

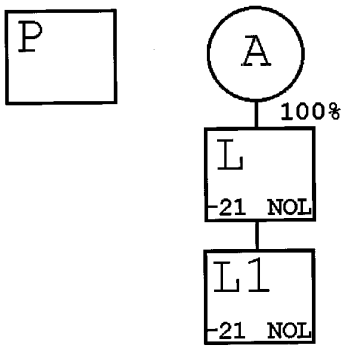

BILLING CODE 4830–01–C

(ii) (a) L and L1 compose a loss subgroup within the meaning of paragraph (d)(1) of this section because—

(A) They were affiliated with each other in the P group (the former group);

(B) They bear a relationship described in section 1504(a)(1) to each other through a loss subgroup parent (L) immediately after they became members of the L group; and

(C) At least one of the members (here, both L and L1) carries over a net operating loss to the L group (the current group) that did not arise in a SRLY with respect to the P group.

(b) Under paragraph (d)(3) of this section, L is the loss subgroup parent of the L loss subgroup.

Example 2. Loss subgroup—section 1504(a)(1) relationship. (i) P owns all the stock of L and L1. L owns all the stock of L2. L1 and L2 own 40 percent and 60 percent of the stock of L3, respectively. The P group has a consolidated net operating loss arising in Year 1 that is carried over to Year 2. On May 22, Year 2, P sells all the stock of L and L1 to P1, the common parent of another consolidated group. The Year 1 consolidated net operating loss is apportioned under § 1.1502–21(b), and each of L, L1, L2, and L3 carries over a portion of such loss to the first consolidated return year of the P1 group ending after the acquisition. The following is a graphic illustration of these facts:

BILLING CODE 4830–01–U

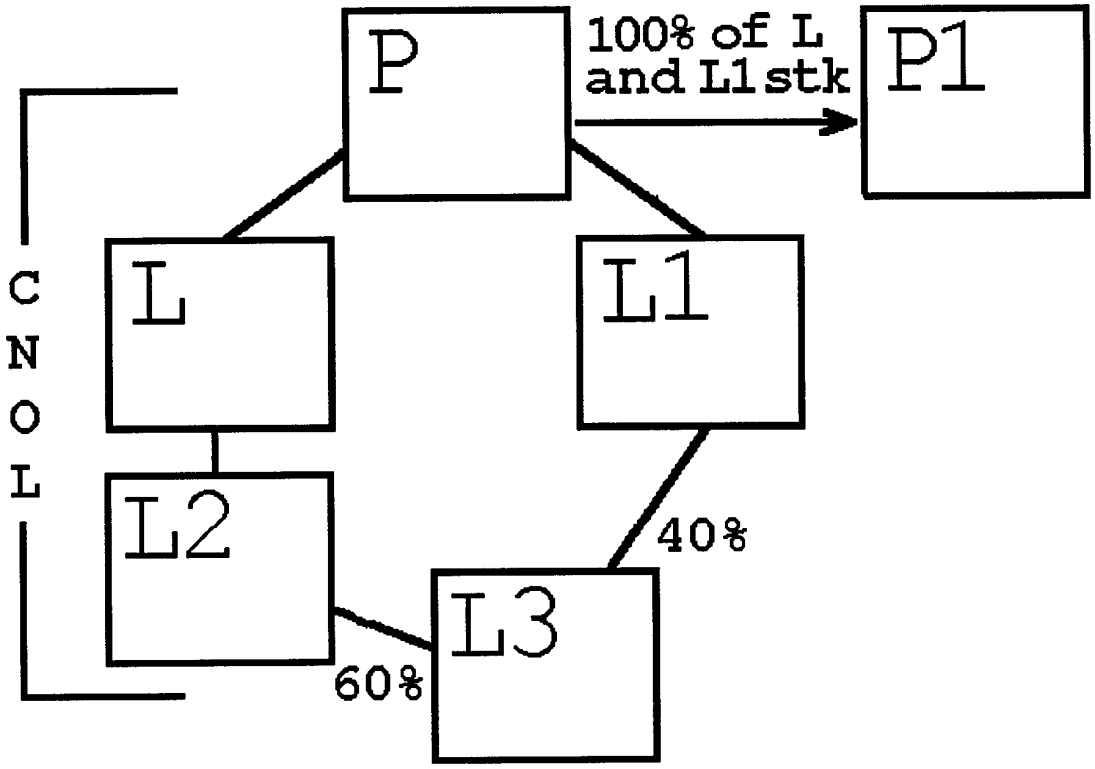

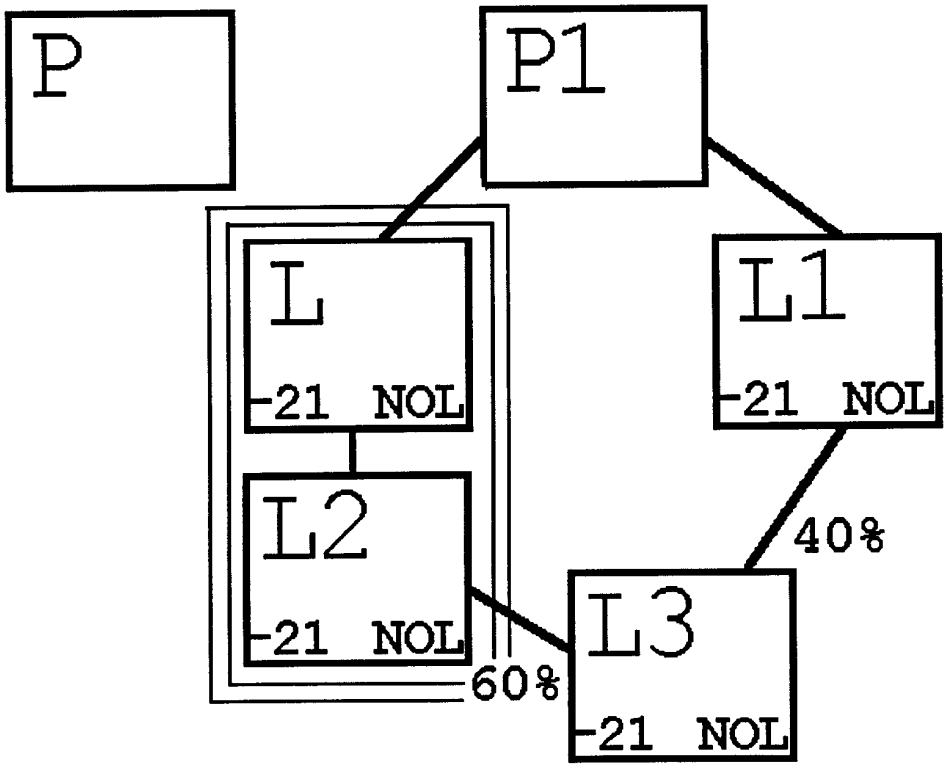

BILLING CODE 4830–01–C

(ii) L and L2 compose a loss subgroup within the meaning of paragraph (d)(1) of this section. Neither L1 nor L3 is included in a loss subgroup because neither bears a relationship described in section 1504(a)(1) through a loss subgroup parent to any other member of the former group immediately after becoming members of the P1 group.

Example 3. Loss subgroup—section 1504(a)(1) relationship. The facts are the same as in *Example 2,* except that the stock of L1 is transferred to L in connection with the sale of the L stock to P1. L, L1, L2, and L3 compose a loss subgroup within the meaning of paragraph (d)(1) of this section because—

(i) They were affiliated with each other in the P group (the former group);

(ii) They bear a relationship described in section 1504(a)(1) to each other through a loss subgroup parent (L) immediately after they become members of the P1 group; and

(iii) At least one of the members (here, each of L, L1, L2, and L3) carries over a net operating loss to the P1 group (the current group).

Example 4. Loss subgroup—elective section 1504(a)(1) relationship. The facts are the same as in *Example 2,* except that P1 makes the election under paragraph (d)(4) of this section. The election includes L, L1, L2, and L3 (even though L and L2 would compose a loss subgroup without regard to the election) because they become members of the current group (the P1 group) at the same time and were affiliated with each other in the P group immediately before they became members of the P1 group. As a result of the election, L, L1, L2, and L3 are treated as satisfying the requirement that they bear the relationship described in section 1504(a)(1) to each other through a loss subgroup parent immediately after they become members of the P1 group. L, L1, L2, and L3 compose a loss subgroup within the meaning of paragraph (d)(1) of this section.

(e) *Pre-change consolidated attribute*—(1) *Defined.* A pre-change consolidated attribute of a loss group is—

(i) Any loss described in paragraph (c)(1)(i) or (ii) of this section (relating to the definition of loss group) that is allocable to the period ending on or before the change date; and

(ii) Any recognized built-in loss of the loss group.

(2) *Example.* The following example illustrates the principle of this paragraph (e):

Example. Pre-change consolidated attribute. (i) The L group has a consolidated net operating loss arising in Year 1 that is carried over to Year 2. The L loss group has an ownership change at the beginning of Year 2.

(ii) The net operating loss carryover of the L loss group from Year 1 is a pre-change consolidated attribute because the L group was entitled to use the loss in Year 2 and therefore the loss was described in paragraph (c)(1)(i) of this section. Under paragraph (a)(2)(i) of this section, the amount of consolidated taxable income of the L group for Year 2 that may be offset by this loss carryover may not exceed the consolidated section 382 limitation of the L group for that year. See § 1.1502–93 for rules relating to the computation of the consolidated section 382 limitation.

(f) *Pre-change subgroup attribute*—(1) *Defined.* A pre-change subgroup attribute of a loss subgroup is—

(i) Any net operating loss carryover described in paragraph (d)(1)(iii) of this section (relating to the definition of loss subgroup); and

(ii) Any recognized built-in loss of the loss subgroup.

(2) *Example.* The following example illustrates the principle of this paragraph (f):

Pre-change subgroup attribute. (i) P is the common parent of a consolidated group. P owns all the stock of L, and L owns all the stock of L1. L2 is not a member of an affiliated group, and has a net operating loss arising in Year 1 that is carried over to Year 2. On December 11, Year 2, L1 acquires all the stock of L2, causing an ownership change of L2. During Year 2, the P group has a consolidated net operating loss that is carried over to Year 3. On November 2, Year 3, M acquires all the L stock from P. M, L, L1, and L2 thereafter file consolidated returns. All of the P group Year 2 consolidated net operating loss is apportioned under § 1.1502–21(b) to L and L2, which they carry over to the M group.

(ii)(a) L, L1, and L2 compose a loss subgroup because—

(1) They were affiliated with each other in the P group (the former group);

(2) They bear a relationship described in section 1504(a)(1) to each other through a loss subgroup parent (L) immediately after they became members of the L group; and

(3) At least one of the members (here, both L and L2) carries over a net operating loss to the M group (the current group) that is described in paragraph (d)(1)(iii) of this section.

(b) For this purpose, L2's loss from Year 1 that was a SRLY loss with respect to the P group (the former group) is described in paragraph (d)(1)(iii) of this section because L2 had an ownership change on becoming a member of the P group (see § 1.1502–96(a)) on December 11, Year 2. Starting on December 12, Year 2, the P group no longer separately tracked owner shifts of the stock of L1 with respect to the Year 1 loss. M's acquisition results in an ownership change of L, and therefore the L loss subgroup under § 1.1502–92(a)(2). See § 1.1502–93 for rules governing the computation of the subgroup section 382 limitation.

(iii) In the M group, L2's Year 1 loss continues to be subject to a section 382 limitation resulting from the ownership change that occurred on December 11, Year 2. See § 1.1502–96(c).

(g) *Net unrealized built-in gain and loss*—(1) *In general.* The determination whether a consolidated group (or loss subgroup) has a net unrealized built-in gain or loss under section 382(h)(3) is based on the aggregate amount of the separately computed net unrealized built-in gains or losses of each member that is included in the group (or loss subgroup) under paragraph (g)(2) of this section, including items of built-in income and deduction described in section 382(h)(6). Thus, for example, amounts deferred under section 267, or under § 1.1502–13 (other than amounts deferred with respect to the stock of a member (or an intercompany obligation) included in the group (or loss subgroup) under paragraph (g)(2) of this section) are built-in items. The threshold requirement under section 382(h)(3)(B) applies on an aggregate basis and not on a member-by-member basis. The separately computed amount of a member included in a group or loss subgroup does not include any unrealized built-in gain or loss on stock (including stock described in section 1504(a)(4) and § 1.382–2T(f)(18)(ii) and (iii)) of another member included in the group or loss subgroup (or an intercompany obligation). However, a member of a group or loss subgroup includes in its separately computed amount the unrealized built-in gain or loss on stock (but not on an intercompany obligation) of another member not included in the group or loss subgroup. If a member is not included in the determination whether a group (or subgroup) has a net unrealized built-in loss under paragraph (g)(2)(ii) or (iv) of this section, that member is not included in the loss group or loss subgroup. See § 1.1502–94(c) (relating to built-in gain or loss of a new loss member) and § 1.1502–96(a) (relating to the end of separate tracking of certain losses).

(2) *Members included*—(i) *Consolidated group with a net operating loss.* The members included in the determination whether a consolidated group described in paragraph (c)(1)(i) or (ii) of this section (relating to loss groups with net operating losses) has a net unrealized built-in gain are all members of the consolidated group on the day that the determination is made.

(ii) *Determination whether a consolidated group has a net unrealized built-in loss.* The members included in the determination whether a consolidated group is a loss group described in paragraph (c)(1)(iii) of this section are—

(A) The common parent and all other members that have been affiliated with the common parent for the 5 consecutive year period ending on the day that the determination is made;

(B) Any other member that has a net unrealized built-in loss determined under paragraph (g)(1) of this section on the date that the determination is made, and that is neither a new loss member described in § 1.1502–94(a)(1)(ii) nor a member of a loss subgroup described in paragraph (d)(2) of this section;

(C) Any new loss member described in § 1.1502–94(a)(1)(ii) that has a net unrealized built-in gain determined under paragraph (g)(1) of this section on the day that the determination is made; and

(D) The members of a loss subgroup described in paragraph (d)(2) of this section if the members of the subgroup have, in the aggregate, a net unrealized built-in gain on the day that the determination is made.

(iii) *Loss subgroup with net operating loss carryovers.* The members included in the determination whether a loss subgroup described in paragraph (d)(1) of this section (relating to loss subgroups with net operating loss carryovers) has a net unrealized built-in gain are all members of the loss subgroup on the day that the determination is made.

(iv) *Determination whether subgroup has a net unrealized built-in loss.* The members included in the determination whether a subgroup has a net unrealized built-in loss are those members described in paragraphs (d)(2)(i) and (ii) of this section.

(v) *Separate determination of section 382 limitation for recognized built-in losses and net operating losses.* In determining whether a loss group described in paragraph (c)(1)(i) or (ii) of this section (relating to loss groups that have net operating loss carryovers) has a net unrealized built-in gain which, if recognized, increases the consolidated section 382 limitation, the group includes, under paragraph (g)(2)(i) of this section, all of its members on the day the determination is made. Under paragraph (g)(2)(ii) of this section, however, for purposes of determining whether a group has a net unrealized built-in loss described in paragraph (c)(1)(iii) of this section, not all members of the consolidated group may be included. Thus, a consolidated group may have recognized built-in gains that increase the amount of consolidated taxable income that may be offset by its pre-change net operating loss carryovers that did not arise (and are not treated as arising) in a SRLY, and also may have recognized built-in losses the absorption of which is limited. Similar results may obtain for loss subgroups under paragraphs (g)(2)(iii) and (iv) of this section. See § 1.1502–93(c)(2) for rules prohibiting the use of recognized built-in gains to increase the amount of consolidated taxable income that can be offset by recognized built-in losses.

(3) *Coordination with rule that ends separate tracking.* See § 1.1502–96(a) for special rules relating to members (or loss subgroups) that have an ownership change within six months before, on, or after becoming a member of the group.

(4) *Acquisitions of built-in gain or loss assets.* A member of a consolidated group (or loss subgroup) may not, in determining its separately computed net unrealized built-in gain or loss, include any gain or loss with respect to assets acquired with a principal purpose to affect the amount of its net unrealized built-in gain or loss. A group (or loss subgroup) may not, in determining its net unrealized built-in gain or loss, include any gain or loss of a member acquired with a principal purpose to affect the amount of its net unrealized built-in gain or loss.

(5) *Indirect ownership.* A member's separately computed net unrealized built-in gain or loss is adjusted to the extent necessary to prevent any duplication of unrealized gain or loss attributable to the member's indirect ownership interest in another member through a nonmember if the member has a 5-percent or greater ownership interest in the nonmember.

(6) *Common parent not common parent for five years.* If the common parent has become the common parent of an existing group within the previous 5 year period in a transaction described in § 1.1502–75(d)(2)(ii) or (3), appropriate adjustments must be made in applying paragraph (g)(2)(ii)(A) of this section so that corporations that have not been members of the group for five years are not included. In such a case, references to the common parent in paragraph (g)(2)(ii)(A) of this section are to the former common parent. Thus, members of the group remaining in existence (including the new common parent) that have not been affiliated with the former common parent (or that have not been members of that group) for the five consecutive year period ending on the day that the determination is made are not included under paragraph (g)(2)(ii)(A) of this section. See, however, § 1.1502–96(a)(2) for special rules relating to members (or loss subgroups) that have an ownership change within six months before, on, or after the time that the member becomes a member of the group.

(h) *Recognized built-in gain or loss*—(1) *In general.* [Reserved].

(2) *Disposition of stock or an intercompany obligation of a member.* Gain or loss recognized by a member on the disposition of stock (including stock described in section 1504(a)(4) and § 1.382–2T(f)(18)(ii) and (iii)) of another member is treated as a recognized gain or loss for purposes of section 382(h)(2) (unless disallowed under § 1.1502–20 or otherwise), even though gain or loss on such stock was not included in the determination of a net unrealized built-in gain or loss under paragraph (g)(1) of this section. Gain or loss recognized by a member with respect to an intercompany obligation is treated as recognized gain or loss only to the extent (if any) the transaction gives rise to aggregate income or loss within the consolidated group.

(3) *Intercompany transactions.* Gain or loss that is deferred under provisions such as section 267 and § 1.1502–13 is treated as recognized built-in gain or loss only to the extent taken into account by the group during the recognition period. See also § 1.1502–13(c)(7) *Example 10.*

(4) *Exchanged basis property.* If the adjusted basis of any asset is determined, directly or indirectly, in whole or in part, by reference to the adjusted basis of another asset held by the member at the beginning of the recognition period, the asset is treated, with appropriate adjustments, as held by the member at the beginning of the recognition period.

(i) [Reserved]

(j) *Predecessor and successor corporations.* A reference in this section and §§ 1.1502–92 through 1.1502–99 to a corporation, member, common parent, loss subgroup parent, or subsidiary includes, as the context may require, a reference to a predecessor or successor corporation as defined in § 1.1502–1(f)(4). For example, the determination whether a successor satisfies the continuous affiliation requirement of paragraph (d)(2)(i) or (g)(2)(ii) of this section is made by reference to its predecessor.

§ 1.1502–92 Ownership change of a loss group or a loss subgroup.

(a) *Scope.* This section provides rules for determining if there is an ownership change for purposes of section 382 with respect to a loss group or a loss subgroup. See § 1.1502–94 for special rules for determining if there is an ownership change with respect to a new loss member and § 1.1502–96(b) for special rules for determining if there is an ownership change of a subsidiary.

(b) *Determination of an ownership change*—(1) *Parent change method*—(i) *Loss group.* A loss group has an ownership change if the loss group's common parent has an ownership change under section 382 and the regulations thereunder. Solely for

purposes of determining whether the common parent has an ownership change—

(A) The losses described in § 1.1502–91(c) are treated as net operating losses (or a net unrealized built-in loss) of the common parent; and

(B) The common parent determines the earliest day that its testing period can begin by reference to only the attributes that make the group a loss group under § 1.1502–91(c).

(ii) *Loss subgroup.* A loss subgroup has an ownership change if the loss subgroup parent has an ownership change under section 382 and the regulations thereunder. The principles of § 1.1502–95(b) (relating to ceasing to be a member of a consolidated group) apply in determining whether the loss subgroup parent has an ownership change. Solely for purposes of determining whether the loss subgroup parent has an ownership change—

(A) The losses described in § 1.1502–91(d) are treated as net operating losses (or a net unrealized built-in loss) of the loss subgroup parent;

(B) The day that the members of the loss subgroup become members of the group (or a loss subgroup) is treated as a testing date within the meaning of § 1.382–2(a)(4); and

(C) The loss subgroup parent determines the earliest day that its testing period can begin under § 1.382–2T(d)(3) by reference to only the attributes that make the members a loss subgroup under § 1.1502–91(d).

(iii) *Special rule if election regarding section 1504(a)(1) relationship is made*—(A) *Ownership change of deemed loss subgroup parent is an ownership change of loss subgroup.* If the common parent makes an election under § 1.1502–91(d)(4), each of the members in the loss subgroup is treated as the loss subgroup parent for purposes of determining whether the loss subgroup has an ownership change under section 382 and the regulations thereunder on or after the day the members become members of the group.

(B) *Exception.* Paragraph (b)(1)(iii)(A) of this section does not apply to cause an ownership change of a loss subgroup if a deemed loss subgroup parent has an ownership change upon (or after) ceasing to be a member of the current group.

(2) *Examples.* The following examples illustrate the principles of this paragraph (b):

Example 1. Loss group—ownership change of the common parent. (i) A owns all the L stock. L owns 80 percent and B owns 20 percent of the L1 stock. For Year 1, the L group has a consolidated net operating loss that resulted from the operations of L1 and that is carried over to Year 2. The value of the L stock is $1000. The total value of the L1 stock is $600 and the value of the L1 stock held by B is $120. The L group is a loss group under § 1.1502–91(c)(1) because it is entitled to use its net operating loss carryover from Year 1. On August 15, Year 2, A sells 51 percent of the L stock to C. The following is a graphic illustration of these facts:

BILLING CODE 4830–01–U

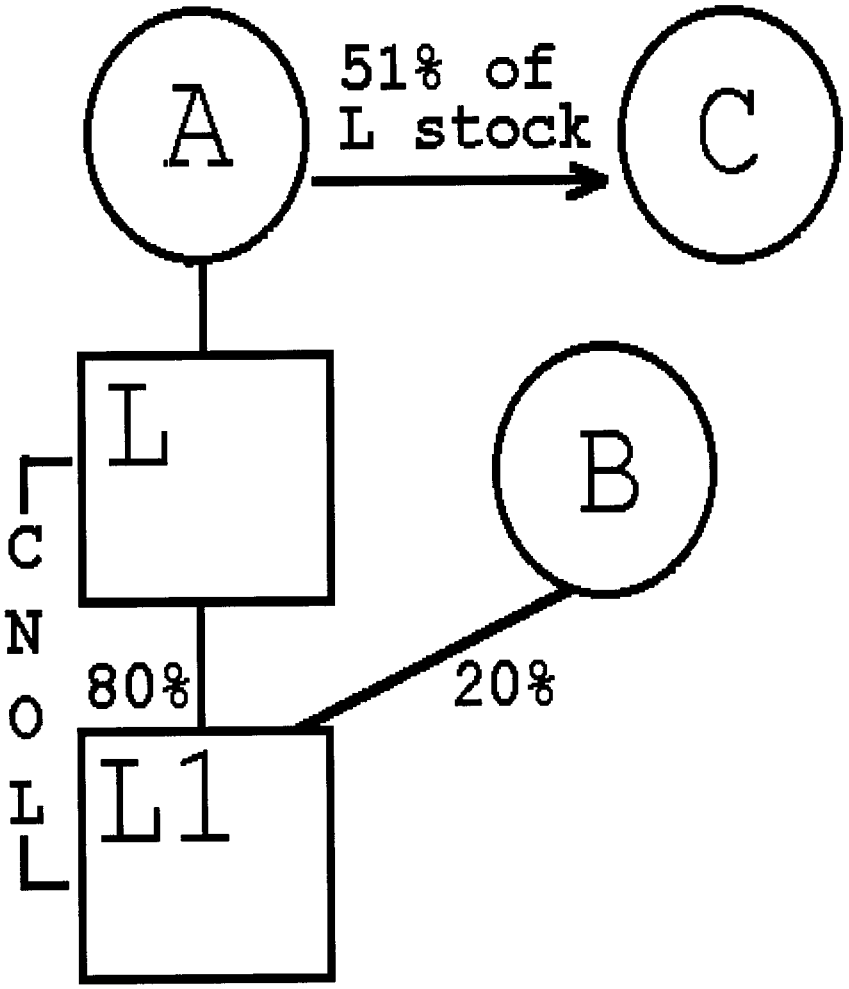

BILLING CODE 4830–01–C

(ii) Under paragraph (b)(1)(i) of this section, section 382 and the regulations thereunder are applied to L to determine whether it (and therefore the L loss group) has an ownership change with respect to its net operating loss carryover from Year 1 attributable to L1 on August 15, Year 2. The sale of the L stock to C causes an ownership change of L under § 1.382–2T and of the L loss group under paragraph (b)(1)(i) of this section. The amount of consolidated taxable income of the L loss group for any post-change taxable year that may be offset by its pre-change consolidated attributes (that is, the net operating loss carryover from Year 1 attributable to L1) may not exceed the consolidated section 382 limitation for the L loss group for the taxable year.

Example 2. Loss group—owner shifts of subsidiaries disregarded. (i) The facts are the same as in *Example 1*, except that on August 15, Year 2, A sells only 49 percent of the L stock to C and, on December 12, Year 3, in an unrelated transaction, B sells the 20 percent of the L1 stock to D. A's sale of the L stock to C does not cause an ownership change of L under § 1.382-2T nor of the L loss group under paragraph (b)(1)(i) of this section. The following is a graphic illustration of these facts:

BILLING CODE 4830–01–U

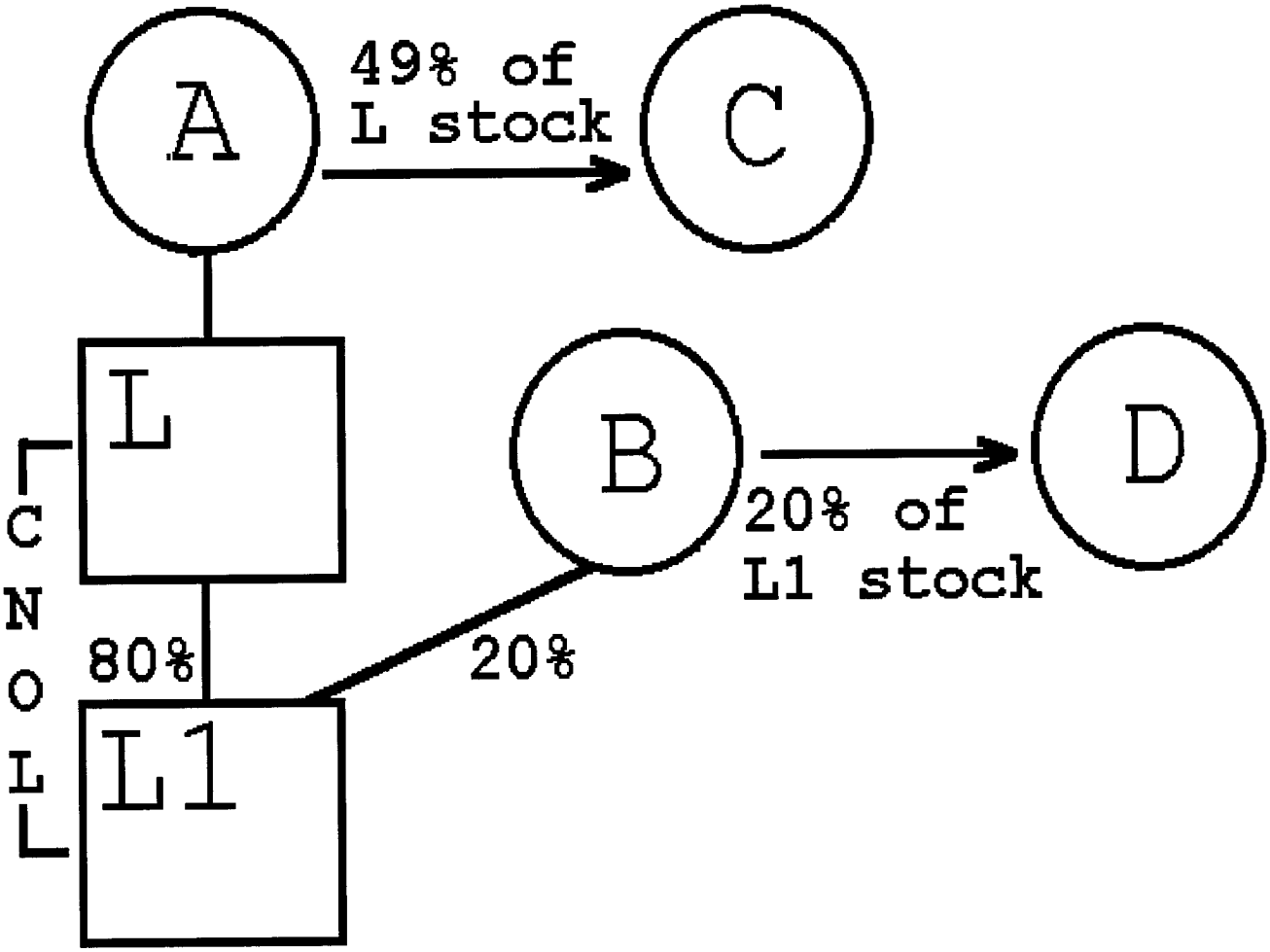

BILLING CODE 4830–01–C

(ii) B's subsequent sale of L1 stock is not taken into account for purposes of determining whether the L loss group has an ownership change under paragraph (b)(1)(i) of this section, and, accordingly, there is no ownership change of the L loss group. See paragraph (c) of this section, however, for a supplemental ownership change method that would apply to cause an ownership change if the purchases by C and D were pursuant to a plan or arrangement and certain other conditions are satisfied.

Example 3. Loss subgroup—ownership change of loss subgroup parent controls. (i) *P owns all the L stock. L owns 80 percent and A owns 20 percent of the L1 stock. The P group has a consolidated net operating loss arising in Year 1 that is carried over to Year 2. On September 9, Year 2, P sells 51 percent of the L stock to B, and L1 is apportioned a portion of the Year 1 consolidated net operating loss under § 1.1502–21(b), which it carries over to its next taxable year. L and L1 file a consolidated return for their first taxable year ending after the sale to B. The following is a graphic illustration of these facts:*

BILLING CODE 4830–01–U

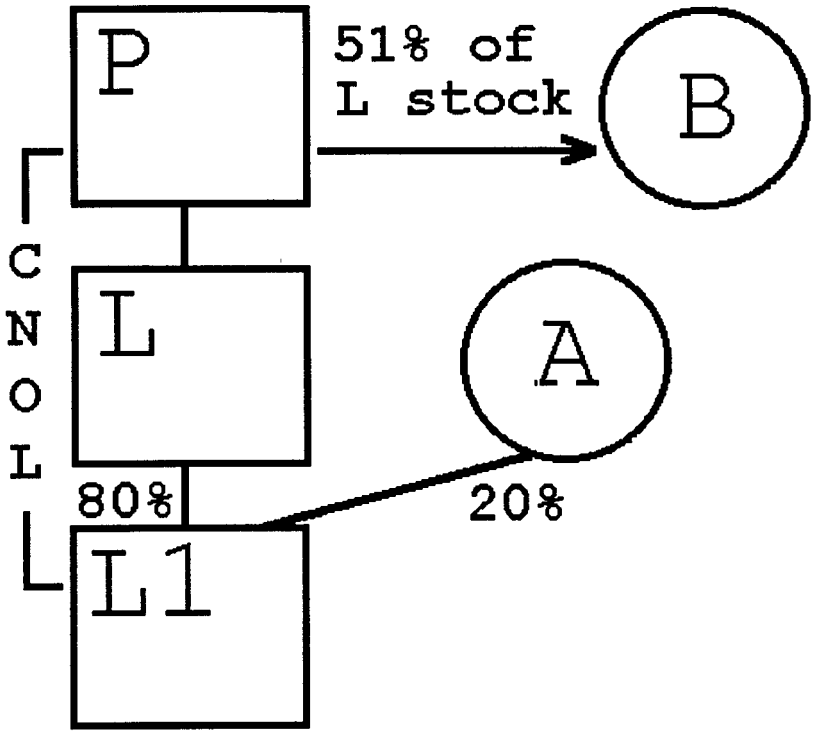

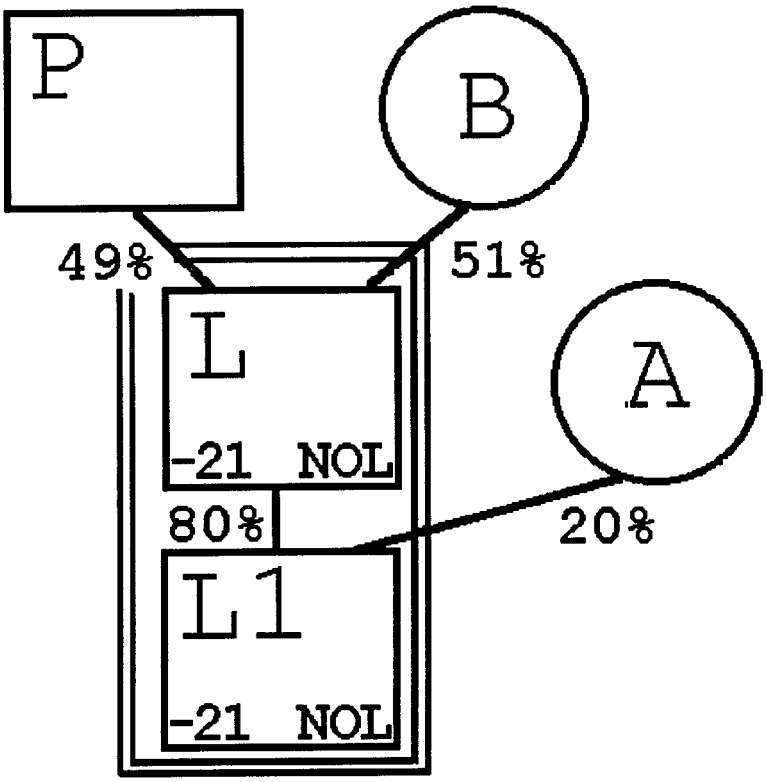

BILLING CODE 4830–01–C

(ii) Under § 1.1502–91(d)(1), L and L1 compose a loss subgroup on September 9, Year 2, the day that they become members of the L group. Under paragraph (b)(1)(ii) of this section, section 382 and the regulations thereunder are applied to L to determine whether it (and therefore the L loss subgroup) has an ownership change with respect to the portion of the Year 1 consolidated net operating loss that is apportioned to L1 on September 9, Year 2. L has an ownership change resulting from P's sale of 51 percent of the L stock to A. Therefore, the L loss subgroup has an ownership change with respect to that loss.

Example 4. Loss group and loss subgroup—contemporaneous ownership changes. (i) A owns all the stock of corporation M, M owns 35 percent and B owns 65 percent of the L stock, and L owns all the L1 stock. The L group has a consolidated net operating loss arising in Year 1 that is carried over to Year 2. On May 19, Year 2, B sells 45 percent of the L stock to M for cash. M, L, and L1 thereafter file consolidated returns. L and L1 are each apportioned a portion of the Year 1 consolidated net operating loss, which they carry over to the M group's Year 2 and Year 3 consolidated return years. The M group has a consolidated net operating loss arising in Year 2 that is carried over to Year 3. On June 9, Year 3, A sells 70 percent of the M stock to C. The following is a graphic illustration of these facts:

BILLING CODE 4830–01–U

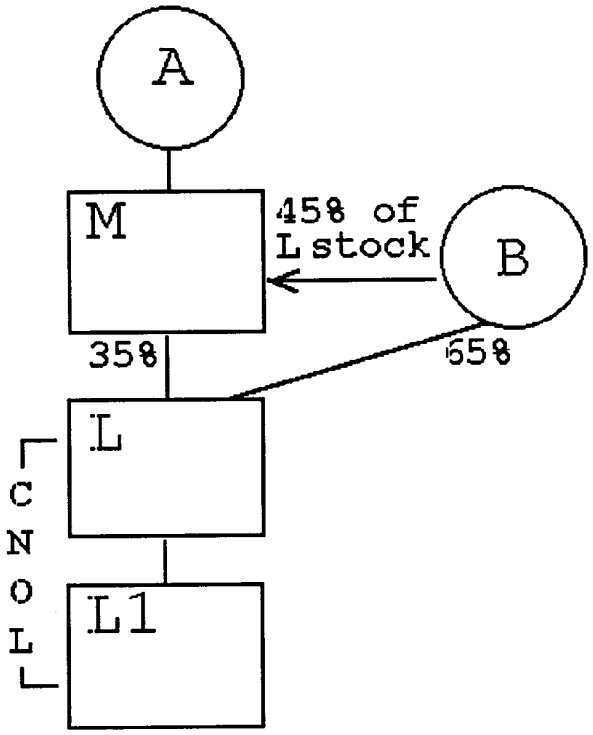

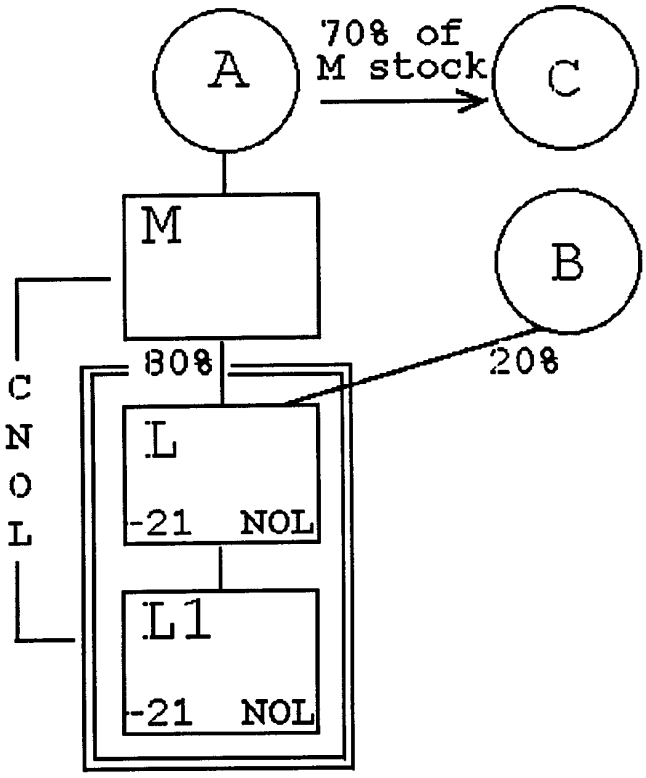

BILLING CODE 4830–01–C

(ii) Under § 1.1502–91(d)(1), L and L1 compose a loss subgroup on May 19, Year 2, the day they become members of the M group. Under paragraph (b)(1)(ii) of this section, section 382 and the regulations thereunder are applied to L to determine whether L (and therefore the L loss subgroup) has an ownership change with respect to the loss carryovers from Year 1 on May 19, Year 2, a testing date because of B's sale of L stock to M. The sale of L stock to M results in only a 45 percentage point increase in A's ownership of L stock. Thus, there is no ownership change of L (or the L loss subgroup) with respect to those loss carryovers under paragraph (b)(1)(ii) of this section on that day.

(iii) June 9, Year 3, is also a testing date with respect to the L loss subgroup because of A's sale of M stock to C. The sale results in a 56 percentage point increase in C's ownership of L stock, and L has an ownership change. Therefore, the L loss subgroup has an ownership change on that day with respect to the loss carryovers from Year 1.

(iv) Paragraph (b)(1)(i) of this section requires that section 382 and the regulations thereunder be applied to M to determine whether M (and therefore the M loss group) has an ownership change with respect to the net operating loss carryover from Year 2 on June 9, Year 3, a testing date because of A's sale of M stock to C. The sale results in a 70 percentage point increase in C's ownership of M stock, and M has an ownership change. Therefore, the M loss group has an ownership change on that day with respect to that loss carryover.

Example 5—Deemed subgroup parent. (i) P owns all the stock of L and L1 and 80 percent of the stock of T. A owns the remaining 20 percent of the stock of T. L1 owns all the stock of L2. P1, which owns 60 percent of the stock of P, acquires, at the beginning of Year 2, the T, L, and L1 stock owned by P, and T, L, L1, and L2 become members of the P1 group. The P group has a consolidated net operating loss arising in Year 1 that is carried over to Year 2. L, L1, and L2 are each apportioned a portion of the Year 1 consolidated net operating loss under § 1.1502–21(b), which they carry over to the P1 group's Year 2 and Year 3 consolidated return years. P1 makes the election described in § 1.1502–91(d)(4) to treat T, L, L1 and L2 as meeting the section 1504(a)(1) requirement of § 1.1502–91(d)(1)(ii). As a result of the election, T, L, L1 and L2 compose a loss subgroup and T, L, L1, and L2 are each treated as the loss subgroup parent for purposes of this paragraph (b). Because of P1's indirect ownership of T, L, L1, and L2 prior to P1's acquisition of the T, L, and L1 stock, P1's acquisition does not cause an ownership change of the loss subgroup.

(ii) On February 2, Year 3, L1 sells all of the stock of L2 to B. Although L2 is treated as a loss subgroup parent, the determination whether the loss subgroup comprised of T, L, and L1 has an ownership change under this paragraph (b) is made without regard to the sale of L2 because L2's ownership change occurred upon ceasing to be a member of the P1 group. See § 1.1502–95(b) to determine the application of section 382 to L2 when L2 ceases to be a member of the P1 group and the T, L, L1 and L2 loss subgroup.

(iii) On March 26, Year 3, A sells her 20 percent minority stock interest in T to C . C's purchase, together with the 32 percentage point owner shift effected by P1's acquisition of the T stock at the beginning of Year 2, causes an ownership change of T, and therefore of the loss subgroup comprised of T, L, and L1.

(3) *Special adjustments*—(i) *Common parent succeeded by a new common parent.* For purposes of determining if a loss group has an ownership change, if the common parent of a loss group is succeeded or acquired by a new common parent and the loss group remains in existence, the new common parent is treated as a continuation of the former common parent with appropriate adjustments to take into account shifts in ownership of the former common parent during the testing period (including shifts that occur incident to the common parent's becoming the former common parent). A new common parent may be a continuation of the former common parent even if, under § 1.1502–91(g)(2)(ii), the new common parent is not included in determining whether the group has a net unrealized built-in loss.

(ii) *Newly created loss subgroup parent.* For purposes of determining if a loss subgroup has an ownership change, if the member that is the loss subgroup parent has not been the loss subgroup parent for at least 3 years as of a testing date, appropriate adjustments must be made to take into account owner shifts of members of the loss subgroup so that the structure of the loss subgroup does not have the effect of avoiding an ownership change under section 382. (See paragraph (b)(3)(iii), *Example 3* of this section.)

(iii) *Examples.* The following examples illustrate the principles of this paragraph (b)(3):

Example 1. New common parent acquires old common parent. (i) A, who owns all the L stock, sells 30 percent of the L stock to B on August 26, Year 1. L owns all the L1 stock. The L group has a consolidated net operating loss arising in Year 1 that is carried over to Year 3. On July 16, Year 2, A and B transfer their L stock to a newly created holding company, HC, in exchange for 70 percent and 30 percent, respectively, of the HC stock. HC, L, and L1 thereafter file consolidated returns. Under the principles of § 1.1502–75(d), the L loss group is treated as remaining in existence, with HC taking the place of L as the new common parent of the loss group. The following is a graphic illustration of these facts:

BILLING CODE 4830–01–U

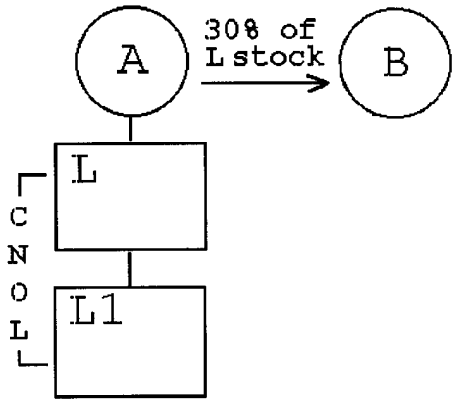

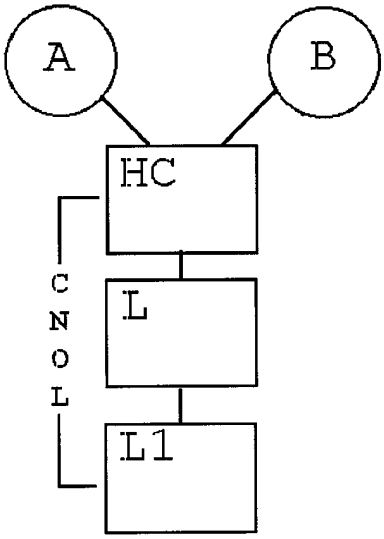

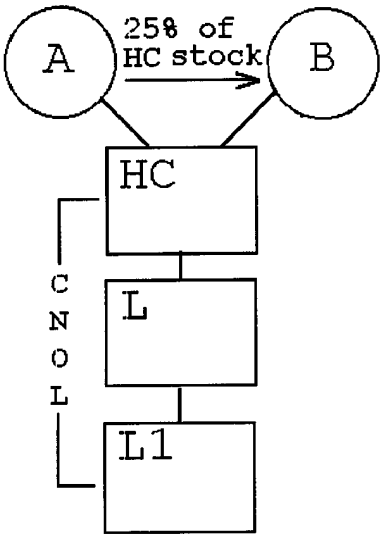

BILLING CODE 4830–01–C

(ii) On November 11, Year 3, A sells 25 percent of the HC stock to B. For purposes of determining if the L loss group has an ownership change under paragraph (b)(1)(i) of this section on November 11, Year 3, HC is treated as a continuation of L under paragraph (b)(4)(i) of this section because it acquired L and became the common parent without terminating the L loss group. Accordingly, HC's testing period commences on January 1, Year 1, the first day of the taxable year of the L loss group in which the consolidated net operating loss that is carried over to Year 3 arose (see § 1.382–2T(d)(3)(i)). Immediately after the close of November 11, Year 3, B's percentage ownership interest in the common parent of the loss group (HC) has increased by 55 percentage points over its lowest percentage ownership during the testing period (zero percent). Accordingly, HC and the L loss group have an ownership change on that day.

Example 2. New common parent in case in which common parent ceases to exist. (i) A, B, and C each own one-third of the L stock. L owns all the L1 stock. The L group has a consolidated net operating loss arising in Year 2 that is carried over to Year 3. On November 22, Year 3, L is merged into P, a corporation owned by D, and L1 thereafter files consolidated returns with P. A, B, and C, as a result of owning stock of L, own 90 percent of P's stock after the merger. D owns the remaining 10 percent of P's stock. The merger of L into P qualifies as a reverse acquisition of the L group under § 1.1502–75(d)(3)(i), and the L loss group is treated as remaining in existence, with P taking the place of L as the new common parent of the L group. The following is a graphic illustration of these facts:

BILLING CODE 4830–01–U

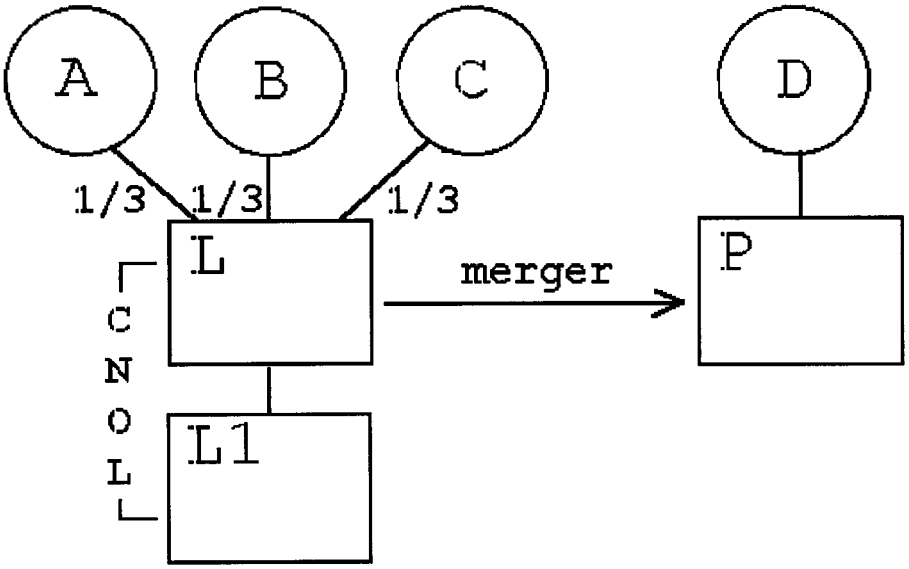

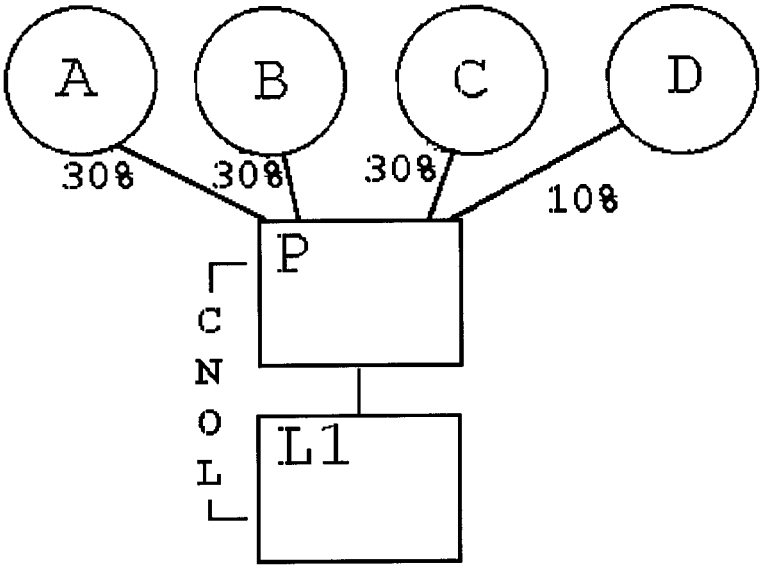

BILLING CODE 4830–01–C

(ii) For purposes of determining if the L loss group has an ownership change on November 22, Year 3, the day of the merger, P is treated as a continuation of L so that the testing period for P begins on January 1, Year 2, the first day of the taxable year of the L loss group in which the consolidated net operating loss that is carried over to Year 3 arose. Immediately after the close of November 22, Year 3, D is the only 5-percent shareholder that has increased his ownership interest in P during the testing period (from zero to 10 percentage points).

(iii) The facts are the same as in paragraph (i) of this *Example 2,* except that A has held 23⅓ shares (23⅓ percent) of L's stock for five years, and A purchased an additional 10 shares of L stock from E two years before the merger. Immediately after the close of the day of the merger (a testing date), A's ownership interest in P, the common parent of the L loss group, has increased by 6⅔ percentage points over A's lowest percentage ownership during the testing period (23⅓ percent to 30 percent).

(iv) The facts are the same as in (i) of this *Example 2,* except that P has a net operating loss arising in Year 1 that is carried to the first consolidated return year ending after the day of the merger. Solely for purposes of determining whether the L loss group has an ownership change under paragraph (b)(1)(i) of this section, the testing period for P commences on January 1, Year 2. P does not determine the earliest day for its testing period by reference to its net operating loss carryover from Year 1, which §§ 1.1502–1(f)(3) and 1.1502–75(d)(3)(i) treat as arising in a SRLY. See § 1.1502–94 to determine the application of section 382 with respect to P's net operating loss carryover.

Example 3. Newly acquired loss subgroup parent. (i) P owns all the L stock and L owns all the L1 stock. The P group has a consolidated net operating loss arising in Year 1 that is carried over to Year 3. On January 19, Year 2, L issues a 20 percent stock interest to B. On February 5, Year 3, P contributes its L stock to a newly formed subsidiary, HC, in exchange for all the HC stock, and distributes the HC stock to its sole shareholder A. HC, L, and L1 thereafter file consolidated returns. A portion of the P group's Year 1 consolidated net operating loss is apportioned to L and L1 under § 1.1502–21(b) and is carried over to the HC group's year ending after February 5, Year 3. HC, L, and L1 compose a loss subgroup within the meaning of § 1.1502–91(d) with respect to the net operating loss carryovers from Year 1. The following is a graphic illustration of these facts:

BILLING CODE 4830–01–U

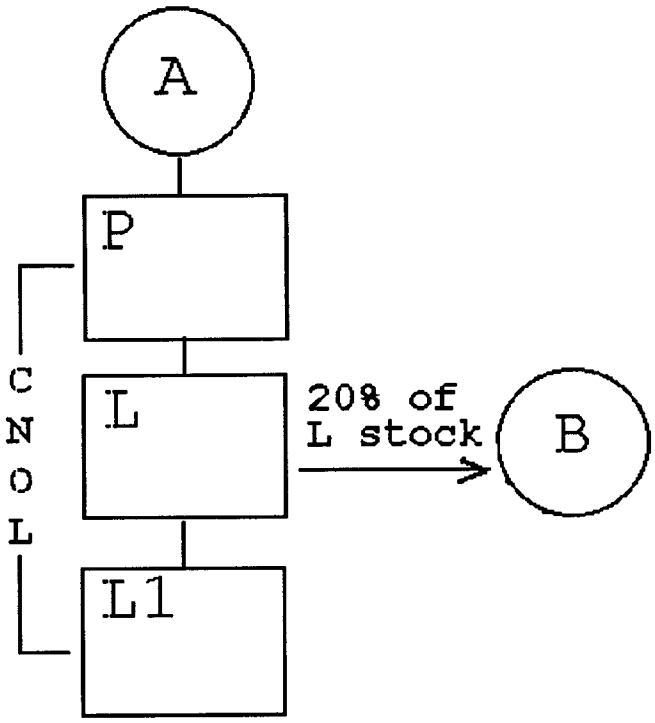

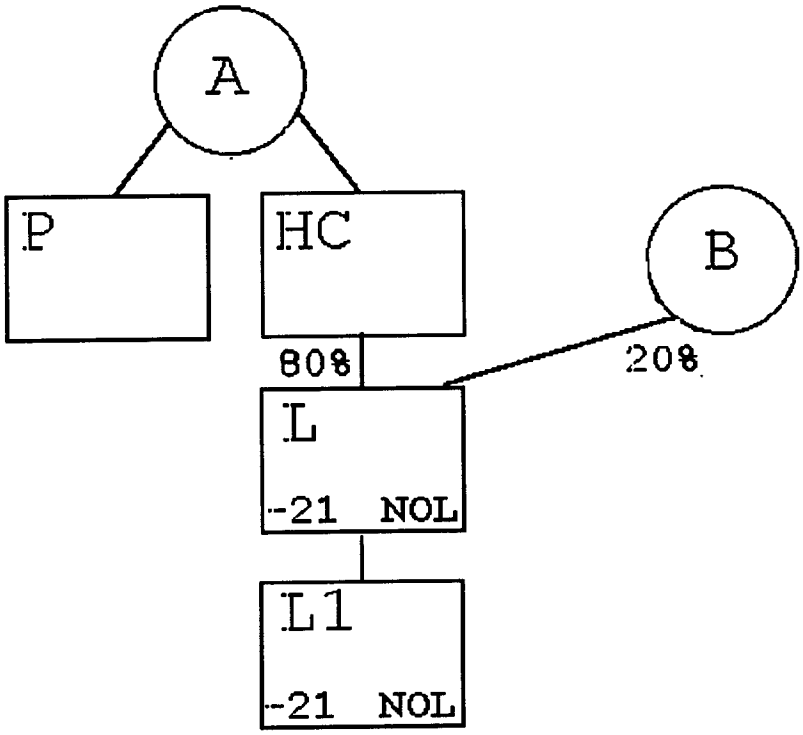

BILLING CODE 4830–01–C

(ii) February 5, Year 3, is a testing date for HC as the loss subgroup parent with respect to the net operating loss carryovers of L and L1 from Year 1. See paragraph (b)(1)(ii)(B) of this section. For purposes of determining whether HC has an ownership change on the testing date, appropriate adjustments must be made with respect to the changes in the percentage ownership of the stock of HC because HC was not the loss subgroup parent for at least 3 years prior to the day on which it became a member of the HC loss subgroup (a testing date). The appropriate adjustments include adjustments so that HC succeeds to the owner shifts of other members of the former group. Thus, HC succeeds to the owner shift of L that resulted from the sale of the 20 percent interest to B in determining whether the HC loss subgroup has an ownership change on February 5, Year 3, and on any subsequent testing date that includes January 19, Year 2.

(4) *End of separate tracking of certain losses.* If § 1.1502–96(a) (relating to the end of separate tracking of attributes) applies to a loss subgroup, then, while one or more members that were included in the loss subgroup remain members of the consolidated group, there is an ownership change with respect to their attributes described in § 1.1502–96(a)(2) only if the consolidated group is a loss group and has an ownership change under paragraph (b)(1)(i) of this section (or such a member has an ownership change under § 1.1502–96(b) (relating to ownership changes of subsidiaries)). If, however, the loss subgroup has had an ownership change before § 1.1502–96(a) applies, see § 1.1502–96(c) for the continuing application of the subgroup's section 382 limitation with respect to its pre-change subgroup attributes.

(c) *Supplemental rules for determining ownership change*—

(1) *Scope.* This paragraph (c) contains a supplemental rule for determining whether there is an ownership change of a loss group (or loss subgroup). It applies in addition to, and not instead of, the rules of paragraph (b) of this section. Thus, for example, if the common parent of the loss group has an ownership change under paragraph (b) of this section, the loss group has an ownership change even if, by applying this paragraph (c), the common parent would not have an ownership change. This paragraph (c) does not apply in determining an ownership change of a loss subgroup for which an election under § 1.1502–91(d)(4) is made.

(2) *Cause for applying supplemental rule.* This paragraph (c) applies to a loss group (or loss subgroup) if—

(i) Any 5-percent shareholder of the common parent (or loss subgroup parent) increases its percentage ownership interest in the stock of both—

(A) A subsidiary of the loss group (or loss subgroup) other than by a direct or indirect acquisition of stock of the common parent (or loss subgroup parent); and

(B) The common parent (or loss subgroup parent);

(ii) Those increases occur within a 3 year period ending on any day of a consolidated return year or, if shorter, the period beginning on the first day following the most recent ownership change of the loss group (or loss subgroup); and

(iii) Either—

(A) The common parent (or loss subgroup parent) has actual knowledge of the increase in the 5-percent shareholder's ownership interest in the stock of the subsidiary (or has actual knowledge of the plan or arrangement described in paragraph (c)(3)(i) of this section) before the date that the group's income tax return is filed for the taxable year that includes the date of that increase; or

(B) At any time during the period described in paragraph (c)(2)(ii) of this section, the 5-percent shareholder of the common parent is also a 5-percent shareholder of the subsidiary (determined without regard to paragraph (c)(3)(i) of this section) whose percentage increase in the ownership of the stock of the subsidiary would be taken into account in determining if the subsidiary has an ownership change (determined as if the subsidiary was a loss corporation and applying the principles of § 1.382–2T(k), including the principles relating to duty to inquire).

(3) *Operating rules.* Solely for purposes of this paragraph (c)—

(i) A 5-percent shareholder of the common parent (or loss subgroup parent) is treated as increasing its ownership interest in the stock of a subsidiary to the extent, if any, that another person or persons increases its percentage ownership interest in the stock of a subsidiary pursuant to a plan or arrangement under which the 5-percent shareholder increases its percentage ownership interest in the common parent (or loss subgroup parent);

(ii) The rules in section 382(l)(3) and §§ 1.382–2T(h) and 1.382–4(d) (relating to constructive ownership) apply with respect to the stock of the subsidiary by treating such stock as stock of a loss corporation; and

(iii) In the case of a loss subgroup, a subsidiary includes any member of the loss subgroup other than the loss subgroup parent. (A loss subgroup parent is, however, a subsidiary of the loss group of which it is a member.)

(4) *Supplemental ownership change rules.* The determination whether the common parent (or loss subgroup parent) has an ownership change is made by applying paragraph (b)(1) of this section as modified by the following additional rules:

(i) *Additional testing dates for the common parent (or loss subgroup parent).* A testing date for the common parent (or loss subgroup parent) also includes—

(A) Each day on which there is an increase in the percentage ownership of stock of a subsidiary as described in paragraph (c)(2) of this section; and

(B) The first day of the first consolidated return year for which the group is a loss group (or the members compose a loss subgroup).

(ii) *Treatment of subsidiary stock as stock of the common parent (or loss subgroup parent).* The common parent (or loss subgroup parent) is treated as though it had issued to the person acquiring (or deemed to acquire) the subsidiary stock an amount of its own stock (by value) that equals the value of the subsidiary stock represented by the percentage increase in that person's ownership of the subsidiary (determined on a separate entity basis). Similar principles apply if the increase in percentage ownership interest is effected by a redemption or similar transaction.

(iii) *Different testing periods.* Stock treated as issued under paragraph (c)(4)(ii) of this section on a testing date is not treated as so issued for purposes of applying the ownership change rules of this paragraph (c) and paragraph (b)(1) of this section in a testing period that does not include that testing date.

(iv) *Disaffiliation of a subsidiary.* If a deemed issuance of stock under paragraph (c)(4)(ii) of this section would not cause the loss group (or loss subgroup) to have an ownership change before the day (if any) on which the subsidiary ceases to be a member of the loss group (or subgroup), then paragraph (c)(4) of this section shall not apply.

(v) *Subsidiary stock acquired first.* If an increase of subsidiary stock described in paragraph (c)(2)(i)(A) of this section occurs before the date that the 5-percent shareholder increases its percentage ownership interest in the stock of the common parent (or loss subgroup parent), then the deemed issuance of stock is treated as occurring on that later date, but in an amount equal to the value of the subsidiary stock on the date it was acquired.

(vi) *Anti-duplication rule.* If two or more 5-percent shareholders are treated as increasing their percentage ownership interests pursuant to the

same plan or arrangement described in paragraph (c)(3)(i) of this section, appropriate adjustments must be made so that the amount of stock treated as issued is not taken into account more than once.

(5) *Examples.* The following examples illustrate the principles of this paragraph (c):

Example 1. Stock of the common parent under supplemental rules. (i) A owns all the L stock. L is not a member of an affiliated group and has a net operating loss carryover arising in Year 1 that is carried over to Year 6. On September 20, Year 6, L transfers all of its assets and liabilities to a newly created subsidiary, S, in exchange for S stock. L and S thereafter file consolidated returns. On November 23, Year 6, B contributes cash to L in exchange for a 45 percent ownership interest in L and contributes cash to S for a 20 percent ownership interest in S.

(ii) During the 3 year period ending on November 23, Year 6, B is a 5% shareholder of L and of S that increases its ownership interest in L and S during that period. Under paragraph (c)(4)(ii) of this section, the determination whether L (the common parent of a loss group) has an ownership change on November 23, Year 6 (or, subject to paragraph (c)(4)(iv) of this section, on any testing date in the testing period which includes November 23, Year 6), is made by applying paragraph (b)(1)(i) of this section and by treating the value of B's 20 percent ownership interest in S as if it were L stock issued to B. Because B is a 5% shareholder of both L and S during the 3 year period ending on November 23, Year 6, and B's increase in its percentage ownership in the stock of S would be taken into account in determining if S (if it were a loss corporation) had an ownership change, it is not relevant whether L has actual knowledge of B's acquisition of S stock.

Example 2. Plan or arrangement—public offering of subsidiary stock. (i) A owns all the stock of L and L owns all the stock of L1. The L group has a consolidated net operating loss arising in Year 1 that resulted from the operations of L1 and that is carried over to Year 2. On October 7, Year 2, A sells 49 percent of the L stock to B. As part of a plan that includes the sale of L stock, A causes a public offering of L1 stock on November 6, Year 2. L has actual knowledge of the plan. The following is a graphic illustration of these facts:

BILLING CODE 4830–01–U

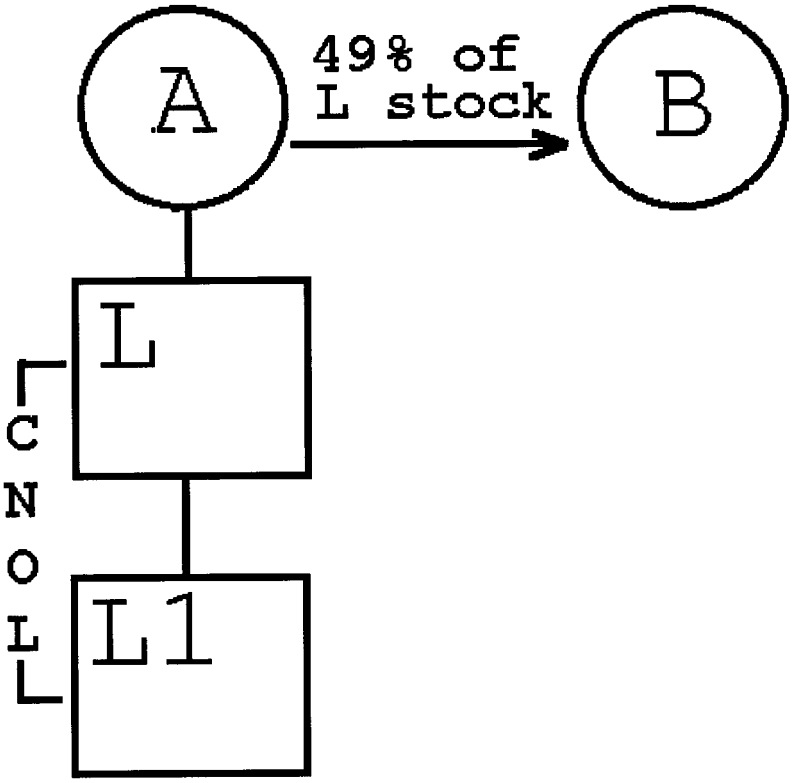

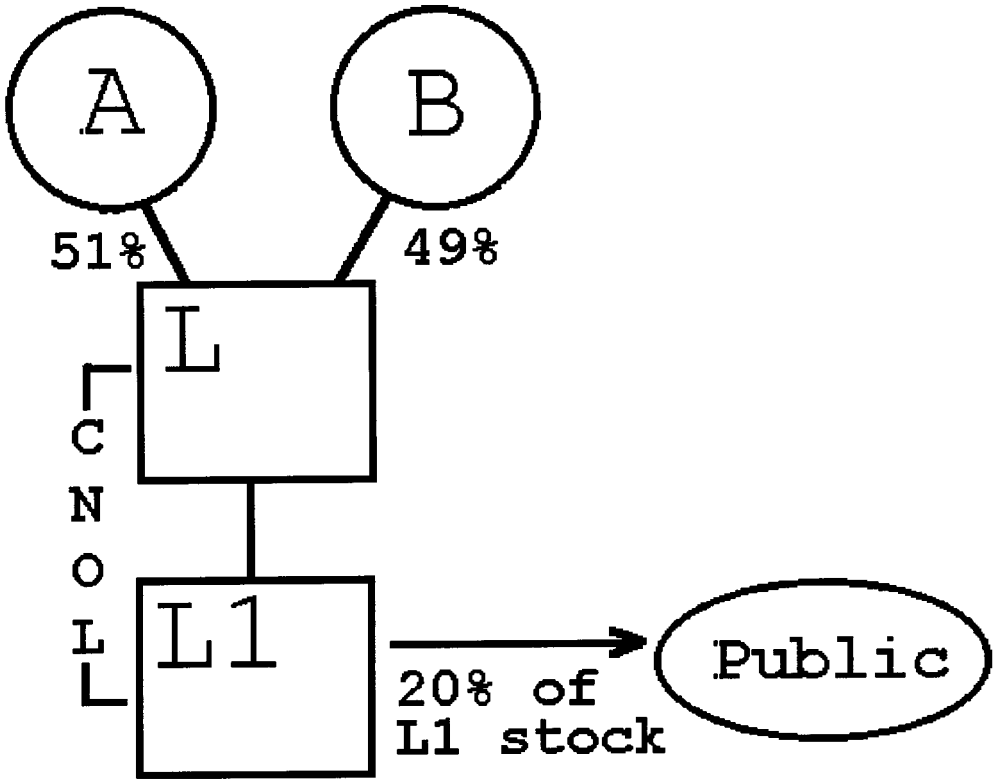

BILLING CODE 4830–01–C

(ii) A's sale of the L stock to B does not cause an ownership change of the L loss group on October 7, Year 2, under the rules of § 1.382–2T and paragraph (b)(1)(i) of this section.

(iii) Because the issuance of L1 stock to the public occurs as part of the same plan as B's acquisition of L stock, and L has knowledge of the plan, paragraph (c)(4) of this section applies to determine whether the L loss group has an ownership change on November 6, Year 2 (or, subject to paragraph (c)(4)(iv) of this section, on any testing date for which the testing period includes November 6, Year 2).

(d) *Testing period following ownership change under this section.* If a loss group (or a loss subgroup) has had an ownership change under this section, the testing period for determining a subsequent ownership change with respect to pre-change consolidated attributes (or pre-change subgroup attributes) begins no earlier than the first day following the loss group's (or loss subgroup's) most recent change date.

(e) *Information statements*—(1) *Common parent of a loss group.* The common parent of a loss group must file the information statement required by § 1.382–2T(a)(2)(ii) for a consolidated return year because of any owner shift, equity structure shift, or other transaction described in § 1.382–2T(a)(2)(i)—

(i) With respect to the common parent and with respect to any subsidiary stock subject to paragraph (c) of this section; and

(ii) With respect to an ownership change described in § 1.1502–96(b) (relating to ownership changes of subsidiaries).

(2) *Abbreviated statement with respect to loss subgroups.* The common parent of a consolidated group that has a loss subgroup during a consolidated return year must file the information statement required by § 1.382–2T(a)(2)(ii) because of any owner shift, equity structure shift, or other transaction described in § 1.382–2T(a)(2)(i) with respect to the loss subgroup parent and with respect to any subsidiary stock subject to paragraph (c) of this section. Instead of filing a separate statement for each loss subgroup parent, the common parent (which is treated as a loss corporation) may file the single statement described in paragraph (e)(1) of this section. In addition to the information concerning stock ownership of the common parent, the single statement must identify each loss subgroup parent and state which loss subgroups, if any, have had ownership changes during the consolidated return year. The loss subgroup parent is, however, still required to maintain the records necessary to determine if the loss subgroup has an ownership change. This paragraph (e)(2) applies with respect to the attributes of a loss subgroup until, under § 1.1502–96(a), the attributes are no longer treated as described in § 1.1502–91(d) (relating to the definition of loss subgroup). After that time, the information statement described in paragraph (e)(1) of this section must be filed with respect to those attributes.

§ 1.1502–93 Consolidated section 382 limitation (or subgroup section 382 limitation).

(a) *Determination of the consolidated section 382 limitation (or subgroup section 382 limitation)*—(1) *In general.* Following an ownership change, the consolidated section 382 limitation (or subgroup section 382 limitation) for any post-change year is an amount equal to the value of the loss group (or loss subgroup), as defined in paragraph (b) of this section, multiplied by the long-term tax-exempt rate that applies with respect to the ownership change, and adjusted as required by section 382 and the regulations thereunder. See, for example, section 382(b)(2) (relating to the carryforward of unused section 382 limitation), section 382(b)(3)(B) (relating to the section 382 limitation for the post-change year that includes the change date), section 382(h) (relating to recognized built-in gains and section 338 gains), and section 382(m)(2) (relating to short taxable years). For special rules relating to the recognized built-in gains of a loss group (or loss subgroup), see paragraph (c)(2) of this section.

(2) *Coordination with apportionment rule.* For special rules relating to apportionment of a consolidated section 382 limitation (or a subgroup section 382 limitation) or net unrealized built-in gain when one or more corporations cease to be members of a loss group (or a loss subgroup) and to aggregation of amounts so apportioned, see § 1.1502–95(c).

(b) *Value of the loss group (or loss subgroup)*—(1) *Stock value immediately before ownership change.* Subject to any adjustment under paragraph (b)(2) of this section, the value of the loss group (or loss subgroup) is the value, immediately before the ownership change, of the stock of each member, other than stock that is owned directly or indirectly by another member. For this purpose—

(i) Ownership is determined under § 1.382–2T;

(ii) A member is considered to indirectly own stock of another member through a nonmember only if the member has a 5-percent or greater ownership interest in the nonmember; and

(iii) Stock includes stock described in section 1504(a)(4) and § 1.382–2T(f)(18)(ii) and (iii).

(2) *Adjustment to value*—(i) *In general.* The value of the loss group (or loss subgroup), as determined under paragraph (b)(1) of this section, is adjusted under any rule in section 382 or the regulations thereunder requiring an adjustment to such value for purposes of computing the amount of the section 382 limitation. See, for example, section 382(e)(2) (redemptions and corporate contractions), section 382(l)(1) (certain capital contributions) and section 382(l)(4) (ownership of substantial nonbusiness assets). For purposes of section 382(e)(2), redemptions and corporate contractions that do not effect a transfer of value outside of the loss group (or loss subgroup) are disregarded. For purposes of section 382(l)(1), capital contributions between members of the loss group (or loss subgroup) (or a contribution of stock to a member made solely to satisfy the loss subgroup parent requirement of paragraph (d)(1)(ii) or (2)(ii) of this section), are not taken into account. Also, the substantial nonbusiness asset test of section 382(l)(4) is applied on a group (or subgroup) basis, and is not applied separately to its members.

(ii) *Anti-duplication.* Appropriate adjustments must be made to the extent necessary to prevent any duplication of the value of the stock of a member, even though corporations that do not file consolidated returns may not be required to make such an adjustment. In making these adjustments, the group (or loss subgroup) may apply the principles of § 1.382–8 (relating to controlled groups of corporations) in determining the value of a loss group (or loss subgroup) even if that section would not apply if separate returns were filed. Also, the principles of § 1.382–5(d) (relating to successive ownership changes and absorption of a section 382 limitation) may apply to adjust the consolidated section 382 limitation (or subgroup section 382 limitation) of a loss group (or loss subgroup) to avoid a duplication of value if there are simultaneous (rather than successive) ownership changes.

(3) *Examples.* The following examples illustrate the principles of this paragraph (b):

Example 1. Basic case. (i) L, L1, and L2 compose a loss group. L has outstanding common stock, the value of which is $100. L1 has outstanding common stock and

preferred stock that is described in section 1504(a)(4). L owns 90 percent of the L1 common stock, and A owns the remaining 10 percent of the L1 common stock plus all the preferred stock. The value of the L1 common stock is $40, and the value of the L1 preferred stock is $30. L2 has outstanding common stock, 50 percent of which is owned by L and 50 percent by L1. The L group has an ownership change. The following is a graphic illustration of these facts:

BILLING CODE 4830–01–U

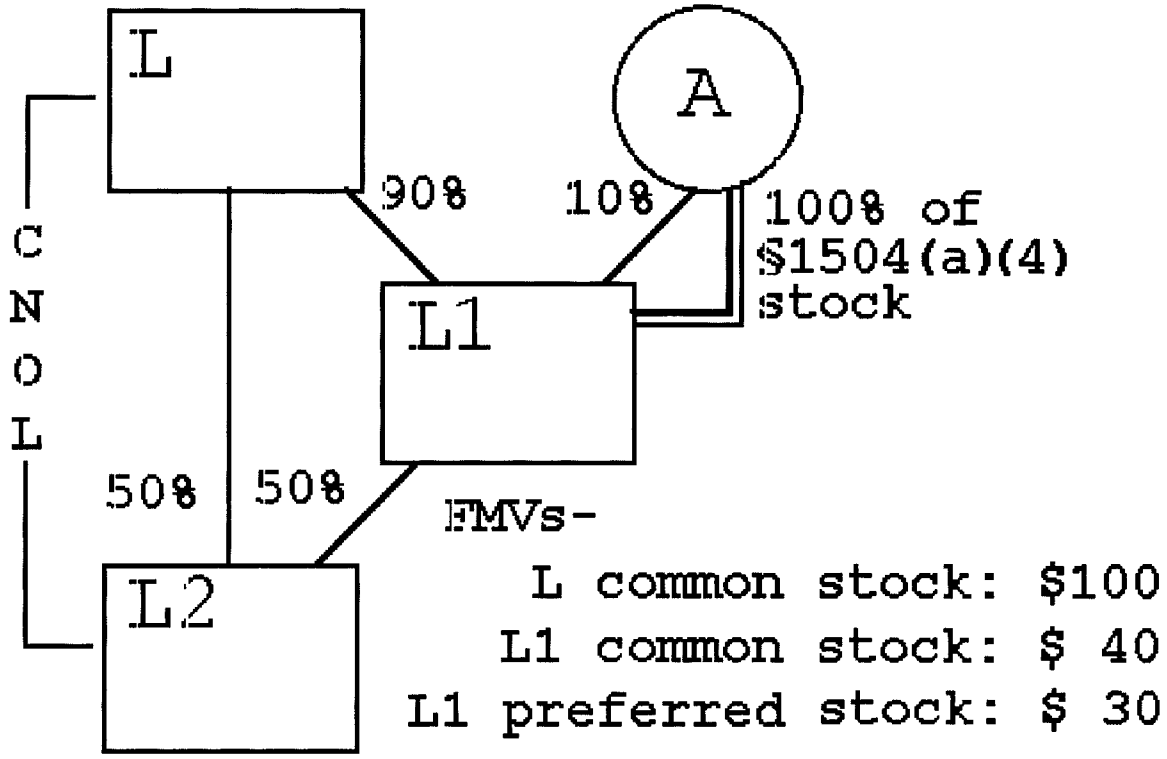

BILLING CODE 4830–01–C

(ii) Under paragraph (b)(1) of this section, the L group does not include the value of the stock of any member that is owned directly or indirectly by another member in computing its consolidated section 382 limitation. Accordingly, the value of the stock of the loss group is $134, the sum of the value of—

(a) The common stock of L ($100);

(b) The 10 percent of the L1 common stock ($4) owned by A; and

(c) The L1 preferred stock ($30) owned by A.

Example 2—Indirect ownership. (i) L and L1 compose a consolidated group. L's stock has a value of $100. L owns 80 shares (worth $80) and corporation M owns 20 shares (worth $20) of the L1 stock. L also owns 79 percent of the stock of corporation M. The L group has an ownership change. The following is a graphic illustration of these facts:

BILLING CODE 4830–01–U

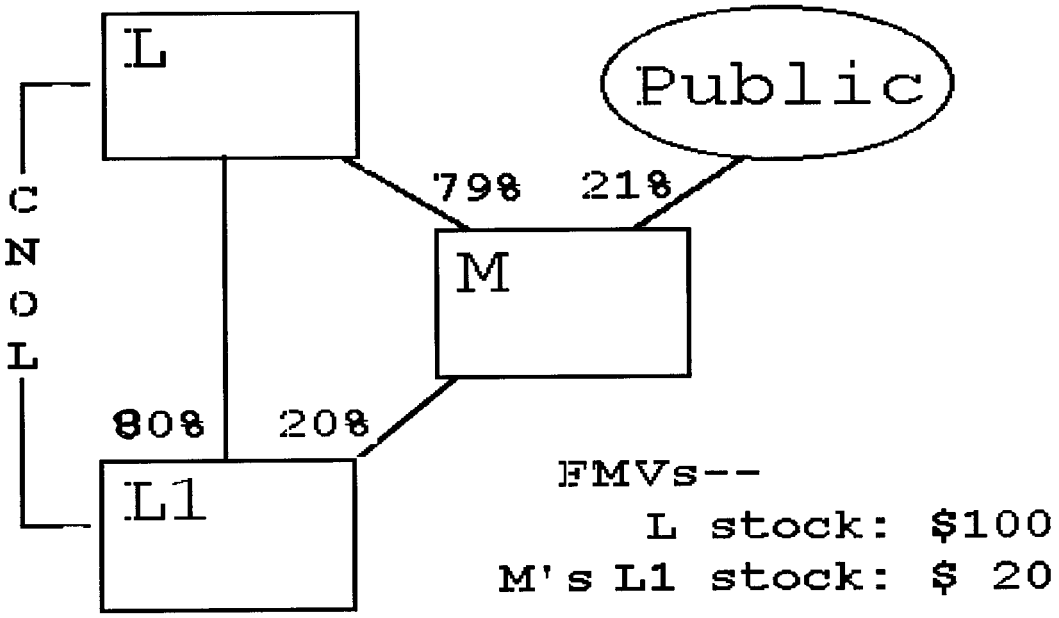

BILLING CODE 4830–01–C

(ii) Under paragraph (b)(1) of this section, because of L's more than 5 percent ownership interest in M, a nonmember, L is considered to indirectly own 15.8 shares of the L1 stock held by M (79% × 20 shares). The value of the L loss group is $104.20, the sum of the values of—

(a) The L stock ($100); and

(b) The L1 stock not owned directly or indirectly by L (21% × $20, or $4.20).

(c) *Recognized built-in gain of a loss group or loss subgroup*—(1) *In general.* If a loss group (or loss subgroup) has a net unrealized built-in gain, any recognized built-in gain of the loss group (or loss subgroup) is taken into account under section 382(h) in determining the consolidated section 382 limitation (or subgroup section 382 limitation).

(2) *Adjustments.* Appropriate adjustments must be made so that any recognized built-in gain of a member that increases more than one section 382 limitation (whether consolidated, subgroup, or separate) does not effect a duplication in the amount of consolidated taxable income that can be offset by pre-change net operating losses. For example, a consolidated section 382 limitation that is increased by recognized built-in gains is reduced to the extent that pre-change net operating losses of a loss subgroup absorb additional consolidated taxable income because the same recognized built-in gains caused an increase in that loss subgroup's section 382 limitation. In addition, recognized built-in gain may not increase the amount of consolidated taxable income that can be offset by recognized built-in losses.

(d) *Continuity of business*—(1) *In general.* A loss group (or a loss subgroup) is treated as a single entity for purposes of determining whether it satisfies the continuity of business enterprise requirement of section 382(c)(1).

(2) *Example.* The following example illustrates the principle of this paragraph (d):

Example. Continuity of business enterprise. L owns all the stock of two subsidiaries, L1 and L2. The L group has an ownership change. It has pre-change consolidated attributes attributable to L2. Each of the members has historically conducted a separate line of business. Each line of business is approximately equal in value. One year after the ownership change, L discontinues its separate business and the business of L2. The separate business of L1 is continued for the remainder of the 2 year period following the ownership change. The continuity of business enterprise requirement of section 382(c)(1) is met even though the separate businesses of L and L2 are discontinued.

(e) *Limitations of losses under other rules.* If a section 382 limitation for a post-change year exceeds the consolidated taxable income that may be offset by pre-change attributes for any reason, including the application of the limitation of § 1.1502–21(c), the amount of the excess is carried forward under section 382(b)(2) (relating to the carryforward of unused section 382 limitation).

§ 1.1502–94 Coordination with section 382 and the regulations thereunder when a corporation becomes a member of a consolidated group.

(a) *Scope*—(1) *In general.* This section applies section 382 and the regulations thereunder to a corporation that is a new loss member of a consolidated group. A corporation is a new loss member if it—

(i) Carries over a net operating loss that arose (or is treated under § 1.1502–21(c) as arising) in a SRLY with respect to the current group, and that is not described in § 1.1502–91(d)(1); or

(ii) Has a net unrealized built-in loss (determined under paragraph (c) of this section immediately before it becomes a member of the current group by treating that day as a change date) that is not taken into account under § 1.1502–91(d)(2) in determining whether two or more corporations compose a loss subgroup.

(2) *Successor corporation as new loss member.* A new loss member also includes any successor to a corporation that has a net operating loss carryover arising in a SRLY and that is treated as remaining in existence under § 1.382–2(a)(1)(ii) following a transaction described in section 381(a).

(3) *Coordination in the case of a loss subgroup.* For rules regarding the determination of whether there is an ownership change of a loss subgroup with respect to a net operating loss or a net unrealized built-in loss described in § 1.1502–91(d) (relating to the definition of loss subgroup) and the computation of a subgroup section 382 limitation following such an ownership change, see §§ 1.1502–92 and 1.1502–93.

(4) *End of separate tracking of certain losses.* If § 1.1502–96(a) (relating to the end of separate tracking of attributes) applies to a new loss member, then, while that member remains a member of

the consolidated group, there is an ownership change with respect to its attributes described in § 1.1502–96(a)(2) only if the consolidated group is a loss group and has an ownership change under § 1.1502–92(b)(1)(i) (or that member has an ownership change under § 1.1502–96(b) (relating to ownership changes of subsidiaries)). If, however, the new loss member has had an ownership change before § 1.1502–96(a) applies, see § 1.1502–96(c) for the continuing application of the section 382 limitation with respect to the member's pre-change losses.

(5) *Cross-reference.* See section 382(a) and § 1.1502–96(c) for the continuing effect of an ownership change after a corporation becomes or ceases to be a member.

(b) *Application of section 382 to a new loss member*—(1) *In general.* Section 382 and the regulations thereunder apply to a new loss member to determine, on a separate entity basis, whether and to what extent a section 382 limitation applies to limit the amount of consolidated taxable income that may be offset by the new loss member's pre-change separate attributes. For example, if an ownership change with respect to the new loss member occurs under section 382 and the regulations thereunder, the amount of consolidated taxable income for any post-change year that may be offset by the new loss member's pre-change separate attributes shall not exceed the section 382 limitation as determined separately under section 382(b) with respect to that member for such year. If the post-change year includes the change date, section 382(b)(3)(A) is applied so that the section 382 limitation of the new loss member does not apply to the portion of the taxable income for such year that is allocable to the period in such year on or before the change date. See generally § 1.382–6 (relating to the allocation of income and loss).

(2) *Adjustment to value.* Appropriate adjustments must be made to the extent necessary to prevent any duplication of the value of the stock of a member, even though corporations that do not file consolidated returns may not be required to make such an adjustment. For example, the principles of § 1.1502–93(b)(2)(ii) (relating to adjustments to value) apply in determining the value of a new loss member.

(3) *Pre-change separate attribute defined.* A pre-change separate attribute of a new loss member is—

(i) Any net operating loss carryover of the new loss member described in paragraph (a)(1) of this section; and

(ii) Any recognized built-in loss of the new loss member.

(4) *Examples.* The following examples illustrate the principles of this paragraph (b):

Example 1. Basic case. (i) A and P each own 50 percent of the L stock. On December 19, Year 6, P purchases 30 percent of the L stock from A for cash. L has net operating losses arising in Year 1 and Year 2 that it carries over to Year 6 and Year 7. The following is a graphic illustration of these facts:

BILLING CODE 4830–01–U

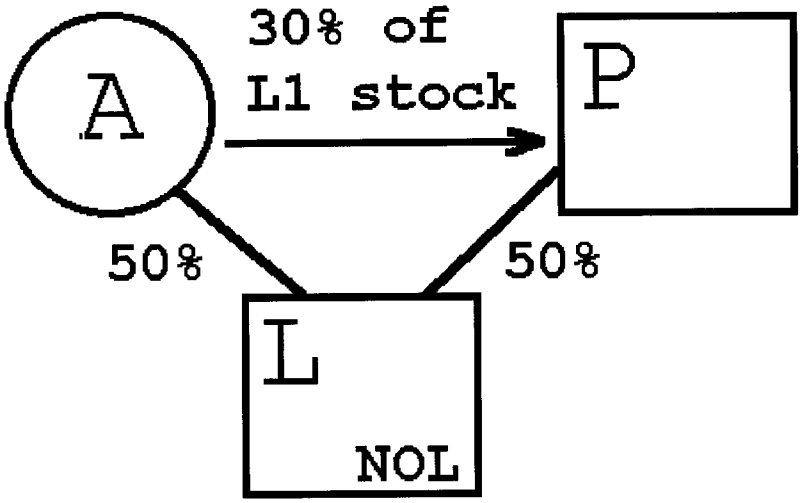

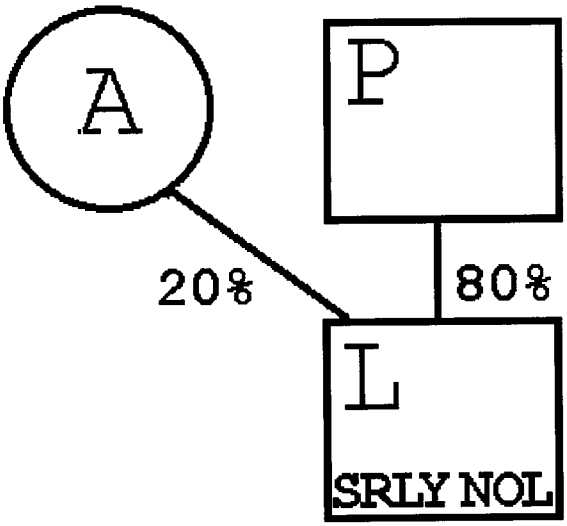

BILLING CODE 4830–01–C

(ii) L is a new loss member because it has net operating loss carryovers that arose in a SRLY with respect to the P group and L is not a member of a loss subgroup under § 1.1502–91(d). Under section 382 and the regulations thereunder, L is a loss corporation on December 19, Year 6, that day is a testing date for L, and the testing period for L commences on December 20, Year 3.

(iii) P's purchase of L stock does not cause an ownership change of L on December 19, Year 6, with respect to the net operating loss carryovers from Year 1 and Year 2 under section 382 and § 1.382–2T. The use of the loss carryovers, however, is subject to limitation under § 1.1502–21(c).

Example 2. Multiple new loss members. (i) The facts are the same as in *Example 1,* and, on December 31, Year 6, L purchases all the stock of L1 from B for cash. L1 has a net operating loss of $40 arising in Year 3 that it carries over to Year 7. The following is a graphic illustration of these facts:

BILLING CODE 4830–01–U

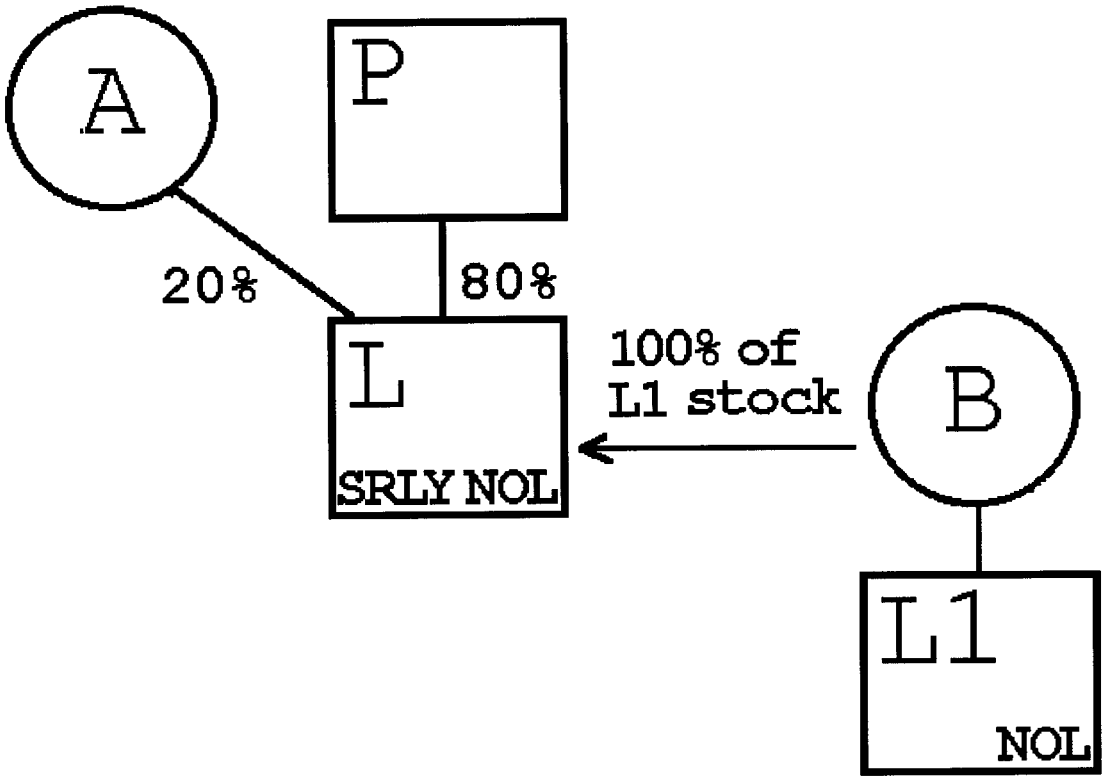

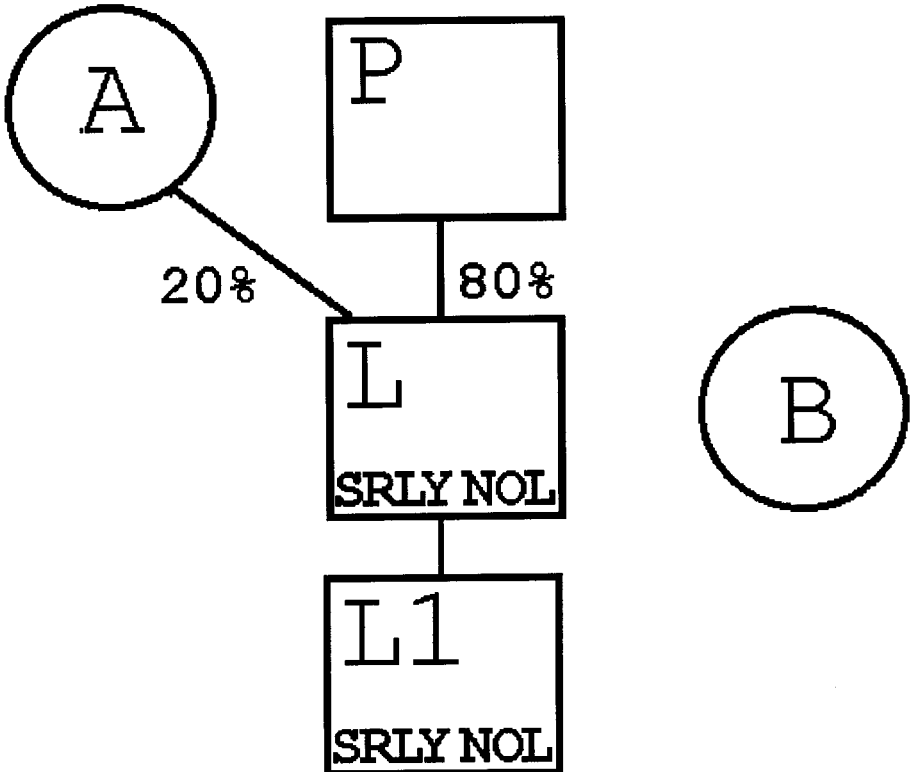

BILLING CODE 4830–01–C

(ii) L1 is a new loss member because it has a net operating loss carryover from Year 3 that arose in a SRLY with respect to the P group and L1 is not a member of a loss subgroup under § 1.1502–91(d)(1).

(iii) L's purchase of all the stock of L1 causes an ownership change of L1 on December 31, Year 6, under section 382 and § 1.382–2T. Accordingly, a section 382 limitation based on the value of the L1 stock immediately before the ownership change limits the amount of consolidated taxable income of the P group for any post-change year that may be offset by L1's loss from Year 3.

(iv) L1's ownership change upon becoming a member of the P group is an ownership change described in § 1.1502–96(a). Thus, starting on January 1, Year 7, the P group no longer separately tracks owner shifts of the stock of L1 with respect to L1's loss from Year 3, and the P group is a loss group because L1's Year 3 loss is treated as a loss described in § 1.1502–91(c).

Example 3. Ownership changes of new loss members. (i) The facts are the same as in Example 2, and, on July 30, Year 7, C purchases all the stock of P for cash.

(ii) L is a new loss member on July 30, Year 7, because its Year 1 and Year 2 losses arose in SRLYs with respect to the P group and it is not a member of a loss subgroup under § 1.1502–91(d)(1). The testing period for L commences on August 1, Year 4. C's purchase of all the P stock causes an ownership change of L on July 30, Year 7, under section 382 and § 1.382–2T with respect to its Year 1 and Year 2 losses. Accordingly, a section 382 limitation based on the value of the L stock immediately before the ownership change limits the amount of consolidated taxable income of the P group for any post-change year that may be offset by L's Year 1 and Year 2 losses. See § 1.1502–21(c) for rules relating to an additional limitation.

(iii) The P group is a loss group on July 30, Year 7, because it is entitled to use L1's loss from Year 3, and such loss is no longer treated as a loss of a new loss member starting the day after L1's ownership change on December 31, Year 6. See §§ 1.1502–96(a) and 1.1502–91(c)(2). C's purchase of all the P stock causes an ownership change of P, and therefore the P loss group, on July 30, Year 7, with respect to L1's Year 3 loss. Accordingly, a consolidated section 382 limitation based on the value of the P stock immediately before the ownership change limits the amount of consolidated taxable income of the P group for any post-change year that may be offset by L1's Year 3 loss.

(c) *Built-in gains and losses.* As the context may require, the principles of §§ 1.1502–91(g) and (h) and 1.1502–93(c) (relating to built-in gains and losses) apply to a new loss member on a separate entity basis. See § 1.1502–91(g)(4). See § 1.1502–13 (including *Example 10* of § 1.1502–13(c)(7)) for rules relating to the treatment of intercompany transactions.

(d) *Information statements.* The common parent of a consolidated group that has a new loss member subject to paragraph (b)(1) of this section during a consolidated return year must file the information statement required by § 1.382–2T(a)(2)(ii) because of any owner shift, equity structure shift, or other transaction described in § 1.382–2T(a)(2)(i). Instead of filing a separate statement for each new loss member, the common parent may file a single statement described in § 1.382–2T(a)(2)(ii) with respect to the stock ownership of the common parent (which is treated as a loss corporation). In addition to the information concerning stock ownership of the common parent, the single statement must identify each new loss member and state which new loss members, if any, have had ownership changes during the consolidated return year. The new loss member is, however, required to maintain the records necessary to determine if it has an ownership change. This paragraph (d) applies with respect to the attributes of a new loss member until an event occurs which ends separate tracking under § 1.1502–96(a). After that time, the information statement described in § 1.1502–92(e)(1) must be filed with respect to these attributes.

§ 1.1502–95 Rules on ceasing to be a member of a consolidated group (or loss subgroup).

(a) *In general*—(1) *Consolidated group.* This section provides rules for applying section 382 on or after the day that a member ceases to be a member of a consolidated group (or loss subgroup). The rules concern how to determine whether an ownership change occurs with respect to losses of the member, and how a consolidated section 382 limitation (or subgroup section 382 limitation) and a loss group's (or loss subgroup's) net unrealized built-in gain or loss is apportioned to the member. As the context requires, a reference in this section to a loss group, a member, or a corporation also includes a reference to a loss subgroup, and a reference to a consolidated section 382 limitation also includes a reference to a subgroup section 382 limitation.

(2) *Election by common parent.* Only the common parent (not the loss subgroup parent) may make the election under paragraph (c) of this section to apportion a consolidated section 382 limitation (or subgroup section 382 limitation) or a loss group's (or loss subgroup's) net unrealized built-in gain.

(3) *Coordination with §§ 1.1502–91 through 1.1502–93.* For rules regarding the determination of whether there is an ownership change of a loss subgroup and the computation of a subgroup section 382 limitation following such an ownership change, see §§ 1.1502–91 through 1.1502–93.

(b) *Separate application of section 382 when a member leaves a consolidated group*—(1) *In general.* Except as provided in §§ 1.1502–91 through 1.1502–93 (relating to rules applicable to loss groups and loss subgroups), section 382 and the regulations thereunder apply to a corporation on a separate entity basis after it ceases to be a member of a consolidated group (or loss subgroup). Solely for purposes of determining whether a corporation has an ownership change—

(i) Any portion of a consolidated net operating loss that is apportioned to the corporation under § 1.1502–21(b) is treated as a net operating loss of the corporation beginning on the first day of the taxable year in which the loss arose;

(ii) The testing period may include the period during which (or before which) the corporation was a member of the group (or loss subgroup); and

(iii) Except to the extent provided in § 1.1502–96(d) (relating to reattributed losses), the day it ceases to be a member of a consolidated group is treated as a testing date of the corporation within the meaning of § 1.382–2(a)(4).

(2) *Effect of a prior ownership change of the group.* If a loss group has had an ownership change under § 1.1502–92 before a corporation ceases to be a member of a consolidated group (the former member)—

(i) Any pre-change consolidated attribute that is subject to a consolidated section 382 limitation continues to be treated as a pre-change loss with respect to the former member after it is apportioned to the former member and, if any net unrealized built-in loss is allocated to the former member under paragraph (e) of this section, any recognized built-in loss of the former member is a pre-change loss of the member;

(ii) The section 382 limitation with respect to such pre-change attribute is zero unless the common parent, under paragraph (c) of this section, apportions to the former member all or part of the consolidated section 382 limitation applicable to such attribute. The limitation applicable to a pre-change attribute other than a recognized built-in loss may be increased to the extent that the common parent has apportioned all or part of the loss group's net unrealized built-in gain to the former member, and the former member recognizes built-in gain during the recognition period;

(iii) The testing period for determining a subsequent ownership

change with respect to such pre-change attribute (or such net unrealized built-in loss, if any) begins no earlier than the first day following the loss group's most recent change date; and

(iv) As generally provided under section 382, an ownership change of the former member that occurs on or after the day it ceases to be a member of a loss group may result in an additional, lesser limitation amount with respect to such losses.

(3) *Application in the case of a loss subgroup.* If two or more former members are included in the same loss subgroup immediately after they cease to be members of a consolidated group, the principles of paragraphs (b), (c) and (e) of this section apply to the loss subgroup. Therefore, for example, an apportionment by the common parent under paragraph (c) of this section is made to the loss subgroup rather than separately to its members. If the common parent of the consolidated group apportions all or part of a limitation (or net unrealized built-in gain) separately to one or more former members that are included in a loss subgroup because the common parent of the acquiring group makes an election under § 1.1502–91(d)(4) with respect to those members, the aggregate of those separate amounts is treated as the amount apportioned to the loss subgroup. Such separate apportionment may occur, for example, because the election under § 1.1502–91(d)(4) has not been filed at the time that the election of apportionment is made under paragraph (f) of this section.

(4) *Examples.* The following examples illustrate the principles of this paragraph (b):

Example 1. Treatment of departing member as a separate corporation throughout the testing period. (i) A owns all the L stock. L owns all the stock of L1 and L2. The L group has a consolidated net operating loss arising in Year 1 that is carried over to Year 3. On January 12, Year 2, A sells 30 percent of the L stock to B. On February 7, Year 3, L sells 40 percent of the L2 stock to C, and L2 ceases to be a member of the group. A portion of the Year 1 consolidated net operating loss is apportioned to L2 under § 1.1502–21(b) and is carried to L2's first separate return year, which ends December 31, Year 3. The following is a graphic illustration of these facts:

BILLING CODE 4830–01–U

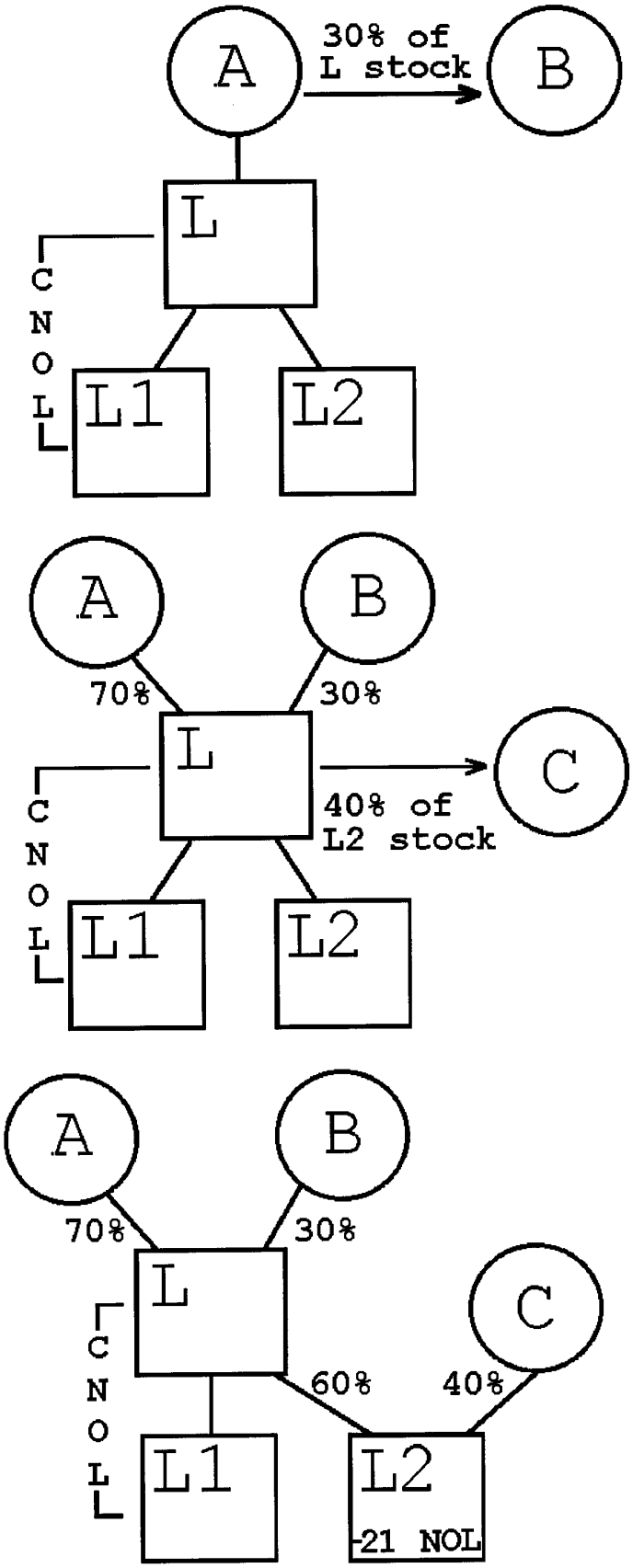

BILLING CODE 4830–01–C

(ii) Under paragraph (b)(1) of this section, L2 is a loss corporation on February 7, Year 3. Under paragraph (b)(1)(iii) of this section, February 7, Year 3, is a testing date. Under paragraph (b)(1)(ii) of this section, the testing period for L2 with respect to this testing date commences on January 1, Year 1, the first day of the taxable year in which the portion of the consolidated net operating loss apportioned to L2 arose. Therefore, in determining whether L2 has an ownership change on February 7, Year 3, B's purchase of 30 percent of the L stock and C's purchase of 40 percent of the L2 stock are each owner shifts. L2 has an ownership change under section 382(g) and § 1.382–2T because B and C have increased their ownership interests in L2 by 18 and 40 percentage points, respectively, during the testing period.

Example 2. Effect of prior ownership change of loss group. (i) L owns all the L1 stock and L1 owns all the L2 stock. The L loss group had an ownership change under § 1.1502–92 in Year 2 with respect to a consolidated net operating loss arising in Year 1 and carried over to Year 2 and Year 3. The consolidated section 382 limitation computed solely on the basis of the value of the stock of L is $100. On December 31, Year 2, L1 sells 25 percent of the stock of L2 to B. L2 is apportioned a portion of the Year 1 consolidated net operating loss which it carries over to its first separate return year ending after December 31, Year 2. L2's separate section 382 limitation with respect to this loss is zero unless L elects to apportion all or a part of the consolidated section 382 limitation to L2. (See paragraph (c) of this section for rules regarding the apportionment of a consolidated section 382 limitation.) L apportions $50 of the consolidated section 382 limitation to L2, and the remaining $50 of the consolidated section 382 limitation stays with the loss group composed of L and L1.

(ii) On December 31, Year 3, L1 sells its remaining 75 percent stock interest in L2 to C, resulting in an ownership change of L2. L2's section 382 limitation computed on the change date with respect to the value of its stock is $30. Accordingly, L2's section 382 limitation for post-change years ending after December 31, Year 3, with respect to its pre-change losses, including the consolidated net operating losses apportioned to it from the L group, is $30, adjusted for a short taxable year, carryforward of unused limitation, or any other adjustment required under section 382.

(c) *Apportionment of a consolidated section 382 limitation*—(1) *In general.* The common parent may elect to apportion all or any part of a consolidated section 382 limitation to a former member (or loss subgroup). The common parent also may elect to apportion all or any part of the loss group's net unrealized built-in gain to a former member (or loss subgroup).

(2) *Amount which may be apportioned—(i) Consolidated section 382 limitation.* The common parent may apportion all or part of each element of the consolidated section 382 limitation determined under § 1.1502–93. For this purpose, the consolidated section 382 limitation consists of two elements—

(A) The value element, which is the element of the limitation determined under section 382(b)(1) (relating to value multiplied by the long-term tax-exempt rate) without regard to such adjustments as those described in section 382(b)(2) (relating to the carryforward of unused section 382 limitation), section 382(b)(3)(B)(relating to the section 382 limitation for the post-change year that includes the change date), section 382(h)(relating to built-in gains and section 338 gains), and section 382(m)(2)(relating to short taxable years); and

(B) The adjustment element, which is so much (if any) of the limitation for the taxable year during which the former member ceases to be a member of the consolidated group that is attributable to a carryover of unused limitation under section 382(b)(2) or to recognized built-in gains under 382(h).

(ii) *Net unrealized built-in gain.* The aggregate amount of the loss group's net unrealized built-in gain that may be apportioned to one or more former members that cease to be members during the same consolidated return year cannot exceed the loss group's excess, immediately after the close of that year, of net unrealized built-in gain over recognized built-in gain, determined under section 382(h)(1)(A)(ii) (relating to a limitation on recognized built-in gain). For this purpose, net unrealized built-in gain apportioned to former members in prior consolidated return years is treated as recognized built-in gain in those years.

(3) Effect of apportionment on the consolidated group—(i) Consolidated section 382 limitation. The value element of the consolidated section 382 limitation for any post-change year ending after the day that a former member (or loss subgroup) ceases to be a member(s) is reduced to the extent that it is apportioned under this paragraph (c). The consolidated section 382 limitation for the post-change year in which the former member (or loss subgroup) ceases to be a member(s) is also reduced to the extent that the adjustment element for that year is apportioned under this paragraph (c).

(ii) *Net unrealized built-in gain.* The amount of the loss group's net unrealized built-in gain that is apportioned to the former member (or loss subgroup) is treated as recognized built-in gain for a prior taxable year ending in the recognition period for purposes of applying the limitation of section 382(h)(1)(A)(ii) to the loss group's recognition period taxable years beginning after the consolidated return year in which the former member (or loss subgroup) ceases to be a member.

(4) *Effect on corporations to which an apportionment is made*—(i) *Consolidated section 382 limitation.* The amount of the value element that is apportioned to a former member (or loss subgroup) is treated as the amount determined under section 382(b)(1) for purposes of determining the amount of that corporation's (or loss subgroup's) section 382 limitation for any taxable year ending after the former member (or loss subgroup) ceases to be a member(s). Appropriate adjustments must be made to the limitation based on the value element so apportioned for a short taxable year, carryforward of unused limitation, or any other adjustment required under section 382. The adjustment element apportioned to a former member (or loss subgroup) is treated as an adjustment under section 382(b)(2) or section 382(h), as appropriate, for the first taxable year after the member (or members) ceases to be a member (or members).

(ii) *Net unrealized built-in gain.* For purposes of determining the amount by which the former member's (or loss subgroup's) section 382 limitation for any taxable year beginning after the former member (or loss subgroup) ceases to be a member(s) is increased by its recognized built-in gain—

(A) The amount of net unrealized built-in gain apportioned to a former member (or loss subgroup) is treated as if it were an amount of net unrealized built-in gain determined under section 382(h)(1)(A)(i)(without regard to the threshold of section 382(h)(3)(B)) with respect to such member or loss subgroup, and that amount is not reduced under section 382(h)(1)(A)(ii) by the loss group's recognized built-in gain;

(B) The former member's (or loss subgroup's) 5 year recognition period begins on the loss group's change date;

(C) In applying section 382(h)(1)(A)(ii), the former member (or loss subgroup) takes into account only its prior taxable years that begin after it ceases to be a member of the loss group; and

(D) The former member's (or loss subgroup's) recognized built-in gain on the disposition of an asset is determined under section 382(h)(2)(A), treating references to the change date in that section as references to the loss group's change date.

(5) *Deemed apportionment when loss group terminates.* If a loss group terminates, to the extent the consolidated section 382 limitation or net unrealized built-in gain is not

apportioned under paragraph (c)(1) of this section, the consolidated section 382 limitation or net unrealized built-in gain is deemed to be apportioned to the loss subgroup that includes the common parent, or, if there is no loss subgroup that includes the common parent immediately after the loss group terminates, to the common parent. A loss group terminates on the first day of the first taxable year that is a separate return year with respect to each member of the former loss group.

(6) *Appropriate adjustments when former member leaves during the year.* Appropriate adjustments are made to the consolidated section 382 limitation for the consolidated return year during which the former member (or loss subgroup) ceases to be a member(s) to reflect the inclusion of the former member in the loss group for a portion of that year.

(7) *Examples.* The following examples illustrate the principles of this paragraph (c):

Example 1. Consequence of apportionment. (i) L owns all the L1 stock and L1 owns all the L2 stock. The L group has a $200 consolidated net operating loss arising in Year 1 that is carried over to Year 2. At the close of December 31, Year 1, the group has an ownership change under § 1.1502–92. The ownership change results in a consolidated section 382 limitation of $10 based on the value of the stock of the group. On August 29, Year 2, L1 sells 30 percent of the stock of L2 to A. L2 is apportioned $90 of the group's $200 consolidated net operating loss under § 1.1502–21(b). L, the common parent, elects to apportion $6 of the consolidated section 382 limitation to L2. The following is a graphic illustration of these facts:

BILLING CODE 4830–01–U

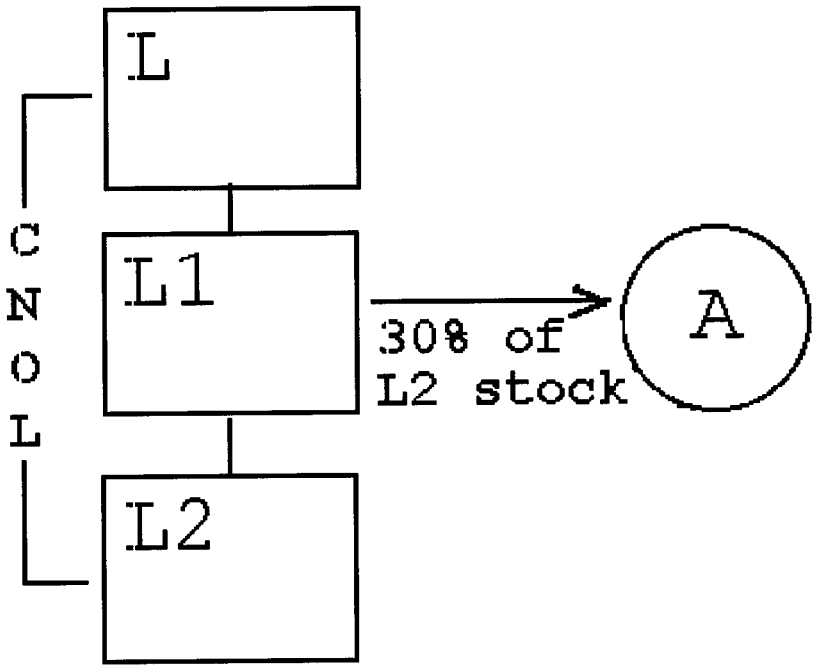

BILLING CODE 4830–01–C

(ii) For its separate return years ending after December 31, Year 2, L2's section 382 limitation with respect to the $90 of the group's net operating loss apportioned to it is $6, adjusted, as appropriate, for any short taxable year, unused section 382 limitation, or other adjustment. For its consolidated return year ending December 31, Year 2 the L group's consolidated section 382 limitation with respect to the remaining $110 of pre-change consolidated attribute is $4 ($10 minus the $6 value element apportioned to L2), adjusted, as appropriate, for any short taxable year, unused section 382 limitation, or other adjustment.

(iii) For the L group's consolidated return year ending December 31, Year 2, the value element of its consolidated section 382 limitation is increased by $4 (rounded to the nearest dollar), to account for the period during which L2 was a member of the L group ($6, the consolidated section 382 limitation apportioned to L2, times 241/365, the ratio of the number of days during Year 2 that L2 is a member of the group to the number of days in the group's consolidated return year). See paragraph (c)(6) of this section. Therefore, the value element of the consolidated section 382 limitation for Year 2 of the L group is $8 (rounded to the nearest dollar).

(iv) The section 382 limitation for L2's short taxable year ending December 31, Year 2, is $2 (rounded to the nearest dollar), which is the amount that bears the same relationship to $6, the value element of the consolidated section 382 limitation apportioned to L2, as the number of days during that short taxable year, 124 days, bears to 365. See § 1.382–5(c).

Example 2. Consequence of no apportionment. The facts are the same as in *Example 1,* except that L does not elect to apportion any portion of the consolidated section 382 limitation to L2. For its separate return years ending after August 29, Year 2, L2's section 382 limitation with respect to the $90 of the group's pre-change consolidated attribute apportioned to L2 is zero under paragraph (b)(2)(ii) of this section. Thus, the $90 consolidated net operating loss apportioned to L2 cannot offset L2's taxable income in any of its separate return years ending after August 29, Year 2. For its consolidated return years ending after August 29, Year 2, the L group's consolidated section 382 limitation with respect to the remaining $110 of pre-change consolidated attribute is $10, adjusted, as appropriate, for any short taxable year, unused section 382 limitation, or other adjustment.

Example 3. Apportionment of adjustment element. The facts are the same as in *Example 1,* except that L2 ceases to be a member of the L group on August 29, Year 3, and the L group has a $4 carryforward of an unused consolidated section 382 limitation (under section 382(b)(2)) to the Year 3 consolidated return year. The carryover of unused limitation increases the consolidated section 382 limitation for the Year 3 consolidated return year from $10 to $14. L may elect to apportion all or any portion of the $10 value element and all or any portion of the $4 adjustment element to L2.

(d) *Rules pertaining to ceasing to be a member of a loss subgroup*—(1) *In general.* A corporation ceases to be a member of a loss subgroup on the earlier of—

(i) The first day of the first taxable year for which it files a separate return; or

(ii) The first day that it ceases to bear a relationship described in section 1504(a)(1) to the loss subgroup parent (treating for this purpose the loss subgroup parent as the common parent described in section 1504(a)(1)(A)).

(2) *Exceptions.* Paragraph (d)(1)(ii) of this section does not apply to a member of a loss subgroup while that member remains a member of the current group—

(i) If an election under § 1.1502–91(d)(4)(relating to treating the subgroup parent requirement as satisfied) applies to the members of the loss subgroup;

(ii) Starting on the day after the change date (but not earlier than the date the loss subgroup becomes a member of the group), if there is an ownership change of the loss subgroup within six months before, on, or after becoming members of the group; or

(iii) Starting the day after the period of 5 consecutive years following the day that the loss subgroup become members of the group during which the loss subgroup has not had an ownership change.

(3) *Examples.* The principles of this paragraph (d) are illustrated by the following examples:

Example 1. Basic case. (i) P owns all the L stock, L owns all the L1 stock and L1 owns all the L2 stock. The P group has a consolidated net operating loss arising in Year 1 that is carried over to Year 2. On December 11, Year 2, P sells all the stock of L to corporation M. Each of L, L1, and L2 is apportioned a portion of the Year 1 consolidated net operating loss, and thereafter each joins with M in filing consolidated returns. Under § 1.1502–92, the L loss subgroup has an ownership change on December 11, Year 2. The L loss subgroup has a subgroup section 382 limitation of $100. The following is a graphic illustration of these facts:

BILLING CODE 4830–01–U

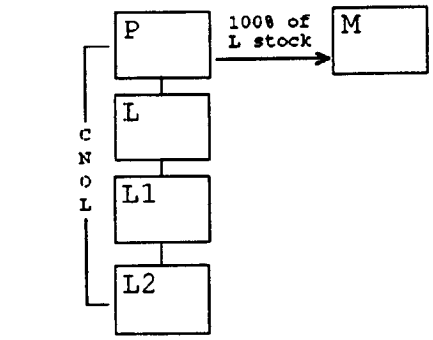

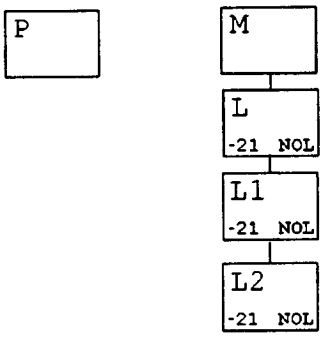

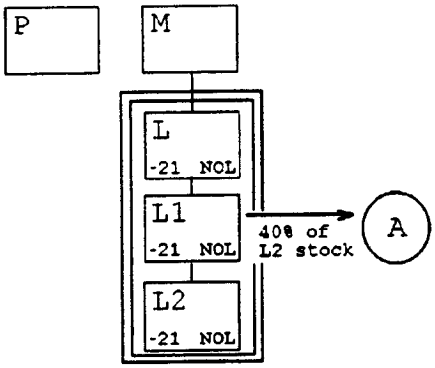

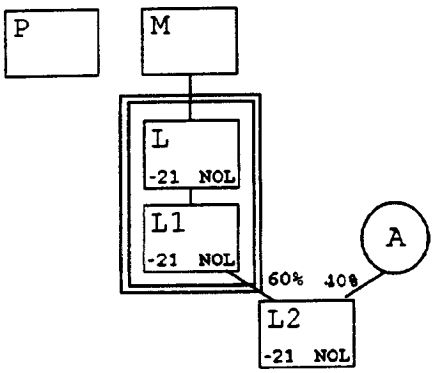

BILLING CODE 4830–01–C

(ii) On May 22, Year 3, L1 sells 40 percent of the L2 stock to A. L2 carries over a portion of the P group's net operating loss from Year 1 to its separate return year ending December 31, Year 3. Under paragraph (d)(1) of this section, L2 ceases to be a member of the L loss subgroup on May 22, Year 3, which is both (1) the first day of the first taxable year for which it files a separate return and (2) the day it ceases to bear a relationship described in section 1504(a)(1) to the loss subgroup parent, L. The net operating loss of L2 that is carried over from the P group is treated as a pre-change loss of L2 for its separate return years ending after May 22, Year 3. Under paragraphs (a)(2) and (b)(2) of this section, the separate section 382 limitation with respect to this loss is zero unless M elects to apportion all or a part of the subgroup section 382 limitation of the L loss subgroup to L2.

Example 2. Formation of a new loss subgroup. The facts are the same as in *Example 1,* except that A purchases 40 percent of the L1 stock from L rather than purchasing L2 stock from L1. L1 and L2 file a consolidated return for their first taxable year ending after May 22, Year 3, and each of L1 and L2 carries over a part of the net operating loss of the P group that arose in Year 1. Under paragraph (d)(1) of this section, L1 and L2 cease to be members of the L loss subgroup on May 22, Year 3. The net operating losses carried over from the P group are treated as pre-change subgroup attributes of the loss subgroup composed of L1 and L2. The subgroup section 382 limitation with respect to those losses is zero unless M elects to apportion all or part of the subgroup section 382 limitation of the L loss subgroup to the L1 loss subgroup. The following is a graphic illustration of these facts:

BILLING CODE 4830–01–U

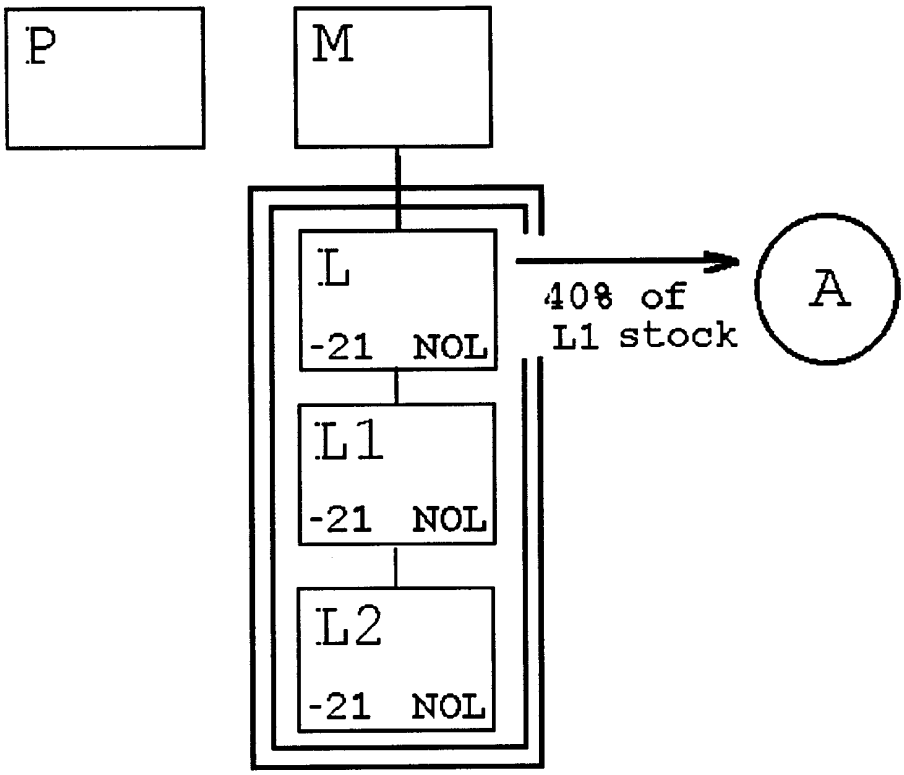

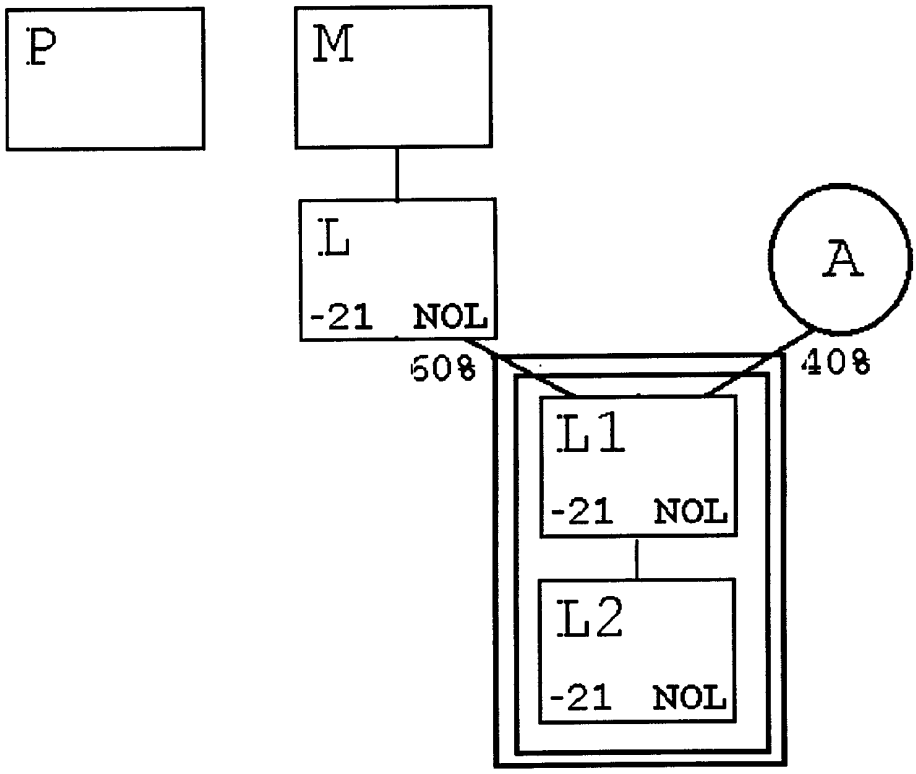

BILLING CODE 4830–01–C

Example 3. Ownership change upon becoming members of the group. (i) A owns all the stock of P, and P owns all the stock of L1 and L2. The P group has a consolidated net operating loss arising in Year 1 that is carried over to Year 3 and Year 4. Corporation M acquires all the stock of P on November 11, Year 3, and P, L1, and L2 thereafter file consolidated returns with M. M's acquisition results in an ownership change of the P loss subgroup under § 1.1502–92(b)(1)(ii).

(ii) P distributes the L2 stock to M on October 7, Year 4, and L2 ceases to bear the relationship described in section 1504(a)(1) to P, the P loss subgroup parent. However, under paragraph (d)(2) of this section, L2 does not cease to be a member of the P loss subgroup because the P loss subgroup had an ownership change upon becoming members of the M group and L2 remains in the M group.

Example 4. Ceasing to bear a section 1504 (a)(1) to the loss subgroup parent. (i) A owns all the stock of P, and P owns all the stock of L1 and L2. The P group has a consolidated net operating loss arising in Year 1 that is carried over to Year 7. At the close of Year 2, X acquires all of the stock of P, causing an ownership change of the loss subgroup composed of P, L1 and L2 under § 1.1502–92(b)(1)(ii). In Year 4, M, which is owned by the same person that owns X, acquires all of the stock of P, and the M acquisition does not cause a second ownership change of the P loss subgroup.

(ii) P distributes the L2 stock to M on February 3, Year 6 (less than 5 years after the P loss subgroup became members of the M group) and L2 ceases to bear the relationship described in section 1504(a)(1) to P, the loss subgroup parent. Thus, the section 382 limitation from the Year 2 ownership change that applies with respect to the pre-change attributes attributable to L2 is zero except to the extent M elects to apportion all or part of the P loss subgroup section 382 limitation to L2.

Example 5. Relationship through a successor. The facts are the same as in *Example 3,* except that M's acquisition of the P stock does not result in an ownership change of the P loss subgroup, and, instead of P's distributing the stock of L2, L2 merges into L1 on October 7, Year 4. L1 (as successor to L2 in the merger within the meaning of § 1.1502–1(f)(4)) continues to bear a relationship described in section 1504(a)(1) to P, the loss subgroup parent. Thus, L2 does not cease to be a member of the P loss subgroup as a result of the merger.

Example 6. Reattribution of net operating loss carryover under § 1.1502–20(g). The facts are the same as in *Example 3,* except that, instead of distributing the L2 stock to M, P sells that stock to B, and, under § 1.1502–20(g), M reattributes $10 of L2's net operating loss carryover to itself. Under § 1.1502–20(g), M succeeds to the reattributed loss as if the loss were succeeded to in a transaction described in section 381(a). M, as successor to L2, does not cease to be a member of the P loss subgroup.

(e) *Allocation of net unrealized built-in loss*—(1) *In general.* This paragraph (e) provides rules for the allocation of a loss group's (or loss subgroup's) net unrealized built-in loss if a member ceases to be a member of a loss group (or loss subgroup). This paragraph (e) applies if—

(i) A loss group (or loss subgroup) has a net unrealized built-in loss on a change date; and

(ii) Immediately after the close of the consolidated return year in which the departing member ceases to be a member, the amount of the loss group's (or loss subgroup's) excess of net unrealized built-in loss over recognized built-in loss, determined under section 382(h)(1)(B)(ii) (relating to a limitation on recognized built-in loss), is greater than zero. (The amount of such excess is referred to as the remaining NUBIL balance.) In applying section 382(h)(1)(B)(ii) for this purpose, net unrealized built-in loss allocated to departing members in prior consolidated return years is treated as recognized built-in loss in those years.

(2) *Amount of allocation*—(i) *In general.* The amount of net unrealized built-in loss allocated to a departing member is equal to the remaining NUBIL balance, multiplied by a fraction. The numerator of the fraction is the amount of the built-in loss, taken into account on the change date under § 1.1502–91(g), in the assets held by the departing member immediately after the member ceases to be a member of the loss group (or loss subgroup). The denominator of the fraction is the sum of the numerator, plus the amount of the built-in loss, taken into account under § 1.1502–91(g) on the change date, in the assets held by the loss group (or loss subgroup) immediately after the close of the taxable year in which the departing member ceases to be a member. (Fluctuations in value of the assets between the change date and the date that the member ceases to be a member of the group (or loss subgroup), or the close of the taxable year in which the member ceases to be a member of the loss group, are disregarded.) Because the amount of built-in loss on the change date with respect to a departing member's assets is taken into account (rather than that member's separately computed net unrealized built-in loss on the change date), a departing member can be apportioned all or part of the loss group's net unrealized built-in loss, even if the departing member had a separately computed net unrealized built-in gain on the change date. Amounts taken into account under section 382(h)(6)(C) (relating to certain deduction items) are treated as if they were assets in determining the numerator and denominator of the fraction.

(ii) *Transferred basis property and deferred gain or loss.* For purposes of paragraph (b)(2)(i) of this section, assets held by the departing member immediately after it ceases to be a member of the group (or by other members immediately after the close of the taxable year) include—

(A) Assets held at that time that are transferred basis property that was held by any member of the group (or loss subgroup) on the change date; and

(B) Assets held at that time by any member of the consolidated group with respect to which gain or loss of the group member or loss subgroup member at issue has been deferred in an intercompany transaction and has not been taken into account.

(iii) *Assets for which gain or loss has been recognized.* For purposes of paragraph (b)(2)(i) of this section, assets held by the departing member immediately after it ceases to be a member of the group (or by other members immediately after the close of the taxable year) do not include assets with respect to which gain or loss has previously been recognized and taken into account during the recognition period (including gain or loss recognized in an intercompany transaction and taken into account immediately before the member leaves the group). Appropriate adjustments must be made if gain or loss on an asset has been only partially recognized and taken into account.

(iv) *Exchanged basis property.* The rules of § 1.1502–91(h) apply for purposes of this paragraph (e) (disregarding stock received from the departing member or another member that is a member immediately after the close of the taxable year).

(v) *Two or more members depart during the same year.* If two or more members cease to be members during the same consolidated return year, appropriate adjustments must be made to the denominator of the fraction for each departing member by treating the other departing members as if they had not ceased to be members during that year and as if the assets held by those other departing members immediately after they cease to be members of the group (or loss subgroup) are assets held by the group immediately after the close of the taxable year.

(vi) *Anti-abuse rule.* If assets are transferred between members or a member ceases to be a member with a principal purpose of causing or affecting the allocation of amounts under this paragraph (e), appropriate adjustments must be made to eliminate any benefit of such acquisition, disposition, or allocation.

(3) *Effect of allocation on the consolidated group.* The amount of the net unrealized built-in loss that is allocated to the former member is treated as recognized built-in loss for a prior taxable year ending in the recognition period for purposes applying the limitation of section 382(h)(1)(B)(ii) to a loss group's (or loss subgroup's) recognition period taxable years beginning after the consolidated return year in which the former member ceases to be a member.

(4) *Effect on corporations to which the allocation is made.* For purposes of determining the amount of the former member's recognized built-in losses in any taxable year beginning after the former member ceases to be a member—

(i) The amount of the loss group's (or loss subgroup's) net unrealized built-in loss that is allocated to the former member is treated as if it were an amount of net unrealized built-in loss determined under section 382(h)(1)(B)(i)(without regard to the threshold of section 382(h)(3)(B)) with respect to such member or loss subgroup, and that amount is not reduced under section 382(h)(1)(B)(ii) by the loss group's (or loss subgroup's) recognized built-in losses;

(ii) The former member's 5 year recognition period begins on the loss group's (or loss subgroup's) change date;

(iii) In applying section 382(h)(1)(B)(ii), the former member takes into account only its prior taxable years that begin after it ceases to be a member of the loss group (or loss subgroup); and

(iv) The former member's recognized built-in loss on the disposition of an asset is determined under section 382(h)(2)(B), treating references to the change date in that section as references to the loss group's (or loss subgroup's) change date.

(5) *Subgroup principles.* If two or more former members are members of the same consolidated group (the second group) immediately after they cease to be members of the current group, the principles of paragraphs (e)(1), (2) and (4) of this section apply to those former members on an aggregate basis. Thus, for example, the amount of net unrealized built-in loss allocated to those members is based on the assets held by those members immediately after they cease to be members of the current group and the limitation of section 382(h)(1)(B)(ii) on recognized built-in losses is applied by taking into account the aggregate amount of net unrealized built-in loss allocated to the former members and the aggregate recognized losses of those members in taxable years beginning after they cease to be members of the current group. If one or more of such members cease to be members of the second group, the principles of this paragraph (e) are applied with respect to those members to allocate to them all or part of any remaining unrecognized amount of net unrealized built-in loss allocated to the members that became members of the second group.

(6) *Apportionment of consolidated section 382 limitation (or subgroup section 382 limitation)*—(i) *In general.* For rules relating to the apportionment of a consolidated section 382 limitation (or subgroup section 382 limitation) to a former member, see paragraph (c) of this section.

(ii) *Special rule for former members that become members of the same consolidated group.* If recognized built-in losses of one or more former members would be subject to a consolidated section 382 limitation (or subgroup section 382 limitation) if recognized immediately before the member (or members) cease to be members of the group, an apportionment of that limitation may be made, under paragraph (c) of this section, to a loss subgroup that includes such member (or members), and the recognized built-in losses (if any) of that member (or members) will be subject to that apportioned limitation. If two or more of such former members are not included in a loss subgroup immediately after they cease to be members of the group (for example, because they do not have net operating loss carryovers or, in the aggregate, a net unrealized built-in loss), but are members of the same consolidated group, an apportionment of the consolidated section 382 limitation (or subgroup section 382 limitation) may be made to them as if they were a loss subgroup.

(7) *Examples.* The following examples illustrate the principles of this paragraph (e):

Example 1. Basic allocation case. (i) P owns all of the stock of L1 and L2. On September 4, Year 1, A purchases all of the P stock, causing an ownership change of the P group. On that date P has two assets (other than the L1 and L2 stock), asset 1 with an adjusted basis of $40 and a fair market value of $15 and asset 2 with an adjusted basis of $50 and a fair market value of $100. L1 has two assets, asset 3 , with a fair market value of $50 and an adjusted basis of $100, and asset 4, with an adjusted basis of $125 and a fair market value of $75. L2 has two assets, asset 5, with a fair market value of $150 and an adjusted basis of $100, and asset 6, with an adjusted basis of $90 and a fair market value of $40. Thus, the P loss group has a net unrealized built-in loss of $75.

(ii) On March 19, Year 3, P sells all of the L2 stock to M. At that time, asset 5, which has appreciated in value, has a fair market value of $250 and an adjusted basis of $100. Asset 6, which has declined in value, has an adjusted basis of $90 and a fair market value of $10.

(iii) On April 8, Year 3, P sells asset 1, and has a recognized built-in loss of $25 that is subject to the P group's section 382 limitation. On November 11, Year 4, L2 sells asset 6 for its then fair market value, $10, recognizing a loss of $80. On June 3, Year 5, L1 sells asset 4, recognizing a loss of $50.

(iv) Immediately after the close of Year 3, the P loss group's remaining NUBIL balance is $50 ($75 net unrealized built-in loss reduced by the $25 recognized built-in loss of P). The portion of the remaining NUBIL balance that is allocated to L2 is $17 (rounded to the nearest dollar). Seventeen dollars is the product obtained by multiplying $50 (the remaining NUBIL balance) by $50/$150. The numerator of the fraction ($50) is the amount of built-in loss in asset 6, taken into account on the change date under § 1.1502–91(g). The denominator ($150) is the sum of the numerator ($50) and the amount of built-in loss in assets 3 and 4, taken into account on the change date under § 1.1502–91(g) ($100). The built-in loss in asset 1 is not included in the denominator of the fraction because it is not held by the P group immediately after the close of Year 3.

(v) Seventeen dollars of L2's $80 loss on the sale of asset 6 is a recognized built-in loss and subject to a section 382 limitation of zero, unless P apportions some or all of the P group's consolidated section 382 limitation to L2 (adjusted for a short taxable year, carryover of unused limitation, or any other adjustment required under section 382).

(vi) Thirty-three dollars of L1's $50 loss on the sale of asset 4 is subject to the P group's consolidated section 382 limitation, reduced by the amount of such limitation apportioned to L2, and adjusted for any short taxable year, a carryforward of unused limitation, or other adjustment. (In applying section 382(h)(1)(B)(ii) with respect to Year 5, the P group's net unrealized built-in loss is reduced by P's $25 recognized built-in loss in Year 3 and the $17 of net unrealized built-in loss allocated to L2, thus limiting the P group's recognized built-in loss in Year 5 to $33.)

Example 2. Two members depart in the same year. The facts are the same as in *Example 1,* except that P sells all of the stock of L1 to C on November 1, Year 3. The amount of net unrealized built-in loss apportioned to L2 (rounded to the nearest dollar) is $17 ($50 remaining NUBIL balance × $50/$150). The amount of net unrealized built-in loss apportioned to L1 (rounded to the nearest dollar) is $33 ($50 remaining NUBIL balance × $100/$150).

(8) *Reporting requirement.* If a net unrealized built-in loss is allocated under this paragraph (e), the common parent must file a statement with its income tax return for the taxable year in which the former member(s) (or a new loss subgroup that includes that member) ceases to be a member. The statement must provide the name and employer identification number (E.I.N.)

of the departing member, the amount of remaining NUBIL balance for the taxable year in which the member departs, and the amount of the net unrealized built-in loss allocated to the departing member. The common parent must also deliver a copy of the statement to the former member on or before the day the group files its income tax return for the consolidated return year that the former member ceases to be a member. A copy of the statement must be attached to the first income tax return of the former member (or the first return in which the former member joins) that is filed after the close of the consolidated return year of the group of which the former member (or a new loss subgroup that includes that member) cease to be a member. This paragraph (e)(8) does not apply if the required information (other than the amount of remaining NUBIL balance) is included in a statement of election under paragraph (f) of this section (relating to apportioning a section 382 limitation).

(f) *Filing the election to apportion the section 382 limitation and net unrealized built-in gain*—(1) *Form of the election to apportion.* An election under paragraph (c) of this section must be made by the common parent. The election must be made in the form of the following statement: ''THIS IS AN ELECTION UNDER § 1.1502–95 OF THE INCOME TAX REGULATIONS TO APPORTION ALL OR PART OF THE [insert THE CONSOLIDATED SECTION 382 LIMITATION, THE SUBGROUP SECTION 382 LIMITATION, THE LOSS GROUP'S NET UNREALIZED BUILT-IN GAIN, THE LOSS SUBGROUP'S NET UNREALIZED BUILT-IN GAIN, as appropriate] TO [insert name and E.I.N. of the corporation (or the corporations that compose a new loss subgroup) to which allocation is made]''. The declaration must also include the following information, as appropriate—

(i) The date of the ownership change that resulted in the consolidated section 382 limitation (or subgroup section 382 limitation) or the loss group's (or loss subgroup's) net unrealized built-in gain;

(ii) The amount of the departing member's (or loss subgroup's) pre-change net operating loss carryovers and the taxable years in which they arose that will be subject to the limitation that is being apportioned to that member (or loss subgroup);

(iii) The amount of any net unrealized built-in loss allocated to the departing member (or loss subgroup) under paragraph (e) of this section, which, if recognized, can be a pre-change attribute subject to the limitation that is being apportioned;

(iv) If a consolidated section 382 limitation (or subgroup section 382 limitation) is being apportioned, the amount of the consolidated section 382 limitation (or subgroup section 382 limitation) for the taxable year during which the former member (or new loss subgroup) ceases to be a member of the consolidated group (determined without regard to any apportionment under this section);

(v) If any net unrealized built-in gain is being apportioned, the amount of the loss group's (or loss subgroup's) net unrealized built-in gain (as determined under paragraph (c) (2)(ii) of this section) that may be apportioned to members that ceased to be members during the consolidated return year;

(vi) The amount of the value element and adjustment element of the consolidated section 382 limitation (or subgroup section 382 limitation) that is apportioned to the former member (or new loss subgroup) pursuant to paragraph (c) of this section;

(vii) The amount of the loss group's (or loss subgroup's) net unrealized built-in gain that is apportioned to the former member (or new loss subgroup) pursuant to paragraph (c) of this section;

(viii) If the former member is allocated any net unrealized built-in loss under paragraph (e) of this section, the amount of any adjustment element apportioned to the former member that is attributable to recognized built-in gains (determined in a manner that will enable both the group and the former member to apply the principles of § 1.1502–93(c));

(ix) The name and E.I.N. of the common parent making the apportionment.

(2) *Signing of the election.* The election statement must be signed by both the common parent and the former member (or, in the case of a loss subgroup, the common parent and the loss subgroup parent) by persons authorized to sign their respective income tax returns. If the allocation is made to a loss subgroup for which an election under § 1.1502–91(d)(4) is made, and not separately to its members, the election statement under this paragraph (e) must be signed by the common parent and any member of the new loss subgroup by persons authorized to sign their respective income tax returns.

(3) *Filing of the election.* The election statement must be filed by the common parent of the group that is apportioning the consolidated section 382 limitation (or the subgroup section 382 limitation) or the loss group's net unrealized built-in gain (or loss subgroup's net unrealized built-in gain) with its income tax return for the taxable year in which the former member (or new loss subgroup) ceases to be a member. The common parent must also deliver a copy of the statement to the former member (or the members of the new loss subgroup) on or before the day the group files its income tax return for the consolidated return year that the former member (or new loss subgroup) ceases to be a member. A copy of the statement must be attached to the first return of the former member (or the first return in which the members of a new loss subgroup join) that is filed after the close of the consolidated return year of the group of which the former member (or the members of a new loss subgroup) ceases to be a member.

(4) *Revocation of election.* An election statement made under paragraph (c) of this section is revocable only with the consent of the Commissioner.

§ 1.1502–96 Miscellaneous rules.

(a) *End of separate tracking of losses*—(1) *Application.* This paragraph (a) applies to a member (or a loss subgroup) with a net operating loss carryover that arose (or is treated under § 1.1502–21(c) as arising) in a SRLY, or a member (or loss subgroup) with a net unrealized built-in loss determined at the time that the member (or loss subgroup) becomes a member of the consolidated group if there is—

(i) An ownership change of the member (or loss subgroup) within six months before, on, or after becoming a member of the group; or

(ii) A period of 5 consecutive years following the day that the member (or loss subgroup) becomes a member of a group during which the member (or loss subgroup) has not had an ownership change.

(2) *Effect of end of separate tracking*—(i) *Net operating loss carryovers.* If this paragraph (a) applies with respect to a member (or loss subgroup) with a net operating loss carryover, then, starting on the day after the earlier of the change date (but not earlier than the day the member (or loss subgroup) becomes a member of the consolidated group) or the last day of the 5 consecutive year period described in paragraph (a)(1)(ii) of this section, such loss carryover is treated as described in § 1.1502–91(c)(1)(i). The preceding sentence also applies for purposes of determining whether there is an ownership change with respect to such loss carryover following such change date or 5 consecutive year period. Thus, for example, starting the day after the change date (but not earlier than the day the member (or loss subgroup) becomes a member of the consolidated group) or

the end of the 5 consecutive year period—

(A) The consolidated group which includes the new loss member or loss subgroup is no longer required to separately track owner shifts of the stock of the new loss member or subgroup parent to determine if an ownership change occurs with respect to the loss carryover of the new loss member or members included in the loss subgroup;

(B) The group is a loss group because the member's loss carryover is treated as a loss described in § 1.1502–91(c)(1)(i);

(C) There is an ownership change with respect to such loss carryover only if the group has an ownership change; and

(D) If the group has an ownership change, such loss carryover is a pre-change consolidated attribute subject to the loss group's consolidated section 382 limitation.

(ii) *Net unrealized built-in losses.* If this paragraph (a) applies with respect to a new loss member described in § 1.1502–94(a)(1)(ii) (or a loss subgroup described in § 1.1502–91(d)(2)) then, starting on the day after the earlier of the change date (but not earlier than the day the member (or loss subgroup) becomes a member of the group) or the last day of the 5 consecutive year period described in paragraph (a)(1)(ii) of this section, the member (or members of the loss subgroup) are treated, for purposes of applying § 1.1502–91(g)(2)(ii), as if they have been affiliated with the common parent for 5 consecutive years. Starting on that day, the member's (or the members of the loss subgroup's) separately computed net unrealized built-in loss is included in the determination whether the group has a net unrealized built-in loss, and there is an ownership change with respect to the member's separately computed net unrealized built-in loss only if the group (including the member) has a net unrealized built-in loss and has an ownership change. Thus, for example, starting the day after the change date (but not earlier than the day the member (or loss subgroup) becomes a member of the consolidated group), or the end of the 5 consecutive period

(A) The consolidated group which includes the new loss member or loss subgroup is no longer required to separately track owner shifts of the stock of the new loss member or subgroup parent to determine if an ownership change occurs with respect to the net unrealized built-in loss of the new loss member or members of the loss subgroup;

(B) The group includes the member's (or the loss subgroup members') separately computed net unrealized built-in loss in determining whether it is a loss group under § 1.1502–91(c)(1)(iii);

(C) There is an ownership change with respect to such net unrealized built-in loss only if the group is a loss group and has an ownership change; and

(D) If the group has an ownership change, the member's separately computed net unrealized built-in loss and its assets are taken into account in determining the group's pre-change consolidated attributes described in § 1.1502–91(e)(1) (relating to recognized built-in losses) that are subject to the group's consolidated section 382 limitation.

(iii) *Common parent not common parent for five years.* If the common parent has become the common parent of an existing group within the previous 5-year period in a transaction described in § 1.1502–75(d)(2)(ii) or (3), appropriate adjustments must be made in applying paragraphs (a)(2)(ii) and (3) of this section. In such a case, as the context requires, references to the common parent are to the former common parent.

(3) *Continuing effect of end of separate tracking*—(i) *In general.* As the context may require, a current group determines which of its members are included in a loss subgroup on any testing date by taking into account the application of this section in the former group. See the example in § 1.1502–91(f)(2). For this purpose, corporations that are treated under paragraph (a)(2)(ii) of this section as having been affiliated with the common parent of the former group for 5 consecutive years are also treated as having been affiliated with any other members that have been (or are treated as having been) affiliated with the common parent. The corporations are treated as having been affiliated with such other members for the same period of time that those members have been (or are treated as having been) affiliated with the common parent. If two or more corporations become members of the group at the same time, but paragraph (a)(1) of this section does not apply to every such corporation, then immediately after the corporations become members of the group, the corporations to which paragraph (a)(1) of this section applied are treated as not having been previously affiliated, for purposes of applying this paragraph (a)(3), with the corporations to which paragraph (a)(2)(ii) of this section did not apply.

(ii) *Example.* The following example illustrates the principles of this paragraph (a)(3):

Example. (i) L has owned all the stock of L1 for three years. At the close of December 31, Year 1, the M group purchases all the L stock, and L and L1 become members of the M group. Other than the stock of L1, L has one asset (the L loss asset) with a net unrealized built-in loss of $200 on this date. L1 has one asset with a net unrealized built-in gain of $50 (the L1 gain asset). L and L1 do not compose a loss subgroup because they do not meet the five year affiliation requirement of § 1.1502–91(d)(2)(i). L is a new loss member, and M's purchase of L causes an ownership change of L. At the close of December 31, Year 4, at a time when L1 has been affiliated with the M group for three years and has been affiliated with L for six years, the S group purchases all the M stock. On this date, the L loss asset has a net unrealized built-in loss of $300, the L1 gain asset has a net unrealized built-in gain of $80, and M, the common parent of the M group, has one asset with a net unrealized built-in gain of $200.

(ii) Paragraph (a)(1) of this section applies to L because L is a new loss member described in § 1.1502–94(a)(1)(ii) that has an ownership change upon becoming a member of the M group on December 31, Year 1. Accordingly, L is treated as having been affiliated with M for 5 consecutive years, and the L loss asset with a net unrealized built-in loss of $300 is included in the determination whether the M group has a net unrealized built-in loss.

(iii) The S group determines which of its members are included in a loss subgroup by taking into account application of paragraph (a) of this section in the M group. For this purpose, application of paragraph (a) of this section causes L to be treated as having been affiliated with M (or as having been a member of the M group) for 5 consecutive years as of January 1, Year 2. Therefore, the S group includes L in the determination whether the M subgroup acquired by S on December 31, Year 4, has a net unrealized built-in loss.

(iv) Because paragraph (a)(1) of this section applied to L when L became a member of the M group, but did not apply to L1, L is treated as not having been affiliated with L1 before L and L1 joined the M group. Also, L1 is not included in the determination whether the M subgroup has a net unrealized built-in loss because L1 has not been continuously affiliated with members of the M group for the five consecutive year period ending immediately before they become members of the S group. See § 1.1502–91(g)(2).

(4) *Special rule for testing period.* For purposes of determining the beginning of the testing period for a loss group, the member's (or loss subgroup's) net operating loss carryovers (or net unrealized built-in loss) described in paragraph (a)(2) of this section are considered to arise—

(i) In a case described in paragraph (a)(1)(i) of this section, in a taxable year that begins not earlier than the later of the day following the change date or the day that the member becomes a member of the group; and

(ii) In a case described in paragraph (a)(1)(ii) of this section, in a taxable year that begins 3 years before the end of the 5 consecutive year period.

(5) *Limits on effects of end of separate tracking.* The rule contained in this paragraph (a) applies solely for purposes of §§ 1.1502–91 through 1.1502–95 and this section (other than paragraph (b)(2)(ii)(B) of this section (relating to the definition of pre-change attributes of a subsidiary)) and § 1.1502–98, and not for purposes of other provisions of the consolidated return regulations. However, the rule contained in this paragraph (a) does apply in §§ 1.1502–15(g), 1.1502–21(g) and 1.1502–22(g) for purposes of determining the composition of loss subgroups defined in § 1.1502–91(d). See also paragraph (c) of this section for the continuing effect of an ownership change with respect to pre-change attributes.

(b) *Ownership change of subsidiary*—(1) *Ownership change of a subsidiary because of options or plan or arrangement.* Notwithstanding § 1.1502–92, a subsidiary may have an ownership change for purposes of section 382 with respect to its attributes which a group or loss subgroup includes in making a determination under § 1.1502–91(c)(1) (relating to the definition of loss group) or § 1.1502–91(d) (relating to the definition of loss subgroup). The subsidiary has such an ownership change if it has an ownership change under the principles of § 1.1502–95(b) and section 382 and the regulations thereunder (determined on a separate entity basis by treating the subsidiary as not being a member of a consolidated group) in the event of—

(i) The deemed exercise under § 1.382–4(d) of an option or options (other than an option with respect to stock of the common parent) held by a person (or persons acting pursuant to a plan or arrangement) to acquire more than 20 percent of the stock of the subsidiary; or

(ii) An increase by 1 or more 5-percent shareholders, acting pursuant to a plan or arrangement to avoid an ownership change of a subsidiary, in their percentage ownership interest in the subsidiary by more than 50 percentage points during the testing period of the subsidiary through the acquisition (or deemed acquisition pursuant to § 1.382–4(d)) of ownership interests in the subsidiary and in higher-tier members with respect to the subsidiary.

(2) *Effect of the ownership change*—(i) *In general.* If a subsidiary has an ownership change under paragraph (b)(1) of this section, the amount of consolidated taxable income for any post-change year that may be offset by the pre-change losses of the subsidiary shall not exceed the section 382 limitation for the subsidiary. For purposes of this limitation, the value of the subsidiary is determined solely by reference to the value of the subsidiary's stock.

(ii) *Pre-change losses.* The pre-change losses of a subsidiary are—

(A) Its allocable part of any consolidated net operating loss which is attributable to it under § 1.1502–21(b) (determined on the last day of the consolidated return year that includes the change date) that is not carried back and absorbed in a taxable year prior to the year including the change date;

(B) Its net operating loss carryovers that arose (or are treated under § 1.1502–21(c) as having arisen) in a SRLY; and

(C) Its recognized built-in loss with respect to its separately computed net unrealized built-in loss, if any, determined on the change date.

(3) *Coordination with §§ 1.1502–91, 1.1502–92, and 1.1502–94.* If an increase in percentage ownership interest causes an ownership change with respect to an attribute under this paragraph (b) and under § 1.1502–92 on the same day, the ownership change is considered to occur only under § 1.1502–92 and not under this paragraph (b). See § 1.1502–94 for anti-duplication rules relating to value.

(4) *Example.* The following example illustrates paragraph (b)(1)(ii) of this section:

Example. Plan to avoid an ownership change of a subsidiary. (i) L owns all the stock of L1, L1 owns all the stock of L2, L2 owns all the stock of L3, and L3 owns all the stock of L4. The L group has a consolidated net operating loss arising in Year 1 that is carried over to Year 2. L has assets other than its L1 stock with a value of $900. L1, L2, and L3 own no assets other than their L2, L3, and L4 stock. L4 has assets with a value of $100. During Year 2, A, B, C, and D, acting pursuant to a plan to avoid an ownership change of L4, acquire the following ownership interests in the members of the L loss group: (A) on September 11, Year 2, A acquires 20 percent of the L1 stock from L and B acquires 20 percent of the L2 stock from L1; and (B) on September 20, Year 2, C acquires 20 percent of the stock of L3 from L2 and D acquires 20 percent of the stock of L4 from L3.

(ii) The acquisitions by A, B, C, and D pursuant to the plan have increased their respective percentage ownership interests in L4 by approximately 10, 13, 16, and 20 percentage points, for a total of approximately 59 percentage points during the testing period. This more than 50 percentage point increase in the percentage ownership interest in L4 causes an ownership change of L4 under paragraph (b)(2) of this section.

(c) *Continuing effect of an ownership change.* A loss corporation (or loss subgroup) that is subject to a limitation under section 382 with respect to its pre-change losses continues to be subject to the limitation regardless of whether it becomes a member or ceases to be a member of a consolidated group. See § 1.382–5(d) (relating to successive ownership changes and absorption of a section 382 limitation).

(d) *Losses reattributed under § 1.1502–20(g)*—(1) *In general.* This paragraph (d) contains rules relating to net operating carryovers that are reattributed to the common parent under § 1.1502–20(g). References in this paragraph (d) to a subsidiary are references to the subsidiary (or lower tier subsidiary) whose net operating loss carryover is reattributed to the common parent.

(2) *Deemed section 381(a) transaction.* Under § 1.1502–20 (g)(1), the common parent succeeds to the reattributed losses as if the losses were succeeded to in a transaction described in section 381(a). In general, §§ 1.1502–91 through 1.1502–95, this section, and § 1.1502–98 are applied to the reattributed net operating loss carryovers in accordance with that characterization. See generally, § 1.382–2(a)(1)(ii) (relating to distributor or transferor loss corporations in transactions under section 381), § 1.1502–(1)(f)(4) (relating to the definition of predecessor and successor) and § 1.1502–91(j) (relating to predecessor and successor corporations). For example, if the reattributed net operating loss carryover is a pre-change attribute subject to a section 382 limitation, it remains subject to that limitation following the reattribution. In certain cases, the limitation applicable to the reattributed loss is zero unless the common parent apportions all or part of the limitation to itself. (See paragraph (d)(4) of this section.)

(3) *Rules relating to owner shifts*—(i) *In general.* Any owner shift of the subsidiary (including any deemed owner shift resulting from section 382(g)(4)(D) or 382(l)(3)) in connection with the disposition of the stock of the subsidiary is not taken into account in determining whether there is an ownership change with respect to the reattributed net operating loss carryover. However, any owner shift with respect to the successor corporation that is treated as continuing in existence under § 1.382–2(a)(1)(ii) must be taken into account for such purpose if such owner shift is effected by the reattribution and an owner shift of the stock of the subsidiary not held directly or indirectly by the common parent would

have been taken into account if such shift had occurred immediately before the reattribution. See paragraph (d)(3)(ii) *Example 2* of this section.

(ii) *Examples.* The following examples illustrate the principles of this paragraph (d)(3):

Example 1. No owner shift for reattributed loss. (i) P, the common parent of a consolidated group, owns 60% of the stock of L, and B owns the remaining 40%. L has a net operating loss carryover of $100 from year 1 that it carries over to Years 2, 3, and 4. At the beginning of Year 2, P purchases 40% of the L stock from B, which does not cause an ownership change of L. On December 31, Year 3, P sells all of the L stock to M. Pursuant to § 1.1502–20(g), P reattributes $10 of L's $100 net operating loss carryover to itself, and L carries $90 of its net operating loss carryover to its Year 4.

(ii) The sale of the L stock to M does not cause an owner shift that is taken into account in determining if there is an ownership change with respect to the $10 reattributed loss. Following the reattribution, § 1.1502–94(b) continues to apply to determine if there is an ownership change with respect to the $10 reattributed loss, until, under paragraph (a) of this section, the loss is treated as described in § 1.1502–91(c)(1)(i). In applying § 1.1502–94(b), the 40 percentage point increase by the P shareholders prior to the reattribution is taken into account. The sale of the L stock to M does cause an ownership change of L with respect to the $90 of its net operating loss that it carries over to Year 4.

Example 2. Owner shift for reattributed loss. The facts are the same as in *Example 1*, except that P only purchases 20% of the L stock from B and sells 80% of the L stock to M. L is a new loss member, and, under § 1.1502–94(b)(1), an owner shift of the stock of L not held directly or indirectly by the common parent (the 20% of L stock still held by B) would have been taken into account if such shift had occurred immediately before the reattribution. Following the reattribution, § 1.1502–94(b) continues to apply to determine if there is an ownership change with respect to the $10 reattributed loss, until, under paragraph (a) of this section, the loss is treated as described in § 1.1502–91(c)(1)(i). With respect to the $10 reattributed loss, the P shareholders have increased their percentage ownership interest by 40 percentage points. The P shareholders have increased their ownership interests by 20 percentage points as a result of P's purchase of stock from B, and, under § 1.382–2(a)(1)(ii), are treated as increasing their interests by an additional 20 percentage points as a result of the reattribution. (The acquisition of the L stock by M does not, however, effect an owner shift for the $10 of reattributed loss.) The sale of the L stock to M causes an ownership change of L with respect to the $90 of net operating loss that L carries over to Year 4.

(4) *Rules relating to the section 382 limitation—(i) Reattributed loss is a pre-change separate attribute of a new loss member.* If the reattributed net operating loss carryover is a pre-change separate attribute of a new loss member that is subject to a separate section 382 limitation prior to the disposition of subsidiary stock, the common parent's limitation with respect to that loss is zero, except to the extent that the common parent apportions to itself, under paragraph (d)(5) of this section, all or part of such limitation. A separate section 382 limitation is the limitation described in § 1.1502–94(b) that applies to a pre-change separate attribute.

(ii) *Reattributed loss is a pre-change subgroup attribute.* If the reattributed net operating loss carryover is a pre-change subgroup attribute subject to a subgroup section 382 limitation prior to the disposition of subsidiary stock, and, immediately after the reattribution, the common parent is not a member of the loss subgroup, the section 382 limitation with respect to that net operating loss carryover is zero, except to the extent that the common parent apportions to itself, under paragraph (d)(5) of this section, all or part of the subgroup section 382 limitation. See, however, § 1.1502–95(d)(3) *Example 6*, for an illustration of a case where the common parent, as successor to the subsidiary, is a member of the loss subgroup immediately after the reattribution.

(iii) *Potential application of section 382(l)(1).* In general, the value of the stock of the common parent is used to determine the section 382 limitation for an ownership change with respect to the reattributed net operating loss carryover that occurs at the time of, or after, the reattribution. For example, if the net operating loss carryover is a pre-change consolidated attribute, the value of the stock of the common parent is used to determine the section 382 limitation, and no adjustment to that value is required because of the deemed section 381(a) transaction. However, if the net operating loss carryover is a pre-change separate attribute of a new loss member (or is a pre-change attribute of a loss subgroup member and the common parent was not the loss subgroup parent immediately before the reattribution), the deemed section 381(a) transaction is considered to constitute a capital contribution with respect to the new loss member (or loss subgroup member) for purposes of section 382(l)(1). Accordingly, if that section applies because the deemed capital contribution is (or is considered under section 382(l)(1)(B) to be) part of a plan described in section 382(l)(1)(A), the value of the stock of the common parent after the deemed section 381(a) transaction must be adjusted to reflect the capital contribution. Ordinarily, this will require the value of the stock of the common parent to be reduced to an amount that represents the value of the stock of the subsidiary (or loss subgroup of which the subsidiary was a member) when the reattribution occurred.

(iv) *Duplication or omission of value.* In determining any section 382 limitation with respect to the reattributed net operating loss carryover and with respect to other pre-change losses, appropriate adjustments must be made so that value is not improperly omitted or duplicated as a result of the reattribution. For example, if the subsidiary has an ownership change upon its departure, and the common parent (as successor) has an ownership change with respect to the reattributed pre-change separate attribute upon its reattribution under paragraph (d)(3)(i) of this section, proper adjustments must be made so that the value of the subsidiary is not taken into account more than once in determinining the section 382 limitation for the reattributed loss and the loss that is not reattributed.

(v) *Special rule for continuity of business requirement.* If the reattributed net operating loss carryover is a pre-change attribute of new loss member and the reattribution occurs within the two year period beginning on the change date, then, starting immediately after the reattribution, the continuity of business requirement of section 382(c)(1) is applied with respect to the business enterprise of the common parent. Similar principles apply if the reattributed net operating loss carryover is a pre-change subgroup attribute and, on the day after the reattribution, the common parent is not a member of the loss subgroup.

(5) *Election to reattribute section 382 limitation*—(i) *Effect of election.* The common parent may elect to apportion to itself all or part of any separate section 382 limitation or subgroup section 382 limitation to which the net operating loss carryover is subject immediately before the reattribution. However, no net unrealized built-in gain of the member (or loss subgroup) whose net operating loss carryover is reattributed can be apportioned to the common parent. The principles of § 1.1502–95(c) apply to the apportionment, treating, as the context requires, references to the former member as references to the common parent, and references to the consolidated section 382 limitation as references to the separate section 382 limitation (or subgroup section 382 limitation) that is being apportioned. Thus, for example, the common parent can reattribute to itself all or part of the value element or adjustment element of the limitation, and any part of such

element that is apportioned requires a corresponding reduction in such element of the separate section 382 limitation of the subsidiary whose net operating loss carryover is reattributed (or in the subgroup section 382 limitation if the reattributed loss is a pre-change subgroup attribute). Appropriate adjustments must be made to the separate section 382 limitation (or subgroup section 382 limitation) for the consolidated return year in which the reattribution is made to reflect that the reattributed net operating loss carryover is an attribute acquired by the common parent during the year in a transaction to which section 381(a) applies. The election is made by the common parent as part of the election to reattribute the net operating loss carryover. See § 1.1502–20(g)(4) for the time and manner of making the election.

(ii) *Examples.* The following examples illustrate the principles of this paragraph (d)(5):

Example 1. Consequence of apportionment. (i) P, the common parent of a consolidated group, purchases all of the stock of L on December 31, Year 1. L carries over a net operating loss arising in Year 1 to each of the next 5 taxable years. The purchase of the L stock causes an ownership change of L, and results in a separate section 382 limitation of $10 for L's net operating loss carryover based on the value of the L stock. On July 2, Year 3, P sells 30 percent of the L stock to A. Under § 1.1502–20(g), P elects to apportion to itself $110 of L's $200 net operating loss carryover. P also elects to apportion to itself $6 of the $10 value element of the separate section 382 limitation.

(ii) For the consolidated return years ending after December 31, Year 3, P's separate section 382 limitation with respect to the reattributed net operating loss carryover is $6, adjusted as appropriate for any short taxable year, unused section 382 limitation, or other adjustment. For the P group's consolidated return year ending December 31, Year 3, the separate section 382 limitation for L's net operating loss carryover is $8, the sum of $5 and $3. Five dollars of the limitation is the amount that bears the same relationship to $10 as the number of days in the period ending with the deemed section 381(a) transaction, 183 days, bears to 365. Three dollars of the limitation is the amount that bears the same relationship to $6 as the number of days in the period between July 3 and December 31, 182, bears to 365.

(iii) For L's taxable years ending after December 31, Year 3, L's separate section 382 limitation for its $90 of net operating loss carryover that was not reattributed to P is $4, adjusted as appropriate for any short taxable year, unused section 382 limitation, or other adjustment. For L's short taxable year ending December 31, Year 3, the section 382 limitation for its $90 of net operating loss carryover is $2, the amount that bears the same relationship to $4 (the portion of the value element that was not apportioned to P), as the number of days during the short taxable year, 182 days, bears to 365. See § 1.382–5(c).

Example 2. No apportionment required for consolidated pre-change attribute. (i) P, the common parent of a consolidated group, forms L. For Year 1, L has an operating loss of $70 that is not absorbed and is included in the group's consolidated net operating loss that is carried over to subsequent years. On January 1 of Year 3, A buys all of the P stock and the P group has an ownership change. The consolidated section 382 limitation based on the value of the P stock is $10.

(ii) On April 13 of Year 4, P sells all of the stock of L to B and, under § 1.1502–20(g), elects to reattribute to itself $45 of L's net operating loss carryover. Following the reattribution, the $45 portion of the Year 1 net operating loss carryover retains its character as a pre-change consolidated attribute, and remains subject to so much of the $10 consolidated section 382 limitation as P does not elect to apportion to L under § 1.1502–95(c).

(e) *Time and manner of making election under § 1.1502–91(d)(4)*—(1) *In general.* This paragraph (e) prescribes the time and manner of making the election under § 1.1502–91(d)(4), relating to treating two or more corporations as treating the section 1504(a)(1) requirement of § 1.1502–91(d)(1)(ii) and (d)(2)(ii) as satisfied.

(2) *Election statement.* An election under § 1.1502–91(d)(4) must be made by the common parent. The election must be made in the form of the following statement: ''THIS IS AN ELECTION UNDER § 1.1502–91(d)(4) TO TREAT THE FOLLOWING CORPORATIONS AS MEETING THE REQUIREMENTS OF § 1.1502–91 (d)(1)(ii) AND (d)(2)(ii) IMMEDIATELY AFTER THEY BECAME MEMBERS OF THE GROUP.'' [List separately the name of each corporation, its E.I.N., and the date that it became a member of the group]. If separate elections are being made for corporations that became members at different times or that were acquired from different affiliated groups, provide a separate statement and list for each election.

(3) The election statement must be filed by the common parent with its income tax return for the consolidated return year in which the members with respect to which the election is made become members of the group. Such election must be filed on or before the due date for such income tax return, including extensions.

(4) An election made under this paragraph (e) is irrevocable.

§ 1.1502–97 Special rules under section 382 for members under the jurisdiction of a court in a title 11 or similar case.

[Reserved]

§ 1.1502–98 Coordination with section 383.

The rules contained in §§ 1.1502–91 through 1.1502–96 also apply for purposes of section 383, with appropriate adjustments to reflect that section 383 applies to credits and net capital losses. Similarly, in the case of net capital losses, general business credits, and excess foreign taxes that are pre-change attributes, § 1.383–1 applies the principles of §§ 1.1502–91 through 1.1502–96. For example, if a loss group has an ownership change under § 1.1502–92 and has a carryover of unused general business credits from a pre-change consolidated return year to a post-change consolidated return year, the amount of the group's regular tax liability for the post-change year that can be offset by the carryover cannot exceed the consolidated section 383 credit limitation for that post-change year, determined by applying the principles of §§ 1.383–1(c)(6) and 1.1502–93 (relating to the computation of the consolidated section 382 limitation).

§ 1.1502–99 Effective dates.

(a) *In general.* Except as provided in paragraphs (b) and (c) of this section, §§ 1.1502–91 through 1.1502–96 and § 1.1502–98 apply to any testing date on or after June 25, 1999. Sections 1.1502–94 through 1.1502–96 also apply to a corporation that becomes a member of a group or ceases to be a member of a group (or loss subgroup) on any date on or after June 25, 1999.

(b) *Special rules*—(1) *Election to treat subgroup parent requirement as satisfied.* Section 1.1502–91(d)(4), § 1.1502–91(d)(7), Example 4, § 1.1502–92(b)(1)(iii), § 1.1502–92(b)(2), Example 5, the last two sentences of § 1.1502–95(b)(3), § 1.1502–95(d)(2)(i), and § 1.1502–96(e)(all of which relate to the election under § 1.1502–91(d)(4) to treat the loss subgroup parent requirement as satisfied) apply to corporations that become members of a consolidated group in taxable years for which the due date of the income tax return (without extensions) is after June 25, 1999.

(2) *Principal purpose of avoiding a limitation.* The third sentence of § 1.1502–91(d)(5) (relating to members excluded from a loss subgroup) applies to corporations that become members of a consolidated group on or after June 25, 1999.

(3) *Ceasing to be a member of a loss subgroup*—(i) *Ownership change of a loss subgroup.* Section 1.1502–95(d)(2)(ii) and § 1.1502–95(d)(3), Example 3 apply to corporations that cease to bear a relationship described in section 1504(a)(1) to a loss subgroup parent in taxable years for which the

due date of the income tax return (without extensions) is after June 25, 1999.

(ii) *Expiration of 5-year period.* Section 1.1502–95(d)(2)(iii) applies with respect to the day after the last day of any 5 consecutive year period described in that section that ends in a taxable year for which the due date of the income tax return (without extensions) is after June 25, 1999.

(4) *Reattribution of net operating loss carryovers under § 1.1502–20(g).* Section 1.1502–96(d) applies to reattributions of net operating loss carryovers (or capital loss carryovers) in taxable years for which the due date of the income tax return (without extensions) is after June 25, 1999; except that the election under § 1.1502–96(d)(5) (relating to an election to reattribute section 382 limitation) can be made with any election under § 1.1502–20(g)(4) to reattribute to the common parent a net operating loss or net capital loss that is timely filed on or after June 25, 1999.

(5) *Election to apportion net unrealized built-in gain.* In the case of corporations that cease to be members of a loss group (or loss subgroup) before June 25, 1999 in a taxable year for which the due date of the income tax return (without extensions) is after June 25, 1999, § 1.1502–95(a), (b), (c), and (f) apply to those corporations if the common parent makes the election described in the second sentence of paragraph (c)(1) of § 1.1502–95 in the time and manner prescribed in paragraph (f) of § 1.1502–95.

(c) *Testing period may include a period beginning before June 25, 1999—*

(1) *In general.* A testing period for purposes of §§ 1.1502–91 through 1.1502–96 and 1.1502–98 may include a period beginning before June 25, 1999. Thus, for example, in applying § 1.1502–92(b)(1)(i)(relating to the determination of an ownership change of a loss group), the determination of the lowest percentage of ownership interest of any 5-percent shareholder of the common parent during a testing period ending on a testing date occurring on or after June 25, 1999 takes into account the period beginning before June 25, 1999, except to the extent that the period is more than 3 years before the testing date or is otherwise before the beginning of the testing period. See § 1.1502–92(b)(1).

(2) *Transition rule for net unrealized built-in loss.* A loss group (or loss subgroup) that has a net unrealized built-in loss on a testing date on or after June 25, 1999 may apply § 1.1502–91A(g) (and § 1.1502–96A(a) as it relates to § 1.1502–91A(g)) for the period ending on the day before June 25, 1999 to determine under § 1.382–2T(d)(ii)(A) the earliest date that its testing period begins (treating the day before June 25, 1999 as the end of a taxable year.) Thus, for example, if a consolidated group with no net operating losses has a net unrealized built-in loss determined under § 1.1502–91(g) on a testing date after June 25, 1999, but, under § 1.1502–91A(g), does not have a net unrealized built-in loss for the period ending on the day before June 25, 1999, the group's testing period begins no earlier than June 25, 1999.

PART 602—OMB CONTROL NUMBERS UNDER THE PAPERWORK REDUCTION ACT

Par. 14. The authority citation for part 602 continues to read as follows:

Authority: 26 U.S.C. 7805.

Par. 15. In § 602.101, paragraph (b) is amended by removing the entry for § 1.1502–95T, revising the entry for § 1.1502–20, and adding entries in numerical order to the table to read as follows:

§ 602.101 OMB Control numbers.

* * * * *

(b) * * *

CFR part or section where identified and described	Current OMB control No.
* * * * *	
1.1502–20	1545–1160 1545–1218
* * * * *	
1.1502–95	1545–1218
1.1502–96	1545–1218
1.1502–95A	1545–1218
* * * * *	

John M. Dalrymple,

Acting Deputy Commissioner of Internal Revenue.

Approved: June 18, 1999.

Donald C. Lubick,

Assistant Secretary of the Treasury.

[FR Doc. 99–16162 Filed 6–25–99; 1:27 pm]

BILLING CODE 4830–01–U

DEPARTMENT OF THE TREASURY

Internal Revenue Service

26 CFR Parts 1 and 602

[TD 8825]

RIN 1545–AU33

Regulations Under Section 382 of the Internal Revenue Code of 1986; Application of Section 382 in Short Taxable Years and With Respect to Controlled Groups

AGENCY: Internal Revenue Service (IRS), Treasury.

ACTION: Final and temporary regulations.

SUMMARY: This document contains final regulations relating to limitations on net operating loss carryovers and certain built-in losses following an ownership change of a corporation. The regulations implement the statutory authority under section 382(m) of the Internal Revenue Code to prescribe regulations concerning short taxable years and controlled groups of corporations. Additional rules are adopted relating principally to corporations that cease to exist following a merger (or similar transaction) or that have two or more ownership changes. These final regulations replace temporary regulations that provided guidance on these topics.

DATES: *Effective Dates:* These regulations are effective June 25, 1999.

Applicability Dates: For dates of application and special transition rules, see Effective Dates under **SUPPLEMENTARY INFORMATION.**

FOR FURTHER INFORMATION CONTACT: Lee A. Kelley at 202–622–7550 (not a toll-free number).

SUPPLEMENTARY INFORMATION:

Paperwork Reduction Act

The collection of information contained in these final regulations has been reviewed and approved by the Office of Management and Budget in accordance with the Paperwork Reduction Act (44 U.S.C. 3507) under control number 1545–1434. Responses to this collection of information are required to obtain a benefit relating to the value of a controlled group member.

An agency may not conduct or sponsor, and a person is not required to respond to, a collection of information unless the collection of information displays a valid control number.

The estimated annual burden per respondent is one quarter hour.

Comments concerning the accuracy of this burden estimate and suggestions for

reducing this burden should be sent to the Internal Revenue Service, Attn: IRS Reports Clearance Officer, OP:FS:FP, Washington, DC 20224, and to the Office of Management and Budget, Attn: Desk Officer for the Department of the Treasury, Office of Information and Regulatory Affairs, Washington, DC, 20503.

Books and records relating to this collection of information must be retained as long as their contents may become material in the administration of any internal revenue law. Generally, tax returns and tax return information are confidential, as required by 26 U.S.C. 6103.

Background and Explanation of Provisions

On February 4, 1991, the IRS and Treasury issued a notice of proposed rulemaking, CO–077–90 (56 FR 4183) (the 1991 controlled group proposed regulations), setting forth rules regarding the application of section 382 to controlled groups of corporations and to corporations that undergo a merger or similar transaction. The 1991 controlled group proposed regulations also related to the determination of the section 382 limitation following an ownership change in the case of short taxable year, and to the valuation of the stock of a loss corporation for purposes of determining the amount of the section 382 limitation. On the same day, the IRS and Treasury also issued proposed regulations relating to the application of section 382 to affiliated groups of corporations filing consolidated returns (CO–132–87, 56 FR 4194), and to the use of built-in deductions and net operating losses and capital losses, including the carryover and carryback of separate return year (SRLY) losses, of members of consolidated groups (CO–078–90, 56 FR 4228). A public hearing regarding the three sets of proposed regulations was held on April 8, 1991.

On June 27, 1996, the IRS and Treasury published temporary regulations (TD 8679, 61 FR 33313) (the 1996 controlled group temporary regulations) relating to section 382. Except for the addition of a provision relating to the effects of successive ownership changes, these regulations were substantially identical to the 1991 controlled group proposed regulations. A notice of proposed rulemaking cross-referencing the temporary regulations was published in the **Federal Register** on the same day (CO–026–96, 61 FR 33391) (the 1996 controlled group proposed regulations) and the 1991 controlled group proposed regulations were withdrawn. No written comments were received on the 1996 controlled group proposed regulations and no public hearing was held. Also on June 27, 1996, the IRS and Treasury published temporary regulations relating to the application of section 382 to affiliated groups of corporations filing consolidated returns (TD 8678, 61 FR 33335) and the SRLY limitation (TD 8677, 61 FR 33321). Notices of proposed rulemaking cross-referencing these temporary regulations were published on the same day (CO–025–96, 61 FR 33395 and CO–024–96, 61 FR 33393), and the corresponding proposed regulations published in 1991 were withdrawn.

The 1996 controlled group proposed regulations are adopted as revised by this Treasury decision and the corresponding temporary regulations are removed. The final regulations are substantially the same as the 1996 controlled group proposed regulations, with one significant change relating to built-in losses of a member of a controlled group of corporations. This change is discussed below.

Under section 382, if an ownership change occurs with respect to a loss corporation (as defined in section 382 and the regulations thereunder), the amount of the loss corporation's taxable income for a post-change year that may be offset by the net operating loss carryovers arising before the ownership change are subject to a limitation known as the section 382 limitation. The section 382 limitation for a post-change taxable year of the loss corporation generally equals the fair market value of the stock of the corporation immediately before the ownership change multiplied by the long-term tax exempt rate (a rate of return published periodically in the Internal Revenue Bulletin).

In addition to net operating loss carryovers, the recognized built-in losses of corporations that have a net unrealized built-in loss on the ownership change date are also subject to the section 382 limitation. In general, a corporation has a net unrealized built-in loss on its ownership change date if the adjusted basis of its assets exceeds their fair market value, and such excess is greater than the threshold amount under section 382(h)(3)(B). In general, recognized built-in losses are losses with respect to assets held on the change date that are recognized within the 5-year period beginning on the ownership change date. The recognized built-in loss on an asset, however, is limited to the lesser of the loss recognized on its disposition or the amount by which the adjusted basis of the asset exceeded its fair market value on the change date.

Consistent with the proposed regulations, the final regulations require appropriate adjustments to the value of a loss corporation that is a member of a controlled group of corporations so that the same value is not included more than once in computing the section 382 limitations for the loss corporations that are members of the controlled group. In general, adjustments are required only when corporations are members of the same controlled group both when a pre-change loss arises and on the date of the ownership change. Thus, adjustments are required if a loss corporation is a component member of the same controlled group as another member (i) on December 31 of the taxable year in which a pre-change loss arises (or the change date, if earlier) and (ii) on the date that the loss corporation has an ownership change. If a loss corporation has pre-change losses that arise in different taxable years, the component members of the controlled group with respect to losses arising in each taxable year may differ. Therefore, as in the 1996 controlled group proposed regulations, the final regulations are applied by determining a controlled group with respect to each year's pre-change loss of the corporation (a controlled group loss).

To avoid duplication of value in connection with a controlled group loss, the value of the stock of each corporation that is a component member of the controlled group with respect to a controlled group loss is reduced by the value of the stock of other component members that it directly owns immediately before the ownership change. A second adjustment (more fully explained in the preamble to the 1991 controlled group proposed regulations) permits a lower tier member to elect to restore some or all of the previously reduced value to a member that directly owns its stock.

In identifying controlled group losses, the determination of the taxable year to which a net operating loss carryover is attributable usually presents no difficulty. The determination of the taxable year in which a net unrealized built-in loss accrues, however, is more problematic. To address some concerns in this area, the final regulations include an irrebutable presumption that certain built-in losses are attributable to the period before a particular taxable year. The presumption applies to a loss corporation that had an ownership change prior to the first day of the taxable year in question, and whose net unrealized built-in losses became subject to a section 382 limitation as a result of that ownership change. Under

the presumption, any built-in loss in such an asset is considered to be attributable to a period prior to the taxable year in question to the extent of the built-in loss in that asset on the previous change date.

Effective Dates

Section 1.382–5 (relating to the section 382 limitation) generally applies to a loss corporation that has an ownership change to which section 382(a), as amended by the Tax Reform Act of 1986, applies. The rules in that section relating to successive ownership changes, however, apply to taxable years of a loss corporation beginning on or after January 1, 1997. Section 1.382–8 (relating to controlled groups of corporations) generally applies to a loss corporation that has an ownership change with respect to a controlled group loss on or after January 1, 1997. Transition rules are provided for members of controlled groups that have ownership changes before that date. The rules in § 1.382–1(a)(iv) (relating to separate tracking of certain loss corporations) apply to testing dates on or after January 29, 1991. The rules in § 1.382–2 (a) (4) and (a) (5) relating to successor or predecessor corporations in other than corporate reorganizations apply to testing dates on or after January 1, 1997.

Special Analysis

It has been determined that this Treasury decision is not a significant regulatory action as defined in EO 12866. It has also been determined that section 553 of the Administrative Procedure Act (5 U.S.C. chapter 5) does not apply to these regulations. It is hereby certified that these regulations do not have a significant economic impact on a substantial number of small entities. This certification is based on the fact that the collection of information in this regulation is a statement of election that it is estimated will take less than one hour to prepare. The statement will be filed by electing corporations that are members of a controlled group of corporations (determined by applying a 50% common control requirement) both (1) when a net operating loss carryover (or certain other tax attributes) arises and (2) a member of the controlled group has an ownership change under section 382 of the Internal Revenue Code with respect to that net operating loss carryover (or other attribute). (An affiliated group of corporations that files a consolidated return is treated as a single corporation for this purpose, which reduces the number of potential filers.) Because the election is only filed with respect to an ownership change, it is unlikely that a corporation will file the election frequently. Therefore, a Regulatory Flexibility Analysis under the Regulatory Flexibility Act (5 U.S.C. chapter 6) is not required. Pursuant to section 7805(f) of the Internal Revenue Code, the notice of proposed rulemaking preceding these regulations was submitted to the Small Business Administration for comment on its impact on small business.

Drafting information. The principal author of these regulations is Lee A. Kelley of the Office of Assistant Chief Counsel (Corporate). Other personnel from the IRS and Treasury participated in their development.

List of Subjects

26 CFR Part 1

Income taxes, Reporting and recordkeeping requirements.

26 CFR Part 602

Reporting and recordkeeping requirements.

Adoption of Amendments to the Regulations

Accordingly, 26 CFR parts 1 and 602 are amended as follows:

PART 1—INCOME TAXES

Paragraph 1. The authority citation for part 1 is amended by removing entries for sections 1.382–5T and 1.382–8T and by adding entries in numerical order to read in part as follows:

Authority: 26 U.S.C. 7805 * * *

Section 1.382–5 also issued under 26 U.S.C. 382(m). * * *

Section 1.382–8 also issued under 26 U.S.C. 382(m). * * *

Par. 2. Section 382–1 is amended by:

1. Revising the entry for § 1.382–2, paragraph (a)(1)(iv).
2. Adding an entry for § 1.382–2, paragraph (a)(1)(v).
3. Adding entries for § 1.382–2, paragraphs (a)(5) and (a)(6).
4. Removing the entries for § 1.382–2T, paragraphs (f)(1)(i), (f)(1)(ii), and (f)(1)(iii).
5. The entry for § 1.382–4 is amended as follows:
   a. The entry for paragraph (b) is revised.
   b. Entries for paragraphs (b)(1) and (b)(2) are added.
6. Removing the entry for § 1.382–5.
7. Redesignating the entry for § 1.382–5T as § 1.382–5 and revising the section heading.
8. Removing the entry for § 1.382–8.
9. Redesignating the entry for § 1.382–8T as § 1.382–8, revising the section heading, and adding entries for paragraphs (b) (1) and (b) (2).

The revision and additions read as follows:

§ 1.382–1 Table of contents.

* * * * *

§ 1.382–2 General rules for ownership change.

(a) * * *

(1) * * *

(iv) End of separate accounting for losses and credits of distributor or transferor corporation.

(v) Application to other successor corporations.

* * * * *

(5) Successor corporation.

(6) Predecessor corporation.

* * * * *

§ 1.382–4 Constructive ownership of stock.

* * * * *

(b) Attribution from corporations, partnerships, estates and trusts.

(1) [Reserved].

(2) Limitation.

* * * * *

§ 1.382–5 Section 382 limitation.

* * * * *

§ 1.382–8 Controlled groups.

* * * * *

(b) * * *

(1) In general.

(2) Presumption regarding net unrealized built-in loss.

* * * * *

§ 1.1382–2 [Amended]

Par. 2a. Section 1.382–2 is amended by removing paragraph (a)(1)(iv).

Par. 3. Section 1.382–2T is amended as follows:

1. In paragraph (e)(2)(iv) *Example (2)*(ii), remove the reference ''paragraph (f)(1)(ii)'' and add ''§ 1.382–2(a)(1)(iv)'' in its place.
2. Paragraph (f)(1)(ii) is redesignated as paragraph (a)(1)(iv) of § 1.382–2.
3. Paragraph (f)(1) is revised.
4. Paragraphs (f)(4) and (f)(5) are redesignated as paragraphs (a)(5) and (a)(6) of § 1.382–2, respectively.
5. New paragraphs (f)(4) and (f)(5) are added.
6. In paragraph (h)(2)(i)(A), remove the language ''and solely for purposes of determining whether a loss corporation has an ownership change''.

The revision and additions read as follows:

§ 1.382–2T Definition of ownership change under section 382, as amended by the Tax Reform Act of 1986 (temporary).

* * * * *

(f) *Definitions.* * * *

(1) *Loss corporation.* See section 382 and § 1.382–2(a)(1) for the definition of a loss corporation.

* * * * *

(4) *Successor corporation.* See § 1.382–2(a)(5) for the definition of *successor corporation.*

(5) *Predecessor corporation.* See § 1.382–2(a)(6) for the definitions of *predecessor corporation.*

* * * * *

Par. 4. Section 1.382–2 is amended as follows:

1. In the first sentence of paragraph (a)(1)(iii), remove the reference ''§ 1.382–2T(f)(1)(ii)'' and add ''paragraph (a)(1)(iv) of this section'' in its place.

2. In the first sentence of newly designated paragraph (a)(1)(iv), remove the reference ''§ 1.382–2(a)(1)(iii)'' and add '' paragraph (a)(1)(iii) of this section'' in its place.

3. In the first sentence of newly designated paragraph (a)(1)(iv), remove the reference ''§ 1.382–2(a)(1)(ii)'' and add ''paragraph (a)(1)(ii) of this section'' in its place.

4. In the last sentence of newly designated paragraph (a)(1)(iv), remove the reference ''paragraph (f)(1)(ii)'' and add ''paragraph (a)(1)(iv)'' in its place.

5. Paragraph (a)(1)(v) is added.

6. In the first sentence of paragraph (a)(3)(i), remove the reference ''paragraph (f)(18)'' and add ''paragraph (a)(3)(i) and § 1.382–2T(f)(18)(ii) and (iii)'' in its place.

7. In the last sentence of newly designated paragraph (a)(5), remove the reference ''paragraph (f)(4)'' and add ''paragraph (a)(5)'' in its place.

8. In the last sentence of newly designated paragraph (a)(6), remove the reference ''paragraph (f)(5)'' and add ''paragraph (a)(6)'' in its place.

The addition reads as follows:

§ 1.382–2 General rules for ownership change.

(a) * * *

(1) * * *

(v) *Application to other successor corporations.* This paragraph (a)(1) also applies, as the context may require, to successor corporations other than successors in section 381(a) transactions. For example, if a corporation receives assets from the loss corporation that have basis in excess of value, the recipient corporation's basis for the assets is determined, directly or indirectly, in whole or in part, by reference to the loss corporation's basis, and the amount by which basis exceeds value is material, the recipient corporation is a successor corporation subject to this paragraph (a)(1). This paragraph (a)(1)(v) applies to any testing date occurring on or after January 1, 1997.

* * * * *

Par. 5. Section 1.382–4 is amended by revising paragraph (b) to read as follows:

§ 1.382–4 Constructive ownership of stock.

* * * * *

(b) *Attribution from corporations, partnerships, estates and trusts.* (1) [Reserved].

(2) *Limitation.* Section 1.382–2T(h)(2)(i)(A) applies solely for purposes of determining whether a loss corporation has an ownership change.

* * * * *

§ 1.382–5 [Removed]

Par. 6. Section 1.382–5 is removed.

Par. 7. Section 1.382–5T is redesignated as § 1.382–5 and amended as follows:

1. The section heading is revised.

2. In paragraph (e), the reference ''§ 1.382–8T'' is removed and ''§ 1.382–8'' is added in its place.

The revision reads as follows:

§ 1.382–5 Section 382 limitation.

* * * * *

§ 1.382–8 [Removed]

Par. 8. Section 1.382–8 is removed.

Par. 9. Section 1.382–8T is redesignated as § 1.382–8 and amended as follows:

1. The section heading is revised.

2. Redesignate paragraphs (b) introductory text, (b)(1) and (b)(2) as paragraphs (b)(1) introductory text, (b)(1)(i) and (b)(1)(ii), respectively.

3. A paragraph heading for newly designated paragraph (b)(1) is added.

4. Paragraph (b)(2) is added.

5. The first three sentences of paragraph (f) are revised.

6. The graphics of paragraph (g) *Example 1*(a) are revised.

7. The graphics of paragraph (g) *Example 2*(a) are revised.

8. Paragraph (g) *Example 4* is amended as follows:

a. In the last sentence of paragraph (a), remove the reference ''§ 1.1502–92T(b)(1)(i)'' and add ''§ 1.1502–92(b)(1(i)'' in its place.

b. In paragraph (b)(2), remove the reference ''§ 1.1502–91T(c)'' and add ''§ 1.1502–91(c)'' in its place.

c. In paragraph (c), remove the reference ''§ 1.1502–93T'' and add ''§ 1.1502–93'' in its place.

9. In the fifth sentence of paragraph (h)(1), remove the reference ''§ 1.382–8T'' and add ''§ 1.382–8'' in its place.

10. Paragraph (i) is added.

The additions and revisions read as follows:

§ 1.382–8 Controlled groups.

* * * * *

(b) *Controlled group loss and controlled group with respect to a controlled group loss*—(1) *In general.* * * *

(2) *Presumption regarding net unrealized built-in loss.* For purposes of determining whether a net unrealized built-in loss of a loss corporation is attributable to a taxable year (the determination year) with respect to which the corporation is a component member of a controlled group, the built-in loss in a prior change date asset is deemed to be attributable to a period ending before the determination year. A prior change date asset is any asset held by the loss corporation at all times during the period beginning on the change date of its most recent ownership change after 1986 (the first change date), and ending on the first day of the determination year. The built-in loss in a prior change date asset is the amount by which the adjusted basis of the asset on the first change date exceeds the fair market value of the asset on that date. The principles of this paragraph (b)(2) also apply to items described in section 382(h)(6)(B).

* * * * *

(f) *Coordination between consolidated groups and controlled groups.* Some or all of the component members of a controlled group may also be members of a consolidated group, and a controlled group loss may be subject to a consolidated section 382 limitation or subgroup section 382 limitation determined under § 1.1502–93. Except as otherwise provided in this paragraph (f) and §§ 1.1502–91 through 1.1502–99, § 1.1502–93 applies instead of this section when both sections, by their terms, are otherwise applicable. This section is applicable and may require an adjustment to value if a member of a consolidated group, a loss group, or loss subgroup (as those terms are defined in §§ 1.1502–1(h) and 1.1502–91) is also a component member of a controlled group with respect to a controlled group loss. * * *

(g) * * *

Example 1. * * * (a) * * *

BILLING CODE 4830–01–U

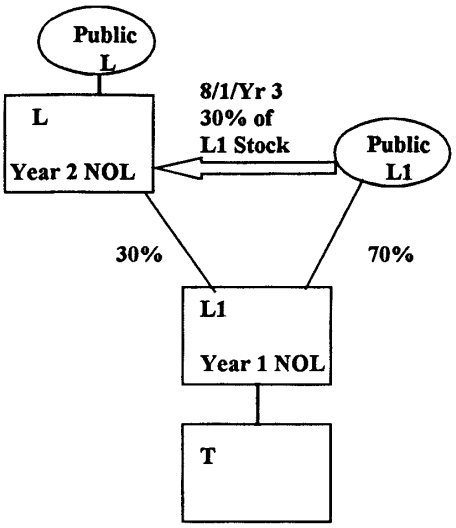
Public
L
L
Year 2 NOL
8/1/Yr 3
30% of
L1 Stock
Public
L1
30%
70%
L1
Year 1 NOL
T

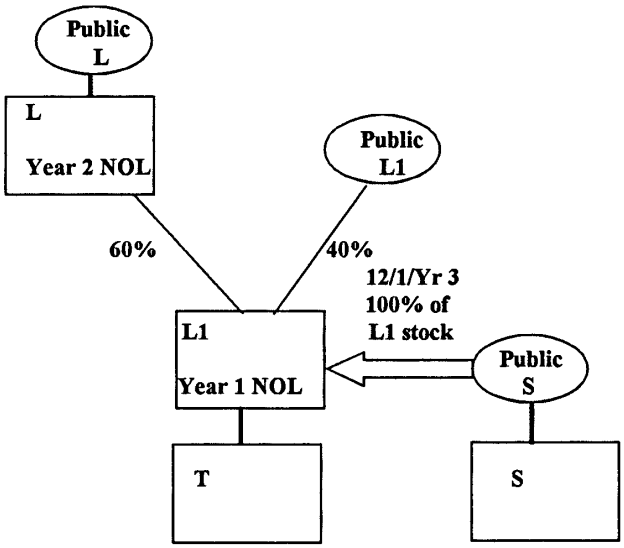
Public
L
L
Year 2 NOL
Public
L1
60%
40%
12/1/Yr 3
100% of
L1 stock
L1
Year 1 NOL
Public
S
T
S

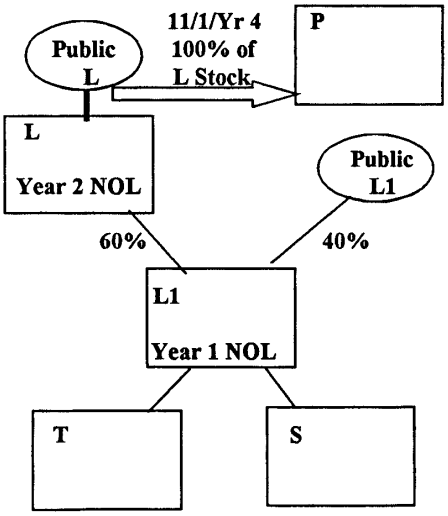
11/1/Yr 4
100% of
L Stock
P
Public
L
L
Year 2 NOL
Public
L1
60%
40%
L1
Year 1 NOL
T
S

* * * * *

Example 2. * * * (a) * * *

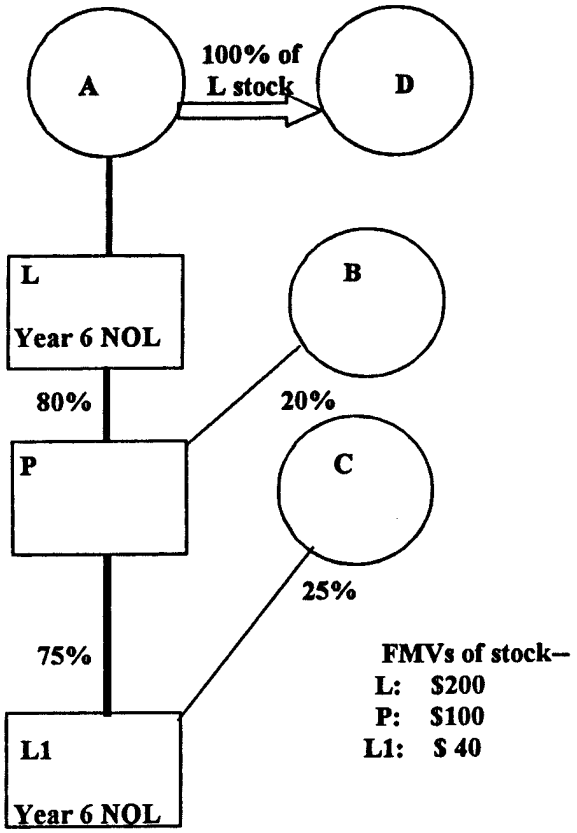

BILLING CODE 4830–01–C

* * * * *

(i) *References to former temporary regulations.* As the context requires, a reference in this section to § 1.382–8 includes a reference to § 1.382–8T in effect prior to June 25, 1999, as contained in 26 CFR part 1 revised as of April 1, 1999, a reference to §§ 1.1502–91, 1.1502–92, 1.1502–93, and §§ 1.1502–91 through 1.1502–99 includes a reference to §§ 1.1502–91A, 1.1502–92A, 1.1502–93A and §§ 1.1502–91A through 1.1502–99A.

* * * * *

PART 602—OMB CONTROL NUMBERS UNDER THE PAPERWORK REDUCTION ACT

Par. 10. The authority citation for part 602 continues to read as follows:

Authority: 26 U.S.C. 7805.

Par. 11. In § 602.101, paragraph (b) is amended in the table by removing the entry for 1.382–8T and adding an entry in numerical order to read as follows:

§ 602.101 OMB Control numbers.

* * * * *

(b) * * *

CFR part or section where identified and described	Current OMB control No.
* * * * *	
1.382–8	1545–1434
* * * * *	

John M. Dalrymple,

Acting Deputy Commissioner of Internal Revenue.

Approved: June 18, 1999.

Donald C. Lubick,

Assistant Secretary of the Treasury.

[FR Doc. 99–16163 Filed 6–25–99; 1:27 pm]

BILLING CODE 4830–01–U

federal register

Friday
July 2, 1999

Part IV

Department of Health and Human Services

Administration for Children and Families

Announcement of Second Round of Applications and Competitive Funding Under the Office of Community Services' Fiscal Year 1999 Assets for Independence (IDA) Demonstration Program Priority Area 1.0; Notice

DEPARTMENT OF HEALTH AND HUMAN SERVICES

Administration for Children and Families

[Program Announcement No. OCS–99–08]

Announcement of Second Round of Applications and Competitive Funding Under the Office of Community Services' Fiscal Year 1999, Assets for Independence (IDA) Demonstration Program, Priority Area 1.0

[This Announcement is Essentially the Same as the Announcement published January 27, 1999, as Modified by the Notice of Clarification published March 29, 1999]

AGENCY: Office of Community Services (OCS), ACF, DHHS.

ACTION: Announcement of second round of FY 1999 funding and availability of funds and request for second round of competitive applications under the Office of Community Services' Assets for Independence Demonstration Program.

SUMMARY: Initial screening of applications received pursuant to its Program Announcement of January 27, 1999 revealed serious deficiencies in a substantial number of applications, resulting in a fewer number of applications available for competitive review than originally anticipated. Consequently, after review of applications and award of grants under Priority Area 1.0 pursuant to the Announcement of January 27, there will remain FY 1999 funds available, and the Office of Community Services (OCS) is therefore announcing a second invitation to eligible entities to submit competitive grant applications for new demonstration projects under Priority Area 1.0 that will establish, support, and participate in the evaluation of Individual Development Accounts for lower income individuals and families. This announcement invites applications from new applicants as well as those entities who were notified that their original applications under round one were deficient, and from applicants who have been notified that their applications in the first round were not competitively selected for grant award, and who would like them reconsidered, or who choose to revise and resubmit their previous applications on the basis of reviewer comments. All potential applicants should be aware that it is the intention of the Office of Community Services to publish its FY 2000 Assets for Independence Program Announcement on or about August 16, 1999 with a closing date early in the year 2000.

DATES: To be considered for funding applications must be received by close of business on August 9, 1999. Applications received after that date will not be accepted for consideration. See Part VI of this Announcement for more information on submitting applications.

FOR FURTHER INFORMATION CONTACT: Richard Saul (202) 401–9341 or Sheldon Shalit (202) 401–4807, Department of Health and Human Services, Administration for Children and Families, Office of Community Services, 370 L'Enfant Promenade, SW, Washington, DC, 20447.

In addition, this Announcement is accessible on the OCS WEBSITE at ''http://www.acf.dhhs.gov/programs/ocs'' under ''funding opportunities''.

The Catalog of Federal Domestic Assistance (CFDA) number for this Program is ''93.602''. The title is Assets for Independence Demonstration Program (IDA Program).

SUPPLEMENTARY INFORMATION: This program announcement consists of nine parts plus appendices:

Part I: Announcement of Second Round of IDA Applications.

Part II: Summary of Announcement Modifications Pursuant to the Notice of Clarification Published March 29, 1999.

Part III: Background Information: legislative authority, program purpose, CFDA number, and definition of terms.

Part IV: Program Objectives and Requirements: program priority areas, eligible applicants, project and budget periods, funds availability and grant amounts, project eligibility and requirements, non-Federal matching funds requirements, preferences, multiple applications, treatment of program income, and partnership with financial institutions.

Part V: The Project Description, Program Proposal Elements and Review Criteria: project summary; the review process, project goals, application brevity; proposal elements and review criteria; and funding reconsideration.

Part VI: Application Procedures: application materials, application development/availability of forms, application submission, intergovernmental review, initial OCS screening, application consideration.

Part VII: Instructions for Completing Application Forms: SF424, SF424A, SF424B.

Part VIII: Contents of Application and Receipt Process: content and order of program application, acknowledgement of receipt

Part IX: Post Award Information and Reporting Requirements: notification of grant award, attendance at evaluation workshops, reporting requirements, audit requirements, prohibitions and requirements with regard to lobbying, applicable Federal regulations.

Appendices: Application forms and required attachments.

Paperwork Reduction Act of 1995

Under the Paperwork Reduction Act of 1995, Public Law 104–13, the Department is required to submit to OMB for review and approval any reporting and record keeping requirements in regulations, including Program Announcements. An agency may not conduct or sponsor, and a person is not required to respond to, a collection of information unless it displays a currently valid OMB control number. This Program Announcement does not contain information collection requirements beyond those approved for ACF grant announcements/applications under OMB Control Number OMB–0970–0139 (expires 10/31/2000).

Part I. Announcement of Second Round of IDA Applications

The Office of Community Services is hereby announcing a second round of Applications for Priority Area 1.0 of the Assets for Independence Demonstration (IDA) Program. Because of serious deficiencies in a substantial number of applications received pursuant to its Program Announcement of January 27, 1999, OCS is not able to award all of the funds available in that funding cycle. Deficient Applications from the first round have been returned to applicants, as have those not selected for funding in the competitive review of first round applications. This Announcement affords these applicants, as well as new applicants who have not previously submitted applications for this program, the opportunity to submit new or revised applications for consideration. Only new Applicants or Applicants submitting applications under the first round who have received notification of being deficient or of not being selected for funding in the first round are eligible to submit applications pursuant to this Announcement. Applications should be prepared and will be reviewed in accordance with the requirements, program elements, and review criteria of this Announcement, which are the same as those in the Program Announcement published January 27, 1999, as modified by the Notice of Clarification published March 29, 1999.

In every case, each application submitted pursuant to this Announcement must include a newly completed, signed, and dated SF 424, ''Application for Federal Assistance''.

Part II. Summary of Announcement Modifications Pursuant to the Notice of Clarification Published March 29, 1999

In the clarifications and guidance of March 29 OCS sought to respond to the issues raised by all of the interested

parties. The clarifications of issues of interest to applicants for the Assets for Independence Demonstration Program were set forth in that Notice and have been incorporated as modifications into this Program Announcement. As noted above, the full text of these modifications, as well as a series of informative Q's and A's, may be found on the OCS website. The modifications to the original Program Announcement, and which have been incorporated into this Announcement, may be summarized as follows:

A. Custodial Accounts. Applicants are advised that grantees will have the option of establishing Individual Development Accounts (IDA's) either as Trusts or as Custodial Accounts. [See Part III. D. (5) under Definitions, and PART IV.G.(3) Establishment of Individual Development Accounts.]

B. ''Non-Federal Share Agreements'' must include a schedule of deposits that will assure that there will be at all times in a Demonstration Project's Reserve Fund sufficient non-Federal matching contribution funds to equal the maximum amount pledged as matching contributions under the ''Savings Plan Agreements'' for all IDA's then open (which may be less than the $2000 for each account stated in the Program Announcement as originally published). [See PART VI. D. (6) and PART IV. I. Non-Federal Matching Funds Requirements.]

C. The ''Savings Plan Agreement'', required under PART IV Section G(3)(n) of the Program Announcement as part of the instrument creating the IDA, should, under item #2, set the matching contribution rate for the account up to a total of not more than $2000 in Federal grant funds, during the project period, rather than a total of all match funds as stated in the Program Announcement as originally published. It should also include a new item ı9 providing for withdrawal of savings if participant leaves the program. [See PART IV.G.(3)(n) Savings Plan Agreement.]

D. Project and Budget Periods. Applicants are advised that they may submit applications for project and budget periods of up to five years, but of at least three years' duration. [See PART IV.C. Project and Budget Periods under Priority Area 1.0]

E. Additional matching contributions. Applicants are advised that once the statutory requirement of equal matching contributions to IDA's from non-Federal sources and Federal grant funds is satisfied, additional matching contributions may be made from non-Federal sources or even from Federal sources such as TANF where the legislation or policies governing such programs so permit. In the case of TANF funds, such contributions would be limited to IDA's of TANF recipients. [See PART IV.G.(5) Deposits in Individual Development Accounts.]

F. Income Eligibility. The actual income limits from IRS tables for the Section 32 Earned Income Tax Credit are now set forth in PART IV.G.(a) Participant Eligibility.

G. Earned Income. The pertinent language from Section 911(d)(2) of the Internal Revenue Code, defining ''earned income'', is now set forth in PART IV.G.(5)(a) Matching Contributions.

Part III. Background Information

A. Legislative Authority

The Assets for Independence Demonstration Program (IDA Program) was established by the Assets for Independence Act (AFI Act), under Title IV of the Community Opportunities, Accountability, and Training and Educational Services Act of 1998 (Pub. L. 105–285, 42 USC 604 Note).

B. Program Purpose

The purpose of the program is, in the language of the AFI Act: to provide for the establishment of demonstration projects designed to determine:

(1) The social, civic, psychological, and economic effects of providing to individuals and families with limited means an incentive to accumulate assets by saving a portion of their earned income;

(2) The extent to which an asset-based policy that promotes saving for postsecondary education, homeownership, and microenterprise development may be used to enable individuals and families with limited means to increase their economic self-sufficiency; and

(3) The extent to which an asset-based policy stabilizes and improves families and the community in which the families live.

C. The Catalog of Federal Domestic Assistance (CFDA) Number for This Program is 93.602

D. Definition of Terms

For the purposes of this Announcement:

(1) AFI Act means the Assets for Independence Act (Title IV of the Community Opportunities, Accountability, and Training and Educational Services Act of 1998) which authorizes this program.

(2) Eligible Individual means an individual who meets the income and net worth requirements of the program as set forth in PART IV, Section G(2)(a).

(3) Emergency Withdrawal means a withdrawal of only those funds, or a portion of those funds, deposited by the eligible individual (Project Participant) in an Individual Development Account of such Individual. Such withdrawal must be approved by the Project Grantee, must be made for an allowable purpose as defined in the AFI Act and under the Project Eligibility Requirements set forth in PART IV of this Announcement, and must be repaid by the individual Project Participant within 12 months of the withdrawal. [See PART IV, Section G(6)(b)]

(4) Household means all individuals who share use of a dwelling unit as primary quarters for living and eating separate from other individuals.

(5) Individual Development Account means a trust or a custodial account created or organized in the United States exclusively for the purpose of paying the qualified expenses of an eligible individual, or enabling the eligible individual to make an emergency withdrawal, but only if the written governing instrument creating the trust or custodial account meets the requirements of the AFI Act and of the Project Eligibility and Requirements set forth in this Announcement. [See PART IV, Section G(3) and (4).

(6) Net Worth of a Household means the aggregate market value of all assets that are owned in whole or in part by any member of the household, exclusive of the primary dwelling unit and one motor vehicle owned by a member of the household, minus the obligations or debts of any member of the household.

(7) Project Grantee means a Qualified Entity as defined in paragraph (10) below, which receives a grant pursuant to this Announcement.

(8) Project Participant means an Eligible Individual as defined in paragraph (2) above who is selected to participate in a demonstration project by a qualified entity.

(9) Project Year means, with respect to a funded demonstration project, any of the 5 consecutive 12-month periods beginning on the date the project is originally awarded a grant by ACF.

(10) Qualified Entity means an entity eligible to apply for and operate an assets for independence demonstration project, under Priority Area 1.0, as one or more not-for-profit 501(c)(3) tax exempt organizations, or a State or local government agency, or a tribal government, submitting an application jointly with such a not-for-profit organization. States eligible to apply under Priority Area 2.0 are deemed to be Qualified Entities.

(11) Qualified Expenses means one or more of the expenses for which payment

may be made from an individual development account by a project grantee on behalf of the eligible individual in whose name the account is held, and is limited to expenses of (A) post-secondary education, (B) first home purchase, and/or (C) business capitalization, as defined below:

(A) Post-Secondary Educational Expenses means post-secondary educational expenses paid from an individual development account directly to an eligible educational institution, and includes:

(i) Tuition and Fees required for the enrollment or attendance of a student at an eligible educational institution.

(ii) Fees, Books, Supplies, and Equipment required for courses of instruction at an eligible educational institution.

(iii) Eligible Educational Institution means the following:

(I) Institution of Higher Education.—An institution described in Section 101 or 102 of the Higher Education Act of 1965.

(II) Post-Secondary Vocational Education School.—An area vocational education school (as defined in subparagraph (C) or (D) of section 521(4) of the Carl D. Perkins Vocational and Applied Technology Education Act (20 U.S.C. 2471(4)) which is in any State (as defined in section 521(33) of such Act) as such sections are in effect on the date of enactment of this title.

(B) First-Home Purchase means qualified acquisition costs with respect to a principal residence for a qualified first-time homebuyer, if paid from an individual development account directly to the persons to whom the amounts are due. Within this definition:

(i) Principal Residence means a main residence, the qualified acquisition costs of which do not exceed 100 percent of the average purchase price applicable to a comparable residence in the area.

(ii) Qualified Acquisition Costs means the cost of acquiring, constructing, or reconstructing a residence, including usual or reasonable settlement, financing, or other closing costs.

(iii) Qualified First-Time Homebuyer means an individual participating in the project involved (and, if married, the individual's spouse) who has no present ownership interest in a principal residence during the 3-year period ending on the date on which a binding contract is entered into for purchase of the principal residence to which this subparagraph applies.

(C) Business Capitalization means amounts paid from an individual development account directly to a business capitalization account that is established in a Qualified Financial Institution and is restricted to use solely for qualified business capitalization expenses of the eligible individual in whose name the account is held. Within this definition:

(i) Qualified Business Capitalization Expenses means qualified expenditures for the capitalization of a qualified business pursuant to a qualified plan.

(ii) Qualified Expenditures means expenditures included in a qualified plan, including but not limited to capital, plant, equipment, working capital, and inventory expenses.

(iii) Qualified Business means any business that does not contravene any law or public policy (as determined by the Secretary).

(iv) Qualified Plan means a business plan, or a plan to use a business asset purchased, which—

(I) Is approved by a financial institution, a microenterprise development organization, or a nonprofit loan fund having demonstrated fiduciary integrity;

(II) Includes a description of services or goods to be sold, a marketing plan, and projected financial statements; and

(III) May require the eligible individual to obtain the assistance of an experienced entrepreneurial advisor.

(12) Qualified Financial Institution means a Federally insured Financial Institution, or a State insured Financial Institution if no Federally insured Financial Institution is available.

(13) Qualified Savings of the Individual for the Period means the aggregate of the amounts contributed by an eligible individual to the individual development account of the individual during the period.

(14) Secretary means the Secretary of Health and Human Services, acting through the Director of the Office of Community Services.

(15) Tribal Government means a tribal organization, as defined in section 4 of the Indian Self-Determination and Education Assistance Act (24 U.S.C. 450b) or a Native Hawaiian organization, as defined in section 9212 of the Native Hawaiian Education Act (20 U.S.C. 7912).

(16) Trust Agreement means the instrument by which an Individual Development Account is established in the partnering Financial Institution as required in PART II Section G(3).

(17) Trustee means the Qualified Financial Institution responsible for management of the Individual Development Account pursuant to the Trust Agreement.

Part IV. Program Objectives and Requirements

A. Program Priority Areas

Of the two Program Priority Areas under this program, only applications under Priority Area 1.0, are invited by this Announcement, from Qualified Entities as described below and in Section G.

B. Eligible Applicants

Eligible applicants for the Assets for Independence Demonstration Program Priority Area 1.0 are one or more not-for-profit 501(c)(3) tax exempt organizations, or a State or local government agency, or a tribal government, submitting an application jointly with such a not-for-profit organization. Applicants must provide documentation of their tax exempt status. The applicant can accomplish this by providing a copy of the applicant's listing in the Internal Revenue Service's (IRS) most recent list of tax-exempt organizations described in Section 501(c)(3) of the IRS code or by providing a copy of their currently valid IRS tax exemption certificate. Failure to provide evidence of Section 501(c)(3) tax exempt status will result in rejection of the application.

C. Project and Budget Periods Under Priority Area 1.0

This announcement is inviting applications under Priority Area 1.0 for project and budget periods of up to five (5) years (but at least three (3) years). Grant actions, on a competitive basis, will award funds for the full project and budget periods of three to five years' duration. As noted below in Section E., subject to the availability of funds, grantees may be offered the opportunity to compete for supplementary funding in later years during the project.

Note: Applicants should be aware that OCS funds awarded pursuant to this Announcement will be from fiscal year (FY) 1999 funds and may not be expended after the end of a five year Project/Budget Period to support administration of the project or matching contributions to Individual Development Accounts which may be open at that time.

D. Project and Budget Periods for Projects Under Priority Area 2.0

(Not applicable)

E. Funds Availability and Grant Amounts Under Priority Area 1.0

Under this Program Announcement approximately $3.5 million in Fiscal Year 1999 funds is available under Priority Area 1.0 for funding commitments to approximately 14 projects, not to exceed $500,000 and

averaging a total of approximately $250,000 for the three- to five-year project. Applicants are reminded that grant awards are limited to the amount of committed non-Federal cash matching contributions, and are urged to make realistic projections of project needs over the duration of the project and propose project budgets accordingly. Draw-down of grant funds over the three- to five-year budget period will be permitted in amounts that will match non-Federal deposits into the Project Reserve Fund. (See Section I., below) As noted above, subject to availability of funds and the progress of individual demonstration projects, grantees may be offered the opportunity to compete for supplementary funding in later years during the project, if there were a determination that this would be in the best interest of the government.

F. Funds Availability and Grant Amounts Under Priority Area 2.0

(Not applicable)

G. Project Eligibility and Requirements Under Priority Area 1.0

To be eligible for funding under Priority Area 1.0, projects must be sponsored and managed by Qualified Entities and must meet the following requirements:

(1) Reserve Fund. A grantee, other than a State or local government agency or tribal government, must establish a Reserve Fund and maintain it in accordance with accounting regulations prescribed by the Secretary. (Note: Such regulations will be issued prior to grant awards and made available to grantees at the time of the award.)

(a) Amounts in the Reserve Fund. As soon after receipt as is practicable, such grantees shall deposit in such Reserve Fund the non-Federal matching contributions received pursuant to the ''Non-Federal Share Agreement'' or Agreements reached with the provider(s) of non-Federal matching contributions. Once such non-Federal funds are deposited in the Reserve Fund, grantees may draw down OCS grant funds in amounts equal to such deposits. Similarly, as soon after receipt as practical, such grantees shall deposit the income received from any investment made of those funds (see below).

(b) Use of Amounts in the Reserve Fund. Grantees shall use the amounts in such Reserve Fund as follows:

(A) At least 90.5% of the Federal grant funds in the Reserve Fund shall be used as matching contributions to Individual Development Accounts for Project Participants, matched by non-Federal contributions in accordance with Paragraph (5), below.

(B) At least 2% but no more than 9.5% of the Federal grant funds shall be used toward the expense of collecting and providing to the research organization evaluating the demonstration project the data and information required for the evaluation.

(C) Up to 7.5% of the Federal grant funds may be used for administration of the demonstration project and toward expenses of assisting project participants to obtain the skills (including economic literacy, budgeting, and business management skills), training, and information necessary to achieve economic self-sufficiency through activities requiring qualified expenses.

(D) Up to 9.5% of the required matching non-Federal funds may be used for expenses outlined in Paragraphs (B) and (C), above, or other project-related expenses as agreed by the Applicant and the providing entity.

Note: If a grantee mobilizes matching non-Federal contributions in excess of the required 100 percent match, such non-Federal funds may be used however the grantee and provider of the funds may agree.

(c) Authority to Invest Funds. A grantee shall invest the amounts in its Reserve Fund that are not immediately needed for payment under paragraph (b), in a manner that provides an appropriate balance between return, liquidity, and risk, and in accordance with Guidelines which will be issued by the Secretary prior to making of grant awards and provided to grantees at the time of grant award.

(d) Use of Investment Income. Income generated from investment of Reserve Fund monies that are not allocated to existing Individual Development Accounts may be added by grantees to the funds committed to program administration, participant support, or evaluation data collection. As noted in Paragraph M, below, once funds have been committed as matching contributions to Individual Development Accounts, then any income subsequently generated by such funds must be deposited/credited to the credit of such accounts.

Note: No part of such income is to be considered as a Federal funds contribution subject to the $2000/$4000 limitations under Paragraph (5)(b), below.

(e) Joint Project Administration. If two or more qualified entities are jointly administering a project, none shall use more than its proportional share for the purposes described in subparagraphs (B) and (C), of paragraph (b).

(2) Eligibility and Selection of Project Participants.

(a) Participant Eligibility. Eligibility for participation in the demonstration projects is limited to individuals who are members of households eligible for assistance under TANF or of households whose adjusted gross income does not exceed the earned income amount described in Section 32 of the Internal Revenue Code of 1986 (taking into account the size of the household), and whose net worth as of the end of the calendar year preceding the determination of eligibility does not exceed $10,000, excluding the primary dwelling unit and one motor vehicle owned by a member of the household.

[**Note:** The most recent EITC Earned Income Guidelines which set the limits on annual income for eligibility in the IDA Program are as follows:

—For a household without a child: $10,030
—For a household with one child: $26,473
—For a household with more than one child: $30,095

Applicants are reminded that there is also an assets test for eligibility in the program.]

(b) Participant Selection. In keeping with the statutory preference in Section 405(d)(3) of the AFI Act for applications that target individuals from neighborhoods or communities that experience high rates of poverty or unemployment, grantees under Priority Area 1.0, in their selection of Project Participants, may restrict participation in such neighborhoods or communities targeted by their demonstration projects to individuals and households with lower incomes and net worth than set forth above, provided that they shall nonetheless select individuals that they determine to be best suited to participate in the demonstration project.

(3) Establishment of Individual Development Accounts. Grantees must create, through written governing instruments, either (a) Trusts, under this paragraph, or (b) Custodial Accounts described in Paragraph (4) below, which will be Individual Development Accounts on behalf of Project Participants. Trustees of Trusts must be Qualified Financial Institutions. Custodians of Custodial Accounts may be Qualified Financial Institutions, other insured financial institutions satisfactory to the Secretary, or Demonstration Project Grantees. In every case the participating insured financial institution and the Demonstration Project Grantee shall be parties to the written governing instruments creating the Trust or Custodial Account, which must contain the following provisions:

(a) No contribution will be accepted unless in cash or by check.

Note: In accordance with U.S. Treasury Regulations and accepted commercial practice, electronic transfer of funds will be considered a cash payment for purposes of this Announcement.

(b) The assets of the trust will be invested in accordance with the direction of the Project Participant after consultation with the grantee and pursuant to the guidelines of the Secretary (which will be issued prior to the making of grant awards and made available to grantees at the time of grant award).

(c) The assets of the trust will not be commingled with other property except in a common trust fund or common investment fund.

(d) In the event of the death of the Project Participant, any balance remaining in the trust shall be distributed within 30 days of the date of death to another Individual Development Account established for the benefit of an eligible individual as directed by the Participant in the Savings Plan Agreement under sub-paragraph (h), below; *provided*, that the Participant may at their option direct the disposition of any funds in the trust which were deposited in the trust by the Participant.

(e) Except in the case of the death of the Project Participant, amounts in the trust attributable to deposits by the grantee from grant funds and matching non-federal contributions, and any interest thereon, may be paid, withdrawn or distributed out of the trust only for the purpose of paying qualified expenses of the Project Participant (i.e. for post-secondary education expenses, first-home purchase, or business capitalization. See PART III Section D(11))

(f) The procedures governing the withdrawal of funds from the Individual Development Account, for both Qualified Expenses and Emergency Withdrawals, which comply with the provisions of Paragraph (6) Withdrawals from Individual Development Accounts, below.

(g) A provision, in accordance with the direction of the Project Participant, for the distribution within 30 days of any balance in the trust on the day following the death of such Participant, to another individual development account established for the benefit of an eligible individual. [Note that this will mean that each Project Participant must provide such direction at the time the Individual Development Account is established. Provision should be made by grantees for modification of such directions during the course of the project, in the event of changing circumstances.]

(h) A ''Savings Plan Agreement'' between the grantee and the Project Participant, which should include: (1) savings goals (including a proposed schedule of savings deposits by the Participant from earned income, which may be for a period of less than five years); (2) the rate at which participant savings will be matched (from one dollar to eight dollars for each dollar in savings deposited by Participant, up to a total of $2000 in Federal grant funds matched by an equal amount in non-Federal contributions during the project period); (3) the proposed qualified expense for which the Account is maintained, (4) any training or education related to the qualified expense which the Grantee agrees to provide and of which the Participant agrees to partake, (5) contingency plans in the event that the Participant exceeds or fails to meet projected savings goals or schedules, (6) any agreement as to investments of assets described in subparagraph (c), above, (7) provision for disposition of the funds in the trust (account) in the event of the Participant's death (see sub-Paragraph (d), above; (8) provision for amendment of the Agreement with the concurrence of both Grantee and Participant; and (9) a provision that should the Project Participant decide to leave the program, the grantee agrees that it will co-sign a withdrawal of the Participant's savings plus any income accrued thereon, with the understanding that the Participant thereby loses any right to receive matching contributions.

(4) Custodial Accounts. Notwithstanding the provisions of Paragraph (3), above, Grantees may, in the alternative, create, through written governing instruments, Custodial Accounts which shall be Individual Development Accounts on behalf of Project Participants, except that they will not be trusts. As in the case of trusts established under paragraph (3), the written governing instruments of the accounts must contain the requirements outlined in subparagraphs (a) through (h) of that paragraph, with the following exceptions. Whereas trustees of the trusts created under Paragraph (3) must be Qualified Financial Institutions, the assets of the custodial account may be held by a bank or another ''person'' (or institution) who demonstrates to the satisfaction of the Secretary that the manner in which the account will be administered will be consistent with the provisions of the AFIA, and that the IDA's will be created and maintained as described in paragraph (3) and Section 404(5)(A) of the AFIA. In addition, in the case of a custodial account treated as a trust by reason of this paragraph, the custodian of such account may be the Project Grantee, provided that it can assure compliance with the requirements of Paragraph (3) above, and Section 404(5)(A) of the AFIA. These arrangements would place the ''custodial'' responsibilities with the grantee, and relieve financial institutions of trustee obligations. The Secretary has determined that the assets of any such accounts must be held in an insured financial institution and be subject to the provisions of Paragraph M, below, pertaining to agreements with applicants/grantees.

(5) Deposits in Individual Development Accounts.

(a) Matching Contributions. Not less than once every three months during the demonstration project grantees will make deposits into Individual Development Accounts, or into a parallel account maintained by the grantee, as matching contributions to deposits from earned income made by Project Participants during the period since the previous deposit.

Note: Deposits made by Project Participants shall be deemed to have been made from earned income so long as the Participant's earned income (as defined in Section 911(d)(2) of the Internal Revenue Code of 1986) during the period since the Participant's previous deposit in the account is greater than the amount of the current deposit. Section 911(d)(2) provides, in relevant part, ''the term 'earned income' means wages, salaries, or professional fees, and other amounts received as compensation for personal services actually rendered''. Matching contributions must be made to IDA's in equal amounts from Federal grant funds and the non-Federal public and private funds committed to the project as matching contributions, as described in Sections 405(c)(4) and 406(b)(1) of the AFI Act. Such matching contribution deposits by grantees may be from $0.50 to $4 in non-Federal funds and an equal amount in Federal grant funds, for each dollar of earned income deposited in the account by the Project Participant in whose name the account is established. Once such equal matching contribution deposits are made, grantees may make additional matching contributions to IDA's from other non-Federal sources, or other Federal sources such as TANF, where the legislation or policies governing such programs so permit. At the time matching contribution deposits are made, the grantee will also deposit into the Individual Development Account (or the parallel account) any interest or income that has accrued since the previous deposit on amounts previously deposited in or credited to that account.

(b) Limitations on Matching Contributions. Over the course of the five year demonstration, not more than $2,000 in Federal grant funds shall be provided through matching contributions to any one individual; and

not more than $4,000 shall be provided to any one household.

(6) Withdrawals from Individual Development Accounts.

(a) Limitations. No earlier than six months after the initial deposit by a Project Participant in an Individual Development Account, funds may be withdrawn from such account, but only upon written approval of the Project Participant and of a responsible official of the project grantee, and only for one or more Qualified Expenses (as defined in Part III) or for an Emergency Withdrawal.

(b) Emergency Withdrawals. An Emergency Withdrawal may only be of those funds, or a portion of those funds, deposited in the account by the Project Participant, and for the following purposes:

(i) Expenses for medical care or necessary to obtain medical care for the Project Participant or a spouse or dependent of the Participant;

(ii) Payments necessary to prevent eviction of the Project Participant from, or foreclosure on the mortgage for, the principal residence of the Participant;

(iii) Payments necessary to enable the Project Participant to meet necessary living expenses (food, clothing, shelter—including utilities and heating fuel) following loss of employment.

(c) Reimbursement of Emergency Withdrawals. A Project Participant shall reimburse an Individual Development Account for any funds withdrawn from the account for an Emergency Withdrawal, not later than 12 months after the date of the withdrawal. If the Participant fails to make the reimbursement, the Project Grantee must transfer the funds deposited into the account or a parallel account from Federal and non-Federal matching contributions, and any income generated thereby, back to the Reserve Fund of the grantee, and use the funds to benefit other individuals participating in the demonstration project involved. Any remaining funds deposited by the Project Participant (plus any income generated thereby) shall be returned to such Project Participant.

(d) Transfers to Individual Development Accounts of Family Members. At the request of a Project Participant, and with the written approval of a responsible official of the grantee, amounts may be paid from an individual development account directly into another such account established for the benefit of an eligible individual who is—

(i) The Participant's spouse, or

(ii) Any dependent of the Participant with respect to whom the Participant is allowed a deduction under section 151 of the Internal Revenue Code of 1986.

H. Project Eligibility and Requirements Under Priority Area 2.0

(Not applicable)

I. Non-Federal Matching Funds Requirements

Grantees must provide at least one hundred percent of the OCS grant amount in cash non-Federal share for deposit to the Reserve Fund as matching contribution. Public sector resources that can be counted toward the minimum required match include funds from State and local governments, and funds from various block grants allocated to the States by the Federal Government providing the authorizing legislation for these grants permits such use. (Note, for example, that Community Development Block Grant (CDBG) funds may be counted as matching funds; whereas CSBG FUNDS, for example, may not.) To be considered for funding an Application must include a copy of a ''Non-Federal Share Agreement'' or Agreements in writing executed with the entity or entities providing the required non-Federal matching contributions, on letterhead of the entity and signed by a person authorized to make a commitment on behalf of the entity. Such Agreement(s) must include: (1) a commitment to provide the non-Federal funds contingent only on the grant award; (2) a schedule of deposits to the projects's Reserve Fund of at least ten percent of the total committed for the entire project at the start of each of the Project years, plus any additional amounts needed to assure that there are at all times in the Reserve Fund non-Federal matching contribution funds equal to the total amounts of such funds pledged as maximum matching contributions under the ''Savings Plan Agreements'' for all Individual Development Accounts then open and being maintained by the grantee as part of the demonstration project; and (3) a statement that up to 9.5 percent of the required non-Federal matching contribution funds it provides may be allocated from the Reserve Fund to the support of project administration, Participant support, data collection or other project-related expenses. (See Section G(1)(b), above, and PART VI, Section D(5)) Grantees are encouraged to mobilize additional resources, which may be cash or in-kind contributions, Federal or non-Federal, for support of project administration and assistance to Project Participants in obtaining skills, knowledge, and needed support services. (See Part V, Element IV).

Note: If a grantee mobilizes matching non-Federal contributions in excess of the required 100 percent match, such non-Federal funds may be used however the grantee and provider of the funds may agree. Grantees will be held accountable for commitments of such excess matching funds and additional resources proposed or pledged as part of an approved application even if over the amount of the required match.

J. Preferences

In accordance with the provisions of the AFI Act, in considering an application to conduct a demonstration project under Priority Area 1.0, OCS will give preference to an application that

(1) Demonstrates the willingness and ability of the applicant to select individuals for participation in the project who are predominantly from households in which a child (or children) is living with the child's biological or adoptive mother or father, or with the child's legal guardians;

(2) Provides a commitment of non-Federal funds with a proportionately greater amount of such funds committed from private sector sources; and

(3) Targets individuals residing within one or more relatively well-defined neighborhoods or communities (including rural communities, public housing developments, Empowerment Zones and Enterprise Communities) that experience high rates of poverty or unemployment.

K. Multiple Applications

Qualified Entities may submit more than one application for different demonstration projects, but no more than one such application will be funded to the same Qualified Entity.

L. Treatment of Program Income

As noted in Section G(1)(d), above, income generated from investment of unallocated funds in the Reserve Fund may be added to the funds already committed from the Reserve Fund to program administration, participant support, or evaluation data collection. However, once funds have been committed as matching contributions to Individual Development Accounts, then any income generated by such funds must be deposited proportionately to the credit of such accounts.

Note: No part of such income is to be considered as a Federal funds contribution subject to the $2000/$4000 limitations under Section G(5)(b), above. (See also Sections G(1)(d) and G(5)(a), above).

M. Agreements With Partnering Financial Institutions

All applicants under Priority Area 1.0 must enter into agreements with one or

more insured Financial Institutions, in collaboration with which Reserve Funds and Individual Development Accounts will be established and maintained. To be considered for funding, an Application under Priority Area 1.0 must include a copy of an Agreement or Agreements with one or more partnering Qualified Financial Institutions (or in the case of Individual Development Accounts established as Custodial Accounts, an insured financial institution satisfactory to the Secretary), which state(s) that the accounting procedures to be followed in account management will conform to Guidelines established by the Secretary (which will be issued prior to grant awards and made available to grantees at time of award), and under which the partnering Financial Institution agrees to provide data and reports as requested by the applicant. In the case of IDA's established as Trusts under Section G(3), above, the partnering financial institution must be a Qualified Financial Institution as defined in PART III Section D(12). In the case of IDA's established as Custodial Accounts, the partnering financial institution must be insured and must meet the requirements of Section G(4), above, to the satisfaction of the Secretary. The Agreement may also include other services to be provided by the partnering Financial Institution that could strengthen the program, such as Financial Education Seminars, favorable pricing or matching contributions provided by the Financial Institution, and assistance in recruitment of Project Participants.

Part V. The Project Description, Program Proposal Elements and Review Criteria

The project description provides a major means by which an application is evaluated and ranked to compete with other applications for available assistance. The project description should be concise and complete and should address the activity for which Federal funds are being requested. Supporting documents should be included where they can present information clearly and succinctly. Cross-referencing should be used rather than repetition. OCS is particularly interested in specific factual information and statements of measurable goals in quantitative terms. Project descriptions are evaluated on the basis of substance, not length. Extensive exhibits are not required. (Supporting information concerning activities that will not be directly funded by the grant or information that does not directly pertain to an integral part of the grant funded activity should be placed in an appendix.) Pages should be numbered and a table of contents should be included for easy reference.

A. Project Summary

Applicants should provide a Project Summary of not more than one page which should be page 1 of the Project Narrative/Description.

B. Project Goals, Application Brevity

The ultimate goals of the projects to be funded under the Assets for Independence Demonstration Program are: (1) to achieve, through project activities and interventions, the creation of asset accumulation opportunities for recipients of Temporary Assistance for Needy Families (TANF) and other eligible individuals and families that can lead to economic self-sufficiency of members of the communities served through activities requiring one or more qualified expenses; (2) to support and make possible the evaluation of the effectiveness of these interventions and of the project design through which they were implemented; and (3) thus to make possible the replication of successful programs. As noted here, OCS intends to make the awards of all the above grants on the basis of brief, concise narrative project descriptions. The elements and format of these project descriptions, along with the review criteria that will be used to evaluate them, will be outlined in this Part.

In order to simplify the application preparation and review process, OCS seeks to keep grant proposals cogent and brief. Applications with project narratives (excluding appendices) of more than 30 letter-sized pages of 12 c.p.i. type or equivalent on a single side will not be reviewed for funding. Applicants should prepare and assemble their project description using the following outline of required project elements. They should, furthermore, build their project concept, plans, and application description upon the guidelines set forth for each of the project elements.

C. Proposal Elements and Review Criteria for Applications Under Priority Area 1.0

Applications which pass the initial screening will be assessed and scored by reviewers. Each reviewer will give a numerical score for each application reviewed. These numerical scores will be supported by explanatory statements on a formal rating form describing major strengths and weaknesses under each applicable criterion published in the Announcement. Scoring will be based on a total of 100 points.

The competitive review of proposals will be based on the degree to which applicants:

(1) Adhere to the requirements in Part IV and incorporate each of the Elements and Sub-Elements below into their proposals, so as to:

(2) Describe convincingly a project that will develop new asset accumulation opportunities for TANF recipients and other eligible individuals and families that can lead to a transition from dependency to economic self-sufficiency through activities requiring one or more qualified expenses; and

(3) Provide for the collection of relevant data to support the testing and evaluation of the project design, implementation, and outcomes so as to make possible replication of a successful program.

For each of the Project Elements or Sub-Elements below there is at the end of the discussion a suggested number of pages to be devoted to the particular element or sub-element. These are suggestions only; but the applicant must remember that the overall Project Narrative must not be longer than 30 pages.

Element I. Organizational Experience and Administrative Capability. (Total Weight of 0 to 20 points)

Sub-Element I(a) Experience and Staffing. (Weight of 0–10 points)

The applicant should cite its capability and relevant experience in developing and operating programs which deal with poverty problems similar to those to be addressed by the proposed project, including the provision of supportive services to TANF recipients and other low income individuals and families seeking to achieve economic stability and self-sufficiency, as well as with evaluations and data collection. Applications should identify applicant agency executive leadership in this section and briefly describe their involvement in the proposed project and provide assurance of their commitment to its successful implementation. The application should note and justify the priority that this project will have within the agency including the facilities and resources that it has available to carry it out.

Finally, the application must identify the two or three individual staff persons who will have the most responsibility for managing the project, coordinating services and activities for participants and partners, and for achieving performance targets. The focus should be on the qualifications, experience, capacity and commitment to the program of the key staff persons who will administer and implement the project. The person identified as Project

Director should have supervisory experience, experience in working with financial institutions and budget related problems of the poor, and experience with the target population. Because this is a demonstration project within an already-established agency, OCS expects that the key staff person(s) would be identified, if not hired.

It is suggested that applicants use no more than 3 pages for this sub-Element, not counting actual resumes or position descriptions, which should be included in an Appendix to the proposal.

Sub-Element I(b) Ability to Assist Participants. (Weight of 0–10 points)

The experience and ability of the applicant in recruiting, educating, and assisting project participants to increase their economic independence and general well-being through the development of assets. The application should cite the organization's experience in collaborative programming and operations which involve financial institutions and financial planning, budget counseling, educational guidance, preparation for home ownership, and self-employment training. The application should also cite the roles, responsibilities, and experience of any other organizations that will be collaborating with the Applicant to assist and support Project Participants in the pursuit of their goals under the project.

It is suggested that applicants use no more than 3 pages for this sub-Element. Any supportive materials or reports should be included in the Appendix to the proposal.

Element II. Sufficiency of the Project Theory, Design, and Plan (Total Weight of 0–40 points)

The degree to which the project described in the application appears likely to aid project participants in achieving economic self-sufficiency through activities requiring one or more qualified expenses.

OCS seeks to learn from the application why and how the project as proposed is expected to establish the creation of new opportunities for asset accumulation by eligible individuals and families that can lead to significant improvements in individual and family self-sufficiency through activities requiring one or more qualified expenses: for post-secondary education, home ownership, and/or qualified business capitalization.

Applicants are urged to design and present their project in terms of a conceptual cause-effect framework that makes clear the relationship between what the project plans to do and the results it expects to achieve.

Sub-Element II(a). Description of Target Population, Analysis of Need, and Project Assumptions. (Weight of 0–15 points)

The project design or plan should begin with identifying the underlying assumptions about the program. These are the beliefs on which the proposed program is built. They should begin with assumptions about the strengths and needs of the population to be served; about how the accumulation of assets will enable project participants to build on those strengths in their quest to achieve self-sufficiency; about what anticipated needs of the participants could be barriers to that achievement, and why and how the services or interventions proposed by the applicant are appropriate and will meet those needs and remove such barriers; and about the impact the proposed interventions will have on the project participants.

In other words, the underlying assumptions of the program are the applicant's analysis of the participant strengths and potential to be supported and their needs and problems to be addressed by the project, and the applicant's theory of how its proposed interventions will address those strengths and needs to achieve the desired result. Thus a strong application is based upon a clear description of the needs and problems to be addressed and a persuasive understanding of the causes of those problems.

In this sub-element of the proposal the applicant must precisely identify the target population to be served. The geographic area to be impacted should then be briefly described, citing the percentage of residents who are low-income individuals and TANF recipients, as well as the unemployment rate, and other data that are relevant to the project design.

The application should include an analysis of the identified personal barriers to employment, job retention and greater self-sufficiency faced by the population to be targeted by the project. (These might include such problems as illiteracy, substance abuse, family violence, lack of skills training, health or medical problems, need for childcare, lack of suitable clothing or equipment, or poor self-image.) The application should also include an analysis of the identified community systemic barriers which the project will seek to overcome. These might include lack of public transportation; lack of markets; unavailability of financing, insurance or bonding; inadequate social services (employment service, child care, job training); high incidence of crime; inadequate health care; or environmental hazards. Applicants should be sure not to overlook the personal and family services and support needed by project participants after they are on the job which will enhance job retention and advancement, and help to assure that benefits attainable through asset accumulation are not wasted by crises beyond the participants' control.

Note: In accordance with the legislative preferences set forth in Part IV Section J, above, the maximum score for this sub-Element in the review of applications under Priority Area 1.0 will only be given to applications which

(1) Demonstrate the willingness and ability of the applicant to select individuals for participation in the project who are predominantly from households in which a child (or children) is living with the child's biological or adoptive mother or father, or with the child's legal guardians; and

(2) Target individuals residing within one or more relatively well-defined neighborhoods or communities (including rural communities, public housing developments, Empowerment Zones and Enterprise Communities) that experience high rates of poverty or unemployment.

Each of these preferences will be valued at 2 points in the proposal review, so that the absence of one will reduce the review score for the sub-Element by 2 points; the absence of both will reduce the review score by 4 points.

It is suggested that applicants use no more than 5 pages for this Sub-Element.

Sub-Element II(b). Project Approach and Design: Interventions, Outcomes, and Goals. (Weight of 0–20 points)

The Application should outline a plan of action which describes the scope and detail of how the proposed work will be accomplished and result in outcomes which will build on the strengths of the Program Participants and assist them to overcome the identified personal and systemic barriers to achieving self-sufficiency. In other words, what will the project staff do with the resources provided to the project and how will what they do (interventions) assist project participants to accumulate assets in Individual Development Accounts and use those assets for qualified expenses in a manner that will lead them to self-sufficiency?

In this sub-element the applicant should discuss all of the planned activities and interventions and should explain the reasons for taking the approaches proposed.

The application should include here a brief discussion of the following aspects of the proposed project:

(1) Plans for recruitment of participants into the program;

(2) Criteria for selection of participants from among the eligible target population;

(3) The proposed rate(s) for matching contributions to Individual Development Accounts. (If more than one rate project-wide is proposed, the rationale should be provided);

(4) The provisions of the ''Savings Plan Agreements'' proposed to be made with Project Participants and included in the Trust Agreements establishing Individual Development Accounts. (A sample Savings Plan Agreement may be provided to satisfy this criterion.) [See Part IV, Section G(3)(g) of this Announcement]

(5) The role of partnering financial institutions in account management and data collection and reporting;

(6) The role of the applicant and partners in providing training, counseling, and other types of support to participants, including those activities documented as in-kind contributions to the project under Element IV, below; and

(7) Any plans included in the proposed project for crisis intervention activities that will be able to provide assistance to participants so as to avoid emergency withdrawals which might jeopardize continued participation in the project.

It is suggested that applicants use no more than 9 pages for this Sub-Element, not including any sample ''Savings Plan Agreement'', which if provided should be included in an Appendix.

Sub-Element II(c). Work Plan, Projections, Time Lines. (Weight of 0–5 points)

Applicant should provide quantitative quarterly projections of the activities to be carried out and such information as the projected number of participants to be enrolled, the number of Individual Development Accounts to be opened, the number and amount of deposits, and the number and types of services provided to participants. The plan should briefly describe the key project tasks, and show the timelines and major milestones for their implementation. Applicant may be able to use a simple Gantt or time line chart to convey the work plan in minimal space.

It is suggested that applicants use no more than 2 pages for this Sub-Element.

Element III. Evaluation Data: Adequacy of Plan for Providing Information for Evaluation. (Weight of 0–15 points)

Applicant should identify the kinds of data to be collected, maintained, and/or disseminated. The AFI Act makes provision for a national evaluation of the demonstration program as a whole, and sets aside 2% of the appropriated funds for its support. In addition, each grantee must spend at least 2% of its grant funds (but not more than 9.5%) for the collection of data needed to support the evaluation. This Element of the application will be judged on the adequacy of the plan for providing information relevant to an evaluation of the project.

Note: To achieve the maximum score for this Element in the review process, applications must include a statement that the applicant agrees to use the ''MIS IDA'' information system software developed by the Center for Social Development, or a comparable and compatible system, for the maintenance, collection, and transmission of data from the proposed project.

It is suggested that applicants use no more than 2 pages for this Element.

Element IV. Commitment of Non-Federal Funds and Additional Resources. (Weight of 0–15 points)

The aggregate amount of direct funds from non-federal public sector and from private sources that are formally committed to the project as matching contributions; and the mobilization of additional resources in support of project .

As noted below in Part VI, Paragraph D Initial OCS Screening, only applications which include written documentation of a commitment to the provision of a non-Federal share, in cash as distinguished from in-kind, of at least the amount of the total federal grant requested for the project will be considered for competitive review.

At the same time, OCS has determined that the strict legislative limitations on the use of Federal grant funds and of the minimum required non-Federal match (at least 90.5% of each must go toward matching deposits in Individual Development Accounts) mean that important training, counseling and support activities, critical to the success of a project, can only be supported by additional resources, both of the applicant itself and mobilized by the applicant in the community.

Consequently, applicants documenting only the required non-Federal 100% cash matching contributions to the project will receive no more than 8 points for this Element, subject to the Notation below regarding legislative preferences.

In this section the applicant should identify those additional resources, cash and in-kind, which will be dedicated to support of those activities and interventions identified in sub-Element II(b), such as training, counseling, and crisis intervention; and any staff activities described in Element III. Such resources may be existing programs of the applicant or a project partner, such as Family Development, Literacy classes, or Small Business Training, in which Project Participants will be enrolled as part of their efforts to achieve self-sufficiency. This Element will be judged in the review process on the adequacy of the mobilized resources to support the activities and interventions described in sub-Element II(b). The commitment of such resources to the project must be documented in writing and submitted as an Appendix to the Application. Because such additional resources are not part of the legislatively mandated non-Federal matching requirement, these additional resources may be of Federal or non-Federal origin, public or private, in cash or in-kind. Applicants are reminded that they will be held accountable for commitments of such additional resources even if over the amount of the required match.

Note: In accordance with the legislative preferences set forth in Part IV Section J, above, the maximum score for this Element, in the review of applications under Priority Area 1.0 only, will only be given to applications which provide a commitment of required non-Federal cash matching contributions with a proportionately greater amount of such funds committed from private sector as opposed to public sources. This preference will be valued at 2 points in the proposal review, so that the absence of such a commitment will reduce the review score for the Element by 2 points.

It is suggested that no more than 3 pages be used for this Element, not including any letters of commitment or partnership agreements, which should be put in an Appendix to the proposal.

Element V. Results or Benefits Expected: Significant and Beneficial Impacts. (Weight of 0–10 points)

The proposed project is expected to produce permanent and measurable results that will reduce the incidence of poverty in the community and lead TANF recipients and other eligible individuals and families toward economic self-sufficiency. Results are expected to be quantifiable in terms of the number of Individual Development Accounts opened, their rate of growth, the number and size of withdrawals for each of the three qualified expenses, and the impact of the payment of those expenses on the participants' movement toward self-sufficiency.

Applicants should set forth their realistic goals and projections for attainment of these and other beneficial impacts of the proposed project.

Critical issues or potential problems that might affect the achievement of project objectives should be explicitly addressed, with an explanation of how they would be overcome, and how the objectives will be achieved notwithstanding any such problems.

It is suggested that no more than 3 pages be used for this Element.

D. Proposal Elements and Review Criteria for Application Under Priority Area 2.0

(Not applicable)

E. Funding Reconsideration

After Federal funds are exhausted for this grant competition, applications which have been independently reviewed and ranked but have no final disposition (neither approved nor disapproved for funding) may again be considered for funding. Reconsideration may occur at any time funds become available within twelve (12) months following ranking. ACF does not select from multiple ranking lists for a program. Therefore, should a new competition based on the same review criteria be scheduled and applications remain ranked without final disposition, such applications will be entered into the rank order list for the new competition in accordance with their previous score. At the same time, such applicants will be informed of their opportunity instead to reapply for the new competition, if they so choose, and to the extent practical, in which case the previous application will be disregarded.

Part VI. Application Procedures

A. Application Development/ Availability of Forms

In order to be considered for a grant under this program announcement, an application must conform to the Program Requirements set out in Part IV and be prepared in accordance with the guidelines set out in Part V, above. It must be submitted on the forms supplied in the attachments to this Announcement and in the manner prescribed below. Attachments A through I contain all of the standard forms necessary for the application for awards under this OCS program. These attachments and Parts VI and VII of this Announcement contain all the instructions required for submittal of applications.

Additional copies may be obtained by writing or telephoning the office listed under the section entitled **FOR FURTHER INFORMATION CONTACT:** at the beginning of this announcement. In addition, this Announcement is accessible on the Internet through the OCS Website for reading or downloading at ''http://www.acf.dhhs.gov/programs/ocs'' under ''funding opportunities''.

The applicant must be aware that in signing and submitting the application for this award, it is certifying that it will comply with the Federal requirements concerning the drug-free workplace, debarment regulations and the Certification Regarding Environmental Tobacco Smoke, set forth in Attachments G, I and H.

Part V contains instructions for the substance and development of the project narrative. Part VII contains instructions for completing application forms. Part VIII, Section A describes the contents and format of the application as a whole.

B. Application Submission

(1) Number of Copies Required. One signed original application and four copies should be submitted at the time of initial submission. (OMB 0970–0139)

(2) Deadline. Applications shall be considered as meeting the announced deadline of August 9, 1999 if they are received on or before the deadline date. Mailed applications must be sent to: U.S. Department of Health and Human Services, Administration for Children and Families, Office of grants Management, Office of Child Support Enforcement, ''Attention: IDA Program'', 370 L'Enfant Promenade, SW., Washington, DC 20447.

Applications handcarried by applicants, applicant couriers, other representatives of the applicant, or by express or overnight delivery services shall be considered as meeting an announced deadline if they are received on or before the deadline date, between the hours of 8:00 a.m. and 4:30 p.m., EDT, at the U.S. Department of Health and Human Services, Administration for Children and Families, Office of grants Management, Office of Child Support Enforcement, Mailroom, 2nd Floor (near loading dock), Aerospace Center, 901 D Street, SW., Washington, DC 20024, between Monday and Friday (excluding Federal holidays). The address must appear on the envelope/package containing the application with the note ''Attention: IDA Program''. (Applicants are cautioned that express/overnight mail services do not always deliver as agreed.)

ACF cannot accommodate transmission of applications by fax or through other electronic media. Therefore, applications transmitted to ACF electronically will not be accepted regardless of date or time of submission and time of receipt.

(3) Late applications. Applications which do not meet the criteria above are considered late applications. ACF shall notify each late applicant that its application will not be considered in the current competition.

(4) Extension of deadlines. ACF may extend an application deadline when circumstances such as acts of God (floods, hurricanes, etc.) occur, or when there are widespread disruption of the mail service, or in other rare cases. Determinations to extend or waive deadline requirements rest with ACF's Chief Grants Management Officer.

C. Intergovernmental Review

This program is covered under Executive Order 12372, ''Intergovernmental Review of Federal Programs,'' and 45 CFR Part 100, ''Intergovernmental Review of Department of Health and Human Services Programs and Activities.'' Under the Order, States may design their own processes for reviewing and commenting on proposed Federal assistance under covered programs.

Note: State/Territory participation in the intergovernmental review process does not signify applicant eligibility for financial assistance under a program. A potential applicant must meet the eligibility requirements of the program for which it is applying prior to submitting an application to its SPOC, if applicable, or to ACF.

Attachment J is a Single Point of Contact List for participating jurisdictions.

The following jurisdictions have elected not to participate in the Executive Order process: Alabama, Alaska, American Samoa, Colorado, Connecticut, Kansas, Hawaii, Idaho, Louisiana, Massachusetts, Minnesota, Montana, Nebraska, New Jersey, Oklahoma, Oregon, Palau, Pennsylvania, South Dakota, Tennessee, Vermont, Virginia, and Washington. Applicants from these jurisdictions, for projects administered by federally recognized Indian Tribes, or which are States (under Priority Area 2.0) need take no action in regard to E.O. 12372. All remaining jurisdictions participate in the Executive Order process and have established SPOCs. Applicants from participating jurisdictions should contact their SPOCs as soon as possible to alert them of the prospective applications and receive instructions.

Applicants must submit any required material to the SPOCs as soon as possible so that the program office can obtain and review SPOC comments as part of the award process. The applicant must submit all required materials, if any, to the SPOC and indicate the date of this submittal (or the date of contact if no submittal is required) on the Standard Form 424, item 16a. Under 45 CFR 100.8(a)(2), a SPOC has 60 days from the application deadline to comment on proposed awards. SPOCs are encouraged to eliminate the submission of routine endorsements as official recommendations. Additionally,

SPOCs are requested to differentiate clearly between mere advisory comments and those official State process recommendations which may trigger the ''accommodate or explain'' rule. When comments are submitted directly to ACF, they should be addressed to: U.S. Department of Health and Human Services, Administration for Children and Families, Office of grants Management, Office of Child Support Enforcement, ''Attention: IDA Program'', 370 L'Enfant Promenade, SW, Washington, DC 20447.

D. Initial OCS Screening

Each application submitted under this program announcement will undergo a pre-review to determine that the application was received by the closing date and submitted in accordance with the instructions in this announcement.

All applications that meet the published deadline requirements as provided in this Program Announcement will be screened for completeness and conformity with the following requirements. Only complete applications that meet the requirements listed below will be reviewed and evaluated competitively. Other applications will be returned to the applicants with a notation that they were unacceptable and will not be reviewed.

The following requirements must be met by all applicants except as noted:

(1) The application must contain a Standard Form 424 ''Application for Federal Assistance'' (SF–424), a budget (SF–424A), and signed ''Assurances'' (SF 424B) completed according to instructions published in Part VII and Attachments A, B, and C of this Program Announcement.

(2) A project narrative must also accompany the standard forms. OCS requires that the narrative portion of the application be limited to 30 pages, typewritten on one side of the paper only with one-inch margins and type face no smaller than 12 characters per inch (cpi) or equivalent. The Budget Narrative, Charts, exhibits, resumes, position descriptions, letters of support or commitment, Agreements with partnering organizations, and Business Plans (where required) are not counted against this page limit. It is strongly recommended that applicants follow the format and content for the narrative described in the program elements set out in Part V.

(3) The SF–424 and the SF–424B must be signed by an official of the organization applying for the grant who has authority to obligate the organization legally. Applicants must also be aware that the applicant's legal name as required on the SF–424 (Item 5) must match that listed as corresponding to the Employer Identification Number (Item 6).

(4) In the case of applications under Priority Area 1.0, application must contain documentation of the applicant's tax exempt status as required under Part IV, Section A.

(5) In the case of Application under Priority Area 1.0, the Application must include a copy of a ''Non-Federal Share Agreement'' or Agreements in writing executed with the entity or entities providing the required non-Federal matching contributions, on letterhead of the entity and signed by a person authorized to make a commitment on behalf of the entity. Such Agreement(s) must include: (1) a commitment to provide the non-Federal funds contingent only on the grant award; (2) a schedule of deposits to the project's Reserve Fund of at least ten percent of the total committed for the entire project at the start of each of the Project Years, plus any additional amounts needed to assure that there are at all times in the Reserve Fund non-Federal matching contribution funds equal to the total amounts pledged as maximum matching contributions under the ''Savings Plan Agreements'' for all Individual Development Accounts then open and being maintained by the grantee as part of the demonstration project; and (3) a statement that up to 9.5 percent of the required non Federal matching contribution funds it provides may be allocated from the Reserve Fund to the support of project administration, Participant support, data collection or other project-related expenses. (See PART IV Sections G(1)(b) and I.) Grantees are encouraged to mobilize additional resources, which may be cash or in-kind contributions, Federal or non-Federal, for support of project administration and assistance to Project Participants in obtaining skills, knowledge, and needed support services. (See Part V, Element IV).

Note: If a grantee mobilizes matching non-Federal contributions in excess of the required 100 percent match, such non-Federal funds may be used however the grantee and provider of the funds may agree. (See also Part IV, Section I)

(6) In the case of Application under Priority Area 1.0 the Application must include a copy of an Agreement between the Applicant and one or more Qualified Financial Institution(s), which states that the accounting procedures to be followed in account management will conform to Guidelines established by the Secretary (which will be issued prior to grant awards and provided to grantees at time of award), and under which the partnering financial institution will agree to provide data and reports as requested by the applicant.

E. Consideration of Applications Under Priority Area 1.0

Applications which pass the initial OCS screening will be reviewed and rated by an independent review panel on the basis of the specific review criteria described in Part V, above. The review criteria were designed to assess the quality of a proposed project, and to determine the likelihood of its success. The evaluation criteria are closely related and are considered as a whole in judging the overall quality of an application. Points are awarded only to applications which are responsive to the review criteria within the context of this program announcement. The results of these reviews will assist the Director and OCS program staff in considering competing applications. Reviewers' scores will weigh heavily in funding decisions, but will not be the only factors considered.

Applications generally will be considered in order of the average scores assigned by reviewers. However, highly ranked applications are not guaranteed funding since other factors are taken into consideration, including, but not limited to, the timely and proper completion of projects funded with OCS funds granted in the last five (5) years; comments of reviewers and government officials; staff evaluation and input; the amount and duration of the grant requested and the proposed project's consistency and harmony with OCS goals and policy; geographic distribution of applications; previous program performance of applicants; compliance with grant terms under previous HHS grants, including the actual dedication to program of mobilized resources as set forth in project applications; audit reports; investigative reports; and applicant's progress in resolving any final audit disallowances on previous OCS or other Federal agency grants.

Since non-Federal reviewers will be used for review of applications under Priority Area 1.0, applicants may omit from the application copies (under Priority Area 1.0 only) which will be made available to the non-Federal reviewers, the specific salary rates or amounts for individuals identified in the application budget. Rather, only summary information is required.

OCS reserves the right to discuss applications with other Federal or non-Federal funding sources to verify the

applicant's performance record and the documents submitted.

F. Consideration of Applications Under Priority Area 2.0

(Not applicable)

Part VII. Instructions for Completing Application Forms

The standard forms attached to this announcement shall be used to apply for funds under this program announcement.

It is suggested that you reproduce single-sided copies of the SF–424 and SF–424A, and type your application on the copies. Please prepare your application in accordance with instructions provided on the forms (Attachments A and B) as modified by the OCS specific instructions set forth below:

Provide line item detail and detailed calculations for each budget object class identified on the Budget Information form. Detailed calculations must include estimation methods, quantities, unit costs, and other similar quantitative detail sufficient for the calculation to be duplicated. The detailed budget must also include a breakout by the funding sources identified in Block 15 of the SF–424.

Provide a narrative budget justification which describes how the categorical costs are derived. Discuss the necessity, reasonableness, and allocability of the proposed costs.

A. SF–424—Application for Federal Assistance (Attachment A) Top of Page

Where the applicant is a previous Department of Health and Human Services grantee, enter the Central Registry System Employee Identification Number (CRS/EIN) and the Payment Identifying Number, if one has been assigned, in the Block entitled Federal Identifier located at the top right hand corner of the form (third line from the top).

Item 1. For the purposes of this announcement, all projects are considered Applications; there are no Pre-Applications.

Item 7. If applicant is a State, enter ''A'' in the box. If applicant is an Indian Tribe enter ''K'' in the box. If applicant is a non-profit organization enter ''N'' in the box.

Item 9. Name of Federal Agency—Enter DHHS–ACF/OCS.

Item 10. The Catalog of Federal Domestic Assistance number for OCS programs covered under this announcement is 93.602. The title is ''IDA Program''.

Item 11. In addition to a brief descriptive title of the project, indicate the priority area for which funds are being requested. Use the following letter designations:

I—Individual projects under Priority Area 1.0.

S—Statewide projects under Priority Area 2.0.

Item 13. Proposed Project—The project start date must begin on or before September 30, 1999; the ending date should be calculated on the basis of the 36- to 60-month Project Period.

Item 15a. This amount should be no greater than $500,000 for applications under Priority Area 1.0.

Item 15b–e. These items should reflect both cash and third-party, in-kind contributions for the Project Period.

B. SF–424A—Budget Information—Non-Construction Programs (Attachment B)

In completing these sections, the Federal Funds budget entries will relate to the requested OCS funds only, and Non-Federal will include mobilized funds from all other sources—applicant, state, local, and other. Federal funds other than requested OCS funding should be included in Non-Federal entries.

Sections A, B, and C of SF–424A should reflect budget estimates for each year of the Project Period.

Section A—Budget Summary

You need only fill in lines 1 and 5 (with the same amounts)

Col. (a): Enter ''IDA Program'' as Item number 1. (Items 2, 3, 4, and 5 should be left blank.)

Col.(b): Catalog of Federal Domestic Assistance number is 93.602.

Col. (c) and (d): not relevant to this program.

Column (e)—(g): enter the appropriate amounts in items 1. and 5. (Totals) Column e should not be more than $500,000 for applications under Priority Area 1.0; and in no case can it be more than the committed non-Federal matching cash contribution.

Section B—Budget Categories

(Note that the following information supersedes the instructions provided with the Form in Attachment C)

Columns (1)—(5): For each of the relevant Object Class Categories:

Column 1: Enter the OCS grant funds for the full 3- to 5-year budget period. With regard to Class Categories, at least 90.5 percent of OCS grant funds should be entered in ''h. Other'', representing the funds to be deposited in the Reserve Fund. At least 2 percent of OCS grant funds, for data collection, should be entered under ''Other'', ''Contractual'', and/or ''Personnel'' as appropriate. Up to 7.5 percent of OCS grant funds, which may be for project administration and support, should be entered in Class Categories as appropriate.

Columns 2, 3 and 4 are not relevant to this program.

Column 5: Enter the total federal OCS grant funds for the five year budget by Class Categories, showing a total of not more than $500,000.

Note: Only out-of-town travel should be entered under Category c. Travel. Local travel costs should be entered under Category h. Other. Costs of supplies should be included under Category e. ''Supplies'' is tangible personal property other than ''equipment''. ''Equipment'' means an article of nonexpendable, tangible personal property having a useful life of more than one year and an acquisition cost which equals or exceeds the lesser of (a) the capitalization level established by the organization for financial statement purposes, or (b) $5,000. Articles costing less should be included in ''Supplies''.

Section C—Non Federal Resources

This section is to record the amounts of ''non-Federal'' resources that will be used to support the project. In this context, ''Non-Federal'' resources mean other than the OCS funds for which the applicant is applying. Therefore, mobilized funds from other Federal programs, such as the Job Training Partnership Act program or the Welfare-to-Work program, should be entered on these lines. Provide a brief listing of these ''non-Federal'' resources on a separate sheet and describe whether it is a grantee-incurred cost or a third-party cash or in-kind contribution. The firm commitment of these resources must be documented and submitted with the application in order to be given credit in the review process under the Non-Federal Resources program element.

(**Note:** Even though non-Federal resources mobilized may go beyond the amount required as match under the IDA Program, grantees will be held accountable for any such cash or in-kind contribution proposed or pledged as part of an approved application. (See Part IV, Section I. and Part V, Element IV.)

Sections D, E, and F may be left blank by Applicants under Priority Area 1.0.

As noted in Part VIII, a supporting Budget Justification must be submitted providing details of expenditures under each budget category, with justification of dollar amounts which relate the proposed expenditures to the work program and goals of the project.

C. SF–424B Assurances: Non-Construction Programs

Applicants requesting financial assistance for a non-construction project

must file the Standard Form 424B, ''Assurances: Non-Construction Programs.'' (Attachment C) Applicants must sign and return the Standard Form 424B with their applications.

Applicants must provide a certification concerning Lobbying. Prior to receiving an award in excess of $100,000, applicants shall furnish an executed copy of the lobbying certification. (See Attachments D and E) Applicants must sign and return the certification with their applications. Applicants should note that the Lobbying Disclosure Act of 1995 has simplified the lobbying information required to be disclosed under 31 USC 1352.

Applicants must make the appropriate certification on their compliance with the Drug-Free Workplace Act of 1988 and the Pro-Children Act of 1994 (Certification Regarding Smoke Free Environment). (See Attachments G and H) By signing and submitting the applications, applicants are attesting to their intent to comply with these requirements and need not mail back the certification with the applications.

Applicants must make the appropriate certification that they are not presently debarred, suspended or otherwise ineligible for award. (See Attachment I) By signing and submitting the applications, applicants are providing the certification and need not mail back the certification with the applications. Copies of the certifications and assurances are located at the end of this announcement.

Part VIII. Contents of Application and Receipt Process

Application pages should be numbered sequentially throughout the application package, beginning with an Abstract of the proposed project as page number one; and each application must include all of the following, in the order listed below:

A. Content and Order of IDA Program Application

1. Table of Contents;
2. An Abstract of the project—very brief, not to exceed 300 words, that would be suitable for use in an announcement that the application has been selected for a grant award; which identifies the type of project(s), the target population, the applicant, partners, and the major elements of the work plan.
3. A completed Standard Form 424 (Attachment A) which has been signed by an official of the organization applying for the grant who has authority to obligate the organization legally; [Note: The original SF–424 must bear the original signature of the authorizing representative of the applicant organization];
4. A completed Budget Information-Non-Construction Programs (SF–424A) (Attachment B);
5. A narrative budget justification for each object class category included under Section B;
6. Proof of tax-exempt status;
7. *A project narrative,* limited to the number of pages specified below, which includes all of the required elements described in Part V. [Specific information/data required under each component is described in Part V Section C, Application Elements and Review Criteria.]
8. *Appendices,* which should include the following:

a. Filled out, signed and dated *Assurances—Non-Construction Programs* (SF–424B), Attachment C;

b. *Restrictions on Lobbying—Certification for Contracts, Grants, Loans, and Cooperative Agreements:* filled out, signed and dated form found at Attachment D;

c. *Disclosure of Lobbying Activities, SF–LLL:* Filled out, signed and dated form found at Attachment E, if appropriate (omit Items 11–15 on the SF LLL and ignore references to continuation sheet SF–LLL–A)

d. *Maintenance of Effort Certification* (See Attachment F);

e. Signed *Agreement* with partnering Financial Institution(s) (in the case of Application under Priority Area 1.0 only);

f. Signed *Agreements with providers of Required non-Federal matching contributions* (see Program Element IV);

g. Resumes and/or position descriptions;

h. Any letters from cooperating or partnering agencies in target communities. [Such letters are not part of the Narrative and should be included in the Appendices. These letters are therefore not counted against the page limitations of the Narrative.]; and

i. Single points of contact comments, if applicable.

Applications must be uniform in composition since OCS may find it necessary to duplicate them for review purposes. Therefore, applications must be submitted on white 8½ x 11 inch paper only. They must not include colored, oversized or folded materials. Do not include organizational brochures or other promotional materials, slides, films, clips, etc. in the proposal. They will be discarded if included. The applications should be two-hole punched at the top center and fastened separately with a compressor slide paper fastener, or a binder clip. The submission of bound plans, or plans enclosed in binders is specifically discouraged.

B. Acknowledgement of Receipt

Acknowledgment of Receipt—All applicants will receive an acknowledgement with an assigned identification number. Applicants are requested to supply a self-addressed mailing label with their Application, or a FAX number or e-mail address which can be used for acknowledgement. The assigned identification number, along with any other identifying codes, must be referenced in all subsequent communications concerning the Application. If an acknowledgement is not received within three weeks after the deadline date, please notify ACF by telephone at (202) 401–5103.

Part VII. Post Award Information and Reporting Requirements

A. Notification of Grant Award

Following approval of the applications selected for funding, notice of project approval and authority to draw down project funds will be made in writing. The official award document is the Financial Assistance Award which provides the amount of Federal funds approved for use in the project, the project and budget period for which support is provided, the terms and conditions of the award, and the total project period for which support is contemplated.

B. Attendance at Evaluation Workshops

OCS hopes to sponsor one or more national evaluation workshops in Washington, D.C. or in other locations during the course of the five-year project. Project Directors will be expected to attend such workshops provided funds can be made available by OCS for expenses of attending.

C. Reporting Requirements

Grantees will be required to submit a semi-annual program progress and financial report (SF 269) covering the six months after grant award, and similar reports after conclusion of the first Project Year. Such reports will be due 60 days after the reporting period. Thereafter grantees will be required to submit annual program progress and financial reports (SF 269), as well as a final program progress and financial report within 90 days of the expiration of the grant.

D. Audit Requirements

Grantees are subject to the audit requirements in 45 CFR Parts 74 (non-profit organization) and OMB Circular A–133.

E. Prohibitions and Requirements With Regard to Lobbying

Section 319 of Public Law 101–121, signed into law on October 23, 1989, imposes prohibitions and requirements for disclosure and certification related to lobbying on recipients of Federal contracts, grants, cooperative agreements, and loans. It provides limited exemptions for Indian tribes and tribal organizations. Current and prospective recipients (and their subtier contractors and/or grantees) are prohibited from using appropriated funds for lobbying Congress or any Federal agency in connection with the award of a contract, grant, cooperative agreement or loan. In addition, for each award action in excess of $100,000 (or $150,000 for loans) the law requires recipients and their subtier contractors and/or subgrantees (1) to certify that they have neither used nor will use any appropriated funds for payment to lobbyists, (2) to submit a declaration setting forth whether payments to lobbyists have been or will be made out of non-appropriated funds and, if so, the name, address, payment details, and purpose of any agreements with such lobbyists whom recipients or their subtier contractors or subgrantees will pay with the non-appropriated funds and (3) to file quarterly up-dates about the use of lobbyists if an event occurs that materially affects the accuracy of the information submitted by way of declaration and certification.

The law establishes civil penalties for noncompliance and is effective with respect to contracts, grants, cooperative agreements and loans entered into or made on or after December 23, 1989. See Attachment H, for certification and disclosure forms to be submitted with the applications for this program.

F. Applicable Federal Regulations

Attachment K indicates the regulations which apply to all applicants/grantees under the Assets for Independence Demonstration Program.

Dated: June 16, 1999.

Donald Sykes,

Director, Office of Community Services.

Assets for Independence Demonstration Program

List of Attachments

Attachment A: Application for Federal Assistance

Attachment B: Budget Information—Non-Construction Programs

Attachment C: Assurances—Non-Construction Programs

Attachment D: Certification Regarding Lobbying

Attachment E: Disclosure of Lobbying Activities

Attachment F: Certification Regarding Maintenance of Effort

Attachment G: Certification Regarding Drug-Free Workplace Requirements

Attachment H: Certification Regarding Environmental Tobacco Smoke

Attachment I: Certification Regarding Debarment, Suspension and Other Responsibility Matters

Attachment J: E.O. 12372 State Single Point of Contact List

Attachment K: DHHS Regulations Applying to All Applicants/Grantees Under the Assets for Independence Demonstration program (IDA Program)

BILLING CODE 4184–01–P

Attachment A

APPLICATION FOR FEDERAL ASSISTANCE

OMB Approval No. 0348-0043

2. DATE SUBMITTED	Applicant Identifier	
3. DATE RECEIVED BY STATE	State Application Identifier	
4. DATE RECEIVED BY FEDERAL AGENCY	Federal Identifier	

1. TYPE OF SUBMISSION:

Application: ☐ **Construction** ☐ **Non-Construction**

Preapplication: ☐ **Construction** ☐ **Non-Construction**

5. APPLICANT INFORMATION

Legal Name:

Organizational Unit:

Address *(give city, county, State, and zip code):*

Name and telephone number of person to be contacted on matters involving this application *(give area code)*

6. EMPLOYER IDENTIFICATION NUMBER *(EIN):*

☐☐ – ☐☐☐☐☐☐☐

7. TYPE OF APPLICANT: *(enter appropriate letter in box)* ☐

A. State
B. County
C. Municipal
D. Township
E. Interstate
F. Intermunicipal
G. Special District
H. Independent School Dist.
I. State Controlled Institution of Higher Learning
J. Private University
K. Indian Tribe
L. Individual
M. Profit Organization
N. Other (Specify) _____

8. TYPE OF APPLICATION:

☐ **New** ☐ **Continuation** ☐ **Revision**

If Revision, enter appropriate letter(s) in box(es) ☐ ☐

A. Increase Award B. Decrease Award C. Increase Duration
D. Decrease Duration Other*(specify):*

_____

9. NAME OF FEDERAL AGENCY:

10. CATALOG OF FEDERAL DOMESTIC ASSISTANCE NUMBER:

☐☐ – ☐☐☐

TITLE:

11. DESCRIPTIVE TITLE OF APPLICANT'S PROJECT:

12. AREAS AFFECTED BY PROJECT *(Cities, Counties, States, etc.):*

13. PROPOSED PROJECT		**14. CONGRESSIONAL DISTRICTS OF:**	
Start Date	Ending Date	a. Applicant	b. Project

15. ESTIMATED FUNDING:

a. Federal	$	.00
b. Applicant	$	.00
c. State	$	.00
d. Local	$	.00
e. Other	$	.00
f. Program Income	$	.00
g. TOTAL	$	.00

16. IS APPLICATION SUBJECT TO REVIEW BY STATE EXECUTIVE ORDER 12372 PROCESS?

a. YES. THIS PREAPPLICATION/APPLICATION WAS MADE AVAILABLE TO THE STATE EXECUTIVE ORDER 12372 PROCESS FOR REVIEW ON:

DATE _____

b. No. ☐ PROGRAM IS NOT COVERED BY E. O. 12372
☐ OR PROGRAM HAS NOT BEEN SELECTED BY STATE FOR REVIEW

17. IS THE APPLICANT DELINQUENT ON ANY FEDERAL DEBT?

☐ **Yes** **If "Yes," attach an explanation.** ☐ **No**

18. TO THE BEST OF MY KNOWLEDGE AND BELIEF, ALL DATA IN THIS APPLICATION/PREAPPLICATION ARE TRUE AND CORRECT, THE DOCUMENT HAS BEEN DULY AUTHORIZED BY THE GOVERNING BODY OF THE APPLICANT AND THE APPLICANT WILL COMPLY WITH THE ATTACHED ASSURANCES IF THE ASSISTANCE IS AWARDED.

a. Type Name of Authorized Representative	b. Title	c. Telephone Number
d. Signature of Authorized Representative		e. Date Signed

Previous Edition Usable
Authorized for Local Reproduction

Standard Form 424 (Rev. 7-97)
Prescribed by OMB Circular A-102

BILLING CODE 4184–01–C

Instructions for the SF–424

Public reporting burden for this collection of information is estimated to average 45 minutes per response, including time for reviewing instructions, searching existing data sources, gathering and maintaining the data needed, and completing and reviewing the collection of information. Send comments regarding the burden estimate or any other aspect of this collection of information, including suggestions for reducing this burden, to the Office of Management and Budget, Paperwork Reduction Project (0348–0043), Washington, DC 20503.

Please do not return your completed form to the Office of Management and Budget. Send it to the address provided by the sponsoring agency.

This is a standard form used by applicants as a required facesheet for preapplications and applications submitted for Federal assistance. It will be used by Federal agencies to obtain applicant certification that States which have established a review and comment procedure in response to Executive Order 12372 and have selected the program to be included in their process, have been given an opportunity to review the applicant's submission.

Item and Entry

1. Self-explanatory.
2. Date application submitted to Federal agency (or State if applicable) and applicant's control number (if applicable).
3. State use only (if applicable).
4. If this application is to continue or revise an existing award, enter present Federal identifier number. If for a new project, leave blank.
5. Legal name of applicant, name of primary organizational unit which will undertake the assistance activity, complete address of the applicant, and name and telephone number of the person to contact on matters related to this application.
6. Enter Employer Identification Number (EIN) as assigned by the Internal Revenue Service.
7. Enter the appropriate letter in the space provided.
8. Check appropriate box and enter appropriate letter(s) in the space(s) provided:

—''New'' means a new assistance award.
—''Continuation'' means an extension for an additional funding/budget period for a project with a projected completion date.
—''Revision'' means any change in the Federal Government's financial obligation or contingent liability from an existing obligation.

9. Name of Federal agency from which assistance is being requested with this application.
10. Use the Catalog of Federal Domestic Assistance number and title of the program under which assistance is requested.
11. Enter a brief descriptive title of the project. If more than one program is involved, you should append an explanation on a separate sheet. If appropriate (e.g., construction or real property projects), attach a map showing project location. For preapplications, use a separate sheet to provide a summary description of this project.
12. List only the largest political entities affected (*e.g.*, State, counties, cities).
13. Self-explanatory.
14. List the applicant's Congressional District and any District(s) affected by the program or project.
15. Amount requested or to be contributed during the first funding/budget period by each contributor. Value of in-kind contributions should be included on appropriate lines as applicable. If the action will result in a dollar change to an existing award, indicate *only* the amount of the change. For decreases, enclose the amounts in parentheses. If both basic and supplemental amounts are included, show breakdown on an attached sheet. For multiple program funding, use totals and show breakdown using same categories as item 15.
16. Applicants should contact the State Single Point of Contact (SPOC) for Federal Executive Order 12372 to determine whether the application is subject to the State intergovernmental review process.
17. This question applies to the applicant organization, not the person who signs as the authorized representative. Categories of debt include delinquent audit disallowances, loans and taxes.
18. To be signed by the authorized representative of t he applicant. A copy of the governing body's authorization for you to sign this application as official representative must be on file in the applicant's office. (Certain Federal agencies may require that this authorization be submitted as part of the application.)

BILLING CODE 4181–01–M

BUDGET INFORMATION - Non-Construction Programs

OMB Approval No. 0348-0044

SECTION A - BUDGET SUMMARY

Grant Program Function or Activity (a)	Catalog of Federal Domestic Assistance Number (b)	Estimated Unobligated Funds		New or Revised Budget		
		Federal (c)	Non-Federal (d)	Federal (e)	Non-Federal (f)	Total (g)
1.		$	$	$	$	$
2.						
3.						
4.						
5. Totals		$	$	$	$	$

SECTION B - BUDGET CATEGORIES

6. Object Class Categories	GRANT PROGRAM, FUNCTION OR ACTIVITY				Total
	(1)	(2)	(3)	(4)	(5)
a. Personnel	$	$	$	$	$
b. Fringe Benefits					
c. Travel					
d. Equipment					
e. Supplies					
f. Contractual					
g. Construction					
h. Other					
i. Total Direct Charges *(sum of 6a-6h)*					
j. Indirect Charges					
k. TOTALS *(sum of 6i and 6j)*	$	$	$	$	$
7. Program Income	$	$	$	$	$

Authorized for Local Reproduction

Previous Edition Usable

Standard Form 424A (Rev. 7-97)
Prescribed by OMB Circular A-102

SECTION C - NON-FEDERAL RESOURCES				
(a) Grant Program	(b) Applicant	(c) State	(d) Other Sources	(e) TOTALS
8.	$	$	$	$
9.				
10.				
11.				
12. TOTAL *(sum of lines 8-11)*	$	$	$	$

SECTION D - FORECASTED CASH NEEDS					
	Total for 1st Year	1st Quarter	2nd Quarter	3rd Quarter	4th Quarter
13. Federal	$	$	$	$	$
14. Non-Federal					
15. TOTAL *(sum of lines 13 and 14)*	$	$	$	$	$

SECTION E - BUDGET ESTIMATES OF FEDERAL FUNDS NEEDED FOR BALANCE OF THE PROJECT				
(a) Grant Program	FUTURE FUNDING PERIODS (Years)			
	(b) First	(c) Second	(d) Third	(e) Fourth
16.	$	$	$	$
17.				
18.				
19.				
20. TOTAL *(sum of lines 16-19)*	$	$	$	$

SECTION F - OTHER BUDGET INFORMATION	
21. Direct Charges:	22. Indirect Charges:
23. Remarks:	

Authorized for Local Reproduction

Standard Form 424A (Rev. 7-97) Page 2

BILLING CODE 4184–01–C

Instructions for the SF–424A

Public reporting burden for this collection of information is estimated to average 180 minutes per response, including time for reviewing instructions, searching existing data sources, gathering and maintaining the data needed, and completing and reviewing the collection of information. Send comments regarding the burden estimate or any other aspect of this collection of information, including suggestions for reducing this burden, to the Office of Management and Budget, Paperwork Reduction Project (0348–0044), Washington, DC 20503.

Please do not return your completed form to the Office of Management and Budget. Send it to the address provided by the sponsoring agency.

General Instructions

This form is designed so that application can be made for funds from one or more grant programs. In preparing the budget, adhere to any existing Federal grantor agency guidelines which prescribe how and whether budgeted amounts should be separately shown for different functions or activities within the program. For some programs, grantor agencies may require budgets to be separately shown by function or activity. For other programs, grantor agencies may require a breakdown by function or activity. Sections A, B, C, and D should include budget estimates for the whole project except when applying for assistance which requires Federal authorization in annual or other funding period increments. In the latter case, Sections A, B, C, and D should provide the budget for the first budget period (usually a year) and Section E should present the need for Federal assistance in the subsequent budget periods. All applications should contain a breakdown by the object class categories should in Lines a-k of section B.

Section A. Budget Summary Lines 1–4

Columns (a) and (b)

For applications pertaining to a single Federal grant program (Federal Domestic Assistance Catalog number) and not requiring a functional or activity breakdown, either on Line 1 under Column (a) the Catalog program title and the Catalog number in Column (b).

For applications pertaining to a single program requiring budget amounts by multiple functions or activities, enter the name of each activity or function on each line in Column (a), and enter the Catalog number in Column (b). For applications pertaining to multiple programs where none of the programs require a breakdown by function or activity, enter the Catalog program title on each line in Column (a) and the respective Catalog number on each line in Column (b).

For applications pertaining to multiple programs where one or more program require a breakdown by function or activity, prepare a separate sheet for each program requiring the breakdown. Additional sheets should be used when one form does not provide adequate space for all breakdown of data required. However, when more than one sheet is used, the first page should provide the summary totals by programs.

Lines 1–4, Columns (c) Through (g)

For new applications, leave Column (c) and (d) blank. For each line entry in Columns (a) and (b), enter in Columns (e), (f), and (g) the appropriate amounts of funds needed to support the project for the first funding period (usually a year).

For continuing grant program applications, submit these forms before the end of each funding period as required by the grantor agency. Enter in Columns (c) and (d) the estimated amounts of funds which will remain unobligated at the end of the grant funding period only if the Federal grantor agency instructions provide for this. Otherwise, leave these columns blank. Enter in columns (e) and (f) the amounts of funds needed for the upcoming period. The amount(s) in Column (g) should be the sum of amounts in Columns (e) and (f).

For supplemental grants and changes to existing grants, do not use Columns (c) and (d). Enter in Column (e) the amount of the increase or decrease of Federal funds and enter in Column (f) the amount of the increase or decrease of non-Federal funds. In Column (g) enter the new total budgeted amount (Federal and non-Federal) which includes the total previous authorized budgeted amounts plus or minus, as appropriate, the amounts shown in Columns (e) and (f). The amount(s) in Column (g) should not equal the sum of amounts in Columns (e) and (f).

Line 5—Show the totals for all columns used.

Section B. Budget Categories

In the column headings (1) through (4), enter the titles of the same programs, functions, and activities shown on Lines 1–4, Column (a), Section A. When additional sheets are prepared for Section A, provide similar column headings on each sheet. For each program, function or activity, fill in the total requirements for funds (both Federal and non-Federal) by object class categories.

Line 6a-i—Show the totals of Lines 6a to 6h in each column.

Line 6j—Show the amount of indirect cost.

Line 6k—Enter the total of amounts on Lines 6i and 6j. For all applications for new grants and continuation grants the total amount in column (5), Line 6k, should be the same as the total amount in Section A, Column (g), Line 5. For supplemental grants and changes to grants, the total amount of the increase or decrease as shown in Columns (1)-(4), Line 6k should be the same as the sum of the amounts in Section A, Columns (e) and (f) on Line 5.

Line 7—Enter the estimated amount of income, if any expected to be generated from this project. Do not add or subtract this amount from the total project amount, Show under the program narrative statement the nature and source of income. The estimated amount of program income may be considered by the Federal grantor agency in determining the total amount of the grant.

Section C. Non-Federal Resources

Lines 8–11 Enter amounts of non-Federal resources that will be used on the grant. If in-kind contributions are included, provide a brief explanation on a separate sheet.

Column (a)—Enter the program titles identical to Column (a), Section A. A breakdown by function or activity is not necessary.

Column (b)—Enter the contribution to be made by the applicant.

Column (c)—Enter the amount of the State's cash and in-kind contribution if the applicant is not a State or State agency. Applicants which are a State or State agencies should leave this column blank.

Column (d)—Enter the amount of cash and in-kind contributions to be made from all other sources.

Column (e)—Enter totals of Columns (b), (c), and (d).

Line 12—Enter the total for each of Columns (b)-(e). The amount in Column (e) should be equal to the amount on Line 5, Column (f), Section A.

Section D. Forecasted Cash Needs

Line 13—Enter the amount of cash needed by quarter from the grantor agency during the first year.

Line 14—Enter the amount of cash from all other sources needed by quarter during the first year.

Line 15—Enter the totals of amounts on Lines 13 and 14.

Section E. Budget Estimates of Federal Funds Needed for Balance of the Project

Lines 16–19—Enter in Column (a) the same grant program titles shown in Column (a), Section A. A breakdown by function or activity is not necessary. For new applications and continuation grant applications, enter in the proper columns amounts of Federal funds which will be needed to complete the program or project over the succeeding funding periods (usually in years). This section need not be completed for revisions (amendments, changes, or supplements) to funds for the current year of existing grants.

If more than four lines are needed to list the program titles, submit additional schedules as necessary.

Line 20—Enter the total for each of the Columns (b)-(e). When additional schedules are prepared for this Section, annotate accordingly and show the overall totals on this line.

Section F. Other Budget Information

Line 21—Use this space to explain amounts for individual direct object class cost categories that may appear to be out of the ordinary or to explain the details as required by the Federal grantor agency.

Line 22—Enter the type of indirect rate (provisional, predetermined, final or fixed) that will be in effect during the funding period, the estimated amount of the base to which the rate is applied, and the total indirect expense.

Line 23—Provide any other explanations or comments deemed necessary.

Attachment C—Assurances—Non-Construction Programs

Public reporting burden for this collection of information is estimated to average 15 minutes per response, including time for reviewing instructions, searching existing data sources, gathering and maintaining the

data needed, and completing and reviewing the collection of information. Send comments regarding the burden estimate or any other aspect of this collection of information, including suggestions for reducing this burden, to the Office of Management and Budget, Paperwork Reduction Project (0348–0040), Washington, DC 20503.

Please do not return your completed form to the Office of Management and Budget. Send it to the address provided by the sponsoring agency.

Note: Certain of these assurances may not be applicable to your project or program. If you have questions, please contact the awarding agency. Further, certain Federal awarding agencies may require applicants to certify to additional assurances. If such is the case, you will be notified.

As the duly authorized representative of the applicant, I certify that the applicant:

1. Has the legal authority to apply for Federal assistance and the institutional, managerial and financial capability (including funds sufficient to pay the non-Federal share of project cost) to ensure proper planning, management and completion of the project described in this application.

2. Will give the awarding agency, the comptroller General of the United States and, if appropriate, the State, through any authorized representative, access to and the right to examine all records, papers, or documents related to the award; and will establish a proper accounting system in accordance with generally accepted accounting standards or agency directives.

3. Will establish safeguards to prohibit employees from using their positions for a purpose that constitutes or presents the appearance of personal or organizational conflict or interest, or personal gain.

4. Will initiate and complete the work within the applicable time frame after receipt of approval of the awarding agency.

5. Will comply with the Intergovernmental Personnel Act of 1970 (42 U.S.C. §§ 4728–4763) relating to prescribed standards for merit systems for programs funded under one of the 19 statutes or regulations specified in Appendix A of OPM's Standards for a Merit System of Personnel Administration (5 CFR 900, Subpart F).

6. Will comply with all Federal statutes relating to nondiscrimination. These include but are not limited to: (a) Title VI of the Civil Rights Act of 1964 (P.L. 88–352) which prohibits discrimination on the basis of race, color or national origin; (b) Title IX of the Education Amendments of 1972, as amended (20 U.S.C. §§ 1681–1683, and 1685–1686), which prohibits discrimination on the basis of sex; (c) Section 504 of the Rehabilitation Act of 1973, as amended (29 U.S.C. § 794), which prohibits discrimination on the basis of handicaps; (d) the Age Discrimination Act of 1975, as amended (42 U.S.C. §§ 6101–6107), which prohibits discrimination on the basis of age; (e) the Drug Abuse Office and Treatment Act of 1972 (P.L. 92–255), as amended, relating to nondiscrimination on the basis of drug abuse; (f) the Comprehensive Alcohol Abuse and Alcoholism Prevention, Treatment and Rehabilitation Act of 1970 (P.L. 91–616), as amended, relating to nondiscrimination on the basis of alcohol abuse or alcoholism; (g) §§ 523 and 527 of the Public Health Service Act of 1912 (42 U.S.C. §§ 290 dd–3 and 290 ee 3), as amended, relating to confidentiality of alcohol and drug abuse patient records; (h) Title VIII of the Civil Rights Act of 1968 (42 U.S.C. §§ 3601 et seq.), as amended, relating to nondiscrimination in the sale, rental or financing of housing; (i) any other nondiscrimination provisions in the specific statute(s) under which application for Federal Assistance is being made; and, (j) the requirements of any other nondiscrimination statute(s) which may apply to the application.

7. Will comply, or has already complied, with the requirements of Titles II and III of the Uniform Relocation Assistance and Real Property Acquisition Policies Act of 1970 (P.L. 91–646) which provide for fair and equitable treatment of persons displaced or whose property is acquired as a result of Federal or federally-assisted programs. These requirements apply to all interests in real property acquired for project purposes regardless of Federal participation in purchases.

8. Will comply, as applicable, with provisions of the Hatch Act (5 U.S.C. §§ 1501–1508 and 7324–7328) which limit the political activities of employees whose principal employment activities are funded in whole or in part with Federal funds.

9. Will comply, as applicable, with the provisions of the Davis-Bacon Act (40 U.S.C. §§ 276a to 276a–7), the Copeland Act (40 U.S.C. § 276c and 18 U.S.C. § 874), and the Contract Work Hours and Safety Standards Act (40 U.S.C. §§ 327–333), regarding labor standards for federally-assisted construction subagreements.

10. Will comply, if applicable, with flood insurance purchase requirements of Section 102(a) of the Flood Disaster Protection Act of 1973 (P.L. 93–234) which requires recipients in a special flood hazard area to participate in the program and to purchase flood insurance if the total cost of insurable construction and acquisition is $10,000 or more.

11. Will comply with environmental standards which may be prescribed pursuant to the following: (a) institution of environmental quality control measures under the National Environmental Policy Act of 1969 (P.L. 91–190) and Executive Order (EO) 11514; (b) notification of violating facilities pursuant to EO 11738; (c) protection of wetlands pursuant to EO 11990; (d) evaluation of flood hazards in floodplains in accordance with EO 11988; (e) assurance of project consistency with the approved State management program developed under the Coastal Zone Management Act of 1972 (16 U.S.C. §§ 1451 et seq.); (f) conformity of Federal actions to State (Clean Air) Implementation Plans under Section 176(c) of the Clean Air Act of 1955, as amended (42 U.S.C. §§ 7401 et seq.); (g) protection of underground sources of drinking water under the Safe Drinking Water Act of 1974, as amended (P.L. 93–523); and, (h) protection of endangered species under the Endangered Species Act of 1973, as amended (P.L. 93–205).

12. Will comply with the Wild and Scenic Rivers Act of 1968 (16 U.S.C. §§ 1271 et seq.) related to protecting components or potential components of the national wild and scenic rivers system.

13. Will assist the awarding agency in assuring compliance with Section 106 of the National Historic Preservation Act of 1966, as amended (16 U.S.C. § 470), EO 11593 (identification and protection of historic properties), and the Archaeological and Historic Preservation Act of 1974 (16 U.S.C. §§ 469a–1 et seq.)

14. Will comply with P.L. 93–348 regarding the protection of human subjects involved in research, development, and related activities supported by this award of assistance.

15. Will comply with the Laboratory Animal Welfare Act of 1966 (P.L. 89–544, as amended, 7 U.S.C. §§ 2131 et seq.) pertaining to the care, handling, and treatment of warm blooded animals held for research, teaching, or other activities supported by this award of assistance.

16. Will comply with the Lead-Based Paint Poisoning Prevention Act (42 U.S.C. §§ 4801 et seq.) which prohibits the use of lead-based paint in construction or rehabilitation of residence structures.

17. Will cause to be performed the required financial and compliance audits in accordance with the Single Audit Act Amendments of 1996 and OMB Circular No. A–133, ''Audits of States, Local Governments, and Non-Profit Organizations.''

18. Will comply with all applicable requirements of all other Federal laws, executive orders, regulations, and policies governing this program.

_____

Signature of Authorized Certifying Official

_____

Title

_____

Applicant Organization

_____

Date Submitted

Attachment D—Administration for Children and Families, U.S. Department of Health and Human Services

Certification Regarding Lobbying

Certification for Contracts, Grants, Loans, and Cooperative Agreements

The undersigned certifies, to the best of his or her knowledge and belief; that:

(1) No Federal appropriated funds have been paid or will be paid, by or on behalf of the undersigned, to any person for influencing or attempting to influence an officer or employee of an agency, a Member of Congress, an officer or employee of Congress, or an employee of a Member of Congress in connection with the awarding of any Federal contract, the making of any Federal grant, the making of any Federal loan, the entering into of any cooperative agreement, and the extension, continuation, renewal, amendment, or modification of any Federal contract, grant, loan, or cooperative agreement.

(2) If any funds other than Federal appropriated funds have been paid or will be paid to any person for influencing or

attempting to influence an officer or employee of any agency, a Member of Congress, an officer or employee of Congress, or an employee of a Member of Congress in connection with this Federal contract, grant, loan, or cooperative agreement, the undersigned shall complete and submit Standard Form-LLL, ''Disclosure Form to Report Lobbying,'' in accordance with its instructions.

(3) the undersigned shall require that the language of this certification be included in the award documents for all subawards at all tiers (including subcontracts, subgrants, and contracts under grants, loans, and cooperative agreements) and that all subrecipients shall certify and disclose accordingly. This certification is a material representation of fact upon which reliance was placed when this transaction was made or entered into. Submission of this certification is a prerequisite for making or entering into this transaction imposed by section 1352, title 31, U.S. Code. Any person who fails to file the required certification shall be subject to a civil penalty of not less than $10,000 and not more than $100,000 for each such failure.

Statement for Loan Guarantees and Loan Insurance

The undersigned states, to the best of his or her knowledge and belief, that:

If any funds have been paid or will be paid to any person for influencing or attempting to influence an officer or employee of any agency, a Member of Congress, an officer or employee of Congress, or an employee of a Member of Congress in connection with this commitment providing for the United States to insure or guarantee a loan, the undersigned shall complete and submit Standard Form-LLL, ''Disclosure Form to Report Lobbying,'' in accordance with its instructions. Submission of this statement is a prerequisite for making or entering into this transaction imposed by section 1352, title 31, U.S. Code. Any person who fails to file the required statement shall be subject to a civil penalty of not less than $10,000 and not more than $100,000 for each such failure.

Signature

Title

Organization

BILLING CODE 4184–01–M

Attachment E

DISCLOSURE OF LOBBYING ACTIVITIES

Approved by OMB 0348-0046

Complete this form to disclose lobbying activities pursuant to 31 U.S.C. 1352
(See reverse for public burden disclosure.)

1. Type of Federal Action: ☐ a. contract b. grant c. cooperative agreement d. loan e. loan guarantee f. loan insurance	**2. Status of Federal Action:** ☐ a. bid/offer/application b. initial award c. post-award	**3. Report Type:** ☐ a. initial filing b. material change **For Material Change Only:** year _____ quarter _____ date of last report _____
4. Name and Address of Reporting Entity: ☐ **Prime** ☐ **Subawardee** Tier _____, *if known*: **Congressional District**, *if known*:	**5. If Reporting Entity in No. 4 is a Subawardee, Enter Name and Address of Prime:** **Congressional District**, *if known*:	
6. Federal Department/Agency:	**7. Federal Program Name/Description:** CFDA Number, *if applicable*: _____	
8. Federal Action Number, *if known*:	**9. Award Amount**, *if known*: $	
10. a. Name and Address of Lobbying Registrant (*if individual, last name, first name, MI*):	**b. Individuals Performing Services** (*including address if different from No. 10a*) (*last name, first name, MI*):	
11. Information requested through this form is authorized by title 31 U.S.C. section 1352. This disclosure of lobbying activities is a material representation of fact upon which reliance was placed by the tier above when this transaction was made or entered into. This disclosure is required pursuant to 31 U.S.C. 1352. This information will be reported to the Congress semi-annually and will be available for public inspection. Any person who fails to file the required disclosure shall be subject to a civil penalty of not less that $10,000 and not more than $100,000 for each such failure.	Signature: _____ Print Name: _____ Title: _____ Telephone No.: _____ Date: _____	
Federal Use Only:		Authorized for Local Reproduction Standard Form LLL (Rev. 7-97)

BILLING CODE 4184–01–C

Instructions for Completion of SF–LLL, Disclosure of Lobbying Activities

This disclosure form shall be completed by the reporting entity, whether subawardee or prime Federal recipient, at the initiation or receipt of a covered Federal action, or a material change to a previous filing, pursuant to title 31 U.S.C. section 1352. The filing of a form is required for each payment or agreement to make payment to any lobbying entity for influencing or attempting to influence an officer or employee of any agency, a Member of Congress, an officer or employee of Congress, or an employee of a Member of Congress in connection with a covered Federal action. Complete all items that apply for both the initial filing and material change report. Refer to the implementing guidance published by the Office of Management and Budget for additional information.

1. Identify the type of covered Federal action for which lobbying activity is and/or has been secured to influence the outcome of a covered Federal action.

2. Identify the status of the covered Federal action.

3. Identify the appropriate classification of this report. If this is a followup report caused by a material change to the information previously reported, enter the year and quarter in which the change occurred. Enter the date of the last previously submitted report by this reporting entity for this covered Federal action.

4. Enter the full name, address, city, State and zip code of the reporting entity. Include Congressional District, if known. Check the appropriate classification of the reporting entity that designates if it is, or expects to be, a prime or subaward recipient. Identify the tier of the subawardee, e.g., the first subawardee of the prime is the 1st tier. Subawards include but are not limited to subcontracts, subgrants and contract awards under grants.

5. If the organization filing the report in item 4 checks ''Subawardee,''then enter the full name, address, city, State and zip code of the prime Federal recipient. Include Congressional District, if known.

6. Enter the name of the Federal agency making the award or loan commitment. Include at least one organizational level below agency name, if known. For example, Department of Transportation, United States Coast Guard.

7. Enter the Federal program name or description for the covered Federal action (item 1). If known, enter the full Catalog of Federal Domestic Assistance (CFDA) number for grants, cooperative agreements, loans, and loan commitments.

8. Enter the most appropriate Federal identifying number available for the Federal action identified in item 1 (e.g., Request for Proposal (RFP) number; invitation for Bid (IFB) number, grant announcement number; the contract, grant, or loan award number; the application/proposal control number assigned by the Federal agency). Include prefixes, e.g., ''RFP–DE–90–001.''

9. For a covered Federal action where there has been an award or loan commitment by the Federal agency, enter the Federal amount of the award/loan commitment for the prime entity identified in item 4 or 5.

10. (a) Enter the full name, address, city, State and zip code of the lobbying registrant under the Lobbying Disclosure Act of 1995 engaged by the reporting entity identified in item 4 to influence the covered Federal action.

(b) Enter the full names of the individual(s) performing services, and include full address if different from 10(a). Enter Last Name, First Name, and Middle Initial (MI).

11. The certifying official shall sign and date the form, print his/her name, title, and telephone number.

According to the Paperwork Reduction Act, as amended, no persons are required to respond to collection of information unless it displays a valid OMB Control Number. The valid OMB control number of this information collection is OMB No. 0348–0046. Public reporting burden for this collection of information is estimated to average 10 minutes per response, including time for reviewing instructions, searching existing data sources, gathering and maintaining the data needed, and completing and reviewing the collection of information. Send comments regarding the burden estimate or any other aspect of this collection of information, including suggestions for reducing this burden, to the Office of Management and Budget, Paperwork Reduction Project (0348–0046), Washington, DC 20503.

Attachment F— Administration for Children and Families, U.S. Department of Health and Human Services

Certification Regarding Maintenance of Effort

In accordance with the applicable program statute(s) and regulation(s), the undersigned certifies that financial assistance provided by the Administration for Children and Families, for the specified activities to be performed under the _____Program by_____(Applicant Organization), will be in addition to, and not in substitution for, comparable activities previously carried on without Federal assistance.

_____

Signature of Authorized Certifying Official

_____

Title

_____

Date

Attachment G—HHS CFR Title 45

Part 76, Appendix C: Drug-free Certification

Governmentwide Debarment and Suspension (Nonprocurement) and Governmentwide Requirements for Drug-Free Workplace (Grants)

Certification Regarding Drug-Free Workplace Requirements

Instructions for Certification

1. By signing and/or submitting this application or grant agreement, the grantee is providing the certification set out below.

2. The certification set out below is a material representation of fact upon which reliance is placed when the agency awards the grant. If it is later determined that the grantee knowingly rendered a false certification, or otherwise violates the requirements of the Drug-Free Workplace Act, the agency, in addition to any other remedies available to the Federal Government, may take action authorized under the Drug-Free Workplace Act.

3. For grantees other than individuals, Alternate I applies.

4. For grantees who are individuals, Alternate II applies.

5. Workplaces under grants, for grantees other than individuals, need not be identified on the certification. If known, they may be identified in the grant application. If the grantee does not identify the workplaces at the time of application, or upon award, if there is no application, the grantee must keep the identity of the workplace(s) on file in its office and make the information available for Federal inspection. Failure to identify all known workplaces constitutes a violation of the grantee's drug-free workplace requirements.

6. Workplace identifications must include the actual address of buildings (or parts of buildings) or other sites where work under the grant takes place. Categorical descriptions may be used (e.g., all vehicles of a mass transit authority or State highway department while in operation, State employees in each local unemployment office, performers in concert halls or radio studios).

7. If the workplace identified to the agency changes during the performance of the grant, the grantee shall inform the agency of the change(s), if it previously identified the workplaces in question (see paragraph five).

8. Definitions of terms in the Nonprocurement Suspension and Debarment common rule and Drug-Free Workplace common rule apply to this certification. Grantee's attention is called, in particular, to the following definitions from these rules: Controlled substance means a controlled substance in Schedules I through V of the Controlled Substance Act (21 U.S.C. 812) and as further defined by regulation (21 CFR 1308.11 through 1308.15);

Conviction means a finding of guilt (including a plea of *nolo contendere*) or imposition of sentence, or both, by any judicial body charged with the responsibility to determine violations of the Federal or State criminal drug statutes;

Criminal drug statute means a Federal or non-Federal criminal statute involving the manufacture, distribution, use, or possession of any controlled substance;

Employee means the employee of a grantee directly engaged in the performance of work under a grant, including: (i) All direct charge employees; (ii) All indirect employees unless their impact or involvement is insignificant to the performance of the grant; and (iii) Temporary personnel and consultants who are directly engaged in the performance of work under the grant and who are on the grantee's payroll. This definition does not include workers not on the payroll of the grantee (e.g., volunteers, even if used to meet a matching requirement; consultants or independent contractors not on the grantee's payroll; or employees of subrecipients or subcontractors in covered workplaces).

Certification Regarding Drug-Free Workplace Requirements

Alternate I. (Grantees Other Than Individuals)

1. The grantee certifies that it will continue to provide a drug-free workplace by:

1. Publishing a statement notifying employees that the unlawful manufacture, distribution, dispensing, possession, or use of a controlled substance is prohibited in the grantee's workplace and specifying the actions that will be taken against employees for violation of such prohibition;

2. Establishing an ongoing drug-free awareness program to inform employees about—

1. The dangers of drug abuse in the workplace;

2. The grantee's policy of maintaining a drug-free workplace;

3. Any available drug counseling, rehabilitation, and employee assistance programs; and

4. The penalties that may be imposed upon employees for drug abuse violations occurring in the workplace;

3. Making it a requirement that each employee to be engaged in the performance of the grant be given a copy of the statement required by paragraph (a);

4. Notifying the employee in the statement required by paragraph (a) that, as a condition of employment under the grant, the employee will—

1. Abide by the terms of the statement; and

2. Notify the employer in writing of his or her conviction for a violation of a criminal drug statute occurring in the workplace no later than five calendar days after such conviction;

5. Notifying the agency in writing, within ten calendar days after receiving notice under paragraph (d)(2) from an employee or otherwise receiving actual notice of such conviction. Employers of convicted employees must provide notice, including position title, to every grant officer or other designee on whose grant activity the convicted employee was working, unless the Federal agency has designated a central point for receipt of such notices. Notice shall include the identification number(s) of each affected grant;

6. Taking one of the following actions, within 30 calendar days of receiving notice under paragraph (d)(2), with respect to any employee who is convicted—

1. Taking appropriate personnel action against such an employee, up to and including termination, consistent with the requirements of the Rehabilitation Act of 1973, as amended; or

2. Requiring such employee to participate satisfactorily in a drug abuse assistance or rehabilitation program approved for such purposes by a Federal, State, or local health, law enforcement, or other appropriate agency;

7. Making a good faith effort to continue to maintain a drug-free workplace through implementation of paragraphs (a), (b), (c), (d), (e) and (f).

2. The grantee may insert in the space provided below the site(s) for the performance of work done in connection with the specific grant.

Place of Performance (Street address, city, county, state, zip code).

Check } if there are workplaces on file that are not identified here.

Alternate II. (Grantees Who Are Individuals)—

1. The grantee certifies that, as a condition of the grant, he or she will not engage in the unlawful manufacture, distribution, dispensing, possession, or use of a controlled substance in conducting any activity with the grant;

2. If convicted of a criminal drug offense resulting from a violation occurring during the conduct of any grant activity, he or she will report the conviction, in writing, within 10 calendar days of the conviction, to every grant officer of other designee, unless the Federal agency designates a central point for the receipt of such notices. When notice is made to such a central point, it shall include the identification number(s) of each affected grant.

[55 FR 21690, 21702, May 25, 1990]

Attachment H—Administration for Children and Families, U.S. Department of Health and Human Services

Certification Regarding Environmental Tobacco Smoke

Public Law 103227, Part C Environmental Tobacco Smoke, also knows as the pro Children Act of 1994 (Act), requires that smoking not be permitted in any portion of any indoor routinely owned or leased or contracted for any entity and used routinely or regularly for provision of health, day care, education, or library services to children under the age of 18, if the services are funded by Federal programs either directly or through State or local governments, by Federal grant, contract, loan or loan guarantee. The law does not apply to children's services provided in private residences, facilities funded solely by Medicare or Medicaid funds, and portions of facilities used for impatient drug or alcohol treatment. Failure to comply with the provisions of the law may result in the imposition of a civil monetary penalty of up to $1000 per day and/or the imposition of an administrative compliance order on the responsible entity. By signing and submitting this application the applicant/grantee certifies that it will comply with the requirement of the Act.

The applicant/grantee further agrees that it will require the language of this certification be included in any subawards which contain provisions for the children's services and that all subgrantees shall certify accordingly.

Attachment I—HHS CFR Title 45

Part 76, Appendix A: Debarment Certification (Primary)

Governmentwide Debarment and Suspension (Nonprocurement) and Governmentwide Requirements for Drug-Free Workplace (Grants)

Certification Regarding Debarment, Suspension, and Other Responsibility Matters (Primary Covered Transactions)

Instructions for Certification

1. By signing and submitting this proposal, the prospective primary participant is providing the certification set out below.

2. The inability of a person to provide the certification required below will not necessarily result in denial of participation in this covered transaction. The prospective participant shall submit an explanation of why it cannot provide the certification set out below. The certification or explanation will be considered in connection with the department or agency's determination whether to enter into this transaction. However, failure of the prospective primary participant to furnish a certification or an explanation shall disqualify such person from participation in this transaction.

3. The certification in this clause is a material representation of fact upon which reliance was placed when the department or agency determined to enter into this transaction. If it is later determined that the prospective primary participant knowingly rendered an erroneous certification, in addition to other remedies available to the Federal Government, the department or agency may terminate this transaction for cause of default.

4. The prospective primary participant shall provide immediate written notice to the department or agency to whom this proposal is submitted if at any time the prospective primary participant learns that its certification was erroneous when submitted or has become erroneous by reason of changed circumstances.

5. The terms covered transaction, debarred, suspended, ineligible, lower tier covered transaction, participant, person, primary covered transaction, principal, proposal, and voluntarily excluded, as used in this clause, have the meanings set out in the Definitions and Coverage sections of the rules implementing Executive Order 12549. You may contact the department or agency to which this proposal is being submitted for assistance in obtaining a copy of those regulations.

6. The prospective primary participant agrees by submitting this proposal that, should the proposed covered transaction be entered into, it shall not knowingly enter into any lower tier covered transaction with a person who is debarred, suspended, declared ineligible, or voluntarily excluded from participation in this covered transaction, unless authorized by the department or agency entering into this transaction.

7. The prospective primary participant further agrees by submitted this proposal that it will include the clause titled ''Certification Regarding Debarment, Suspension, Ineligibility and Voluntary Exclusion—Lower

Tier Covered Transaction,'' provided by the department or agency entering into this covered transaction, without modification, in all lower tier covered transactions and in all solicitations for lower tier covered transactions.

8. A participant in a covered transaction may rely upon a certification of a prospective participant in a lower tier covered transaction that it is not debarred, suspended, ineligible, or voluntarily excluded from the covered transaction, unless it knows that the certification is erroneous. A participant may decide the method and frequency by which it determines the eligibility of its principals. Each participant may, but is not required to, check the Nonprocurement List (Tel. 1B).

9. Nothing contained in the foregoing shall be construed to require establishment of a system of records in order to render in good faith the certification required by this clause. The knowledge and information of a participant is not required to exceed that which is normally possessed by a prudent person in the ordinary course of business dealings.

10. Except for transactions authorized under paragraph 6 of these instructions, if a participant in a covered transaction knowingly enters into a lower tier covered transaction with a person who is suspended, debarred, ineligible, or voluntarily excluded from participation in this transaction, in addition to other remedies available to the Federal Government, the department or agency may terminate this transaction for cause or default.

Certification Regarding Debarment, Suspension, and Other Responsibility Matters—Primary Covered Transactions

1. The prospective primary participant certifies to the best of its knowledge and belief, that it and its principals:

1. Are not presently debarred, suspended, proposed for debarment, declared ineligible, or voluntarily excluded from covered transactions by any Federal department or agency;

2. Have not within a three-year period preceding this proposal been convicted of or had a civil judgment rendered against them for commission of fraud or a criminal offense in connection with obtaining, attempting to obtain, or performing a public (Federal, State or local) transaction or contract under a public transaction; violation of Federal or State antitrust statutes or commission of embezzlement, theft, forgery, bribery, falsification or destruction of records, making false statements, or receiving stolen property;

3. Are not presently indicted for or otherwise criminally or civilly charged by a governmental entity (Federal, State or local) with commission of any of the offenses enumerated in paragraph (1)(b) of this certification; and

4. Have not within a three-year period preceding this application/proposal had one or more public transactions (Federal, State or local) terminated for cause or default.

2. Where the prospective primary participant is unable to certify to any of the statements in this certification, such prospective participant shall attach an explanation to this proposal.

Attachment J—State Single Point of Contact Listing Maintained by OMB

In accordance with Executive Order #12372, ''Intergovernmental Review of Federal Programs,'' Section 4, ''the Office of Management and Budget (OMB) shall maintain a list of official State entities designated by the States to review and coordinate proposed Federal financial assistance and direct Federal development,'' This attached listing is the OFFICIAL OMB LISTING. This listing is also published in the Catalogue of Federal Domestic Assistance biannually.

*OMB State Single Point of Contact Listing**

Arizona

Joni Saad, Arizona State Clearinghouse, 3800 N. Central Avenue, Fourteenth Floor, Phoenix, Arizona 85012, Telephone: (602) 280–1315, FAX: (602) 280–8144, e-mail: jonis@ep.state.az.us

Arkansas

Mr. Tracy L. Copeland, Manager, State Clearinghouse, Office of Intergovernmental Services, Department of Finance and Administration, 1515 W. 7th St., Room 412, Little Rock, Arkansas 72203, Telephone: (501) 682–1074, FAX: (501) 682–5206

California

Grants Coordinator, Office of Planning and Research/State Clearinghouse, 1400 10th Street, Room 121, Sacramento, California 95814, Telephone: (916) 323–7480, FAX: (916) 323–3018

Delaware

Francine Booth, State Single Point of Contact, Executive Department, Office of the Budget, 540 S. duPont Hi., Suite 5, Dover, Delaware 19901, Telephone: (302) 739–3326, FAX: (302) 739–5661

District of Columbia

Charles Nichols, State Single Point of Contact, Office of Grants Management and Development, 717 14th Street, N.W.—Suite 1200, Washington, D.C. 20005, Telephone: (202) 727–6537, FAX: (202) 727–1617, e-mail: charlesnic@yahoo.com or cnichols-ogmd@dcgov.org

Florida

Cherie L. Trainor, Coordinator, Florida State Clearinghouse, Department of Community Affairs, 2555 Shumard Oak Boulevard, Tallahassee, Florida 32399–2100, Telephone: (850) 922–5438 or (850) 414–5495, FAX: (850) 414–0479, e-mail: cherie.trainor@dca.state.fl.us

Georgia

Debra S. Stephens, Coordinator, Georgia State Clearinghouse, 270 Washington Street, S.W.—8th Floor, Atlanta, Georgia 30334, Telephone: (404) 656–3855, FAX: (404) 656–7901, e-mail: ssda@mail.opb.state.ga.us

Illinois

Virginia Bova, State Single Point of Contact, Illinois Department of Commerce and Community Affairs, James R. Thompson Center, 100 West Randolph, Suite 3–400, Chicago, Illinois 60601, telephone: (312) 814–6028, FAX: (312) 814–1800.

Indiana

Frances Williams, State Budget Agency, 212 State House, Indianapois, Indiana 46204–2796, Telephone: (317) 232–5619, FAX: (317) 233–3323

Iowa

Steven R. McCann, Division for Community Assistance, Iowa Department of Economic Development, 200 East Grand Avenue, Des Moines, Iowa 50309, Telephone: (515) 242–4719, FAX: (515) 242–4809

Kentucky

Kevin J. Goldsmith, Director, John-Mark Hack, Deputy Director, Sandra Brewer, Executive Secretary, Intergovernmental Affairs, Office of the Governor, 700 Capitol Avenue, Frankfort, Kentucky 40601, Telephone: (502) 564–2611, FAX: (502) 564–2849.

Maine

Joyce Benson, State Planning Office, 184 State Street, 38 State House Station, Augusta, Maine 04333, Telephone: (207) 287–3261, FAX: (207) 287–6489.

Maryland

Linda C. Janey, JD, Manager, Clearinghouse and Plan Review Unit, Maryland Office of Planning, 301 W. Preston Street—Room 1104, Baltimore, Maryland 21201–2305, Telephone: (410) 767–4491, FAX: (410) 767–4480, e-mail: Linda@mail.op.state.md.us

Michigan

Richard Pfaff, Southeast Michigan Council of Governments, 660 Plaza Drive—Suite 1900, Detroit, Michigan 48226, Telephone: (313) 961–4266, FAX: (313) 961–4869.

Mississippi

Cathy Mallette, Clearinghouse Officer, Department of Finance and Administration, 455 North Lamar Street, Jackson, Mississippi 39202–3087, Telephone: (601) 359–6762, FAX: (601) 359–6764.

Missouri

Lois Pohl/Carol Meyer, Federal Assistance Clearinghouse, Office Of Administration, P.O. Box 809, Room 915, Jefferson Building, Jefferson City, Missouri 65102, Telephone: (573) 751–4834, FAX: (573) 522–4395.

* In accordance with Executive Order #12372, ''Intergovernmental Review of Federal Programs,'' this listing represents the designated State Single Points of Contact. The jurisdictions not listed no longer participate in the process BUT GRANT APPLICANTS ARE STILL ELIGIBLE TO APPLY FOR THE GRANT EVEN IF YOUR STATE, TERRITORY, COMMONWEALTH, ETC. DOES NOT HAVE A ''STATE SINGLE POINT OF CONTACT.'' JURISDICTIONS WITHOUT ''STATE SINGLE POINTS OF CONTACTS'' INCLUDE: Alabama; Alaska; American Samoa; Colorado; Connecticut; Kansas; Hawaii, Idaho; Louisiana; Massachusetts; Minnesota; Montana; Nebraska; New Jersey; Ohio; Oklahoma; Oregon; Palau; Pennsylvania; South Dakota; Tennessee; Vermont; Virginia; and Washington.

Nevada

Heather Elliott, Department of Administration, State Clearinghouse, Capitol Complex, Carson City, Nevada 89710, Telephone: (702) 687–6367, FAX: (702) 687–3983

New Hampshire

Jeffrey H. Taylor, Director, New Hampshire Office of State Planning, Attn: Intergovernmental Review Process, Mike Blake, Office of State Planning, 2½ Beacon Street, Concord, New Hampshire 03301, Telephone: (603) 271–2155, FAX: (603) 271–1728

New Mexico

Nick Mandell, Local Government Division, Room 201, Bataan Memorial Building, Santa Fe, New Mexico 87503, Telephone: (505) 827–4991, FAX: (505) 827–4948

New York

New York State Clearinghouse, Division of the Budget, State Capitol, Marsha Roth, Albany, New York 12224, Telephone: (518) 474–1605, FAX: (518) 486–5617

North Carolina

Chrys Baggett, Director, North Carolina State Clearinghouse, Office of the Secretary of Administration, 116 West Jones Street, Suite 5106, Raleigh, North Carolina 27603–8003, Telephone: (919) 733–7232, FAX: (919) 733–9571

North Dakota

Jim Boyd, North Dakota Single Point of Contact, Office of Intergovernmental Assistance, 600 East Boulevard Avenue, Department 105, Bismarck, North Dakota 58505–0170, Telephone: (701) 328–2094, FAX: (701) 328–2308

Rhode Island

Kevin Nelson, Review Coordinator, Department of Administration, Division of Planning, One Capitol Hill, 4th Floor, Providence, Rhode Island 02908–5870, Telephone: (401) 222–2656, FAX: (401) 222–2083

South Carolina

Omegia Burgess, State Single Point of Contact, Budget and Control Board, Office of State Budget, 1122 Ladies Street, 12th Floor, Columbia, South Carolina 29201, Telephone: (803) 734–0494, FAX: (803) 734–0645

Texas

Tom Adams, Single Point of Contact, State of Texas, Governor's Office of Budget and Planning, Director, Intergovernmental Coordination, P.O. Box 12428, Austin, Texas 78711–2428, Telephone: (512) 463–1771, FAX: (512) 936–2681, e-mail: tadams@governor.state.tx.us

Utah

Carolyn Wright, Utah State Clearinghouse, Office of Planning and Budget, Room 116 State Capitol, Salt Lake City, Utah 84114, Telehpone: (801) 538–1535, FAX: (801) 538–1547

West Virginia

Judith Dryer, Chief Program Manager, West Virginia Development Office, Building #6, Room 645, State Capitol, Charleston, West Virginia 25305, Telephone: (304) 558–0350, FAX: (304) 558–0362

Wisconsin

Jeff Smith, Section Chief, State/Federal Relations, Wisconsin Department of Administration, 101 East Wilson Street—6th Floor, P.O. Box 7868, Madison, Wisconsin 53707, Telephone: (608) 266–0267, FAX: (608) 267–6931

Wyoming

Matthew Jones, State Single Point of Contact, Office of the Governor, 200 West 24th Street, State Capital, Room 124, Cheyenne, Wyoming 82002 FAX: (307) 632–3909

Territories

Guam

Mr. Giovanni T. Sgambelluri, Director, Bureau of Budget and Management Research, Office of the Governor, P.O. Box 2950, Agana, Guam 96910, Telephone: 011–671–472–2285, FAX: 011–671–472–2825

Puerto Rico

Norma Burgos/Jose E. Caro, Chairwoman/Director, Puerto Rico Planning Board, Federal Proposals Review Office, Minillas Government Center, P.O. Box 41119, San Juan, Puerto Rico 00940–1119, Telephone: (809) 727–4444 or (809) 723–6190, FAX: (809) 724–3270 or (809) 724–3103

Northern Mariana Islands

Mr. Alvaro A. Santos, Executive Officer, Office of Management and Budget, Office of the Governor, Saipan, MP 96950, Telpehone: (670) 664–2256, FAX: (670) 664–2272

Please direct all questions and correspondence about intergovernmental review to:

Ms. Jacoba T. Seman, Federal Programs Coordinator, Telephone: (670) 664–2289, FAX: (670) 664–2272

Virgin Islands

Nellon Bowry, Director, Office of Managment and Budget, #41 Norregade Emancipation Garden Station, Second Floor, Saint Thomas, Virgin Islands 00802

Please direct all questions and correspondence about intergovernmental review to:

Daisey Millen, Telephone: (809) 774–0750 FAX: (809) 776–0069

If you would like a copy of this list faxed to your office, please call our publications office at: (202) 395–9068.

This list is based on the most current information provided by the States. Information on any changes or apparent errors should be provided to the Office of Management and Budget and the State in question. Changes to the list will only be made upon formal notification by the State. Also, this listing is published biannually in the Catalogue of Federal Domestic Assistance.

Attachment K—DHHS Regulations Applying to all Applicants/Grantees Under the Assets for Independence Demonstration Program (IDA Program)

Title 45 of the Code of Federal Regulations:

Part 16—Department of Grant Appeals Process

Part 74—Administration of Grants (grants with subgrants to entities)

Part 75—Informal Grant Appeal Procedures

Part 76—Debarment and Suspension from Eligibility for Financial Assistance

Subpart F—Drug Free Workplace Requirements

Part 80—Non-Discrimination Under Programs Receiving Federal Assistance through the Department of Health and Human Services Effectuation of Title VI of the Civil Rights Act of 1964

Part 81—Practice and Procedures for Hearings Under Part 80 of this Title

Part 83—Regulation for the Administration and Enforcement of Sections 799A and 845 of the Public Health Service Act

Part 84—Non-discrimination on the Basis of Handicap in Programs and Activities Receiving Federal Financial Assistance

Part 85—Enforcement of Non-Discrimination on the Basis of Handicap in Programs or Activities Conducted by the Department of Health and Human Services

Part 86—Nondiscrimination on the Basis of Sex in Education Programs and Activities Receiving or Benefiting from Federal Financial Assistance

Part 91—Non-discrimination on the Basis of Age in Health and Human Services Programs or Activities Receiving Federal Financial Assistance

Part 92—Uniform Administrative Requirements for Grants and Cooperative Agreements to States and Local Governments (**Federal Register,** March 11, 1988)

Part 93—New Restrictions on Lobbying Part 100—Intergovernmental Review of Department of Health and Human Services Programs and Activities

[FR Doc. 99–16721 Filed 7–1–99; 8:45 am]

BILLING CODE 4184–01–M

federal register

Friday
July 2, 1999

Part V

Department of Housing and Urban Development

24 CFR Part 291

Disposition of HUD-Acquired Single Family Property; Officer Next Door Sales Program; Final Rule

DEPARTMENT OF HOUSING AND URBAN DEVELOPMENT

24 CFR Part 291

[Docket No. FR–4277–I–02]

RIN 2502–AH37

Disposition of HUD-Acquired Single Family Property; Officer Next Door Sales Program

AGENCY: Office of the Assistant Secretary for Housing-Federal Housing Commissioner, HUD.

ACTION: Interim rule.

SUMMARY: This interim rule amends HUD's regulations that address the disposition of HUD-acquired single family properties to codify the policies and procedures concerning the Officer Next Door Sales Program (OND Sales Program). The OND Sales Program has been operating since August 11, 1997 as a temporary program. This interim rule establishes the OND Sales Program as a permanent part of HUD's single family property disposition program. Through the OND Sales Program, HUD makes HUD-acquired single family homes available to law enforcement officers for purchase at a discount from the list price. A home purchased through the OND Sales Program must be located in a HUD-designated Revitalization Area or HUD-approved exception area, and the law enforcement officer must agree to own and live in the home as his or her sole residence for a specified period of time. Governmental entities and private nonprofit organizations may also purchase homes through the OND Sales Program, if they intend to resell these homes directly to law enforcement officers under the terms and conditions of the OND Sales Program.

DATES: Effective Date: August 2, 1999.

Comments Due Date: August 31, 1999.

ADDRESSES: Interested persons are invited to submit comments regarding this interim rule to the Rules Docket Clerk, Office of the General Counsel, Room 10276, U.S. Department of Housing and Urban Development, 451 Seventh Street, SW, Washington, DC 20410–0500. Comments should refer to the above docket number and title. A copy of each comment submitted will be available for public inspection and copying between 7:30 am and 5:30 pm weekdays at the above address. Facsimile (FAX) comments will not be accepted.

FOR FURTHER INFORMATION CONTACT: Joe McCloskey, Director, Single Family Asset Management Division, Office of Insured Single Family Housing, Room 9286, U.S. Department of Housing and Urban Development, 451 Seventh Street, SW, Washington, DC 20410–8000; telephone (202) 708–1672 (this is not a toll-free number). Hearing-or speech-impaired individuals may access this number via TTY by calling the toll-free Federal Information Relay Service at (800) 877–8339.

SUPPLEMENTARY INFORMATION:

I. Background

One of HUD's major goals is to use its resources in a manner that enhances the general well-being of American communities. A critical component of the Nation's housing policy is promoting safe neighborhoods. One means of furthering this policy is to create homeownership opportunities for law enforcement officers, charged with the responsibility of ensuring the safety and well-being of residents, in the communities they serve. A second means is to help promote safe neighborhoods by furthering the community policing efforts being made by numerous cities. In order to support these efforts, HUD developed the Officer Next Door Sales Program (OND Sales Program).

HUD initiated the OND Sales Program on August 11, 1997, through the issuance of HUD Notice H–97–51. On December 31, 1997, HUD issued Notice H–97–73, which expanded the definition of law enforcement officer in order to increase the number of law enforcement officers eligible to participate in the OND Sales Program. On January 12, 1998 (63 FR 1886) a notice was published in the **Federal Register** that described the OND Sales Program policies and procedures contained in HUD Notices H–97–51 and H–97–53.

Since 1997, the OND Sales Program has been operated as a temporary program under HUD's authority to make single family properties available under 24 CFR part 291 (entitled ''Disposition of HUD-Acquired Single Family Property'') and through a series of regulatory waivers authorized by the Assistant Secretary for Housing-Federal Housing Commissioner. Section 7(q) of the Department of Housing and Urban Development Act, as amended by section 106 of the Department of Housing and Urban Development Reform Act (42 U.S.C. 3535(q)), requires that HUD publish quarterly **Federal Register** notices of all regulatory waivers it has approved. The latest regulatory waiver issued by HUD regarding the OND Sales program was published on March 12, 1999 (64 FR 12676, 12678).

II. The OND Sales Program

Through the OND Sales Program, HUD makes HUD-acquired single family homes, located in HUD-designated Revitalization Areas or HUD-approved exception areas, available to law enforcement officers for purchase at a substantial discount from the list price. Currently the discount rate for the OND Sales Program is 50% off the list price.

In addition, by allowing selected homes to be purchased with mortgages insured by the Federal Housing Administration (FHA), HUD makes it possible for a law enforcement officer to purchase a home with a very low down payment. In order to qualify for this low down payment, a selected home must be eligible for FHA financing. Currently, law enforcement officers may purchase an FHA eligible home with an FHA-insured mortgage, through the OND Sales Program, with a downpayment of $100.

A law enforcement officer is defined, under the OND Sales Program, as (1) an individual who is employed full-time by a Federal, state, county, or municipal government and in carrying out such full-time employment is (2) sworn to uphold, and make arrests for violations of, Federal, state, county, or municipal law. A law enforcement officer, participating in the OND Sales program, must agree to own and live in the home as his or her sole residence for a set period of time. This period of time is called the owner-occupancy term. Currently, the owner-occupancy term is 3 years. The law enforcement officer must also agree to certify initially and once annually, for each year of the owner-occupancy term, that (1) he or she owns and lives in the home as his or her sole residence and that (2) he or she does not own any other residential real property other than the home purchased through the OND Sales Program.

In addition, law enforcement officers will have to agree to execute a second mortgage and note on the home. Under the second mortgage, the law enforcement officer will not be required to make any monthly payments, nor will any interest accrue. This second mortgage will have the same term as the owner-occupancy term. The amount of the second mortgage will be the difference between the list price of the home and the discounted selling price. The amount owed on the second mortgage will be reduced, according to a schedule established by HUD, periodically over the owner-occupancy term. At the end of the owner-occupancy term, the amount of the second mortgage will be zero. If a law

enforcement officer fails to meet any of the continuing obligations of the OND Sales Program, he or she will owe HUD the amount due on the second mortgage. In addition, HUD may take one or more actions, including but not limited to: (1) issuance of a limited denial of participation for FHA programs, (2) referral to the HUD Inspector General for investigation, and (3) reporting to the law enforcement officer's employing agency.

Governmental entities and private nonprofit organizations may also purchase homes through the OND Sales Program, if they intend to resell these homes directly to law enforcement officers under the terms and conditions of the OND Sales Program. Governmental entities and private nonprofit organizations may participate in the OND Sales Program by either (1) assigning the sales contract to a qualified law enforcement officer before or at the time of closing or (2) participating in a three party closing with the qualified law enforcement officer.

III. For More Information About the OND Sales Program

Law enforcement officers, governmental entities, private nonprofit organizations, and other interested persons can receive more information about the OND Sales Program by calling (800) 217–6970 or by visiting HUD's Web site at http://www.hud.gov.

IV. Changes From the January 12, 1998 Federal Register Notice

This interim rule reflects the following changes to the OND Sales Program as it was described in the January 12, 1998 **Federal Register** notice:

A. Second Mortgage

To qualify to purchase a home through the OND Sales Program, a law enforcement officer must agree to execute a second mortgage and note. Previously, the OND Sales Program only required the inclusion of a covenant in the deed. If a law enforcement officer fails to meet the continuing obligations of the OND Sales Program, the amount of the second mortgage will be due and payable. The amount of the second mortgage will be reduced, according to a schedule established by HUD, periodically over the owner-occupancy term.

B. Initial and Annual Certification

In order to continue to be eligible for the OND Sales Program, a law enforcement officer must certify initially and once annually, for each year of the owner-occupancy term, that he or she continues to own and live in the home as his or her sole residence, and that the law enforcement officer does not own any other residential real property.

C. Multiple Homes

During the entire duration of the owner-occupation term, a law enforcement officer may not own any other residential real property other than the home purchased through the OND Sales Program.

D. Single-Unit Homes

Only single-unit homes are eligible for purchase through the OND Sales Program.

V. This Interim Rule

This interim rule establishes the OND Sales Program as a permanent part of HUD's single family property disposition program. Specifically, the interim rule creates a new subpart F in 24 CFR part 291 that codifies the policies and procedures concerning the OND Sales Program.

VI. Justification for Interim Rulemaking

HUD generally publishes a rule for public comment before issuing a rule for effect, in accordance with its own regulations on rulemaking at 24 CFR part 10. Part 10 provides for exceptions to the general rule if the agency finds good cause to omit advance notice and public participation. The good cause requirement is satisfied when prior public procedure is ''impracticable, unnecessary, or contrary to the public interest'' (24 CFR 10.1). For the following reasons, HUD finds that good cause exists to publish this rule for effect without first soliciting public comment.

The OND Sales Program has been operating as a temporary program since August 11, 1997, using HUD's existing authority under the single family property disposition program regulations at 24 CFR part 291 and through the issuance of a series of waivers. In addition, HUD published the January 12, 1998 **Federal Register** notice publicizing the details of the OND Sales Program.

While this interim rule makes certain revisions to the OND Sales Program, the basic structure of the program remains principally unchanged from that published in the January 12, 1998 **Federal Register** notice. The primary purpose of this interim rule is to change the status of the OND Sales Program from a temporary program to a permanent part of HUD's single family property disposition program. The interim rule codifies the current policies and procedures concerning the OND Sales Program in a new subpart F in 24 CFR part 291. Accordingly, HUD has determined that it is unnecessary to solicit prior notice and comment before issuing this rule for effect.

Although HUD is issuing this rule for effect, it welcomes public comment on the amendments made by the rule. HUD has, therefore, issued these regulations on an interim basis and has provided the public with a 60-day comment period. All public comments will be addressed in the final rule.

VII. Findings and Certifications

Unfunded Mandates Reform Act

Title II of the Unfunded Mandates Reform Act of 1995 (2 U.S.C. 1531–1538)(UMRA) requires Federal agencies to assess the effects of their regulatory actions on State, local, and tribal governments and on the private sector. This interim rule does not impose any Federal mandates on any State, local, or, tribal governments, or on the private sector, within the meaning of UMRA.

Environmental Impact

A Finding of No Significant Impact with respect to the environment has been made in accordance with the HUD regulations at 24 CFR part 50 that implement section 102(2)(C) of the National Environmental Policy Act of 1969 (Pub. L. 91–190, 83 Stat. 852, 853, codified as amended at 42 U.S.C. 4332). The Finding of No Significant Impact is available for public inspection and copying during regular business hours (7:30 a.m. to 5:30 p.m.) in the Office of the Rules Docket Clerk, Room 10276, U.S. Department of Housing and Urban Development, 451 Seventh Street, SW, Washington, DC 20410–0500.

Impact on Small Entities

The Secretary, in accordance with the Regulatory Flexibility Act (5 U.S.C. 605(b)), has reviewed and approved this interim rule and in so doing certifies that this interim rule would not have a significant economic impact on a substantial number of small entities.

This interim rule promotes safe neighborhoods by enabling law enforcement officers to purchase HUD-acquired single family homes at a significant discount. The interim rule places restrictions on the use of a home purchased through the Officer Next Door Sales Program, which affects the individual purchasing the home. The interim rule, however, does not place restrictions on any small entities involved in any transactions related to the Officer Next Door Sales Program.

While we have determined that this rule would not have a significant

economic impact on a substantial number of small entities, we welcome any comments regarding alternatives to this rule that would meet our objectives, as described in this preamble, and would be less burdensome to small entities.

Federalism Impact

The General Counsel, as the Designated Official under section 6(a) of Executive Order 12612 (entitled ''Federalism'') has determined that the policies contained in this interim rule do not have substantial direct effects on States or their political subdivisions, on the relationship between the Federal government and the States, or on the distribution of power and responsibilities among the various levels of government. This interim rule codifies the procedures governing the OND Sales Program in a new subpart in HUD's single family property disposition program regulations. Through the OND Sales Program, HUD makes HUD-acquired single family homes available to law enforcement officers for purchase at a significant discount. As a result, this interim rule is not subject to review under the Order.

List of Subjects in 24 CFR Part 291

Community facilities, Conflict of interests, Homeless, Lead poisoning, Low and moderate income housing, Mortgages, Reporting and recordkeeping requirements, Surplus government property.

Accordingly, for the reasons stated in the preamble, 24 CFR part 291 is amended as follows:

PART 291—DISPOSITION OF HUD-ACQUIRED SINGLE FAMILY PROPERTY

1. The authority citation for 24 CFR part 291 continues to read as follows:

Authority: 12 U.S.C. 1701 *et seq.*; 42 U.S.C. 1441, 1441a, 1551a, and 3535(d).

2. Subpart F is added to read as follows:

Subpart F—Officer Next Door Sales Program

Sec.

291.500 What is the purpose of the Officer Next Door Sales Program?
291.510 How does the Officer Next Door Sales Program work?
291.520 How do I qualify to purchase a home through the Officer Next Door Sales Program?
291.530 Who qualifies as a law enforcement officer?
291.540 What is the owner-occupancy term?
291.550 What is the second mortgage?
291.560 May I purchase a multi-unit property through the Officer Next Door Sales Program if I plan to live in one of the units as my sole residence?
291.570 What continuing obligations apply to me if I purchase a home through the Officer Next Door Sales Program?
291.580 May governmental entities and private nonprofit organizations purchase homes through the Officer Next Door Sales Program?
291.590 How are the terms governmental entities and private nonprofit organization defined?

Subpart F—Officer Next Door Sales Program

§ 291.500 What is the purpose of the Officer Next Door Sales Program?

The purpose of the Officer Next Door Sales Program is to promote safe neighborhoods by encouraging law enforcement officers to purchase, and live in as their sole residence, homes located in economically distressed neighborhoods.

§ 291.510 How does the Officer Next Door Sales Program work?

(a) The Officer Next Door Sales Program enables a full-time law enforcement officer to purchase a HUD-acquired home located in a HUD-designated Revitalization Area or HUD-approved exception area:

(1) At a discount from the list price; and

(2) With a reduced downpayment, if:

(i) The home is eligible for an FHA-insured mortgage; and

(ii) The law enforcement officer chooses to finance the home through an FHA-insured mortgage, and is qualified to obtain such a mortgage.

(b) Under the Officer Next Door sales Program, all properties acquired by HUD (both those that are eligible for FHA mortgage insurance and those that are not eligible) located in HUD-designated Revitalization Areas are made available to interested law enforcement officers, government entities, and nonprofit organizations prior to listing the properties for sale to the general public. Purchasers must notify HUD of their geographic area of interest and will be given five (5) days to indicate their preliminary interest in a specific property as more fully explained in § 291.210(a).

§ 291.520 How do I qualify to purchase a home through the Officer Next Door Sales Program?

To qualify to purchase a home through the Officer Next Door Sales Program you must:

(a) Be a full-time law enforcement officer as described in § 291.530;

(b) Agree to own, and live in as your sole residence, the home for the entire duration of the owner-occupancy term;

(c) Agree to execute a second mortgage and note on the home as described in § 291.550 for the difference between the list price and the discounted selling price;

(d) Agree that you will not own any residential real property, other than the home you purchase through the Officer Next Door Sales Program, during the owner-occupancy period.

§ 291.530 Who qualifies as a law enforcement officer?

You qualify as a law enforcement officer, for the purposes of the Officer Next Door Sales Program, if you are:

(a) Employed full-time by a Federal, state, county, or municipal government; and

(b) In carrying out such full-time employment, you are sworn to uphold, and make arrests for violations of, Federal, state, county, or municipal law.

§ 291.540 What is the owner-occupancy term?

The owner-occupancy term is the number of years a participant in the Officer Next Door Sales Program must agree to own, and live in as their sole residence, a home purchased through the Officer Next Door Sales Program. The owner-occupancy term is determined by HUD.

§ 291.550 What is the second mortgage?

The second mortgage is a mortgage and note on the home you purchase through the Officer Next Door Sales Program. The amount of the second mortgage is the difference between the list price of the home and the discounted selling price. The second mortgage will have the same term as the owner-occupancy term. The amount of the second mortgage will be reduced, according to a schedule established by HUD, periodically over the owner-occupancy term. If you fail to meet any of the continuing obligations of the OND Sales Program, you will owe HUD the amount due on the second mortgage. At the end of the owner-occupancy term, the amount of the second mortgage will be zero.

§ 291.560 May I purchase a multi-unit property through the Officer Next Door Sales Program if I plan to live in one of the units as my sole residence?

No, only single-unit properties are eligible for the Officer Next Door Sales Program.

§ 291.570 What continuing obligations apply to me if I purchase a home through the Officer Next Door Sales Program?

To remain a participant in the Officer Next Door Sales Program you must, for the entire duration of the owner-occupancy term:

(a) Continue to own, and live in as your sole residence, the home you purchased through the Officer Next Door Sales Program;

(b) Not own any other residential real property other than the home you purchased through the Officer Next Door Sales Program; and

(c) Certify initially and once annually that paragraphs (a) and (b) of this section continue to be true.

§ 291.580 May governmental entities and private nonprofit organizations purchase homes through the Officer Next Door Sales Program?

Yes, governmental entities and private nonprofit organizations may purchase homes through the Officer Next Door Sales Program, if they intend to resell these homes directly to law enforcement officers under the terms and conditions of the Officer Next Door Sales Program. In order to participate, governmental entities and private nonprofit organizations must either:

(a) Assign the sales contract to a qualified law enforcement officer before, or at the time of, closing; or

(b) Participate in a three party closing with the qualified law enforcement officer.

§ 291.590 How are the terms governmental entities and private nonprofit organization defined?

The terms *Governmental entities and Private nonprofit organization* are defined in § 291.5 of this part.

Dated: June 8, 1999.

William C. Apgar,

Assistant Secretary for Housing—Federal Housing Commissioner.

[FR Doc. 99–16847 Filed 7–1–99; 8:45 am]

BILLING CODE 4210–27–P

federal register

Friday
July 2, 1999

Part VI

Department of Housing and Urban Development

24 CFR Part 200

Single Family Mortgage Insurance; Appraiser Roster Placement and Removal Procedures; Proposed Rule

DEPARTMENT OF HOUSING AND URBAN DEVELOPMENT

24 CFR Part 200

[Docket No. FR–4429–P–01]

RIN 2502–AH29

Single Family Mortgage Insurance; Appraiser Roster Placement and Removal Procedures

AGENCY: Office of the Assistant Secretary for Housing-Federal Housing Commissioner, HUD.

ACTION: Proposed rule.

SUMMARY: This proposed rule would implement one aspect of HUD's Homebuyer Protection Plan, which was launched on June 1, 1998. The Homebuyer Protection Plan consists, in part, of a number of reforms to the appraisal process for the purchase of single family properties financed with mortgages insured by the Federal Housing Administration (FHA) and certain manufactured homes under the FHA Title I program. This proposed rule would establish an independent removal procedure for HUD's Appraiser Roster. The Appraiser Roster lists appraisers who are eligible to perform FHA single family appraisals. This proposed rule would also codify the current placement procedure for the Appraiser Roster.

DATES: *Comments Due Date:* August 2, 1999.

ADDRESSES: Submit your comments about this proposed rule to the Office of the General Counsel, Rules Docket Clerk, Room 10276, U.S. Department of Housing and Urban Development, 451 Seventh Street, SW, Washington, DC 20410–0500. Your comments should refer to the above docket number and title. We do not accept facsimile (FAX) comments. A copy of each comment submitted will be available for public inspection and copying during regular business hours (7:30 a.m. to 5:30 p.m.) at the above address.

FOR FURTHER INFORMATION CONTACT: Vance T. Morris, Director, Home Mortgage Insurance Division, Office of Insured Single Family Housing, Room 9266, U.S. Department of Housing and Urban Development, 451 Seventh Street, SW, Washington, DC 20410–8000; telephone (202) 708–2700 (this is not a toll-free number). Hearing or speech-impaired individuals may access this number via TTY by calling the toll-free Federal Information Relay Service at (800) 877–8339.

SUPPLEMENTARY INFORMATION:

I. Background

a. HUD's Homebuyer Protection Plan

HUD launched the Homebuyer Protection Plan (the Plan) on June 1, 1998. Among other innovations, the Plan reforms the appraisal process for the purchase of single family properties financed with mortgages insured by the Federal Housing Administration (FHA) and certain manufactured homes under the FHA Title I program. One aspect of the appraisal process that is undergoing reform is HUD's Appraiser Roster. The Appraiser Roster lists appraisers who are eligible to perform FHA single family appraisals. Lenders must select an appraiser from this list for property appraisals involving the FHA single family mortgage insurance program. HUD maintains the Appraiser Roster because the success of the single family mortgage insurance program and HUD's ability to protect its financial interests begin with selecting qualified and knowledgeable appraisers.[1]

b. Appraiser Roster Reforms

The Appraiser Roster reforms that would be implemented by the Homebuyer Protection Plan protect homebuyers by ensuring accurate and complete appraisals of homes purchased through the FHA single family insurance program. An accurate and complete appraisal protects homebuyers by informing them, before they complete the purchase of a home, about any extensive repairs that may be needed to make the home habitable. It is important to note, however, that while HUD is committed to protecting homebuyers, the purpose of an FHA property appraisal is to determine the maximum insurable mortgage and to protect the FHA insurance funds. Consequently, the inclusion of an appraiser on the Appraiser Roster does not create or imply a warranty or endorsement to the prospective homebuyer or to any other organization or individual by HUD of the listed appraiser nor does it represent a warranty of the appraisal performed by the listed appraiser. The inclusion of an appraiser on the Appraiser Roster means only that a listed appraiser has met the qualifications and conditions, prescribed by the Secretary, for placement on the Appraiser Roster.

c. Placement Procedure

This proposed rule would codify in regulations the requirements for placement on the Appraiser Roster. These requirements are currently in place. This rule would merely codify existing practice. To be eligible for placement on the Appraiser Roster, an appraiser must be state-certified or state-licensed and must not be listed on either the General Services Administration's Suspension and Debarment List, HUD's Limited Denial of Participation List, or HUD's Credit Alert Interactive Voice Response System. In addition, the appraiser must also pass a HUD test on FHA appraisal methods and reporting.

To apply for placement on the Appraiser Roster, the appraiser must submit an application to HUD. To verify that the appraiser is eligible to perform HUD/FHA appraisals, HUD performs a detailed review of the appraiser's professional qualifications and checks for any negative information. If HUD's review of an appraiser's application demonstrates that the appraiser is qualified to be listed on the Roster, the appraiser is placed on the Roster. Appraisers that are listed on the Appraiser Roster are responsible for obtaining and complying with the HUD Appraiser Handbook (4150.2) (and any updates to the handbook) and all other instructions and standards issued by HUD.

d. Removal Procedure

An appraiser who is eligible to perform HUD/FHA appraisals is hired by the lender and, therefore, has a contractual responsibility to that lender. However, the appraiser also provides services for HUD programs and, therefore, the appraiser also has an obligation to perform appraisal services that meet HUD's standards and requirements. This dual responsibility of the appraiser is recognized in HUD's review and reporting requirements. The lender and appraiser must meet their respective obligations as prescribed by HUD. Failure to comply with appraiser obligations merits removal from the Appraiser Roster.

This proposed rule would establish an independent procedure by which an appraiser listed on HUD's Appraiser Roster may be removed from the Roster. HUD is proposing this independent removal procedure, in addition to HUD's existing debarment, suspension, and limited denial of participation remedies, in order to better safeguard the FHA insurance funds and to better protect homebuyers. The removal procedure would provide a less lengthy process that would be specifically targeted towards the Appraiser Roster and would fully protect appraisers' due process rights.

[1] In the future, HUD plans that the Appraiser Roster will be administered by HUD's Real Estate Assessment Center.

It should be noted that HUD had previously issued regulations that governed appraiser removal from the Roster at 24 CFR 267.8(d)(3). These regulations were revised during HUD's regulation streamlining in 1996. HUD had intended to retain a less formal procedure for removal from the Roster, but the procedure was not issued during the streamlining. This proposed rule would reinstate this less formal procedure. The procedure included in this proposed rule, however, would provide greater protection for appraisers than the procedure previously located at 24 CFR 267.8(d)(3).

This proposed rule would amend HUD's regulations at 24 CFR part 200 (entitled ''Introduction to FHA Programs'') to add a new subpart G (entitled ''Appraiser Roster; Placement and Removal Procedures'') covering the placement and removal of appraisers from the Roster. Subpart G (which would consist entirely of new § 200.200, entitled ''Appraiser Roster; placement and removal procedures'') would allow HUD to remove an appraiser from the Roster at any time for cause. Cause would include, but would not be limited to:

—Significant deficiencies in appraisals;
—Failing to maintain standing as a state-certified or state-licensed appraiser;
—Prosecution for committing, attempting to commit, or conspiring to commit fraud, misrepresentation, or any other offense that may reflect on the appraiser's character or integrity;
—Failing to perform appraisal functions in accordance with instructions and standards issued by HUD;
—Failing to comply with any agreement made between the appraiser and HUD or with any certification made by the appraiser;
—Being issued a final debarment, suspension, or limited denial of participation;
—Failure to maintain eligibility requirements for placement on the Appraiser Roster as described in new § 200.200 or any other instructions or standards issued by HUD; or
—Failure to comply with HUD-imposed education sanctions within the specified period for complying with such education sanctions.

The removal procedure proposed by this rule would be an independent removal procedure. The removal procedure would apply only to removal actions taken under § 200.200. The procedure would not apply in any way to removal actions taken under any other authority available to HUD, nor would the procedure set forth in § 200.200(d)(2) (entitled ''Procedure for removal'') be available to appraisers in debarment, suspension, or limited denial of participation actions. Furthermore, the proposed rule would require the automatic removal from the Appraiser Roster of an appraiser, if the appraiser has been issued a final debarment, suspension, or limited denial of participation. Under these circumstances, the procedure set forth in § 200.200(d)(2) would not be applicable.

Except in the above case, the removal procedure proposed by this rule would require HUD to give an appraiser written notice of a proposed decision to remove the appraiser from the Roster. This notice would include the reasons for the removal and the duration of the removal. The appraiser would then be given 20 days from the date of the removal notice to submit a written response. During this period, the appraiser would also have the right to request a conference. Requests for a conference would have to be in writing and submitted along with a written response.

Within 30 days of receiving a written response, or if the appraiser requests a conference, within 30 days of the completion of the conference, a HUD official, designated by the Secretary, would review the appraiser's appeal and send the appraiser a final decision either affirming, modifying, or cancelling the removal from the Appraiser Roster. The HUD official designated by the Secretary to review the appraiser's appeal would not be someone involved in HUD's initial removal decision nor would it be someone who reports to a person involved in that initial decision.

If the appraiser does not submit a written response within 20 days, the removal would become effective 20 days after the date of HUD's initial removal notice. If the appraiser submits a written response, and the removal decision is affirmed or modified, the removal would become effective on the date of HUD's notice affirming or modifying its initial removal decision.

The proposed addition of § 200.200 would not prohibit HUD from debarring, suspending, issuing a limited denial of participation, seeking a false claims action, taking such other action against an appraiser as provided for in 24 CFR part 24 (entitled ''Government Debarment and Suspension and Governmentwide Requirements for Drug-Free Workplace (Grants)''), or from seeking any other remedy against an appraiser available to HUD by statute or otherwise. In some cases, where there is evidence that an appraiser is deficient in FHA appraisal requirements, HUD may require an appraiser to undergo professional training and retake the HUD test on FHA appraisal methods and reporting.

With respect to removing an appraiser from the Appraiser Roster, or taking other appropriate enforcement action against an appraiser, HUD is cognizant that section 222 of the Small Business Regulatory Enforcement Fairness Act of 1996 (Public Law 104–121, 110 Stat. 847)(''SBREFA'') requires the Small Business and Agriculture Regulatory Enforcement Ombudsman to ''work with each agency with regulatory authority over small businesses to ensure that small business concerns that receive or are subject to an audit, on-site inspection, compliance assistance effort or other enforcement related communication or contact by agency personnel are provided with a means to comment on the enforcement activity conducted by this personnel.'' To implement this statutory provision, the Small Business Administration has requested that agencies include the following language on agency publications and notices that are provided to small businesses concerns at the time the enforcement action is undertaken. The language is as follows:

Your Comments Are Important

The Small Business and Agriculture Regulatory Enforcement Ombudsman and 10 Regional Fairness Boards were established to receive comments from small businesses about federal agency enforcement actions. The Ombudsman will annually evaluate the enforcement activities and rate each agency's responsiveness to small business. If you wish to comment on the enforcement actions of [insert agency name], call 1–888–REG–FAIR (1–888–734–3247).

As HUD stated in its notice describing HUD's actions on the implementation of SBREFA, which was published on May 21, 1998 (63 FR 28214), HUD intends to work with the Small Business Administration to provide small entities with information on the Fairness Boards and National Ombudsman program, at the time enforcement actions are taken, to ensure that small entities have the full means to comment on the enforcement activity conducted by HUD.

II. Justification for 30-Day Public Comment Period

In accordance with HUD's regulations concerning rulemaking at 24 CFR part 10 (entitled ''Rulemaking: Policy and Procedures''), it is HUD's policy that the public comment period for notices of proposed rulemaking should be 60 days. In the case of this proposed rule,

however, we have determined that there is good cause to reduce the public comment period to 30 days.

This proposed rule would implement part of the Homebuyer Protection Plan, which was launched on June 1, 1998. This Plan reforms FHA's single family home appraisal process and will benefit 800,000 families who obtain FHA-insured mortgage financing each year. One goal of the Plan is to provide these families with the best protection against bad appraisals ever available in the public or private sector.

In light of this important goal, HUD has previously made the public and members of affected industries, including appraisers, aware of the reforms outlined in the Homebuyer Protection Plan. For example, we provided, through HUD Press Release No. 98–206, a thorough overview of the Homebuyer Protection Plan on June 1, 1998. We also met routinely with industry representatives to discuss the details of the Plan and to seek comment and opinion regarding the Plan. While these meetings were held for discussion purposes only, and were not held to reach agreement on HUD policy, they served to make a significant number of affected parties aware of the changes HUD is proposing.

Finally, HUD has made a handbook available that describes the Plan in detail. This handbook has been widely available through the HUD Web Page (http://www.hud.gov/reac/reasfappr.html). Through these means, HUD has alerted appraisers of the changes that would be brought about by the Homebuyer Protection Plan, including the processes by which appraisers may be removed from HUD's Appraiser Roster.

Given the broad exposure of the reforms contained in the Homebuyer Protection Plan, and considering the importance of the Plan's efficient implementation, HUD has determined that a 30-day comment period for this proposed rule should provide sufficient notice and opportunity for interested parties to comment.

III. Findings and Certifications

Paperwork Reduction Act Statement

The information collection requirements contained in this rule have been submitted to the Office of Management and Budget (OMB) under the Paperwork Reduction Act of 1995 (44 U.S.C. 3507(d)) and are pending OMB approval. The information collection requirements were previously published for comment in a separate notice in the **Federal Register** on May 26, 1999 (64 FR 28502). An agency may not conduct or sponsor, and a person is not required to respond to, a collection of information unless the collection displays a valid control number.

Environmental Impact

This proposed rule would establish placement and removal procedures for HUD's Appraiser Roster. Accordingly, under 24 CFR 50.19(c)(1), this proposed rule is categorically excluded from environmental review under the National Environmental Policy Act of 1969 (Pub. L. 91–190, 83 Stat. 852, codified as amended at 42 U.S.C. 4321–4347).

Regulatory Flexibility Act

The Secretary has reviewed this proposed rule before publication, and by approving it certifies, in accordance with the Regulatory Flexibility Act (5 U.S.C. 605(b)), that this proposed rule would not have a significant economic impact on a substantial number of small entities. The proposed rule would establish the procedure by which an appraiser, who has violated FHA single family mortgage insurance program requirements, may be removed from HUD's Appraiser Roster. Accordingly, to the extent that this proposed rule would impact small entities it will be as a result of actions taken by small entities themselves—that is, violation of single family program regulations and requirements.

Generally, HUD expects that the number of removal proceedings initiated under this proposed rule would be relatively low. For example, in fiscal year 1998, of the over 30,000 appraisers listed on the Appraiser Roster, HUD initiated enforcement proceedings against only 36 appraisers (most of these enforcement proceedings were Limited Denial of Participation proceedings).

Further, the proposed rule would provide several procedural safeguards designed to minimize any potential impact on small entities. For example, the rule grants appraisers, selected for removal from the Appraiser Roster, with the opportunity to provide a written response and to request a conference regarding a proposed removal. The rule also specifies that the official designated by HUD to review an appeal may not be the same HUD official involved in the initial removal decision.

While HUD has determined that this rule would not have a significant economic impact on a substantial number of small entities, HUD welcomes any comments regarding alternatives to this rule that would meet HUD's objectives, as described in this preamble, and would be less burdensome to small entities.

Unfunded Mandates Reform Act

Title II of the Unfunded Mandates Reform Act of 1995 (Pub. L. 104–4, 109 Stat. 48, 64, codified at 2 U.S.C. 1531–1538) (UMRA) requires Federal agencies to assess the effects of their regulatory actions on State, local, and tribal governments and on the private sector. This proposed rule does not impose, within the meaning of the UMRA, any Federal mandates on any State, local, or tribal governments or on the private sector.

Federalism Impact

The General Counsel, as the Designated Official under section 6(a) of Executive Order 12612 (entitled ''Federalism''), has determined that the policies contained in this rule will not have substantial direct effects on States or their political subdivisions, on the relationship between the Federal Government and the States, or on the distribution of power and responsibilities among the various levels of government.

List of Subjects in 24 CFR Part 200

Administrative practice and procedure, Claims, Equal employment opportunity, Fair housing, Home improvement, Housing standards, Incorporation by reference, Lead poisoning, Loan programs—housing and community development, Minimum property standards, Mortgage insurance, Organization and functions (Government agencies), Penalties, Reporting and recordkeeping requirements, Social security, Unemployment compensation, Wages.

For the reasons stated in the preamble, HUD proposes to amend 24 part 200 as follows:

PART 200—INTRODUCTION TO FHA PROGRAMS

1. The authority citation for part 200 continues to read as follows:

Authority: 12 U.S.C. 1701–1715z–18; 42 U.S.C. 3535(d).

2. Add subpart G, consisting of § 200.200, to read as follows:

Subpart G—Appraiser Roster; Placement and Removal Procedures

Sec.
200.200 Appraiser Roster; placement and removal procedures.

Subpart G—Appraiser Roster; Placement and Removal Procedures

§ 200.200 Appraiser Roster; placement and removal procedures.

(a) *Appraiser Roster.* HUD maintains a roster of appraisers, and a mortgagee must select an appraiser from this list for the appraisal of properties involving the FHA single family mortgage insurance program.

(b) *Disclaimer.* Since an appraisal is performed to determine the maximum insurable mortgage and to protect the FHA insurance funds, the inclusion of an appraiser on the Appraiser Roster does not create or imply a warranty or endorsement to a prospective homebuyer or to any other organization or individual by HUD of the listed appraiser nor does it represent a warranty of any appraisal performed by the listed appraiser. The inclusion of an appraiser on the Appraiser Roster means only that a listed appraiser has met the qualifications and conditions, prescribed by the Secretary, for inclusion on the Appraiser Roster.

(c) *Placement on the Appraiser Roster*—(1) *Application.* To apply for placement on the Appraiser Roster, you must submit an application to HUD.

(2) *Eligibility.* To be eligible for placement on the Appraiser Roster you must be a state-licensed or state-certified appraiser, pass a HUD test on FHA appraisal methods and reporting, and you must not be listed on:

(i) The General Services Administration's Suspension and Debarment List;

(ii) HUD's Limited Denial of Participation List; or

(iii) HUD's Credit Alert Interactive Voice Response System.

(d) *Removal from the Appraiser Roster.* HUD officials, as designated by the Secretary, may at any time remove a listed appraiser from the Appraiser Roster for cause under the provisions of this section. The provisions of this section apply only to removal actions taken under this section. These provisions do not apply to removal actions taken under any section in 24 CFR part 24 nor to any other remedy against an appraiser available to HUD by statute or otherwise.

(1) *Cause for removal.* Cause for removal under the provisions of this section include, but are not limited to:

(i) Significant deficiencies in appraisals;

(ii) Failure to maintain standing as a state-certified or state-licensed appraiser;

(iii) Prosecution for committing, attempting to commit, or conspiring to commit fraud, misrepresentation, or any other offense that may reflect on the appraiser's character or integrity;

(iv) Failure to perform appraisal functions in accordance with instructions and standards issued by HUD;

(v) Failure to comply with any agreement made between the appraiser and HUD or with any certification made by the appraiser;

(vi) Being issued a final debarment, suspension, or limited denial of participation;

(vii) Failure to maintain eligibility requirements for placement on the Appraiser Roster as set forth under this section or any other instructions or standards issued by HUD; or

(viii) Failure to comply with HUD-imposed education sanctions within the specified period for complying with such education sanctions.

(2) *Procedure for removal.* If you are a listed appraiser and HUD decides to remove you for cause from the Appraiser Roster under the provisions of this section, the following procedure applies to you unless you have been issued a final debarment, suspension, or limited denial of participation:

(i) You will be given written notice of your proposed removal. The notice will include the reasons for your proposed removal and the duration of your proposed removal.

(ii) You will have 20 days from the date of your notice of proposed removal to submit a written response appealing the proposed removal and to request a conference. A request for a conference must be in writing and must be submitted along with a written response.

(iii) Within 30 days of receiving your written response, or if you have requested a conference, within 30 days after the completion of your conference, a HUD official, designated by the Secretary, will review your appeal and will send you a final decision either affirming, modifying, or canceling your removal from the Appraiser Roster. HUD may extend this time upon giving you notice. The HUD official designated by the Secretary to review your appeal will not be someone involved in HUD's initial removal decision nor will it be someone who reports to a person involved in that initial decision.

(iv) If you do not submit a written response, your removal will be effective 20 days after the date of HUD's initial removal notice. If you submit a written response, and the removal decision is affirmed or modified, your removal or modification will be effective on the date of HUD's notice affirming or modifying the initial removal decision.

(3) *Automatic removal for issuance of final debarment, suspension, or limited denial of participation.* If you are a listed appraiser and you have been issued either a final debarment, suspension, or limited denial of participation, you will be automatically removed from the Appraiser Roster. The provisions of this section do not apply to you, and you may not appeal the removal action under the provisions of this section.

(e) *Compliance with HUD-issued instructions and standards.* All appraisers listed on the Appraiser Roster are responsible for obtaining and complying with the HUD Appraiser Handbook (4150.2) (and any updates to the handbook) and all other instructions and standards issued by HUD. The handbook can be obtained through the HUD Web Page (http://www.hud.gov/reac/reasfappr.html).

(f) *Education sanctions.* Where there is evidence that an appraiser is deficient in FHA appraisal requirements, HUD may require an appraiser to undergo professional training and retake the HUD test on FHA appraisal methods and reporting.

(g) *Re-application.* Appraisers removed from the Roster must re-apply to HUD in accordance with instructions provided by HUD.

(h) *Other action.* Nothing in this section prohibits HUD from taking such other action, against an appraiser, as provided under 24 CFR part 24, or from seeking any other remedy against an appraiser available to HUD by statute or otherwise.

Dated: June 10, 1999.

William C. Apgar,

Assistant Secretary for Housing-Federal Housing Commissioner.

[FR Doc. 99–16846 Filed 7–1–99; 8:45 am]

BILLING CODE 4210–27–P

federal register

Friday
July 2, 1999

Part VII

Department of Defense

General Services Administration

National Aeronautics and Space Administration

48 CFR Part 1 et al.

Federal Acquisition Regulation; Reform of Affirmative Action in Federal Procurement and Small Entity Compliance Guide; Final Rules

DEPARTMENT OF DEFENSE

GENERAL SERVICES ADMINISTRATION

NATIONAL AERONAUTICS AND SPACE ADMINISTRATION

48 CFR Parts 1, 12, 14, 15, 19, 26, 33, 52, and 53

[FAC 97–13; FAR Case 97–004]

RIN 9000–AH59

Federal Acquisition Regulation; Reform of Affirmative Action in Federal Procurement

AGENCIES: Department of Defense (DoD), General Services Administration (GSA), and National Aeronautics and Space Administration (NASA).

ACTION: Final rule.

SUMMARY: The Civilian Agency Acquisition Council and the Defense Acquisition Regulations Council (the Councils) have agreed to adopt the interim rules published in the **Federal Register** at 63 FR 35719, June 30, 1998; 63 FR 36120, July 1, 1998; 63 FR 52426, September 30, 1998; and 63 FR 71721, December 29, 1998, as final rules with changes. These amendments conform to a Department of Justice (DoJ) model for reform of affirmative action in Federal procurement. DoJ's proposal is designed to ensure compliance with the constitutional standards established by the Supreme Court in *Adarand Constructors, Inc.* v. *Pena,* 115 S. Ct. 2097 (1995).

DATES: *Effective Date:* October 1, 1999.

Applicability Date: The policies, provisions, and clauses of this final rule are effective for all solicitations issued on or after October 1, 1999.

FOR FURTHER INFORMATION CONTACT: Ms. Victoria Moss, Procurement Analyst, Federal Acquisition Policy Division, General Services Administration, at (202) 501–4764, or Mr. Charles Zuckerman, Office of the Director of Defense Procurement, Department of Defense, at (703) 697–0895. For general information, contact the FAR Secretariat, Room 4035, GS Building, Washington, DC, 20405, (202) 501–4755. Please cite FAC 97–13, FAR case 97–004.

SUPPLEMENTARY INFORMATION:

A. Background

DoD, GSA, and NASA issued the following Federal Acquisition Circulars (FACs) to make amendments to the FAR concerning programs for small disadvantaged business concerns:

FAC 97–06, 63 FR 35719, June 30, 1998
FAC 97–07, 63 FR 36120, July 1, 1998
FAC 97–08, 63 FR 52426, September 30, 1998
FAC 97–07 Addendum, 63 FR 71721, December 29, 1998

These amendments conformed to the DoJ model for reform of affirmative action in Federal procurement. This rule revises and finalizes the above interim rules. The Councils received twenty-four letters containing 63 comments in response to the interim rules and considered them in the formulation of this final rule. The Councils made only one significant change to the rule, as follows:

FAC 97–07 Addendum amended the FAR to allow contractors acting in good faith to rely upon the self-representations of their subcontractors as to their status as small disadvantaged business concerns. The change provided an additional period of time for subcontractors to become certified under rules issued by the Small Business Administration. That time period is being extended to September 30, 1999. Accordingly, this final rule, which becomes effective on October 1, 1999, rescinds the change made by FAC 97–07 Addendum.

Also, the Councils made several clarifying amendments in this final rule, including removing all references to a list of SDBs to be maintained by the Small Business Administration and referring instead to SBA's PRO-Net database.

This rule was subject to Office of Management and Budget review under Section 6(b) of Executive Order 12866, Regulatory Planning and Review, dated September 30, 1993. This is a major rule under 5 U.S.C. 804.

B. Regulatory Flexibility Act

The changes may have a significant economic impact on a substantial number of small entities within the meaning of the Regulatory Flexibility Act, 5 U.S.C. 601 *et seq.*, because the rule provides preferences through which the Government may provide small business concerns benefits in Federal contracting. The Final Regulatory Flexibility Analysis (FRFA) is summarized as follows:

In *Adarand Constructors, Inc.* v. *Pena,* 115 S. Ct. 2097 (1995), the Supreme Court extended strict judicial scrutiny to Federal affirmative action programs that use racial or ethnic criteria as a basis for decision-making. Following the decision, the Department of Justice (DoJ) published, at 61 FR 26042 (May 23, 1996), Proposed Reforms to Affirmative Action in Federal Procurement. This DoJ model was implemented in several parts: Small Business Administration (SBA) regulations; publication of the Department of Commerce price evaluation adjustments for use in Federal procurements; and interim FAR rules.

Four interim FAR rules established in the FAR three procurement mechanisms benefiting small disadvantaged businesses (SDBs). The first mechanism is a price evaluation adjustment of up to 10 percent in certain two-digit Standard Industrial Classification (SIC) Major Groups. The second mechanism is a source selection evaluation factor or subfactor for planned SDB participation in the performance of a contract. The third mechanism provides for a monetary incentive for subcontracting with SDBs.

We received one public comment that specifically addressed the Initial Regulatory Flexibility Analysis. That comment provided that the rule imposes a complicated tracking system and will not increase opportunities for small disadvantaged businesses. We made no changes to the rule based on this comment. While we recognize that the rule calls for more detailed reporting of SDB subcontractors in order to comply with the DoJ proposal, no alternatives to that reporting exist. The commenter provided no evidence to support the commenter's opinion that this rule will not increase opportunities for small disadvantaged businesses. It is our opinion that, to the contrary, this rule will increase opportunities for such firms, particularly in the award of prime contracts by civilian agencies that, unlike DoD, have not previously granted procurement preferences to SDBs.

The FAR Secretariat has submitted a copy of the FRFA to the Chief Counsel for Advocacy of the Small Business Administration. Interested parties may obtain a copy from the FAR Secretariat. The Council will consider comments from small entities concerning the affected FAR subpart in accordance with 5 U.S.C. 610. Interested parties must submit such comments separately and should cite 5 U.S.C 601, *et seq.* (FAC 97–13, FAR Case 97–004), in correspondence.

C. Paperwork Reduction Act

The Paperwork Reduction Act (Pub. L. 104–13) applies because the rules being converted to a final rule contain reporting and recordkeeping requirements. OMB approved the information collections under OMB clearance numbers 9000–0007 through June 30, 2000, and 9000–0150 through June 30, 2000. This final rule does not affect those previously approved information collection requirements.

List of Subjects in 48 CFR Parts 1, 12, 14, 15, 19, 26, 33, 52, and 53

Government procurement.

Dated: June 25, 1999.

Edward C. Loeb,

Director, Federal Acquisition Policy Division.

Federal Acquisition Circular

Federal Acquisition Circular (FAC) 97–13 is issued under the authority of the Secretary of Defense, the Administrator of General Services, and the Administrator for the National Aeronautics and Space Administration.

The policies, provisions and clauses of this final rule are effective for all solicitations issued on or after October 1, 1999.

Eleanor R. Spector,

Director, Defense Procurement.

Dated: June 15, 1999

Ida M. Ustad,

Deputy Associate Administrator, Office of Acquisition Policy, General Services Administration.

June 16, 1999.

Tom Luedtke,

Associate Administrator for Procurement, National Aeronautics and Space Administration.

June 11, 1999.

Interim Rules Adopted as Final With Changes

Accordingly, DoD, GSA, and NASA adopt the interim rules amending 48 CFR parts 1, 12, 14, 15, 19, 26, 33, 52, and 53, which were published at 63 FR 35719, June 30, 1998; 63 FR 36120, July 1, 1998; 63 FR 52426, September 30, 1998; and 63 FR 71721, December 29, 1998, as final with the following changes:

1. The authority citation for 48 CFR parts 1, 12, 14, 15, 19, 26, 33, 52, and 53 continues to read as follows:

Authority: 40 U.S.C. 486(c); 10 U.S.C. chapter 137; and 42 U.S.C. 2473(c).

PART 19—SMALL BUSINESS PROGRAMS

2. Amend section 19.001 to revise the definition ''Small disadvantaged business concern'' to read as follows:

19.001 Definitions.

* * * * *

Small disadvantaged business concern, as used in this part (except for 52.212–3(c)(2) and 52.219–1(b)(2) for general statistical purposes and 52.212–3(c)(7)(ii), 52.219–22(b)(2), and 52.219–23(a) for joint ventures under the price evaluation adjustment for small disadvantaged business concerns), means an offeror that represents, as part of its offer, that it is a small business under the size standard applicable to the acquisition; and either—

(1) It has received certification as a small disadvantaged business concern consistent with 13 CFR part 124, subpart B; and

(i) No material change in disadvantaged ownership and control has occurred since its certification;

(ii) Where the concern is owned by one or more disadvantaged individuals, the net worth of each individual upon whom the certification is based does not exceed $750,000 after taking into account the applicable exclusions set forth at 13 CFR 124.104(c)(2); and

(iii) It is identified, on the date of its representation, as a certified small disadvantaged business (SDB) concern in the database maintained by the Small Business Administration (PRO-Net); or

(2) For a prime contractor, it has submitted a completed application to the Small Business Administration or a private certifier to be certified as a small disadvantaged business concern in accordance with 13 CFR part 124, subpart B, and a decision on that application is pending, and that no material change in disadvantaged ownership and control has occurred since it submitted its application. In this case, a contractor must receive certification as an SDB by the SBA prior to contract award.

* * * * *

3. Amend section 19.304 to revise paragraph (c)(1) to read as follows:

19.304 Disadvantaged business status.

* * * * *

(c) * * *

(1) If the apparently successful offeror has represented that it is currently certified as an SDB, the contracting officer may confirm that the concern is identified as a small disadvantaged business concern by accessing SBA's database (PRO-Net) or by contacting the SBA's Office of Small Disadvantaged Business Certification and Eligibility.

* * * * *

4. Amend section 19.703 to add two new sentences after the first sentence of paragraph (b) to read as follows:

19.703 Eligibility requirements for participating in the program.

* * * * *

(b) * * * The clause at 52.219–25, Small Disadvantaged Business Participation Program—Disadvantaged Status and Reporting, requires the contractor to obtain representations of small disadvantaged status from subcontractors through use of a provision substantially the same as paragraph (b)(1)(i) of the provision at 52.219–22, Small Disadvantaged Business Status. The clause requires the contractor to confirm that a subcontractor representing itself as a small disadvantaged business concern is identified by SBA as a small disadvantaged business concern by accessing SBA's database (PRO-Net) or by contacting the SBA's Office of Small Disadvantaged Business Certification and Eligibility. * * *

5. Revise section 19.1102 to read as follows:

19.1102 Applicability.

(a) Use the price evaluation adjustment in competitive acquisitions in the authorized SIC Major Groups.

(b) Do not use the price evaluation adjustment in acquisitions—

(1) That are less than or equal to the simplified acquisition threshold;

(2) That are awarded pursuant to the 8(a) Program;

(3) That are set aside for small business concerns;

(4) That are set aside for HUBZone small business concerns;

(5) Where price is not a selection factor so that a price evaluation adjustment would not be considered (*e.g.*, architect/engineer acquisitions); or

(6) Where all fair and reasonable offers are accepted (*e.g.*, the award of multiple award schedule contracts).

6. Amend section 19.1103 to revise paragraphs (a)(2), (a)(3), (a)(4), (a)(5), and (b) to read as follows:

19.1103 Procedures.

(a) * * *

(2) An otherwise successful offer of eligible products under the Trade Agreements Act when the acquisition equals or exceeds the dollar threshold in 25.402;

(3) An otherwise successful offer where application of the factor would be inconsistent with a Memorandum of Understanding or other international agreement with a foreign government;

(4) For DoD, NASA, and Coast Guard acquisitions, an otherwise successful offer from a historically black college or university or minority institution; or

(5) For DoD acquisitions, an otherwise successful offer of qualifying country end products (see DFARS 225.000–70 and 252.225–7001).

(b) Apply the factor to a line item or a group of line items on which award may be made. Add other evaluation factors such as transportation costs or rent-free use of Government facilities to the offers before applying the price evaluation adjustment.

* * * * *

7. Amend section 19.1104 to revise the heading and the first sentence to read as follows:

19.1104 Contract clause.

Insert the clause at 52.219–23, Notice of Price Evaluation Adjustment for

Small Disadvantaged Business Concerns, in solicitations and contracts when the circumstances in 19.1101 and 19.1102 apply. * * *

8. Amend section 19.1202–3 to revise the introductory text to read as follows:

19.1202–3 Considerations in developing an evaluation factor or subfactor.

In developing an SDB participation evaluation factor or subfactor for the solicitation, agencies may consider

* * * * *

19.1202–4 [Amended]

9. In section 19.1202–4, remove paragraph (c).

PART 26—OTHER SOCIOECONOMIC PROGRAMS

10. Revise section 26.304 to read as follows:

26.304 Solicitation provision.

Insert the provision at 52.226–2, Historically Black College or University and Minority Institution Representation, in solicitations exceeding the micro-purchase threshold, for research, studies, supplies, or services of the type normally acquired from higher educational institutions. For DoD, NASA, and Coast Guard acquisitions, also insert the provision in solicitations that contain the clause at 52.219–23, Notice of Price Evaluation Adjustment for Small Disadvantaged Business Concerns.

PART 52—SOLICITATION PROVISIONS AND CONTRACT CLAUSES

11. Amend section 52.212–3 to revise the date of the provision and paragraph (c)(7)(i)(A) to read as follows:

52.212–3 Offeror Representations and Certifications—Commercial Items.

* * * * *

Offeror Representations and Certifications—Commercial Items (Oct 1999)

* * * * *

(c) * * *

(7) * * *

(i) * * *

(A) It /__/ is, /__/ is not certified by the Small Business Administration as a small disadvantaged business concern and identified, on the date of this representation, as a certified small disadvantaged business concern in the database maintained by the Small Business Administration (PRO-Net), and that no material change in disadvantaged ownership and control has occurred since its certification, and, where the concern is owned by one or more individuals claiming disadvantaged status, the net worth of each individual upon whom the certification is based does not exceed $750,000 after taking into account the applicable exclusions set forth at 13 CFR 124.104(c)(2); or

* * * * *

12. Amend section 52.219–8 to revise the date of the clause and paragraph (c)(3) to read as follows:

52.219–8 Utilization of Small Business Concerns.

* * * * *

Utilization of Small Business Concerns (Oct 1999)

* * * * *

(c) * * *

(3) *Small business concern owned and controlled by socially and economically disadvantaged individuals* and *small disadvantaged business concern* mean a small business concern that represents, as part of its offer that—

(i) It has received certification as a small disadvantaged business concern consistent with 13 CFR 124, Subpart B;

(ii) No material change in disadvantaged ownership and control has occurred since its certification;

(iii) Where the concern is owned by one or more individuals, the net worth of each individual upon whom the certification is based does not exceed $750,000 after taking into account the applicable exclusions set forth at 13 CFR 124.104(c)(2); and

(iv) It is identified, on the date of its representation, as a certified small disadvantaged business in the database maintained by the Small Business Administration (PRO-Net).

* * * * *

13. Amend section 52.219–9 to revise the date of the clause and paragraph (d)(5) to read as follows:

52.219–9 Small Business Subcontracting Plan.

* * * * *

SMALL BUSINESS SUBCONTRACTING PLAN (OCT 1999)

* * * * *

(d) * * *

(5) A description of the method used to identify potential sources for solicitation purposes (*e.g.*, existing company source lists, the Procurement Marketing and Access Network (PRO-Net) of the Small Business Administration (SBA), the National Minority Purchasing Council Vendor Information Service, the Research and Information Division of the Minority Business Development Agency in the Department of Commerce, or small, HUBZone, small disadvantaged, and women-owned small business trade associations). A firm may rely on the information contained in PRO-Net as an accurate representation of a concern's size and ownership characteristics for the purposes of maintaining a small, HUBZone, small disadvantaged and women-owned small business source list. Use of PRO-Net as its source list does not relieve a firm of its responsibilities (*e.g.*, outreach, assistance, counseling, or publicizing subcontracting opportunities) in this clause.

* * * * *

14. Amend section 52.219–22 to revise the date of the provision and paragraph (b)(1)(i)(C) to read as follows:

52.219–22 Small Disadvantaged Business Status.

* * * * *

SMALL DISADVANTAGED BUSINESS STATUS (OCT 1999)

* * * * *

(b) * * *

(1) * * *

(i) * * *

(C) It is identified, on the date of its representation, as a certified small disadvantaged business concern in the database maintained by the Small Business Administration (PRO-Net); or

* * * * *

15. Amend section 52.219–23 to revise the date of the clause and paragraphs (a)(1)(iii) and (b) to read as follows:

52.219–23 Notice of Price Evaluation Adjustment for Small Disadvantaged Business Concerns.

* * * * *

NOTICE OF PRICE EVALUATION ADJUSTMENT FOR SMALL DISADVANTAGED BUSINESS CONCERNS (OCT 1999)

(a) * * *

(1) * * *

(iii) It is identified, on the date of its representation, as a certified small disadvantaged business concern in the database maintained by the Small Business Administration (PRO-Net).

* * * * *

(b) *Evaluation adjustment.* (1) The Contracting Officer will evaluate offers by adding a factor of _____ [*Contracting Officer insert the percentage*] percent to the price of all offers, except—

(i) Offers from small disadvantaged business concerns that have not waived the adjustment;

(ii) An otherwise successful offer of eligible products under the Trade Agreements Act when the dollar threshold for application of the Act is equaled or exceeded (see section 25.402 of the Federal Acquisition Regulation (FAR));

(iii) An otherwise successful offer where application of the factor would be inconsistent with a Memorandum of Understanding or other international agreement with a foreign government;

(iv) For DoD, NASA, and Coast Guard acquisitions, an otherwise successful offer from a historically black college or university or minority institution; and

(v) For DoD acquisitions, an otherwise successful offer of qualifying country end products (see sections 225.000–70 and 252.225–7001 of the Defense FAR Supplement).

(2) The Contracting Officer will apply the factor to a line item or a group of line items on which award may be made. The Contracting Officer will apply other evaluation factors described in the solicitation before application of the factor.

The factor may not be applied if using the adjustment would cause the contract award to be made at a price that exceeds the fair market price by more than the factor in paragraph (b)(1) of this clause.

* * * * *

16. Amend section 52.219–25 to revise the date of the clause and paragraph (a) to read as follows:

52.219–25 Small Disadvantaged Business Participation Program—Disadvantaged Status and Reporting.

* * * * *

SMALL DISADVANTAGED BUSINESS PARTICIPATION PROGRAM—DISADVANTAGED STATUS AND REPORTING (OCT 1999)

(a) *Disadvantaged status for joint venture partners, team members, and subcontractors.* This clause addresses disadvantaged status for joint venture partners, teaming arrangement members, and subcontractors and is applicable if this contract contains small disadvantaged business (SDB) participation targets. The Contractor shall obtain representations of small disadvantaged status from joint venture partners, teaming arrangement members, and subcontractors through use of a provision substantially the same as paragraph (b)(1)(i) of the provision at FAR 52.219–22, Small Disadvantaged Business Status. The Contractor shall confirm that a joint venture partner, team member, or subcontractor representing itself as a small disadvantaged business concern, is identified as a certified small disadvantaged business in the database maintained by the Small Business Administration (PRO-Net) or by contacting the SBA's Office of Small Disadvantaged Business Certification and Eligibility.

* * * * *

[FR Doc. 99–16855 Filed 7–1–99; 8:45 am]

BILLING CODE 6820–EP–P

DEPARTMENT OF DEFENSE

General Services Administration National Aeronautics and Space Administration

48 CFR Chapter 1

Federal Acquisition Regulation; Small Entity Compliance Guide

AGENCIES: Department of Defense (DoD), General Services Administration (GSA), and National Aeronautics and Space Administration (NASA).

ACTION: Small entity compliance guide.

SUMMARY: This document is issued under the joint authority of the Secretary of Defense, the Administrator of General Services and the Administrator for the National Aeronautics and Space Administration. This *Small Entity Compliance Guide* has been prepared in accordance with Section 212 of the Small Business Regulatory Enforcement Fairness Act of 1996 (Public Law 104–121). It consists of a summary of the rule appearing in Federal Acquisition Circular (FAC) 97–13 which amends the Federal Acquisition Regulation (FAR). A Final Regulatory Flexibility Analysis (FRFA) has been prepared in accordance with 5 U.S.C. 604. Interested parties may obtain a copy of the FRFA from the FAR Secretariat. In addition, interested parties may obtain further information regarding this rule by referring to FAC 97–13, which precedes this document. This document is also available via the Internet at http://www.arnet.gov/far.

FOR FURTHER INFORMATION CONTACT: Laurie Duarte, FAR Secretariat, at (202) 501–4225. For clarification of content, contact Victoria Moss, Procurement Analyst, General Services Administration, at (202) 501–4764.

Reform of Affirmative Action in Federal Procurement

FAC 97–13, FAR Case 97–004. FAR Parts 19, 26, and 52 are amended to rescind the changes made in FAC 97–07 Addendum and finalize interim rules published in FACs 97–06, 97–07, and 97–08. These rules establish in the FAR three procurement mechanisms benefiting small disadvantaged businesses (SDBs). The first mechanism is a price evaluation adjustment of up to ten percent in certain two-digit Standard Industrial Classification (SIC) Major Groups. The second mechanism is a source selection evaluation factor or subfactor for planned SDB participation in the performance of a contract. The third mechanism provides for a monetary incentive for subcontracting with SDBs.

Dated: June 25, 1999.

Edward C. Loeb,

Director, Federal Acquisition Policy Division.

[FR Doc. 99–16856 Filed 7–1–99; 8:45 am]

BILLING CODE 6820–EP–P

federal register

Friday
July 2, 1999

Part VIII

The President

Proclamation 7206—To Modify Duty-Free Treatment Under the Generalized System of Preferences and for Other Purposes

Federal Register
Vol. 64, No. 127
Friday, July 2, 1999

Presidential Documents

Title 3—

The President

Proclamation 7206 of June 30, 1999

To Modify Duty-Free Treatment Under the Generalized System of Preferences and for Other Purposes

By the President of the United States of America

A Proclamation

1. Pursuant to section 502 of the Trade Act of 1974, as amended (the ''1974 Act'') (19 U.S.C. 2462), the President may designate countries as beneficiary developing countries and least-developed beneficiary developing countries for purposes of the Generalized System of Preferences (GSP).

2. Pursuant to section 503(c)(2)(A) of the 1974 Act (19 U.S.C. 2463(c)(2)(A)), beneficiary developing countries, except those designated as least-developed beneficiary developing countries, are subject to competitive need limitations on the preferential treatment afforded under the GSP to eligible articles.

3. Pursuant to section 503(c)(2)(C) of the 1974 Act (19 U.S.C. 2463(c)(2)(C)), a country that is no longer treated as a beneficiary developing country with respect to an eligible article may be redesignated as a beneficiary developing country with respect to such article if imports of such article from such country did not exceed the competitive need limitations in section 503(c)(2)(A) of the 1974 Act (19 U.S.C. 2463(c)(2)(A)) during the preceding calendar year.

4. Pursuant to section 503(c)(2)(F) of the 1974 Act (19 U.S.C. 2463(c)(2)(F)), the President may disregard the competitive need limitation provided in section 503(c)(2)(A)(i)(II) of the 1974 Act (19 U.S.C. 2463(c)(2)(A)(i)(II)) with respect to any eligible article from any beneficiary developing country if the aggregate appraised value of the imports of such article into the United States during the preceding calendar year does not exceed the applicable amount set forth in section 503(c)(2)(F)(ii) of the 1974 Act (19 U.S.C. 2463(c)(2)(F)(ii)).

5. Pursuant to section 503(d) of the 1974 Act (19 U.S.C. 2463(d)), the President may waive the application of the competitive need limitations in section 503(c)(2)(A) of the 1974 Act (19 U.S.C. 2463(c)(2)(A)) with respect to any eligible article of any beneficiary developing country if certain conditions are met.

6. Section 507(2) of the 1974 Act (19 U.S.C. 2467(2)) provides that in the case of an association of countries which is a free trade area or customs union, or which is contributing to comprehensive regional economic integration among its members through appropriate means, including, but not limited to, the reduction of duties, the President may provide that all members of such association other than members which are barred from designation under section 502(b) of the 1974 Act (19 U.S.C. 2462(b)) shall be treated as one country for purposes of title V of the 1974 Act.

7. Pursuant to section 502 of the 1974 Act, and having taken account of the eligibility criteria set forth therein, I have determined that Gabon and Mongolia should be designated as beneficiary developing countries for purposes of the GSP. Further, I have determined that the names of two previously designated beneficiary developing countries should be modified.

8. Pursuant to section 502 of the 1974 Act, and having taken account of the eligibility criteria set forth therein, I have determined that the suspension pursuant to Proclamation 6575 of June 25, 1993, of preferential treatment for Mauritania as a least-developed beneficiary developing country under the GSP should be ended.

9. Pursuant to section 503(c)(2)(A) of the 1974 Act, I have determined that certain beneficiary developing countries should not receive preferential tariff treatment under the GSP with respect to certain eligible articles imported in quantities that exceed the applicable competitive need limitation.

10. Pursuant to section 503(c)(2)(C) of the 1974 Act, I have determined that certain countries should be redesignated as beneficiary developing countries with respect to certain eligible articles that previously had been imported in quantities exceeding the competitive need limitations of section 503(c)(2)(A) of the 1974 Act.

11. Pursuant to section 503(c)(2)(F) of the 1974 Act, I have determined that the competitive need limitation provided in section 503(c)(2)(A)(i)(II) should be waived with respect to certain eligible articles from certain beneficiary developing countries.

12. Pursuant to section 503(d) of the 1974 Act, I have determined that the competitive need limitations of section 503(c)(2)(A) of the 1974 Act should be waived with respect to certain eligible articles from certain beneficiary developing countries. I have received the advice of the International Trade Commission on whether any industries in the United States are likely to be adversely affected by such waivers, and I have determined, based on that advice and on the considerations described in sections 501 and 502(c) of the 1974 Act, that such waivers are in the national economic interest of the United States.

13. Pursuant to section 507(2) of the 1974 Act, I have determined that Cambodia should be added to the list of countries identified in general note 4(a) of the Harmonized Tariff Schedule of the United States (HTS) as members of the Association of South East Asian Nations (ASEAN) that shall be treated as one country for purposes of title V of the 1974 Act.

14. Section 604 of the 1974 Act (19 U.S.C. 2483), authorizes the President to embody in the HTS the substance of the relevant provisions of that Act, and of other acts affecting import treatment, and actions thereunder, including the removal, modification, continuance, or imposition of any rate of duty or other import restriction.

NOW, THEREFORE, I, WILLIAM J. CLINTON, President of the United States of America, acting under the authority vested in me by the Constitution and the laws of the United States of America, including but not limited to title V and section 604 of the 1974 Act, do proclaim that:

(1) In order to provide for the designation of Gabon and Mongolia as beneficiary developing countries under the GSP, and to modify the names of two previously designated beneficiary developing countries, general note 4(a) to the HTS is modified as provided in sections A(1), A(2) and A(3) of Annex I to this proclamation and general note 4(b) to the HTS is modified as provided in section B of Annex I to this proclamation.

(2) In order to provide for the addition of Cambodia to the list of members of ASEAN that shall be treated as one country for purposes of title V of the 1974 Act, general note 4(a) to the HTS is modified as provided in section A(4) of Annex I to this proclamation.

(3) In order to provide for the restoration of preferential treatment for Mauritania as a least-developed beneficiary developing country under the GSP, general note 4(a) to the HTS is modified as provided in section C(1) of Annex I to this proclamation and general note 4(b) to the HTS is modified as provided in section C(2) of Annex I to this proclamation.

(4) In order to provide that certain countries that have not been treated as beneficiary developing countries with respect to one or more eligible articles should be designated as beneficiary developing countries with respect to such article or articles for purposes of the GSP, and that certain countries should not be treated as beneficiary developing countries with respect to one or more eligible articles for purposes of the GSP, general note 4(d) to the HTS is modified as provided in section D of Annex I to this proclamation and the Rates of Duty 1–Special subcolumn for the HTS subheadings enumerated in section E of Annex I to this proclamation is modified as provided in such section.

(5) A waiver of the application of section 503(c)(2)(A) of the 1974 Act shall apply to the eligible articles in the HTS subheadings and to the beneficiary developing countries set forth in Annex II to this proclamation.

(6) Any provisions of previous proclamations and Executive orders that are inconsistent with the actions taken in this proclamation are superseded to the extent of such inconsistency.

(7)(a) The modifications to the HTS made by Annex I to this proclamation shall be effective on the dates specified in such annex.

(b) The action taken in Annex II to this proclamation shall be effective on the date of signature of this proclamation.

IN WITNESS WHEREOF, I have hereunto set my hand this thirtieth day of June, in the year of our Lord nineteen hundred and ninety-nine, and of the Independence of the United States of America the two hundred and twenty-third.

William J. Clinton

Billing code 3195–01–P

Annex I

Modifications to the Harmonized Tariff
Schedule of the United States ("HTS")

Section A

Effective with respect to articles entered, or withdrawn from warehouse for consumption, on or after July 1, 1999, general note 4(a) to the HTS is modified by:

(1) deleting "Congo" from the list entitled "Independent Countries" and inserting "Congo (Brazzaville)" in lieu thereof.

(2) deleting "Zaire" from the list entitled "Independent Countries" and inserting in alphabetical order "Congo (Kinshasa)" in lieu thereof.

(3) adding in alphabetical order "Gabon" and "Mongolia" to the list entitled "Independent Countries".

(4) deleting "Members of the Association of South East Asian Nations (ASEAN) Eligible for GSP except Brunei Darussalam, Malaysia and Singapore" and the countries identified as members thereof from the list entitled "Associations of Countries (treated as one country)" and inserting in lieu thereof the following:

"Member Countries of the Association
of South East Asian Nations (ASEAN)

Currently qualifying:

Cambodia
Indonesia
Philippines
Thailand"

Section B

Effective with respect to articles entered, or withdrawn from warehouse for consumption, on or after July 1, 1999, general note 4(b)(i) to the HTS is modified by deleting "Zaire" and inserting in alphabetical order "Congo (Kinshasa)" in lieu thereof.

Section C

Effective with respect to articles entered, or withdrawn from warehouse for consumption, on or after September 1, 1999:

(1) general note 4(a) to the HTS is modified by adding in alphabetical order "Mauritania" to the list entitled "Independent Countries".

(2) general note 4(b)(i) to the HTS is modified by adding in alphabetical order "Mauritania".

Section D

Effective with respect to articles entered, or withdrawn from warehouse for consumption, on or after July 1, 1999, general note 4(d) to the Harmonized Tariff Schedule of the United States ("HTS") is modified by:

(1) deleting the following subheadings and the country set out opposite such subheadings:

1604.15.00 Chile
7403.13.00 Chile
7403.19.00 Chile
8708.39.50 Brazil

(2) deleting the country set out opposite the following subheadings:

2825.30.00 South Africa
2841.90.10 South Africa
2907.29.25 South Africa
2909.50.40 Indonesia
3817.10.50 Indonesia
8531.20.00 Philippines

(3) adding, in numerical sequence, the following provisions and countries set out opposite them:

0712.90.30 Peru
0713.33.20 El Salvador
0713.90.60 India
0714.20.10 Dominican Republic
0802.31.00 India
0805.90.00 Turkey
0904.20.76 India
0910.10.40 India
1702.30.22 Argentina
1703.90.50 Poland
1806.10.22 Colombia
1806.20.22 Turkey
2005.10.00 Turkey
2008.19.30 Pakistan
2106.90.52 El Salvador
2607.00.00 Peru
3920.63.20 India
5904.92.00 Guatemala
6814.90.00 India
7113.20.29 India
7114.19.00 Peru
7801.99.30 Dominican Republic
8517.19.80 Indonesia
8517.90.24 Costa Rica
8540.12.10 India

(4) adding, in alphabetical order, the country or countries set out opposite the following subheadings:

0710.29.30 Dominican Republic	3501.90.20 Dominican Republic
1604.14.50 Colombia	4412.92.50 Guyana
1701.91.05 India	7115.90.30 Colombia
1702.90.40 Brazil	7403.12.00 Russia

Section E

Effective with respect to articles entered, or withdrawn from warehouse for consumption, on or after July 1, 1999, each enumerated article's preferential tariff treatment under the Generalized System of Preferences ("GSP") in the HTS is modified as provided in this section.

(1) For the following subheadings, the Rates of Duty 1-Special subcolumn is modified by deleting the symbol "A*" and inserting an "A" in lieu thereof.

1604.15.00	7403.19.00
7403.13.00	8708.39.50

(2) For the following provisions, the Rates of Duty 1-Special subcolumn is modified by deleting the symbol "A" and inserting an "A*" in lieu thereof:

0712.90.30	0805.90.00	1806.10.22	2607.00.00	7114.19.00
0713.33.20	0904.20.76	1806.20.22	3920.63.20	7801.99.30
0713.90.60	0910.10.40	2005.10.00	5904.92.00	8517.19.80
0714.20.10	1702.30.22	2008.19.30	6814.90.00	8517.90.24
0802.31.00	1703.90.50	2106.90.52	7113.20.29	8540.12.10

Annex II

Harmonized Tariff Schedule of the United States ("HTS") Subheadings and Countries Granted Waivers of the Application of Section 503(c)(2)(A) of the 1974 Act

HTS Subheading	Country
2841.70.10	Chile
2916.31.15	Estonia
7403.13.00	Chile
7403.19.00	Chile
7418.19.20	India
8483.10.30	Brazil
8527.39.00	Indonesia
8531.20.00	Philippines
8708.39.50	Brazil

[FR Doc. 99–17145
Filed 7–1–99; 11:31 am]
Billing code 3190–01–C

Reader Aids

Federal Register

Vol. 64, No. 127

Friday, July 2, 1999

CUSTOMER SERVICE AND INFORMATION

Federal Register/Code of Federal Regulations

General Information, indexes and other finding aids	**202–523–5227**
Laws	**523–5227**

Presidential Documents

Executive orders and proclamations	**523–5227**
The United States Government Manual	**523–5227**

Other Services

Electronic and on-line services (voice)	**523–4534**
Privacy Act Compilation	**523–3187**
Public Laws Update Service (numbers, dates, etc.)	**523–6641**
TTY for the deaf-and-hard-of-hearing	**523–5229**

ELECTRONIC RESEARCH

World Wide Web

Full text of the daily Federal Register, CFR and other publications:

http://www.access.gpo.gov/nara

Federal Register information and research tools, including Public Inspection List, indexes, and links to GPO Access:

http://www.nara.gov/fedreg

E-mail

PENS (Public Law Electronic Notification Service) is an E-mail service for notification of recently enacted Public Laws. To subscribe, send E-mail to

listserv@www.gsa.gov

with the text message:

subscribe PUBLAWS-L your name

Use listserv@www.gsa.gov only to subscribe or unsubscribe to PENS. We cannot respond to specific inquiries.

Reference questions. Send questions and comments about the Federal Register system to:

info@fedreg.nara.gov

The Federal Register staff cannot interpret specific documents or regulations.

FEDERAL REGISTER PAGES AND DATES, JULY

35559–35920 1
35921–36236 2

CFR PARTS AFFECTED DURING JULY

At the end of each month, the Office of the Federal Register publishes separately a List of CFR Sections Affected (LSA), which lists parts and sections affected by documents published since the revision date of each title.

3 CFR

Proclamations:
6575 (See Proc. 7206) 36229
7206 36229
Administrative Orders:
Presidential Determination:
No. 99–30 of June 23, 1999 35921

5 CFR

Proposed Rules:
1204 35952
1205 35957

7 CFR

1477 35559

10 CFR

Proposed Rules:
810 35959

14 CFR

39 35559
97 ..... 35562, 35564
Proposed Rules:
21 35902
27 35902
29 35902
91 35902
93 35963

16 CFR

Proposed Rules:
453 35965

18 CFR

430 35566

21 CFR

556 35923
558 35923
1020 35924
1308 35928
1312 35928
Proposed Rules:
510 35966
514 35966
558 35966

23 CFR

1225 35568

24 CFR

291 36210
Proposed Rules:
200 36216

26 CFR

1 ..... 35573, 36092, 36116, 36175
301 36092
602 ..... 36092, 36116, 36175
Proposed Rules:
1 35579

29 CFR

Proposed Rules:
1908 35972

31 CFR

Ch. V 35575

36 CFR

242 ..... 35776, 35821

40 CFR

51 35714
52 ..... 35577, 35930, 35941

42 CFR

482 36070

47 CFR

1 35832
73 35941
76 35948

48 CFR

Ch. 1 36222
1 36222
12 36222
14 36222
15 36222
19 36222
26 36222
33 36222
52 36222
53 36222

49 CFR

Proposed Rules:
192 35580

50 CFR

100 ..... 35776, 35821
Proposed Rules:
622 35981
648 35984

REMINDERS

The items in this list were editorially compiled as an aid to Federal Register users. Inclusion or exclusion from this list has no legal significance.

RULES GOING INTO EFFECT JULY 2, 1999

AGRICULTURE DEPARTMENT

Animal and Plant Health Inspection Service

Exportation and importation of animals and animal products:

Ports of entry—

New Jersey and New York; ports designated for exportation of horses; published 6-4-99

ENVIRONMENTAL PROTECTION AGENCY

Air quality implementation plans; approval and promulgation; various States:

Nevada; published 6-2-99

FEDERAL COMMUNICATIONS COMMISSION

Television broadcasting:

Cable television systems—

Navigation devices; commercial availability; published 6-2-99

HEALTH AND HUMAN SERVICES DEPARTMENT

Food and Drug Administration

Animal drugs, feeds, and related products:

Diclazuril; published 7-2-99

HOUSING AND URBAN DEVELOPMENT DEPARTMENT

Mortgage and loan insurance programs:

Single family mortgage insurance—

Informed consumer choice disclosure notice; correction; published 6-30-99

Single family mortgage insurance; published 6-2-99

JUSTICE DEPARTMENT

Drug Enforcement Administration

Schedules of controlled subtances:

Synthetic dronabinol, etc.; published 7-2-99

TRANSPORTATION DEPARTMENT

Coast Guard

Ports and waterways safety:

Bayley Beach, CT; safety zone; published 6-28-99

TRANSPORTATION DEPARTMENT

Federal Aviation Administration

Airworthiness directives:

Bell; published 6-17-99

Boeing; published 5-28-99

Eurocopter France; published 6-17-99¶

RULES GOING INTO EFFECT JULY 3, 1999

TRANSPORTATION DEPARTMENT

Coast Guard

Ports and waterways safety:

Great South Bay, NY; safety zone; published 5-24-99

Regattas and marine parades:

Ohio River 4th of July Celebration; published 6-28-99¶

RULES GOING INTO EFFECT JULY 4, 1999

COMMERCE DEPARTMENT

National Oceanic and Atmospheric Administration

Fishery conservation and management:

Alaska; fisheries of Exclusive Economic Zone—

Shallow-water species; published 6-30-99

TRANSPORTATION DEPARTMENT

Coast Guard

Regattas and marine parades:

Harbour Town Fireworks Display; published 6-28-99

Skull Creek July 4th Celebration Fireworks Display; published 6-23-99¶

RULES GOING INTO EFFECT JULY 5, 1999

TRANSPORTATION DEPARTMENT

Federal Aviation Administration

Airworthiness directives:

Industrie Aeronautiche e Meccaniche; published 5-21-99

COMMENTS DUE NEXT WEEK

AGRICULTURE DEPARTMENT

Agricultural Marketing Service

Melons grown in—

Texas; comments due by 7-6-99; published 5-4-99

AGRICULTURE DEPARTMENT

Animal and Plant Health Inspection Service

Aquaculture:

Farm-raised fin fish; comments due by 7-6-99; published 5-4-99

COMMERCE DEPARTMENT

International Trade Administration

Antidumping and countervailing duties:

Antidumping duty orders; revocation; comments due by 7-6-99; published 6-3-99

COMMERCE DEPARTMENT

National Oceanic and Atmospheric Administration

Endangered and threatened species:

Critical habitat designation—

Oregon coast coho salmon; comments due by 7-9-99; published 5-10-99

West Coast steelhead; comments due by 7-5-99; published 4-26-99

Southwestern Washington/Columbia River and Umpqua River coastal cutthroat trout in Washington and Oregon; comments due by 7-6-99; published 4-5-99

Fishery conservation and management:

Caribbean, Gulf, and South Atlantic fisheries—

South Atlantic Region fishery management plans; comments due by 7-8-99; published 5-24-99

West Coast States and Western Pacific fisheries—

Northern anchovy; comments due by 7-9-99; published 5-25-99

DEFENSE DEPARTMENT

Acquisition regulations:

Weighted guidelines and performance-based payments; comments due by 7-6-99; published 5-4-99

Federal Acquisition Regulation (FAR):

Review of award fee determinations; comments due by 7-6-99; published 5-6-99

EDUCATION DEPARTMENT

Postsecondary education:

Gaining Early Awareness and Readiness for Undergraduate Programs—

Negotiated rulemaking committee; establishment; comments due by 7-9-99; published 6-30-99

ENERGY DEPARTMENT

Chronic beryllium disease prevention program; comments due by 7-6-99; published 6-3-99

ENVIRONMENTAL PROTECTION AGENCY

Air pollutants, hazardous; national emission standards:

Polymer and resin production facilities (Group IV); comments due by 7-8-99; published 6-8-99

Air programs:

Fuels and fuel additives—

Puerto Rico gasoline; compliance baseline modification; comments due by 7-9-99; published 6-9-99

Puerto Rico gasoline; compliance baseline modification; comments due by 7-9-99; published 6-9-99

Ozone areas attaining 1-hour standard; identification of areas where standard will cease to apply; comments due by 7-9-99; published 6-9-99

Air programs; approval and promulgation; State plans for designated facilities and pollutants:

Florida; comments due by 7-6-99; published 6-4-99

South Dakota; comments due by 7-6-99; published 6-3-99

Air quality implementation plans; approval and promulgation; various States:

Alabama; comments due by 7-6-99; published 6-4-99

California; comments due by 7-6-99; published 6-3-99

Ohio; comments due by 7-8-99; published 6-8-99

Texas; comments due by 7-6-99; published 6-3-99

Air quality planning purposes; designation of areas:

Texas; comments due by 7-6-99; published 6-3-99

Hazardous waste:

Solid waste disposal facilities that receive conditionally exempt small quantity generator hazardous waste; state permit program adequacy;

comments due by 7-8-99; published 6-8-99

Pesticides; tolerances in food, animal feeds, and raw agricultural commodities:

Myclobutanil; comments due by 7-6-99; published 5-6-99

Phosphine; comments due by 7-9-99; published 6-9-99

Superfund program:

National oil and hazardous substances contingency plan—

National priorities list update; comments due by 7-9-99; published 5-10-99

Water programs:

Oil pollution; non-transportation-related facilities prevention and response; comments due by 7-7-99; published 5-18-99

Pollutants analysis test procedures; guidelines—

Mercury; measurement method; comments due by 7-8-99; published 6-8-99

FEDERAL COMMUNICATIONS COMMISSION

Common carrier services:

Truth-in-billing and billing format; common sense principles; comments due by 7-9-99; published 6-25-99

Radio stations; table of assignments:

California; comments due by 7-6-99; published 5-26-99

Illinois; comments due by 7-6-99; published 5-25-99

Nebraska; comments due by 7-6-99; published 5-25-99

Nevada; comments due by 7-6-99; published 5-26-99

New Mexico; comments due by 7-6-99; published 5-25-99

Oregon; comments due by 7-6-99; published 5-25-99

FEDERAL DEPOSIT INSURANCE CORPORATION

Asset and liability backup program; comments due by 7-9-99; published 6-9-99

FEDERAL EMERGENCY MANAGEMENT AGENCY

Flood insurance program:

Insurance coverage and rates—

Insured structures; inspection by communities; comments due by 7-6-99; published 5-5-99

FEDERAL HOUSING FINANCE BOARD

Affordable housing program operation:

Program requirements clarification; comments due by 7-6-99; published 5-5-99

FEDERAL TRADE COMMISSION

Industry guides:

Jewelry, precious metals, and pewter industries; comments due by 7-8-99; published 6-8-99

GENERAL SERVICES ADMINISTRATION

Federal Acquisition Regulation (FAR):

Review of award fee determinations; comments due by 7-6-99; published 5-6-99

HEALTH AND HUMAN SERVICES DEPARTMENT

Food and Drug Administration

Food additives:

Sucrose acetate isobutyrate; comments due by 7-6-99; published 6-4-99

Medical devices:

Sunlamp products performance standard; recommended exposure schedule and health warnings requirements; comments due by 7-9-99; published 5-4-99

HEALTH AND HUMAN SERVICES DEPARTMENT

Health Care Financing Administration

Medicare:

Hospital inpatient prospective payment systems and 2000 FY rates; comments due by 7-6-99; published 5-7-99

HOUSING AND URBAN DEVELOPMENT DEPARTMENT

Low income housing:

Housing assistance payments (Section 8)—

Fair market rent schedules for rental certificate, loan management, property disposition, moderate rehabilitation, rental voucher programs, etc.; comments due by 7-6-99; published 5-7-99

Fair market rent schedules for rental certificate, loan management, property disposition, moderate rehabilitation, rental voucher programs, etc.; correction; comments due by 7-6-99; published 5-20-99

INTERIOR DEPARTMENT

Indian Affairs Bureau

Financial assistance and social services programs; comments due by 7-6-99; published 5-6-99

INTERIOR DEPARTMENT

Fish and Wildlife Service

Endangered and threatened species:

Alabama sturgeon; comments due by 7-5-99; published 5-25-99

Coastal cutthroat trout; comments due by 7-6-99; published 4-5-99

JUSTICE DEPARTMENT

Public Safety Officers' Educational Assistance Program; comments due by 7-9-99; published 5-25-99

JUSTICE DEPARTMENT

Prisons Bureau

Inmate control, custody, care, etc.:

Smoking/no smoking areas; comments due by 7-6-99; published 5-6-99

NATIONAL AERONAUTICS AND SPACE ADMINISTRATION

Federal Acquisition Regulation (FAR):

Review of award fee determinations; comments due by 7-6-99; published 5-6-99

NATIONAL ARCHIVES AND RECORDS ADMINISTRATION

Records management:

Agency records centers; storage standard update

Meeting and comment period extension; comments due by 7-7-99; published 6-7-99

NUCLEAR REGULATORY COMMISSION

Well logging operations; licenses and radiation safety requirements:

Energy compensation sources and other regulatory clarifications; comments due by 7-6-99; published 4-19-99

PERSONNEL MANAGEMENT OFFICE

Employment:

Displaced former Panama Canal Zone employees; interagency career transition assistance; comments due by 7-6-99; published 5-7-99

POSTAL SERVICE

Freedom of Information Act; implementation; comments due by 7-9-99; published 6-9-99

SMALL BUSINESS ADMINISTRATION

Small business size standards:

Accounting, auditing, and bookkeeping services; comments due by 7-6-99; published 6-3-99

Health services agencies; comments due by 7-6-99; published 5-4-99

TRANSPORTATION DEPARTMENT

Coast Guard

Pollution:

Non-petroleum oils; marine transportation-related facilities; response plans; comments due by 7-7-99; published 4-8-99

Ports and waterways safety:

Raritan River, NJ; safety zone; comments due by 7-7-99; published 6-7-99

Regattas and marine parades:

Charleston Harbor Grand Prix; comments due by 7-9-99; published 5-10-99

New Jersey; comments due by 7-9-99; published 5-10-99

TRANSPORTATION DEPARTMENT

Federal Aviation Administration

Air traffic operating and flight rules, etc.:

Terrain awareness and warning system; comments due by 7-9-99; published 5-27-99

Airworthiness directives:

AlliedSignal Inc.; comments due by 7-6-99; published 4-6-99

Bell; comments due by 7-6-99; published 4-7-99

Boeing; comments due by 7-6-99; published 6-11-99

Dassault; comments due by 7-6-99; published 6-4-99

McDonnell Douglas; comments due by 7-6-99; published 4-6-99

Pratt & Whitney; comments due by 7-6-99; published 6-4-99

Raytheon; comments due by 7-6-99; published 5-18-99

Airworthiness standards:

Special conditions—

Bell Helicopter Textron Canada model 427 helicopters; high intensity radiated fields; comments due by 7-6-99; published 5-20-99

Boeing model 767-400ER airplane; sudden engine

stoppage; comments due by 7-6-99; published 5-20-99

Dornier model 328-300 airplane; high intensity radiated fields; comments due by 7-6-99; published 5-20-99

Class D airspace; comments due by 7-7-99; published 6-7-99

Class E airspace; comments due by 7-9-99; published 6-9-99

TRANSPORTATION DEPARTMENT

Federal Highway Administration

Motor carrier safety standards:

Motor carrier qualifications to self-insure operations and fees to support approval and compliance process; comments due by 7-6-99; published 5-5-99

TRANSPORTATION DEPARTMENT

Federal Transit Administration

Major capital investment projects; comments due by 7-6-99; published 4-7-99

TRANSPORTATION DEPARTMENT

National Highway Traffic Safety Administration

Motor vehicle safety standards:

Occupant crash protection—

Seat belt assemblies; comments due by 7-6-99; published 5-19-99

TRANSPORTATION DEPARTMENT

Research and Special Programs Administration

Pipeline safety:

Gas gathering lines, definition; electronic discussion forum; comments due by 7-7-99; published 4-30-99

Pipeline personnel; qualification requirement; environmental assessment; comments due by 7-6-99; published 6-3-99

TREASURY DEPARTMENT

Alcohol, Tobacco and Firearms Bureau

Alcohol; viticultural area designations:

Applegate Valley, OR; comments due by 7-6-99; published 5-6-99

TREASURY DEPARTMENT

Freedom of Information Act; implementation; comments due by 7-6-99; published 5-6-99

VETERANS AFFAIRS DEPARTMENT

Medical benefits:

Patient rights—

Medication prescribing authority; comments due by 7-6-99; published 5-4-99

LIST OF PUBLIC LAWS

This is a continuing list of public bills from the current session of Congress which have become Federal laws. It may be used in conjunction with ''P L U S'' (Public Laws Update Service) on 202–523–6641. This list is also available online at http://www.nara.gov/fedreg.

The text of laws is not published in the **Federal Register** but may be ordered in ''slip law'' (individual pamphlet) form from the Superintendent of Documents, U.S. Government Printing Office, Washington, DC 20402 (phone, 202–512–1808). The text will also be made available on the Internet from GPO Access at http://www.access.gpo.gov/nara/index.html. Some laws may not yet be available.

H.R. 435/P.L. 106–36

Miscellaneous Trade and Technical Corrections Act of 1999 (June 25, 1999; 113 Stat. 127)

Last List June 17, 1999

Public Laws Electronic Notification Service (PENS)

PENS is a free electronic mail notification service of newly enacted public laws. To subscribe, send E-mail to **listserv@www.gsa.gov** with the text message:

SUBSCRIBE PUBLAWS-L Your Name.

Note: This service is strictly for E-mail notification of new public laws. The text of laws is not available through this service. **PENS** cannot respond to specific inquiries sent to this address.

CFR ISSUANCES 1999
January—April 1999 Editions and Projected July, 1999 Editions

This list sets out the CFR issuances for the January–April 1999 editions and projects the publication plans for the **July, 1999** quarter. A projected schedule that will include the **October, 1999** quarter will appear in the first **Federal Register** issue of October.

For pricing information on available 1998–1999 volumes consult the CFR checklist which appears every Monday in the Federal Register.

Pricing information is not available on projected issuances. The weekly CFR checklist and the monthly List of CFR Sections Affected will continue to provide a cumulative list of CFR titles and parts, revision date and price of each volume.

Normally, CFR volumes are revised according to the following schedule:

Titles 1–16—January 1
Titles 17–27—April 1
Titles 28–41—July 1
Titles 42–50—October 1

All volumes listed below will adhere to these scheduled revision dates unless a notation in the listing indicates a different revision date for a particular volume.

Titles revised as of January 1, 1999:

Title

CFR Index
200–End

1–2 (Cover only)

3 (Compilation)

4 (Cover only)

5 Parts:
1–699
700–1199
1200–End

6 [Reserved]

7 Parts:
1–26
27–52
53–209
210–299
300–399
400–699
700–899
900–999
1000–1199
1200–1599
1600–1899
1900–1939
1940–1949
1950–1999
2000–End

8

9 Parts:
1–199

10 Parts:
1–50
51–199
200–499
500–End

11

12 Parts:
1–199
200–219
220–299
300–499
500–599
600–End

13

14 Parts:
1–59
60–139
140–199
200–1199
1200–End

15 Parts:
0–299
300–799
800–End

16 Parts:
0–999
1000–End

Titles revised as of April 1, 1999:

Title

17 Parts:
1–199
200–239
240–End

18 Parts:
1–399
400–End

19 Parts:
1–140
141–199
200–End

20 Parts:
1–399
400–499
500–End (possible cover only)

21 Parts:
1–99
100–169
170–199
200–299
300–499
500–599
600–799
800–1299
1300–End

22 Parts:
1–299
300–End

23

24 Parts:
0–199
200–499
500–699
700–1699
1700–End

25

26 Parts:
1 (§§ 1.0-1–1.60)
1 (§§ 1.61–1.169)
1 (§§ 1.170–1.300)
1 (§§ 1.301–1.400)
1 (§§ 1.401–1.440)
1 (§§ 1.441–1.500)
1 (§§ 1.501–1.640) (possible cover only)
1 (§§ 1.641–1.850)
1 (§§ 1.851–1.907)
1 (§§ 1.908–1.1000)
1 (§§ 1.1001–1.1400)
1 (§ 1.1401–End)
2–29
30–39
40–49
50–299
300–499
500–599
600–End

27 Parts:
1–199
200–End

Projected July 1, 1999 editions:

Title

28 Parts:
0–42
43–End

29 Parts:
0–99
100–499
500–899 (possible cover only)
900–1899
1900–1910.999
1910.1000–End
1911–1925
1926
1927–End

30 Parts:
1–199
200–699
700–End

31 Parts:
0–199
200–End

32 Parts:
1–190
191–399
400–629
630–699
700–799
800–End

33 Parts:
1–124
125–199
200–End

34 Parts:
1–299
300–399
400–End

35 (possible cover only)

36 Parts:
1–199
200–299
300–End

37

38 Parts:
0–17
18–End

39

40 Parts:
1–49
50–51
52 (§ 52.01—52.1018)
52 (§ 52.1019 to end)
53–59
60
61–62
63 (§ 63.1—63.1199)
63 (§ 63.1200—End)
64–71
72–80
81–85
86
87–135
136–149
150–189
190–259
260–265
266–299
300–399
400–424
425–699
700–789
790–End (possible cover only)

41 Parts:
Chs. 1–100
Ch. 101
Chs. 102–200
Ch. 201–End